PARK HILL NUTRITION SERVICES
9501 N Seymour Avenue
Kansas City, MO 64153
816-359-4090

INVITATION TO BID

Please Mark/Indicate Subject as Follows:
ITB # 107-2026-27-003

DATE ISSUED:
Friday, November 20, 2026

BID/PRICE QUOTE DUE:
Friday, December 18, 2026 @ 10:00 AM

DESCRIPTION OF INVITATION TO BID

BID NUMBER: ITB #107-2026-27-003

ITEM: Tall Base Electric High Temperature Door-Style Dishwashing Machine

BID SUBMISSION

Bids must be received by **10:00 AM,** on **Friday, December 18, 2026**, via email, USPS, or in person at the address above. Late bids will not be accepted. Bids must include all requested information. It is the bidder's responsibility to confirm receipt before the deadline.

BID CONTACT

Questions should be submitted in writing/email to:

Melissa Wolf, Administrative Assistant
Email: **wolfm@parkhill.k12.mo.us**

BID TIMELINE

- **Solicitation Release:** Friday, November 20, 2026
- **Bid Due Date/Opening:** Friday, December 18, 2026 @ 10:00 AM
- **Bid Award Recommendation to the Board of Education:** Thursday, January 14, 2027
- **Anticipated Bid Award Date:** Thursday, February 4, 2027 – *pending final Board approval*
- **Equipment Installation Tentative Date(s):** Monday/Tuesday, March 29/30, 2027

For general inquiries, contact the Nutrition Services Office at **(816) 359-4090**.

SCOPE

The Park Hill School District is requesting bids for turnkey installation of a new **Tall Base Electric High Temperature Door-Style Dishwashing Machine** in the Graden Elementary School Kitchen per attached general and technical specifications, or a pre-approved equivalent. The Park Hill School District anticipates purchasing the machine specified but does not guarantee purchase. Unit installation expected ***during the district Spring Break:*** *March 29-30, 2027, pending approval by the Board of Education*.

IMPORTANT NOTES

- **Quote must include:**
  - Cost of dishwasher unit
  - Removal and hauling off old unit
  - Delivery/transportation charges, as applicable
  - Installation fees
    - Including any anticipated stainless table or vent modifications
    - **Schedule Mandatory Pre-Bid Visit with Melissa Wolf @ 816-359-4090**
  - Removal and haul off debris
  - Startup by Factory Training Technician *required*
  - Warranty details
- Electrical and plumbing within 5 feet, *provided by others*
  - Electrical Requirements: 208-240/60/3 – **Verify with district electrician before placing order, Zack Vigliaturo @ 816-937-2905**
- Extended K-12 Industry 2-year warranty *requested*

1 each **<u>Hobart Model AM16T-BAS-4</u>** – Tall Base Electric High Temperature Door-Style Dishwashing Machine, *or preapproved equivalent*

Detailed specifications begin next page

<u>Bid submittal/price quote must also include the following information</u>:

Vendor Name: _____

Manufacturer Brand Quoted: _____

Model Number: _____

Cost per Unit: _____, including freight / delivery charges

Installation Cost: _____ **Authorized Installer:** _____

Warranty Details: _____ *(specify if greater than 1 year)*

Estimated Lead Time after Receipt of Order: _____ (weeks)

Graden Elementary School
8804 NW 45 Highway – Door 8
Kansas City, MO 64152

Dishwasher Specifications
November 2026

Hobart Model AM16T-BAS-4
Tall Base Electric High Temperature Door-Style Dishwashing Machine, *or pre-approved equivalent*

Standard Features, including:

- Hot water high temperature sanitizing with energy recovery
- Internal condensing system
- 60 racks per hour
- 27" pillarless door opening to accommodate 18" x 26" sheet pans
- 6-Pan Sheet Pan Rack, *provided*
- Straight-thru installation
- Electric booster heater/heat tank
- Smart Touchscreen, Automatic Fill, Door Actuated Start, AutoClean
- Stainless steel tanks, tank shelf, chamber, trim panels, frame and feet
- Spring counterbalance chamber
- X-shaped revolving interchangeable wash arms; Revolving interchangeable rinse arms
- Factory startup; Service Diagnostics
- Energy Star® Certified, cULus, NSF
- All other standard features – SEE ATTACHED
- Electrical Requirements: 208-240/60/3 – **field verify before placing order for unit**
- REQUIRED: Minimum Standard Warranty with 1-year parts and labor
    - REQUESTED: Extended 2-year K12 Industry Warranty to protect against manufacturer defects, as well as installation.
    - Warranty to begin first day of school operation, estimated January 5, 2027

Turnkey Installation to Include:

- Design & Planning – Site assessment of available space/utilities, including delivery accessibility
- Procurement – Sourcing correct equipment, ensuring compatibility with existing utilities
- Removal and haul off existing unit
- Deliver, uncrate, and set new unit in place
- Installation – including final plumbing and electrical connections; modify existing tables and/or vents, as needed
- Thoroughly clean area and haul off debris from worksite
- Startup by Factory Trained Technician – Verify equipment safety, performance and functionality
- Training & Documentation – Coordinate manufacturer rep to educate staff on operation and maintenance, and provide all necessary manuals

SCORECARD – 100 points

- Cost per unit
- Cost of installation
- Estimated lead time, after order confirmation – ability to commit to timeline
- Extended Warranty (2-years requested)

Scoring Guide	Points Available	Points Awarded
Cost of Unit	60	
Cost of Installation*	20	
Onsite Assessment/Pre-Bid Visit	10	
Lead Time	5	
Extended 2-year Warranty, *requested*	5	
TOTAL	**100**	

* **Cost of installation includes:** Removal of existing unit, any necessary modification to stainless tables or vents, unit delivery, placement, final connections and hauling off old unit.

Please return completed price quote to Melissa Wolf @ wolfm@parkhill.k12.mo.us , 816-359-4090

Alternate contact:
Grennan Sims, simsg@parkhill.k12.mo.us 816-359-4090

BUY AMERICAN PROVISION

The Park Hill School District participates in the National School Lunch Program and School Breakfast Program and is required to use the nonprofit Nutrition Services funds, to the maximum extent practicable, to buy domestic commodities or products for Program meals. A 'domestic commodity or product' is defined as one that is either produced in the U.S. or is processed in the U.S. substantially produced using agricultural commodities produced in the U.S. as provided in 7 CFR 210.21(d)."

Compliance with the Buy American Provision must be documented. Any exceptions must be specifically noted and may be rejected at the discretion of Park Hill School Nutrition Services.

Suppliers must certify the percentage of U.S. content in the products supplied to us. Exceptions to the Buy American provision are very limited; however, an alternative or exception may be approved upon request. To be considered for an alternative or exception, the request must be submitted with the original proposal. After award of bid, exceptions must be requested in writing to the Park Hill Nutrition Services Director a minimum of 7 day(s) in advance of delivery.

LOBBYING CERTIFICATION

Submission of this certification is a prerequisite for entering into this transaction Agreement and is imposed by Section 1352, Title 31, U.S. Code. This certification is a material representation of fact upon which reliance was placed when this transaction was made or entered into. Any person who fails to file the required certification shall be subject to civil penalty of not less than $10,000 and not more than $100,000 for each such failure.

The undersigned certifies, to the best of his/her knowledge and belief, that:

1. No Federal appropriated funds have been paid or will be paid on behalf of the undersigned, to any person for influencing or attempting to influence an officer or employee of any agency, a Member of Congress, an officer or employee of Congress, or an employee of a Member of Congress in connection with the awarding of a Federal contract, the making of a Federal grant, the making of a Federal loan, the entering into a cooperative agreement, and the extension, continuation, renewal, amendment, or modification of a Federal contract, grant, loan, or cooperative agreement.

2. If any funds other than Federal appropriated funds have been paid or will be paid to any person for influencing or attempting to influence an officer or employee of any agency, a Member of Congress, an officer or employee of Congress, or an employee of a Member of Congress in connection with this Federal contract or cooperative agreement, the undersigned shall complete and submit Standard Form LLL, "Disclosure of Lobbying Activities", in accordance with its instructions.

3. The undersigned shall require that the language of this certification be included in the award documents for all covered sub-awards exceeding $100,000 in Federal funds at all appropriate tiers and that all sub-recipients shall certify and disclose accordingly.

CLEAN AIR AND WATER ACT

As required by USDA, the undersigned certifies the following:

I, the vendor, am in compliance with all applicable standards, orders or regulations issued pursuant to the Clean Air Act of 1990, as amended (42 U.S.C. 1857(h)), Section 508 of the Clean Water Act, as amended (33 U.S.C.1368), Executive Order 117389 and Environmental Protection Agency Regulation, 40 CFR Part 15 as required under OMB Circular A-102, Attachment O, Paragraph 14(l) regarding reporting violations to the

grantor agency and to the United States Environment Protection Agency Assistant Administrator for the Enforcement.

DEBARMENT AND SUSPENSION

As required by Executive Order 12549, the undersigned certifies the following:

The Bidder certifies that neither it nor any of its principals (e.g., key employees) has been proposed for debarment, debarred or suspended by a federal agency according to Executive Order 12549 titled Debarment and Suspension. The prospective bidder shall provide immediate written notice to the person to which this proposal is submitted it at any time the prospective bidder learns that its certification was erroneous when submitted or has become erroneous by reason of changed circumstances. Federal and State penalties exist for vendors and districts that knowingly enter into contracts with suspended/debarred persons.

BYRD ANTI-LOBBYING AMENDMENT

As relevant, contractors that apply or bid for an award of $100,000 or more must file the required certification. Each tier certifies to the tier above that it will not and has not used Federal appropriated funds to pay any person or organization for influencing or attempting to influence an officer or employee of any agency, a member of Congress, officer or employee of Congress, or an employee of a member of Congress in connection with obtaining any Federal contract, grant or any other award covered by 31 U.S.C. 1352. Each tier must also disclose any lobbying with non-Federal funds that takes place in connection with obtaining any Federal award. Such disclosures are forwarded from tier-to-tier up to the non-Federal award. (31 U.S.C. 1352)

LIMITED LIABILITY INSURANCE

During the term of this contract, the Contractor shall maintain insurance coverage with not less than the type and requirements shown below for the Park Hill School District. Park Hill School District should be listed as an “additional insured” on General Liability Policy. Such insurance is to be provided at the sole cost of the contractor. These requirements do not establish limits of the contractor's liability and upon awarding of this contract, certified copies of original insurance policies shall be furnished to PHSNS.

a) Workers' Compensation with Waiver of subrogation to Park Hill Employer's Liability, including all states, and other endorsements, if applicable to the Project. Statutory and Bodily Injury by Accident: $1,000,000 each accident. Bodily Injury by Disease: $2,000,000 policy limit, $300,000 each employee. Park Hill shall be named as "additional insured" on workers’ compensation policy.

b) Commercial General Liability Occurrence Form including, but not limited to, Premises and Operations, Products Liability Broad Form Property Damage, Contractual Liability $1,000,000; Damage to premises rented to your limit, $100,000 anyone premises, Medical expense limit $5,000 any one person. Personal and Advertising Injury Liability. $1,000,000 each occurrence. Limit Bodily Injury and Property Damage Combined $300,000 Products-Completed Operations General Aggregate Limit $2,000,000 per Job Aggregate $1,000,000 Personal and Advertising Injury Limit. Park Hill shall be named as "additional insured" on commercial general liability policy.

c) Automobile Liability Coverage: $300,000 Combined Liability Limits per individual, $2,000,000 per occurrence, Bodily Injury and Property Damage Combined. Park Hill shall be named as "additional insured" on automobile policy.

CIVIL RIGHTS/ ANTI-DISCRIMINATION

In accordance with federal civil rights law and U.S. Department of Agriculture (USDA) civil rights regulations and policies, this institution is prohibited from discriminating on the basis of race, color, national origin, sex (including gender identity and sexual orientation), disability, age, or reprisal or retaliation for prior civil rights activity.

Program information may be made available in languages other than English. Persons with disabilities who require alternative means of communication to obtain program information (e.g., Braille, large print, audiotape, American Sign Language), should contact the responsible state or local agency that administers the program or USDA's TARGET Center at (202) 720-2600 (voice and TTY) or contact USDA through the Federal Relay Service at (800) 877-8339.

To file a program discrimination complaint, a Complainant should complete a Form AD-3027, USDA Program Discrimination Complaint Form which can be obtained online at: **https://www.usda.gov/sites/default/files/documents/ad-3027.pdf**, from any USDA office, by calling (866) 632-9992, or by writing a letter addressed to USDA. The letter must contain the complainant's name, address, telephone number, and a written description of the alleged discriminatory action in sufficient detail to inform the Assistant Secretary for Civil Rights (ASCR) about the nature and date of an alleged civil rights violation. The completed AD-3027 form or letter must be submitted to USDA by:

Submit your completed form or letter to USDA by:

1. **Mail**: U.S. Department of Agriculture
   Office of the Assistant Secretary for Civil Rights
   1400 Independence Avenue, SW
   Washington D.C. 20250-9410
2. **Fax**: (833) 256-1665 or (202) 690-7442 or
3. **Email**: program.intake@usda.gov

HOBART

Project _____

AIA # _____ SIS # _____

Item # _____ Quantity _____ C.S.I. Section 114000

COMMERCIAL DISHWASHERS

AM16T-BAS
TALL BASE ELECTRIC
High Temperature
Door-Style Dishwashing Machine



c UL us NSF U.S. GREEN BUILDING COUNCIL MEMBER ENERGY STAR

SPECIFIER STATEMENT

Specified unit will be a Hobart AM16 Tall Base electric high temperature dishwashing machine. Features include 3-sided pillarless hood, touch-screen controls with WiFi connectivity, NSF pot and pan rating for 2-, 4- & 6-minute cycles, 27" door opening, pumped drain, auto door start with auto fill, interchangeable stainless steel rinse arms and X-shaped wash arms, delime cycle, advanced diagnostics and service connection, up to 60 racks per hour, .67 U.S. gallons per rack pumped final rinse.

1 year parts and labor warranty.

STANDARD FEATURES

+ .67 gallons per rack pumped final rinse
+ 60 racks per hour – hot water sanitizing
+ User-friendly smart touchscreen controls
+ WiFi connectivity
+ SmartConnect app and cloud with machine status, temperature logs, error code reporting, and cost, consumption and usage analysis
+ Two stage filtration
+ Pillarless opening
+ 3-sided hood
+ Single point electrical connection standard, field convertible to dual point connection
+ 3 phase standard, field convertible to single phase
+ Temperature and chemical lock outs (with Hobart equipped chemical pumps)
+ Pumped drain
+ Timed wash cycles for 1, 2, 4 or 6 minutes
+ NSF pot and pan rating for 2-, 4- & 6- minute cycles
+ Sense-A-Temp™ 70°F rise electric booster heater
+ Self-draining, high efficiency wash pump with stainless steel impeller
+ 27" door opening for 18" x 26" sheet pans or 60-quart mixing bowl
+ Stainless steel drawn tank, tank shelf, chamber, trim panels, frame and feet
+ Spring counterbalanced chamber with UHMW guides
+ X-shaped revolving, interchangeable upper and lower anticlogging wash arms
+ Revolving, interchangeable upper and lower rinse arms
+ Slanted, self-locating, one-piece scrap screen and basket system
+ Automatic fill
+ Door actuated start
+ AutoClean
+ Vent fan control
+ Service diagnostics
+ Straight-through or corner installation
+ Delime cycle with notification (field activated)
+ Sheet pan rack

OPTIONS & ACCESSORIES (Available at extra cost)

❑ Peg, combination and wine rack
❑ Chemical pumps
❑ Splash shield for corner installations
❑ Flanged and seismic feet
❑ Water hammer arrestor kit
❑ Rapid fill kit
❑ Sink integration kit
  – Sink saddle & 3" leg extension
  – Sink rail kit
  – Fold down table
❑ Drain water tempering kit
❑ Door lock kit
❑ Prison package
❑ Marine package
❑ Pumped drain air gap kit

AM16 SERIES – AM16T-BAS TALL BASE ELECTRIC

Approved by _____ Date _____ Approved by _____ Date _____

HOBART

AM16T-BAS TALL BASE ELECTRIC

High Temperature
Door-Style Dishwashing Machine

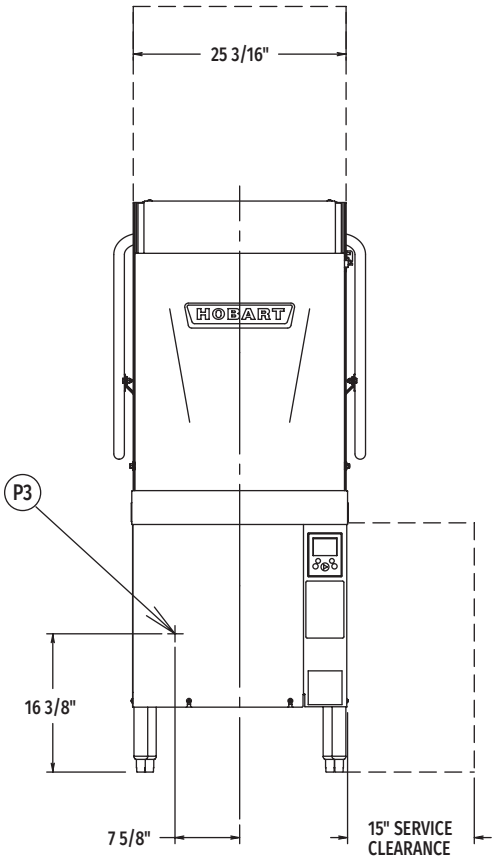

Front View

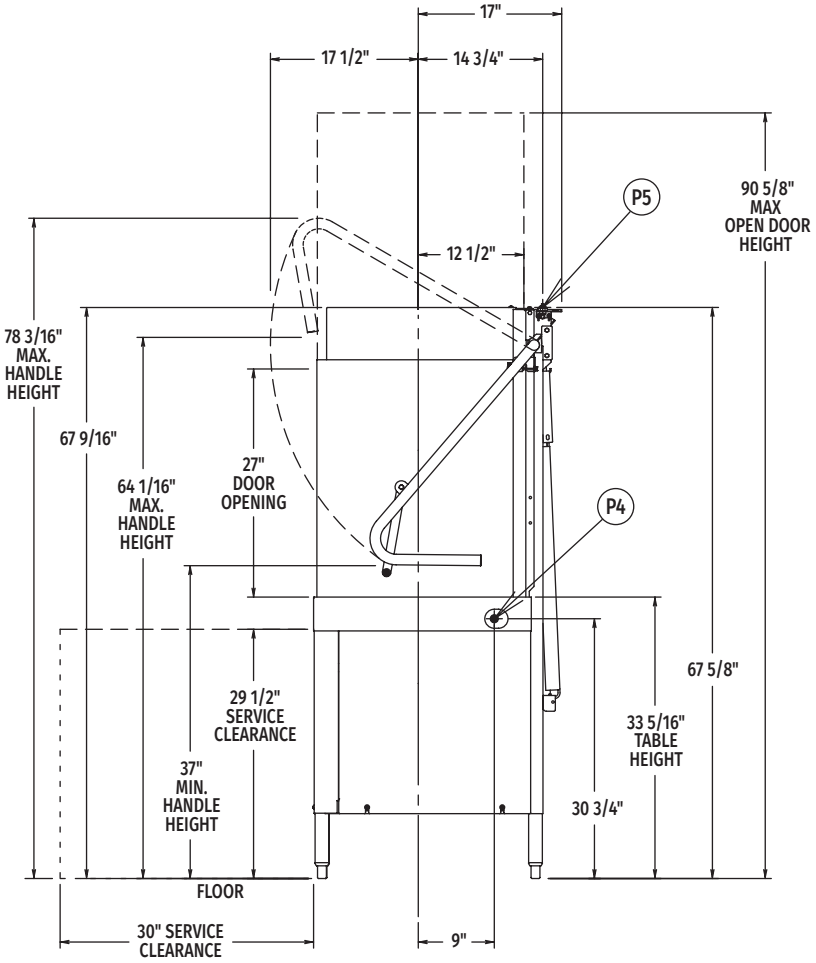

Right Side View

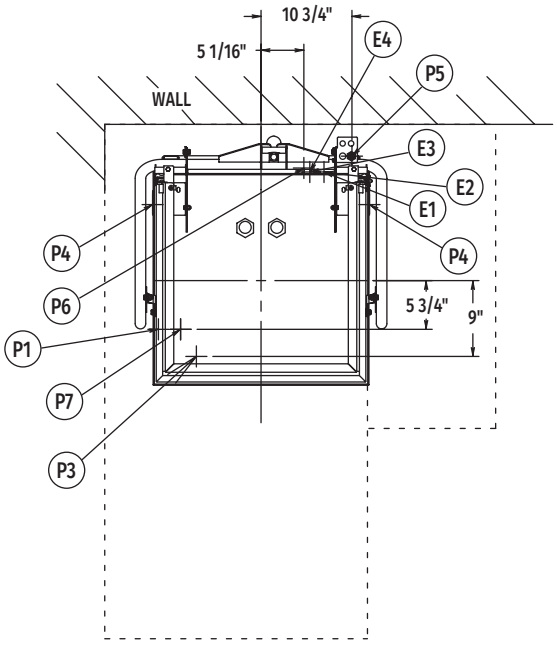

Top View

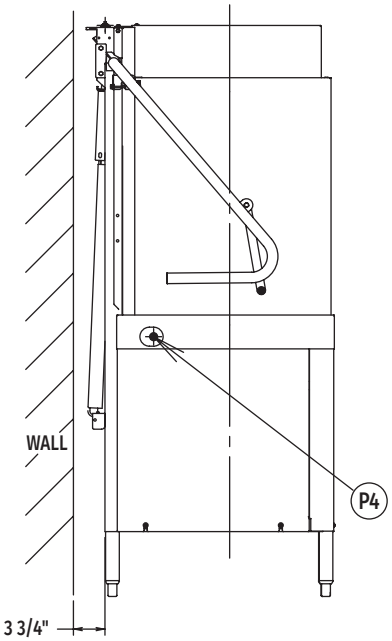

Left Side View

MODEL:
AM16T-BAS
E-950440

HOBART

AM16T-BAS TALL BASE ELECTRIC

High Temperature
Door-Style Dishwashing Machine

WARNING: Electrical and grounding connections must comply with the applicable portion of the National Electrical Code and/or other local electrical codes.

Plumbing connections must comply with applicable sanitary, safety, and plumbing codes.

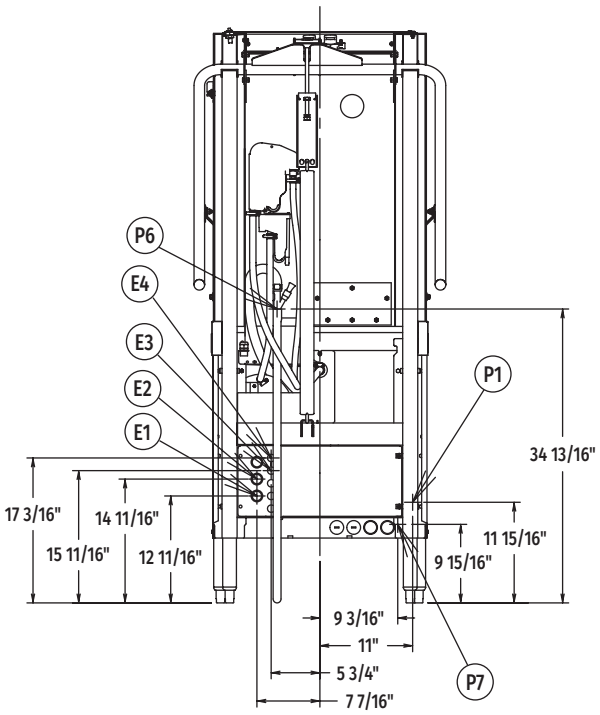

Rear View

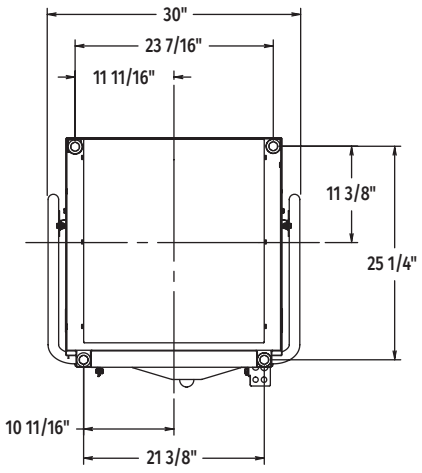

Bottom View

LEGEND

Electrical Connections	
E1	Electrical connection: wash pump motor & sump heater, 1" or 3/4" conduit hole; 12-11/16" AFF.
E2	Electrical connection: electric booster & controls only or single point electrical connection (3PH only) 1" or 3/4" conduit hole; 14-11/16" AFF.
E3	Electrical connection: detergent & rinse agent feeders, (DPS1 & DPS2) 1.5 amps @ nameplate supply voltage, (RPS1 & RPS2) 1.5 amps @ nameplate supply voltage; 1/2" conduit hole, 15-11/16" AFF.
E4	Electrical connection: vent fan control (VFC1 & VFC2) switching circuit only 1.5 amps @ nameplate supply voltage; 1/2" conduit hole, 17-3/16" AFF.
Plumbing Connections	
P1	Common water connection including booster heater: 110°F water minimum, 15-65 PSI recommended; 3/4" female garden hose fitting on 6' long hose supplied with machine; 11-15/16" AFF.
P3	Detergent probe sensor: remove cap and stud assembly to access 7/8" hole; 16-3/8" AFF.
P4	Detergent feeder: two locations available. Remove cap and stud assembly to access 7/8" hole; 30-3/4" AFF.
P5	Rinse agent feeder: remove 1/8" NPT pipe plug to access 1/8" NPT tapped hole; 67-5/8" AFF.
P6	Drain connection: 5/8" barb fitting with 6' long hose supplied with machine; 34-13/16" AFF. Maximum height 40" AFF.
P7	Optional – cold water connection: 55°F water minimum (drain water tempering - when ordered); 3/4" female garden hose fitting on 8' long hose; 9-5/16" AFF.

SPECIFICATIONS

Capacities

Racks Per Hour (maximum) 60
Dishes per Hour (average 25 per rack) 1,500
Glasses per Hour (average 45 per rack) 2,700
Wash Tank (U.S. gallons) 10.5

Motor Horsepower

Rinse Pump 0.18
Wash Pump 2
Drain Pump 0.21

Rinse

Gallons per Rack 0.67
Gallons per Hour (maximum consumption) 40.2

Peak Rate of Drain Flow

Gallons per Minute (initial rate with full tank) 18.5

Heating

Electric Booster (kW) 7.1
Electric Heating Unit (kW) 5.4

Exhaust Requirements . . . . . 450 CFM

Shipping Weight (approximate) . . . . . 357 lbs.

Crated Dimensions . . . . . 73.75"H x 36.5"W x 36.5"L

HOBART

AM16T-BAS TALL BASE ELECTRIC

High Temperature
Door-Style Dishwashing Machine

E1	AM16 with Electric Heat (When Field Converted to Dual Point)		
Voltage	Rated Amps	Minimum Supply Circuit Ampacity	Maximum Protective Device
208-240/60/1	39.6	50	50
208-240/60/3	26.9	30	30
480/60/3	10.5	15	15
200-240/50/3*	22.1	30	30
380-415/50/3*	11.8	20	20

E2	Electric Booster & Controls (When Field Converted to Dual Point)		
Voltage	Rated Amps	Minimum Supply Circuit Ampacity	Maximum Protective Device
208-240/60/1	42.3	50	50
208-240/60/3	25.6	30	30
480/60/3	12.9	15	15
200-240/50/3*	25.6	30	30
380-415/50/3*	14.7	20	20

*These electrical specifications are not submitted for UL or CUL listing

E2	AM16 Single Point Electrical Service Connection as Shown Below		
Voltage	Rated Amps	Minimum Supply Circuit Ampacity	Maximum Protective Device
208-240/60/3	52.5	60	60
480/60/3	23.5	30	30
200-240/50/3*	47.7	60	60
380-415/50/3*	26.5	30	30

*These electrical specifications are not submitted for UL or CUL listing

Approximate Heat Gain to Space without Vent Hood	
Type	BTU/Hr.
Latent	12,300
Sensible	5,700

Miscellaneous Notes: All dimensions taken from floor line may increase 7/8" or decrease 3/8" depending on leg adjustment.

Vent hood (if required) to provide a minimum 450 CFM exhaust (ref installation instructions).

Net weight of machine including booster: 340 lbs.
Domestic shipping weight including booster: 360 lbs.

Size of racks – 19¾" x 19¾".

Backflow prevention provided by NSF-approved air gap device.

Plumbing Notes: Water hammer arrestor (meeting ASSE-1010 standard or equivalent) to be supplied (by others) in common water supply line at service connection.

Recommended water hardness to be 3 grains or less for best results.

Note: Electric heating unit & booster (kW) calculated at 208V.

Recommended building flowing water pressure to the dishwasher at or above 20 PSI. Pressures lower than 20 PSI may affect machine fill/start-up times.

This is a pumped rinse machine. Pressure regulating valve is not necessary on hot or cold lines.

For convenience when cleaning, water tap should be installed near machine with heavy duty hose and squeeze valve.

AM16T-BAS TABLING CONFIGURATIONS AND TRACK DESIGN

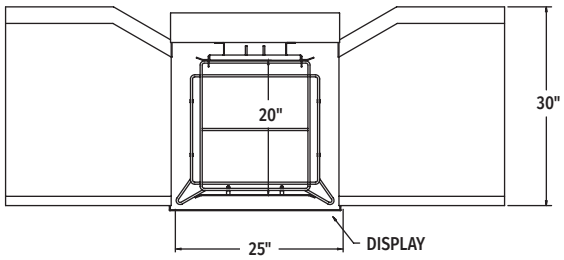

Pass Thru Installation

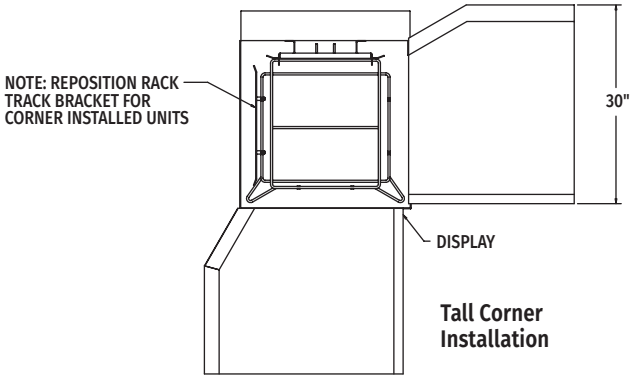

Tall Corner Installation

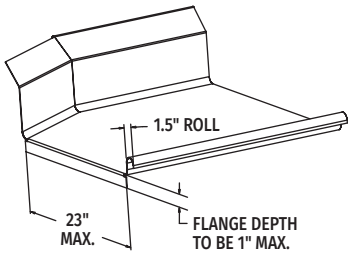

Suggested Table Design

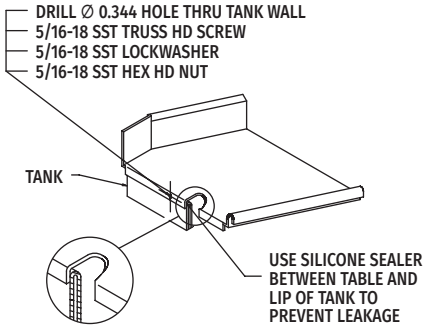

As continued product improvement is a policy of Hobart, specifications are subject to change without notice.