Barretts Elementary School

1780 CARMAN RD., MANCHESTER, MO 63021

Parkway Project #: PN012501B

BUILDING RENOVATION & SITE IMPROVEMENTS

BID/ PERMIT SET
ISSUE DATE- NOVEMBER 12, 2026

Architect

Bond Architects, Inc.
MO State Cert. of Authority #2009027409
222 South Central Avenue, Suite 501
St. Louis, MO 63105
(314) 863.4994 tel
(314) 863.4996 fax
Contact: Sue King
Email: sking@bondarchitectsinc.com

Civil Engineer

COLE Design Group
Project Number: 26-0052
Certificate of Authority #
401 S. 18th Street, Suite 200
St Louis, MO 63103
314.984.9887 tel
Contact: Jared Wilson
Email: jwilson@colestl.com

MEP / FP Engineer

RTM Engineering Consultants
Project Number: 26.B00203.1928
Certificate of Authority #2002028690
3701 Lindbergh Blvd.
St Louis, MO 63127
314.725.5889 tel
Contact: Margaret Bailey
Email: margaret.bailey@rtmec.com

STRUCTURAL Engineer

CASE Engineering
Project Number: BDA-MO-05-26
Certificate of Authority #001498
796 Merus Ct.
Fenton, MO 63026
636.349.1600 tel
Contact: Ardie Mansouri
mail: amansouri@caseengineeringinc.com

Asbestos Abatement Consultant

PINCHIN, LLC
Project Number: R262.00457.003
Certificate of Authority #
2 Cityplace Drive, Suite 195,
St. Louis, Missouri 63141
314.230.0182 tel
Contact: Megan Kienker
Email: Megan.Kienker@pinchin.com

PROJECT SITE

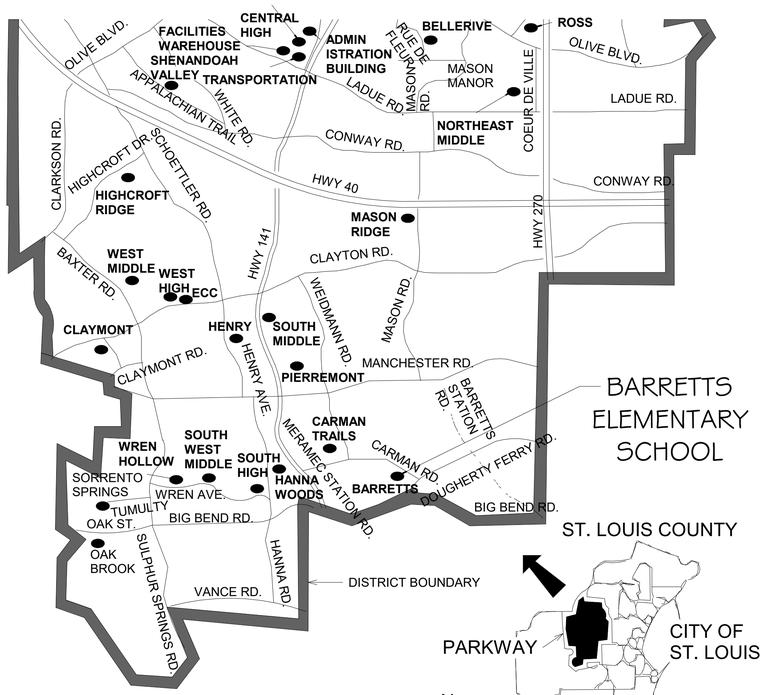

PARKWAY SCHOOL DISTRICT
ST. LOUIS COUNTY, MISSOURI

SHEET INDEX

SHEET INDEX I	
Sheet Number	Sheet Name
0.0	COVER
Civil	
C1.0	COVER SHEET
C2.0	SPECIFICATION SHEET
C3.0	OVERALL EXISTING CONDITIONS
C4.0	DEMO, SITE, UTILITY AND GRADING PLAN (NORTH)
C4.1	DEMO, SITE, UTILITY AND GRADING PLAN (SOUTH)
C5.0	DETAIL SHEET
C5.1	DETAIL SHEET
C6.0	SWPPP
C6.1	SWPPP NOTES AND DETAILS
C7.0	INLET DRAINAGE AREA MAP
C8.0	PRE-POST DRAINAGE AREA MAP
Architectural	
A0.1	CODE INFORMATION
A0.2	LIFE SAFETY PLAN
A0.3	GENERAL NOTES & ABBREVIATIONS
A0.4	GENERAL NOTES & SYMBOLS
A0.5	GENERAL & DEMOLITION NOTES
AD2.0	LOWER LEVEL DEMO PLAN
AD2.1	LEVEL 1 DEMO PLAN
AD2.2	ENLARGED DEMO PLANS
AD5.1	DEMO EXTERIOR ELEVATIONS
A1.0	SITE PLAN
A2.0	LOWER LEVEL PLAN
A2.1	LEVEL 1 FLOOR PLAN
A3.1	ENLARGED PLANS
A5.1	EXTERIOR ELEVATIONS
A8.1	WALL SECTIONS
A8.2	WALL SECTIONS
A9.1	EXTERIOR DETAILS
A9.2	EXTERIOR DETAILS

SHEET INDEX I	
Sheet Number	Sheet Name
A12.4	DOOR & WINDOW TYPES
A13.1	FINISH PLAN & LEGEND
A15.0	SIGNAGE TYPES & ELEVATIONS
Structural	
S1.1	GENERAL NOTES
S1.2	GENERAL NOTES
S1.3	TYPICAL DETAILS
S2.1	STAIRWELL FOUNDATION PLAN

BID ALTERNATES:

ALTERNATE #1 - REMOVE AND REPLACE DOORS, SIDELITE & FRAME & FLOORING, BASE, TRANSITION STRIP AND TOUCH UP WALL PAINT TO MATCH EXISTING AT CORRIDOR- C1X. (IF ALTERNATE #1 IS NOT ACCEPTED, THEN NO WORK WILL BE PERFORMED IN CORRIDOR C1X.)

ALTERNATE #2 - STAIR EST-008 RETAINING WALLS: REMOVE & REPLACE RETAINING WALLS/ FOOTINGS IN THEIR ENTIRETY, (IF DETERMINED DURING DEMOLITION OF EXISTING STAIRS THAT RETAINING WALLS DO NOT EXTEND TO REQUIRED DEPTHS FOR THE NEW LESS STEEP CODE COMPLIANT STAIRS. SEE ALSO STRUCTURAL DRAWINGS.)

ALTERNATE #3 - NO WORK REQUIRED AT STAIR EST-008, HANDRAILS, SURROUNDING RETAINING WALLS & GUARDRAILS

bond architects
222 SOUTH CENTRAL AVE.
SUITE# 501
ST. LOUIS, MO 63105
TEL: 314.863.4994
FAX: 314.863.4996
www.bondarchitectsinc.com
Bond Architects, Inc.
Missouri State Certificate of Authority # 2009027409

COLE Design Group
Civil Engineer
Project Number: 26-0052
Certificate of Authority #
401 S. 18th Street, Suite 200
St Louis, MO 63103
314.984.9887 tel

RTM Engineering Consultants
MEP / FP Engineer
Project Number: 26.B00203.1928
Certificate of Authority #2002028690
3701 Lindbergh Blvd.
St Louis, MO 63127
314.725.5889 tel

CASE Engineering
STRUCTURAL Engineer
Project Number: BDA-MO-05-26
Certificate of Authority #001498
796 Merus Ct.
Fenton, MO 63026
636.349.1600 tel

PINCHIN, LLC
Asbestos Abatement Consultant
Project Number: R262.00457.003
Certificate of Authority #
2 Cityplace Drive, Suite 195,
St. Louis, Missouri 63141
314.230.0182 tel

Barretts Elementary School
1780 CARMAN RD., MANCHESTER, MO 63021
Parkway Project #: PN012501B
BUILDING RENOVATION & SITE IMPROVEMENTS
Parkway School District
363 N. Woods Mill Rd., Chesterfield, MO 63017
314.415.8231 tel

Project No: 26016

Revisions

Description	Date

This drawing and the details on it are the sole property of the architect and may be used for this specific project only. It shall not be loaned, copied or reproduced, in whole or in part, or for any other purpose or project without the written consent of the Architect.
Copyright © 2023 by Bond Architects, Inc.

STATE OF MISSOURI
MICHELLE R. WELLS
NUMBER A-2021031961
ARCHITECT
11/12/26

The Professional Architects seal affixed to this sheet applies only to the material and items shown on this sheet. All drawings, instruments or other documents not exhibiting this seal shall not be considered prepared by this architect, and this architect expressly disclaims any and all responsibility for such plan, drawings or documents not exhibiting this seal.

DATE: 11/12/2026

BID/ PERMIT SET

COVER

0.0

11/5/2026 5:09:17 PM

PARKWAY SCHOOL DISTRICT
BARRETTS ELEMENTARY SCHOOL

A TRACT OF LAND BEING PART OF LOT 5 OF THE PETER BREEN ESTATE SITUATED IN U.S. SURVEY 1928 AND SECTION 5, TOWNSHIP 44 NORTH, RANGE 5 EAST, UNINCORPORATED ST. LOUIS COUNTY, MISSOURI

CONSTRUCTION DOCUMENTS



LOCATION MAP
(NOT TO SCALE)

INDEX

		REVISIONS 1	2	3	4	5	6	7	8	9
C1.0	COVER SHEET									
C2.0	SPECIFICATION SHEET									
C3.0	OVERALL EXISTING CONDITIONS									
C4.0	DEMO, SITE, UTILITY AND GRADING PLAN (NORTH)									
C4.1	DEMO, SITE, UTILITY AND GRADING PLAN (SOUTH)									
C5.0	DETAIL SHEET									
C5.1	DETAIL SHEET									
C6.0	SWPPP									
C6.1	SWPPP NOTES AND DETAILS									
C7.0	INLET DRAINAGE AREA MAP									
C8.0	PRE-POST DRAINAGE AREA MAP									

LIMITS OF DISTURBANCE:

THE CONTRACTOR SHALL STAY WITHIN THE LIMITS OF DISTURBANCE AS SHOWN ON THE PLANS AND MINIMIZE DISTURBANCE WITHIN THE WORK AREA WHEREVER POSSIBLE.

STORMWATER MANAGEMENT FUTURE DISTURBANCE NOTE:

LAND AREA DISTURBED = ±0.53 ACRES
DIFFERENTIAL RUNOFF = +0.00 CFS

ANY FUTURE LAND DISTURBANCE AND/OR INCREASE IN IMPERVIOUS AREA ON THIS SITE MAY REQUIRE ADDITIONAL STORMWATER MANAGEMENT PER MSD REGULATIONS IN PLACE AT THAT TIME (INCLUDING TOTAL LAND DISTURBANCE AND/OR IMPERVIOUSNESS ADDED ON THIS PLAN).

PERTINENT DATA

OWNER	=	PARKWAY SCHOOL DISTRICT
SITE ADDRESS	=	1780 CARMAN RD MANCHESTER, MO 63021
SITE ACREAGE	=	±9.80 AC
DISTURBED LAND	=	±0.53 AC
EXISTING ZONING	=	R-1 (SINGLE-FAMILY RESIDENTIAL DISTRICT)
PROPOSED ZONING	=	R-1 (SINGLE-FAMILY RESIDENTIAL DISTRICT)
LOCATOR NUMBER	=	24P610413
SCHOOL DISTRICT	=	PARKWAY
WATERSHED	=	GRAND GLAIZE CREEK
FEMA MAP PANEL	=	29189C0303K, DATE: 2/14/2015

UTILITIES

SEWER SERVICE = METROPOLITAN ST. LOUIS SEWER DISTRICT
2350 MARKET ST.
ST. LOUIS, MO 63103
PH. (314) 768-6260

FIRE DISTRICT = WEST COUNTY EMS & FIRE PROTECTION DISTRICT
223 HENRY AVE.
MANCHESTER, MO 63011
PH. (636) 256-2000

WATER SERVICE = MISSOURI AMERICAN WATER
727 CRAIG ROAD
ST. LOUIS, MO 63141
PH. (314) 996-2244

GAS SERVICE = SPIRE
4118 SHREWSBURY AVE.
ST. LOUIS, MO. 63119
PH. (800) 887-4173

ELECTRIC SERVICE = AMEREN MISSOURI (UNION ELECTRIC COMPANY)
12121 DORSETT RD.
MARYLAND HEIGHTS, MO 63043
PH. (314) 992-8950

TELECOM SERVICE = SPECTRUM (CHARTER COMMUNICATIONS)
101 NORTHWEST PLAZA
ST. ANN, MO 63074
PH. (833) 267-6097

TELECOM SERVICE = AT&T
402 N. 3RD ST.
ST. CHARLES, MO 63301
PH. (636) 795-3754

UTILITY INFORMATION

UTILITIES SHOWN HAVE BEEN TAKEN FROM AVAILABLE SURVEYS, UTILITY COMPANY MAPS AND PHYSICAL PROPERTY INSPECTION. THE LOCATIONS AND FACILITIES SHALL BE CONSIDERED APPROXIMATE ONLY. THERE MAY BE ADDITIONAL UTILITIES THAT HAVE NOT BEEN SHOWN ON THIS SURVEY. THE CONTRACTOR WILL BE RESPONSIBLE FOR THE LOCATIONS OF ALL UTILITIES PRIOR TO EXCAVATION OR CONSTRUCTION.

MISSOURI ONE CALL SYSTEM, INC. 1-800-344-7483 STOP-CALL BEFORE YOU DIG!

CALL 1-800-DIG-RITE (MISSOURI ONE CALL) TO HAVE LOCATIONS MARKED IN THE FIELD (SUBSCRIBING UTILITIES REQUIRE 48 HOURS NOTICE PRIOR TO CONSTRUCTION).

SITE BENCHMARK INFORMATION

SITE BENCHMARK #127
CUT "X" ON CONCRETE WALK, NEAR SOUTHWEST CORNER OF SCHOOL BUILDING, APPROXIMATELY 345 FEET WEST OF THE CENTERLINE OF CARMAN ROAD AND 225 FEET NORTH OF THE CENTERLINE OF DOUGHERTY FERRY ROAD. ELEVATION=450.35 NAVD88

SITE BENCHMARK #130
CUT "U" ON CONCRETE BASE OF LIGHT STANDARD MONUMENT FOUND APPROXIMATELY 130 FEET SOUTHWEST OF THE CENTERLINE OF CARMAN ROAD AND 275 FEET SOUTHEAST OF STONE CANYON DRIVE.
ELEVATION=472.40 NAVD88

LEGEND

EXISTING		PROPOSED
460 / 459	CONTOURS	460 / 459
620.15	SPOT GRADE	621.25 (TOP OF CURB) (FINISH PAVEMENT)
	TREE LINE	
8"	TREE	
	BUSH	
	STORM MANHOLE	
A	AREA INLET	
	CURB INLET	
	GRATED INLET	
	FLARED END SECTION	
12" RCP	STORM SEWER	
	GRATED MANHOLE	
69	STORM DESIGNATOR	22
DS	DOWNSPOUT	
DP	DRAINAGE PIPE	
	SWALE/SLOPE INDICATOR	
S	SANITARY MANHOLE	
8"VCP	SANITARY SEWER	SS
	CLEAN OUT	CO
A	SANITARY DESIGNATOR	A
	UTILITY POLE	
	GUIDE WIRE	
OU	OVERHEAD UTILITY	OU
UE UE	UNDERGROUND ELECTRIC	UE UE
	ELECTRIC MARKER	
	ELECTRIC METER	
	ELECTRIC BOX	
EPB	ELECTRIC PULL BOX	
	ELECTRIC TRANSFORMER	
E	ELECTRIC MANHOLE	
UT	UNDERGROUND TELEPHONE	UT
	FIBER OPTIC MARKER	
	CABLE MARKER	
G	GAS LINE	G
	GAS VALVE	GV
	GAS METER	GM
	GAS MARKER	
W	WATER LINE	W
	WATER VALVE	WV
	WATER METER	
	FIRE HYDRANT	
	SIGN	
	MAIL BOX	
B-1 405.5	TEST HOLE	
	LIGHT STANDARD	
X X X X	FENCE	X X
B	BOLLARD	
	RETAINING WALL	
	CONCRETE PAVEMENT	
	SILTATION FENCE	
AC	AIR CONDITIONER	
	FLAG POLE	
	MONITORING WELL	
PM	PARKING METER	
	PLANTER	
SCB	SPRINKLER CONTROL BOX	
SHD	SPRINKLER	
SVLV	SPRINKLER VALVE	
	TRAFFIC CONTROL BOX	
	TRAFFIC POLE	
	YARD LIGHT	
	GUARD RAIL	
	PROPERTY LINE	
	EASEMENT	
	SETBACK	
	INLET PROTECTION	
	WATTLE	
	CHECK DAM	
	USE IN PLACE	(UIP)
	TO BE REMOVED	(TBR)
	ADJUST TO GRADE	(ATG)
	TO BE REMOVED & RELOCATED	(TBR&R)
	TYPICAL	(TYP)
	NOT TO SCALE	N.T.S.
	HIGH POINT IN GRADE	HP
	LOW POINT IN GRADE	LP
	TOP OF WALL	TW
	BOTTOM OF WALL	BW
	NOT IN CONTRACT	(NIC)

SCALE: 3/4" = 1'-0" (0, 0.25', 0.5', 1')
SCALE: 1/2" = 1'-0" (0, 0.5', 1', 2')
SCALE: 1" = 1'-0" (0, 0.5', 1', 2')
SCALE: 3/8" = 1'-0" (0, 1', 2', 3')
SCALE: 1/4" = 1'-0" (0, 2', 4', 8')
SCALE: 1/8" = 1'-0" (0, 4', 8', 16')
SCALE: 1/16" = 1'-0" (0, 8', 16', 32')

bond architects
222 SOUTH CENTRAL AVE.
SUITE# 501
ST. LOUIS, MO 63105
TEL: 314.863.4994
FAX: 314.863.4996
www.bondarchitectsinc.com
Bond Architects, Inc.
Missouri State Certificate of Authority # 2009027409

Cole & Associates, Inc.
Civil Engineer
Project Number: 26-0052
Certificate of Authority #001165
401 S. 18th Street, Suite 200
St Louis, MO 63103
314.984.9887 tel

RTM Engineering Consultants
MEP / FP Engineer
Project Number: 26.B00203.1928
Certificate of Authority #2002028690
3701 Lindbergh Blvd.
St Louis, MO 63127
314.725.5889 tel

PINCHIN, LLC
Asbestos Abatement Consultant
Project Number: R262.00457.003
Certificate of Authority #
2 Cityplace Drive, Suite 195,
St. Louis, Missouri 63141
314.230.0182 tel

Barretts Elementary School
1780 CARMAN RD., MANCHESTER, MO 63021
Parkway Project #: PN012501B
BUILDING RENOVATION & SITE IMPROVEMENTS

Parkway School District
363 N. Woods Mill Rd.,
Chesterfield, MO 63017
314.415.6231 tel

Project No: 26016

Revisions

Description	Date

This drawing and the details on it are the sole property of the architect and may be used for this specific project only. It shall not be loaned, copied or reproduced, in whole or in part, or for any other purpose or project without the written consent of the Architect. Copyright © 2023 by Bond Architects, Inc.

CIVIL ENGINEERS
CORPORATE ENGINEERING CERTIFICATE #001165
STATE OF MISSOURI STANLEY EARL FOWLER JR. NUMBER PE-2020000037 PROFESSIONAL ENGINEER
STANLEY EARL FOWLER, JR.
CIVIL ENGINEER
PE NO: PE-2020000037
11/12/2026

The Professional Architects seal affixed to this sheet applies only to the material and items shown on this sheet. All drawings, instruments or other documents not exhibiting this seal shall not be considered prepared by this architect, and this architect expressly disclaims any and all responsibility for such plan, drawings or documents not exhibiting this seal.

DATE: 11/12/2026

BID/ PERMIT SET

COVER SHEET

C1.0

USER: Patrick Barry TAB: C1.0 COVER SHEET
DATE: November 5, 2026 - 2:05:59 PM
DRAWING: S:\JOBS\Jobs\2026\26-0052\CADD\C-Plan\PlotSheets\0_PLAN_COVER-SHEC_26-0052.dwg

Save

SCALE 3" = 1'-0"
0 0.25' 0.5' 1'

SCALE 1 1/2" = 1'-0"
0 0.5' 1' 2'

SCALE 1" = 1'-0"
0 0.5' 1' 2'

SCALE 3/4" = 1'-0"
0 1' 2' 3'

SCALE 1/2" = 1'-0"
0 1' 2' 4'

SCALE 1/4" = 1'-0"
0 2' 4' 8'

SCALE 1/8" = 1'-0"
0 4' 8' 16'

SCALE 1/16" = 1'-0"
0 8' 16' 32'

USER: Patrick Barry TAB: C2.0 SPECIFICATION SHEET
DATE: November 5, 2026 - 2:20:59 PM
DRAWING: S:\JOBS\Jobs\2026\26-0052\CADD\C-Plan\PlotSheets\0_PLAN_COVER-SPEC_26-0052.dwg

GENERAL NOTES

1. IT SHALL BE THE CONTRACTOR'S RESPONSIBILITY TO FIELD VERIFY THE EXACT HORIZONTAL AND VERTICAL LOCATIONS AND SIZES OF ALL EXISTING UTILITIES, WHETHER SHOWN OR NOT SHOWN ON THIS PLAN, PRIOR TO THE START OF ANY CONSTRUCTION. THE ENGINEER HAS NOT FIELD VERIFIED THE EXISTING UTILITIES. THE UTILITIES SHOWN ON THIS PLAN HAVE BEEN TAKEN FROM RECORDS AND UTILITY MAPS MADE AVAILABLE TO THE ENGINEER AND THE LOCATIONS AND SIZES SHALL BE CONSIDERED APPROXIMATE ONLY. OTHER UTILITIES, NOT SHOWN ON THIS PLAN, MAY EXIST ON OR NEAR THE SITE.
2. TOPOGRAPHIC SURVEY BY COLE AND ASSOCIATES INC.
3. ALL MATERIALS AND METHODS OF CONSTRUCTION TO MEET THE CURRENT STANDARDS AND SPECIFICATIONS AS REQUIRED BY THE CITY OF MANCHESTER, MO.
4. ALL GRADED AREAS SHALL BE PROTECTED FROM EROSION BY EROSION CONTROL DEVICES AND/OR SEEDING AND MULCHING. EROSION CONTROL SHALL NOT BE LIMITED TO WHAT IS SHOWN ON THE PLAN. WHATEVER MEANS NECESSARY SHALL BE TAKEN TO PREVENT SILTATION AND EROSION FROM FROM ENTERING NATURAL STREAMS AND ADJACENT ROADWAYS, PROPERTIES, AND DITCHES.
5. PRIOR TO BEGINNING ANY WORK ON THE SITE, THE CONTRACTOR SHALL CONTACT THE OFFICE OF THE DEVELOPER FOR SPECIFIC INSTRUCTIONS RELEVANT TO THE SEQUENCING OF WORK.
6. GRADING CONTRACTOR SHALL INSTALL SILTATION CONTROL PRIOR TO STARTING THE GRADING. ADDITIONAL SILTATION CONTROL DEVICES MAY BE REQUIRED AS DIRECTED BY THE CITY OF MANCHESTER OR THE DEVELOPER.
7. ALL FILLS AND BACKFILLS SHALL BE MADE OF SELECTED EARTH MATERIALS, FREE FROM BROKEN MASONRY, ROCK, FROZEN EARTH, RUBBISH, ORGANIC MATERIAL AND DEBRIS.
8. PROPOSED CONTOURS SHOWN ARE FINISHED ELEVATIONS ON PAVED AREAS. CONTRACTOR TO GRADE ALL AREAS TO REQUIRED SUBGRADE.
9. ALL FILL PLACED FOR PROPOSED STORM AND SANITARY SEWER LINES AND/OR PAVED AREAS, AND FOR DRAINAGE BERMS SHALL BE COMPACTED TO 90% OF MAXIMUM DENSITY AS DETERMINED BY THE MODIFIED AASHTO T-180 COMPACTION TEST OR 95% OF MAXIMUM DENSITY AS DETERMINED BY THE STANDARD PROCTOR TEST AASHTO T-99. ALL TEST SHALL BE VERIFIED BY A SOILS ENGINEER CONCURRENT WITH GRADING AND BACKFILLING OPERATIONS.
10. A GRADING PERMIT IS REQUIRED PRIOR TO ANY GRADING ON THE SITE.
11. THE DEVELOPER IS REQUIRED TO PROVIDE ADEQUATE STORM-WATER SYSTEMS IN ACCORDANCE WITH THE CITY OF MANCHESTER AND MSD STANDARDS.
12. ALL STORM-WATER SHALL BE DISCHARGED AT AN ADEQUATE NATURAL DISCHARGE POINT.
13. THE CONTRACTOR MUST BE ON FILE WITH THE MISSOURI ONE CALL SYSTEM 1-800-344-7483.
14. ALL PROPOSED UTILITIES ON THIS SITE MUST BE LOCATED UNDERGROUND.
15. SAFETY NOTICE TO CONTRACTOR: IN ACCORDANCE WITH GENERALLY ACCEPTED CONSTRUCTION PRACTICES, THE CONTRACTOR SHALL BE SOLELY AND COMPLETELY RESPONSIBLE FOR CONDITIONS OF THE JOB SITE, INCLUDING SAFETY OF ALL PERSONS AND PROPERTY DURING PERFORMANCE OF THE WORK. THIS REQUIREMENT WILL APPLY CONTINUOUSLY AND NOT LIMITED TO NORMAL WORKING HOURS.
16. THE CONTRACTOR SHALL BE RESPONSIBLE FOR THE RAZING AND REMOVAL OF THE EXISTING STRUCTURES, INCLUDING FOUNDATIONS, RELATED UTILITIES, PAVING, UNDERGROUND FACILITIES AND ANY OTHER EXISTING IMPROVEMENTS.
17. CONTRACTOR IS TO REMOVE AND DISPOSE OF, OFF SITE, ALL DEBRIS, RUBBISH AND OTHER MATERIALS RESULTING FROM DEMOLITION OPERATIONS.
18. THE CONTRACTOR WILL BE HELD SOLELY RESPONSIBLE AND SHALL TAKE ALL PRECAUTIONS NECESSARY TO AVOID DAMAGE TO ADJACENT PROPERTIES DURING ALL PHASES OF THIS DEMOLITION PLAN.
19. THE SITE IMPROVEMENT PLANS APPROVED BY THE CITY OF MANCHESTER DOES NOT ALLOW THE REMOVAL OR CONSTRUCTION OF ANY SANITARY OR STORM SEWER LINES WITHOUT THE PRIOR APPROVAL OR CONSENT OF MSD.
20. ALL EXCAVATIONS, GRADING, OR FILLING SHALL HAVE A FINISHED GRADE NOT TO EXCEED A 4:1 SLOPE (25 PERCENT). STEEPER GRADES MAY BE APPROVED BY THE DESIGNATED OFFICIAL IF THE EXCAVATION IS THROUGH ROCK OR THE EXCAVATION OR THE FILL IS ADEQUATELY PROTECTED (A DESIGNED HEAD WALL OR TOE WALL MAY BE REQUIRED). RETAINING WALLS THAT EXCEED A HEIGHT OF FOUR (4) FEET SHALL REQUIRE THE CONSTRUCTION OF SAFETY GUARDS AS IDENTIFIED IN THE APPROPRIATE SECTION(S) OF THE ADOPTED BOCA CODES AND MUST BE APPROVED BY THE CITY BUILDING DEPARTMENT. PERMANENT SAFETY GUARDS WILL BE CONSTRUCTED IN ACCORDANCE WITH THE APPROPRIATE SECTION(S) OF THE ADOPTED BOCA CODES.
21. ALL FILLED PLACES IN PROPOSED ROADS SHALL BE COMPACTED FROM THE BOTTOM OF THE FILL UP TO 90% MAXIMUM DENSITY AS DETERMINED BY THE MODIFIED AASHTO T-180 COMPACTION TEST OR 95% OF MAXIMUM DENSITY AS DETERMINED BY THE STANDARD PROCTOR TEST ASSHTO T-99. A SOIL'S ENGINEER SHALL VERIFY ALL TESTS CONCURRENT WITH GRADING AND BACKFILLING OPERATIONS. A SEALED COPY OF THE RESULT REPORTS SHALL BE GIVEN TO THE CITY OF MANCHESTER CONSTRUCTION INSPECTOR.
22. ALL PUBLIC ROADS MUST BE KEPT CLEAR OF MUD AND DEBRIS AT ALL TIMES. FAILURE TO DO SO WILL BE CAUSE FOR THE CITY TO SUSPEND WORK.
23. WHERE NATURAL VEGETATION IS REMOVED DURING GRADING, VEGETATION SHALL BE REESTABLISHED IN SUCH A DENSITY AS TO PREVENT EROSION. PERMANENT SOD SHALL BE ESTABLISHED AS SOON AS POSSIBLE.
24. WHEN GRADING OPERATIONS ARE COMPLETED OR SUSPENDED FOR MORE THAN 30 DAYS, PERMANENT GRASS MUST BE ESTABLISHED AT SUFFICIENT DENSITY TO PROVIDE EROSION CONTROL ON THE SITE. BETWEEN PERMANENT GRASS SEEDING PERIODS, TEMPORARY COVER SHALL BE PROVIDED ACCORDING TO THE DESIGNATED OFFICIAL'S RECOMMENDATION.
25. ALL FINISHED GRADES (AREAS NOT TO BE DISTURBED BY FUTURE IMPROVEMENT) IN EXCESS OF 20% SLOPES (5:1) SHALL BE MULCHED AND TACKED AT THE RATE OF 100 POUNDS PER 1,000 SQUARE FEET WHEN SEEDED.
26. RUNOFF WATER FROM DEVELOPED AREAS (PARKING LOTS, PAVED SITES, AND BUILDINGS) ABOVE THE AREA TO DEVELOP SHALL BE DIRECTED TO DIVERSIONS, DETENTION BASINS, CONCRETE GUTTERS AND/OR UNDERGROUND OUTLET SYSTEMS. SUFFICIENTLY ANCHORED STRAW BALES MAY BE TEMPORARILY SUBSTITUTED WITH THE APPROVAL OF THE DESIGNATED OFFICIAL.
27. ALL CONSTRUCTION METHODS AND PRACTICES TO CONFORM WITH OSHA STANDARDS.
28. CONTRACTOR SHALL BID THESE PLANS AND SPECIFICATIONS IN THEIR ENTIRETY (COMPLETE SETS).
29. OMISSIONS FROM THE DRAWINGS OR SPECIFICATIONS OR THE MISDESCRIPTION OF DETAILS OF WORK THAT ARE MANIFESTLY NECESSARY TO CARRY OUT THE INTENT OF THE DRAWINGS AND SPECIFICATIONS, OR THAT ARE CUSTOMARILY PERFORMED, SHALL NOT RELIEVE THE CONTRACTOR FROM PERFORMING SUCH OMITTED OR MISDESCRIBED DETAILS OF THE WORK. THE CONTRACTOR SHALL PERFORM SUCH DETAILS AS IF FULLY AND CORRECTLY SET FORTH AND DESCRIBED IN THE DRAWINGS AND SPECIFICATIONS.

STORM SEWER NOTES

1. ALL STORM AND SANITARY SEWER STRUCTURES AND APPURTENANCES TO BE DEDICATED TO MSD, OR TO BE PRIVATE UNDER MSD INSPECTION, SHALL CONFORM TO THE METROPOLITAN ST. LOUIS SEWER DISTRICT, STANDARD CONSTRUCTION SPECIFICATIONS FOR SEWERS AND DRAINAGE FACILITIES, 2023. THAT WILL INCLUDE STANDARD DETAILS SHOWN THEREIN, AND SHALL INCLUDE ALL SUBSEQUENT CHANGES MADE THERETO.
2. FOR SEWER PIPE (STORM, SANITARY, OR COMBINED) WITH A DESIGN GRADE LESS THAN ONE PERCENT (1%), VERIFICATION OF THE PIPE GRADE WILL BE REQUIRED FOR EACH INSTALLED REACH OF SEWER, PRIOR TO ANY SURFACE RESTORATION OR INSTALLATION OF ANY SURFACE IMPROVEMENTS. THE CONTRACTOR'S FIELD SUPERVISOR WILL BE REQUIRED TO PROVIDE DAILY DOCUMENTATION VERIFYING THAT THE AS-BUILT PIPE GRADE MEETS THE DESIGN GRADE THROUGH THE SUBMITTAL OF SIGNED CUT SHEETS TO THE MSD INSPECTOR UPON REQUEST. FIELD SURVEYED VERIFICATION MUST BE MADE UNDER THE DIRECTION OF A LICENSED LAND SURVEYOR OR REGISTERED ENGINEER. THE CONTRACTOR WILL BE REQUIRED TO REMOVE AND REPLACE ANY SEWER REACH HAVING AN AS-BUILT GRADE WHICH IS FLATTER THAN THE DESIGN GRADE BY MORE THAN 0.1%. SEWER WITH GRADES GREATER THAN THE DESIGN SLOPE MAY BE LEFT IN PLACE, PROVIDED NO OTHER SEWER GRADE IS REDUCED BY THIS VARIANCE IN THE AS-BUILT GRADE. MSD ALSO RESERVES THE RIGHT TO REQUIRE THE CONTRACTOR TO REMOVE AND REPLACE ANY SEWER (AT ANY TIME PRIOR TO CONSTRUCTION APPROVAL) FOR WHICH THE AS-BUILT GRADE DOES NOT COMPLY WITH THE GRADE TOLERANCE STATED IN THE ABOVE PARAGRAPH. THE SEWER CONTRACTOR SHALL BE RESPONSIBLE FOR ANY COSTS ASSOCIATED WITH THE FIELD VERIFICATION OF THE SEWER GRADE, OR REMOVAL AND REPLACEMENT OF THE SEWER PIPE OR ASSOCIATED APPURTENANCES.
3. MAINTENANCE OF THE SEWERS DESIGNATED AS "PUBLIC" SHALL BE THE RESPONSIBILITY OF THE METROPOLITAN ST. LOUIS SEWER DISTRICT UPON DEDICATION OF THE SEWERS TO THE DISTRICT.
4. IT SHALL BE THE CONTRACTOR'S RESPONSIBILITY TO FIELD VERIFY THE EXACT HORIZONTAL AND VERTICAL LOCATIONS AND SIZES OF ALL EXISTING UTILITIES, WHETHER SHOWN OR NOT SHOWN ON THIS PLAN, PRIOR TO THE START OF ANY CONSTRUCTION. THE ENGINEER HAS NOT FIELD VERIFIED THE EXISTING UTILITIES. THE UTILITIES SHOWN ON THIS PLAN HAVE BEEN TAKEN FROM RECORDS AND UTILITY MAPS MADE AVAILABLE TO THE ENGINEER AND THE LOCATIONS AND SIZES SHALL BE CONSIDERED APPROXIMATE ONLY. OTHER UTILITIES, NOT SHOWN ON THIS PLAN, MAY EXIST ON OR NEAR THE SITE
5. ALL FILL AREAS, INCLUDING TRENCH BACKFILLS, UNDER BUILDINGS, PROPOSED STORM AND SANITARY SEWER LINES, AND PAVED AREAS SHALL BE COMPACTED TO A MINIMUM OF 90 PERCENT OF "MODIFIED PROCTOR". FILL IS TO BE PLACED IN A MAXIMUM OF 9-INCH LIFTS. TESTS SHALL BE TAKEN AT A MAXIMUM OF 50-FOOT INTERVALS ALONG THE ROUTE OF THE PIPE; AT A MAXIMUM OF 2-FOOT VERTICALLY; AND LATERALLY ON EACH SIDE OF THE PIPE, AT A DISCHARGE EQUAL TO THE DEPTH OF FILL OVER THE PIPE. A COPY OF THESE RESULTS WILL BE SUBMITTED TO MSD PRIOR TO CONSTRUCTION APPROVAL.
6. ALL FILLED PLACES IN PROPOSED ROADS SHALL BE COMPACTED FROM THE BOTTOM OF THE FILL 90% MAXIMUM DENSITY AS DETERMINED BY THE MODIFIED AASHTO T-180 COMPACTION UP TO 95% OF MAXIMUM DENSITY AS DETERMINED BY THE STANDARD PROCTOR TEST AASHTO T-99 . ALL TESTS SHALL BE VERIFIED BY A SOILS ENGINEER CONCURRENT WITH GRADING AND BACKFILLING OPERATIONS PER GEOTECHNICAL REPORT.
7. TYPE "C" BEDDING PER M.S.D. STANDARDS IS REQUIRED FOR ALL PIPES IN ROCK EXCEPT AS NOTED.
8. ALL TRENCHES IN AREAS TO BE PAVED AND UNDER EXISTING PAVEMENT OR WITHIN PUBLIC R.O.W. SHALL BE GRANULARLY BACKFILLED WITH 3/4-INCH MINUS CRUSHED LIMESTONE IN ACCORDANCE WITH 2023 M.S.D. STANDARDS.
9. THE SOILS ENGINEER WILL VERIFY THAT ALL COMPRESSIBLE MATERIAL HAS BEEN REMOVED PRIOR TO FILL PLACEMENT AND THAT ALL FILL UNDER STORM AND SANITARY SEWER LINES CONSTRUCTED ABOVE ORIGINAL GRADE, HAS BEEN COMPACTED TO 90% OF "MODIFIED PROCTOR". FILL IS TO BE PLACED IN A MAXIMUM 9" LIFTS. TESTS SHALL BE TAKEN AT A MAXIMUM OF 50' INTERVALS ALONG THE ROUTE OF THE PIPE, AT A MAXIMUM OF 2' VERTICAL, AND LATERALLY ON EACH SIDE OF THE PIPE, AT A DISTANCE EQUAL TO THE DEPTH OF FILL OVER THE PIPE. A COPY OF THESE RESULTS WILL BE SUBMITTED TO M.S.D. PRIOR TO CONSTRUCTION.
10. ANY ABANDONED SEWERS SHALL BE REMOVED OR COMPLETELY GROUT FILLED.
11. THE REMOVAL AND REPLACEMENT, OR REHABILITATION OF THE EXISTING STRUCTURE WILL BE DETERMINED BY THE MSD FIELD INSPECTOR. IF THE STRUCTURE IS DETERMINED TO REMAIN IN PLACE, THEN THE TOP SHALL BE ADJUSTED TO GRADE, IF NEEDED.
12. STORMWATER SHALL BE DISCHARGED AT AN ADEQUATE NATURAL DISCHARGE POINT. SINKHOLES ARE NOT DISCHARGE POINTS.
13. PRIOR TO OBTAINING A CONSTRUCTION PERMIT FROM THE METROPOLITAN ST. LOUIS SEWER DISTRICT, THE CONTRACTOR SHALL BE REQUIRED TO PROVIDE THE DISTRICT WITH A COPY OF AN EXECUTED CERTIFICATE OF INSURANCE INDICATING THAT THE PERMITTEE HAS OBTAINED AND WILL CONTINUE TO CARRY COMMERCIAL GENERAL LIABILITY AND COMPREHENSIVE AUTO LIABILITY INSURANCE. THE REQUIREMENTS AND LIMITS SHALL BE AS STATED IN THE "RULES AND REGULATIONS AND ENGINEERING DESIGN REQUIREMENTS FOR SANITARY AND STORMWATER DRAINAGE FACILITIES." SECTION 10-090 (ADDENDUM).
14. PIPE JOINTS WITH ADAPTERS AND COUPLINGS SHALL BE SUPPLIED AND INSTALLED WITH 316 STAINLESS STEEL NUT AND BOLT CLAMPS (T-BOLT) CONFIGURATION; AND WITH STAINLESS STEEL SHEAR BANDS, BEING A MINIMUM OF TWELVE (12) MILS (MSD STD. CONST SPECS. PT. 2, SUBSECTION H11). WORM DRIVE HOSE CLAMPS AND CONCRETE BACKFILLING (CAUSTICITY) WILL NO LONGER BE ALLOWED AT THOSE JOINTS. GRANULAR BACKFILL SHOULD BE USED. IF FLOWABLE FILL IS REQUIRED, THE CONTRACTOR SHALL WRAP AND TAPE THE ADAPTERS AND COUPLINGS WITH A SIX (6) MIL POLYETHYLENE SHEET.
15. TRENCH BACKFILL COMPACTION AND TESTING REQUIREMENTS: THE CONTRACTOR IS TO REFER TO PART 4, SECTION H OF THE METROPOLITAN ST. LOUIS SEWER DISTRICT, STANDARD CONSTRUCTION SPECIFICATIONS FOR SEWERS AND DRAINAGE FACILITIES, 2023 EDITION, TO ESTABLISH THE REQUIREMENTS FOR THE SPECIFIC TYPE OF BACKFILL BEING USED.

bond architects
222 SOUTH CENTRAL AVE.
SUITE# 501
ST. LOUIS, MO 63105
TEL: 314.863.4994
FAX: 314.863.4996
www.bondarchitectsinc.com
Bond Architects, Inc.
Missouri State Certificate of Authority # 2009027409

Cole & Associates, Inc.
Civil Engineer
Project Number: 26-0052
Certificate of Authority #001165
401 S. 18th Street, Suite 200
St Louis, MO 63103
314.984.9887 tel

RTM Engineering Consultants
MEP / FP Engineer
Project Number: 26.B00203.1928
Certificate of Authority #2002028690
3701 Lindbergh Blvd.
St Louis, MO 63127
314.725.5889 tel

PINCHIN, LLC
Asbestos Abatement Consultant
Project Number: R262.00457.003
Certificate of Authority #
2 Cityplace Drive, Suite 195,
St. Louis, Missouri 63141
314.230.0182 tel

Barretts Elementary School
1780 CARMAN RD., MANCHESTER, MO 63021
Parkway Project #: PN012501B
BUILDING RENOVATION & SITE IMPROVEMENTS

Parkway School District
363 N. Woods Mill Rd.,
Chesterfield, MO 63017
314.415.8231 tel

Project No: 26016

Revisions

Description	Date

This drawing and the details on it are the sole property of the architect and may be used for this specific project only. It shall not be loaned, copied or reproduced, in whole or in part, or for any other purpose or project without the written consent of the Architect. Copyright © 2023 by Bond Architects, Inc.

STATE OF MISSOURI
STANLEY EARL FOWLER JR.
NUMBER PE-2020000037
PROFESSIONAL ENGINEER

CIVIL ENGINEERS
CORPORATE ENGINEERING CERTIFICATE #001165

STANLEY EARL FOWLER, JR.
CIVIL ENGINEER
PE NO: PE-2020000037

11/12/2026

The Professional Architects seal affixed to this sheet applies only to the material and items shown on this sheet. All drawings, instruments or other documents not exhibiting this seal shall not be considered prepared by this architect, and this architect expressly disclaims any and all responsibility for such plan, drawings or documents not exhibiting this seal.

DATE: 11/12/2026

BID/ PERMIT SET

SPECIFICATION SHEET

C2.0



50' 0' 50' 100'

SCALE: 1" = 50'

SCALE: 3" = 1'-0" | 1" | 0.5" | 0.25" | 0

SCALE: 1 1/2" = 1'-0" | 2" | 1" | 0.5" | 0

SCALE: 1" = 1'-0" | 2" | 1" | 0.5" | 0

SCALE: 3/4" = 1'-0" | 3" | 2" | 1" | 0

SCALE: 1/2" = 1'-0" | 4" | 2" | 1" | 0

SCALE: 1/4" = 1'-0" | 8" | 4" | 2" | 0

SCALE: 1/8" = 1'-0" | 16" | 8" | 4" | 0

SCALE: 1/16" = 1'-0" | 32" | 16" | 8" | 0

USER: Patrick Barry TAB: C3.0
DATE: November 5, 2026 - 2:21:09 PM
DRAWING: S:\JOBS\Jobs2026\26-0052\CADD\C-Plan\PlotSheets\0_PLAN_EXISTING CONDITIONS_26-0052.dwg

bond architects
222 SOUTH CENTRAL AVE.
SUITE# 501
ST. LOUIS, MO 63105
TEL: 314.863.4994
FAX: 314.863.4996
www.bondarchitectsinc.com
Bond Architects, Inc.
Missouri State Certificate of Authority # 2009027409

Cole & Associates, Inc.
Civil Engineer
Project Number: 26-0052
Certificate of Authority #001165
401 S. 18th Street, Suite 200
St Louis, MO 63103
314.984.9887 tel

RTM Engineering Consultants
MEP / FP Engineer
Project Number: 26.B00203.1928
Certificate of Authority #2002028690
3701 Lindbergh Blvd.
St Louis, MO 63127
314.725.5889 tel

PINCHIN, LLC
Asbestos Abatement Consultant
Project Number: R262.00457.003
Certificate of Authority #
2 Cityplace Drive, Suite 195,
St. Louis, Missouri 63141
314.230.0182 tel

Barretts Elementary School

1780 CARMAN RD., MANCHESTER, MO 63021
Parkway Project #: PN012501B
BUILDING RENOVATION & SITE IMPROVEMENTS

Parkway School District
363 N. Woods Mill Rd.,
Chesterfield, MO 63017
314.415.8231 tel

Project No: 26016

Revisions

Description	Date

This drawing and the details on it are the sole property of the architect and may be used for this specific project only. It shall not be loaned, copied or reproduced, in whole or in part, or for any other purpose or project without the written consent of the Architect.
Copyright © 2023 by Bond Architects, Inc.

CIVIL ENGINEERS

STATE OF MISSOURI
STANLEY EARL FOWLER JR.
NUMBER PE-2020000037
PROFESSIONAL ENGINEER

CORPORATE ENGINEERING CERTIFICATE #001165

STANLEY EARL FOWLER, JR.
CIVIL ENGINEER
PE NO: PE-2020000037

11/12/2026

The Professional Architects seal affixed to this sheet applies only to the material and items shown on this sheet. All drawings, instruments or other documents not exhibiting this seal shall not be considered prepared by this architect, and this architect expressly disclaims any and all responsibility for such plan, drawings or documents not exhibiting this seal.

DATE: 11/12/2026

BID/ PERMIT SET

OVERALL EXISTING CONDITIONS

C3.0

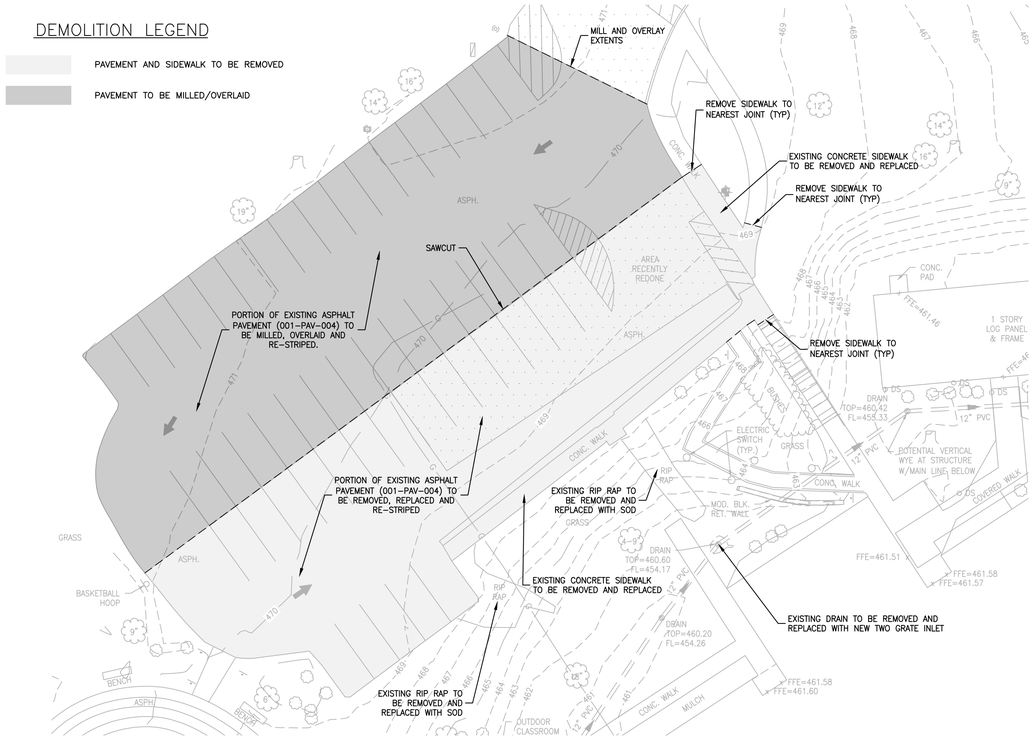

1 NORTH PARKING LOT - DEMOLITION PLAN

SCALE: 1"=20'

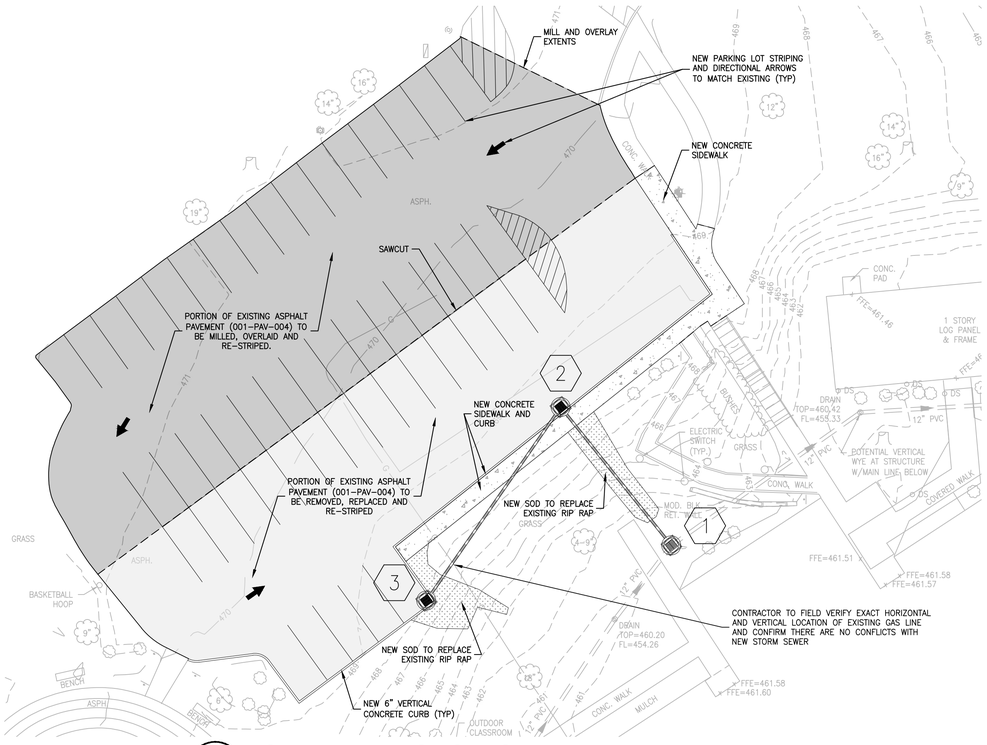

2 NORTH PARKING LOT - SITE AND UTILITY PLAN

SCALE: 1"=20'

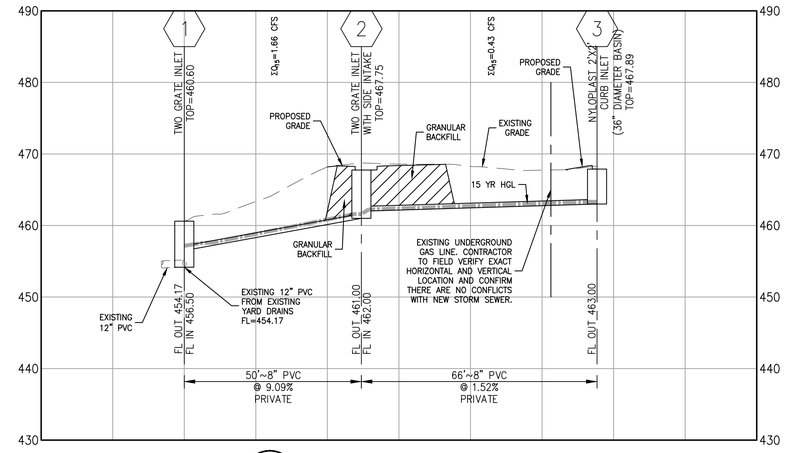

3 STORM PROFILE 1-3

SCALE: 1"=20' HORIZ. 1"=10' VERT.

15 YR, 20 MIN STORM HYDRAULICS

Line ID	Line Size	Line Length	Line Slope	Manning's n	Bend Angle	Added Flow	Cumulative Flow Rate	Capacity (Full Flow)	Velocity (Out)	Invert (Start)	Ground Elevation (Start)	HGL (In)	Freeboard	Invert (Stop)	Ground Elevation (Stop)	HGL (Out)
	(in)	(ft)	(%)		(Deg)	(cfs)	(cfs)	(cfs)	(ft/s)	(ft)	(ft)	(ft)	(ft)	(ft)	(ft)	(ft)
2-1	8	49.50	9.09	0.012	-128.64	1.23	1.66	3.94	4.76	461.00	467.75	461.59	6.16	456.50	460.60	457.17
3-2	8	65.84	1.52	0.012	-106.59	0.43	0.43	1.61	3.91	463.00	467.89	463.31	4.58	462.00	467.75	462.24

100 YR, 20 MIN STORM HYDRAULICS

Line ID	Line Size	Line Length	Line Slope	Manning's n	Bend Angle	Added Flow	Cumulative Flow Rate	Capacity (Full Flow)	Velocity (Out)	Invert (Start)	Ground Elevation (Start)	HGL (In)	Freeboard	Invert (Stop)	Ground Elevation (Stop)	HGL (Out)
	(in)	(ft)	(%)		(Deg)	(cfs)	(cfs)	(cfs)	(ft/s)	(ft)	(ft)	(ft)	(ft)	(ft)	(ft)	(ft)
2-1	8	49.50	9.09	0.012	-128.64	1.65	2.23	3.94	6.39	461.00	467.75	461.64	6.11	456.50	460.60	457.17
3-2	8	65.84	1.52	0.012	-106.59	0.58	0.58	1.61	4.24	463.00	467.89	463.36	4.53	462.00	467.75	462.28

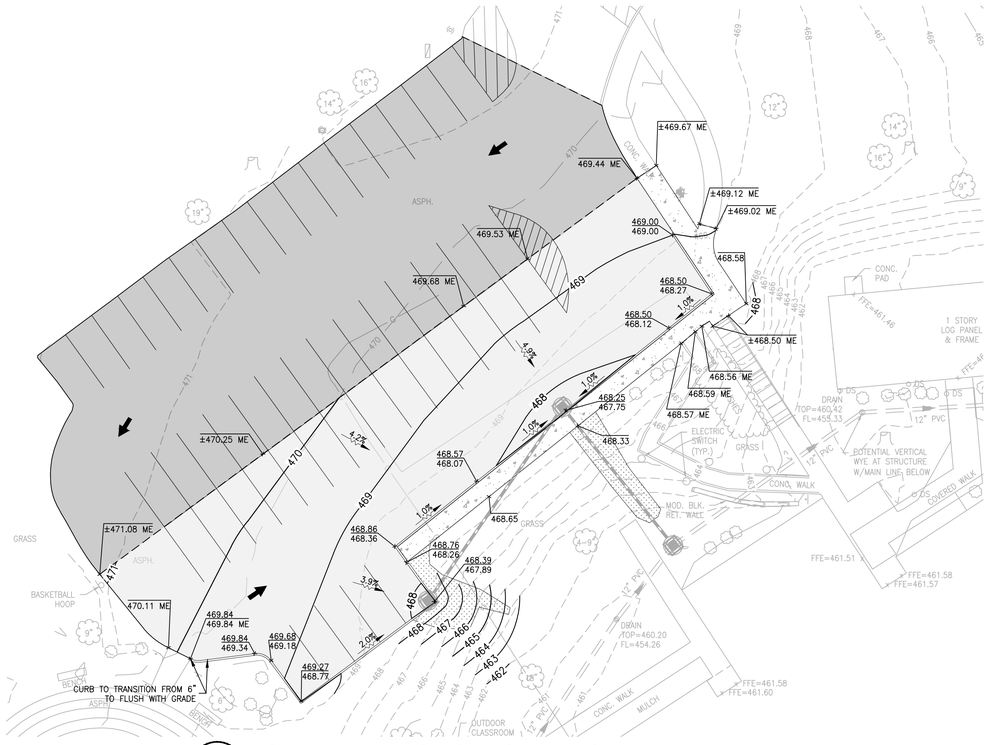

4 NORTH PARKING LOT - GRADING PLAN

SCALE: 1"=20'

20' 0' 20' 40'

SCALE: 1" = 20'

bond architects
222 SOUTH CENTRAL AVE.
SUITE# 501
ST. LOUIS, MO 63105
TEL: 314.863.4994
FAX: 314.863.4996
www.bondarchitectsinc.com
Bond Architects, Inc.
Missouri State Certificate of Authority # 2009027409

Cole & Associates, Inc.
Civil Engineer
Project Number: 26-0052
Certificate of Authority #001165
401 S. 18th Street, Suite 200
St Louis, MO 63103
314.984.9887 tel

RTM Engineering Consultants
MEP / FP Engineer
Project Number: 26.B00203.1928
Certificate of Authority #2002028690
3701 Lindbergh Blvd.
St Louis, MO 63127
314.725.5889 tel

PINCHIN, LLC
Asbestos Abatement Consultant
Project Number: R262.00457.003
Certificate of Authority #
2 Cityplace Drive, Suite 195,
St. Louis, Missouri 63141
314.230.0182 tel

Barretts Elementary School
1780 CARMAN RD., MANCHESTER, MO 63021
Parkway Project #: PN012501B
BUILDING RENOVATION & SITE IMPROVEMENTS

Parkway School District
363 N. Woods Mill Rd.,
Chesterfield, MO 63017
314.415.8231 tel

Project No: 26016

Revisions

Description	Date

This drawing and the details on it are the sole property of the architect and may be used for this specific project only. It shall not be loaned, copied or reproduced, in whole or in part, or for any other purpose or project without the written consent of the Architect.
Copyright © 2023 by Bond Architects, Inc.

CIVIL ENGINEERS
CORPORATE ENGINEERING CERTIFICATE #001165

STANLEY EARL FOWLER, JR.
CIVIL ENGINEER
PE NO: PE-2020000037
11/12/2026

The Professional Architects seal affixed to this sheet applies only to the material and items shown on this sheet. All drawings, instruments or other documents not exhibiting this seal shall not be considered prepared by this architect, and this architect expressly disclaims any and all responsibility for such plan, drawings or documents not exhibiting this seal.

DATE: 11/12/2026

BID/ PERMIT SET

DEMO, SITE, UTILITY AND GRADING PLAN (NORTH)

C4.0

USER: Patrick.Barry TAB: C4.0
DATE: November 5, 2026 - 2:21:16 PM
DRAWING: S:\JOBS\Jobs2026\26-0052\CAD\D-C-Plan\PlotSheets\D_PLAN_SITE_26-0052.dwg

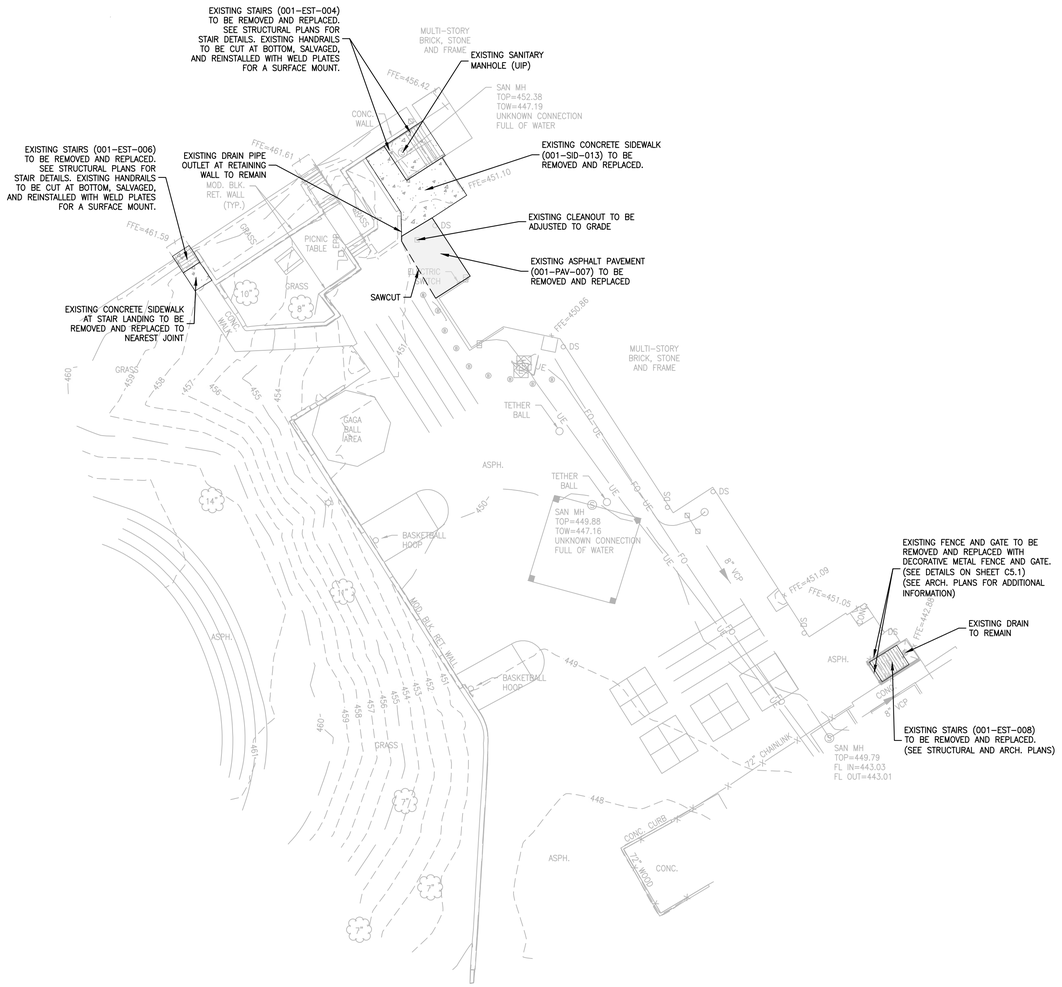

1 DEMO, SITE & UTILITY PLAN - SOUTH

SCALE: 1"=20'



2 GRADING PLAN - SOUTH

SCALE: 1"=20'

20' 0' 20' 40'

SCALE: 1" = 20'

bond architects
222 SOUTH CENTRAL AVE.
SUITE# 501
ST. LOUIS, MO 63105
TEL: 314.863.4994
FAX: 314.863.4996
www.bondarchitectsinc.com
Bond Architects, Inc.
Missouri State Certificate of Authority # 2009027409

Cole & Associates, Inc.
Civil Engineer
Project Number: 26-0052
Certificate of Authority #001165
401 S. 18th Street, Suite 200
St Louis, MO 63103
314.984.9887 tel

RTM Engineering Consultants
MEP / FP Engineer
Project Number: 26.B00203.1928
Certificate of Authority #2002028690
3701 Lindbergh Blvd.
St Louis, MO 63127
314.725.5889 tel

PINCHIN, LLC
Asbestos Abatement Consultant
Project Number: R262.00457.003
Certificate of Authority #
2 Cityplace Drive, Suite 195,
St. Louis, Missouri 63141
314.230.0182 tel

Barretts Elementary School

1780 CARMAN RD., MANCHESTER, MO 63021
Parkway Project #: PN012501B
BUILDING RENOVATION & SITE IMPROVEMENTS

Parkway School District
363 N. Woods Mill Rd.,
Chesterfield, MO 63017
314.415.8231 tel

Project No: 26016

Revisions

Description	Date

This drawing and the details on it are the sole property of the architect and may be used for this specific project only. It shall not be loaned, copied or reproduced, in whole or in part, or for any other purpose or project without the written consent of the Architect.
Copyright © 2023 by Bond Architects, Inc.

CIVIL ENGINEERS

STATE OF MISSOURI
STANLEY EARL FOWLER JR.
NUMBER PE-2020000037
PROFESSIONAL ENGINEER

CORPORATE ENGINEERING CERTIFICATE #001165

STANLEY EARL FOWLER, JR.
CIVIL ENGINEER
PE NO: PE-2020000037

11/12/2026

The Professional Architects seal affixed to this sheet applies only to the material and items shown on this sheet. All drawings, instruments or other documents not exhibiting this seal shall not be considered prepared by this architect, and this architect expressly disclaims any and all responsibility for such plan, drawings or documents not exhibiting this seal.

DATE: 11/12/2026

BID/ PERMIT SET

DEMO, SITE, UTILITY AND GRADING PLAN (SOUTH)

C4.1

SCALE: 3" = 1'-0" 0 0.25' 0.5' 1'
SCALE: 1 1/2" = 1'-0" 0 0.5' 1' 2'
SCALE: 1" = 1'-0" 0 0.5' 1' 2'
SCALE: 3/4" = 1'-0" 0 1' 2' 3'
SCALE: 1/2" = 1'-0" 0 1' 2' 4'
SCALE: 1/4" = 1'-0" 0 2' 4' 8'
SCALE: 1/8" = 1'-0" 0 4' 8' 16'
SCALE: 1/16" = 1'-0" 0 8' 16' 32'

USER: Patrick Barry TAB: C4.1
DATE: November 5, 2026 - 2:21:17 PM
DRAWING: S:\JOBS\Jobs2026\26-0052\CAD\C-Plan\PlotSheets\0_PLAN_SITE_26-0052.dwg

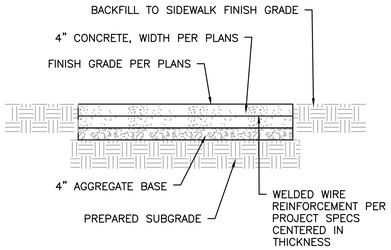

1 CONCRETE SIDEWALK

SCALE: N.T.S. **REF. DWG. C4.0, C4.1**

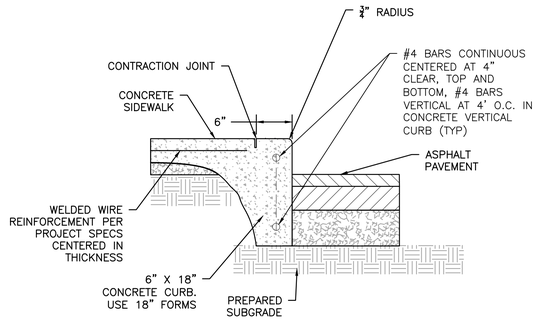

NOTE:
PROVIDE ½" EXPANSION JOINT SIMILAR CONCRETE EXPANSION JOINT, FULL DEPTH OF CURB, MAXIMUM SPACING AT 20'–0" ON CENTER OR PER PLAN.

2 COMBINED CURB/SIDEWALK

SCALE: N.T.S. **REF. DWG. C4.0**

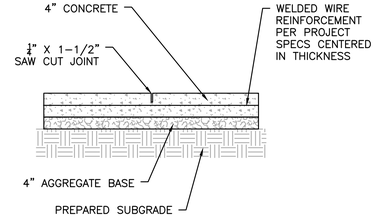

NOTE:
MAXIMUM SPACING EQUALS WIDTH OF SIDEWALK OR PER PLANS

3 CONCRETE CONTRACTION JOINT

SCALE: N.T.S. **REF. DWG. C4.0, C4.1**

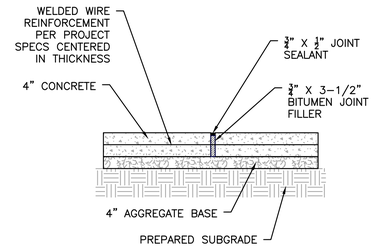

NOTE:
MAXIMUM SPACING EQUALS 20'–0" ON CENTER OR PER PLANS

4 CONCRETE EXPANSION JOINT

SCALE: N.T.S. **REF. DWG. C4.0, C4.1**

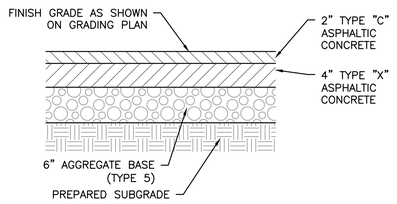

NOTE:
PAVEMENT DETAILS SHOWN FOR REFERENCE ONLY. CONTRACTOR TO VERIFY FINAL PAVEMENT REQUIREMENTS WITH GEOTECH REPORT AND/OR OWNER.

5 ASPHALT PAVEMENT

SCALE: N.T.S. **REF. DWG. C4.0, C4.1**

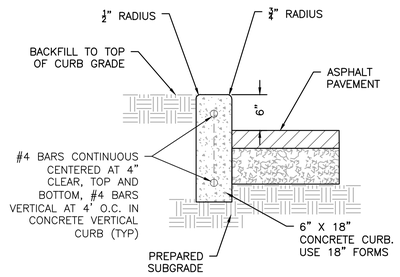

NOTE:
PROVIDE ½" EXPANSION JOINT SIMILAR CONCRETE EXPANSION JOINT, FULL DEPTH OF CURB, MAXIMUM SPACING AT 20'–0" ON CENTER OR PER PLAN.

6 VERTICAL CONCRETE CURB

SCALE: N.T.S. **REF. DWG. C4.0**

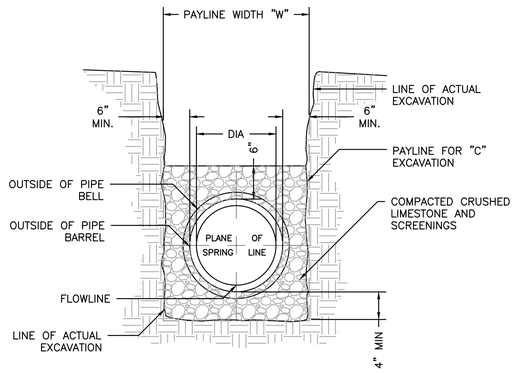

7 PVC PIPE BEDDING DETAIL

SCALE: N.T.S. **REF. DWG. C4.0**

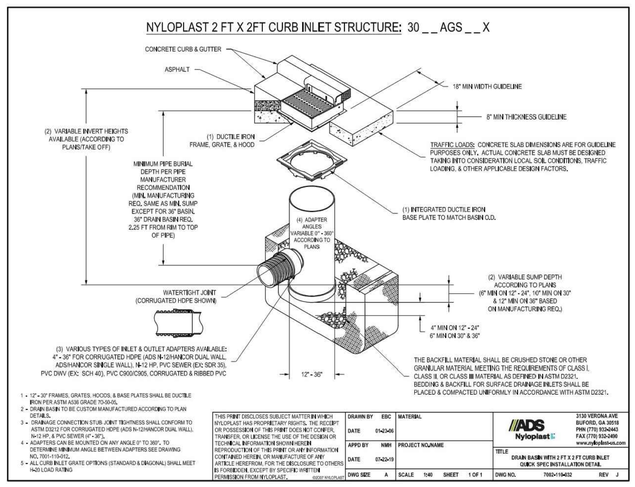

8 NYLOPLAST 2'X2' CURB INLET DETAIL

SCALE: N.T.S. **REF. DWG. C4.0**

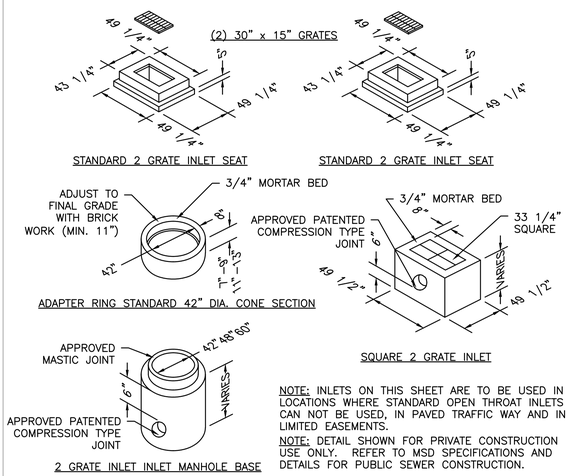

NOTE: INLETS ON THIS SHEET ARE TO BE USED IN LOCATIONS WHERE STANDARD OPEN THROAT INLETS CAN NOT BE USED, IN PAVED TRAFFIC WAY AND IN LIMITED EASEMENTS.
NOTE: DETAIL SHOWN FOR PRIVATE CONSTRUCTION USE ONLY. REFER TO MSD SPECIFICATIONS AND DETAILS FOR PUBLIC SEWER CONSTRUCTION.

9 TWO GRATE INLET DETAIL

SCALE: N.T.S. **REF. DWG. C4.0**

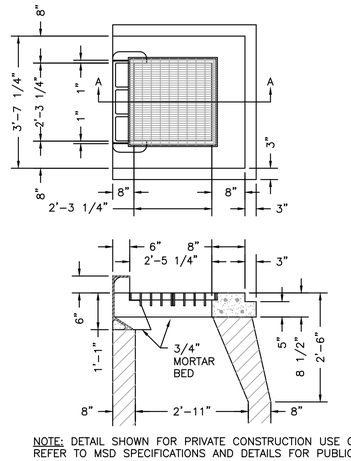

NOTE: DETAIL SHOWN FOR PRIVATE CONSTRUCTION USE ONLY. REFER TO MSD SPECIFICATIONS AND DETAILS FOR PUBLIC SEWER CONSTRUCTION.

10 GRATE INLET WITH SIDE INTAKE DETAIL

SCALE: N.T.S. **REF. DWG. C4.0**

bond architects
222 SOUTH CENTRAL AVE.
SUITE# 501
ST. LOUIS, MO 63105
TEL: 314.863.4994
FAX: 314.863.4996
www.bondarchitectsinc.com
Bond Architects, Inc.
Missouri State Certificate of Authority # 2009027409

Cole & Associates, Inc.
Civil Engineer
Project Number: 26-0052
Certificate of Authority #001165
401 S. 18th Street, Suite 200
St Louis, MO 63103
314.984.9887 tel

RTM Engineering Consultants
MEP / FP Engineer
Project Number: 26.B00203.1928
Certificate of Authority #2002028690
3701 Lindbergh Blvd.
St Louis, MO 63127
314.725.5889 tel

PINCHIN, LLC
Asbestos Abatement Consultant
Project Number: R262.00457.003
Certificate of Authority #
2 Cityplace Drive, Suite 195,
St. Louis, Missouri 63141
314.230.0182 tel

Barretts Elementary School

1780 CARMAN RD., MANCHESTER, MO 63021
Parkway Project #: PN012501B
BUILDING RENOVATION & SITE IMPROVEMENTS

Parkway School District
363 N. Woods Mill Rd.,
Chesterfield, MO 63017
314.415.8231 tel

Project No: 26016

Revisions

Description	Date

This drawing and the details on it are the sole property of the architect and may be used for this specific project only. It shall not be loaned, copied or reproduced, in whole or in part, or for any other purpose or project without the written consent of the Architect.
Copyright © 2023 by Bond Architects, Inc.

STATE OF MISSOURI — STANLEY EARL FOWLER JR. — NUMBER PE-2020000037 — PROFESSIONAL ENGINEER
CIVIL ENGINEERS
CORPORATE ENGINEERING CERTIFICATE #001165
STANLEY EARL FOWLER, JR.
CIVIL ENGINEER
PE NO: PE–2020000037
11/12/2026

The Professional Architects seal affixed to this sheet applies only to the material and items shown on this sheet. All drawings, instruments or other documents not exhibiting this seal shall not be considered prepared by this architect, and this architect expressly disclaims any and all responsibility for such plan, drawings or documents not exhibiting this seal.

DATE: 11/12/2026

BID/ PERMIT SET

DETAIL SHEET

C5.0

USER: Patrick Barry TAB: C5.0 DETAIL SHEET
DATE: November 5, 2026 – 2:21:19 PM
DRAWING: S:\JOBS\Jobs2026\26-0052\CAD\VC-Prion\PlotSheets\0_IPLAN_DETAIL_26-0052.dwg

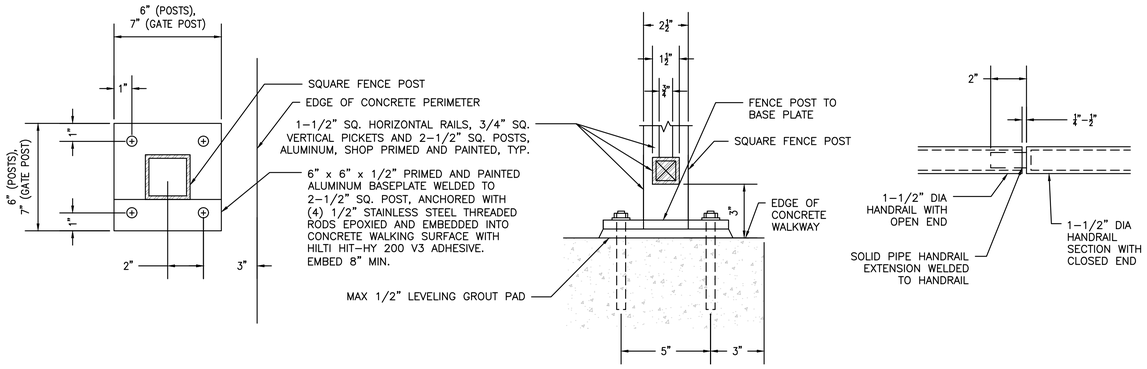

NOTE: 48" HIGH DECORATIVE METAL FENCE GUARDRAIL SURROUND AT NEW STAIR. TO COMPLY WITH ALL APPLICABLE CODES AND ADA GUIDELINES. MOUNT GUARDRAIL POSTS ONTO BASEPLATES ON TOP OF CONCRETE RETAINING WALL. PROVIDE ADEQUATE ATTACHMENT FOR GUARDRAIL LOADING REQUIREMENTS PER CODES.

NOTE: CONTRACTOR TO COORDINATE WITH ARCH. PLANS FOR ADDITIONAL INFORMATION.

1 DECORATIVE METAL FENCE

SCALE: N.T.S.

REF. DWG. C4.1

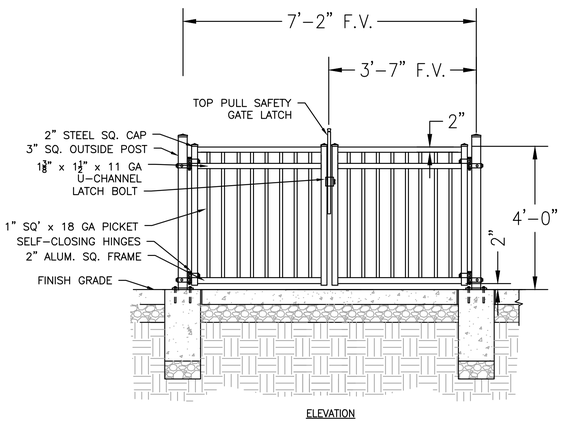

ELEVATION

HARDWARE SCHEDULE

HARDWARE	PRODUCT
SELF–CLOSE HINGE	TRUCLOSE HEAVY DUTY FOR METAL GATES, D&D TECHNOLOGIES. ADJUSTABLE TENSION.
LOCKABLE PULL GATE LATCH	LOCKABLE MAGNA–LATCH S3 TOP PULL SAFETY GATE LATCH, KEYED ALIKE, COLOR: BLACK

NOTES:
1. PROVIDE THE BASIS OF DESIGN PRODUCTS LISTED ABOVE OR ARCHITECT ACCEPTED EQUAL PRODUCTS THAT MEET THE SALIENT CHARACTERISTICS IDENTIFIED IN THE CONSTRUCTION DOCUMENTS.
2. PROVIDE SHOP DRAWINGS FOR ALL FENCE, GATE AND GATE LATCHING COMPONENTS FOR REVIEW AND APPROVAL BY ARCHITECT PRIOR TO INITIATING FENCE PURCHASE.
3. FENCE, GATE, HARDWARE AND ACCESSORIES COLOR: BLACK.
4. FENCE GATE POSTS AND CORNER POSTS TO BE WELDED TO PRIMED AND PAINTED BASE PLATE, ANCHORED WITH ST. STL. THREADED RODS EPOXIED AND EMBEDDED IN CONCRETE. SEE POST ANCHOR PLATE AND POST ANCHOR SECTION DETAILS.
5. 48" HIGH DECORATIVE METAL FENCE GUARDRAIL SURROUND AT NEW STAIR. TO COMPLY WITH ALL APPLICABLE CODES AND ADA GUIDELINES. MOUNT GUARDRAIL POSTS ONTO BASEPLATES ON TOP OF CONCRETE RETAINING WALL. PROVIDE ADEQUATE ATTACHMENT FOR GUARDRAIL LOADING REQUIREMENTS PER CODES.
6. CONTRACTOR TO COORDINATE WITH ARCH. PLANS FOR ADDITIONAL INFORMATION.

2 DECORATIVE FENCE GATE

SCALE: N.T.S.

REF. DWG. C4.1

bond architects
222 SOUTH CENTRAL AVE.
SUITE# 501
ST. LOUIS, MO 63105
TEL: 314.863.4994
FAX: 314.863.4996
www.bondarchitectsinc.com
Bond Architects, Inc.
Missouri State Certificate of Authority # 2009027409

Cole & Associates, Inc.
Civil Engineer
Project Number: 26-0052
Certificate of Authority #001165
401 S. 18th Street, Suite 200
St Louis, MO 63103
314.984.9887 tel

RTM Engineering Consultants
MEP / FP Engineer
Project Number: 26.B00203.1928
Certificate of Authority #2002028690
3701 Lindbergh Blvd.
St Louis, MO 63127
314.725.5889 tel

PINCHIN, LLC
Asbestos Abatement Consultant
Project Number: R262.00457.003
Certificate of Authority #
2 Cityplace Drive, Suite 195,
St. Louis, Missouri 63141
314.230.0182 tel

Barretts Elementary School
1780 CARMAN RD., MANCHESTER, MO 63021
Parkway Project #: PN012501B
BUILDING RENOVATION & SITE IMPROVEMENTS

Parkway School District
363 N. Woods Mill Rd.,
Chesterfield, MO 63017
314.415.8231 tel

Project No: 26016

Revisions

Description	Date

This drawing and the details on it are the sole property of the architect and may be used for this specific project only. It shall not be loaned, copied or reproduced, in whole or in part, or for any other purpose or project without the written consent of the Architect. Copyright © 2023 by Bond Architects, Inc.

CIVIL ENGINEERS
CORPORATE ENGINEERING CERTIFICATE #001165

STATE OF MISSOURI
STANLEY EARL FOWLER JR.
NUMBER PE-2020000037
PROFESSIONAL ENGINEER
11/12/2026

STANLEY EARL FOWLER, JR.
CIVIL ENGINEER
PE NO: PE–2020000037

The Professional Architects seal affixed to this sheet applies only to the material and items shown on this sheet. All drawings, instruments or other documents not exhibiting this seal shall not be considered prepared by this architect, and this architect expressly disclaims any and all responsibility for such plan, drawings or documents not exhibiting this seal.

DATE: 11/12/2026

BID/ PERMIT SET

DETAIL SHEET

C5.1

USER: Patrick.Barry TAB: C5.1 DETAIL SHEET
DATE: November 5, 2026 - 2:21:20 PM
DRAWING: S:\JOBS\Jobs2026\26-0052\CAD\C-Plan\PlotSheets\0_tPLAN_DETAIL_26-0052.dwg

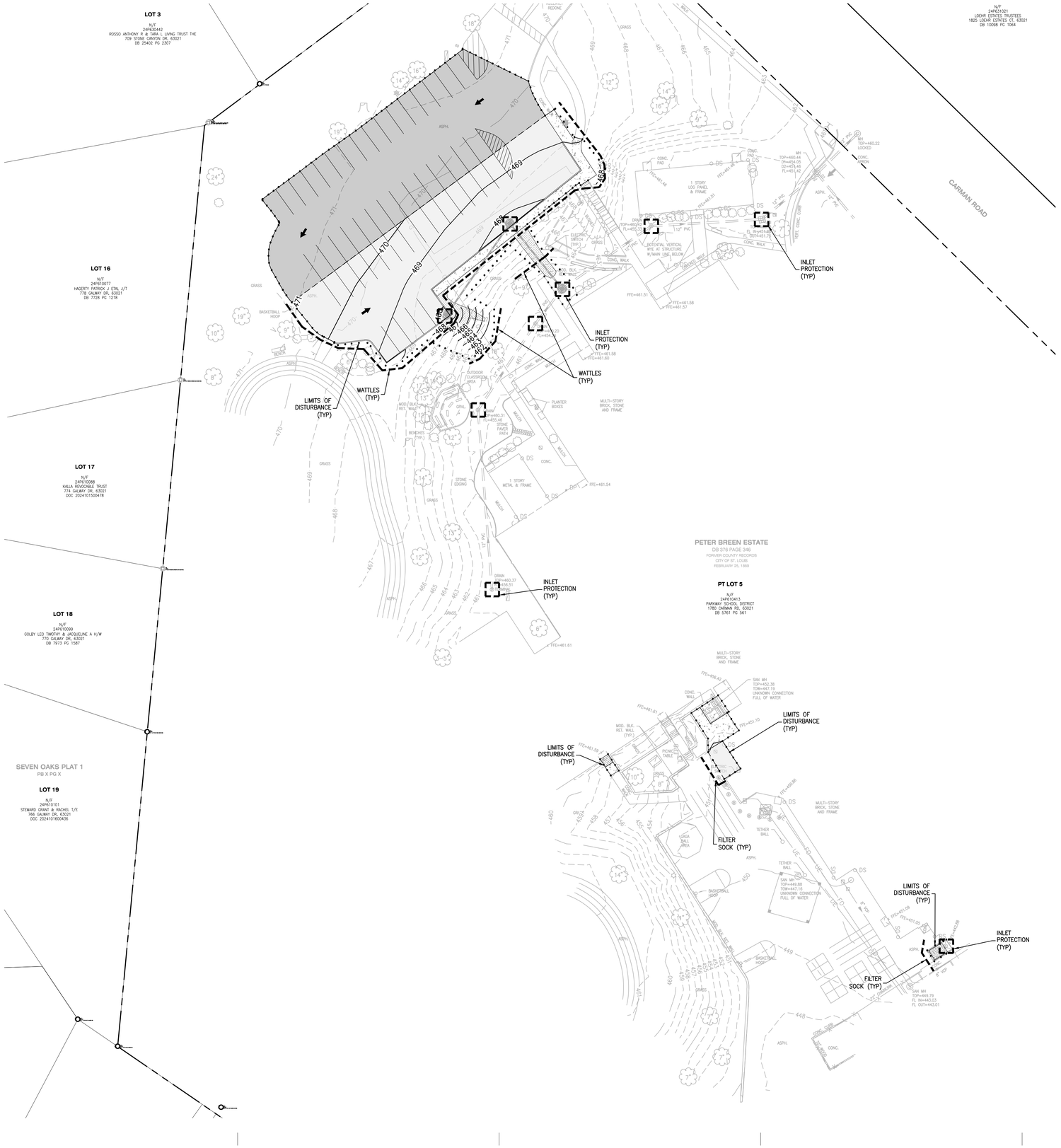

USER: Patrick Barry TAB: C6.0 SWPPP
DATE: November 5, 2026 - 2:21:24 PM
DRAWING: S:\JOBS\Jobs2026\26-0052\ADD\C-Plan\PrintSheets\A_PLAN_SWPPP_26-0052.dwg

bond architects
222 SOUTH CENTRAL AVE.
SUITE# 501
ST. LOUIS, MO 63105
TEL: 314.863.4994
FAX: 314.863.4996
www.bondarchitectsinc.com
Bond Architects, Inc.
Missouri State Certificate of Authority # 2009027409

Cole & Associates, Inc.
Civil Engineer
Project Number: 26-0052
Certificate of Authority #001165
401 S. 18th Street, Suite 200
St Louis, MO 63103
314.984.9887 tel

RTM Engineering Consultants
MEP / FP Engineer
Project Number: 26.B00203.1928
Certificate of Authority #2002028690
3701 Lindbergh Blvd.
St Louis, MO 63127
314.725.5889 tel

PINCHIN, LLC
Asbestos Abatement Consultant
Project Number: R262.00457.003
Certificate of Authority #
2 Cityplace Drive, Suite 195,
St. Louis, Missouri 63141
314.230.0182 tel

Barretts Elementary School

1780 CARMAN RD., MANCHESTER, MO 63021
Parkway Project #: PN012501B
BUILDING RENOVATION & SITE IMPROVEMENTS

Parkway School District
363 N. Woods Mill Rd.,
Chesterfield, MO 63017
314.415.8231 tel

Project No: 26016

Revisions

Description	Date

This drawing and the details on it are the sole property of the architect and may be used for this specific project only. It shall not be loaned, copied or reproduced, in whole or in part, or for any other purpose or project without the written consent of the Architect. Copyright © 2023 by Bond Architects, Inc.

CIVIL ENGINEERS

STATE OF MISSOURI
STANLEY EARL FOWLER JR.
NUMBER PE-2020000037
PROFESSIONAL ENGINEER

CORPORATE ENGINEERING CERTIFICATE #001165

STANLEY EARL FOWLER, JR.
CIVIL ENGINEER
PE NO: PE-2020000037

11/12/2026

The Professional Architects seal affixed to this sheet applies only to the material and items shown on this sheet. All drawings, instruments or other documents not exhibiting this seal shall not be considered prepared by this architect, and this architect expressly disclaims any and all responsibility for such plan, drawings or documents not exhibiting this seal.

DATE: 11/12/2026

BID/ PERMIT SET

SWPPP

C6.0

SWPPP NOTES

SITE OWNER: PARKWAY SCHOOL DISTRICT
SITE ADDRESS: 1780 CARMAN RD
MANCHESTER, MO 63021

SITE CONTACT/
SPECIAL INSPECTOR: POETTKER CONSTRUCTION

1. REFER TO IMPROVEMENT PLANS FOR PERTINENT SITE MAP INFO.
2. REFER TO IMPROVEMENT PLANS FOR PERTINENT TOPOGRAPHICAL INFO.
3. TOTAL LAND ESTIMATED TO BE DISTURBED – APPROXIMATELY 0.53 AC
4. REFER TO DRAINAGE AREA MAP IN IMPROVEMENT PLANS FOR DRAINAGE PATTERNS.
5. REFER TO SWPPP PLAN FOR LOCATION OF ACCESS TO CONSTRUCTION SITE.
6. DESCRIPTION OF B.M.P.'S TO CONTROL EROSION AND SEDIMENTATION (INTERIM AND PERMANENT STABILIZATION PRACTICES)
   - A. FOR DETAILED DESCRIPTION OF EACH BMP REQUIRED ON THE SITE SEE THIS SHEET.
   - B. CONTRACTOR SHALL ESTABLISH PERIMETER SILTATION CONTROL PRIOR TO ANY CONSTRUCTION ACTIVITIES. AREAS REQUIRING MINOR CLEARING &/OR GRADING PRIOR TO INSTALLATION OF SILTATION CONTROL SHALL BE COMPLETED IN A TIMELY MANNER AND SILTATION CONTROL ESTABLISHED IMMEDIATELY FOLLOWING.
   - C. TEMPORARY CONSTRUCTION ENTRANCE SHALL BE INSTALLED WHERE THE ACCESS AREAS INTERSECT WITH PUBLIC ACCESS WAYS. DURING MUDDY CONDITIONS, DRIVERS OF VEHICLES WILL BE REQUIRED TO WASH THEIR WHEELS BEFORE ENTERING THE ROADWAY. WHERE SEDIMENT IS TRANSPORTED ONTO PUBLIC ACCESS WAYS, THE ROAD SHALL BE CLEANED THOROUGHLY AT THE END OF EACH DAY. SEDIMENT SHALL BE REMOVED FROM THE ROAD BY SHOVELING OR SWEEPING. STREET WASHING SHALL BE ALLOWED ONLY AFTER SEDIMENT IS REMOVED IN THIS MANNER.
   - D. UPON COMMENCEMENT OF INITIAL CLEARING AND GRUBBING OPERATIONS, AS WELL AS FUTURE GRADING OPERATIONS, TOPSOIL MUST BE STRIPPED FROM GRADED AREAS AND STOCKPILED FOR IN FINAL GRADING AND / OR EXCESS REMOVAL. THE STOCKPILES WILL BE KEPT ON SITE BUT MUST STAY CLEAR OF ALL CONSTRUCTION ACTIVITY. THE STOCKPILE MUST BE STABILIZED WITH TEMPORARY VEGETATION, OR COVERED AT THE END OF EACH WORKDAY, OR PERIMETER CONTROLS MUST BE IN PLACE TO PREVENT SOIL LOSS AND SEDIMENT TRANSPORT FROM THE STOCKPILE ITSELF UNTIL NEEDED.
   - E. CONTRACTOR SHALL CLEAR AND GRUB THOSE AREAS OF THE SITE SCHEDULED FOR CONSTRUCTION. AREAS NOT SCHEDULED FOR IMMEDIATE CONSTRUCTION SHALL NOT BE CLEARED OF ESTABLISHED VEGETATION UNTIL REQUIRED. REMAINDER OF SITE SHALL BE GRADED, AS REQUIRED. CONTRACTOR SHALL BE RESPONSIBLE FOR INSTALLATION AND MAINTENANCE OF SILTATION CONTROL THROUGHOUT THE DURATION OF THE PROJECT.
   - F. STORM DRAINS SHALL BE INSTALLED AS EARLY AS POSSIBLE, PROVIDED THE INSTALLATION DOES NOT CONFLICT WITH OTHER CONSTRUCTION ACTIVITIES. INLET PROTECTION SHALL BE PLACED AROUND EACH INLET, IMMEDIATELY, UPON COMPLETION OF CONSTRUCTION OF EACH INLET. INLETS MAY BE UTILIZED FOR STORM WATER CONTROL DURING CONSTRUCTION, WITH THE SILT FENCE AND EROSION CONTROL MEASURES IN PLACE. CONTRACTOR SHALL TAKE PRECAUTIONS TO LIMIT SILT FROM ENTERING STORM PIPE, PRIOR TO INSTALLATION OF STORM STRUCTURES.
   - G. IF SEEDING OR ANOTHER VEGETATIVE EROSION CONTROL METHOD IS USED, IT SHALL BECOME ESTABLISHED WITHIN TWO WEEKS OR THE SITE SHALL BE RE–SEEDED OR A NON–VEGETATIVE OPTION EMPLOYED.
   - H. TECHNIQUES SHALL BE EMPLOYED TO ENSURE STABILIZATION ON STEEP SLOPES AND IN DRAINAGE WAYS.
   - I. THE ENTIRE SITE MUST BE STABILIZED, USING HEAVY MULCH LAYER OR ANOTHER METHOD THAT DOES NOT REQUIRE GERMINATION TO CONTROL EROSION, AT THE CLOSE OF THE CONSTRUCTION SEASON. REFER TO TABLE ON THIS SHEET FOR MULCHING RATES.
   - J. TECHNIQUES SHALL BE EMPLOYED TO PREVENT THE BLOWING OF DUST OR SEDIMENT FROM THE SITE.
   - K. TECHNIQUES SHALL BE EMPLOYED TO DIVERT UPLAND RUNOFF PAST DISTURBED SLOPES.
   - L. ALL PROPOSED TURF AREAS ARE TO BE REPLACED WITH SOD ONCE CONSTRUCTION IS COMPLETED WITHIN FIVE DAYS AFTER FINAL GRADING OF THE SITE WHERE SHOWN ON THE PLAN. SHOULD WEATHER CAUSE DELAYS IN EARTHWORK OPERATIONS, ADDITIONAL SILTATION CONTROL MEASURES MAY BE REQUIRED.
   - M. ANY DISTURBED AREAS WHICH WILL REMAIN UNWORKED FOR 5 DAYS OR MORE SHALL BE STABILIZED WITH SEEDING AND MULCHING PER SPECIFICATIONS WITHIN 5 DAYS. IF SEASONAL CONDITIONS PROHIBIT SEEDING, MULCHING OR MATTING SHALL BE USED.
   - N. SEDIMENTATION CONTROLS SHALL ONLY BE REMOVED WITH CITY APPROVAL AFTER THE SITE IS COMPLETELY STABILIZED, VEGETATION IS WELL ESTABLISHED, AND ALL PAVEMENT AREAS ARE INSTALLED.
7. DESCRIPTION OF B.M.P.'S TO PREVENT POTENTIAL POLLUTANTS
   (CONSTRUCTION WASTES, TOXIC OR HAZARDOUS SUBSTANCES, PETROLEUM PRODUCTS, PESTICIDES, HERBICIDES, SITE LITTER, SANITARY WASTES, ETC.)
   - A. SOLID NON–HAZARDOUS CONSTRUCTION WASTE – DISPOSE OF IN TRASH DUMPSTERS OR APPROVED EQUIVALENT IN A LOCATION APPROVED BY THE OWNER. POTENTIALLY SOLUBLE OR LEACHABLE SOLID WASTE SHALL BE STORED OFF THE GROUND AND IN COVERED LEAK–PROOF CONTAINERS. SOLID WASTE SHALL BE STORED OFF THE GROUND AND IN COVERED LEAK–PROOF CONTAINERS. SOLID WASTE SHALL BE PROPERLY DISPOSED OF OFF–SITE ON A REGULAR BASIS.
   - B. HAZARDOUS WASTE – HAZARDOUS WASTE SHALL BE SEGREGATED FROM NON–HAZARDOUS CONSTRUCTION SITE DEBRIS. LIQUID OR SEMI–LIQUID HAZARDOUS WASTE SHALL BE STORED IN APPROPRIATE CONTAINERS (CLOSED DRUMS OR SIMILAR) AND SHALL BE KEPT UNDER COVER. GRANULAR, SOLUBLE, OR LEACHABLE HAZARDOUS WASTE MATERIALS SHALL BE STORED OFF THE GROUND AND IN COVERED LEAK–PROOF CONTAINERS, THE OWNER SHALL PROPERLY APPROVE ANY HAZARDOUS WASTE STORAGE AREA LOCATIONS.
   - C. HAZARDOUS WASTE SHALL BE PROPERLY DISPOSED OF OFF–SITE ON A REGULAR BASIS BY A REPUTABLE, LICENSED HAZARDOUS WASTE HAULER.
   - D. IT IS NOT THE INTENT OF THIS SWPPP TO SUPERSEDE OR REPLACE NORMAL SITE ASSESSMENT AND REMEDIATION PROCEDURES CONCERNING HAZARDOUS MATERIALS. SIGNIFICANT SPILLS AND/OR CONTAMINATION WARRANT AN IMMEDIATE RESPONSE BY TRAINED PROFESSIONALS. SUSPECTED JOB SITE CONTAMINATION SHOULD IMMEDIATELY BE REPORTED TO REGULATORY AUTHORITIES AND PROTECTIVE MEASURES TAKEN.
   - E. FRESH CONCRETE WASTE AND CONCRETE EQUIPMENT WASH DOWNS SHALL BE CONTAINED AND SHALL BE STORED AWAY FROM DRAINAGE DITCHES, SWALES AND DRAINAGE STRUCTURES. WHERE APPROPRIATE, CONTAINMENT BERMS SHALL BE PLACED AROUND WASTE STORAGE AREAS.
   - F. ON–SITE FUELING FACILITIES ARE REQUIRED TO ADHERE TO ALL APPLICABLE FEDERAL AND STATE REGULATIONS CONCERNING STORAGE AND DISPENSERS.
   - G. PROVISIONS SHALL BE MADE SO THAT A SUFFICIENT NUMBER OF TEMPORARY TOILET FACILITIES ARE AVAILABLE TO SERVE THE NUMBER OF WORKERS ON–SITE.
   - H. PROVISIONS SHALL BE MADE FOR LITTER CONTROL.
8. DESCRIPTION OF B.M.P.'S TO REMAIN AFTER CONSTRUCTION
   - A. STORM DRAINS – THE DEVELOPMENT WILL BE SERVED BY A STORM WATER SYSTEM CONSISTING OF PIPE AND INLETS. ANY STORM DRAINAGE SYSTEM DESIGNATED AS "PRIVATE" SHALL BE OPERATED AND MAINTAINED BY THE OWNER. ANY STORM DRAINAGE SYSTEM DESIGNATED AS "PUBLIC" SHALL BE MAINTAINED BY METROPOLITAN ST. LOUIS SEWER DISTRICT (MSD) UPON DEDICATION OF THE SEWERS TO THE DISTRICT.
   - B. TURF AREAS – TURF AREAS SHALL BE MAINTAINED TO INSURE SITE AREAS REMAIN STABILIZED UPON COMPLETION OF CONSTRUCTION ACTIVITIES.
   - C. PAVED AREAS AND WALKWAYS – AREAS SUBJECT TO FOOT AND VEHICLE TRAFFIC SHALL BE PAVED AND KEPT IN GOOD REPAIR FOLLOWING COMPLETION OF CONSTRUCTION ACTIVITIES.
9. CONTRACTOR TO COORDINATE WITH THE CITY AND DEVELOPER FOR OFF STREET PARKING AREA..
10. HAUL ROUTE OF EXCESS SPOILS TO BE DETERMINED BY SITE CONTRACTOR.
11. REFER TO B.M.P.'S DESCRIPTIONS (**#6**, **#7**, **#8**) AND THE SWPP PLAN TO REFERENCE ALL EROSION AND SEDIMENT CONTROL MEASURES REQUIRED FOR THIS SITE.
12. REFER TO SEEDING RATES/MIXTURES ON THIS SHEET.
13. PLANNED RESPONSE TO LOSS OF CONTAINED SEDIMENT:
    B.M.P.'S SHALL BE REPAIRED AND/OR REPLACED IMMEDIATELY, AS REQUIRED, TO STABILIZE SITE AND CONTAIN SEDIMENT LADEN RUNOFF. OFFSITE AREAS SHALL BE REVIEWED FOR EXTENT OF IMPACT FROM B.M.P. FAILURE. PERMIT HOLDER SHALL BE REQUIRED TO PROVIDE DOCUMENTATION TO THE ST. CHARLES DEPARTMENT OF PUBLIC WORKS OF THE B.M.P. MEASURES, INSTALLED AND SCHEDULED MAINTENANCE, AND REPAIRS.
14. PERMIT HOLDER
    - A. PERMIT HOLDER SHALL NOTIFY ALL CONTRACTORS AND OTHER ENTITIES (INCLUDING UTILITY CREWS, CITY EMPLOYEES, OR THEIR AGENTS) THAT WILL PERFORM WORK AT THE SITE, OF THE EXISTENCE OF THE STORM WATER POLLUTION PREVENTION PLAN (SWPPP) AND WHAT ACTIONS OR PRECAUTIONS SHALL BE TAKEN WHILE ON SITE TO MINIMIZE THE POTENTIAL FOR EROSION AND THE POTENTIAL FOR DAMAGING ANY BEST MANAGEMENT PRACTICES (BMP'S).
    - B. PERMIT HOLDER SHALL DETERMINE THE NEED FOR AND ESTABLISH TRAINING PROGRAMS TO ENSURE THAT ALL SITE WORKERS HAVE BEEN TRAINED, AT A MINIMUM, IN EROSION CONTROL, MATERIAL HANDLING AND STORAGE, AND HOUSEKEEPING.
    - C. PROVIDE COPIES OF THE STORM WATER POLLUTION PREVENTION PLAN (SWPPP) TO ALL PARTIES WHO ARE RESPONSIBLE FOR INSTALLATION, OPERATION, OR MAINTENANCE FOR ANY BEST MANAGEMENT PRACTICES (BMP'S).
    - D. MAINTAIN A CURRENT COPY OF THE STORM WATER POLLUTION PREVENTION PLAN (SWPPP) ON THE SITE AT ALL TIMES. A COPY OF THE SWPPP WILL BE LOCATED AT THE CONSTRUCTION TRAILER AND BE AVAILABLE FOR VIEWING AT ALL TIMES.
15. PRIOR TO ANY MAJOR LAND DISTURBANCE ACTIVITY, A LAND DISTURBANCE PERMIT FROM THE STATE OF MISSOURI DEPARTMENT OF NATURAL RESOURCES AND COUNTY, WILL BE REQUIRED.
16. ANY LAND CLEARING, CONSTRUCTION, OR DEVELOPMENT INVOLVING THE MOVEMENT OF EARTH SHALL BE IN ACCORDANCE WITH THE STORM WATER POLLUTION PREVENTION PLAN.
17. CONTRACTOR SHALL KEEP SILT FROM ENTERING INTO THE STORM SEWER SYSTEM AND KEEP ALL WATER FROM PONDING ON THE PAVEMENT THAT IS PART OF THE PEDESTRIAN TRAVEL WAY. INLET PROTECTION SHALL ONLY BE USED AS NECESSARY TO KEEP SILT FROM ENTERING INTO THE STORM SEWER SYSTEM.

SCALE: 3/4" = 1'-0" (0, 0.25, 0.5, 1")
SCALE: 1/2" = 1'-0" (0, 1, 2")
SCALE: 1/4" = 1'-0" (0, 2, 4")
SCALE: 1/8" = 1'-0" (0, 4, 8, 16")
SCALE: 1/16" = 1'-0" (0, 8, 16, 32")

USER: Patrick, Barry TAB: C6.1 SWPPP NOTES AND DETAILS
DATE: November 5, 2026 – 2:21:27 PM
DRAWING: S:\JOBS\Jobs2026\26-0052\CADD\C–Plan\PlotSheets\0_PLAN_SWPP_26–0052.dwg

NEW	REVISIONS
8/23/07	10/10/11 · 1/1/16

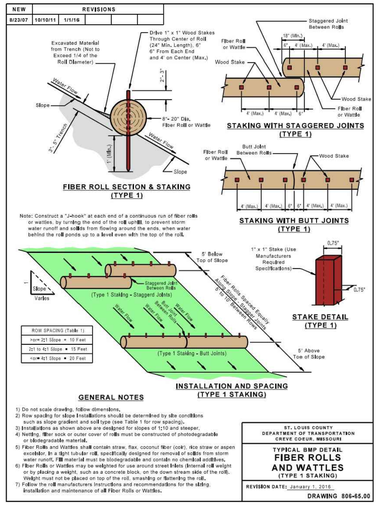

GENERAL NOTES

1) Do not scale drawing. follow dimensions.
2) Rill and gully slope installations should be determined by site conditions such as slope gradient and soil type (see Table 1 for row spacing).
3) Installations as shown above are designed for slopes of 1/10 and steeper.
4) Netting, fiber sock or outer cover of rolls must be constructed of photodegradable or biodegradable material.
5) Fiber Rolls and Wattles shall contain straw, flax, coconut fiber (coir), rice straw or aspen excelsior. In a tight tubular roll, specifically designed for removal of voids from storm water runoff, FM material must be biodegradable and contain no chemical additives.
6) Fiber Rolls or Wattles may be weighted for use around stream banks (manmade roll weight or by placing a weight, such as a concrete block, on the down stream side of the roll, by placing a HEAVY, SUCH AS A CONCRETE BLOCK, ON THE DOWN STREAM SIDE OF THE ROLL OR BY PLACING A STAKE ON THE DOWN SLOPE IF LOCALIZED FLOODING IS POSSIBLE.
7) Follow the roll manufacturers instructions and recommendations for the staking, installation and maintenance of all Fiber Rolls or Wattles.

ROW SPACING (Table 1)
rows 2:1 Slope = 10 Feet
2:1 to 4:1 Slope = 15 Feet
rows 4:1 Slope = 20 Feet

ST. LOUIS COUNTY DEPARTMENT OF TRANSPORTATION
CREVE COEUR, MISSOURI
TYPICAL BMP DETAIL
FIBER ROLLS AND WATTLES (TYPE 1 STAKING)
REVISION DATE: January 1, 2016
DRAWING 806-65.00

FIBER ROLLS AND FILTER ROLLS

PHYSICAL DESCRIPTION - A fiber roll, also known as a wattle, consists of straw, flax, coconut fiber (coir), rice straw or other similar materials bound in a tight photodegradable or biodegradable tubular roll or filter sock. A filter roll consists of a biodegradable, coarse composted or fiber material bound in a tight photodegradable or biodegradable tubular roll or filter sock. They intercept runoff, reduce flow velocity, remove sediment from the runoff, and reduce soil erosion. Fiber rolls and filter rolls must be prefabricated.

WHERE BMP IS TO BE INSTALLED - Installed on erodible slopes, at top of and toe of slopes, around the perimeter of the site, and around temporary stockpiles, as final barrier to sediment being carried off site. Spacing of rolls along slopes is relative to slope. Filter rolls and fiber rolls may also be used at drain inlets, swales and other concentrated flow areas to prevent sediment, silt, and other solids in storm water runoff from entering the storm sewer system. Rolls may also be used as mini check dams in unlined ditches and swales.

CONDITIONS FOR EFFECTIVE USE OF BMPs

Type of Flow:	Sheet flow and concentrated flow
Contributing Slope:	For slopes, use the following row spacing:
2:1 (H:V) or steeper:	10 feet
Between 2:1 and 4:1 (H:V):	15 feet
4:1 (H:V) or flatter:	20 feet

WHEN BMP IS TO BE INSTALLED - Prior to disturbance of natural vegetation and at intervals during construction of fill slopes. Fiber rolls and filter rolls should not be used on slopes subject to creep, slumping or landslide. Rolls are difficult to move once saturated.

INSTALLATION / CONSTRUCTION PROCEDURES

- ✓ Calculate required roll diameter, length and row spacing based on slope and the manufacturers recommendations.
- ✓ Dig trench to required depth for fiber rolls (filter rolls do not require trench).
- ✓ Place fiber rolls in trench or filter rolls directly on slope.
- ✓ Stake the fiber rolls or filter rolls as shown on detail drawings.
- ✓ Place excavated soil (fiber roll) or filter roll material along the upside of rolls as shown on detail drawings, not to exceed ¼ of the roll diameter.

O&M PROCEDURES

- ✓ Inspect every week and after every storm.
- ✓ Remove sediment buildup deeper than ½ the exposed roll height.
- ✓ Replace or repair split, torn, unraveling, slumping or damaged rolls.
- ✓ Repair or replace unstable or broken wood stakes.
- ✓ Stabilize any areas susceptible to undermining.
- ✓ Extend rows or add additional rolls if necessary to provide adequate protection.

SITE CONDITIONS FOR REMOVAL - After permanent vegetation of slope is established, remove rolls, collect and dispose of sediment accumulation, re-grade trench area to blend with adjacent ground, and vegetate. Rolls do not have to be removed if approved construction or grading plans call for rolls to permanently be left in place (must be fully biodegradable).

TYPICAL DETAILS - 806-65.00
806-55.01
806-55.02

NEW	REVISIONS
11/1/14	1/1/16

GENERAL NOTES

1) LOCATION, DIAMETER AND LENGTH OF SOCK IS DEPENDENT ON THE INLET/GUTTER BEING PROTECTED (E.E. DOUBLE, TRIPLE INLET, ETC.).
2) GRAVEL FILTER SACK MAY BE SUBSTITUTED FOR FILTER SOCKS.
3) SOME LOCATIONS WILL NOT HAVE SIDEWALK (AS SHOWN IN THIS DETAIL).
4) IF THE AREA BEHIND THE INLET (AND SIDEWALK) IS NOT STABILIZED, A BMP SHALL BE USED TO PREVENT POLLUTANTS FROM ENTERING THIS INLET FROM BEHIND.
5) WHEN A WATTLE IS USED TO PREVENT POLLUTANTS FROM ENTERING AN INLET THROUGH THE SIDEWALK, AND THE SIDEWALK IS WORTHY AS A MINIMUM 3 FOOT WALKING PATH, THE BMP SHALL BE MAINTAINED TO PREVENT SEDIMENT ACCUMULATION ON THE SIDEWALK.
6) SOCKS / BAGS (BMP) SHALL BE INSTALLED PRIOR TO ANY LAND DISTURBANCE ACTIVITY. SOCKS / BAGS SHALL BE INSTALLED AFTER INSTALLATION OF PROPOSED INLET(S).
7) ACCUMULATED SEDIMENT SHALL BE REMOVED BEFORE IT REACHES ONE HALF THE DIAMETER OF THE SOCK OR BAG HEIGHT AT A MINIMUM OR ENCROACHES ONTO A TRAVEL LANE.
8) SEE GRAVEL BAG, FILTER SOCK (WATTLE, FIBER ROLL) AND INLET PROTECTION SPECIFICATIONS IN THE SEDIMENT AND EROSION CONTROL MANUAL TO DETERMINE THE APPROPRIATE SOCK SIZE TO BE LAYERED AND PACKED TIGHTLY SUCH THAT NO GAPS ARE EVIDENT.
9) LEAVE ONE GRAVEL BAG GAP IN THE TOP LAYER TO PROVIDE A SPILLWAY FOR OVERFLOW.
10) STRAW BALES MAY NOT BE USED AS A BMP. INSTALL A PAIR OF FILTER SOCKS, NEXT TO EACH OTHER, PARALLEL TO THE CURB/INLET IF DIRECTED BY THE COUNTY.
11) BMP'S MUST BE INSTALLED TO ALLOW THE INLET / GUTTER TO FUNCTION WITHOUT FLOODING. IF FLOODING OCCURS, ELIMINATE LOCALIZED FLOODING, CHOOSE THE DIAMETER OF SOCK AND LAYER(S) OF SOCKS SUITABLE TO THE INDIVIDUAL APPLICATION.
12) INLET PROTECTION IS NOT A STAND ALONE BMP AND SHOULD BE USED IN CONJUNCTION WITH OTHER UP STREAM BMP's.
13) SOCKS NEED TO BE WEIGHTED FOR USE AROUND INLETS (INTERNAL ROLL WEIGHT OR BY PLACING A WEIGHT, SUCH AS A CONCRETE BLOCK, ON THE DOWN STREAM SIDE OF THE ROLL OR BY PLACING A STAKE ON THE DOWN SLOPE IF LOCALIZED FLOODING IS POSSIBLE.
14) AT LOCATIONS WITHOUT CURBS, THE GUTTER PROTECTION MAY BE SHAPED INTO A HORSESHOE, WITH THE OPENING FACING OPPOSITE THE DIRECTION OF FLOW. GUTTER PROTECTION CAN HELP PRE-TREAT STORM WATER IF NEEDED.
15) AT LOCATIONS WITHOUT CURBS, PLACE BMP's OF CHOICE COMPLETELY AROUND THE INLET, OVERLAP ENDS IF NEEDED.

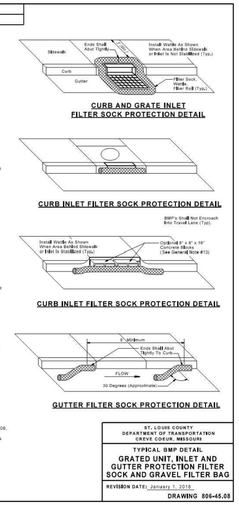

ST. LOUIS COUNTY DEPARTMENT OF TRANSPORTATION
CREVE COEUR, MISSOURI
TYPICAL BMP DETAIL
GRATED UNIT, INLET AND GUTTER PROTECTION FILTER SOCK AND GRAVEL FILTER BAG
REVISION DATE: January 1, 2016
DRAWING 806-65.08

INLET PROTECTION - BLOCK & GRAVEL, GRAVEL BAGS, AND FIBER ROLLS

PHYSICAL DESCRIPTION - A temporary sediment control barrier consisting of a short concrete block wall supporting gravel filter media, gravel bags, or fiber rolls around a storm water inlet designed to prevent sediment from entering the storm sewer. Shallow temporary ponding during and after rainfall should be expected. Use an alternate method if flooding of driving lanes, adjacent property, etc. is possible. Block and Gravel (Double Area Inlet), Fiber Roll (Single Curb Inlet), Fiber Roll (Double Curb Inlet), Fiber Roll (Triple Curb Inlet), Fiber Roll (Grated Inlet), or Fiber Roll (Gutter Protection).

WHERE BMP IS TO BE INSTALLED - At inlets where heavy flows are expected and an overflow capacity is necessary to prevent excessive ponding around the structure.

CONDITIONS FOR EFFECTIVE USE OF BMPs

Type of Flow:	Sheet flow and concentrated flow
Contributing Area:	Maximum of 1 acre

WHEN BMP IS TO BE INSTALLED - Immediately after placement of inlet and before construction starts on existing inlets.

INSTALLATION / CONSTRUCTION PROCEDURES

- ✓ Backfill, compact and uniformly grade area around inlet.
- ✓ Install first row of concrete blocks adjacent to the inlet sill, placing one block on its side on each side of inlet. The blocks are placed against the sill for lateral support and to avoid washouts when overflows occur.
- ✓ If needed for lateral support, install 2 x 4 lumber through vertical block openings.
- ✓ Fill vertical block openings with gravel for stability.
- ✓ Place second row of block offsetting one-half block from the first row, in a brick-like pattern.
- ✓ Fill vertical block openings with gravel.
- ✓ Anchor wire screen over horizontal block openings to support gravel.
- ✓ Place gravel around the blocks.

O&M PROCEDURES

- ✓ Inspect every week and after every storm.
- ✓ Remove sediment accumulation to keep it at least 8 inches from the top of the blocks.
- ✓ Remove trash accumulation at inlet.
- ✓ Repair elements to original configuration as needed.

SITE CONDITIONS FOR REMOVAL - Remove after contributing drainage areas have been adequately stabilized. Restore area to grade and vegetate.

TYPICAL DETAIL - 806-45.02 (Block and Gravel, Single Area Inlet)
806-45.08 (Fiber Roll, Single Curb Inlet)

SEEDING REQUIREMENTS

Dates for Seeding

Permanent Seeding	Jan	Feb	March	April	May	June	July	Aug	Sep	Oct	Nov	Dec
Tall Fescue			O	O	O			O	O			
Smooth Brome			O	O	O			O	O			
Fescue & Brome			O	O	O	O		O	O			
Fescue, Rye & Bluegrass	A	A	O	O	O	P	P	O	O	P	P	A
Temporary Seeding	**Jan**	**Feb**	**March**	**April**	**May**	**June**	**July**	**Aug**	**Sep**	**Oct**	**Nov**	**Dec**
Rye or Sudan	A	A	O	O	O	O	O	O	O	O	A	A
Oats	A	A	O	O	O	O	O	O	O			

O = Optimum seeding dates
A = Acceptable seeding dates
P = Permitted seeding dates with reseeding 2 months later - Initially use 50% of seed and 75% of fertilizer. Reseed with additional 75% seed and remaining fertilizer.

Minimum Fertilizer and Seeding Rates

Permanent Seeding*	Pounds per acre	Pounds Per 1000 sq. ft.
Tall Fescue	300	7.0
Smooth Brome	200	4.6
Mixture # 1	250	5.7
Mixture # 2	210	4.8

Mixture # 1 = Tall Fescue @ 150 pounds per acre and Brome @ 100 pounds per acre.
Mixture # 2 = Tall Fescue @ 100 pounds per acre; Perennial Rye grass @ 100 pounds per acre; and Kentucky Blue grass @ 10 pounds per acre.
* = Seeding rate for slopes in excess of 20% (5:1), shall be 10 pounds per 1000 sq. ft.

Temporary Seeding	Pounds per acre	Pounds Per 1000 sq. ft.
Rye or Sudan	150	3.5
Oats	200	2.5

Fertilizer	Permanent Seeding (pounds per acre)	Temporary Seeding (pounds per acre)
Nitrogen	45	30
Phosphate	65	30
Potassium	65	30
Lime - ENM	600	600

ENM= Effective neutralizing material per State evaluation of quarried rock.

SEEDING

PHYSICAL DESCRIPTION - Establishment of vegetation by spreading grass seed designed to protect exposed soil from erosion by eliminating direct impact of precipitation and slowing overland flow rates. Once established, the vegetative cover will also filter pollutants from the runoff. Use only perennial vegetation for final stabilization.

WHERE BMP IS TO BE INSTALLED - To exposed soil after a phase of rough or finish grading has been completed, or areas where no activity will occur for 30 days.

CONDITIONS FOR EFFECTIVE USE OF BMPs

Type of Flow:	Sheet flow
Contributing Slope Length:	30 foot maximum for 3:1 slopes 50 foot maximum for slope between 3:1 and 10:1 100 foot maximum for slopes under 10%
Minimum Rates:	See attached chart(s)
Acceptable Dates:	See attached chart

WHEN BMP IS TO BE INSTALLED - Immediately after rough or finished grading is completed.

INSTALLATION / CONSTRUCTION PROCEDURES

- ✓ Install upstream BMPs to protect area to be seeded.
- ✓ Rough grade area and remove all debris larger than 1-inch in diameter and concentrated areas of smaller debris.
- ✓ Install stabilization grids, if needed.
- ✓ Mix soil amendments (lime, fertilizer, etc.) into top 3 to 6 inches of soil as needed.
- ✓ Plant seed ¼ to ½ inch deep.
- ✓ Roll lightly to firm surface.
- ✓ Cover seeded area with mulch unless seeding completed during optimum spring and summer dates.
- ✓ Install additional stabilization (netting, bonded fiber matrix, etc.) as required.
- ✓ Water immediately - enough to soak 4 inches into soil without causing runoff.
- ✓ If contract / permit allows seeding to be used for final stabilization, only perennial vegetation seeds shall be used.
- ✓ For additional information see Sections 805 and 806.50 of St. Louis County's Standard Specification for Road and Bridge Construction.

O&M PROCEDURES:

- ✓ Inspect every week and after every storm
- ✓ Protect area from vehicular and foot traffic
- ✓ Reseed areas that have not sprouted within 21 days of planting.
- ✓ Repair damaged or eroded areas and reseed and stabilize as needed
- ✓ Do not mow until 4 inches of growth occurs
- ✓ During the first 4 months, mow no more than ⅓ the grass height
- ✓ Re-fertilize during 2nd growing season

SITE CONDITIONS FOR REMOVAL - Does not require removal, but temporary seeding can be removed immediately prior to work returning to an area

MULCH SELECTION AS A FUNCTION OF SLOPE

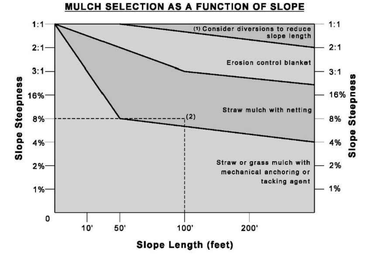

(1) For slopes steeper than 1:1, consider building a diversion above slope to divert water.
(2) Example: An 8% slope, 100 feet long, requires straw mulch with netting

GENERAL MULCH RECOMMENDATIONS TO PROTECT FROM SPLASH AND SHEET FLOW

Material	Rate Per Acre	Requirements	Notes
Straw	2 to 2.5 tons	Dry, unchopped stream/threshed; avoid weeds	Spread by hand or machine; must be tacked or tied down
Wood Fiber or Wood Cellulose	0.5 to 1 ton		Use with hydro seeder, may be used to tack straw. Do not use in hot, dry weather.
Wood Chips	5 to 8 tons	Air dry. Add nitrogen fertilizer at 12 lb per ton	Apply with blower, chip handler, or by hand. Not for fine turf areas.
Bark	35 cu. yds.	Air dry, shredded, or hammermilled; or chips	Apply with mulch blower, chip handler or by hand. Do not use asphalt tack.

MULCH

PHYSICAL DESCRIPTION - A layer of organic material designed to protect exposed soil or freshly seeded areas from erosion by eliminating direct impact of precipitation and slowing overland flow rates. Mulch materials may include, but are not limited to, such things as grass, hay, straw, wood chips, wood fibers, hydro mulch and shredded bark. Type 1 mulch is prohibited in the flood plain.

- Type I Mulch-Vegetative (includes grass, hay, and straw).
- Type II Mulch-Vegetative with asphalt emulsion (includes grass, hay, and straw).
- Type III Mulch-Vegetative with overspray (includes grass, hay, and straw).
- Type V Mulch-Hydro mulch (includes wood fiber, wood cellulose).
- Shredded Hardwood Bark Mulch.
- Wood Chips, (not recycled lumber).

WHERE BMP IS TO BE INSTALLED - Typically installed on seeded areas for temporary use, and in landscaped areas for permanent use.

CONDITIONS FOR EFFECTIVE USE OF BMPs

Type of Flow:	Sheet flow only
Slopes:	See attached chart for types of mulch acceptable as a function of slope length and steepness
Mulching Rates:	See attached table

WHEN BMP IS TO BE INSTALLED - Immediately after grading landscaped areas or seeding other areas.

INSTALLATION / CONSTRUCTION PROCEDURES

- ✓ Install upstream BMPs to protect area to be mulched
- ✓ Rough grade area and remove all debris larger than 1 inch if area is to be vegetated and mowed in the future, larger than 2 inches if area is to be permanently mulched
- ✓ If area is to be seeded, follow requirements of Seeding BMP.
- ✓ Spread mulch and anchor by punching it into the ground, using netting, peg and twine, or tacking with liquid binder
- ✓ For additional information see Section 802 of St. Louis County's Standard Specifications for Road and Brid


LOT 3
N/F
249630442
IROSSO ANTHONY R & TARA L LIVING TRUST THE
709 STONE CANYON DR, 63021
DB 25402 PG 2207
LOT 16
N/F
249510077
HAGERTY PATRICK J ETAL J/T
778 GALWAY DR, 63021
DB 7728 PG 1218
LOT 17
N/F
249610068
KALLA REVOCABLE TRUST
774 GALWAY DR, 63021
DOC: 2024015004TR
LOT 18
N/F
249610099
DOLBY LEO TIMOTHY & JACQUELINE A H/W
770 GALWAY DR, 63021
DB 7973 PG 1587
LOT 19
N/F
249610101
STEWARD GRANT M RACHEL B/E
766 GALWAY DR, 63021
DOC: 2024015004036
N/F
249631023
LOCHR ESTATES TRUSTEES
1825 LOCHR ESTATES CT, 63021
DB 19058 PG 1064
CARMAN ROAD
PETER BREEN ESTATE
DB 376 PAGE 340
PT LOT 5
N/F
249610413
PARKWAY SCHOOL DISTRICT
1780 CARMAN RD, 63021
DB 5788 PG 561
A
B
C
1
2
3
ASPH.
CONC.
GRASS
1 STORY
200 PAVE
W FRAME
MULTI-STORY
BRICK, STONE
AND FRAME
SAN MH
TOP=460.64
IN=445.64
D2=453.46
FL=451.46
SAN MH
TOP=460.22
LOCKED
SAN MH
TOP=452.38
TOW=447.18
UNKNOWN CONNECTION
FULL OF WATER
SAN MH
TOP=449.88
TOW=447.16
UNKNOWN CONNECTION
FULL OF WATER
SAN MH
TOP=448.79
FL IN=443.03
FL OUT=443.01
DRAIN
TOP=460.20
FL=454.28
DRAIN
TOP=460.37
FL=454.47
DRAIN
TOP=460.23
FL=456.83
ELECTRIC
SWITCH
ELECTRIC/TEL/VERTICAL
RISE AT SITE/CURB
W/MAIN LINE BELOW
PLANTER
BOXES
STONE
EDGING
BASKETBALL
HOOP
TETHER
BALL
SOCCER
GOAL
MOD. BLK.
RET. WALL
(TYP.)
PICNIC
TABLE
TRASH
ENCL.
CONC.
WALK
CONC.
APRON
MH
TOP=460.22
LOCKED
FFE=461.51
FFE=461.54
FFE=461.61
FFE=461.58
FFE=461.59
FFE=461.75
FFE=461.66
FFE=459.96
FFE=459.98
FFE=459.88
FFE=459.78
FFE=459.68
FFE=459.58
FFE=459.48
FFE=459.38
FFE=459.28
FFE=459.18
FFE=459.08
FFE=458.98
FFE=458.88
FFE=458.78
FFE=458.68
FFE=458.58
FFE=458.48
FFE=458.38
FFE=458.28
FFE=458.18
FFE=458.08
FFE=457.98
FFE=457.88
FFE=457.78
FFE=457.68
FFE=457.58
FFE=457.48
FFE=457.38
FFE=457.28
FFE=457.18
FFE=457.08
FFE=456.98
FFE=456.88
FFE=456.78
FFE=456.68
FFE=456.58
FFE=456.48
FFE=456.38
FFE=456.28
FFE=456.18
FFE=456.08

PRE DEVELOPED CONDITIONS (0.53 AC)

PERVIOUS AREA = 0.06 AC.
x PI=1.70 (15 YR)
TOTAL PERVIOUS AREA CFS = 0.10 CFS

IMPERVIOUS AREA = 0.47 AC.
x PI=3.54 (15 YR)
TOTAL IMPERVIOUS AREA CFS = 1.66 CFS

TOTAL=1.76 CFS



POST DEVELOPED CONDITIONS (0.53 AC)

PERVIOUS AREA = 0.06 AC.
x PI=1.70 (15 YR)
TOTAL PERVIOUS AREA CFS = 0.10 CFS

IMPERVIOUS AREA = 0.47 AC.
x PI=3.54 (15 YR)
TOTAL IMPERVIOUS AREA CFS = 1.66 CFS

TOTAL=1.76 CFS



50' 0' 50' 100'
SCALE: 1" = 50'

DIFFERENTIAL RUNOFF CALCULATIONS (15YR)

PRE DEVELOPED CONDITIONS	1.76 CFS
POST DEVELOPED CONDITIONS	1.76 CFS
DIFFERENTIAL RUNOFF RATE	0.00 CFS

IMPERVIOUS AREA INCREASE = 0.00 ACRES
DISTURBED AREA = 0.53 ACRES

STORMWATER MANAGEMENT NOTE:

LAND AREA DISTURBED = ±0.53 ACRES

NOTES:

1. ANY FUTURE LAND DISTURBANCE AND/OR INCREASE IN IMPERVIOUS AREA ON THIS SITE MAY REQUIRE ADDITIONAL STORM WATER MANAGEMENT PER MSD REGULATIONS IN PLACE AT THAT TIME.

THIS SHEET IS FOR DRAINAGE CALCULATION PURPOSES ONLY AND NOT TO BE USED AS CONSTRUCTION PLANS

SCALE: 3" = 1'-0" 1" 0.5" 0.25" 0
SCALE: 1 1/2" = 1'-0" 2" 1" 0.5" 0
SCALE: 1" = 1'-0" 2" 1" 0.5" 0
SCALE: 3/4" = 1'-0" 3" 2" 1" 0
SCALE: 1/2" = 1'-0" 4" 2" 1" 0
SCALE: 1/4" = 1'-0" 8" 4" 2" 0
SCALE: 1/8" = 1'-0" 16" 8" 4" 0
SCALE: 1/16" = 1'-0" 32" 16" 8" 0

USER: Patrick Barry TAB: C8.0 PRE-POST DRAINAGE AREA MAP
DATE: November 5, 2026 - 2:21:44 PM
DRAWING: S:\JOBS\Jobs2026\26-0052\CADD\C-Plan\PlotSheets\D_PLAN_PRE-POST_26-0052.dwg

bond architects
222 SOUTH CENTRAL AVE.
SUITE# 501
ST. LOUIS, MO 63105
TEL: 314.863.4994
FAX: 314.863.4996
www.bondarchitectsinc.com
Bond Architects, Inc.
Missouri State Certificate of Authority # 2009027409

Cole & Associates, Inc.
Civil Engineer
Project Number: 26-0052
Certificate of Authority #001165
401 S. 18th Street, Suite 200
St Louis, MO 63103
314.984.9887 tel

RTM Engineering Consultants
MEP / FP Engineer
Project Number: 26.B00203.1928
Certificate of Authority #2002028690
3701 Lindbergh Blvd.
St Louis, MO 63127
314.725.5889 tel

PINCHIN, LLC
Asbestos Abatement Consultant
Project Number: R262.00457.003
Certificate of Authority #
2 Cityplace Drive, Suite 195,
St. Louis, Missouri 63141
314.230.0182 tel

Barretts Elementary School
1780 CARMAN RD., MANCHESTER, MO 63021
Parkway Project #: PN012501B
BUILDING RENOVATION & SITE IMPROVEMENTS
Parkway School District
363 N. Woods Mill Rd.,
Chesterfield, MO 63017
314.415.6231 tel

Project No: 26016

Revisions

Description	Date

This drawing and the details on it are the sole property of the architect and may be used for this specific project only. It shall not be loaned, copied or reproduced, in whole or in part, or for any other purpose or project without the written consent of the Architect. Copyright © 2023 by Bond Architects, Inc.

CIVIL ENGINEERS
CORPORATE ENGINEERING CERTIFICATE #001165

STATE OF MISSOURI
STANLEY EARL FOWLER JR.
NUMBER PE-2020000037
PROFESSIONAL ENGINEER
11/12/2026

STANLEY EARL FOWLER, JR.
CIVIL ENGINEER
PE NO: PE-2020000037

The Professional Architects seal affixed to this sheet applies only to the material and items shown on this sheet. All drawings, instruments or other documents not exhibiting this seal shall not be considered prepared by this architect, and this architect expressly disclaims any and all responsibility for such plan, drawings or documents not exhibiting this seal.

DATE: 11/12/2026

BID/ PERMIT SET

PRE-POST DRAINAGE AREA MAP

C8.0

Save

SCALE: 3" = 1'-0" 0 0.25' 0.5' 1'

SCALE: 1 1/2" = 1'-0" 0 0.5' 1' 2'

SCALE: 1" = 1'-0" 0 0.5' 1' 2'

SCALE: 3/4" = 1'-0" 0 1' 2' 3'

SCALE: 1/2" = 1'-0" 0 1' 2' 4'

SCALE: 1/4" = 1'-0" 0 2' 4' 8'

SCALE: 1/8" = 1'-0" 0 4' 8' 16'

SCALE: 1/16" = 1'-0" 0 8' 16' 32'

11/5/2026 5:09:17 PM

Area Schedule (Life Safety)

Name	Location	Function of Space	Area	Area per Occupant	Calculated Occupancy
ADMIN. AREA		BUSINESS	570 SF	150	4
Area			299 SF		
Area			225 SF		
Area			899 SF		
Area			159 SF		
Area			143 SF		
Area			245 SF		
BOILER ROOM		A$#M	269 SF	300	1
CAFETERIA		ASSEMBLY UNCONCENTRATED	2077 SF	15	139
CLASSROOM		EDUCATION	Not Placed	20	
CLASSROOM		CLASSROOM	1151 SF	20	58
CLASSROOM		CLASSROOM	933 SF	20	47
CLASSROOM		CLASSROOM	850 SF	20	43
CLASSROOM		CLASSROOM	864 SF	20	44
CLASSROOM		CLASSROOM	858 SF	20	43
CLASSROOM		CLASSROOM	860 SF	20	44
CLASSROOM		CLASSROOM	856 SF	20	43
CLASSROOM		CLASSROOM	827 SF	20	42
CLASSROOM		CLASSROOM	784 SF	20	40
CLASSROOM		CLASSROOM	790 SF	20	40
CLASSROOM		CLASSROOM	808 SF	20	41
CLASSROOM		CLASSROOM	789 SF	20	40
CLASSROOM		CLASSROOM	889 SF	20	45
CLASSROOM		CLASSROOM	890 SF	20	45
CLASSROOM		CLASSROOM	808 SF	20	41
CLASSROOM		CLASSROOM	459 SF	20	23
CLASSROOM		CLASSROOM	808 SF	20	41
CLASSROOM		CLASSROOM	788 SF	20	40
CLASSROOM		CLASSROOM	788 SF	20	40
CLASSROOM		CLASSROOM	782 SF	20	40
CLASSROOM		CLASSROOM	788 SF	20	40
CLASSROOM		CLASSROOM	843 SF	20	43
CLASSROOM		CLASSROOM	840 SF	20	43
CLASSROOM		CLASSROOM	840 SF	20	42
CLASSROOM		CLASSROOM	831 SF	20	42
CLASSROOM		CLASSROOM	872 SF	20	44
CLASSROOM		CLASSROOM	880 SF	20	45
CLASSROOM		CLASSROOM	874 SF	20	44
CLASSROOM		CLASSROOM	872 SF	20	44
CLINIC		BUSINESS	111 SF	150	1
CLOSET		A$#M	7 SF	300	1
COAL STOR.		A$#M	172 SF	300	1
CONFERENCE		ASSEMBLY UNCONCENTRATED	103 SF	15	7
CONFERENCE		ASSEMBLY UNCONCENTRATED	144 SF	15	10
ELECTRICAL		A$#M	77 SF	300	1

Area Schedule (Life Safety)

Name	Location	Function of Space	Area	Area per Occupant	Calculated Occupancy
ELECTRICAL		A$#M	74 SF	300	1
GYMNASIUM		EXERCISE ROOM	3500 SF	50	71
ISOLATION		BUSINESS	49 SF	150	1
JAN.		A$#M	17 SF	300	1
JAN.?		A$#M	21 SF	300	1
JANITOR		A$#M	22 SF	300	1
KINDERGARTEN		CLASSROOM	632 SF	20	32
KINDERGARTEN		CLASSROOM	647 SF	20	33
KITCHEN		KITCHEN	294 SF	200	2
LAUNDRY		A$#M	18 SF	300	1
LIBRARY		LIBRARY READING RM	3713 SF	50	75
MECH. ROOM		A$#M	746 SF	300	3
MECH/ELEC?		A$#M	469 SF	300	2
MUSIC		CLASSROOM	856 SF	20	43
MUSIC		CLASSROOM	959 SF	20	48
NURSE		BUSINESS	85 SF	150	1
OFFICE		BUSINESS	197 SF	150	2
OFFICE		BUSINESS	178 SF	150	2
OFFICE		BUSINESS	161 SF	150	2
OFFICE		BUSINESS	82 SF	150	1
OFFICE?		BUSINESS	97 SF	150	1
OFFICE?		BUSINESS	114 SF	150	1
OFFICE?		BUSINESS	69 SF	150	1
SCIENCE		CLASSROOM	850 SF	20	43
STORAGE		A$#M	100 SF	300	1
STORAGE		A$#M	28 SF	300	1
STORAGE		A$#M	50 SF	300	1
STORAGE		A$#M	95 SF	300	1
STORAGE		A$#M	95 SF	300	1
STORAGE		A$#M	50 SF	300	1
STORAGE		A$#M	671 SF	300	3
STORAGE		A$#M	65 SF	300	1
STORAGE		A$#M	65 SF	300	1
STORAGE		A$#M	20 SF	300	1
STORAGE		A$#M	20 SF	300	1
STORAGE		A$#M	142 SF	300	1
STORAGE?		A$#M	163 SF	300	1
TEACHERS		BUSINESS	111 SF	150	1
WAITING		ASSEMBLY CONCENTRATED	257 SF	7	37
WH CLOSET		A$#M	25 SF	300	1
WORKROOM		BUSINESS	345 SF	150	3
WORKROOM?		BUSINESS	462 SF	300	2
Grand total: 87					1813

CODE REVIEW

ZONING - MUNICIPAL, MANCHESTER
LOCATOR# 24PG10413, LAND USE 681, MUNICODE 094

ST LOUIS COUNTY APPLICABLE CODES:
2015 - INTERNATIONAL BUILDING CODE (IBC)
2015 - INTERNATIONAL EXISTING BUILDING CODE (IEBC)
2014 - NATIONAL ELECTRICAL CODE (NEC)
2015 - UNIFORM PLUMBING CODE (UPC)
2015 - INTERNATIONAL MECHANICAL CODE (IMC)
2015 - INTERNATIONAL ENERGY CONSERVATION CODE
2015 - INTERNATIONAL FUEL GAS CODE (IFGC)

WEST COUNTY EMS & FIRE DISTRICT APPLICABLE CODES:
2024 - INTERNATIONAL FIRE CODE (IFC) & LOCAL ORDINANCES
2024 - INTERNATIONAL BUILDING CODE (IBC)
2024 - INTERNATIONAL EXISTING BUILDING CODE (IEBC)
2024 WEST COUNTY OVERARCHING BUILDING & FIRE CODE

GENERAL SCOPE OF WORK:
THIS PROJECT CONSISTS OF: CIVIL IMPROVEMENTS INCLUDING REPLACEMENT OF PORTIONS OF PARKING LOT PAV-004 WITH NEW 2 GRATE INLET STRUCTURE, CURB ALONG SOUTH SIDE OF PARKING LOT 4 AND RE-GRADING TO ADDRESS DRAINAGE ISSUES, CONCRETE SIDEWALK SID-013, A PORTION OF PAV-007, REPLACEMENT OF EXTERIOR CONCRETE STAIRS EST-004, EST-006 & LOWER LANDING, AND EST-008 INCLUDING SURROUNDING RETAINING WALL (SEE ALT. #2 FOR EXTENTS) & FENCE, RAILINGS AND GATE AT EST-008 PER CIVIL DRAWNGS, REPLACEMENT OF EXTERIOR DOORS C1W DOORS WITH CENTER SIDELIGHT, (C1X DOORS WITH CENTER SIDELIGHT PER ALTERNATE #1) AND PAIR OF DOORS EXT-210), AND REPLACEMENT OF 6 EXTERIOR WINDOWS (505, 507, 508, 510, 511, AND 513,) AND ASBESTOS ABATEMENT AS REQUIRED FOR IMPLEMENTATION OF THE WORK DESCRIBED ABOVE.

CODE REVIEW:
BUILDING WORK IS LIMITED TO MINOR ALTERATIONS TO AN EXISTING FACILITY.
WORK TO BUILDING CONSISTS OF REPLACEMENT OF DOORS AND FRAMES AT (EXD-C1W) INCLUDING SIDELITE BETWEEN THEM AT CORRIDOR C1W & PAIR OF DOORS AND FRAME (EXD-210) AT LOWER LEVEL OLD BOILER ROOM 210. REPLACEMENT OF 6 EXTERIOR CLASSROOM WINDOWS (505, 507, 508, 510, 511 & 513.
THERE IS NO CHANGE TO AREA, HEIGHT OF BUILDING OR OCCUPANCY LOAD, NO CHANGE TO CONFIGURATION, TRAVEL DISTANCE, PATH OF EGRESS, EGRESS WIDTHS, NUMBER OR CAPACITY OF EXITS. (WORK IS EXPECTED TO BE COMPLETED WHEN THE FACILITY IS NOT IN USE.)

RENOVATION, SPRINKLERED - NO
EXISTING BUILDING USE GROUP (305): EDUCATIONAL GROUP E
EXISTING BUILDING CONSTRUCTION TYPE (602.2): II-B
(NOTE: ASSEMBLY SPACES SUCH AS CAFETERIA , AUDITORIUMS, GYMS, LIBRARIES AND SIMILAR SPACES ARE ANCILLARY TO EDUCATION OCCUPANCY, DO NOT CONSTITUTE SEPARATE OCCUPANCIES FOR THE PURPOSE OF MIXED USE CALCULATIONS.)

ACTUAL EXISTING BUILDING HEIGHT (NO CHANGE)
= 23'-5" S.F., 1 STORY ABOVE GRADE

ACTUAL (EXIST) BUILDING AREA (NO CHANGE)
ACTUAL (EXIST) LEVEL 1 BUILDING AREA = 66,038 +/- SF
ACTUAL (EXIST) LOWER LEVEL BUILDING AREA = 3,010 +/- SF

EXISTING FIRE-RESISTANCE RQMTS. FOR BUILDING ELEMENTS:
(PER 2015 IBC TABLE 601)

PRIMARY STRUCTURAL FRAME	0
BEARING WALLS	
EXTERIOR	0
INTERIOR	0
NONBEARING WALLS & PARTITIONS	
EXTERIOR (IBC 2015 T 602, 2021 T 705.5)	0
INTERIOR	0
FLOOR CONSTRUCTION & SECONDARY MEMBERS	0
ROOF CONSTRUCTION & SECONDARY MEMBERS	0
CORRIDOR (>30) OCC SEPARATION (TABLE 1020.1) (NS)	1 HR.

NUMBER OF EXITS
(NO CHANGE)

EGRESS WIDTH
(NO CHANGE)

bond architects
222 SOUTH CENTRAL AVE.
SUITE# 501
ST. LOUIS, MO 63105
TEL: 314.863.4994
FAX: 314.863.4996
www.bondarchitectsinc.com
Bond Architects, Inc.
Missouri State Certificate of Authority # 2009027409

COLE Design Group
Civil Engineer
Project Number: 26-0052
Certificate of Authority #
401 S. 18th Street, Suite 200
St Louis, MO 63103
314.984.9887 tel

RTM Engineering Consultants
MEP / FP Engineer
Project Number: 26.B00203.1928
Certificate of Authority #2002028690
3701 Lindbergh Blvd.
St Louis, MO 63127
314.725.5889 tel

CASE Engineering
STRUCTURAL Engineer
Project Number: BDA-MO-05-26
Certificate of Authority #001498
796 Merus Ct.
Fenton, MO 63026
636.349.1600 tel

Barretts Elementary School

1780 CARMAN RD., MANCHESTER, MO 63021
Parkway Project #: PN012501B
BUILDING RENOVATION & SITE IMPROVEMENTS

Parkway School District
363 N. Woods Mill Rd.
Chesterfield, MO 63017
314.415.8231 tel

Project No: 26016

Revisions

Description	Date

This drawing and the details on it are the sole property of the architect and may be used for this specific project only. It shall not be loaned, copied or reproduced, in whole or in part, or for any other purpose or project without the written consent of the Architect. Copyright © 2023 by Bond Architects, Inc.

STATE OF MISSOURI
MICHELLE R. WELLS
NUMBER A-2021031961
ARCHITECT
11/12/26

The Professional Architects seal affixed to this sheet applies only to the material and items shown on this sheet. All drawings, instruments or other documents not exhibiting this seal shall not be considered prepared by this architect, and this architect expressly disclaims any and all responsibility for such plan, drawings or documents not exhibiting this seal.

DATE: 11/12/2026

BID/ PERMIT SET

CODE INFORMATION

A0.1

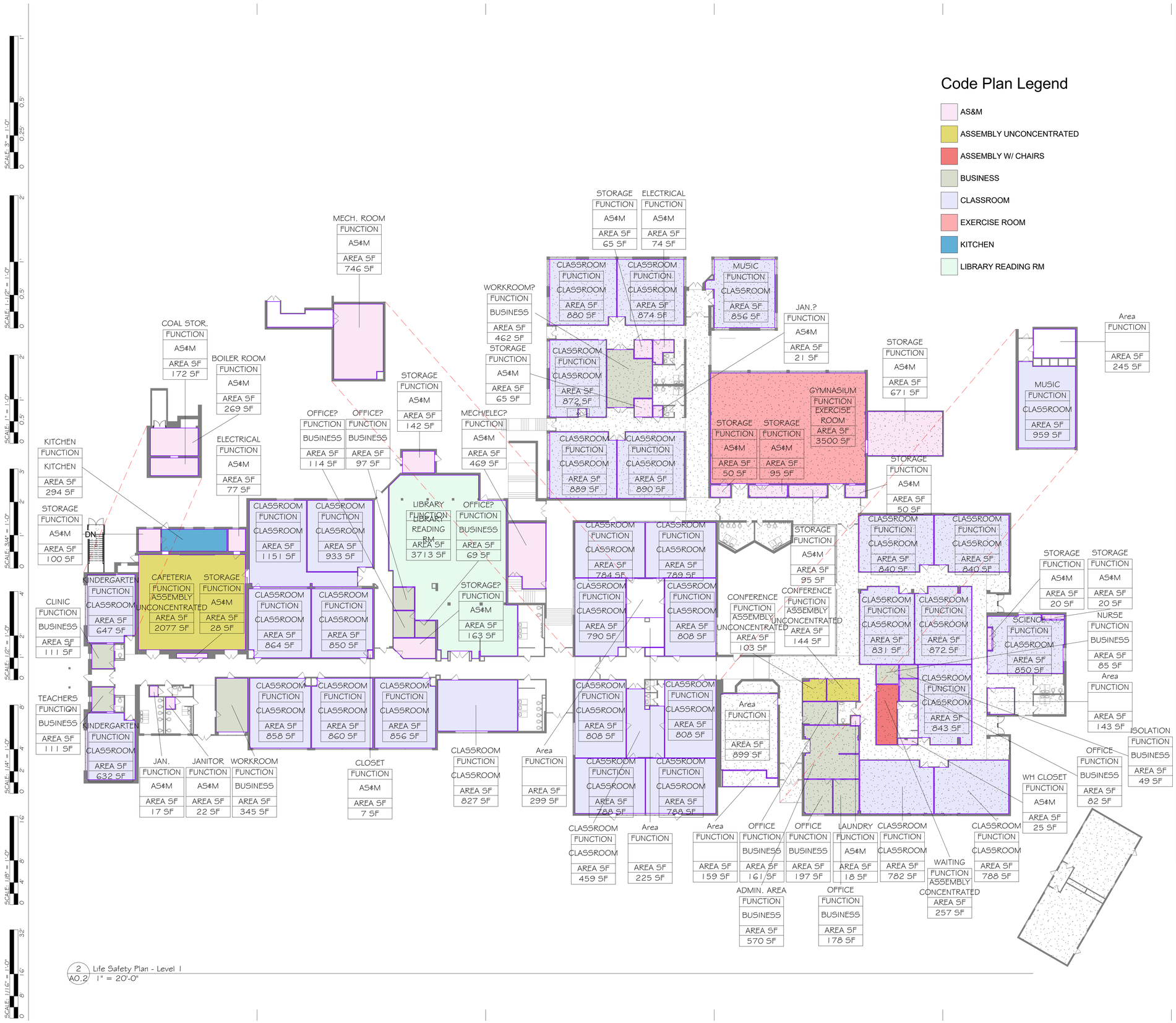

Code Plan Legend

- AS&M
- ASSEMBLY UNCONCENTRATED
- ASSEMBLY W/ CHAIRS
- BUSINESS
- CLASSROOM
- EXERCISE ROOM
- KITCHEN
- LIBRARY READING RM

2 Life Safety Plan - Level 1
A0.2 1" = 20'-0"

11/5/2026 5:09:18 PM

CODE REVIEW

ZONING - MUNICIPAL, MANCHESTER
LOCATOR# 24PG10413, LAND USE 681, MUNICODE 094

ST LOUIS COUNTY APPLICABLE CODES:
2015 - INTERNATIONAL BUILDING CODE (IBC)
2015 - INTERNATIONAL EXISTING BUILDING CODE (IEBC)
2014 - NATIONAL ELECTRICAL CODE (NEC)
2015 - UNIFORM PLUMBING CODE (UPC)
2015 - INTERNATIONAL MECHANICAL CODE (IMC)
2015 - INTERNATIONAL ENERGY CONSERVATION CODE
2015 - INTERNATIONAL FUEL GAS CODE (IFGC)

WEST COUNTY EMS & FIRE DISTRICT APPLICABLE CODES:
2024 - INTERNATIONAL FIRE CODE (IFC) & LOCAL ORDINANCES
2024 - INTERNATIONAL BUILDING CODE (IBC)
2024 - INTERNATIONAL EXISTING BUILDING CODE (IEBC)
2024 WEST COUNTY OVERARCHING BUILDING & FIRE CODE

GENERAL SCOPE OF WORK: THIS PROJECT CONSISTS OF: REPLACEMENT OF PORTIONS OF PARKING LOT AND DRIVE PAV-004, CONCRETE SIDEWALK SID-013, REPLACEMENT OF EXTERIOR CONCRETE STAIRS EST-004, EST-006 AND EST-008 INCLUDING FENCE, AND GATES AROUND EST-008. REPLACEMENT OF APPROXIMATELY 3 EXTERIOR DOORS AS SHOWN ON PLANS, AND REPLACEMENT OF APPROXIMATELY 6 EXTERIOR WINDOWS AS SHOWN ON PLANS, AND ASBESTOS ABATEMENT FLOORING, CEILING, AND WALLBOARD AS REQUIRED FOR IMPLEMENTATION OF THE WORK DESCRIBED ABOVE.

CODE REVIEW:
BUILDING WORK IS LIMITED TO MINOR ALTERATIONS TO AN EXISTING FACILITY.
(WORK TO BUILDING CONSISTS OF REPLACEMENT OF 3 DOORS & 6 WINDOWS.)
THERE IS NO CHANGE TO AREA, HEIGHT OF BUILDING OR OCCUPANCY LOAD,
NO CHANGE TO CONFIGURATION, TRAVEL DISTANCE, PATH OF EGRESS, EGRESS WIDTHS, NUMBER OR CAPACITY OF EXITS.
(WORK IS EXPECTED TO BE COMPLETED WHEN THE FACILITY IS NOT IN USE.)

RENOVATION, SPRINKLERED - NO
EXISTING BUILDING USE GROUP (305): EDUCATIONAL GROUP E
EXISTING BUILDING CONSTRUCTION TYPE (602.2): II-B
(NOTE: ASSEMBLY SPACES SUCH AS CAFETERIA , AUDITORIUMS, GYMS, LIBRARIES AND SIMILAR SPACES ARE ANCILLARY TO EDUCATION OCCUPANCY, DO NOT CONSTITUTE SEPARATE OCCUPANCIES FOR THE PURPOSE OF MIXED USE CALCULATIONS.)

ACTUAL EXISTING BUILDING HEIGHT (NO CHANGE)
= 23'-5", 1 STORY ABOVE GRADE

ACTUAL BUILDING AREA - (NO CHANGE)
ACTUAL (EXIST) LEVEL 1 BUILDING AREA = 66,038 +/- SF
ACTUAL (EXIST) LOWER LEVEL BUILDING AREA = 3,010 +/- SF

EXISTING FIRE-RESISTANCE RQMTS, FOR BUILDING ELEMENTS:
(PER 2015 IBC TABLE 601)

PRIMARY STRUCTURAL FRAME	0
BEARING WALLS	
EXTERIOR	0
INTERIOR	0
NONBEARING WALLS & PARTITIONS	
EXTERIOR (IBC 2015 T 602, 2021 T 705.5)	0
INTERIOR	0
FLOOR CONSTRUCTION & SECONDARY MEMBERS	0
ROOF CONSTRUCTION & SECONDARY MEMBERS	0
CORRIDOR (>30) OCC SEPARATION (TABLE 1020.1) (NS)	1 HR.

NUMBER OF EXITS
(NO CHANGE)

EGRESS WIDTH
(NO CHANGE)

LEGEND

- 1 HOUR FIRE BARRIER
- 2 HOUR FIREWALL
- STORM SHELTER AREA
- EGRESS ACTUAL / MAX CAPACITY — EGRESS CAPACITY OF DOOR & DIRECTION
- EGRESS ACTUAL / MAX CAPACITY — EGRESS CAPACITY OF STAIR & DIRECTION
- FEC — FIRE EXTINGUISHER CABINET

NAME OF SPACE
FUNCTION
PER TABLE 1004.1.1
AREA (SF)
AREA OF SPACE

bond architects
222 SOUTH CENTRAL AVE.
SUITE# 501
ST. LOUIS, MO 63105
TEL: 314.863.4994
FAX: 314.863.4996
www.bondarchitectsinc.com
Bond Architects, Inc.
Missouri State Certificate of Authority # 2009027409

COLE Design Group
Civil Engineer
Project Number: 26-0052
Certificate of Authority #
401 S. 18th Street, Suite 200
St Louis, MO 63103
314.984.9887 tel

RTM Engineering Consultants
MEP / FP Engineer
Project Number: 26.B00203.1928
Certificate of Authority #2002028690
3701 Lindbergh Blvd.
St Louis, MO 63127
314.725.5889 tel

CASE Engineering
STRUCTURAL Engineer
Project Number: BDA-MO-05-26
Certificate of Authority #001498
796 Merus Ct.
Fenton, MO 63026
636.349.1600 tel

Barretts Elementary School

1780 CARMAN RD., MANCHESTER, MO 63021
Parkway Project #: PN012501B
BUILDING RENOVATION & SITE IMPROVEMENTS

Parkway School District
363 N. Woods Mill Rd.
Chesterfield, MO 63017
314.415.8231 tel

Project No: 26016

Revisions

Description	Date

This drawing and the details on it are the sole property of the architect and may be used for this specific project only. It shall not be loaned, copied or reproduced, in whole or in part, or for any other purpose or project without the written consent of the Architect. Copyright © 2023 by Bond Architects, Inc.

STATE OF MISSOURI
MICHELLE R. WELLS
NUMBER A-2021031961
ARCHITECT
11/12/26

The Professional Architects seal affixed to this sheet applies only to the material and items shown on this sheet. All drawings, instruments or other documents not exhibiting this seal shall not be considered prepared by this architect, and this architect expressly disclaims any and all responsibility for such plan, drawings or documents not exhibiting this seal.

DATE: 11/12/2026

BID/ PERMIT SET

LIFE SAFETY PLAN

A0.2

Save

STANDARD ABBREVIATIONS

&	And
@	At
ABV	Above
ACT	Acoustic Ceiling Tile
ADA	Amencan with Disabilities Act
ADJ	Adjacent
AFF	Above Finish Floor
ALUM	Aluminum
APROX	Approximate
BLDG	Building
BLK	Block
BLKG	Blocking
BM	Beam
BO	Bottom Of
CAB	Cabinetry
CB	Chalk Board
CJ	Construction/Control Joint
CL	Center Line
CLG	Ceiling
CLR	Clear
CMU	Concrete Masonry Unit
CO	Clean Out
COL	Column
CONC	Concrete
CONST	Construction
CONT	Continuous
CPT	Carpet
CPCI	Contractor Provided Contractor Installed
CPOI	Contractor Provided Owner Installed
CSDO	Cased Opening
CT	Ceramic Tile
DF	Drinking Fountain
DIA	Diameter
DR	Door
DS	Downspout
DTL	Detail
DWG	Drawing
EJ	Expansion Joint
EL	Elevation
ELEC	Electrical
ELEV	Elevator
EQ	Equal
EQIV	Equivalent
EWC	Electric Water Cooler
EXIST	Existing
EXP	Exposed
EXT	Exterior
FD	Floor Drain
FEC	Fire Extinguisher Cabinet
FIN	Finish
FLR	Floor
FO	Face Of
FT	Feet
FRT	Fire Retardant Treated
FTG	Footing
GC	General Contractor
GFI	Ground Fault Interrupter
GYP	Gypsum Board
HDR	Header
HM	Hollow Metal
HORZ	Horizontal
HR	Hour
HVAC	Heating Ventilating and Air Conditioning
ID	Inside Diameter
INSUL	Insulation
INT	Interior
JAN	Janitor
LAV	Lavatory (Sink)
MB	Marker Board
MDF	Medium Density Fiberboard
MECH	Mechanical
MFR	Manufacturer
MIN	Minimum
MISC	Miscellaneous
MO	Masonry Opening
MTL	Metal
NIC	Not In Contract
NTS	Not To Scale
OC	On Center
OD	Outside Diameter
OH	Opposite Hand
OPCI	Owner Provided Contractor Installed
OPNG	Opening
OPP	Opposite
OPOI	Owner Provided Owner Installed
OSB	Oriented Strand Board
PL	Plate
PLAM	Plastic Laminate
PLAS	Plaster
PLUM	Plumbing
PLYWD	Plywood
PNT	Paint
PRLAM	Parallam
PT	Porcelain Tile
PVC	Polyvinyl Chloride
QT	Quarry Tile
QTY	Quantity
R	Riser
RB	Rubber Base
RD	Roof Drain
REINF	Reinforcing
REQD	Required
RM	Room
RO	Rough Opening
SC	Solid Core
SECT	Section
SHT	Sheet
SIM	Similar
SPEC	Specification
SSTL	Stainless Steel
STD	Standard
STL	Steel
STOR	Storage
STRUC	Structural
SV	Sheet Vinyl
T	Tread
TB	Tack Board
TNG	Tongue & Groove
TO	Top Of
TYP	Typical
UNO	Unless Noted Otherwise
VB	Vinyl Base
VCT	Vinyl Composition Tile
VERT	Vertical
VIF	Verify In Field
VWC	Vinyl Wall Covering
w/	With
w/o	Without
WC	Water Closet (Toilet)
WD	Wood
WDW	Window
WPR	Waterproofing
WWF	Welded Wire Fabric

SCALE: 3" = 1'-0"

SCALE: 1 1/2" = 1'-0"

SCALE: 1" = 1'-0"

SCALE: 3/4" = 1'-0"

SCALE: 1/2" = 1'-0"

SCALE: 1/4" = 1'-0"

SCALE: 1/8" = 1'-0"

SCALE: 1/16" = 1'-0"

11/5/2026 5:09:19 PM

GENERAL NOTES

1. VERIFY AND COORDINATE ALL DIMENSIONS AT JOB SITE FOR COMPARISON WITH DRAWINGS AND SPECIFICATIONS PRIOR TO BIDDING AND START OF AND DURING CONSTRUCTION. IF ANY DISCREPANCIES, INCONSISTENCIES OR OMISSIONS ARE FOUND, THE ARCHITECT SHALL BE NOTIFIED, IN WRITING, FOR CLARIFICATION PRIOR TO PROCEEDING WITH WORK.
2. IF DISCREPANCIES ARE FOUND WITHIN CONTRACT DOCUMENTS AND PROJECT MANUAL, OR IN THE CASE OF CONFLICT BETWEEN THE DRAWINGS AND THE SPECIFICATIONS, THE MOST DEMANDING AND/OR COST INTENSIVE REQUIREMENT SHALL TAKE PRECEDENCE UNLESS OTHERWISE AGREED BY THE ARCHITECT IN WRITING. NOTIFY THE ARCHITECT & GENERAL CONTRACTOR OF ANY CONFLICT AND GET CLARIFICATION FROM ARCHITECT BEFORE PROCEEDING WITH THE WORK.
3. DO NOT SCALE DRAWINGS. RELY ON WRITTEN DIMENSIONS GIVEN. NOTIFY THE ARCHITECT FOR CLARIFICATIONS. ALL DIMENSIONS SHALL BE FIELD VERIFIED AND COORDINATED WITH ALL OF THE WORK OF ALL TRADES. IF DISCREPANCIES ARE FOUND, NOTIFY THE ARCHITECT IN WRITING FOR CLARIFICATION BEFORE THE COMMENCEMENT OR RESUMPTION OF WORK.
4. VERIFY ALL COLUMN COORDINATES AND CHECK AGAINST DIMENSIONS SHOWN ON PLANS AND DETAILS.
5. IN THE CASE OF CONFLICT BETWEEN THE DRAWINGS AND THE SPECIFICATIONS, NOTIFY THE ARCHITECT IN WRITING. NOTIFY THE CONSTRUCTION MANAGER/GENERAL CONTRACTOR OF ANY CONFLICT AND GET CLARIFICATION FROM ARCHITECT BEFORE PROCEEDING WITH THE WORK.
6. ABBREVIATIONS THROUGHOUT THE PLANS ARE THOSE IN COMMON USE. NOTIFY THE ARCHITECT OF ANY ABBREVIATIONS IN QUESTION.
7. DIMENSIONS SHOWN ON FLOOR PLANS, SECTIONS, ELEVATIONS, AND DETAILS ARE TO FINISH FACE OF PARTITIONS, MASONRY, OR COLUMN GRID LINES, UNLESS OTHERWISE NOTED.
8. COORDINATE THE INSTALLATION OF THE VARIOUS TRADE ITEMS WITHIN THE SPACE ABOVE ALL CEILINGS (INCLUDING, BUT NOT LIMITED TO: STRUCTURAL MEMBERS, MECHANICAL DUCTS AND INSULATION, CONDUITS, RACEWAYS, SPRINKLER SYSTEM, LIGHT FIXTURES,CEILING SYSTEMS, AND ANY SPECIAL STRUCTURAL SUPPORTS REQUIRED) AND MAINTAIN THE FINISH CEILING HEIGHT ABOVE THE FINISH FLOOR INDICATED IN THE DRAWINGS AND THE FINISH SCHEDULE. (CEILING HEIGHT DIMENSIONS ARE TO THE FINISH SURFACE OF CEILING).
9. PROVIDE AND INSTALL ACCESS PANELS WHERE SHOWN ON THE REFLECTED CEILING PLANS AND AS REQUIRED BY BUILDING CODE OR FOR THE PROPER OPERATION OR MAINTENANCE OF MECHANICAL OR ELECTRICAL EQUIPMENT, WHETHER OR NOT INDICATED ON THE DRAWINGS. COORDINATE SIZE, LOCATION, AND TYPE OF ACCESS PANEL WITH OTHER WORK AND RECEIVE APPROVAL OF THE ARCHITECT. ACCESS PANEL SHALL BE AS SPECIFIED.
10. WHERE ADJOINING ROOMS HAVE DIFFERENT TYPES OF FLOORING OR SIMILAR FLOORING OF DIFFERENT COLORS, MAKE TRANSITION UNDER CENTER LINE OF DOOR LEAF UNLESS NOTED OTHERWISE.
11. ROOM FINISHES SHOWN IN THE FINISH SCHEDULE SHALL APPLY TO ALL ALCOVES, FREESTANDING COLUMNS, OR OTHER ANCILLARY SPACES ADJOINING THE SCHEDULED ROOM UNLESS OTHERWISE NOTED.
12. ALL EXPANSION JOINTS IN THE FINISHED AREA EXPOSED TO VIEW SHALL BE COVERED WITH EXPANSION JOINT COVERS APPROPRIATE FOR THE FINISHED SURFACE, WHETHER FLOOR, CEILING, WALL, OR JUNCTIONS THEREOF.
13. FOR ALL METAL STUD PARTITIONS, INSTALL DOUBLE STUDS (MIN) AT DOOR FRAME JAMBS. INSTALL STUD TRACKS AT EACH SIDE OF OPENING, AT FRAME HEAD HEIGHT AND BETWEEN STUDS AND ADJACENT STUDS.
14. INSTALL ALL WORK PLUMB, LEVEL, TRUE, SQUARE, STRAIGHT AND IN PROPER ALIGNMENT WITH NO DISTORTIONS, PROVIDE SHIMS AS REQUIRED.
15. PROVIDE AND INSTALL CORNER BEADS, EDGE TRIM, JOINT MATERIALS AND FASTENERS TO ENSURE PROPER INSTALLATION OF GYPSUM WALL BOARD. PLACE CORNER BEADS AT EXTERNAL CORNERS. PLACE TAPED EDGE TRIM WHERE GYPSUM BOARD ABUTS DISSIMILAR MATERIALS.
16. INTERIOR METAL STUD PARTITIONS SHALL BE FACED WITH 5/8 INCH TYPE X GYPSUM WALL BOARD UNLESS NOTED OTHERWISE.
17. PROVIDE LATERAL BRACING OF INTERIOR PARTITIONS THAT DO NOT EXTEND TO DECK ABOVE AS REQUIRED TO MEET LOCAL REQUIREMENTS FOR SEISMIC BRACING, UNO.
18. INSTALLATION OF SUSPENDED CEILING SYSTEMS SHALL MEET LOCAL CODE REQUIREMENTS FOR SEISMIC BRACING.
19. WHERE INDICATED ON THE DRAWINGS, PROVIDE ACOUSTIC BLANKETS IN PARTITIONS TIGHT WITHIN SPACE, AROUND CUT OPENINGS, BEHIND AND AROUND ELECTRICAL AND MECHANICAL ITEMS WITHIN OR BEHIND PARTITIONS, AND TIGHT TO ITEMS PASSING THROUGH PARTITIONS.
20. ALL STAIRS AND SHAFTS TO BE RATED 1HR UNLESS NOTED OTHERWISE. SEAL ALL PENETRATIONS PER UL STANDARD ASSEMBLIES OR EQUAL BY APPROVED AGENCY
21. ALL CONCEALED WOOD (PLYWOOD SHEATHING, BLOCKING, ETC.) TO BE FIRE TREATED.
22. PROVIDE FIRE TREATED 2 INCH X 6 INCH NOMINAL WOOD BLOCKING OR EQUIVALENT METAL STRAPPING RUNNING CONTINUOUSLY BETWEEN STUDS FOR ALL WALL HUNG EQUIPMENT OR OTHER ITEMS ATTACHED TO GYPSUM WALL BOARD PARTITIONS.
23. WHERE FIRE EXTINGUISHER CABINETS AND OTHER EQUIPMENT ARE RECESSED IN FIRE RATED PARTITIONS, MODIFY PARTITIONS AS REQUIRED TO PROVIDE CONTINUOUS ENCLOSURE TO ENSURE UNINTERRUPTED FIRE RATING.
24. PROVIDE AND INSTALL ALL STIFFENERS, BRACING, BACK-UP PLATES AND SUPPORTING BRACKETS REQUIRED FOR THE INSTALLATION OF ALL CASEWORK, TOILET ACCESSORIES AND OF ALL FLOOR-MOUNTED OR SUSPENDED MECHANICAL AND ELECTRICAL EQUIPMENT.
25. PROVIDE FIRE SAFING INSULATION PER UL LISTED REQ'D AT ALL PIPE, DUCT, ELECTRICAL, ETC., PENETRATIONS THROUGH CONCRETE FLOOR SLABS AND AT FIRE AND SMOKE WALLS.
26. ALL DUCT PENETRATIONS THROUGH PARTITIONS AND CEILING SHALL BE PROVIDED WITH NECESSARY FRAMES AND BRACING AROUND THE OPENING AND SHALL BE PROVIDED WITH AUTOMATIC FIRE DAMPERS AS REQUIRED BY THE BUILDING DEPARTMENT FOR FIRE-RATED PARTITIONS.
27. ALL EXPOSED STEEL ANGLES, PLATES, ETC., SHALL BE GALVANIZED FOR CORROSION RESISTANCE UNLESS NOTED OTHERWISE.
28. NOTIFY ARCHITECT OF DISCREPANCIES BETWEEN TYPICAL ELEVATION MOUNTING HEIGHTS/LOCATIONS AND MANUFACTURER'S RECOMMENDATIONS FOR ADA COMPLIANCE PRIOR TO INSTALLATION.
29. CONTRACTOR TO RETAIN FLOATABLE WIND BLOWN MATERIALS ON SITE BY STORING ALL TRASH AND BUILDING MATERIAL WASTE IN ENCLOSURES UNTIL PROPER DISPOSAL AT AN OFF-SITE FACILITY. CONTRACTOR TO CHECK ADJACENT AREAS DAILY AND PICK UP CONSTRUCTION WASTE MATERIAL AND DEBRIS THAT HAVE BLOWN OR WASHED OFF-SITE.
30. SEE CODE PLANS FOR FEC AND FE LOCATIONS, RATED PARTITIONS
31. ALIGN FINISH FACE OF NEW PARTITION WITH FINISH FACE OF FURRED OUT PARTITION, UON.
32. CONTRACTOR TO VERIFY FLOOR FLATNESS AFTER DEMO AND PARTITIONS AND STOREFRONTS ARE MARKED ON FLOOR. IF FLOOR IS OUT OF FLATNESS BY MORE THAN SPECIFIED IN 03 30 00, APPLY HYDRAULIC CEMENT UNDERLAYMENT SPECIFIED IN 03 54 16 TO CORRECT FLOOR PRIOR TO CONSTRUCTION OF ALL PARTITIONS AND STOREFRONTS. PROVIDE UNIT COST.
33. CONTRACTOR IS RESPONSIBLE FOR PROVIDING TEMPORARY PROTECTION, FENCING AND PARTITIONS AS NECESSARY
34. IF HAZARDOUS MATERIAL IS ENCOUNTERED NOTIFY ARCHITECT & OWNER IMMEDIATELY.
35. UNLESS SPECIFICALLY INDICATED OTHERWISE, THE SAME WALL TYPE NEXT TO A DOOR OR OPENING SHALL CONTINUE OVER THE DOOR, OPENING OR STOREFRONT.
36. IN THE ABSENCE OF A WRITTEN DIMENSION, OR IN CASE OF DOUBT AS TO THE PROPER MEASUREMENT, CONSULT THE ARCHITECT FOR CLARIFICATION.
37. TYPICAL DETAILS THROUGHOUT THE DRAWING SET SHALL APPLY FOR ALL APPLICABLE CONDITIONS EVEN IF NOT SPECIFICALLY SHOWN OR REFERENCED.
38. UNLESS SPECIFICALLY NOTED OTHERWISE, ENCLOSE ALL VERTICAL MECHANICAL PIPES, RAIN LEADERS, ETC. WITH 4" CMU OR GYPSUM BOARD TO MATCH SURROUNDING FINISHES.
39. PROVIDE CONTINUOUS CONTROL JOINT IN EXTERIOR CLADDING MATERIAL AT CONDITIONS WHERE STRUCTURAL WALL BACK UP CHANGES CONSTRUCTION TYPE.

bond architects
222 SOUTH CENTRAL AVE.
SUITE# 501
ST. LOUIS, MO 63105
TEL: 314.863.4994
FAX: 314.863.4996
www.bondarchitectsinc.com
Bond Architects, Inc.
Missouri State Certificate of Authority # 2009027409

COLE Design Group
Civil Engineer
Project Number: 26-0052
Certificate of Authority #
401 S. 18th Street, Suite 200
St Louis, MO 63103
314.984.9887 tel

RTM Engineering Consultants
MEP / FP Engineer
Project Number: 26.B00203.1928
Certificate of Authority #2002028690
3701 Lindbergh Blvd.
St Louis, MO 63127
314.725.5889 tel

CASE Engineering
STRUCTURAL Engineer
Project Number: BDA-MO-05-26
Certificate of Authority #001498
796 Merus Ct.
Fenton, MO 63026
636.349.1600 tel

Barretts Elementary School

1780 CARMAN RD., MANCHESTER, MO 63021
Parkway Project #: PN012501B
BUILDING RENOVATION & SITE IMPROVEMENTS

Parkway School District
363 N. Woods Mill Rd.
Chesterfield, MO 63017
314.415.8231 tel

Project No: 26016

Revisions

Description	Date

This drawing and the details on it are the sole property of the architect and may be used for this specific project only. It shall not be loaned, copied or reproduced, in whole or in part, or for any other purpose or project without the written consent of the Architect. Copyright © 2023 by Bond Architects, Inc.

STATE OF MISSOURI
MICHELLE R. WELLS
NUMBER A-2021031961
ARCHITECT
11/12/26

The Professional Architects seal affixed to this sheet applies only to the material and items shown on this sheet. All drawings, instruments or other documents not exhibiting this seal shall not be considered prepared by this architect, and this architect expressly disclaims any and all responsibility for such plan, drawings or documents not exhibiting this seal.

DATE: 11/12/2026

BID/ PERMIT SET

GENERAL NOTES & ABBREVIATIONS

A0.3

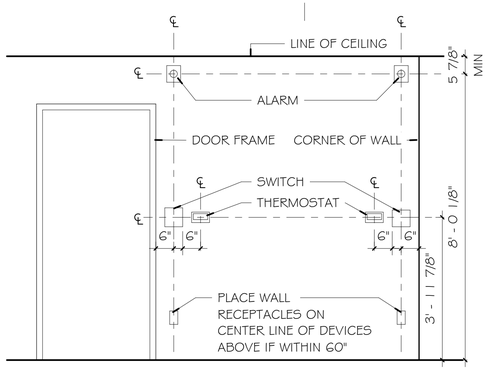

NOTES:

1. ALL DEVICES SHALL BE LOCATED AT A CORNER OR DOOR JAMB AS SHOWN. NOTIFY ARCHITECT OF ANY CONFLICTS.

2. DEVICES NOT TO BE INSTALLED IN FEATURE WALL (GLASS, METAL, STONE, WOOD, ETC) OR CEILING.

3. ALL WALL MOUNTED DEVICE LOCATIONS SHALL BE COORDINATED BY THE GENERAL CONTRACTOR WITH ALL OTHER SUB-CONTRACTORS SO THAT THEY ARE INSTALLED IN AN ORDERLY MANNER (I.E. LIGHT SWITCHES, RECEPTACLES, FIRE ALARM DEVICES, COMMUNICATION DEVICES, THERMOSTATS, ETC.).

4. THE INTENT IS TO HAVE THE DEVICES THAT ARE AT DIFFERENT HEIGHTS ABOVE FINISHED FLOOR AND WITHIN 60" OF ONE ANOTHER HORIZONTALLY, BE INSTALLED ALIGNED VERTICALLY (I.E. RECEPTACLES AND LIGHT SWTICHES OR THERMOSTATS AND FIRE ALARM VISUAL DEVICES) AND THE DEVICES AT THE SAME HEIGHTS ABOVE THE FINISHED FLOOR BE INSTALLED SIDE-BY-SIDE (I.E. RECEPTACLES AND COMMUNICATION DEVICES OR LIGHT SWITCHS AND THERMOSTATS).

5. AFTER METAL STUD FRAMING INSTALLATION, THE GENERAL CONTRACTOR SHALL COORDINATE AND PHYSICALLY MARK THE LOCATION OF ALL DEVICES WITH THE VARIOUS SUB-CONTRACTORS. A PRE-INSTALLATION CONFERENCE SHALL THEN BE HELD WITH THE ARCHITECT/ENGINEER TO FIELD VERIFY DEVICE LOCATIONS.

3 / A0.4 TYPICAL DEVICE LOCATION
1/2" = 1'-0"

ELEVATION SYMBOL LEGEND

- WINDOW TYPE
- DOOR NUMBER
- REFER TO KEYNOTE LEGEND
- CONCRETE MASONRY
- BRICK MASONRY
- METAL PANELS
- PRECAST STONE

PLAN SYMBOLS LEGEND

- EXISTING CONSTRUCTION TO REMAIN
- EXISTING CONSTRUCTION TO BE REMOVED
- NEW CONSTRUCTION

ROOF SYMBOLS LEGEND

- EXISTING MECHANICAL UNIT
- NEW MECHANICAL UNIT
- ROOF DRAIN
- SPLASH PAN
- GAS VENT

SYMBOL LEGEND

- SECTION NUMBER / SHEET NAME
- ELEVATION NUMBER / SHEET NAME
- REVISION CLOUD & NUMBER
- BREAKLINE
- PLAN MATCHLINE
- OUTLINE OF HIDDEN OBJECTS, NIC ITEMS, REMOVED MATERIALS
- CENTER LINE OR FLOOR LINE
- COLUMN GRID LINE
- TRUE NORTH
- ROOM TAG
- DOOR TAG
- WINDOW TAG
- KEYNOTE
- CEILING HEIGHT TAG
- WALL PARTITION TYPE
- ELEVATION

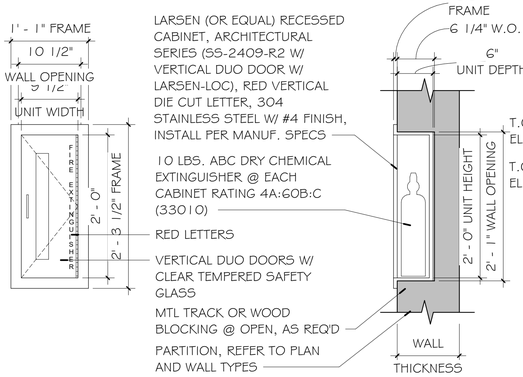

ELEVATION SECTION

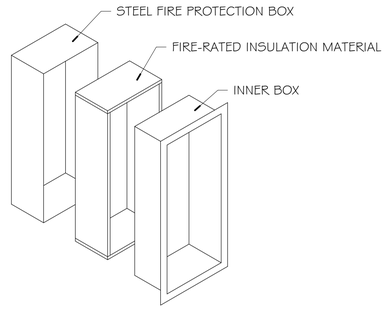

NOTE:
1. EXTINGUISHERS HAVING A GROSS WEIGHT NOT EXCEEDING 40 LBS. SHALL BE INSTALLED SO THAT THE TOP OF THE EXTINGUISHERS IS NOT MORE THAN 5'-0" ABOVE THE FLOOR.

EXTINGUISHERS HAVE A GROSS WEIGHT GREATER THAN 40 LBS. SHALL BE INSTALLED SO THAT THE TOP OF THE EXTINGUISHERS IS NOT MORE THAN 3'-6" ABOVE THE FLOOR.

4 / A0.4 TYP. FIRE EXTINGUISHER CABINET
1" = 1'-0"

LIGHT GAUGE METAL STUD SUPPORT

WIDTH	MAX. UNSUPPORTED HEIGHT	GAUGE	SPACING
3 5/8"	13'-7"	25	24" O.C.
3 5/8"	15'-6"	25	16" O.C.
3 5/8"	17'-1"	25	12" O.C.
3 5/8"	14'-8"	20	24" O.C.
3 5/8"	16'-9"	20	16" O.C.
3 5/8"	18'-5"	20	12" O.C.
3 5/8"	15'-11"	18	24" O.C.
3 5/8"	18'-3"	18	16" O.C.
3 5/8"	20'-1"	18	12" O.C.
3 5/8"	17'-1"	16	24" O.C.
3 5/8"	19'-6"	16	16" O.C.
3 5/8"	21'-6"	16	12" O.C.
6"	19'-2"	25	24" O.C.
6"	21'-11"	25	16" O.C.
6"	24'-2"	25	12" O.C.
6"	21'-8"	20	24" O.C.
6"	24'-9"	20	16" O.C.
6"	27'-3"	20	12" O.C.
6"	23'-9"	18	24" O.C.
6"	27'-2"	18	16" O.C.
6"	29'-11"	18	12" O.C.

NOTE:
1. METAL STUD LENGTHS BASED ON 5/8" GYP. BOARD FULL HEIGHT EACH SIDE OF STUD, 5PSF, L/240

bond architects
222 SOUTH CENTRAL AVE.
SUITE# 501
ST. LOUIS, MO 63105
TEL: 314.863.4994
FAX: 314.863.4996
www.bondarchitectsinc.com
Bond Architects, Inc.
Missouri State Certificate of Authority # 2009027409

COLE Design Group
Civil Engineer
Project Number: 26-0052
Certificate of Authority #
401 S. 18th Street, Suite 200
St Louis, MO 63103
314.984.9887 tel

RTM Engineering Consultants
MEP / FP Engineer
Project Number: 26.B00203.1928
Certificate of Authority #2002028690
3701 Lindbergh Blvd.
St Louis, MO 63127
314.725.5889 tel

CASE Engineering
STRUCTURAL Engineer
Project Number: BDA-MO-05-26
Certificate of Authority #001498
796 Merus Ct.
Fenton, MO 63026
636.349.1600 tel

Barretts Elementary School
1780 CARMAN RD., MANCHESTER, MO 63021
Parkway Project #: PN012501B
BUILDING RENOVATION & SITE IMPROVEMENTS
Parkway School District
363 N. Woods Mill Rd.
Chesterfield, MO 63017
314.415.8231 tel

Project No: 26016

Revisions

Description	Date

This drawing and the details on it are the sole property of the architect and may be used for this specific project only. It shall not be loaned, copied or reproduced, in whole or in part, or for any other purpose or project without the written consent of the Architect. Copyright. © 2023 by Bond Architects, Inc.

STATE OF MISSOURI
MICHELLE R. WELLS
NUMBER A-2021031961
ARCHITECT
11/12/26

The Professional Architects seal affixed to this sheet applies only to the material and items shown on this sheet. All drawings, instruments or other documents not exhibiting this seal shall not be considered prepared by this architect, and this architect expressly disclaims any and all responsibility for such plan, drawings or documents not exhibiting this seal.

DATE: 11/12/2026

BID/ PERMIT SET

GENERAL NOTES & SYMBOLS

A0.4

11/5/2026 5:09:19 PM

Save

SCALE: 3" = 1'-0"
SCALE: 1 1/2" = 1'-0"
SCALE: 1" = 1'-0"
SCALE: 3/4" = 1'-0"
SCALE: 1/2" = 1'-0"
SCALE: 1/4" = 1'-0"
SCALE: 1/8" = 1'-0"
SCALE: 1/16" = 1'-0"

11/5/2026 5:09:19 PM

HAZARDOUS MATERIALS GENERAL NOTES:

ABATEMENT AND HAZARDOUS MATERIALS NOTED IN THESE DOCUMENTS HAVE BEEN PROVIDED BY PARKWAY SCHOOL DISTRICT'S ABATEMENT RECORDS PLANS AND DOCUMENTS. CONTRACTOR TO REVIEW ALL HAZARDOUS MATERIALS DOCUMENTS PRIOR TO THE START OF CONSTRUCTION. BOND ARCHITECTS HAS NO JURISDICTION OVER HANDLING HAZARDOUS MATERIALS.

STOP WORK AND NOTIFY OWNER OF ANY HAZARDOUS MATERIALS ENCOUNTERED THAT WERE NOT PREVIOUSLY IDENTIFIED; OWNER'S CONSULTANT SHALL SAMPLE MATERIAL(S) AND HAVE MATERIAL(S) ANALYZED BY NVLAP-APPROVED LABORATORY. IF FOUND BY OWNER'S CONSULTANT TO BE A HAZARDOUS MATERIAL, ASBESTOS ABATEMENT CONTRACTOR SHALL CONTAIN AND ABATE, REPAIR, OR ENCAPSULATE AS REQUIRED FOR NEW WORK AS DIRECTED BY OWNER.

REGULATED MATERIAL ABATEMENT GENERAL NOTES:

1. REFER TO PINCHIN'S PROJECT INFORMATION PACKET (PROJECT INFORMATION FORM, PHOTOGRAPHS AND REGULATED MATERIALS DRAWINGS) INCLUDED IN PROJECT MANUAL IN CONJUNCTION WITH OWNER PROVIDED HAZARDOUS MATERIAL DRAWINGS PRIOR TO ANY DEMOLITION OR CONSTRUCTION.
2. ANY NOTES ON ARCHITECTURAL DRAWINGS REGARDING HAZARDOUS MATERIALS ARE FOR REFERENCE ONLY. CONTRACTOR TO REFER TO AND COORDINATE WITH PINCHIN'S PROJECT INFORMATION PACKET AND OWNER'S HAZARDOUS MATERIAL DRAWINGS.
3. IF UNEXPECTED HAZARDOUS MATERIAL ARE ENCOUNTERED, STOP WORK AND NOTIFY OWNER OF ANY HAZARDOUS MATERIALS ENCOUNTERED THAT WERE NOT PREVIOUSLY IDENTIFIED; OWNER'S CONSULTANT SHALL SAMPLE MATERIAL(S) AND HAVE MATERIAL(S) ANALYZED BY NVLAP-APPROVED LABORATORY. IF FOUND BY OWNER'S CONSULTANT TO BE A HAZARDOUS MATERIAL, ASBESTOS ABATEMENT CONTRACTOR SHALL CONTAIN AND ABATE, REPAIR, OR ENCAPSULATE AS REQUIRED FOR NEW WORK AS DIRECTED BY OWNER.
4. ALL ABATEMENT, REPAIR OR ENCAPSULATION TO BE PERFORMED BY LICENSED ABATEMENT CONTRACTORS.
5. NEW CONSTRUCTION MAY REQUIRE ABATEMENT, REGARDLESS OF PRIOR DEMOLITION.
6. NEW CONNECTIONS TO EXISTING STRUCTURE MAY REQUIRE ABATEMENT AT CONNECTION LOCATIONS. PRIOR TO WELDING, DRILLING, OR ANY OTHER CONNECTION METHOD, VERIFY PRESENCE OF REGULATED MATERIAL PER OWNER'S HAZARDOUS MATERIAL DRAWINGS AND PINCHIN'S PROJECT INFORMATION PACKET.
7. CONNECTIONS INCLUDE, BUT ARE NOT LIMITED TO, WALL BRACING, DEFLECTION TRACKS, CEILING HANGERS, DUCT HANGERS, EQUIPMENT HANGERS, LIGHTING, PLUMBING SUPPORTS, STRUCTURAL STEEL AND OTHER PENETRATIONS PER OWNER'S HAZARDOUS MATERIAL DRAWINGS.
8. WELDED CONNECTIONS ARE TO BE ABATED TO THE EXTENT WHICH MINIMIZES HEAT-GENERATED HAZARDS PER OWNER'S HAZARDOUS MATERIAL DRAWINGS.
9. DRILLED CONNECTIONS ARE TO BE ABATED TO THE EXTENT WHICH MINIMIZES PARTICLE-GENERATED HAZARDS PER OWNER'S HAZARDOUS MATERIAL DRAWINGS.

GENERAL ASSET PROTECTION NOTES:

1. ALL ITEMS NOTED TO BE REMOVED AND STORED SHALL BE REMOVED BY CONTRACTOR PRIOR TO BEGINNING ANY ABATEMENT WORK.
2. ALL CASEWORK IN ROOMS WITH DEMOLITION WORK TO BE PROTECTED. CONTRACTOR TO COORDINATE CASEWORK PROTECTION TO REMAIN IN ROOMS RECEIVING ASBESTOS ABATEMENT THROUGHOUT PROCESS. HORIZONTAL SURFACES SHALL BE COVERED WITH SHEET PLASTIC OVER CARDBOARD. VERTICAL SURFACES SHALL BE COVERED WITH SHEET PLASTIC.
3. CONTRACTOR TO PROTECT ALL CARPET FLOORING WITH SELF-ADHERING FILM IN ROOMS RECEIVING ASBESTOS ABATEMENT THROUGHOUT CONSTRUCTION PROCESS.
4. CONTRACTOR TO PROTECT ALL RESILIENT FLOORING WITH PLASTIC FLOOR RUNNERS TAPED OVER HARBOARD (MASONITE) IN ROOMS RECEIVING ASBESTOS ABATEMENT THROUGHOUT CONSTRUCTION PROCESS.
5. CONTRACTOR TO COORDINATE THE REMOVAL, STORAGE, & REINSTALLATION OF ALL REMAINING FURNITURE & ITEMS NOT AFFIXED TO BUILDING DURING CONSTRUCTION.
6. ALL BUILT-IN SHELVING IN CLOSET SPACES TO REMAIN. REQUIRES SHEET PLASTIC PROTECTION THROUGH ALL PHASES OF CONSTRUCTION.
7. REMOVAL AND STORAGE OF INTERACTIVE WHITE BOARDS BY OWNER'S SUPPLIER:
8. AT ANY ROOM REQUIRING ACT CEILING REMOVAL: REMOVE, SALVAGE, AND STORE CEILING TILES & LIMITED CROSS TEE'S. CONSOLIDATE ALL UNDAMAGED EXISTING TILES INTO CLASSROOMS AND REINSTALL PANELS AND CROSS TEES. PROVIDE NEW CEILING PANELS IN CORRIDORS AND REINSTALL EXISTING CROSS TEES.
9. CONTRACTOR IS RESPONSIBLE MONETARILY & FOR THE LABOR COORDINATION OF INTERACTIVE WALL-MOUNTED PROJECTORS. REMOVAL OF WALL-MOUNTED INTERACTIVE WHITE BOARD AND PROJECTOR TO BE BY PSD CERTIFIED SMART-BOARD INSTALLER - SHILLERS A/V - SEE ELECTRICAL DRAWINGS. INTERACTIVE-BOARD INSTALLER TO STORE EQUIPMENT FOR DURATION OF CONSTRUCTION.
10. CONTRACTOR TO PROTECT ALL EXISTING DOORS AND WINDOWS WITHIN WORK AREA AND ALONG WORK ACCESS PATH.
11. REMOVAL, RELOCATION, AND REINSTALLATION OF SOLAR ARRAY BY OWNER'S SUPPLIER: STRAIGHT UP SOLAR.

SELECTIVE DEMOLITION NOTE – EXISTING DOORS AND WINDOWS:

REMOVE EXISTING DOOR AND WINDOW ASSEMBLIES WITH CARE AND PRECISION. PERFORM DEMOLITION IN A CONTROLLED MANNER TO PRESERVE ADJACENT CONSTRUCTION. PROTECT ALL SURFACES AROUND THE OPENING. PREVENT DAMAGE TO EXISTING MASONRY AND MAINTAIN THE INTEGRITY OF SURROUNDING MATERIALS. LIMIT DEMOLITION OF ADJACENT METAL STUD FRAMING, GYPSUM BOARD, FINISHES, AND OTHER WALL SURFACING TO A MAXIMUM OF 6 INCHES BEYOND THE PERIMETER OF THE EXISTING OPENING. REPAIR OR REPLACE ONLY THOSE MATERIALS NECESSARY TO FACILITATE INSTALLATION OF THE NEW ASSEMBLY AND RESTORE ADJACENT CONSTRUCTION TO MATCH EXISTING CONDITIONS. PAINTING OF REPAIRED WALL SHALL EXTEND TO NEAREST CORNER. CONTRACTOR RESPONSIBLE FOR REPAIRING ALL WALLS/CEILINGS/FLOORS BEYOND LIMITS ALLOWED. CONTRACTOR TO NOTIFY OWNER/ARCHITECT IMMEDIATELY IF UNFORESEEN CONDITIONS ARE UNCOVERED.

GENERAL DEMOLITION NOTES

1. THE SCOPE OF DEMOLITION WORK IS NOT LIMITED EXCLUSIVELY TO THE WORK INDICATED ON THE DEMOLITION SHEETS. THE CONSTRUCTION DOCUMENTS ARE PROVIDED AS A GENERAL GUIDE FOR DEMOLITION. THE CONTRACTOR IS RESPONSIBLE FOR VERIFYING ADDITIONAL DEMOLITION THAT MAY BE REQUIRED FOR DEMOLITION AND PROPER INSTALLATION OF NEW WORK PRIOR TO BID. REFER TO ALL CONSTRUCTION DOCUMENTS FOR ADDITIONAL DEMOLITION INFORMATION AND COORDINATION.
2. ALL EXISTING PIPING, DUCTS, ETC THAT HAVE BEEN ABANDONED ARE TO BE REMOVED. ABANDONED PIPING BELOW CONCRETE SLABS ON GRADE ARE TO BE CAPPED BELOW FLOOR LEVEL. COORDINATE WITH MEP.
3. REMOVE ALL WALL MOUNTED ACCESSORIES, HANGERS, WIRE MOLD & HARDWARE. SALVAGE ACCESSORIES FOR POSSIBLE REUSE.
4. OWNER TO HAVE SALVAGE RIGHTS ON ALL ITEMS WHETHER NOTED ON THE PLANS OR NOT. GENERAL CONTRACTOR TO DISPOSE OF ALL ITEMS NOT REUSED IN THE PROPOSED WORK.
5. COORDINATE DEMOLITION WORK WITH THE NEW CONSTRUCTION SHOWN IN THE DRAWINGS. DUE CARE IS TO BE TAKEN TO AVOID UNDUE DAMAGE TO ADJACENT AREAS, OCCUPIED AND UNOCCUPIED. ADJACENT SURFACES DAMAGED DUE TO DEMOLITION SHALL BE REPAIRED IN ORDER TO ACHIEVE A SEAMLESS APPEARANCE.
6. WHEREVER DEMOLITION OCCURS, THE REMAINING FLOOR, WALLS, AND CEILINGS ARE TO BE PATCHED TO MATCH THE ADJACENT WITH CONTINUOUS SURFACE MATERIAL, TEXTURE, COLOR & FINISH.
7. AREAS IMMEDIATELY ADJACENT TO THE AREA OF THIS WORK MAY BE OCCUPIED BY THE OWNER DURING THE DEMOLITION AND NEW CONSTRUCTION WORK. CONTRACTOR SHALL PROVIDE PROTECTIONS FOR OWNER'S PERSONNEL AND ALL OTHER USERS OF THE SURROUNDING AREAS. CONTRACTOR SHALL PROVIDE PROTECTION FROM THE SPREAD OF DUST AND DIRT DURING THE ENTIRE DEMOLITION AND NEW CONSTRUCTION PERIOD.
8. IF HAZARDOUS MATERIALS ARE ENCOUNTERED THE ARCHITECT & OWNER ARE TO BE NOTIFIED IMMEDIATELY.
9. CONTRACTOR TO VERIFY EXISTING CONDITION OF ALL ITEMS TO BE DEMOLISHED IN THE FIELD.
10. PATCH/REPAIR ALL AREAS DAMAGED DURING SELECTIVE DEMOLITION.
11. PROVIDE TEMPORARY SHORING AT ALL CEILINGS/WALLS WHERE DEMOLITION MAY COMPROMISE THE STABILITY AND/OR STRUCTURAL INTEGRITY OF THE SYSTEM.
12. SALVAGE EXISTING NON-DEFECTIVE STONE MATERIALS REMOVED DURING DEMOLITION FOR REUSE AT AREAS TO BE INFILLED.
13. CONTRACTOR TO COORDINATE REMOVAL OF EQUIPMENT AND FURNITURE AS REQUIRED IN AREAS OF WORK WITH OWNER PRIOR TO START OF DEMOLITION.
14. WHERE DOOR(S) INDICATED TO BE REMOVED, REMOVE FRAME(S) AND ALL ASSOCIATED HARDWARE, UNLESS NOTED OTHERWISE.
15. WHERE WINDOWS(S) INDICATED TO BE REMOVED, REMOVE ALL ASSOCIATED HARDWARE WITH PORTION OF UNIT TO BE REMOVED, UNLESS NOTED OTHERWISE.
16. CONTRACTOR TO VERIFY WALL CONSTRUCTION OF ALL WALLS RELATED TO WORK.
17. SALVAGE AND RELOCATE DONATED SIGNS, ETC. COORDINATE WITH OWNER.
18. EXISTING BLOCKING UNCOVERED THROUGH DEMOLITION TO BE REPLACED WITH FRT BLOCKING - SEE SPECIFICATIONS.
19. REPLACE ALL EXISTING FIREPROOFING WHERE DISTURBED W/ EQUIVALENT MATERIAL & RATING.
20. RELOCATE CONTROLS, DEVICES, AND OUTLETS NOT DEMO'D TO THE FINISH FACE OF NEW PARTITION.
21. WHERE EXISTING WALLS MUST BE CUT FOR NEW WORK, WALLS ARE TO BE PATCHED AND PAINTED TO MATCH EXISTING CONDITIONS. PAINT ENTIRE WALL/CEILING TO NEAREST CORNER.
22. ANY EXISTING MATERIALS DAMAGED BY WORK SHOULD BE REPAIRED TO MATCH EXISTING.
23. PATCH AND REPAIR WALLS, FLOORS, CEILINGS WHERE DEVICES WERE REMOVED.

bond architects
222 SOUTH CENTRAL AVE.
SUITE# 501
ST. LOUIS, MO 63105
TEL: 314.863.4994
FAX: 314.863.4996
www.bondarchitectsinc.com
Bond Architects, Inc.
Missouri State Certificate of Authority # 2009027409

COLE Design Group
Civil Engineer
Project Number: 26-0052
Certificate of Authority #
401 S. 18th Street, Suite 200
St Louis, MO 63103
314.984.9887 tel

RTM Engineering Consultants
MEP / FP Engineer
Project Number: 26.B00203.1928
Certificate of Authority #2002028690
3701 Lindbergh Blvd.
St Louis, MO 63127
314.725.5889 tel

CASE Engineering
STRUCTURAL Engineer
Project Number: BDA-MO-05-26
Certificate of Authority #001498
796 Merus Ct.
Fenton, MO 63026
636.349.1600 tel

Barretts Elementary School
1780 CARMAN RD., MANCHESTER, MO 63021
Parkway Project #: PN012501B
BUILDING RENOVATION & SITE IMPROVEMENTS

Parkway School District
363 N. Woods Mill Rd.
Chesterfield MO 63017
314.415.6231 tel

Project No: 26016

Revisions

Description	Date

This drawing and the details on it are the sole property of the architect and may be used for this specific project only. It shall not be loaned, copied or reproduced, in whole or in part, or for any other purpose or project without the written consent of the Architect. Copyright © 2023 by Bond Architects, Inc.

STATE OF MISSOURI
MICHELLE R. WELLS
NUMBER A-2021031961
ARCHITECT
11/12/26

The Professional Architects seal affixed to this sheet applies only to the material and items shown on this sheet. All drawings, instruments or other documents not exhibiting this seal shall not be considered prepared by this architect, and this architect expressly disclaims any and all responsibility for such plan, drawings or documents not exhibiting this seal.

DATE: 11/12/2026

BID/ PERMIT SET

GENERAL & DEMOLITION NOTES

A0.5

Save

SCALE: 3" = 1'-0"
SCALE: 1 1/2" = 1'-0"
SCALE: 1" = 1'-0"
SCALE: 3/4" = 1'-0"
SCALE: 1/2" = 1'-0"
SCALE: 1/4" = 1'-0"
SCALE: 1/8" = 1'-0"
SCALE: 1/16" = 1'-0"

SCOPE LEGEND

NO ARCHITECTURAL WORK IN THIS AREA FOR WORK DESCRIBED ON THIS PAGE. WORK MAY BE INCLUDED IN THESE AREAS ON OTHER SHEETS.

SELECTIVE DEMOLITION NOTE – EXISTING DOORS AND WINDOWS:

REMOVE EXISTING DOOR AND WINDOW ASSEMBLIES WITH CARE AND PRECISION. PERFORM DEMOLITION IN A CONTROLLED MANNER TO PRESERVE ADJACENT CONSTRUCTION. PROTECT ALL SURFACES AROUND THE OPENING. PREVENT DAMAGE TO EXISTING MASONRY AND MAINTAIN THE INTEGRITY OF SURROUNDING MATERIALS. LIMIT DEMOLITION OF ADJACENT METAL STUD FRAMING, GYPSUM BOARD, FINISHES, AND OTHER WALL SURFACING TO A MAXIMUM OF 6 INCHES BEYOND THE PERIMETER OF THE EXISTING OPENING. REPAIR OR REPLACE ONLY THOSE MATERIALS NECESSARY TO FACILITATE INSTALLATION OF THE NEW ASSEMBLY AND RESTORE ADJACENT CONSTRUCTION TO MATCH EXISTING CONDITIONS. PAINTING OF REPAIRED WALL SHALL EXTEND TO NEAREST CORNER. CONTRACTOR RESPONSIBLE FOR REPAIRING ALL WALLS/CEILINGS/FLOORS BEYOND LIMITS ALLOWED. CONTRACTOR TO NOTIFY OWNER/ARCHITECT IMMEDIATELY IF UNFORESEEN CONDITIONS ARE UNCOVERED.

OVERALL DEMO PLAN GENERAL NOTE:
THIS ARCHITECTURAL OVERALL DEMOLITION PLAN IS PROVIDED TO SHOW THE GENERAL LAYOUT OF THE BUILDING & WHERE THE SCOPE OF ARCHITECTURAL WORK GENERALLY OCCURS. SEE ENLARGED DEMOLITION PLAN FOR DETAILED PLAN AND SCOPE OF WORK. SEE ALSO CIVIL, STRUCTURAL, ELECTRICAL AND MECHANICAL DRAWINGS FOR THEIR RESPECTIVE SCOPES OF WORK.

SEE ALL NOTES ON GENERAL NOTES & ABBREVIATIONS SHEET A0.3:
- GENERAL NOTES
- ABBREVIATIONS

SEE ALSO GENERAL NOTES AND SYMBOLS ON SHEET A0.4
SEE ALL NOTES ON DEMOLITION GENERAL NOTES SHEET A0.5:
- HAZARDOUS MATERIALS GENERAL NOTES
- REGULATED MATERIAL ABATEMENT GENERAL NOTES
- GENERAL ASSET PROTECTION NOTES
- GENERAL DEMOLITION NOTES

SEE ALSO C, S, E & M DRAWINGS FOR C, S, E & M SCOPE OF WORK.

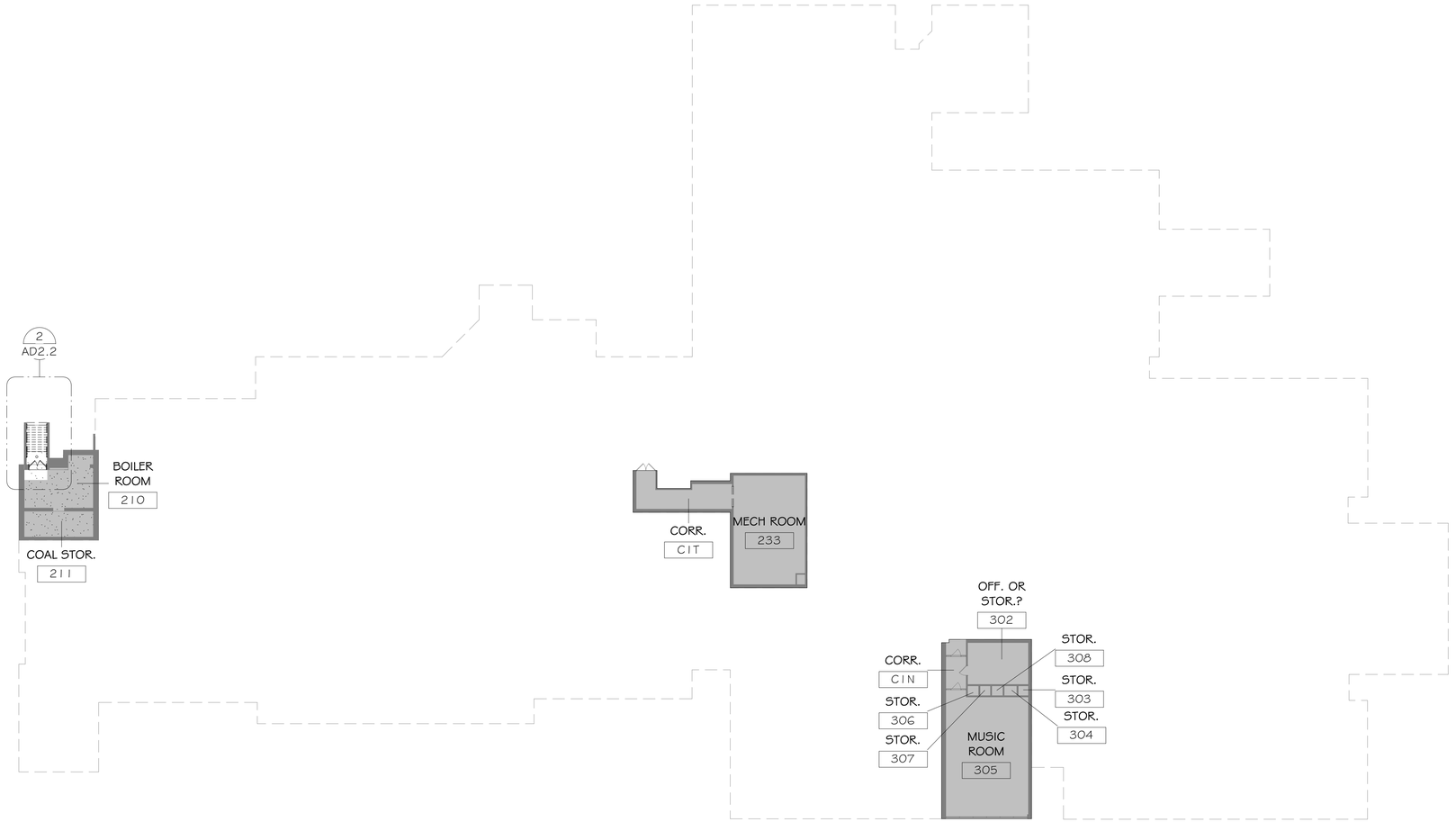

1 AD2.0 N LOWER LEVEL OVERALL DEMO PLAN
1" = 20'-0"

11/5/2026 5:09:19 PM

bond architects
222 SOUTH CENTRAL AVE.
SUITE# 501
ST. LOUIS, MO 63105
TEL: 314.863.4994
FAX: 314.863.4996
www.bondarchitectsinc.com
Bond Architects, Inc.
Missouri State Certificate of Authority # 2009027409

COLE Design Group
Civil Engineer
Project Number: 26-0052
Certificate of Authority #
401 S. 18th Street, Suite 200
St Louis, MO 63103
314.984.9887 tel

RTM Engineering Consultants
MEP / FP Engineer
Project Number: 26.B00203.1928
Certificate of Authority #2002028690
3701 Lindbergh Blvd.
St Louis, MO 63127
314.725.5889 tel

CASE Engineering
STRUCTURAL Engineer
Project Number: BDA-MO-05-26
Certificate of Authority #001498
796 Merus Ct.
Fenton, MO 63026
636.349.1600 tel

Barretts Elementary School
1780 CARMAN RD., MANCHESTER, MO 63021
Parkway Project #: PN012501B
BUILDING RENOVATION & SITE IMPROVEMENTS
Parkway School District
363 N. Woods Mill Rd.
Chesterfield, MO 63017
314.415.8231 tel

Project No: 26016

Revisions

Description	Date

This drawing and the details on it are the sole property of the architect and may be used for this specific project only. It shall not be loaned, copied or reproduced, in whole or in part, or for any other purpose or project without the written consent of the Architect.
Copyright © 2023 by Bond Architects, Inc.

STATE OF MISSOURI
MICHELLE R. WELLS
NUMBER A-2021031961
ARCHITECT
11/12/26

The Professional Architects seal affixed to this sheet applies only to the material and items shown on this sheet. All drawings, instruments or other documents not exhibiting this seal shall not be considered prepared by this architect, and this architect expressly disclaims any and all responsibility for such plan, drawings or documents not exhibiting this seal.

DATE: 11/12/2026

BID/ PERMIT SET

LOWER LEVEL DEMO PLAN

AD2.0

Save

SCOPE LEGEND

NO ARCHITECTURAL WORK IN THIS AREA FOR WORK DESCRIBED ON THIS PAGE. WORK MAY BE INCLUDED IN THESE AREAS ON OTHER SHEETS.

SELECTIVE DEMOLITION NOTE – EXISTING DOORS AND WINDOWS:

REMOVE EXISTING DOOR AND WINDOW ASSEMBLIES WITH CARE AND PRECISION. PERFORM DEMOLITION IN A CONTROLLED MANNER TO PRESERVE ADJACENT CONSTRUCTION. PROTECT ALL SURFACES AROUND THE OPENING. PREVENT DAMAGE TO EXISTING MASONRY AND MAINTAIN THE INTEGRITY OF SURROUNDING MATERIALS. LIMIT DEMOLITION OF ADJACENT METAL STUD FRAMING, GYPSUM BOARD, FINISHES, AND OTHER WALL SURFACING TO A MAXIMUM OF 6 INCHES BEYOND THE PERIMETER OF THE EXISTING OPENING. REPAIR OR REPLACE ONLY THOSE MATERIALS NECESSARY TO FACILITATE INSTALLATION OF THE NEW ASSEMBLY AND RESTORE ADJACENT CONSTRUCTION TO MATCH EXISTING CONDITIONS. PAINTING OF REPAIRED WALL SHALL EXTEND TO NEAREST CORNER. CONTRACTOR RESPONSIBLE FOR REPAIRING ALL WALLS/CEILINGS/FLOORS BEYOND LIMITS ALLOWED. CONTRACTOR TO NOTIFY OWNER/ARCHITECT IMMEDIATELY IF UNFORESEEN CONDITIONS ARE UNCOVERED.

OVERALL DEMO PLAN GENERAL NOTE:
THIS ARCHITECTURAL OVERALL DEMOLITION PLAN IS PROVIDED TO SHOW THE GENERAL LAYOUT OF THE BUILDING & WHERE THE SCOPE OF ARCHITECTURAL WORK GENERALLY OCCURS. SEE ENLARGED DEMOLITION PLAN FOR DETAILED PLAN AND SCOPE OF WORK. SEE ALSO CIVIL, STRUCTURAL, ELECTRICAL AND MECHANICAL DRAWINGS FOR THEIR RESPECTIVE SCOPES OF WORK.

SEE ALL NOTES ON GENERAL NOTES & ABBREVIATIONS SHEET A0.3:
- GENERAL NOTES
- ABBREVIATIONS

SEE ALSO GENERAL NOTES AND SYMBOLS ON SHEET A0.4
SEE ALL NOTES ON DEMOLITION GENERAL NOTES SHEET A0.5:
- HAZARDOUS MATERIALS GENERAL NOTES
- REGULATED MATERIAL ABATEMENT GENERAL NOTES
- GENERAL ASSET PROTECTION NOTES
- GENERAL DEMOLITION NOTES

SEE ALSO C, S, E & M DRAWINGS FOR C, S, E & M SCOPE OF WORK.

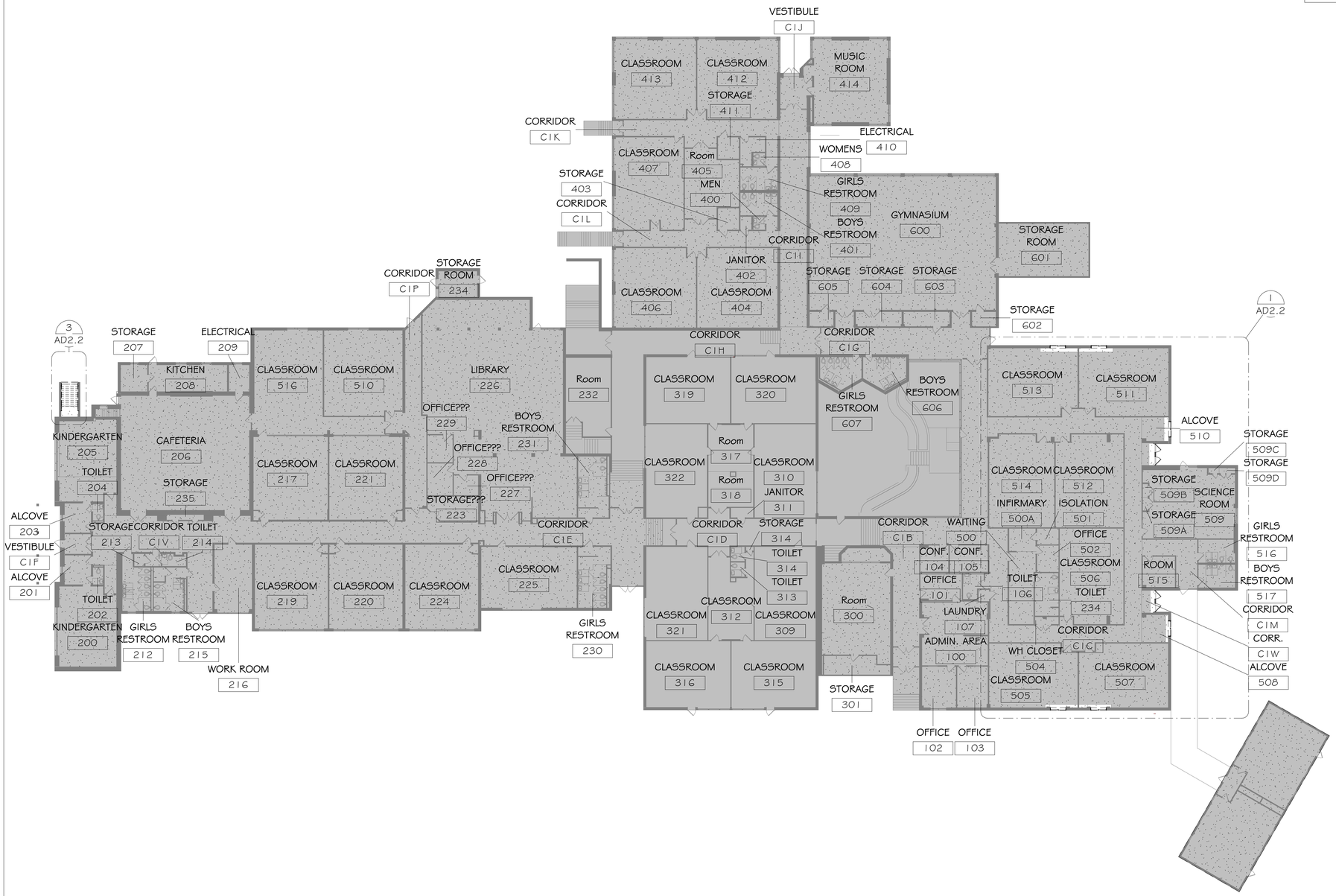

1 LEVEL 1 DEMO PLAN
AD2.1 1" = 20'-0"

11/5/2026 5:09:21 PM

bond architects
222 SOUTH CENTRAL AVE.
SUITE# 501
ST. LOUIS, MO 63105
TEL: 314.863.4994
FAX: 314.863.4996
www.bondarchitectsinc.com
Bond Architects, Inc.
Missouri State Certificate of Authority # 2009027409

COLE Design Group
Civil Engineer
Project Number: 26-0052
Certificate of Authority #
401 S. 18th Street, Suite 200
St Louis, MO 63103
314.984.9887 tel

RTM Engineering Consultants
MEP / FP Engineer
Project Number: 26.B00203.1928
Certificate of Authority #2002028690
3701 Lindbergh Blvd.
St Louis, MO 63127
314.725.5889 tel

CASE Engineering
STRUCTURAL Engineer
Project Number: BDA-MO-05-26
Certificate of Authority #001498
796 Merus Ct.
Fenton, MO 63026
636.349.1600 tel

Barretts Elementary School
1780 CARMAN RD., MANCHESTER, MO 63021
Parkway Project #: PN012501B
BUILDING RENOVATION & SITE IMPROVEMENTS
Parkway School District
363 N. Woods Mill Rd.
Chesterfield, MO 63017
314.415.8231 tel

Project No: 26016

Revisions

Description	Date

This drawing and the details on it are the sole property of the architect and may be used for this specific project only. It shall not be loaned, copied or reproduced, in whole or in part, or for any other purpose or project without the written consent of the Architect. Copyright © 2023 by Bond Architects, Inc.

STATE OF MISSOURI
MICHELLE R. WELLS
NOTARY
A-2021031961
ARCHITECT
11/12/26

The Professional Architects seal affixed to this sheet applies only to the material and items shown on this sheet. All drawings, instruments or other documents not exhibiting this seal shall not be considered prepared by this architect, and this architect expressly disclaims any and all responsibility for such plan, drawings or documents not exhibiting this seal.

DATE: 11/12/2026

BID/ PERMIT SET

LEVEL 1 DEMO PLAN

AD2.1

Save

SCALE: 3" = 1'-0" | SCALE: 1 1/2" = 1'-0" | SCALE: 1" = 1'-0" | SCALE: 3/4" = 1'-0" | SCALE: 1/2" = 1'-0" | SCALE: 1/4" = 1'-0" | SCALE: 1/8" = 1'-0" | SCALE: 1/16" = 1'-0"

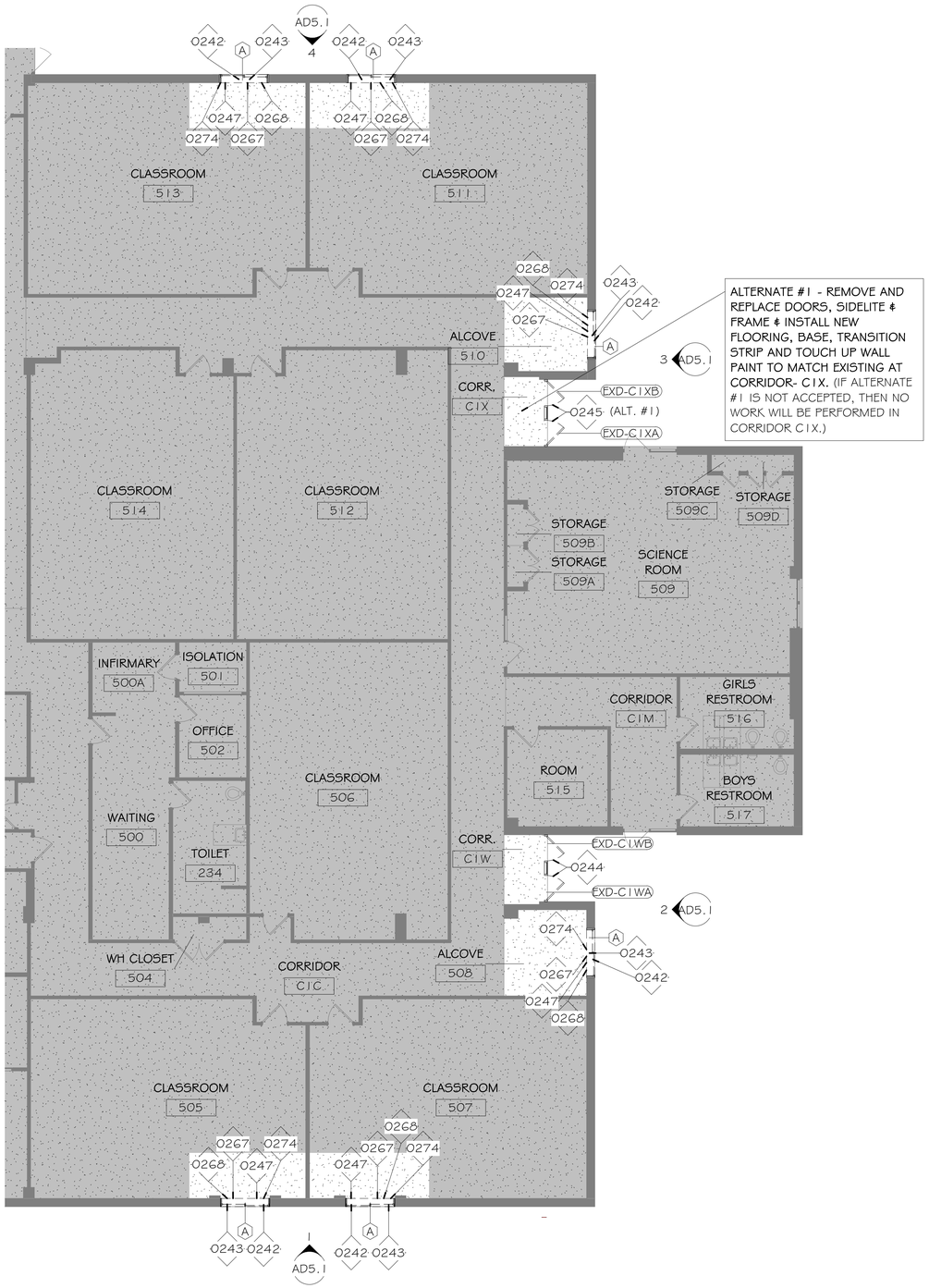

1 / AD2.2 / N — FIRST FLOOR ENLARGED DEMO PLANS
1/8" = 1'-0"

SCOPE LEGEND

NO ARCHITECTURAL WORK IN THIS AREA FOR WORK DESCRIBED ON THIS PAGE. WORK MAY BE INCLUDED IN THESE AREAS ON OTHER SHEETS.

ALTERNATE #1 - REMOVE AND REPLACE DOORS, SIDELITE & FRAME & INSTALL NEW FLOORING, BASE, TRANSITION STRIP AND TOUCH UP WALL PAINT TO MATCH EXISTING AT CORRIDOR- C1X. (IF ALTERNATE #1 IS NOT ACCEPTED, THEN NO WORK WILL BE PERFORMED IN CORRIDOR C1X.)

ALTERNATE #2 - STAIR EST-008 RETAINING WALLS: REMOVE & REPLACE RETAINING WALLS/ FOOTINGS IN THEIR ENTIRETY, (IF DETERMINED DURING DEMOLITION OF EXISTING STAIRS THAT RETAINING WALLS DO NOT EXTEND TO REQUIRED DEPTHS FOR THE NEW LESS STEEP CODE COMPLIANT STAIRS. SEE ALSO STRUCTURAL DRAWINGS.)

ALTERNATE #3 - NO WORK REQUIRED AT STAIR EST-008, HANDRAILS, SURROUNDING RETAINING WALLS & GUARDRAILS

SELECTIVE DEMOLITION NOTE – EXISTING DOORS AND WINDOWS:

REMOVE EXISTING DOOR AND WINDOW ASSEMBLIES WITH CARE AND PRECISION. PERFORM DEMOLITION IN A CONTROLLED MANNER TO PRESERVE ADJACENT CONSTRUCTION. PROTECT ALL SURFACES AROUND THE OPENING. PREVENT DAMAGE TO EXISTING MASONRY AND MAINTAIN THE INTEGRITY OF SURROUNDING MATERIALS. LIMIT DEMOLITION OF ADJACENT METAL STUD FRAMING, GYPSUM BOARD, FINISHES, AND OTHER WALL SURFACING TO A MAXIMUM OF 6 INCHES BEYOND THE PERIMETER OF THE EXISTING OPENING. REPAIR OR REPLACE ONLY THOSE MATERIALS NECESSARY TO FACILITATE INSTALLATION OF THE NEW ASSEMBLY AND RESTORE ADJACENT CONSTRUCTION TO MATCH EXISTING CONDITIONS. PAINTING OF REPAIRED WALL SHALL EXTEND TO NEAREST CORNER. CONTRACTOR RESPONSIBLE FOR REPAIRING ALL WALLS/CEILINGS/FLOORS BEYOND LIMITS ALLOWED. CONTRACTOR TO NOTIFY OWNER/ARCHITECT IMMEDIATELY IF UNFORESEEN CONDITIONS ARE UNCOVERED.

SEE ALL NOTES ON GENERAL NOTES & ABBREVIATIONS SHEET A0.3:
- GENERAL NOTES
- ABBREVIATIONS

SEE ALSO GENERAL NOTES AND SYMBOLS ON SHEET A0.4
SEE ALL NOTES ON DEMOLITION GENERAL NOTES SHEET A0.5:
- HAZARDOUS MATERIALS GENERAL NOTES
- REGULATED MATERIAL ABATEMENT GENERAL NOTES
- GENERAL ASSET PROTECTION NOTES
- GENERAL DEMOLITION NOTES

SEE ALSO C, S, E & M DRAWINGS FOR C, S, E & M SCOPE OF WORK.

Keynote Legend

Key Value	Keynote Text
0218	AFTER ABATEMENT CONTRACTOR REMOVES DOORS, CONTRACTOR TO REMOVE FRAME, & ALL ASSOCIATED HARDWARE. RETURN HARDWARE TO OWNER. PROVIDE TEMPORARY BRACING & SHORING AS REQUIRED AT DEMOLITION TO MAINTAIN & PROTECT SURROUNDING EXISTING STONEWORK, WALL AND OPENING TO REMAIN.
0235	REMOVE END RETAINING WALL (AND PORTION OF SIDE RETAINING WALLS) ONLY AS NEEDED TO EXTEND NEW ADA COMPLIANT STAIRS. SEE CIVIL & STRUCT. DWGS.
0236	REMOVE POURED IN PLACE CONCRETE STAIRS – SEE ALSO CIVIL & STRUCT. DWGS.

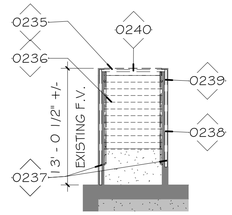

3 / AD2.2 / N — LEVEL 1 DEMO BOILER ROOM STAIRS
1/8" = 1'-0"

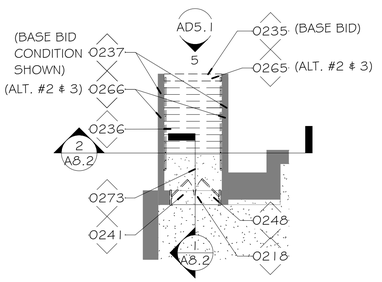

2 / AD2.2 / N — BOILER ROOM ENLARGED DEMO PLAN
1/8" = 1'-0"

Keynote Legend

Key Value	Keynote Text
0237	EXISTING SIDE RETAINING WALLS TO REMAIN TO THE GREATEST EXTENT POSSIBLE. REMOVE PORTIONS OF SIDE WALLS ONLY AS REQUIRED. COORDINATE WITH STRUCT. ENGINEER RE: EXTENT OF RETAINING WALL DEMOLITION. SEE ALSO CIVIL & STRUCT. DWGS.
0238	REMOVE METAL POSTS, HANDRAILS & ALL HARDWARE SIDE MOUNTED INTO CONC. RETAINING WALLS. PATCH WALLS FLUSH WITH EXISTING. SEE STRUCT. DWGS.
0239	REMOVE METAL POSTS, GUARDRAILS MOUNTED ON TOP OF RETAINING WALLS. PREPARE TOP OF RETAINING WALL FOR REPAIR AT SPALLED CONCRETE AREA NEAR POST WHERE OCCURS & FOR MOUNTING OF NEW POSTS TO BASEPLATES ON TOP OF RETAINING WALL.
0240	REMOVE EXISTING GATES TO BE REPLACED WITH NEW.
0241	AFTER ABATEMENT CONTRACTOR REMOVES LBP, CONTRACTOR TO CAREFULLY CLEAN OUT THE EXISTING PACK RUST AT LINTEL AS MUCH AS POSSIBLE, SEAL THE JOINT BETWEEN MASONRY AND STEEL, AND PAINT THE REMAINING EXPOSED STEEL WITH A HIGH-PERFORMANCE EXTERIOR RATED PAINT. PROVIDE TEMPORARY BRACING AND SHORING AS REQUIRED TO MAINTAIN & PROTECT SURROUNDING EXISTING STONEWORK, WALL AND OPENING TO REMAIN. SEE ALSO STRUCT. DWGS.
0242	ABATEMENT CONTRACTOR TO REMOVE SLIDING ALUM. WINDOW UNITS, PANELS ABOVE & BELOW WINDOW UNITS AT LOCATIONS INDICATED. SALVAGE & RETURN TO OWNER. OWNER TO HAVE FIRST RIGHT OF REFUSAL.
0243	AFTER REMOVAL OF SLIDING WINDOW UNITS, PANELS ABOVE & BELOW WINDOW UNITS, BY ABATEMENT CONTRACTOR, CONTRACTOR TO REMOVE ALUM. STOREFRONT SYSTEM, ALUM. CLOSURES, ALL CAULKING AND WOOD BLOCKING. PREPARE OPENING FOR INSTALLATION OF NEW ALUMINUM AWNING UNITS, ALUMINUM STOREFRONT FRAME AND FRP PANELS ABOVE AND BELOW EXISTING WINDOWS.
0244	AFTER ABATEMENT CONTRACTOR REMOVES DOORS, CONTRACTOR TO REMOVE SIDELIGHT BETWEEN & STEEL FRAMES IN ENTIRETY AT ENTRY EXD-C1W – EXCEPT CUT C CHANNEL AT SIDELITE SILL TO BE FLUSH WITH CONCRETE FLOOR. FIELD VERIFY EXISTING OPENING AND ALL CONDITIONS PRIOR TO REMOVING EXISTING & ORDERING NEW UNITS. REMOVE CAULK AND PREPARE DOOR OPENING FOR NEW STOREFRONT INSTALLATION.
0245	ADD ALTERNATE #1 – AFTER ABATEMENT CONTRACTOR REMOVES DOORS, CONTRACTOR TO REMOVE SIDELIGHT BETWEEN & STEEL FRAMES IN THEIR ENTIRETY AT ENTRY EXD-C1X – EXCEPT CUT C CHANNEL AT SIDELITE SILL TO BE FLUSH WITH CONCRETE FLOOR. FIELD VERIFY EXISTING OPENING AND CONDITIONS PRIOR TO REMOVING EXISTING AND ORDERING NEW UNITS. REMOVE CAULK AND PREPARE DOOR OPENING FOR NEW STOREFRONT INSTALLATION.
0247	PROTECT ALL SURROUNDING WALL, FLOOR, SILL, AND CEILING FINISHES TO REMAIN. REPAIR ANY DAMAGE CAUSED DURING DEMOLITION OR CONSTRUCTION TO SUBSTRATES AND FINISHES TO MATCH EXISTING SURROUNDING FINISHES IN GOOD CONDITION.
0248	REMOVE THRESHOLD AND PORTION OF CONCRETE SILL AT DOOR WHERE BROKEN FOR REPLACEMENT WITH NEW.
0265	ALTERNATE #2: REMOVE END RETAINING WALL AT STAIRS EST-008 IN IT'S ENTIRETY TO EXTEND STAIRS. COORDINATE WITH STRUCTURAL ENGINEER RE: EXTENT OF RETAINING WALL DEMOLITION. SEE ALSO CIVIL & STRUCT. DWGS. ALTERNATE: #3 - NO WORK REQUIRED AT STAIR EST-008, HANDRAILS, SURROUNDING RETAINING WALLS & GUARDRAILS
0266	ALTERNATE #2: REMOVE SIDE RETAINING WALLS & FOOTINGS AT STAIR EST-008 IN THEIR ENTIRETY. COORDINATE WITH STRUCTURAL ENGINEER RE: EXTENT OF RETAINING WALL DEMOLITION. SEE ALSO CIVIL & STRUCT. DWGS. ALTERNATE: #3 - NO WORK REQUIRED AT STAIR EST-008, HANDRAILS, SURROUNDING RETAINING WALLS & GUARDRAILS
0267	REMOVE PLASTIC LAMINATE SILL AND PREPARE OPENING FOR NEW PLAM SILL TO MATCH EXISTING
0268	REMOVE INTERIOR BLINDS PRIOR TO REMOVING WINDOWS. SALVAGE AND STORE FOR REUSE AT SAME LOCATION. IF DAMAGED DURING DEMOLITION OR CONSTRUCTION, REPLACE TO MATCH EXISTING
0273	EXISTING CONCRETE @ BO. STAIRS TO BE REMOVED & REPLACED CAREFULLY TO PROTECT EXISTING DRAIN & PLUMBING TO REMAIN.
0274	REMOVE GYPSUM BOARD BELOW WINDOWS FOR REPLACEMENT OF DAMAGED DRYWALL. IF UNEXPECTED MOLD OR HAZARDOUS MATERIALS ARE ENCOUNTERED, STOP WORK IMMEDIATELY & NOTIFY OWNER.

bond architects
222 SOUTH CENTRAL AVE.
SUITE# 501
ST. LOUIS, MO 63105
TEL: 314.863.4994
FAX: 314.863.4996
www.bondarchitectsinc.com
Bond Architects, Inc.
Missouri State Certificate of Authority # 2009027409

COLE Design Group
Civil Engineer
Project Number: 26-0052
Certificate of Authority #
401 S. 18th Street, Suite 200
St Louis, MO 63103
314.984.9887 tel

RTM Engineering Consultants
MEP / FP Engineer
Project Number: 26.B00203.1928
Certificate of Authority #2002028690
3701 Lindbergh Blvd.
St Louis, MO 63127
314.725.5889 tel

CASE Engineering
STRUCTURAL Engineer
Project Number: BDA-MO-05-26
Certificate of Authority #001498
796 Merus Ct.
Fenton, MO 63026
636.349.1600 tel

Barretts Elementary School
1780 CARMAN RD., MANCHESTER, MO 63021
Parkway Project #: PN012501B
BUILDING RENOVATION & SITE IMPROVEMENTS
Parkway School District
363 N. Woods Mill Rd.
Chesterfield, MO 63017
314.415.8231 tel

Project No: 26016

Revisions

Description	Date

This drawing and the details on it are the sole property of the architect and may be used for this specific project only. It shall not be loaned, copied or reproduced, in whole or in part, or for any other purpose or project without the written consent of the Architect. Copyright © 2023 by Bond Architects, Inc.

STATE OF MISSOURI
MICHELLE R. WELLS
NUMBER A-2021031961
ARCHITECT
11/12/26

The Professional Architects seal affixed to this sheet applies only to the material and items shown on this sheet. All drawings, instruments or other documents not exhibiting this seal shall not be considered prepared by this architect, and this architect expressly disclaims any and all responsibility for such plan, drawings or documents not exhibiting this seal.

DATE: 11/12/2026

BID/ PERMIT SET

ENLARGED DEMO PLANS

AD2.2

11/5/2026 5:09:21 PM

Save

SCALE: 3" = 1'-0"

SCALE: 1 1/2" = 1'-0"

SCALE: 1" = 1'-0"

SCALE: 3/4" = 1'-0"

SCALE: 1/2" = 1'-0"

SCALE: 1/4" = 1'-0"

SCALE: 1/8" = 1'-0"

SCALE: 1/16" = 1'-0"

11/5/2026 5:09:22 PM

SELECTIVE DEMOLITION NOTE – EXISTING DOORS AND WINDOWS:

REMOVE EXISTING DOOR AND WINDOW ASSEMBLIES WITH CARE AND PRECISION. PERFORM DEMOLITION IN A CONTROLLED MANNER TO PRESERVE ADJACENT CONSTRUCTION. PROTECT ALL SURFACES AROUND THE OPENING. PREVENT DAMAGE TO EXISTING MASONRY AND MAINTAIN THE INTEGRITY OF SURROUNDING MATERIALS. LIMIT DEMOLITION OF ADJACENT METAL STUD FRAMING, GYPSUM BOARD, FINISHES, AND OTHER WALL SURFACING TO A MAXIMUM OF 6 INCHES BEYOND THE PERIMETER OF THE EXISTING OPENING. REPAIR OR REPLACE ONLY THOSE MATERIALS NECESSARY TO FACILITATE INSTALLATION OF THE NEW ASSEMBLY AND RESTORE ADJACENT CONSTRUCTION TO MATCH EXISTING CONDITIONS. PAINTING OF REPAIRED WALL SHALL EXTEND TO NEAREST CORNER. CONTRACTOR RESPONSIBLE FOR REPAIRING ALL WALLS/CEILINGS/FLOORS BEYOND LIMITS ALLOWED. CONTRACTOR TO NOTIFY OWNER/ARCHITECT IMMEDIATELY IF UNFORESEEN CONDITIONS ARE UNCOVERED.

Keynote Legend	
Key Value	Keynote Text
0212	EXISTING DRAIN AND CONCRETE SLAB AT BOTTOM OF STAIRWELL TO REMAIN.
0218	AFTER ABATEMENT CONTRACTOR REMOVES DOORS, CONTRACTOR TO REMOVE FRAME, & ALL ASSOCIATED HARDWARE. RETURN HARDWARE TO OWNER. PROVIDE TEMPORARY BRACING & SHORING AS REQUIRED AT DEMOLITION TO MAINTAIN & PROTECT SURROUNDING EXISTING STONEWORK, WALL AND OPENING TO REMAIN.
0237	EXISTING SIDE RETAINING WALLS TO REMAIN TO THE GREATEST EXTENT POSSIBLE. REMOVE PORTIONS OF SIDE WALLS ONLY AS REQUIRED. COORDINATE WITH STRUCT. ENGINEER RE: EXTENT OF RETAINING WALL DEMOLITION. SEE ALSO CIVIL & STRUCT. DWGS.
0238	REMOVE METAL POSTS, HANDRAILS & ALL HARDWARE SIDE MOUNTED INTO CONC. RETAINING WALLS. PATCH WALLS FLUSH WITH EXISTING. SEE STRUCT. DWGS.
0239	REMOVE METAL POSTS, GUARDRAILS MOUNTED ON TOP OF RETAINING WALLS. PREPARE TOP OF RETAINING WALL FOR REPAIR AT SPALLED CONCRETE AREA NEAR POST WHERE OCCURS & FOR MOUNTING OF NEW POSTS TO BASEPLATES ON TOP OF RETAINING WALL.
0241	AFTER ABATEMENT CONTRACTOR REMOVES LBP, CONTRACTOR TO CAREFULLY CLEAN OUT THE EXISTING PACK RUST AT LINTEL AS MUCH AS POSSIBLE, SEAL THE JOINT BETWEEN MASONRY AND STEEL, AND PAINT THE REMAINING EXPOSED STEEL WITH A HIGH-PERFORMANCE EXTERIOR RATED PAINT. PROVIDE TEMPORARY BRACING AND SHORING AS REQUIRED TO MAINTAIN & PROTECT SURROUNDING EXISTING STONEWORK, WALL AND OPENING TO REMAIN. SEE ALSO STRUCT. DWGS.
0242	ABATEMENT CONTRACTOR TO REMOVE SLIDING ALUM. WINDOW UNITS, PANELS ABOVE & BELOW WINDOW UNITS AT LOCATIONS INDICATED. SALVAGE & RETURN TO OWNER. OWNER TO HAVE FIRST RIGHT OF REFUSAL.
0243	AFTER REMOVAL OF SLIDING WINDOW UNITS, PANELS ABOVE & BELOW WINDOW UNITS, BY ABATEMENT CONTRACTOR, CONTRACTOR TO REMOVE ALUM. STOREFRONT SYSTEM, ALUM. CLOSURES, ALL CAULKING AND WOOD BLOCKING. PREPARE OPENING FOR INSTALLATION OF NEW ALUMINUM AWNING UNITS, ALUMINUM STOREFRONT FRAME AND FRP PANELS ABOVE AND BELOW EXISTING WINDOWS.
0244	AFTER ABATEMENT CONTRACTOR REMOVES DOORS, CONTRACTOR TO REMOVE SIDELIGHT BETWEEN & STEEL FRAMES IN ENTIRETY AT ENTRY EXD-C1W – EXCEPT CUT C CHANNEL AT SIDELITE SILL TO BE FLUSH WITH CONCRETE FLOOR. FIELD VERIFY EXISTING OPENING AND ALL CONDITIONS PRIOR TO REMOVING EXISTING & ORDERING NEW UNITS. REMOVE CAULK AND PREPARE DOOR OPENING FOR NEW STOREFRONT INSTALLATION.
0245	ADD ALTERNATE #1 – AFTER ABATEMENT CONTRACTOR REMOVES DOORS, CONTRACTOR TO REMOVE SIDELIGHT BETWEEN & STEEL FRAMES IN THEIR ENTIRETY AT ENTRY EXD-C1X – EXCEPT CUT C CHANNEL AT SIDELITE SILL TO BE FLUSH WITH CONCRETE FLOOR. FIELD VERIFY EXISTING OPENING AND CONDITIONS PRIOR TO REMOVING EXISTING AND ORDERING NEW UNITS. REMOVE CAULK AND PREPARE DOOR OPENING FOR NEW STOREFRONT INSTALLATION.
0248	REMOVE THRESHOLD AND PORTION OF CONCRETE SILL AT DOOR WHERE BROKEN FOR REPLACEMENT WITH NEW.
0265	ALTERNATE #2: REMOVE END RETAINING WALL AT STAIRS EST-008 IN IT'S ENTIRETY TO EXTEND STAIRS. COORDINATE WITH STRUCTURAL ENGINEER RE: EXTENT OF RETAINING WALL DEMOLITION. SEE ALSO CIVIL & STRUCT. DWGS. ALTERNATE: #3 - NO WORK REQUIRED AT STAIR EST-008, HANDRAILS, SURROUNDING RETAINING WALLS & GUARDRAILS

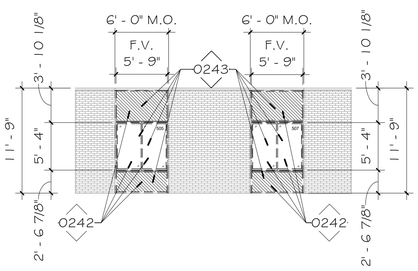

1 DEMO EXT. ELEVATION AT WINDOW 505 & 507
AD5.1 1/8" = 1'-0" REF: 1/AD2.2

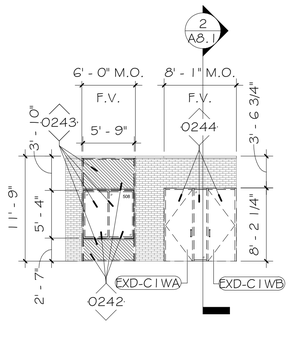

2 DEMO EXT. ELEVATION AT DOOR EXD-C1WB & C1WA & WINDOW 508
AD5.1 1/8" = 1'-0" REF: 1/AD2.2

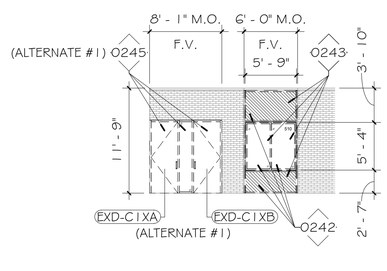

3 DEMO EXT. ELEVATION AT EXD-C1XB & C1XA &WINDOW 510
AD5.1 1/8" = 1'-0" REF: 1/AD2.2

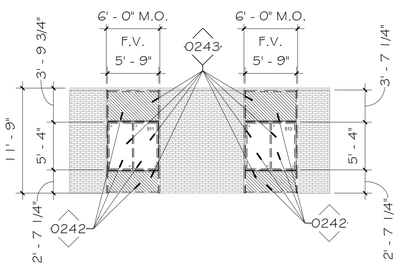

4 DEMO EXT. ELEVATION AT WINDOW 511 & 513
AD5.1 1/8" = 1'-0" REF: 1/AD2.2

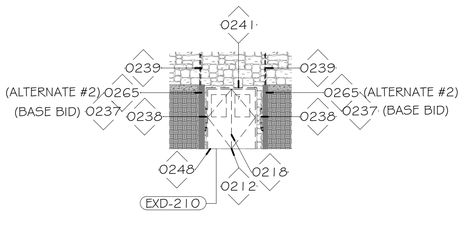

5 DEMO EXT. ELEVATION AT DOOR EXD-210
AD5.1 1/8" = 1'-0" REF: 2/AD2.2

bond architects
222 SOUTH CENTRAL AVE.
SUITE# 501
ST. LOUIS, MO 63105
TEL: 314.863.4994
FAX: 314.863.4996
www.bondarchitectsinc.com
Bond Architects, Inc.
Missouri State Certificate of Authority # 2009027409

COLE Design Group
Civil Engineer
Project Number: 26-0052
Certificate of Authority #
401 S. 18th Street, Suite 200
St Louis, MO 63103
314.984.9887 tel

RTM Engineering Consultants
MEP / FP Engineer
Project Number: 26.B00203.1928
Certificate of Authority #2002028690
3701 Lindbergh Blvd.
St Louis, MO 63127
314.725.5889 tel

CASE Engineering
STRUCTURAL Engineer
Project Number: BDA-MO-05-26
Certificate of Authority #001498
796 Merus Ct.
Fenton, MO 63026
636.349.1600 tel

Barretts Elementary School
1780 CARMAN RD., MANCHESTER, MO 63021
Parkway Project #: PN012501B
BUILDING RENOVATION & SITE IMPROVEMENTS

Parkway School District
363 N. Woods Mill Rd.
Chesterfield, MO 63017
314.415.6231 tel

Project No: 26016

Revisions

Description	Date

This drawing and the details on it are the sole property of the architect and may be used for this specific project only. It shall not be loaned, copied or reproduced, in whole or in part, or for any other purpose or project without the written consent of the Architect. Copyright © 2023 by Bond Architects, Inc.

STATE OF MISSOURI
MICHELLE R. WELLS
NUMBER A-2021031961
ARCHITECT
11/12/26

The Professional Architects seal affixed to this sheet applies only to the material and items shown on this sheet. All drawings, instruments or other documents not exhibiting this seal shall not be considered prepared by this architect, and this architect expressly disclaims any and all responsibility for such plan, drawings or documents not exhibiting this seal.

DATE: 11/12/2026

BID/ PERMIT SET

DEMO EXTERIOR ELEVATIONS

AD5.1

Save

SCALE: 3" = 1'-0"
SCALE: 1 1/2" = 1'-0"
SCALE: 1" = 1'-0"
SCALE: 3/4" = 1'-0"
SCALE: 1/2" = 1'-0"
SCALE: 1/4" = 1'-0"
SCALE: 1/8" = 1'-0"
SCALE: 1/16" = 1'-0"

ARCHITECTURAL SITE PLAN GENERAL NOTE:
THIS ARCHITECTURAL SITE PLAN IS PROVIDED TO SHOW THE GENERAL RELATIONSHIP OF BUILDING TO THE SITE. SEE CIVIL DRAWINGS FOR DETAILED SITE PLANS AND CIVIL SCOPE OF WORK.

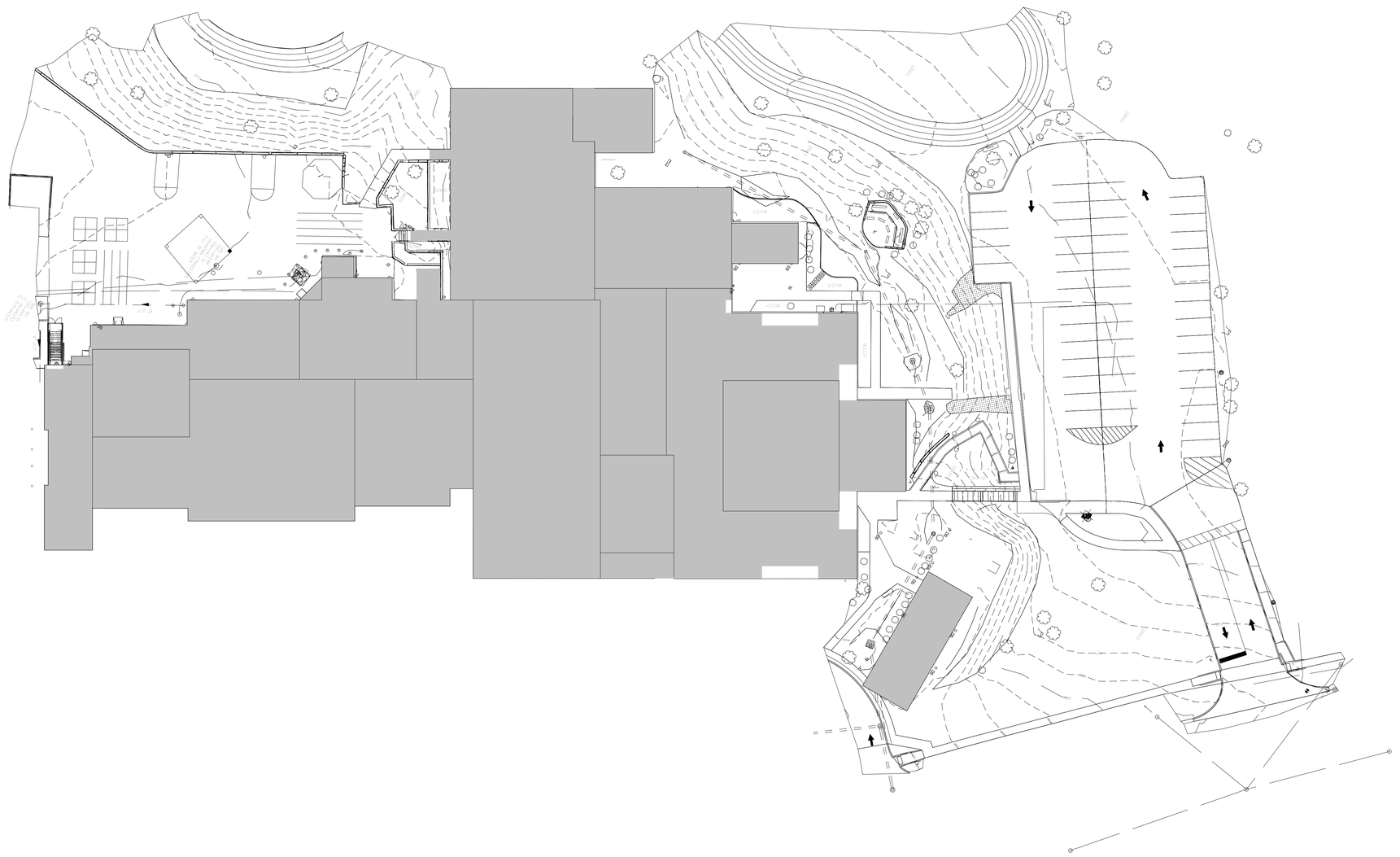

SITE PLAN
1" = 30'-0"

bond architects
222 SOUTH CENTRAL AVE.
SUITE# 501
ST. LOUIS, MO 63105
TEL: 314.863.4994
FAX: 314.863.4996
www.bondarchitectsinc.com
Bond Architects, Inc.
Missouri State Certificate of Authority # 2009027409

COLE Design Group
Civil Engineer
Project Number: 26-0052
Certificate of Authority #
401 S. 18th Street, Suite 200
St Louis, MO 63103
314.984.9887 tel

RTM Engineering Consultants
MEP / FP Engineer
Project Number: 26.B00203.1928
Certificate of Authority #2002028690
3701 Lindbergh Blvd.
St Louis, MO 63127
314.725.5889 tel

CASE Engineering
STRUCTURAL Engineer
Project Number: BDA-MO-05-26
Certificate of Authority #001498
796 Merus Ct.
Fenton, MO 63026
636.349.1600 tel

Barretts Elementary School

1780 CARMAN RD., MANCHESTER, MO 63021
Parkway Project #: PN012501B
BUILDING RENOVATION & SITE IMPROVEMENTS

Parkway School District
363 N. Woods Mill Rd.
Chesterfield, MO 63017
314.415.8231 tel

Project No: 26016

Revisions

Description	Date

This drawing and the details on it are the sole property of the architect and may be used for this specific project only. It shall not be loaned, copied or reproduced, in whole or in part, or for any other purpose or project without the written consent of the Architect. Copyright © 2023 by Bond Architects, Inc.

STATE OF MISSOURI
MICHELLE R. WELLS
NUMBER A-2021031961
ARCHITECT
11/12/26

The Professional Architects seal affixed to this sheet applies only to the material and items shown on this sheet. All drawings, instruments or other documents not exhibiting this seal shall not be considered prepared by this architect, and this architect expressly disclaims any and all responsibility for such plan, drawings or documents not exhibiting this seal.

DATE: 11/12/2026

BID/ PERMIT SET

SITE PLAN

A1.0

11/5/2026 5:09:22 PM

Save

SCALE: 3" = 1'-0"
SCALE: 1 1/2" = 1'-0"
SCALE: 1" = 1'-0"
SCALE: 3/4" = 1'-0"
SCALE: 1/2" = 1'-0"
SCALE: 1/4" = 1'-0"
SCALE: 1/8" = 1'-0"
SCALE: 1/16" = 1'-0"

11/5/2026 5:09:23 PM

SCOPE LEGEND

NO ARCHITECTURAL WORK IN THIS AREA FOR WORK DESCRIBED ON THIS PAGE. WORK MAY BE INCLUDED IN THESE AREAS ON OTHER SHEETS.

OVERALL FLOOR PLAN GENERAL NOTE:
THIS ARCHITECTURAL OVERALL FLOOR PLAN IS PROVIDED TO SHOW THE GENERAL LAYOUT OF THE BUILDING & WHERE THE SCOPE OF ARCHITECTURAL WORK GENERALLY OCCURS. SEE ENLARGED PLANS FOR DETAILED PLANS AND SCOPE OF WORK. SEE ALSO CIVIL, STRUCTURAL, ELECTRICAL AND MECHANICAL DRAWINGS FOR THEIR RESPECTIVE SCOPES OF WORK.

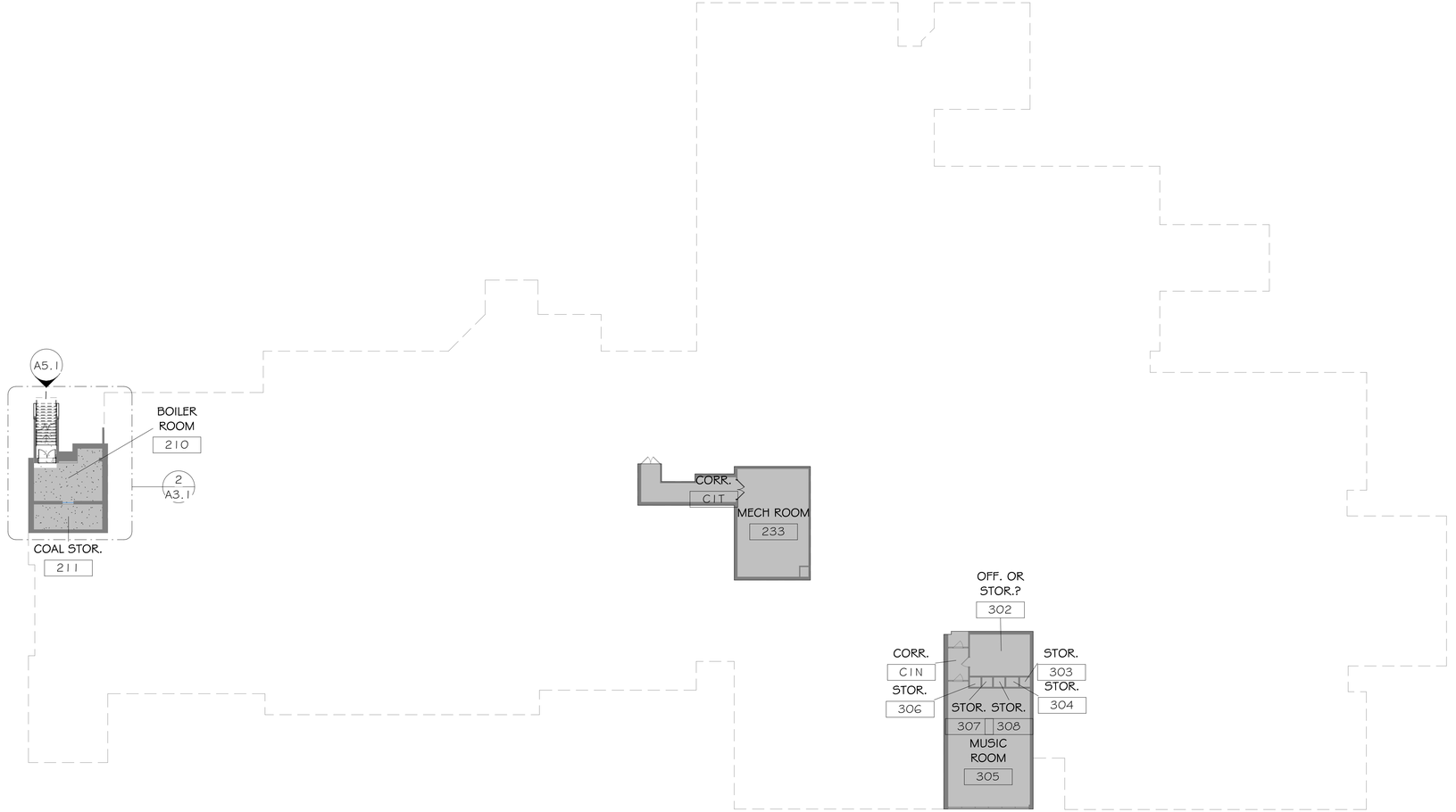

1 A2.0 N LOWER LEVEL OVERALL PLAN
1" = 20'-0"

bond architects
222 SOUTH CENTRAL AVE.
SUITE# 501
ST. LOUIS, MO 63105
TEL: 314.863.4994
FAX: 314.863.4996
www.bondarchitectsinc.com
Bond Architects, Inc.
Missouri State Certificate of Authority # 2009027409

COLE Design Group
Civil Engineer
Project Number: 26-0052
Certificate of Authority #
401 S. 18th Street, Suite 200
St Louis, MO 63103
314.984.9887 tel

RTM Engineering Consultants
MEP / FP Engineer
Project Number: 26.B00203.1928
Certificate of Authority #2002028690
3701 Lindbergh Blvd.
St Louis, MO 63127
314.725.5889 tel

CASE Engineering
STRUCTURAL Engineer
Project Number: BDA-MO-05-26
Certificate of Authority #001498
796 Merus Ct.
Fenton, MO 63026
636.349.1600 tel

Barretts Elementary School
1780 CARMAN RD., MANCHESTER, MO 63021
Parkway Project #: PN012501B
BUILDING RENOVATION & SITE IMPROVEMENTS
Parkway School District
363 N. Woods Mill Rd.
Chesterfield, MO 63017
314.415.8231 tel

Project No: 26016

Revisions

Description	Date

This drawing and the details on it are the sole property of the architect and may be used for this specific project only. It shall not be loaned, copied or reproduced, in whole or in part, or for any other purpose or project without the written consent of the Architect.
Copyright © 2023 by Bond Architects, Inc.

STATE OF MISSOURI
MICHELLE R. WELLS
NUMBER A-2021031961
ARCHITECT
11/12/26

The Professional Architects seal affixed to this sheet applies only to the material and items shown on this sheet. All drawings, instruments or other documents not exhibiting this seal shall not be considered prepared by this architect, and this architect expressly disclaims any and all responsibility for such plan, drawings or documents not exhibiting this seal.

DATE: 11/12/2026

BID/ PERMIT SET

LOWER LEVEL PLAN

A2.0

Save

SCOPE LEGEND

NO ARCHITECTURAL WORK IN THIS AREA FOR WORK DESCRIBED ON THIS PAGE. WORK MAY BE INCLUDED IN THESE AREAS ON OTHER SHEETS.

OVERALL FLOOR PLAN GENERAL NOTE:
THIS ARCHITECTURAL OVERALL FLOOR PLAN IS PROVIDED TO SHOW THE GENERAL LAYOUT OF THE BUILDING & WHERE THE SCOPE OF ARCHITECTURAL WORK GENERALLY OCCURS. SEE ENLARGED PLANS FOR DETAILED PLANS AND SCOPE OF WORK. SEE ALSO CIVIL, STRUCTURAL, ELECTRICAL AND MECHANICAL DRAWINGS FOR THEIR RESPECTIVE SCOPES OF WORK.

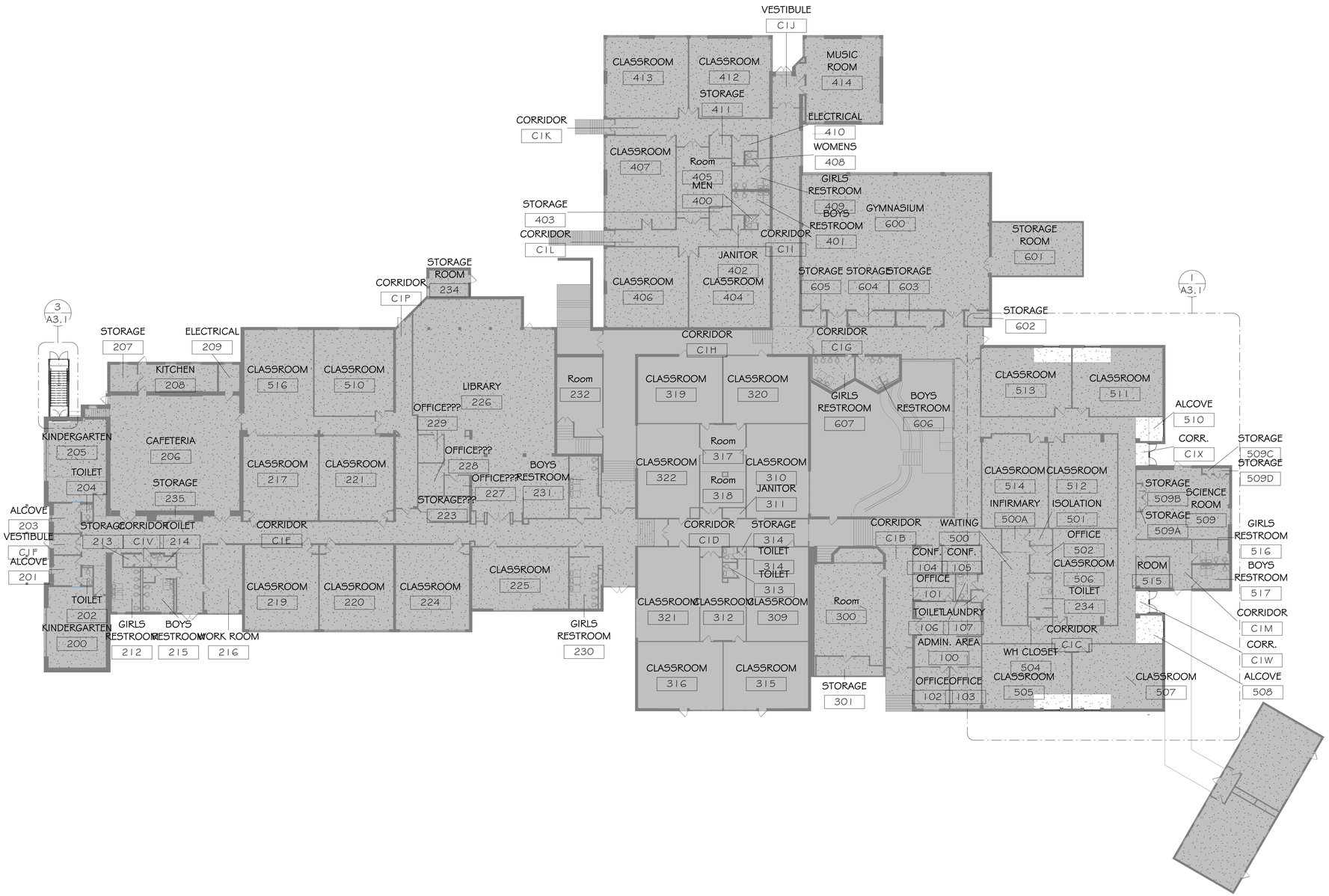

LEVEL 1 FLOOR PLAN
1" = 20'-0"

11/5/2026 5:09:24 PM

bond architects
222 SOUTH CENTRAL AVE.
SUITE# 501
ST. LOUIS, MO 63105
TEL: 314.863.4994
FAX: 314.863.4996
www.bondarchitectsinc.com
Bond Architects, Inc.
Missouri State Certificate of Authority # 2009027409

COLE Design Group
Civil Engineer
Project Number: 26-0052
Certificate of Authority #
401 S. 18th Street, Suite 200
St Louis, MO 63103
314.984.9887 tel

RTM Engineering Consultants
MEP / FP Engineer
Project Number: 26.B00203.1928
Certificate of Authority #2002028690
3701 Lindbergh Blvd.
St Louis, MO 63127
314.725.5889 tel

CASE Engineering
STRUCTURAL Engineer
Project Number: BDA-MO-05-26
Certificate of Authority #001498
796 Merus Ct.
Fenton, MO 63026
636.349.1600 tel

Barretts Elementary School

1780 CARMAN RD., MANCHESTER, MO 63021
Parkway Project #: PN012501B
BUILDING RENOVATION & SITE IMPROVEMENTS
Parkway School District
363 N. Woods Mill Rd.
Chesterfield, MO 63017
314.415.8231 tel

Project No: 26016

Revisions

Description	Date

This drawing and the details on it are the sole property of the architect and may be used for this specific project only. It shall not be loaned, copied or reproduced, in whole or in part, or for any other purpose or project without the written consent of the Architect. Copyright © 2023 by Bond Architects, Inc.

STATE OF MISSOURI
MICHELLE R. WELLS
NUMBER A-2021031961
ARCHITECT
11/12/26

The Professional Architects seal affixed to this sheet applies only to the material and items shown on this sheet. All drawings, instruments or other documents not exhibiting this seal shall not be considered prepared by this architect, and this architect expressly disclaims any and all responsibility for such plan, drawings or documents not exhibiting this seal.

DATE: 11/12/2026

BID/ PERMIT SET

LEVEL 1 FLOOR PLAN

A2.1

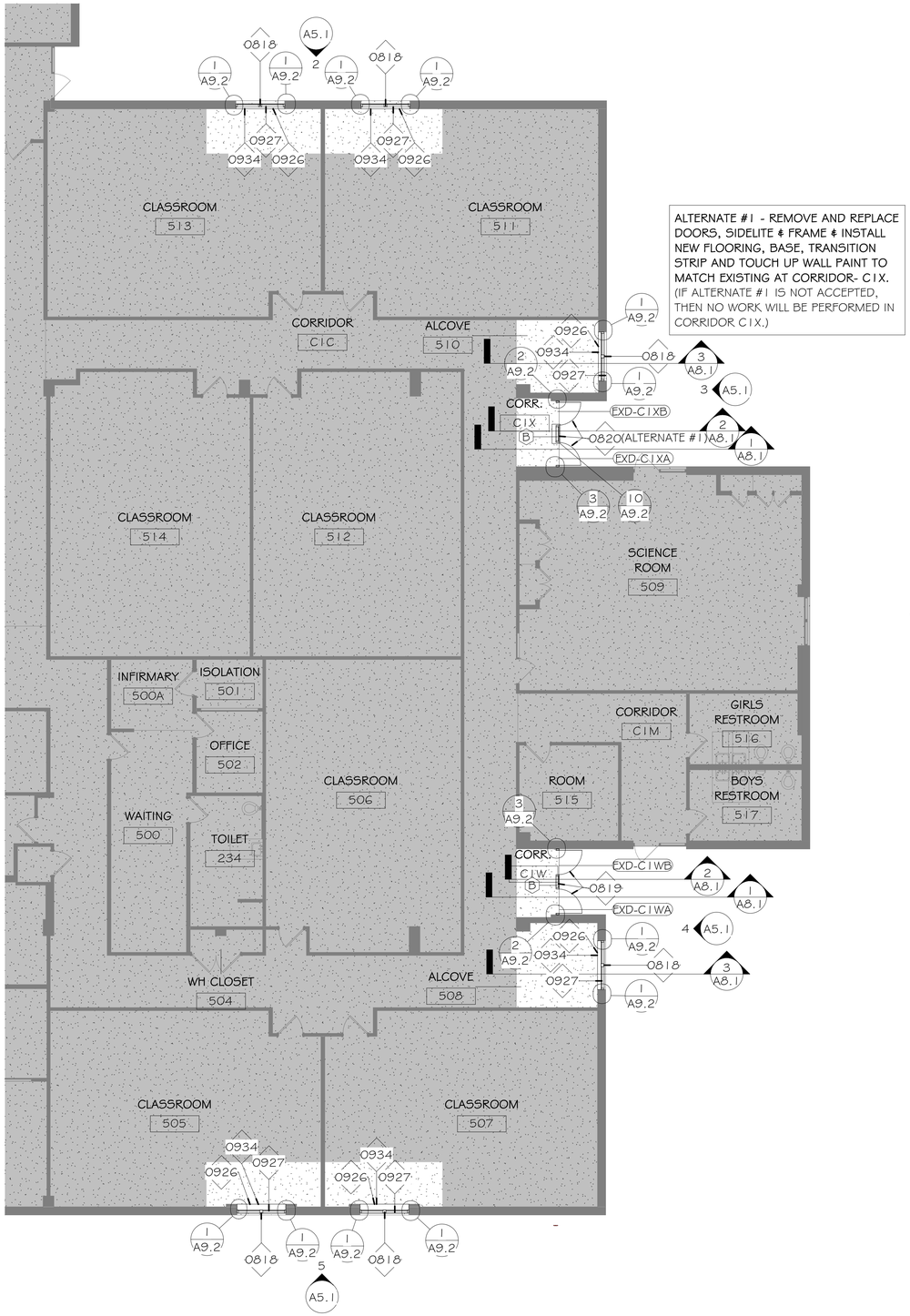

1 A3.1 N LEVEL 1 ENLARGED PLAN
1/8" = 1'-0"

ALTERNATE #1 - REMOVE AND REPLACE DOORS, SIDELITE & FRAME & INSTALL NEW FLOORING, BASE, TRANSITION STRIP AND TOUCH UP WALL PAINT TO MATCH EXISTING AT CORRIDOR- C1X. (IF ALTERNATE #1 IS NOT ACCEPTED, THEN NO WORK WILL BE PERFORMED IN CORRIDOR C1X.)

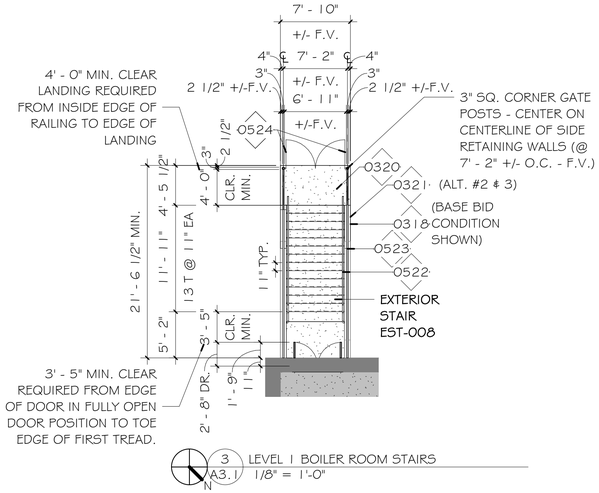

3 A3.1 N LEVEL 1 BOILER ROOM STAIRS
1/8" = 1'-0"

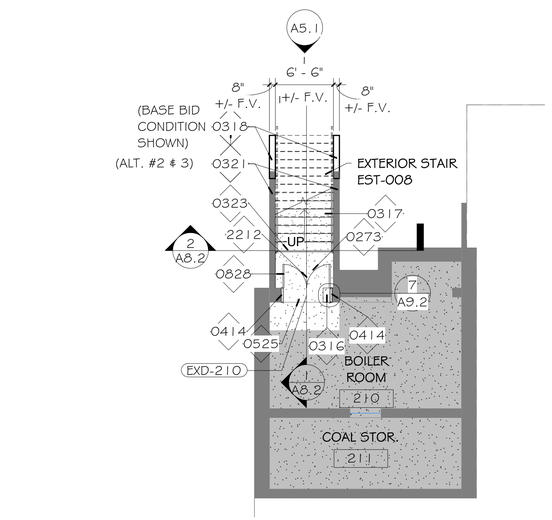

2 A3.1 N LOWER LEVEL BOILER ROOM
1/8" = 1'-0"

ALTERNATE #2 - STAIR EST-008 RETAINING WALLS: REMOVE & REPLACE RETAINING WALLS/ FOOTINGS IN THEIR ENTIRETY, (IF DETERMINED DURING DEMOLITION OF EXISTING STAIRS THAT RETAINING WALLS DO NOT EXTEND TO REQUIRED DEPTHS FOR THE NEW LESS STEEP CODE COMPLIANT STAIRS. SEE ALSO STRUCTURAL DRAWINGS.)

ALTERNATE #3 - NO WORK REQUIRED AT STAIR EST-008, HANDRAILS, SURROUNDING RETAINING WALLS & GUARDRAILS

SEE ALL NOTES ON GENERAL NOTES & ABBREVIATIONS SHEET A0.3:
- GENERAL NOTES
- ABBREVIATIONS

SEE ALSO GENERAL NOTES AND SYMBOLS ON SHEET A0.4
SEE ALL NOTES ON DEMOLITION GENERAL NOTES SHEET A0.5:
- HAZARDOUS MATERIALS GENERAL NOTES
- REGULATED MATERIAL ABATEMENT GENERAL NOTES
- GENERAL ASSET PROTECTION NOTES
- GENERAL DEMOLITION NOTES

SEE ALSO C, S, E & M DRAWINGS FOR C, S, E & M SCOPE OF WORK.

Keynote Legend	
Key Value	Keynote Text
0273	EXISTING CONCRETE @ BO. STAIRS TO BE REMOVED & REPLACED CAREFULLY TO PROTECT EXISTING DRAIN & PLUMBING TO REMAIN.
0316	RECONSTRUCT PORTION OF CONCRETE SILL AT DOOR WHERE CRACKED / BROKEN OFF. SEE ALSO STRUCTURAL DRAWINGS.
0317	NEW POURED IN PLACE CONCRETE STAIRS – SEE ALSO CIVIL AND STRUCTURAL DRAWINGS.
0318	BASE BID: NEW CONCRETE RETAINING WALL ENCLOSURE AS REQUIRED AT TOP END OF STAIR INCLUDING SIDE RETAINING WALLS AT EXTENDED STAIRWELL PORTION. SEE ALSO CIVIL AND STRUCTURAL DRAWINGS.
0320	NEW CONCRETE SLAB ON GRADE TOP LANDING. (48" MIN CLEAR LANDING DEPTH REQUIRED)
0321	ALTERNATE #2: STAIR EST-008 RETAINING WALLS: REMOVE & REPLACE RETAINING WALLS/ FOOTINGS IN THEIR ENTIRETY. SEE ALSO STRUCTURAL DRAWINGS. ALTERNATE #3: NO WORK REQUIRED AT STAIR EST-008, HANDRAILS, SURROUNDING RETAINING WALLS & GUARDRAIL.
0323	EXTEND NEW PORTION OF CONCRETE LANDING @ BOTTOM OF STAIRS AS NEEDED TO CREATE CODE COMPLIANT LANDING
0414	REPAIR ANY DAMAGE TO STONEWORK NEAR DOOR EXD-102 HEAD OR JAMBS CAUSED BY DEMOLITION & NEW CONSTRUCTION ACTIVITIES.
0522	1 ½" DIAMETER ROUND METAL HANDRAILS (COLOR: BLACK) SECURED TO CONCRETE RETAINING WALLS OR BRACED BACK TO POSTS WHERE ABOVE RETAINING WALL LEVEL. SEE DETAIL 8/A9.2.
0523	48" HIGH DECORATIVE METAL FENCE GUARDRAIL SURROUND AT NEW STAIR. (TO COMPLY WITH ALL APPLICABLE CODES AND ADA GUIDELINES. MOUNT GUARDRAIL POSTS ONTO BASEPLATES ON TOP OF CONCRETE RETAINING WALL PROVIDE ADEQUATE ATTACHMENT FOR GUARDRAIL LOADING REQUIREMENTS PER CODES. SEE ALSO STRUCTURAL & CIVIL DRAWINGS.
0524	DECORATIVE BLACK METAL GATES WITH LATCH AND LOCK. SEE CIVIL DRAWINGS FOR DETAILS.
0525	AFTER ABATEMENT CONTRACTOR REMOVES LBP, CONTRACTOR TO CAREFULLY CLEAN OUT EXISTING PACK RUST AT LINTEL AS MUCH AS POSSIBLE, SEAL JOINT BETWEEN MASONRY & STEEL, & PAINT THE REMAINING EXPOSED STEEL WITH A HIGH PERFORMANCE EXTERIOR RATED PAINT. PROVIDE TEMPORARY BRACING & SHORING AS REQUIRED AT DEMOLITION TO MAINTAIN & PROTECT SURROUNDING EXISTING STONEWORK, WALL & OPENING TO REMAIN. SEE ALSO STRUCT. DWGS.
0818	INSTALL NEW AWNING WINDOW UNITS WITH INSECT SCREEN & 4" OPENING LIMITER, FRP PANEL ABOVE & BELOW WINDOWS, SET IN NEW ALUMINUM STOREFRONT SYSTEM WITH NEW VERTICAL ALUMINUM CLOSURE STRIPS AT SIDES BY STOREFRONT MFR. (ALL TO MATCH FINISH AND COLOR OF MOST RECENTLY INSTALLED ALUMINUM STOREFRONT SYSTEM & FRP PANELS).
0819	NEW ALUMINUM STOREFRONT UNIT INCLUDING FRP DOORS, LITE BETWEEN, TRANSOM, AND FRAME. SEE EXTERIOR ELEVATIONS & DOOR TYPES FOR NEW CONFIGURATION. FIELD VERIFY EXISTING OPENING & CONDITIONS PRIOR TO REMOVING EXISTING & ORDERING NEW UNITS.
0820	ADD ALTERNATE #1 – NEW ALUMINUM STOREFRONT UNIT AT ENTRY EXD-C1X INCLUDING FRP DOORS, LITE BETWEEN, TRANSOM, & FRAME. SEE EXTERIOR ELEVATIONS & DOOR TYPES FOR NEW CONFIGURATION. FIELD VERIFY EXISTING OPENING & CONDITIONS PRIOR TO REMOVING EXISTING & ORDERING NEW UNITS.
0828	INSTALL FRP DOOR & HOLLOW METAL FRAME (GROUTED SOLID) INTO EXISTING OPENING. FIELD VERIFY OPENING BEFORE ORDERING NEW UNIT. SEE DOOR & WINDOW TYPES.
0926	INSTALL NEW INTERIOR PLAM WINDOW SILL TO MATCH EXISTING SILL IN EXISTING OPENING.
0927	REINSTALL SALVAGED BLINDS IN ORIGINAL LOCATIONS.
0934	REPLACE DAMAGED DRYWALL BELOW OR AROUND WINDOW OPENING. PAINT TO MATCH EXISTING AS REQUIRED. IF UNEXPECTED MOLD OR HAZARDOUS MATERIALS ARE ENCOUNTERED, STOP WORK IMMEDIATELY & NOTIFY OWNER.
2212	EXISTING DRAIN TO REMAIN.

bond architects
222 SOUTH CENTRAL AVE.
SUITE# 501
ST. LOUIS, MO 63105
TEL: 314.863.4994
FAX: 314.863.4996
www.bondarchitectsinc.com
Bond Architects, Inc.
Missouri State Certificate of Authority # 2009027409

COLE Design Group
Civil Engineer
Project Number: 26-0052
Certificate of Authority #
401 S. 18th Street, Suite 200
St Louis, MO 63103
314.984.9887 tel

RTM Engineering Consultants
MEP / FP Engineer
Project Number: 26.B00203.1928
Certificate of Authority #2002028690
3701 Lindbergh Blvd.
St Louis, MO 63127
314.725.5889 tel

CASE Engineering
STRUCTURAL Engineer
Project Number: BDA-MO-05-26
Certificate of Authority #001498
796 Merus Ct.
Fenton, MO 63026
636.349.1600 tel

Barretts Elementary School
1780 CARMAN RD., MANCHESTER, MO 63021
Parkway Project #: PN012501B
BUILDING RENOVATION & SITE IMPROVEMENTS

Parkway School District
363 N. Woods Mill Rd.
Chesterfield, MO 63017
314.415.8231 tel

Project No: 26016

Revisions

Description	Date

This drawing and the details on it are the sole property of the architect and may be used for this specific project only. It shall not be loaned, copied or reproduced, in whole or in part, or for any other purpose or project without the written consent of the Architect. Copyright © 2023 by Bond Architects, Inc.

STATE OF MISSOURI
MICHELLE R. WELLS
A-2021031961
ARCHITECT
11/12/26

The Professional Architects seal affixed to this sheet applies only to the material and items shown on this sheet. All drawings, instruments or other documents not exhibiting this seal shall not be considered prepared by this architect, and this architect expressly disclaims any and all responsibility for such plan, drawings or documents not exhibiting this seal.

DATE: 11/12/2026

BID/ PERMIT SET

ENLARGED PLANS

A3.1

11/5/2026 5:09:25 PM

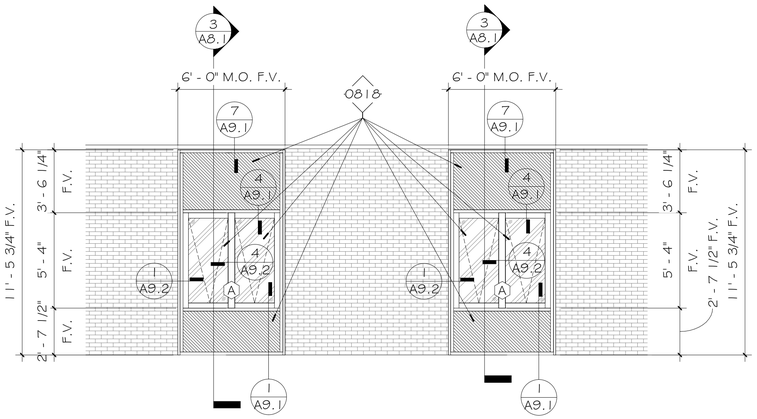

5 EXT. WINDOW 505 & 507
A5.1 1/4" = 1'-0" REF: 1/A3.1

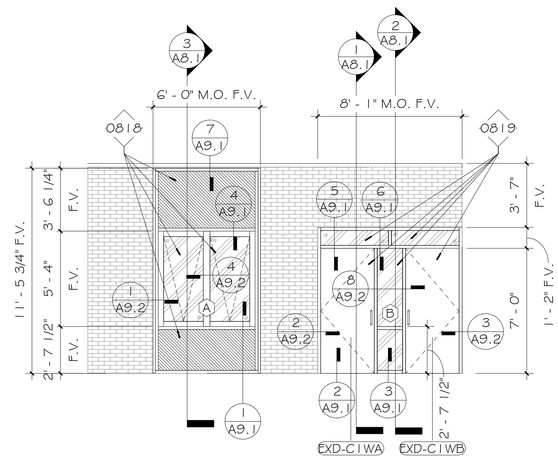

4 EXT. ELEVATION DOORS EXD-C1WA & EXD-C1WB & WINDOW 508
A5.1 1/4" = 1'-0" REF: 1/A3.1

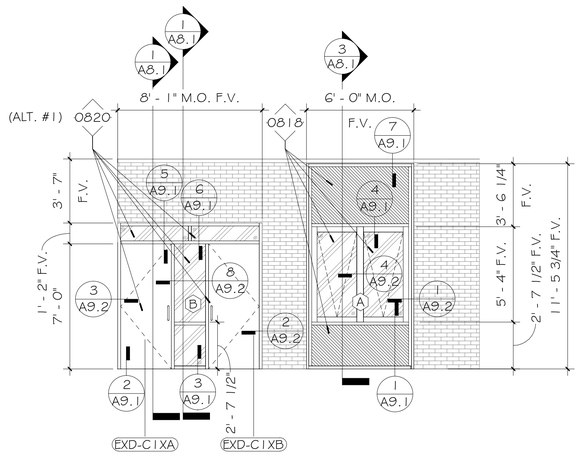

3 EXT. ELEVATION DOORS EXD-C1XA & EXD-C1XB & WINDOW 510
A5.1 1/4" = 1'-0" REF: 1/A3.1

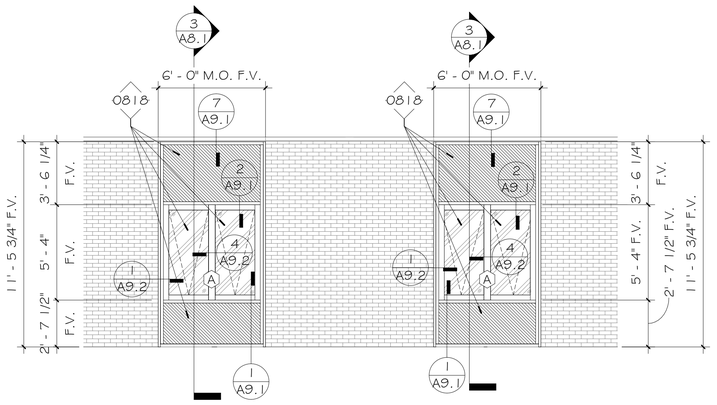

2 EXT. WINDOW 511 & 513
A5.1 1/4" = 1'-0" REF: 1/A3.1

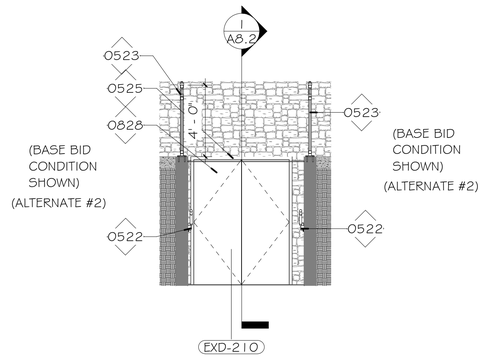

1 BOILER ROOM DOOR EXD-210
A5.1 1/4" = 1'-0" REF: 1/A2.0

Keynote Legend	
Key Value	Keynote Text
0522	1 ½" DIAMETER ROUND METAL HANDRAILS (COLOR: BLACK) SECURED TO CONCRETE RETAINING WALLS OR BRACED BACK TO POSTS WHERE ABOVE RETAINING WALL LEVEL. SEE DETAIL 8/A9.2.
0523	48" HIGH DECORATIVE METAL FENCE GUARDRAIL SURROUND AT NEW STAIR. (TO COMPLY WITH ALL APPLICABLE CODES AND ADA GUIDELINES. MOUNT GUARDRAIL POSTS ONTO BASEPLATES ON TOP OF CONCRETE RETAINING WALL PROVIDE ADEQUATE ATTACHMENT FOR GUARDRAIL LOADING REQUIREMENTS PER CODES. SEE ALSO STRUCTURAL & CIVIL DRAWINGS.
0525	AFTER ABATEMENT CONTRACTOR REMOVES LBP, CONTRACTOR TO CAREFULLY CLEAN OUT EXISTING PACK RUST AT LINTEL AS MUCH AS POSSIBLE, SEAL JOINT BETWEEN MASONRY & STEEL, & PAINT THE REMAINING EXPOSED STEEL WITH A HIGH PERFORMANCE EXTERIOR RATED PAINT. PROVIDE TEMPORARY BRACING & SHORING AS REQUIRED AT DEMOLITION TO MAINTAIN & PROTECT SURROUNDING EXISTING STONEWORK, WALL & OPENING TO REMAIN. SEE ALSO STRUCT. DWGS.
0818	INSTALL NEW AWNING WINDOW UNITS WITH INSECT SCREEN & 4" OPENING LIMITER, FRP PANEL ABOVE & BELOW WINDOWS, SET IN NEW ALUMINUM STOREFRONT SYSTEM WITH NEW VERTICAL ALUMINUM CLOSURE STRIPS AT SIDES BY STOREFRONT MFR. (ALL TO MATCH FINISH AND COLOR OF MOST RECENTLY INSTALLED ALUMINUM STOREFRONT SYSTEM & FRP PANELS).
0819	NEW ALUMINUM STOREFRONT UNIT INCLUDING FRP DOORS, LITE BETWEEN, TRANSOM, AND FRAME. SEE EXTERIOR ELEVATIONS & DOOR TYPES FOR NEW CONFIGURATION. FIELD VERIFY EXISTING OPENING & CONDITIONS PRIOR TO REMOVING EXISTING & ORDERING NEW UNITS.
0820	ADD ALTERNATE #1 – NEW ALUMINUM STOREFRONT UNIT AT ENTRY EXD-C1X INCLUDING FRP DOORS, LITE BETWEEN, TRANSOM, & FRAME. SEE EXTERIOR ELEVATIONS & DOOR TYPES FOR NEW CONFIGURATION. FIELD VERIFY EXISTING OPENING & CONDITIONS PRIOR TO REMOVING EXISTING & ORDERING NEW UNITS.
0828	INSTALL FRP DOOR & HOLLOW METAL FRAME (GROUTED SOLID) INTO EXISTING OPENING. FIELD VERIFY OPENING BEFORE ORDERING NEW UNIT. SEE DOOR & WINDOW TYPES.

ELEVATION GENERAL NOTES

1. WHERE ABANDONED DEVICES ARE REMOVED, PATCH AND REPAIR AS REQUIRED TO MATCH EXISTING FINISH MATERIAL.
2. ALL NEW BRICK OR STONE REPLACEMENT DUE TO DAMAGE DURING DEMO OR NEW CONSTRUCTION TO MATCH EXISTING IN COLOR, TEXTURE, FINISH, SIZE AND PROFILE UNLESS OTHERWISE NOTED. ALL NEW MASONRY JOINTS SHALL MATCH ORIGINAL IN COLOR, STRENGTH, COMPOSITION AND TOOLING PROFILE.
3. SALVAGE EXISTING, NON-DEFECTIVE STONE MATERIALS REMOVED DURING DEMOLITION FOR REUSE AT AREAS TO BE INFILLED.
4. REPLACE ALL EXTERIOR CAULK JOINTS WHERE WINDOWS OR DOORS ARE REMOVED AND REPLACED, TYPICAL.
5. REMOVE RUST AND RE-COAT EXISTING ANGLE AS REQUIRED. DO NOT "SPOT" CLEAN. IF EFFLORESCENCE OR STAINING IS EVIDENT, CLEAN ENTIRE PLANE OF WALL. CONTRACTOR TO VERIFY EXISTING CONDITION.
6. EXTERIOR STOREFRONT FINISH TO MATCH EXISTING FINISH, UNO.
7. VERTICAL MULLIONS IN EXTERIOR STOREFRONT TO BE SPACED EQUALLY, U.N.O.
8. EXTERIOR STOREFRONT GLASS TYPE TO BE PER GLAZING LEGEND AND DOOR & WINDOW TYPES U.N.O., SEE SPECS.
9. MINIMUM GLASS THICKNESSES TO MEET GANA PUBLICATION: "LAMINATED GLAZING REFERENCE MANUAL" AND "GLAZING MANUAL" AND IGMA PUBLICATION FOR INSULATING GLASS: SIGMA TM-3000, "NORTH AMERICAN GLAZING GUIDELINES FOR SEALED INSULATING GLASS UNITS FOR COMMERCIAL AND RESIDENTIAL USE."

ELEVATION MATERIALS: SEE SHEET A0.3 FOR MORE INFORMATION

	BR-1	EXISTING BRICK MASONRY
	FRP-1	FIBERGLASS REINFORCED PLASTIC PANELS
	ST-1	EXISTING STONE

SELECTIVE DEMOLITION NOTE – EXISTING DOORS AND WINDOWS:

REMOVE EXISTING DOOR AND WINDOW ASSEMBLIES WITH CARE AND PRECISION. PERFORM DEMOLITION IN A CONTROLLED MANNER TO PRESERVE ADJACENT CONSTRUCTION. PROTECT ALL SURFACES AROUND THE OPENING. PREVENT DAMAGE TO EXISTING MASONRY AND MAINTAIN THE INTEGRITY OF SURROUNDING MATERIALS. LIMIT DEMOLITION OF ADJACENT METAL STUD FRAMING, GYPSUM BOARD, FINISHES, AND OTHER WALL SURFACING TO A MAXIMUM OF 6 INCHES BEYOND THE PERIMETER OF THE EXISTING OPENING. REPAIR OR REPLACE ONLY THOSE MATERIALS NECESSARY TO FACILITATE INSTALLATION OF THE NEW ASSEMBLY AND RESTORE ADJACENT CONSTRUCTION TO MATCH EXISTING CONDITIONS. PAINTING OF REPAIRED WALL SHALL EXTEND TO NEAREST CORNER. CONTRACTOR RESPONSIBLE FOR REPAIRING ALL WALLS/CEILINGS/FLOORS BEYOND LIMITS ALLOWED. CONTRACTOR TO NOTIFY OWNER/ARCHITECT IMMEDIATELY IF UNFORESEEN CONDITIONS ARE UNCOVERED.

bond architects
222 SOUTH CENTRAL AVE.
SUITE# 501
ST. LOUIS, MO 63105
TEL: 314.863.4994
FAX: 314.863.4996
www.bondarchitectsinc.com
Bond Architects, Inc.
Missouri State Certificate of Authority # 2009027409

COLE Design Group
Civil Engineer
Project Number: 26-0052
Certificate of Authority #
401 S. 18th Street, Suite 200
St Louis, MO 63103
314.984.9887 tel

RTM Engineering Consultants
MEP / FP Engineer
Project Number: 26.B00203.1928
Certificate of Authority #2002028690
3701 Lindbergh Blvd.
St Louis, MO 63127
314.725.5889 tel

CASE Engineering
STRUCTURAL Engineer
Project Number: BDA-MO-05-26
Certificate of Authority #001498
796 Merus Ct.
Fenton, MO 63026
636.349.1600 tel

Barretts Elementary School

1780 CARMAN RD., MANCHESTER, MO 63021
Parkway Project #: PN012501B
BUILDING RENOVATION & IMPROVEMENTS

Parkway School District
363 N. Woods Mill Rd.
Chesterfield, MO 63017
314.415.8231 tel

Project No: 26016

Revisions

Description	Date

This drawing and the details on it are the sole property of the architect and may be used for this specific project only. It shall not be loaned, copied or reproduced, in whole or in part, or for any other purpose or project without the written consent of the Architect. Copyright © 2023 by Bond Architects, Inc.

STATE OF MISSOURI
MICHELLE R. WELLS
NUMBER A-2021031961
ARCHITECT
11/12/26

The Professional Architects seal affixed to this sheet applies only to the material and items shown on this sheet. All drawings, instruments or other documents not exhibiting this seal shall not be considered prepared by this architect, and this architect expressly disclaims any and all responsibility for such plan, drawings or documents not exhibiting this seal.

DATE: 11/12/2026

BID/ PERMIT SET

EXTERIOR ELEVATIONS

A5.1

11/5/2026 5:09:25 PM

SCALE: 3" = 1'-0"

SCALE: 1 1/2" = 1'-0"

SCALE: 1" = 1'-0"

SCALE: 3/4" = 1'-0"

SCALE: 1/2" = 1'-0"

SCALE: 1/4" = 1'-0"

SCALE: 1/8" = 1'-0"

SCALE: 1/16" = 1'-0"

11/5/2026 5:09:26 PM

EXISTING ROOF

1" INSULATED FRP PANEL, SEE WINDOW TYPES

EXIST. ACT CEILING

EXIST. WALL

AWNING-TYPE OPERABLE WINDOW UNIT WITH INSECT SCREEN W/ 4 IN. LIMITER

EXISTING GYPSUM WALL BOARD. PATCH, REPAIR, & PAINT AS NEEDED. SEE SELECTIVE DEMOLITION NOTE. REPLACE ANY DAMAGED DRYWALL AS OCCURS AROUND OR BELOW OPENING. IF UNEXPECTED HAZARDOUS MATERIALS OR MOLD ARE ENCOUNTERED, STOP WORK IMMEDIATELY & NOTIFY OWNER.

REPLACE SILL TO MATCH EXISTING @ SAME HEIGHT. SILL HEIGHT NOT TO EXCEED HEIGHT OF ADJACENT WINDOW MULLION

1" INSULATED FRP PANEL, SEE WINDOW TYPES

EXISTING FLOOR SLAB & FOUNDATION

EXISTING CONCRETE SILL

7 / A9.1

4 / A9.1

1 / A9.1

3' - 6 1/4" F.V.

5' - 4"

11' - 5 3/4" F.V.

4" MAX

2' - 7" F.V.

2' - 7 1/2"

5 1/2"

NOTE: ALUMINUM STOREFRONT SYSTEMS TO ALLOW FOR FUTURE REPLACEMENT OF WINDOW UNITS, DOORS, SIDELIGHTS, TRANSOMS, & FRP PANELS TO BE REMOVED & REPLACED INDEPENDENTLY OF EACH OTHER.

3 / A8.1 WALL SECTION @ TYPICAL EXTERIOR WINDOW
1/2" = 1'-0" REF: 1/A3.1

ALUMINUM STOREFRONT (MATCH EXISTING BRONZE FINISH.)

1" INSULATED GLAZING, SEE WINDOW TYPES

EXISTING ACT CEILING

ALUMINUM STOREFRONT (MATCH EXISTING BRONZE FINISH.)

EXISTING GYPSUM WALL BOARD. PATCH, REPAIR, & PAINT AS NEEDED. SEE SELECTIVE DEMOLITION NOTE. REPLACE ANY DAMAGED DRYWALL AS OCCURS AROUND OR BELOW OPENING. IF UNEXPECTED HAZARDOUS MATERIALS OR MOLD ARE ENCOUNTERED, STOP WORK IMMEDIATELY & NOTIFY OWNER.

1" INSULATED GLAZING, SEE WINDOW TYPES

ALUMINUM STOREFRONT (MATCH EXISTING BRONZE FINISH.)

1" INSULATED GLAZING, SEE WINDOW TYPES

ALUMINUM STOREFRONT (MATCH EXISTING BRONZE FINISH.)

6 / A9.1

3 / A9.1

1' - 2" F.V.

4' - 4 1/2" F.V.

8' - 2" F.V.

2' - 7 1/2"

EXISTING SOFFIT, PATCH, REPAIR, & PAINT AS NEEDED

EXISTING BRICK WALL BEYOND

PROTECT EXISTING CONCRETE SLAB ON GRADE

2 / A8.1 WALL SECTION AT TYPICAL STOREFRONT SIDELITE @ CORRIDOR
1/2" = 1'-0" REF: 1/A3.1

ALUMINUM STOREFRONT (MATCH EXISTING BRONZE FINISH.)

1" INSULATED GLAZING, SEE WINDOW TYPES

EXISTING ACT CEILING

ALUMINUM STOREFRONT (MATCH EXISTING BRONZE FINISH.)

EXISTING GYPSUM WALL BOARD. PATCH, REPAIR, & PAINT AS NEEDED. SEE SELECTIVE DEMOLITION NOTE. REPLACE ANY DAMAGED DRYWALL AS OCCURS AROUND OR BELOW OPENING. IF UNEXPECTED HAZARDOUS MATERIALS OR MOLD ARE ENCOUNTERED, STOP WORK IMMEDIATELY & NOTIFY OWNER.

INSTALL FRP DOOR & HOLLOW METAL FRAME (GROUTED SOLID) INTO EXISTING OPENING. FIELD VERIFY OPENING BEFORE ORDERING NEW UNIT. SEE DOOR & WINDOW TYPES.

ALUMINUM STOREFRONT DOOR FRAME

DOOR THRESHOLD

5 / A9.1

2 / A9.1

1' - 2" F.V.

7' - 0" F.V.

8' - 2" F.V.

EXISTING SOFFIT, PATCH, REPAIR, & PAINT AS NEEDED

EXISTING BRICK WALL BEYOND

PROTECT EXISTING CONCRETE SLAB ON GRADE

1 / A8.1 WALL SECTION AT TYPICAL EXTERIOR DOOR @ CORRIDOR
1/2" = 1'-0" REF: 1/A3.1

SELECTIVE DEMOLITION NOTE – EXISTING DOORS AND WINDOWS:

REMOVE EXISTING DOOR AND WINDOW ASSEMBLIES WITH CARE AND PRECISION. PERFORM DEMOLITION IN A CONTROLLED MANNER TO PRESERVE ADJACENT CONSTRUCTION. PROTECT ALL SURFACES AROUND THE OPENING. PREVENT DAMAGE TO EXISTING MASONRY AND MAINTAIN THE INTEGRITY OF SURROUNDING MATERIALS. LIMIT DEMOLITION OF ADJACENT METAL STUD FRAMING, GYPSUM BOARD, FINISHES, AND OTHER WALL SURFACING TO A MAXIMUM OF 6 INCHES BEYOND THE PERIMETER OF THE EXISTING OPENING. REPAIR OR REPLACE ONLY THOSE MATERIALS NECESSARY TO FACILITATE INSTALLATION OF THE NEW ASSEMBLY AND RESTORE ADJACENT CONSTRUCTION TO MATCH EXISTING CONDITIONS. PAINTING OF REPAIRED WALL SHALL EXTEND TO NEAREST CORNER. CONTRACTOR RESPONSIBLE FOR REPAIRING ALL WALLS/CEILINGS/FLOORS BEYOND LIMITS ALLOWED. CONTRACTOR TO NOTIFY OWNER/ARCHITECT IMMEDIATELY IF UNFORESEEN CONDITIONS ARE UNCOVERED.

bond architects
222 SOUTH CENTRAL AVE.
SUITE# 501
ST. LOUIS, MO 63105
TEL: 314.863.4994
FAX: 314.863.4996
www.bondarchitectsinc.com
Bond Architects, Inc.
Missouri State Certificate of Authority # 2009027409

COLE Design Group
Civil Engineer
Project Number: 26-0052
Certificate of Authority #
401 S. 18th Street, Suite 200
St Louis, MO 63103
314.984.9887 tel

RTM Engineering Consultants
MEP / FP Engineer
Project Number: 26.B00203.1928
Certificate of Authority #2002028690
3701 Lindbergh Blvd.
St Louis, MO 63127
314.725.5889 tel

CASE Engineering
STRUCTURAL Engineer
Project Number: BDA-MO-05-26
Certificate of Authority #001498
796 Merus Ct.
Fenton, MO 63026
636.349.1600 tel

Barretts Elementary School
1780 CARMAN RD., MANCHESTER, MO 63021
Parkway Project #: PN012501B
BUILDING RENOVATION & SITE IMPROVEMENTS
Parkway School District
363 N. Woods Mill Rd.
Chesterfield, MO 63017
314.415.8231 tel

Project No: 26016

Revisions

Description	Date

This drawing and the details on it are the sole property of the architect and may be used for this specific project only. It shall not be loaned, copied or reproduced, in whole or in part, or for any other purpose or project without the written consent of the Architect. Copyright © 2023 by Bond Architects, Inc.

STATE OF MISSOURI
MICHELLE R. WELLS
NUMBER A-2021031961
ARCHITECT
11/12/26

The Professional Architects seal affixed to this sheet applies only to the material and items shown on this sheet. All drawings, instruments or other documents not exhibiting this seal shall not be considered prepared by this architect, and this architect expressly disclaims any and all responsibility for such plan, drawings or documents not exhibiting this seal.

DATE: 11/12/2026

BID/ PERMIT SET

WALL SECTIONS

A8.1

SCALE: 3" = 1'-0"

SCALE: 1 1/2" = 1'-0"

SCALE: 1" = 1'-0"

SCALE: 3/4" = 1'-0"

SCALE: 1/2" = 1'-0"

SCALE: 1/4" = 1'-0"

SCALE: 1/8" = 1'-0"

SCALE: 1/16" = 1'-0"

11/5/2026 5:09:26 PM

SELECTIVE DEMOLITION NOTE – EXISTING DOORS AND WINDOWS:

REMOVE EXISTING DOOR AND WINDOW ASSEMBLIES WITH CARE AND PRECISION. PERFORM DEMOLITION IN A CONTROLLED MANNER TO PRESERVE ADJACENT CONSTRUCTION. PROTECT ALL SURFACES AROUND THE OPENING. PREVENT DAMAGE TO EXISTING MASONRY AND MAINTAIN THE INTEGRITY OF SURROUNDING MATERIALS. LIMIT DEMOLITION OF ADJACENT METAL STUD FRAMING, GYPSUM BOARD, FINISHES, AND OTHER WALL SURFACING TO A MAXIMUM OF 6 INCHES BEYOND THE PERIMETER OF THE EXISTING OPENING. REPAIR OR REPLACE ONLY THOSE MATERIALS NECESSARY TO FACILITATE INSTALLATION OF THE NEW ASSEMBLY AND RESTORE ADJACENT CONSTRUCTION TO MATCH EXISTING CONDITIONS. PAINTING OF REPAIRED WALL SHALL EXTEND TO NEAREST CORNER. CONTRACTOR RESPONSIBLE FOR REPAIRING ALL WALLS/CEILINGS/FLOORS BEYOND LIMITS ALLOWED. CONTRACTOR TO NOTIFY OWNER/ARCHITECT IMMEDIATELY IF UNFORESEEN CONDITIONS ARE UNCOVERED.

48" HIGH DECORATIVE METAL FENCE GUARDRAIL SURROUND AT NEW STAIR. (TO COMPLY WITH ALL APPLICABLE CODES AND ADA GUIDELINES. MOUNT GUARDRAIL POSTS ONTO BASEPLATES ON TOP OF CONCRETE RETAINING WALL PROVIDE ADEQUATE ATTACHMENT FOR GUARDRAIL LOADING REQUIREMENTS PER CODES. SEE ALSO STRUCTURAL & CIVIL DRAWINGS.

AFTER ABATEMENT CONTRACTOR REMOVES LBP, CONTRACTOR TO CAREFULLY CLEAN OUT EXISTING PACK RUST AT LINTEL AS MUCH AS POSSIBLE, SEAL JOINT BETWEEN MASONRY & STEEL, & PAINT THE REMAINING EXPOSED STEEL WITH A HIGH PERFORMANCE EXTERIOR RATED PAINT. PROVIDE TEMPORARY BRACING & SHORING AS REQUIRED AT DEMOLITION TO MAINTAIN & PROTECT SURROUNDING EXISTING STONEWORK, WALL & OPENING TO REMAIN. SEE ALSO STRUCT. DWGS.

INSTALL FRP DOOR & HOLLOW METAL FRAME (GROUTED SOLID) INTO EXISTING OPENING. FIELD VERIFY OPENING BEFORE ORDERING NEW UNIT. SEE DOOR & WINDOW TYPES.

RECONSTRUCT PORTION OF CONCRETE SILL AT DOOR WHERE CRACKED / BROKEN OFF. SEE ALSO STRUCTURAL DRAWINGS.

EXISTING CONCRETE @ BO. STAIRS TO BE REMOVED & REPLACED CAREFULLY TO PROTECT EXISTING DRAIN & PLUMBING TO REMAIN.

EXISTING DRAIN TO REMAIN.

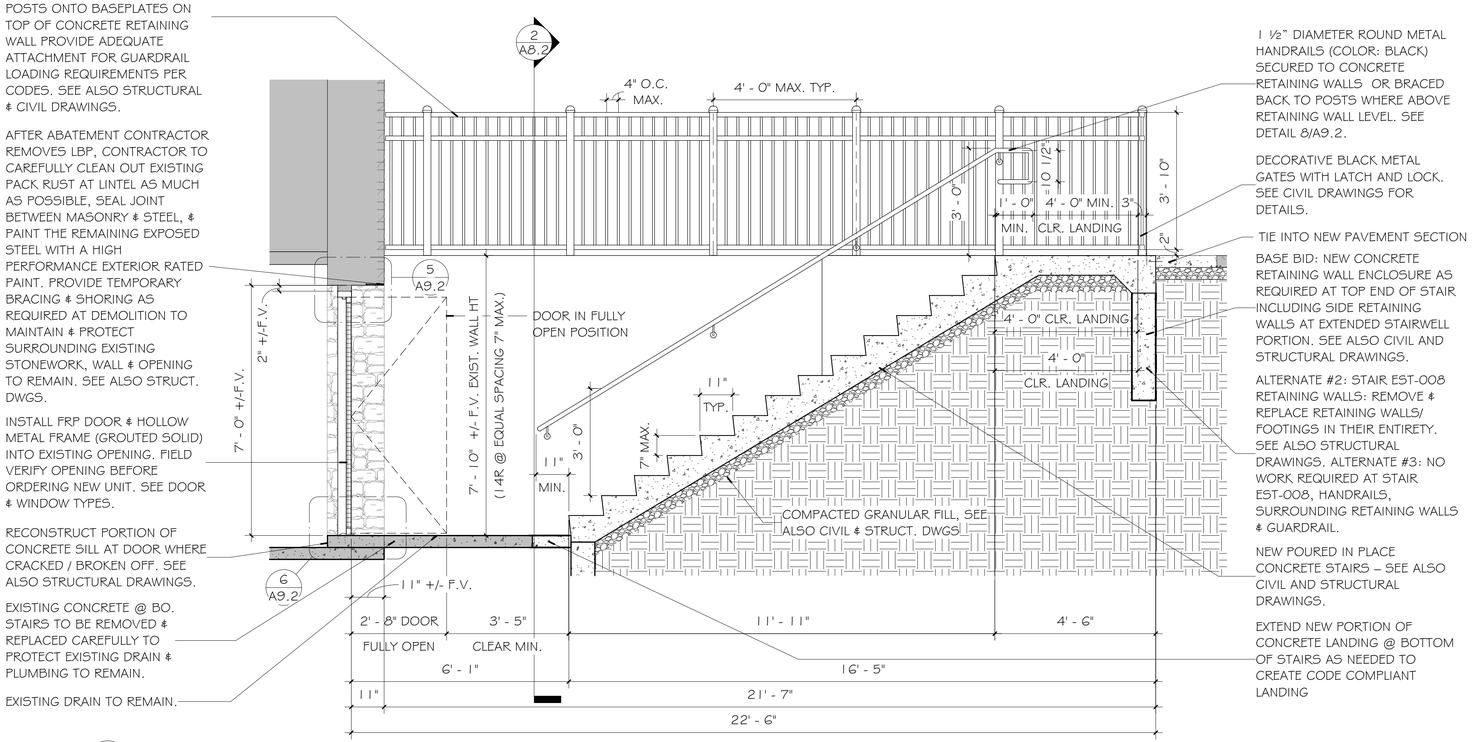

1 A8.2 BOILER STAIRS SECTION
1/2" = 1'-0" REF: 2/A3.1

1 ½" DIAMETER ROUND METAL HANDRAILS (COLOR: BLACK) SECURED TO CONCRETE RETAINING WALLS OR BRACED BACK TO POSTS WHERE ABOVE RETAINING WALL LEVEL. SEE DETAIL 8/A9.2.

DECORATIVE BLACK METAL GATES WITH LATCH AND LOCK. SEE CIVIL DRAWINGS FOR DETAILS.

TIE INTO NEW PAVEMENT SECTION

BASE BID: NEW CONCRETE RETAINING WALL ENCLOSURE AS REQUIRED AT TOP END OF STAIR INCLUDING SIDE RETAINING WALLS AT EXTENDED STAIRWELL PORTION. SEE ALSO CIVIL AND STRUCTURAL DRAWINGS.

ALTERNATE #2: STAIR EST-008 RETAINING WALLS: REMOVE & REPLACE RETAINING WALLS/ FOOTINGS IN THEIR ENTIRETY. SEE ALSO STRUCTURAL DRAWINGS. ALTERNATE #3: NO WORK REQUIRED AT STAIR EST-008, HANDRAILS, SURROUNDING RETAINING WALLS & GUARDRAIL.

NEW POURED IN PLACE CONCRETE STAIRS – SEE ALSO CIVIL AND STRUCTURAL DRAWINGS.

EXTEND NEW PORTION OF CONCRETE LANDING @ BOTTOM OF STAIRS AS NEEDED TO CREATE CODE COMPLIANT LANDING

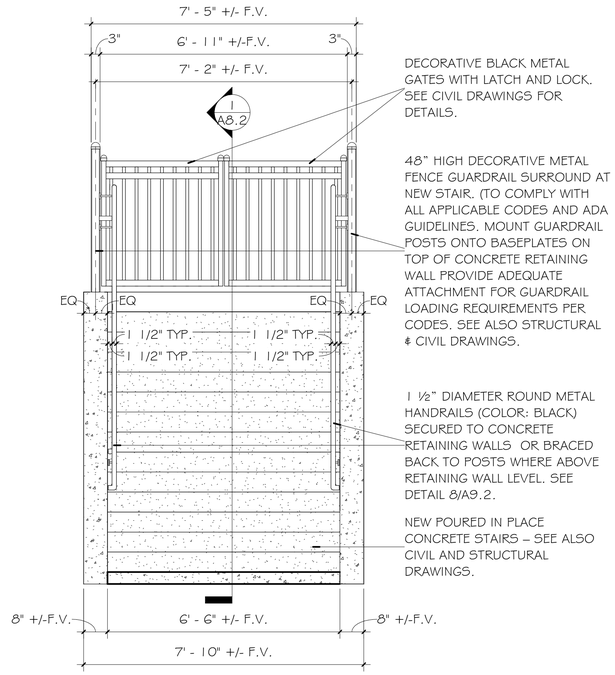

2 A8.2 BOILER STAIRS SECTION 2
1/2" = 1'-0" REF: 2/A3.1

bond architects
222 SOUTH CENTRAL AVE.
SUITE# 501
ST. LOUIS, MO 63105
TEL: 314.863.4994
FAX: 314.863.4996
www.bondarchitectsinc.com
Bond Architects, Inc.
Missouri State Certificate of Authority # 2009027409

COLE Design Group
Civil Engineer
Project Number: 26-0052
Certificate of Authority #
401 S. 18th Street, Suite 200
St Louis, MO 63103
314.984.9887 tel

RTM Engineering Consultants
MEP / FP Engineer
Project Number: 26.B00203.1928
Certificate of Authority #2002028690
3701 Lindbergh Blvd.
St Louis, MO 63127
314.725.5889 tel

CASE Engineering
STRUCTURAL Engineer
Project Number: BDA-MO-05-26
Certificate of Authority #001498
796 Merus Ct.
Fenton, MO 63026
636.349.1600 tel

Barretts Elementary School
1780 CARMAN RD., MANCHESTER, MO 63021
Parkway Project #: PN012501B
BUILDING RENOVATION & SITE IMPROVEMENTS
Parkway School District
363 N. Woods Mill Rd.
Chesterfield, MO 63017
314.415.8231 tel

Project No: 26016

Revisions

Description	Date

This drawing and the details on it are the sole property of the architect and may be used for this specific project only. It shall not be loaned, copied or reproduced, in whole or in part, or for any other purpose or project without the written consent of the Architect. Copyright © 2023 by Bond Architects, Inc.

STATE OF MISSOURI
MICHELLE R. WELLS
NUMBER A-2021031961
ARCHITECT
11/12/26

The Professional Architects seal affixed to this sheet applies only to the material and items shown on this sheet. All drawings, instruments or other documents not exhibiting this seal shall not be considered prepared by this architect, and this architect expressly disclaims any and all responsibility for such plan, drawings or documents not exhibiting this seal.

DATE: 11/12/2026

BID/ PERMIT SET

WALL SECTIONS

A8.2

Save

SCALE: 3" = 1'-0" (0, 0.25', 0.5', 1')
SCALE: 1 1/2" = 1'-0" (0, 0.5', 1', 2')
SCALE: 1" = 1'-0" (0, 0.5', 1', 2')
SCALE: 3/4" = 1'-0" (0, 1', 2', 3')
SCALE: 1/2" = 1'-0" (0, 1', 2', 4')
SCALE: 1/4" = 1'-0" (0, 2', 4', 8')
SCALE: 1/8" = 1'-0" (0, 4', 8', 16')
SCALE: 1/16" = 1'-0" (0, 8', 16', 32')

FIRE TREATED WOOD BLOCKING
EXISTING ACT CEILING
EXISTING GYPSUM WALL BOARD. PATCH, REPAIR, & PAINT AS NEEDED. SEE SELECTIVE DEMOLITION NOTE. REPLACE ANY DAMAGED DRYWALL AS OCCURS AROUND OR BELOW OPENING. IF UNEXPECTED HAZARDOUS MATERIALS OR MOLD ARE ENCOUNTERED, STOP WORK IMMEDIATELY & NOTIFY OWNER.
ALUMINUM STOREFRONT (MATCH EXISTING BRONZE FINISH.)
1" INSULATED GLAZING, SEE WINDOW TYPES
ALUMINUM STOREFRONT (MATCH EXISTING BRONZE FINISH.)
1" INSULATED GLAZING, SEE WINDOW TYPES
PROTECT EXISTING WOOD BLOCKING TO REMAIN
EXISTING METAL STUD
EXISTING SOFFIT, PATCH, REPAIR, & PAINT AS NEEDED
CONTINUOUS BACKERROD AND SEALANT, TYPICAL @ EACH SIDE OF SHIM
EXISTING BRICK WALL BEYOND
7/8"
2 5/8"
1"
4 1/2"
(INTERIOR SIDE)
(EXTERIOR SIDE)

6 / A9.1 STOREFRONT TRANSOM/LITE HEAD DETAIL @ CORRIDOR
1 1/2" = 1'-0" REF: 3/A5.1

SELECTIVE DEMOLITION NOTE – EXISTING DOORS AND WINDOWS:

REMOVE EXISTING DOOR AND WINDOW ASSEMBLIES WITH CARE AND PRECISION. PERFORM DEMOLITION IN A CONTROLLED MANNER TO PRESERVE ADJACENT CONSTRUCTION. PROTECT ALL SURFACES AROUND THE OPENING. PREVENT DAMAGE TO EXISTING MASONRY AND MAINTAIN THE INTEGRITY OF SURROUNDING MATERIALS. LIMIT DEMOLITION OF ADJACENT METAL STUD FRAMING, GYPSUM BOARD, FINISHES, AND OTHER WALL SURFACING TO A MAXIMUM OF 6 INCHES BEYOND THE PERIMETER OF THE EXISTING OPENING. REPAIR OR REPLACE ONLY THOSE MATERIALS NECESSARY TO FACILITATE INSTALLATION OF THE NEW ASSEMBLY AND RESTORE ADJACENT CONSTRUCTION TO MATCH EXISTING CONDITIONS. PAINTING OF REPAIRED WALL SHALL EXTEND TO NEAREST CORNER. CONTRACTOR RESPONSIBLE FOR REPAIRING ALL WALLS/CEILINGS/FLOORS BEYOND LIMITS ALLOWED. CONTRACTOR TO NOTIFY OWNER/ARCHITECT IMMEDIATELY IF UNFORESEEN CONDITIONS ARE UNCOVERED.

FIRE TREATED WOOD BLOCKING
EXISTING ACT CEILING
CONTINUOUS BACKERROD AND SEALANT, TYPICAL @ EACH SIDE OF SHIM
ALUMINUM STOREFRONT (MATCH EXISTING BRONZE FINISH.)
1" INSULATED GLAZING, SEE WINDOW TYPES
ALUMINUM STOREFRONT DOOR FRAME
EXISTING GYPSUM WALL BOARD. PATCH, REPAIR & PAINT AS NEEDED
PROTECT EXISTING WOOD BLOCKING TO REMAIN
EXISTING METAL STUD
EXISTING SOFFIT, PATCH, REPAIR, & PAINT AS NEEDED
EXISTING BRICK WALL BEYOND
INSTALL FRP DOOR & HOLLOW METAL FRAME (GROUTED SOLID) INTO EXISTING OPENING. FIELD VERIFY OPENING BEFORE ORDERING NEW UNIT. SEE DOOR & WINDOW TYPES.
2 1/4"
1/2"
1 3/4"
4 1/2"
(INTERIOR SIDE)
(EXTERIOR SIDE)

5 / A9.1 TRANSOM/DOOR HEAD DETAIL (TYPICAL) @ CORRIDOR
1 1/2" = 1'-0" REF: 3/A5.1

PROTECT EXISTING WOOD BLOCKING TO REMAIN
PROTECT EXISTING COMP. ROOF
PROTECT EXISTING ROOFING INSULATION TO REMAIN
PROTECT EXISTING METAL DECK TO REMAIN.
PROTECT EXISTING STEEL STRUCTURE TO REMAIN.
ALUMINUM STOREFRONT (MATCH EXISTING BRONZE FINISH.)
1" INSULATED FRP PANEL, SEE WINDOW TYPES
EXISTING BRICK WALL BEYOND
PROTECT EXISTING ALUMINUM GRAVEL STOP TO REMAIN
AIR/VAPOR BARRIER
FIRE TREATED WOOD BLOCKING
ALUMINUM FLASHING CLOSER STRIP WITH DURANODIC BROZE FINISH (BY ALUM. STOREFRONT MFR) TO MATCH STOREFRONT FINISH. PROVIDE SLOPED OFFSET & DRIP EDGE.
CONTINUOUS BACKERROD AND SEALANT, TYPICAL @ EACH SIDE OF SHIM
4 1/2"
4 1/8" F.V.
8 5/8" F.V.

7 / A9.1 STOREFRONT WINDOW "A" UPPER FRP PANEL HEAD DETAIL (TYPICAL)
1 1/2" = 1'-0" REF: 2/A5.1

EXISTING METAL FURRING CHANNEL F.V.
EXISTING CONCRETE MASONRY UNIT
EXISTING GYPSUM WALL BOARD. PATCH, REPAIR, & PAINT AS NEEDED. SEE SELECTIVE DEMOLITION NOTE. REPLACE ANY DAMAGED DRYWALL AS OCCURS AROUND OR BELOW OPENING. IF UNEXPECTED HAZARDOUS MATERIALS OR MOLD ARE ENCOUNTERED, STOP WORK IMMEDIATELY & NOTIFY OWNER.
1' - 6 5/8" F.V.
10" F.V.
4 1/2"
4 1/8" F.V.
EXISTING BRICK WALL BEYOND
1" INSULATED FRP PANEL, SEE WINDOW TYPES
ALUMINUM STOREFRONT (MATCH EXISTING BRONZE FINISH.)
1" INSULATED GLAZING, SEE WINDOW TYPES
AWNING-TYPE OPERABLE WINDOW UNIT WITH INSECT SCREEN W/ 4 IN. LIMITER

4 / A9.1 AWNING WINDOW "A" HEAD DETAIL (TYPICAL)
1 1/2" = 1'-0" REF: 3/A5.1

1" INSULATED GLAZING, SEE WINDOW TYPES
ALUMINUM STOREFRONT (MATCH EXISTING BRONZE FINISH.)
EXISTING GYPSUM WALL BOARD. PATCH, REPAIR & PAINT AS NEEDED
1" INSULATED FIBERGLASS REINFORCED PANEL (FRP), SEE WINDOW TYPES
ALUMINUM STOREFRONT (MATCH EXISTING BRONZE FINISH.)
SILL FLASHING BY STOREFRONT MFR.
EXISTING FLOORING, PATCH & REPAIR AS NEEDED
FIRE TREATED WOOD BLOCKING/ SHIM & BACKER ROD EACH SIDE
EXISTING CHANNEL TO BE CUT FLUSH WITH FLOOR SLAB & REMOVE TOP PORTION.
4 1/2"
2 5/8"
7/8"
1"
2 - 7 1/2"
4"
4 1/2"
2"
1"
3 1/2"
CONTINUOUS BACKER ROD AND SEALANT EACH SIDE
EXISTING STONE SILL TO REMAIN
PROTECT EXISTING CONCRETE SLAB ON GRADE
6 1/2"
5 1/2"
(INTERIOR SIDE)
(EXTERIOR SIDE)

3 / A9.1 STOREFRONT LITE SILL DETAIL @ CORRIDOR
1 1/2" = 1'-0" REF: 3/A5.1

EXISTING GYPSUM WALL BOARD. PATCH, REPAIR, & PAINT AS NEEDED. SEE SELECTIVE DEMOLITION NOTE. REPLACE ANY DAMAGED DRYWALL AS OCCURS AROUND OR BELOW OPENING. IF UNEXPECTED HAZARDOUS MATERIALS OR MOLD ARE ENCOUNTERED, STOP WORK IMMEDIATELY & NOTIFY OWNER.
IMPORTANT NOTE:
INTERIOR FACE OF NEW STOREFRONT FRAME TO BE SET AT INTERIOR FACE OF EXISTING STEEL STOREFRONT FRAME. (THEREFORE THE EXTRA 1" WIDTH OF FRAME IS TO EXPAND OUTWARD TOWARD THE EXTERIOR SIDE OF THE BUILDING.) (INTERIOR FACE OF STOREFRONT FRAME TO BE SET 4" FROM INTERIOR FACE OF MASONRY WALL & FOUNDATION WALL BELOW.)
4 1/2"
2 1/4"
1 3/4"
1/2"
ALUMINUM STOREFRONT DOOR FRAME
DOOR SWEEP
ADA ACCISSIBLE DOOR THRESHOLD
EXISTING FLOORING, PATCH & REPAIR AS NEEDED
EXISTING BRICK WALL BEYOND
INSTALL FRP DOOR & HOLLOW METAL FRAME (GROUTED SOLID) INTO EXISTING OPENING. FIELD VERIFY OPENING BEFORE ORDERING NEW UNIT. SEE DOOR & WINDOW TYPES.
6 1/2"
5 1/2"
1"
PROTECT EXISTING CONCRETE SLAB ON GRADE
(INTERIOR SIDE)
(EXTERIOR SIDE)

2 / A9.1 DOOR SILL DETAIL @ CORRIOR
1 1/2" = 1'-0" REF: 2/A5.1

(INTERIOR SIDE)
(EXTERIOR SIDE)
1' - 6 5/8" F.V.
10" F.V.
4 1/2"
4 1/8" F.V.
EXISTING GYPSUM WALL BOARD. PATCH, REPAIR, & PAINT AS NEEDED. SEE SELECTIVE DEMOLITION NOTE. REPLACE ANY DAMAGED DRYWALL AS OCCURS AROUND OR BELOW OPENING. IF UNEXPECTED HAZARDOUS MATERIALS OR MOLD ARE ENCOUNTERED, STOP WORK IMMEDIATELY & NOTIFY OWNER.
¾" PLYWOOD SILL WITH PLAM ON EXPOSED EDGES TO MATCH EXISTING
REPLACE SILL TO MATCH EXISTING @ SAME HEIGHT. SILL HEIGHT NOT TO EXCEED HEIGHT OF ADJACENT WINDOW MULLION
1 ½" X 1 ½" X 1/8" CLIP ANGLES AS REQUIRED FOR SUPPORT OF SILL.
SILL FLASHING BY STOREFRONT MFR.
2' - 7" SILL TYP.
AWNING-TYPE OPERABLE WINDOW UNIT WITH INSECT SCREEN W/ 4 IN. LIMITER
1" INSULATED GLAZING, SEE WINDOW TYPES
EXISTING BRICK WALL BEYOND
1" INSULATED FRP PANEL, SEE WINDOW TYPES
ALUMINUM STOREFRONT (MATCH EXISTING BRONZE FINISH.)
FIRE TREATED WOOD BLOCKING
CONTINUOUS BACKERROD AND SEALANT, TYPICAL @ EACH SIDE OF SHIM
EXISTING CONCRETE SILL

NOTE: ALUMINUM STOREFRONT SYSTEMS TO ALLOW FOR FUTURE REPLACEMENT OF WINDOW UNITS, DOORS, SIDELITES, TRANSOMS, & FRP PANELS TO BE REMOVED & REPLACED INDEPENDENTLY OF EACH OTHER.

1 / A9.1 AWNING WINDOW "A" & FRP PANEL SILL DETAIL (TYPICAL)
1 1/2" = 1'-0" REF: 2/A5.1

bond architects
222 SOUTH CENTRAL AVE.
SUITE# 501
ST. LOUIS, MO 63105
TEL: 314.863.4994
FAX: 314.863.4996
www.bondarchitectsinc.com
Bond Architects, Inc.
Missouri State Certificate of Authority # 2009027409

COLE Design Group
Civil Engineer
Project Number: 26-0052
Certificate of Authority #
401 S. 18th Street, Suite 200
St Louis, MO 63103
314.984.9887 tel

RTM Engineering Consultants
MEP / FP Engineer
Project Number: 26.B00203.1928
Certificate of Authority #2002028690
3701 Lindbergh Blvd.
St Louis, MO 63127
314.725.5889 tel

CASE Engineering
STRUCTURAL Engineer
Project Number: BDA-MO-05-26
Certificate of Authority #001498
796 Merus Ct.
Fenton, MO 63026
636.349.1600 tel

Barretts Elementary School

1780 CARMAN RD., MANCHESTER, MO 63021
Parkway Project #: PN012501B
BUILDING RENOVATION & SITE IMPROVEMENTS

Parkway School District
363 N. Woods Mill Rd.
Chesterfield MO 63017
314.415.6231 tel

Project No: 26016

Revisions

Description	Date

This drawing and the details on it are the sole property of the architect and may be used for this specific project only. It shall not be loaned, copied or reproduced, in whole or in part, or for any other purpose or project without the written consent of the Architect. Copyright © 2023 by Bond Architects, Inc.

STATE OF MISSOURI
MICHELLE R. WELLS
NUMBER A-2021031961
ARCHITECT
11/12/26

The Professional Architects seal affixed to this sheet applies only to the material and items shown on this sheet. All drawings, instruments or other documents not exhibiting this seal shall not be considered prepared by this architect, and this architect expressly disclaims any and all responsibility for such plan, drawings or documents not exhibiting this seal.

DATE: 11/12/2026

BID/ PERMIT SET

EXTERIOR DETAILS

A9.1

11/5/2026 5:09:27 PM

Save

SCALE: 3" = 1'-0" 1 0.5 0

SCALE: 1 1/2" = 1'-0" 2 1 0.5 0

SCALE: 1" = 1'-0" 2 1 0

SCALE: 3/4" = 1'-0" 3 2 1 0

SCALE: 1/2" = 1'-0" 4 2 1 0

SCALE: 1/4" = 1'-0" 8 4 2 0

SCALE: 1/8" = 1'-0" 16 8 4 0

SCALE: 1/16" = 1'-0" 32 16 8 0

11/5/2026 5:09:28 PM

GENERAL NOTE: EXISTING SURFACES & DIMENSIONS VARY AT HEAD, JAMB, & SILL AT DOOR EXD-210! FIELD VERIFY ALL DIMENSIONS PRIOR TO ORDERING DOOR & FRAME!

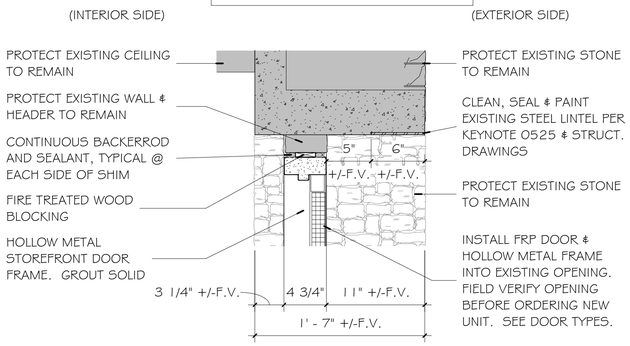

5 A9.2 BOILER ROOM DOOR EXD-210 HEAD
1 1/2" = 1'-0" REF: 1/A8.2

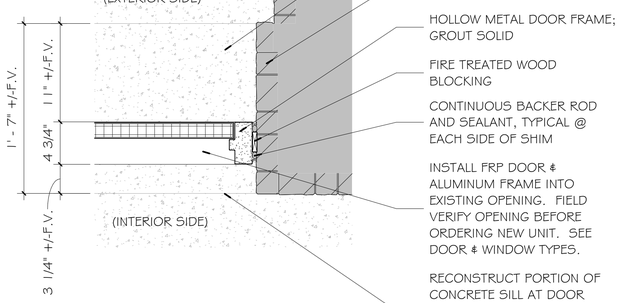

7 A9.2 BOILER ROOM DOOR EXD-210 JAMB
1 1/2" = 1'-0" REF: 2/A3.1

SEE SELECTIVE DEMOLITION NOTE – EXISTING DOORS AND WINDOWS:

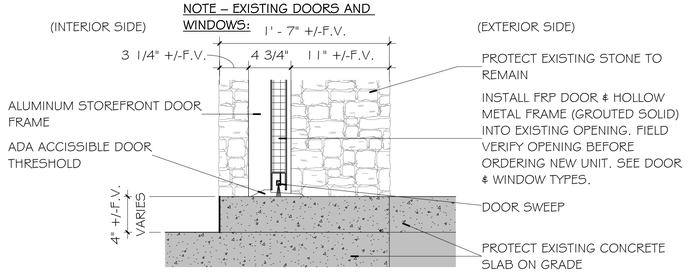

6 A9.2 BOILER ROOM DOOR EXD-210 SILL
1 1/2" = 1'-0" REF: 1/A8.2

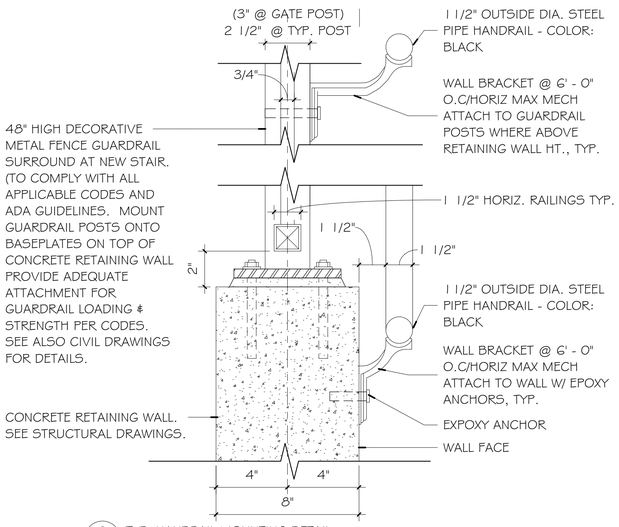

9 A9.2 TYP. HANDRAIL MOUNTING DETAIL
3" = 1'-0"

3 A9.2 DOOR JAMB DETAIL 2 @ CORRIDOR
1 1/2" = 1'-0" REF: 1/A3.1

IMPORTANT NOTE:
INTERIOR FACE OF NEW STOREFRONT FRAME TO BE SET AT INTERIOR FACE OF EXISTING STEEL STOREFRONT FRAME. (THEREFORE THE EXTRA 1" WIDTH OF FRAME IS TO EXPAND OUTWARD TOWARD THE EXTERIOR SIDE OF THE BUILDING.) (INTERIOR FACE OF STOREFRONT FRAME TO BE SET 4" FROM INTERIOR FACE OF MASONRY WALL.)

SEE SELECTIVE DEMOLITION NOTE – EXISTING DOORS AND WINDOWS:

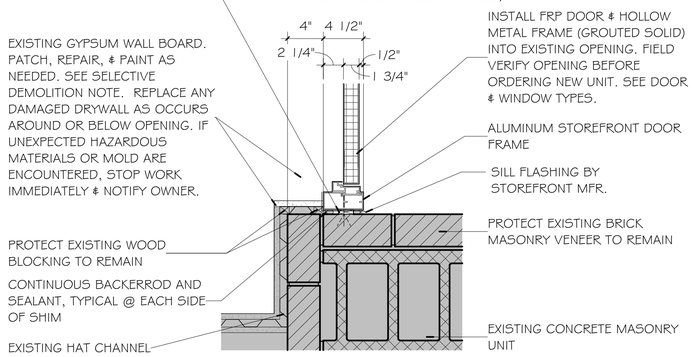

2 A9.2 DOOR JAMB DETAIL 1 @ CORRIDOR
1 1/2" = 1'-0" REF: 1/A3.1

SELECTIVE DEMOLITION NOTE – EXISTING DOORS AND WINDOWS:

REMOVE EXISTING DOOR AND WINDOW ASSEMBLIES WITH CARE AND PRECISION. PERFORM DEMOLITION IN A CONTROLLED MANNER TO PRESERVE ADJACENT CONSTRUCTION. PROTECT ALL SURFACES AROUND THE OPENING. PREVENT DAMAGE TO EXISTING MASONRY AND MAINTAIN THE INTEGRITY OF SURROUNDING MATERIALS. LIMIT DEMOLITION OF ADJACENT METAL STUD FRAMING, GYPSUM BOARD, FINISHES, AND OTHER WALL SURFACING TO A MAXIMUM OF 6 INCHES BEYOND THE PERIMETER OF THE EXISTING OPENING. REPAIR OR REPLACE ONLY THOSE MATERIALS NECESSARY TO FACILITATE INSTALLATION OF THE NEW ASSEMBLY AND RESTORE ADJACENT CONSTRUCTION TO MATCH EXISTING CONDITIONS. PAINTING OF REPAIRED WALL SHALL EXTEND TO NEAREST CORNER. CONTRACTOR RESPONSIBLE FOR REPAIRING ALL WALLS/CEILINGS/FLOORS BEYOND LIMITS ALLOWED. CONTRACTOR TO NOTIFY OWNER/ARCHITECT IMMEDIATELY IF UNFORESEEN CONDITIONS ARE UNCOVERED.

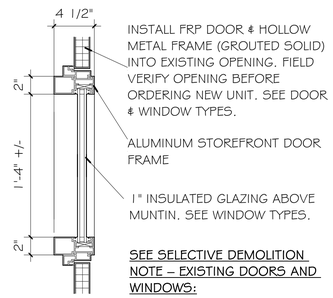

8 A9.2 DOOR JAMB DETAIL @ SIDELITE
1 1/2" = 1'-0" REF: 3/A5.1

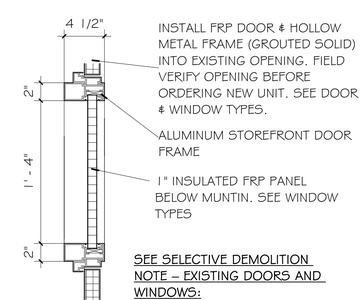

10 A9.2 DOOR JAMB DETAIL @ SIDELITE LOWER PANEL
1 1/2" = 1'-0" REF: 1/A3.1

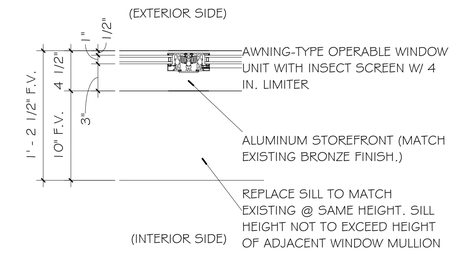

4 A9.2 AWNING WINDOW CENTER
1 1/2" = 1'-0" REF: 2/A5.1

1 A9.2 AWNING WINDOW JAMB (TYPICAL)
1 1/2" = 1'-0" REF: 1/A3.1

bond architects
222 SOUTH CENTRAL AVE.
SUITE# 501
ST. LOUIS, MO 63105
TEL: 314.863.4994
FAX: 314.863.4996
www.bondarchitectsinc.com
Bond Architects, Inc.
Missouri State Certificate of Authority # 2009027409

COLE Design Group
Civil Engineer
Project Number: 26-0052
Certificate of Authority #
401 S. 18th Street, Suite 200
St Louis, MO 63103
314.984.9887 tel

RTM Engineering Consultants
MEP / FP Engineer
Project Number: 26.B00203.1928
Certificate of Authority #2002028690
3701 Lindbergh Blvd.
St Louis, MO 63127
314.725.5889 tel

CASE Engineering
STRUCTURAL Engineer
Project Number: BDA-MO-05-26
Certificate of Authority #001498
796 Merus Ct.
Fenton, MO 63026
636.349.1600 tel

Barretts Elementary School
1780 CARMAN RD., MANCHESTER, MO 63021
Parkway Project #: PN0125018
BUILDING RENOVATION & SITE IMPROVEMENTS

Parkway School District
363 N. Woods Mill Rd.
Chesterfield, MO 63017
314.415.8231 tel

Project No: 26016

Revisions

Description	Date

This drawing and the details on it are the sole property of the architect and may be used for this specific project only. It shall not be loaned, copied or reproduced, in whole or in part, or for any other purpose or project without the written consent of the Architect. Copyright © 2023 by Bond Architects, Inc.

STATE OF MISSOURI
MICHELLE R. WELLS
NUMBER A-2021031961
ARCHITECT
11/12/26

The Professional Architects seal affixed to this sheet applies only to the material and items shown on this sheet. All drawings, instruments or other documents not exhibiting this seal shall not be considered prepared by this architect, and this architect expressly disclaims any and all responsibility for such plan, drawings or documents not exhibiting this seal.

DATE: 11/12/2026

BID/ PERMIT SET

EXTERIOR DETAILS

A9.2

SCALE: 3" = 1'-0" 0 0.25' 0.5' 1'
SCALE: 1 1/2" = 1'-0" 0 0.5' 1' 2'
SCALE: 1" = 1'-0" 0 0.5' 1' 2'
SCALE: 3/4" = 1'-0" 0 1' 2' 3'
SCALE: 1/2" = 1'-0" 0 1' 2' 4'
SCALE: 1/4" = 1'-0" 0 2' 4' 8'
SCALE: 1/8" = 1'-0" 0 4' 8' 16'
SCALE: 1/16" = 1'-0" 0 8' 16' 32'

DOORS AND FRAMES TO BE INSTALLED IN EXISTING OPENINGS. FIELD VERIFY DIMENSIONS PRIOR TO ORDERING AND INSTALLING DOORS.

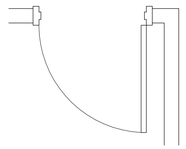

5 TYPICAL DOOR LOCATION
A12.4 1/2" = 1'-0"

GLAZING LEGEND:

	GLASS - 1	VISION GLASS-1" TEMPERED, INSULATED SN68 ON BRONZE REFLECTIVE GLASS TO MATCH EXISTING
	GLASS - 2	VISION GLASS-1" INTRUDER RESISTANT SECURITY GLAZING, TO MEET UL 972, INSULATED SN68 ON BRONZE REFLECTIVE GLASS TO MATCH EXISTING
	FRP-1	1" INSULATED FRP PANEL, COLOR BROWN TO MATCH STOREFRONT, ARCHITECT TO SELECT FROM MANUFACTURER'S FULL RANGE

NOTE: ALUMINUM STOREFRONT SYSTEMS TO ALLOW FOR FUTURE REPLACEMENT OF WINDOW UNITS, DOORS, SIDELIGHTS, TRANSOMS, & FRP PANELS TO BE REMOVED & REPLACED INDEPENDENTLY OF EACH OTHER.

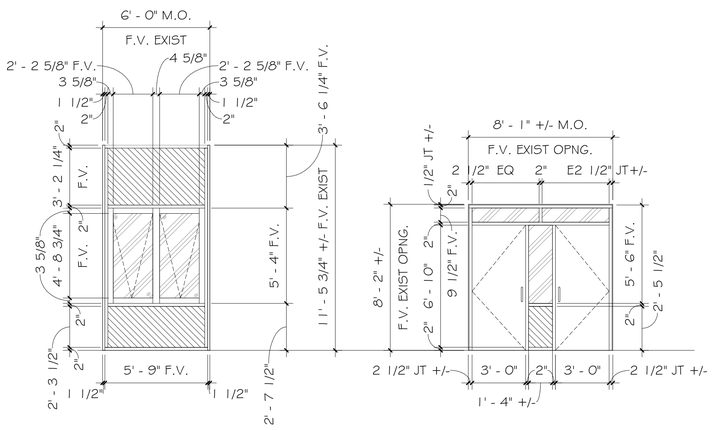

TYPE A

MATERIAL:	ALUMINUM
FINISH:	DARK BRONZE ANODIZED TO MATCH EXISTING
GLAZING:	GLASS-2, SEE GLAZING LEGEND
NOTE:	MANUFACTURER OF DOOR & FRAME SYSTEM TO BE SPECIAL-LITE.

TYPE B

MATERIAL:	ALUMINUM
FINISH:	DARK BRONZE ANODIZED TO MATCH EXISTING
GLAZING:	GLASS-2, SEE GLAZING LEGEND INSULATED FRP PANEL
NOTE:	MANUFACTURER OF DOOR & FRAME SYSTEM TO BE SPECIAL-LITE.

3 WINDOW TYPES
A12.4 1/4" = 1'-0"

TEMPERED GLAZING GENERAL NOTES:

1. GLASS IN ANY DOOR.

2. GLASS IN FIXED OR OPERABLE PANELS ADJACENT TO A DOOR WHERE THE NEAREST EXPOSED EDGE OF THE GLAZING IS WITHIN A 24" ARC OF EITHER VERTICAL EDGE OF THE DOOR IN A CLOSED POSITION AND WHERE THE BOTTOM EDGE OF THE GLAZING IS LESS THAN 60" ABOVE A WALKING SURFACE.

3. GLASS IN FIXED OR OPERABLE PANELS THAT MEETS ALL OF THE FOLLOWING CONDITIONS:
   A. BOTTOM EDGE IS LESS THAN 18" ABOVE FLOOR.
   B. TOP EDGE IS GREATER THAN 36" ABOVE FLOOR.
   C. TOTAL AREA OF GLASS IS GREATER THAN 9 SF.
   D. ONE OR MORE WALKING SURFACES WITHIN 36" HORIZONTALLY OF THE GLAZING.

4. GLASS IN WALLS ENCLOSING STAIRWAY LANDINGS OR WITHIN 5 FEET OF THE BOTTOM AND TOP OF STAIRWAYS WHERE THE BOTTOM EDGE OF THE GLASS IS LESS THAN 60" ABOVE A WALKING SURFACE.

5. MINIMUM GLASS THICKNESSES TO MEET GANA PUBLICATION: "LAMINATED GLAZING REFERENCE MANUAL" AND "GLAZING MANUAL" AND IGMA PUBLICATION FOR INSULATING GLASS: SIGMA TM-3000, "NORTH AMERICAN GLAZING GUIDELINES FOR SEALED INSULATING GLASS UNITS FOR COMMERCIAL AND RESIDENTIAL USE."

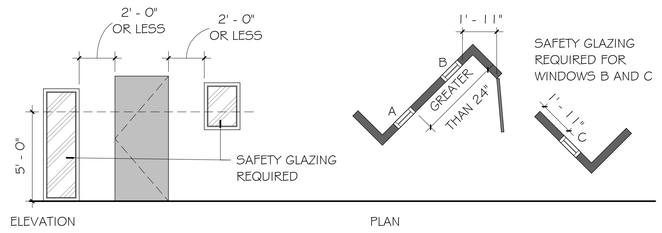

4 TYPICAL TEMPERED GLAZING LOCATION
A12.4 1/4" = 1'-0"

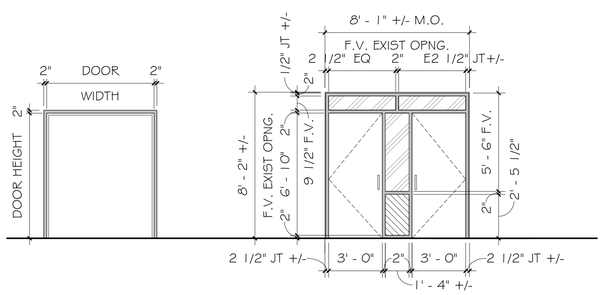

TYPE HM-A
TYPE: SINGLE RABBET
MATERIAL: HOLLOW METAL
FINISH: PAINT DARK BRONZE TO MATCH EXISTING

TYPE ALUM-B
TYPE: DOUBLE RABBET
MATERIAL: ALUMINUM
FINISH: DARK BRONZE ANODIZED TO MATCH EXISTING
GLAZING: GLASS 2 INSULATED FRP PANEL

GENERAL NOTES:
1. REFER TO ELECTRICAL DRAWINGS FOR WIRING DIAGRAMS ON ELECTRIFIED DOORS.
2. CONTRACTOR TO VERIFY DIMENSIONS OF EXISTING OPENINGS AT LOCATIONS WHERE NEW FRAMES WILL BE INSTALLED.
3. MINIMUM GLASS THICKNESSES TO MEET GANA PUBLICATION: "LAMINATED GLAZING REFERENCE MANUAL" AND "GLAZING MANUAL" AND IGMA PUBLICATION FOR INSULATING GLASS: SIGMA TM-3000, "NORTH AMERICAN GLAZING GUIDELINES FOR SEALED INSULATING GLASS UNITS FOR COMMERCIAL AND RESIDENTIAL USE."
4. MANUFACTURER OF DOOR & FRAME SYSTEM TO BE SPECIAL-LITE.

2 FRAME TYPES
A12.4 1/4" = 1'-0"

Door Schedule

Mark	Width	Height	Door Type	Frame Type	Fire Rating	Door Decal Number	Hardware Group	Comments
EXD-210	5' - 4"	7' - 0"	FRP-2	HM-A		7	1	GROUT FRAME SOLID
EXD-C1WA	3' - 0"	7' - 0"	FRP-1	ALUM-B		23	2	
EXD-C1WB	3' - 0"	7' - 0"	FRP-1	ALUM-B		23	2	
EXD-C1XA	2' - 10"	7' - 0"	FRP-1	ALUM-B		20	2	ALTERNATE #1
EXD-C1XB	2' - 10"	7' - 0"	FRP-1	ALUM-B		20	2	ALTERNATE #1

DOOR SCHEDULE NOTES: REFER TO SPECIFICATIONS FOR HARDWARE GROUPS.

DOOR GENERAL NOTES:

1. COORDINATE AND PROVIDE HARDWARE AS DETAILED IN THE SPECIFICATIONS OR, IF NOT SPECIFIED, PROVIDE HARDWARE (OF EQUAL QUALITY TO THAT SPECIFIED, AND MOST SIMILAR IN FUNCTION TO TYPE OF DOOR) REQUIRED FOR DOORS TO OPERATE AND APPEAR AS INTENDED ON DRAWINGS.
2. IF CONFLICT EXISTS BETWEEN DOOR RATING AS SCHEDULED AND WALL/PARTITION TYPE FIRE RATING AS SHOWN ON PLANS, PROVIDE DOOR(S) WITH THE GREATER FIRE RATING OF THE TWO.
3. VERIFY ALL DIMENSIONS AND CLEARANCES, AND COORDINATE UNDERCUTTING REQUIRED TO CLEAR ADJACENT FLOOR MATERIALS.
4. IF A DISCREPANCY EXISTS BETWEEN THE DOOR SCHEDULE REMARKS AND THE HARDWARE SCHEDULE IN THE SPECIFICATIONS, PROVIDE THE HARDWARE NEEDED TO MEET THE MORE STRINGENT OF THE REQUIREMENTS.

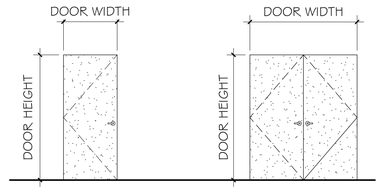

TYPE FRP-1
TYPE: SWING
MATERIAL: FIBERGLASS REINFORCED PLASTIC
FINISH: BROWN TO MATCH DARK ANODIZED STOREFRONT
GLAZING: NONE

TYPE FRP-2
TYPE: SWING
MATERIAL: FIBERGLASS REINFORCED PLASTIC
FINISH: BROWN TO MATCH DARK ANODIZED STOREFRONT
GLAZING: NONE

GENERAL NOTES:
1. MINIMUM GLASS THICKNESSES TO MEET GANA PUBLICATION: "LAMINATED GLAZING REFERENCE MANUAL" & "GLAZING MANUAL" AND IGMA PUBLICATION FOR INSULATING GLASS: SIGMA TM-3000, "NORTH AMERICAN GLAZING GUIDELINES FOR SEALED INSULATING GLASS UNITS FOR COMMERCIAL AND RESIDENTIAL USE."
2. MANUFACTURER OF DOOR & FRAME SYSTEM TO BE SPECIAL-LITE.

1 DOOR TYPES
A12.4 1/4" = 1'-0"

bond architects
222 SOUTH CENTRAL AVE.
SUITE# 501
ST. LOUIS, MO 63105
TEL: 314.863.4994
FAX: 314.863.4996
www.bondarchitectsinc.com
Bond Architects, Inc.
Missouri State Certificate of Authority # 2009027409

COLE Design Group
Civil Engineer
Project Number: 26-0052
Certificate of Authority #
401 S. 18th Street, Suite 200
St Louis, MO 63103
314.984.9887 tel

RTM Engineering Consultants
MEP / FP Engineer
Project Number: 26.B00203.1928
Certificate of Authority #2002028690
3701 Lindbergh Blvd.
St Louis, MO 63127
314.725.5889 tel

CASE Engineering
STRUCTURAL Engineer
Project Number: BDA-MO-05-26
Certificate of Authority #001498
796 Merus Ct.
Fenton, MO 63026
636.349.1600 tel

Barretts Elementary School
1780 CARMAN RD., MANCHESTER, MO 63021
Parkway Project #: PN012501B
BUILDING RENOVATION & SITE IMPROVEMENTS

Parkway School District
363 N. Woods Mill Rd.
Chesterfield, MO 63017
314.415.6231 tel

Project No: 26016

Revisions

Description	Date

This drawing and the details on it are the sole property of the architect and may be used for this specific project only. It shall not be loaned, copied or reproduced, in whole or in part, or for any other purpose or project without the written consent of the Architect.
Copyright © 2023 by Bond Architects, Inc.

STATE OF MISSOURI
MICHELLE R. WELLS
NUMBER A-2021031961
ARCHITECT
11/12/26

The Professional Architects seal affixed to this sheet applies only to the material and items shown on this sheet. All drawings, instruments or other documents not exhibiting this seal shall not be considered prepared by this architect, and this architect expressly disclaims any and all responsibility for such plan, drawings or documents not exhibiting this seal.

DATE: 11/12/2026

BID/ PERMIT SET

DOOR & WINDOW TYPES

A12.4

11/5/2026 5:09:28 PM

Save

FINISH MATERIAL SCHEDULE

FINISH MARK	PRODUCT TYPE	FINISH MANUFACTURER	STYLE	SIZE	COLOR	FINISH	NOTES
TS-4	TRANSITION STRIP	JOHNSONITE	REDUCER STRIP	SEE DRAWINGS	40 BLACK	---	---
WB-1	WALL BASE	TO MATCH EXISTING	COVE BASE	TO MATCH EXISTING	TO MATCH EXISTING	---	---
WCPT-1	WALK OFF CARPET	TARKETT	ABRASIVE ACTION	24" X 24"	WINTER GRAY	---	INSTALL:MONOLITHIC

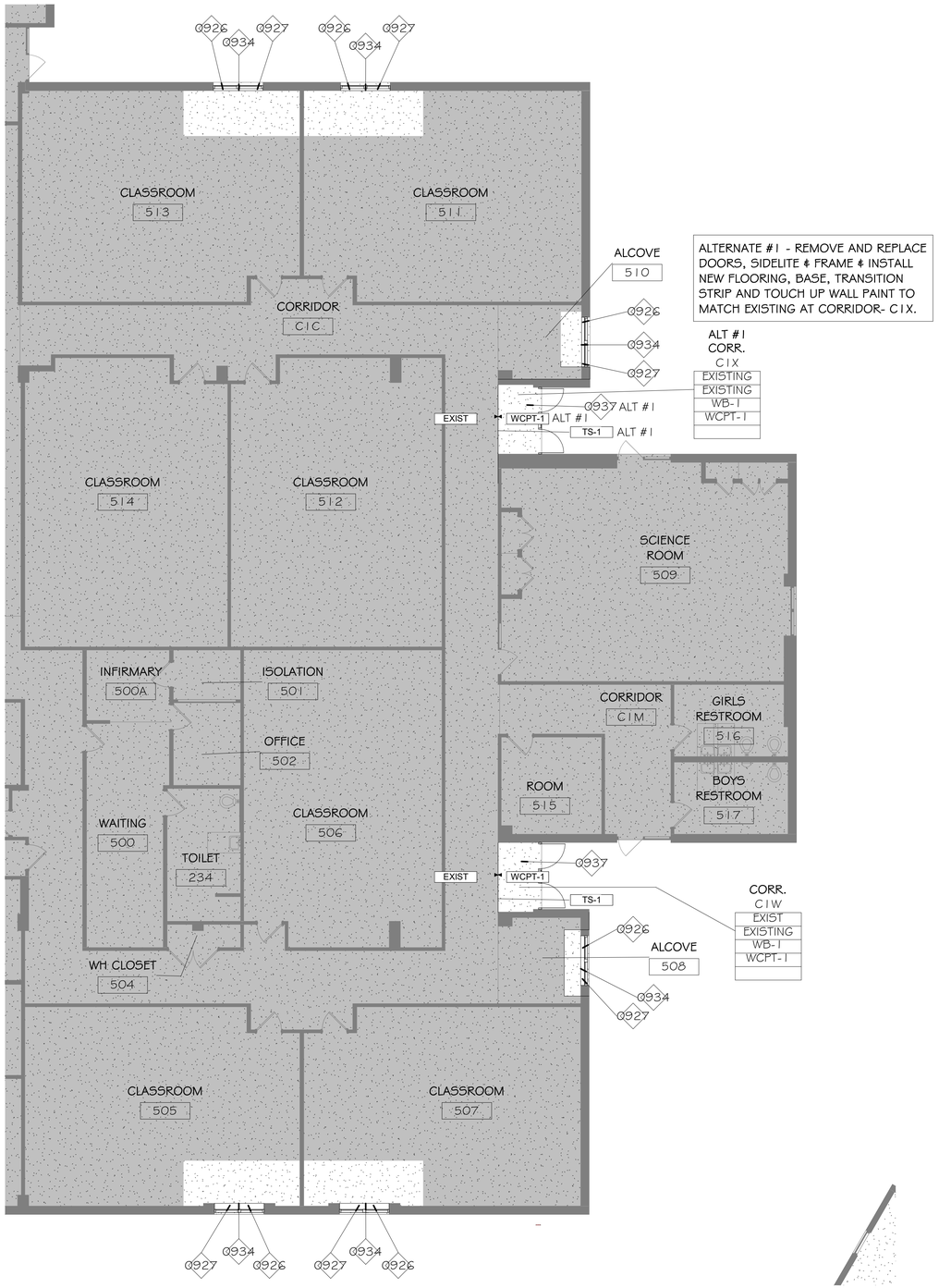

ALTERNATE #1 - REMOVE AND REPLACE DOORS, SIDELITE & FRAME & INSTALL NEW FLOORING, BASE, TRANSITION STRIP AND TOUCH UP WALL PAINT TO MATCH EXISTING AT CORRIDOR- C1X.

1 A13.1 LEVEL 1 ENLARGED FINISH PLAN
1/8" = 1'-0"

Keynote Legend	
Key Value	Keynote Text

0926	INSTALL NEW INTERIOR PLAM WINDOW SILL TO MATCH EXISTING SILL IN EXISTING OPENING.
0927	REINSTALL SALVAGED BLINDS IN ORIGINAL LOCATIONS.
0934	REPLACE DAMAGED DRYWALL BELOW OR AROUND WINDOW OPENING. PAINT TO MATCH EXISTING AS REQUIRED. IF UNEXPECTED MOLD OR HAZARDOUS MATERIALS ARE ENCOUNTERED, STOP WORK IMMEDIATELY & NOTIFY OWNER.
0937	TOUCH UP PAINT AS REQUIRED. FEATHER OUT TO MEET EXISTING PAINT. PAINT TO MATCH EXISTING

bond architects
222 SOUTH CENTRAL AVE.
SUITE# 501
ST. LOUIS, MO 63105
TEL: 314.863.4994
FAX: 314.863.4996
www.bondarchitectsinc.com
Bond Architects, Inc.
Missouri State Certificate of Authority # 2009027409

COLE Design Group
Civil Engineer
Project Number: 26-0052
Certificate of Authority #
401 S. 18th Street, Suite 200
St Louis, MO 63103
314.984.9887 tel

RTM Engineering Consultants
MEP / FP Engineer
Project Number: 26.B00203.1928
Certificate of Authority #2002028690
3701 Lindbergh Blvd.
St Louis, MO 63127
314.725.5889 tel

CASE Engineering
STRUCTURAL Engineer
Project Number: BDA-MO-05-26
Certificate of Authority #001498
796 Merus Ct.
Fenton, MO 63026
636.349.1600 tel

Barretts Elementary School
1780 CARMAN RD., MANCHESTER, MO 63021
Parkway Project #: PN012501B
BUILDING RENOVATION & SITE IMPROVEMENTS
Parkway School District
363 N. Woods Mill Rd.
Chesterfield, MO 63017
314.415.8231 tel

Project No: 26016

Revisions

Description	Date

This drawing and the details on it are the sole property of the architect and may be used for this specific project only. It shall not be loaned, copied or reproduced, in whole or in part, or for any other purpose or project without the written consent of the Architect. Copyright © 2023 by Bond Architects, Inc.

STATE OF MISSOURI
MICHELLE R. WELLS
NUMBER A-2021031961
ARCHITECT
11/12/26

The Professional Architects seal affixed to this sheet applies only to the material and items shown on this sheet. All drawings, instruments or other documents not exhibiting this seal shall not be considered prepared by this architect, and this architect expressly disclaims any and all responsibility for such plan, drawings or documents not exhibiting this seal.

DATE: 11/12/2026

BID/ PERMIT SET

FINISH PLAN & LEGEND

A13.1

11/5/2026 5:09:29 PM

SCALE: 3" = 1'-0" 0 0.25' 0.5' 1'
SCALE: 1 1/2" = 1'-0" 0 0.5' 1' 2'
SCALE: 1" = 1'-0" 0 0.5' 1' 2'
SCALE: 3/4" = 1'-0" 0 1' 2' 3'
SCALE: 1/2" = 1'-0" 0 1' 2' 4'
SCALE: 1/4" = 1'-0" 0 2' 4' 8'
SCALE: 1/8" = 1'-0" 0 4' 8' 16'
SCALE: 1/16" = 1'-0" 0 8' 16' 32'

GENERAL SIGNAGE NOTES

A. ALL LABELED ROOMS TO RECEIVE SIGN OUTSIDE EACH POINT OF ENTRY, U.N.O.

B. APCO SIGNS, FULL VIEW SERIES, AS BASIS OF DESIGN. SUBSTITUTIONS TO BE APPROVED BY ARCHITECT.

C. ALL SIGNAGE TO COMPLY WITH APPLICABLE REGULATIONS, INCLUDING THE AMERICANS WITH DISABILITIES ACT AND ICC 500

D. ROOM NUMBERING TO BE VERIFIED WITH OWNER AND ARCHITECT PRIOR TO ORDERING.

E. INSTALL SIGN TYPE K1 AND K2 AT ALL EXTERIOR DOORS.

F. REFERENCE SPEC SECTION FOR ALL OTHER SIGNAGE TYPES AND REQUIREMENTS

G. SEE FLOOR PLANS FOR REQUIRED SHELTER SIGNAGE LOCATIONS.

SIGNAGE SCHEDULE

NUMBER	NAME	SIGN TYPE	TOTAL QUANTITY	SIGN TYPES J1 & J2 DECAL TEXT	SIGN TYPE K DECAL TEXT	SIGNAGE BACKGROUND COLOR J & K	SIGNAGE COMMENTS
210	BOILER ROOM	J2, K3, K4	J2(1), K3(1), K4(1)	210	7	GREEN	DOOR
505	CLASSROOM	J1	J1(1)	505		PURPLE	WINDOW
507	CLASSROOM	J1	J1(1)	507		PURPLE	WINDOW
508	ALCOVE	J1	J1(1)	508		PURPLE	WINDOW
510	ALCOVE	J1	J1(1)	510		PURPLE	WINDOW
511	CLASSROOM	J1	J1(1)	511		PURPLE	WINDOW
513	CLASSROOM	J1	J1(1)	513		PURPLE	WINDOW
C1W	CORRIDOR	K1, K2	K1(1), K2(1)		23	PURPLE	DOOR
C1X	CORRIDOR	K1, K2	K1(1), K2(1)		20	PURPLE	DOOR, ALTERNATE #1

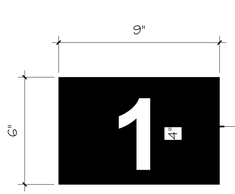

K4

LETTERING LOCATED AT EXTERIOR DOORS TO BE APPLIED TO INTERIOR DOOR SURFACE. BACKGROUND COLOR TO MATCH ZONE COLOR PER DRAWINGS. SEE SIGNAGE SCHEDULE.

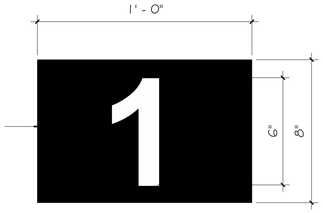

K3

LETTERING LOCATED AT EXTERIOR DOORS TO BE APPLIED AT CENTER TOP OF EXTERIOR DOOR SURFACE. LOCATE BETWEEN 1/2 AND 3/4 OF DOOR HEIGHT ADJACENT TO ALL OVERHEAD AND COILING DOORS. BACKGROUND COLOR TO MATCH ZONE COLOR PER DRAWINGS. SEE SIGNAGE SCHEDULE

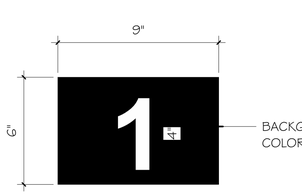

K2

HIGH REFLECTIVE LETTERING LOCATED AT EXTERIOR DOORS AT CORRIDORS TO BE APPLIED TO INTERIOR DOOR SURFACE. BACKGROUND COLOR TO MATCH ZONE COLOR PER DRAWINGS. SEE SIGNAGE SCHEDULE.

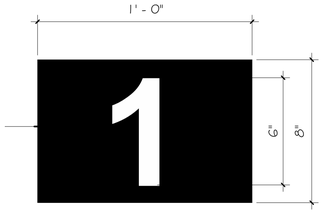

K1

HIGH REFLECTIVE LETTERING LOCATED AT EXTERIOR DOORS AT CORRIDORS TO BE APPLIED AT CENTER TOP OF EXTERIOR DOOR SURFACE. LOCATE BETWEEN 1/2 AND 3/4 OF DOOR HEIGHT ADJACENT TO ALL OVERHEAD AND COILING DOORS. BACKGROUND COLOR TO MATCH ZONE COLOR PER DRAWINGS. SEE SIGNAGE SCHEDULE.

TYPE K1-K4

EXTERIOR DOOR SIGNS
MATERIAL: ALUM-CLAD FOAM PVC
FINISH: UV CURED INK
MOUNTING: TAPE ADHESIVE
K1 & K3 COPY: ARIAL 6"
K2 & K4 COPY: ARIAL 4"
COPY COLOR: WHITE
BACKGROUND COLOR: TO MATCH ZONE COLOR PER SIGNAGE SCHEDULE

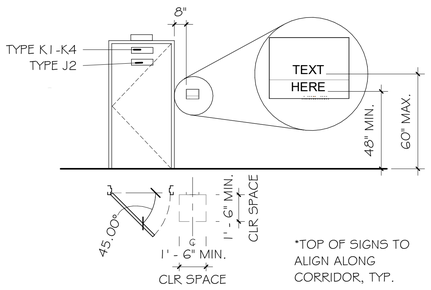

3 A15.0 SIGNAGE MOUNTING HEIGHTS
NOT TO SCALE

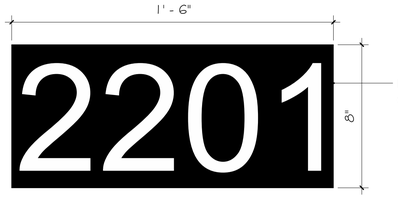

TYPE J2

EXTERIOR DOOR SIGN
MATERIAL: ALUM-CLAD FOAM PVC
FINISH: UV CURED INK
MOUNTING: TAPE ADHESIVE
COPY: ARIAL 6"
COPY COLOR: WHITE
LOCATED AT EXTERIOR DOORS TO BE APPLIED DIRECTLY BELOW SIGN TYPE K1 AND/OR K3, ON EXTERIOR DOOR SURFACE.
BACKGROUND COLOR: TO MATCH ZONE COLOR PER SIGNAGE SCHEDULE.

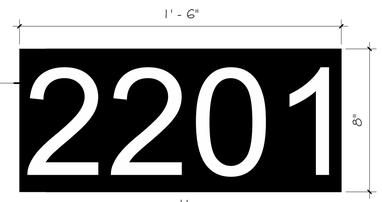

J1

TYPE J1

EXTERIOR WINDOW SIGN
MATERIAL: ALUM-CLAD FOAM PVC
FINISH: UV CURED INK
MOUNTING: TAPE ADHESIVE
COPY: ARIAL 6"
COPY COLOR: WHITE
LOCATION: MOUNTED TO THE LEFT-MOST WINDOW OF ROOM WHEN FACING FROM EXTERIOR.
BACKGROUND COLOR: TO MATCH ZONE COLOR PER SIGNAGE SCHEDULE

bond architects
222 SOUTH CENTRAL AVE.
SUITE# 501
ST. LOUIS, MO 63105
TEL: 314.863.4994
FAX: 314.863.4996
www.bondarchitectsinc.com
Bond Architects, Inc.
Missouri State Certificate of Authority # 2009027409

COLE Design Group
Civil Engineer
Project Number: 26-0052
Certificate of Authority #
401 S. 18th Street, Suite 200
St Louis, MO 63103
314.984.9887 tel

RTM Engineering Consultants
MEP / FP Engineer
Project Number: 26.B00203.1928
Certificate of Authority #2002028690
3701 Lindbergh Blvd.
St Louis, MO 63127
314.725.5889 tel

CASE Engineering
STRUCTURAL Engineer
Project Number: BDA-MO-05-26
Certificate of Authority #001498
796 Merus Ct.
Fenton, MO 63026
636.349.1600 tel

Barretts Elementary School
1780 CARMAN RD., MANCHESTER, MO 63021
Parkway Project #: PN012501B
BUILDING RENOVATION & SITE IMPROVEMENTS
Parkway School District
363 N. Woods Mill Rd.
Chesterfield, MO 63017
314.415.8231 tel

Project No: 26016

Revisions

Description	Date

This drawing and the details on it are the sole property of the architect and may be used for this specific project only. It shall not be loaned, copied or reproduced, in whole or in part, or for any other purpose or project without the written consent of the Architect.
Copyright © 2023 by Bond Architects, Inc.

STATE OF MISSOURI
MICHELLE R. WELLS
NUMBER A-2021031961
ARCHITECT
11/12/26

The Professional Architects seal affixed to this sheet applies only to the material and items shown on this sheet. All drawings, instruments or other documents not exhibiting this seal shall not be considered prepared by this architect, and this architect expressly disclaims any and all responsibility for such plan, drawings or documents not exhibiting this seal.

DATE: 11/12/2026

BID/ PERMIT SET

SIGNAGE TYPES & ELEVATIONS

A15.0

11/5/2026 5:09:29 PM

STRUCTURAL ABBREVIATIONS

#	POUND(S), NUMBER
&	AND
(E)	EXISTING
@	AT
AB	ANCHOR BOLT (S)
ADDL	ADDITIONAL
ALT	ALTERNATE
ARCH	ARCHITECT(URAL)
B/FTG	BOTTOM OF FOOTING
BLDG	BUILDING
BLKG	BLOCKING
BM	BEAM
BMD	BOTTOM OF METAL DECK
BN	BOUNDARY NAIL
BOT	BOTTOM
BP	BASE PLATE
BRG	BEARING
BS	BOUNDARY SCREW
BTWN	BETWEEN
CANT	CANTILEVER(ED)
CFS	COLD-FORMED STEEL
CIP	CAST-IN-PLACE
CJ	CONTROL OR CONST JOINT
CL	CENTER LINE
CLR	CLEAR
CMU	CONCRETE MASONRY UNIT
COL	COLUMN
CONC	CONCRETE
CONN	CONNECTION
CONST	CONSTRUCTION
CONT	CONTINUOUS
CTR	CENTER
DBL	DOUBLE
DC	DEMAND CRITICAL (WELD)
deg	DEGREE
DET	DETAIL(S)
DF	DOUGLAS FIR
DFL	DOUGLAS FIR LARCH
dia	DIAMETER
DIM	DIMENSION
DWG	DRAWING
DWL	DOWEL
EA	EACH
EE	EACH END
EF	EACH FACE
EL	ELEVATION
ELEV	ELEVATOR
EMB	EMBEDMENT
EN	EDGE NAIL
EOJ	END OF JOIST
EOR	ENGINEER OF RECORD
EOS	EDGE OF SLAB
EQ	EQUAL
ES	EDGE SCREW
ETC	ET CETERA
EW	EACH WAY
EXP	EXPANSION
EXT	EXTERIOR
FDN	FOUNDATION
FF	FINISH FLOOR
FIN FLR	FINISH FLOOR
FLR	FLOOR
FN	FIELD NAILING
FRMG	FRAMING
FRT	FIRE-RETARDENT TREATED
FS	FAR SIDE
FS	FIELD SCREW
FTG	FOOTING
FV	FIELD VERIFY
ga	GAUGE
GALV	GALVANIZE(D)
GLB	GLULAM BEAM
HDR	HEADER
HGR	HANGER

STRUCTURAL ABBREVIATIONS

HK	HOOK
HORIZ	HORIZONTAL
HSS	HOLLOW STRUCTURAL SECTION
INT	INTERIOR
ISF	INSIDE FACE
J/BRG	JOIST BEARING
JG	JOIST GIRDER
JG/BRG	JOIST GIRDER BEARING
JST	JOIST
JT	JOINT
kip	1,000 POUNDS
ksi	kips PER SQUARE INCH
LB	POUND
LG	LONG
LLH	LONG LEG HORIZONTAL
LLV	LONG LEG VERTICAL
MAX	MAXIMUM
MECH	MECHANICAL
MEZZ	MEZZANINE
MFR	MANUFACTURER
MIN	MINIMUM
MISC	MISCELLANEOUS
MTL	METAL
NIC	NOT IN CONTRACT
NS	NEAR SIDE
NTS	NOT TO SCALE
oc	ON CENTER
OH	OPPOSITE HAND
OPNG	OPENING
OSF	OUTSIDE FACE
PAF	POWER-ACTUATED FASTENER
PARA	PARAPET
PEMB	PRE-ENGINEERED METAL BUILDING (MANUFACTURER)
PIL	PILASTER
PL	PLATE
PLBG	PLUMBING
PLYWD	PLYWOOD
psf	POUNDS PER SQUARE FOOT
psi	POUNDS PER SQUARE INCH
PT	PRESSURE TREATED
QT	QUANTITY
REINF	REINFORCED, REINFORCING
REQD	REQUIRED
RTU	ROOF TOP UNIT
SCHED	SCHEDULE
SD	SNOW DRIFT
SHTG	SHEATHING
SIM	SIMILAR
SL	SNOW LOAD
SOG	SLAB ON GRADE
SPF	SPRUCE PINE FIR
STD	STANDARD
STL	STEEL
STRUC	STRUCTURAL
SYP	SOUTHERN YELLOW PINE
T&B	TOP AND BOTTOM
T&G	TONGUE AND GROOVE
T/BRG	TRUSS BEARING
T/CONC	TOP OF CONCRETE
T/FTG	TOP OF FOOTING
T/PARA	TOP OF PARAPET
T/PIL	TOP OF PILASTER
T/STL	TOP OF STEEL
TYP	TYPICAL
UNO	UNLESS NOTED OTHERWISE
USGS	US GEOLOGICAL SURVEY
VAR	VARIES
VERT	VERTICAL
w/	WITH
WHS	WELDED HEADED STUD(S)
WP	WORK POINT
WWR	WELDED WIRE REINFORCEMENT

BUILDING CODES AND STANDARDS USED FOR DESIGN

1. INTERNATIONAL BUILDING CODE 2015 EDITION
   ASCE 7-10
   RISK CATEGORY: II

DESIGN LOADS

1. SNOW LOAD DESIGN CRITERIA
   MINIMUM FROST DEPTH: 2'-6"
2. SEISMIC LOAD DESIGN CRITERIA
   IMPORTANCE FACTOR, I: 1.0
   SITE CLASS: D
   SPECTRAL RESPONSE ACCELERATIONS: Ss=0.377g, S1=0.153g
   Sds=0.377g, Sd1=0.223g
   SEISMIC DESIGN CATEGORY: D

GENERAL STRUCTURAL NOTES

1. THIS DRAWING SET IS TO BE VIEWED AS A WHOLE AND COORDINATED WITH ARCHITECTURAL, MECHANICAL, CIVIL, AND OTHER DISCIPLINES. ALL WORK PERTAINING TO A SPECIFIC CONTRACTOR MAY OR MAY NOT BE SHOWN ON SPECIFIC DRAWING SECTIONS. IT IS EACH SUBCONTRACTOR'S RESPONSIBILITY TO PREPARE HIS BID FROM A COMPLETE SET OF PLANS.
2. THE CONTRACTOR SHALL FOLLOW WRITTEN DIMENSIONS ONLY. DO NOT SCALE DRAWINGS. DIMENSIONS NOT SHOWN ON PLAN TO BE COORDINATED WITH ARCHITECTURAL PLANS.
3. ALL DETAILS AND SECTIONS SHOWN ON THE DRAWINGS ARE INTENDED TO BE TYPICAL AND SHALL APPLY AT ANY SIMILAR SITUATION ELSEWHERE ON THE JOB, EXCEPT WHERE A DIFFERENT DETAIL OR SECTION IS SHOWN.
4. THE STRUCTURE SHALL BE ADEQUATELY BRACED AND SHORED DURING ERECTION AGAINST WIND AND ERECTION LOADS. STRUCTURAL MEMBERS ARE DESIGNED FOR "IN-PLACE" LOADS ONLY.
5. BRACE ALL BELOW GRADE WALLS UNTIL FLOOR STRUCTURE IS IN PLACE & CONCRETE OR PLYWOOD FLOOR DIAPHRAGM IS IN PLACE. UNBRACED WALLS SHALL NOT BE BACKFILLED MORE THAN 1/3 WALL HEIGHT UNTIL SOG, FLOOR FRAMING, AND DIAPHRAGM ARE IN PLACE.
6. THE GENERAL CONTRACTOR SHALL COORDINATE ALL OPENING SIZES, PAD SIZES, AND LOCATIONS WITH THE RESPECTIVE CONTRACTORS.
7. THE CONTRACTOR SHALL NOTIFY THE ARCHITECT AND ENGINEER IMMEDIATELY OF ANY DISCREPANCIES BETWEEN CONSTRUCTION DOCUMENTS AND ACTUAL FIELD CONDITIONS.
8. THE VARIOUS SUBCONTRACTORS ARE RESPONSIBLE FOR PLACING SLEEVES, OUTLET BOXES, ANCHORS, VENT OPENINGS, ETC. THAT MAY BE REQUIRED IN FOUNDATION WALLS. CONSTRUCTION MANAGER SHALL COORDINATE ALL PLACEMENT OF ITEMS IN FOUNDATION WALLS.
9. SEE ARCHITECTURAL PLANS FOR ADDITIONAL DETAILS AND INFORMATION.
10. ALL ELEVATIONS GIVEN ARE REFERENCED TO FINISHED FLOOR ELEVATIONS AT 100'-0" OR 0'-0", UNLESS SHOWN AS USGS ELEVATIONS.
11. WHERE GENERAL NOTES OR TYPICAL DETAILS CONTRADICT INFORMATION PROVIDED IN BUILDING SECTIONS, THE BUILDING SECTIONS TAKE PRECEDENCE.
12. ALL HOLES THROUGH CONSTRUCTION SHALL BE CORE DRILLED OR SAWCUT.
13. ALL STAIR STRINGERS, LANDINGS, AND HANDRAILS TO BE DESIGNED AND FABRICATED BY STAIR FABRICATOR.
14. WHERE INFORMATION PROVIDED IN THESE STRUCTURAL DRAWINGS CONTRADICTS INFORMATION PROVIDED IN PROJECT SPECIFICATIONS, THE SPECIFICATIONS SHALL TAKE PRECEDENCE.
15. FOR ARCHITECTURAL, MEP, & STRUCTURAL COORDINATION: MODELED ELEMENTS SHOWN ON STRUCTURAL DRAWINGS SUCH AS TRUSSES, OPEN-WEB JOISTS, AND JOIST GIRDERS, ARE NOT THE FINAL CONFIGURATION. ALL COORDINATION SHALL BE PERFORMED BETWEEN THE VARIOUS TRADES AND THE SUPPLIERS OF THESE ELEMENTS FOR THE STRUCTURE, NOT WITH THE STRUCTURAL MODEL.
16. THIS DRAWING SET IS TO BE VIEWED AS A WHOLE, ALL TYPICAL DETAILS AND GENERAL NOTES SHOWN IN THESE DRAWINGS ARE APPLICABLE TO THE PROJECT EVEN IF THEY ARE NOT SHOWN ON PLANS OR SECTIONS.
17. DESIRED ALTERATIONS TO ANY DETAIL, MEMBER SIZE, MEMBER TYPE, OR ANY OTHER STRUCTURAL COMPONENT SHOWN ON THE DRAWINGS, SHALL BE SUBMITTED AS A REQUEST IN WRITING TO CASE ENGINEERING. CASE ENGINEERING WILL NOT BE RESPONSIBLE FOR CHANGES TO THE DESIGN OR DETAILS MADE DURING SHOP DRAWINGS DEVELOPMENT, DURING CONSTRUCTION, OR AT ANY OTHER TIME WITHOUT WRITTEN CONSENT.

EXISTING CONSTRUCTION NOTES

1. ALL DIMENSIONS AND ELEVATIONS TO EXISTING CONSTRUCTION ARE FOR REFERENCE ONLY. FIELD VERIFY DIMENSIONS AND ELEVATIONS PRIOR TO PREPARING SHOP DRAWINGS, FABRICATING MEMBERS (STRUCTURAL ITEMS), AND INSTALLATION.
2. ALL HOLES THROUGH EXISTING CONSTRUCTION SHALL BE CORE-DRILLED OR SAWCUT. DO NOT CUT ANY REINFORCING STEEL WHILE DRILLING INTO EXISTING CONCRETE. DO NOT TORCH CUT.
3. PRIOR TO SUBMITTING ANY SHOP DRAWINGS, DIMENSIONS BETWEEN NEW CONSTRUCTION AND EXISTING CONSTRUCTION SHALL BE SURVEYED BY THE GC AND PROVIDED TO THE SHOP DRAWING DETAILERS.
4. NOTIFY CASE ENGINEERING IMMEDIATELY OF ANY DISCREPANCIES BETWEEN EXISTING CONDITIONS AND STRUCTURAL DRAWINGS.
5. FOR ALL EXISTING CONSTRUCTION: DUE TO LIMITED OBSERVATION, OR NOT BEING ABLE TO VISIT THE EXISTING BUILDING DURING THE PREPARATION OF THESE DOCUMENTS, CASE ENGINEERING HAS ASSUMED THE EXISTING STRUCTURE IS IN LIKE-NEW CONDITION WITH NO CORROSION, DETERIORATION, OR DAMAGE, AND WAS CONSTRUCTED PER ANY ORIGINAL CONSTRUCTION DOCUMENTS PROVIDED (IF ANY EXIST). CONTRACTOR SHALL VERIFY THESE ASSUMPTIONS TO THE BEST OF THEIR ABILITY AND NOTIFY CASE ENGINEERING OF ANY CONCERNS, ISSUES, OR DISCREPANCIES.
6. CONTRACTOR TO VERIFY TOP OF ROOF SLOPE IS AT LEAST 1/4 INCH PER FOOT AFTER PLACEMENT OF ANY NEW LOADS APPLIED TO ROOF OR HUNG FROM ROOF FRAMING. LOADS FROM NEW OR REPLACED ITEMS MAY INCLUDE, BUT ARE NOT LIMITED TO, ROOF TOP MECHANICAL UNITS (RTU'S) AND ASSOCIATED DUCTWORK, HUNG HOODS, MAKE-UP AIR UNITS, CONDENSERS, COMPRESSORS, EXHAUST FANS, HUNG TRANSFORMERS, ROOFTOP GENERATOR(S), RE-ROOF MATERIALS, NEW CEILINGS, HUNG SIGNAGE, HUNG SPRINKLER PIPING, ETC. ALSO VERIFY THAT ALL ROOF DRAINS AND ANY WALL SCUPPERS ARE CLEAR AND FREE-DRAINING. REPORT RESULTS IN WRITING TO ARCHITECT AND STRUCTURAL ENGINEER AS SOON AS PRACTICAL DURING THE CONSTRUCTION PROCESS.

EXCAVATION AND EARTHWORK NOTES

1. THE NET ALLOWABLE SOIL BEARING VALUE AND LATERAL EARTH PRESSURES USED IN THE FOUNDATION DESIGN IS BASED ON IBC CONSERVATIVE ENGINEERING VALUES:
   - SPREAD FOOTINGS 1,500 psf
   - CONT. WALL FOOTINGS 1,500 psf
   - ACTIVE PRESSURE 60 psf/ft
   - AT-REST PRESSURE 100 psf/ft
   - PASSIVE PRESSURE 100 psf/ft (CONSERVATIVE PER IBC)
   - FRICTION COEFFICIENT 0.25
2. ALL EXCAVATION, FILL, COMPACTION, AND GRADING OF THE SITE SHALL BE COMPLETED PRIOR TO CONSTRUCTING FOUNDATIONS AND SHALL BE IN ACCORDANCE WITH THE RECOMMENDATIONS CONTAINED IN THE PROJECT'S FINAL GEOTECHNICAL REPORT AND OSHA REQUIREMENTS.
3. WATER LEVELS INDICATED ON THE BORING LOGS MAY BE SUBJECT TO SEASONAL AND/OR ANNUAL VARIATIONS. A DEWATERING SYSTEM OF SUFFICIENT CAPACITY SHALL BE INSTALLED AND OPERATED TO MAINTAIN THE CONSTRUCTION AREA FREE OF WATER AT ALL TIMES.
4. ALL FOOTING EXCAVATIONS SHALL BE INSPECTED, PRIOR TO CONCRETE PLACEMENT, BY A SOILS ENGINEER TO VERIFY SUITABLE BEARING MATERIAL OF CAPACITY AS SPECIFIED.
5. NOTIFY THE OWNER'S REPRESENTATIVE WHEN ADDITIONAL EXCAVATION IS REQUIRED TO REACH SUITABLE BEARING MATERIAL.
6. THE SOILS ENGINEER SHALL CERTIFY IN WRITING THAT ALL FOUNDATIONS WERE PLACED ON SOIL WITH THE BEARING VALUE AS SPECIFIED.
7. WITHIN THE EXCAVATION AREA OF FOUNDATIONS, ALL VEGETATION, TOPSOIL, PREVIOUSLY PLACED FILL AND UNSUITABLE SOILS SHALL BE REMOVED. ALL FOOTINGS TO BEAR ON VIRGIN SOIL OR PROPERLY PLACED AND COMPACTED ENGINEERED FILL.
8. FOUNDATION DESIGN DOES NOT ACCOUNT FOR WINTER CONSTRUCTION. ANY UNENCLOSED / UNHEATED SPACES SHALL BE ADEQUATELY PROTECTED AGAINST FROST DURING WINTER CONSTRUCTION BY THE CONTRACTOR.
9. IF ANY SOFT SPOTS, OR AREAS QUESTIONABLE FOR ANY REASONS ARE ENCOUNTERED BY THE CONTRACTOR, ARCHITECT/ENGINEER SHALL BE NOTIFIED IMMEDIATELY SO THAT ANY REQUIRED ACTION MAY BE TAKEN PRIOR TO CONTINUATION OF CONSTRUCTION IN THAT AREA.

POST-INSTALLED ANCHOR NOTES

POST-INSTALLED ANCHORS SHALL ONLY BE USED WHERE SPECIFIED ON THE CONSTRUCTION DOCUMENTS. THE CONTRACTOR SHALL OBTAIN APPROVAL FROM CASE ENGINEERING PRIOR TO INSTALLING POST-INSTALLED ANCHORS IN PLACE OF MISSING OR MISPLACED CAST-IN-PLACE ANCHORS. CARE SHALL BE TAKEN IN PLACING POST-INSTALLED ANCHORS TO AVOID CONFLICTS WITH EXISTING REBAR. HOLES SHALL BE DRILLED AND CLEANED IN ACCORDANCE WITH THE MANUFACTURER'S WRITTEN INSTRUCTIONS. SUBSTITUTION REQUESTS FOR PRODUCTS OTHER THAN THOSE SPECIFIED ON THESE DRAWINGS SHALL BE SUBMITTED BY THE CONTRACTOR TO CASE ENGINEERING ALONG WITH CALCULATIONS THAT ARE PREPARED & SEALED BY A REGISTERED PROFESSIONAL ENGINEER. THE CALCULATIONS SHALL DEMONSTRATE THAT THE SUBSTITUTED PRODUCT IS CAPABLE OF ACHIEVING, AT A MINIMUM, THE PERTINENT EQUIVALENT PERFORMANCE VALUES OF THE SPECIFIED PRODUCT USING THE BUILDING CODE.

1. TYPICAL POST-INSTALLED ANCHORS IN CONCRETE AND CMU SHALL COMPLY WITH THE LATEST OF THEIR RESPECTIVE ICC EVALUATION REPORTS.
2. WHEN INSTALLING ANCHORS IN CONCRETE AND CMU, CONTRACTOR SHALL LOCATE EXISTING REINFORCING STEEL, CONDUITS, ETC, PRIOR TO DRILLING FOR ANCHORS. CONTRACTOR SHALL USE CARE AND CAUTION TO PREVENT DAMAGE TO EXISTING REINFORCING BARS.
3. CONTRACTOR SHALL PROVIDE 1" MINIMUM CLEARANCE BETWEEN EDGES OF ANY HOLES FOR POST-INSTALLED ANCHORS AND EXISTING REINFORCING STEEL.
4. CONTRACTOR SHALL PROVIDE INSPECTION AND TESTING AS REQUIRED PER THE "SPECIAL INSPECTIONS" SECTION OF THESE GENERAL STRUCTURAL NOTES.
5. CONTRACTOR SHALL USE A HOLLOW DRILL BIT AND VACUUM SYSTEM WHEN DRILLING INTO CEMENTITIOUS MATERIALS.

REINFORCING STEEL NOTES

1. NON-WELDED STEEL BAR REINFORCING SHALL CONFORM TO ASTM A615, GRADE 60. WELDED STEEL BAR REINFORCING SHALL CONFORM TO ASTM A706.
2. WELDING OF REINFORCING STEEL SHALL BE PERFORMED BY AWS QUALIFIED WELDERS IN CONFORMANCE WITH AWS D1.1 USING E90 ELECTRODES FOR ASTM A615 REBAR, AND E80 ELECTRODES FOR ASTM A706 REBAR UNLESS OTHERWISE NOTED ON THE DRAWINGS.
3. WELDED WIRE REINFORCEMENT (WWR) SHALL BE SMOOTH WIRE PER ASTM A185 WITH MINIMUM YIELD STRENGTH, fy = 65 ksi, OR DEFORMED WIRE PER ASTM A497 WITH MINIMUM YIELD STRENGTH, fy = 70 ksi, UNLESS NOTED OTHERWISE.
4. MINIMUM CONCRETE COVER FOR REINFORCING STEEL IN CAST-IN-PLACE (NON-PRESTRESSED) CONCRETE SHALL BE AS FOLLOWS UNLESS OTHERWISE NOTED ON THE DRAWINGS:
   A. CONCRETE CAST AGAINST EARTH = 3"
   B. CONCRETE EXPOSED TO EARTH OR WEATHER:
      - #6 BAR AND LARGER = 2"
      - #5 BAR AND SMALLER = 1 1/2"
   C. CONCRETE NOT EXPOSED TO EARTH OR WEATHER (SLABS, WALLS, & JOISTS):
      - #14 BARS AND LARGER = 1 1/2"
      - #11 BARS AND SMALLER = 3/4"
   D. CONCRETE NOT EXPOSED TO EARTH OR WEATHER (BEAMS & COLUMNS):
      - PRIMARY REINFORCEMENT, TIES, STIRRUPS, & SPIRALS = 1 1/2"
5. ALL DETAILING, FABRICATION, AND ERECTION OF REINFORCING STEEL SHALL CONFORM TO THE LATEST EDITION OF ACI 315 (SP-66), DETAILS AND DETAILING OF CONCRETE REINFORCEMENT.
6. LAP SPLICE LENGTHS FOR BARS INSTALLED IN CONCRETE AND CMU SHALL BE IN ACCORDANCE WITH THE TABLE(S).

DEVELOPMENT LENGTH OF STANDARD HOOKS IN CONCRETE NOTES

1. VALUES IN TABLE ARE BASED ON 60ksi REBAR. FOR OTHER REBAR YIELD STRENGTHS, MULTIPLY VALUES IN THE TABLE BY THE SPECIFIED YIELD STRENGTH DIVIDED BY 60.
2. VALUES IN THE TABLE SHALL BE MULTIPLIED BY 1.2 FOR EPOXY COATED BARS.
3. REBAR IN ALL CONCRETE MEMBERS SHALL HAVE STANDARD HOOKS WHERE SHOWN ON SECTIONS IN ACCORDANCE WITH "DEVELOPMENT LENGTH OF STANDARD HOOKS IN TENSION" TABLE, UNLESS SPECIFICALLY NOTED OTHERWISE ON THE DRAWINGS.

DEVELOPMENT LENGTH OF STANDARD HOOKS IN CONCRETE - 60 ksi REBAR TABLE (INCHES)

BAR SIZE	f'c = 4,000 psi	f'c = 4,500 psi	f'c = 5,000 psi
#3	8	7	7
#4	10	9	9
#5	12	12	11
#6	15	14	13
#7	17	16	15
#8	19	18	17
#9	22	21	20
#10	25	23	22
#11	27	26	24

TENSION LAP SPLICE LENGTH IN CONCRETE NOTES

1. FOR HORIZONTAL BARS, VALUES IN THE TABLE SHALL BE MULTIPLIED BY 1.3 WHERE MORE THAN 12 INCHES OF FRESH CONCRETE IS CAST BELOW THE BAR.
2. VALUES IN THE TABLE SHALL BE MULTIPLIED BY 1.5 FOR EPOXY COATED BARS WITH CLEAR COVER LESS THAN 3 BAR DIAMETERS OR CLEAR SPACING LESS THAN 6 BAR DIAMETERS. MULTIPLY VALUES IN TABLE BY 1.2 FOR ALL OTHER EPOXY COATED BARS.
3. VALUES IN TABLE NEED NOT TO BE MULTIPLIED BY MORE THAN 1.7 DUE TO THE INCREASE FROM NOTES 1 AND 2.
4. LAP SPLICES IN TENSION ARE NOT PERMITTED FOR BAR LARGER THAN #11. A FULL MECHANICAL OR FULL WELDED SPLICE SHALL DEVELOP AT LEAST 1.25fy OF THE BAR.
5. WHERE CLEAR SPACING OF BARS BEING SPLICED IS AT LEAST 2 BAR DIAMETERS AND CLEAR COVER AT LEAST 1 BAR DIAMETER, USE CASE 1. FOR ALL OTHER BAR ARRANGEMENTS, USE CASE 2.
6. VALUES IN THE TABLE ARE BASED ON 60ksi REBAR. FOR OTHER REBAR YIELD STRENGTHS, MULTIPLY VALUES IN THE TABLE BY THE SPECIFIED YIELD STRENGTH DIVIDED BY 60.
7. WHERE BARS OF DIFFERENT SIZES ARE SPLICED, PROVIDE THE LAP LENGTH OF THE LARGER BAR.
8. WELDED WIRE REINFORCEMENT (DEFORMED OR PLAIN WIRE) SHALL BE LAPPED ONE FULL MESH SQUARE PLUS 2 INCHES MINIMUM, BUT NOT LESS THAN 12 INCHES.
9. REBAR IN ALL CONCRETE MEMBERS SHALL BE SPLICED IN ACCORDANCE WITH "TENSION LAP SPLICE LENGTH" TABLE, UNLESS SPECIFICALLY NOTED OTHERWISE ON THE DRAWINGS.

TENSION LAP SPLICE LENGTH IN CONCRETE - 60 KSI REBAR TABLE (INCHES)

f'c =	3,500psi	3,500psi	4,000psi	4,000psi	4,500psi	4,500psi	5,000psi	5,000psi
BAR SIZE	CASE 1	CASE 2	CASE 1	CASE 2	CASE 1	CASE 2	CASE 1	CASE 2
#3	20	30	19	28	18	27	17	25
#4	27	40	25	37	24	35	23	34
#5	33	50	31	47	30	44	28	42
#6	40	60	37	56	35	53	34	50
#7	58	87	54	81	51	77	49	73
#8	66	99	62	93	59	88	56	83
#9	75	112	70	105	66	99	63	94
#10	84	126	79	118	74	111	71	106
#11	93	140	87	131	82	123	78	117

bond architects
222 SOUTH CENTRAL AVE.
SUITE# 501
ST. LOUIS, MO 63105
TEL: 314.863.4994
FAX: 314.863.4996
www.bondarchitectsinc.com
Bond Architects, Inc.
Missouri State Certificate of Authority # 2009027409

CASE Engineering Inc.
796 Meras Court
St. Louis, MO 63026 | T 636.349.1600
CERTIFICATE OF AUTHORITY NO. 001498

CASE ENGINEERING: BDA-MO-05-26 (R26)
DRAWN BY: BW CHECKED BY: TV

Barretts Elementary School
1780 CARMAN RD., MANCHESTER, MO 63021
Parkway Project #: PN012501B
BUILDING RENOVATION & SITE IMPROVEMENTS
Parkway School District
363 N. Woods Mill Rd.,
Chesterfield, MO 63017
314.415.8231 tel

Project No: 26016

Revisions

Description	Date

This drawing and the details on it are the sole property of the architect and may be used for this specific project only. It shall not be loaned, copied or reproduced, in whole or in part, or for any other purpose or project without the written consent of the Architect.
Copyright © 2023 by Bond Architects, Inc.

STATE OF MISSOURI
KYLE LINNENFELSER
NUMBER PE-2010036255
PROFESSIONAL ENGINEER
11/04/26

The Professional Architects seal affixed to this sheet applies only to the material and items shown on this sheet. All drawings, instruments or other documents not exhibiting this seal shall not be considered prepared by this architect, and this architect expressly disclaims any and all responsibility for such plan, drawings or documents not exhibiting this seal.

DATE: 11/12/2026

BID/ PERMIT SET

GENERAL NOTES

S1.1

11/4/2026 1:07:53 PM

SCALE: 3" = 1'-0"

SCALE: 1 1/2" = 1'-0"

SCALE: 1" = 1'-0"

SCALE: 3/4" = 1'-0"

SCALE: 1/2" = 1'-0"

SCALE: 1/4" = 1'-0"

SCALE: 1/8" = 1'-0"

SCALE: 1/16" = 1'-0"

11/4/2026 1:07:53 PM

CONCRETE NOTES

1. ALL CONCRETE WORK INCLUDING FORMING, REINFORCING, MIXING, PLACING, FINISHING AND CURING SHALL BE DONE IN ACCORDANCE WITH THE ACI MANUAL OF CONCRETE PRACTICE INCLUDING "BUILDING CODE REQUIREMENTS FOR STRUCTURAL CONCRETE", ACI 318, AND "SPECIFICATIONS FOR STRUCTURAL CONCRETE", ACI 301 LATEST EDITIONS.
2. IT SHALL BE THE RESPONSIBILITY OF THE MIX DESIGN SUPPLIER TO PROPORTION MIXES APPROPRIATELY TO REACH THE REQUIRED PROPERTIES NOTED, AND SHALL BE APPROPRIATE FOR THEIR INTENDED USE. ADMIXTURES MEETING ASTM C494 ARE OPTIONAL. HOWEVER, AIR-ENTRAINING ADMIXTURES MEETING ASTM C260 SHALL BE USED FOR CONCRETE EXPOSED TO THE EXTERIOR OR FREEZE-THAW CYCLES.
3. CONTRACTOR SHALL SUBMIT CONCRETE MIX DESIGNS FOR EACH INTENDED USE ON THE PROJECT FOR REVIEW AND APPROVAL BY CASE ENGINEERING. CONTENTS OF THE MIX DESIGN SHALL COMPLY WITH, AND INCLUDE ALL INFORMATION REQUIRED BY, ACI 318, CHAPTER 5 (FOR 2011 AND EARLIER CODE EDITIONS), & CHAPTER 26 (FOR 2014 CODE EDITION). THIS INCLUDES, BUT IS NOT LIMITED TO NUMBER OF TESTS AND AGE OF TESTS INCLUDED IN THE MIX DESIGN REPORT.
4. ALL CONCRETE DENSITY SHALL BE NORMAL WEIGHT (145 pcf +/- 5) UNLESS OTHERWISE INDICATED. LIGHT WEIGHT CONCRETE SHALL BE 110 pcf +/- 5, UNO.
5. FLY ASH ALLOWANCES:
   - 20% MAXIMUM BY WEIGHT OF CEMENTITIOUS IN FOOTINGS
   - 15% MAXIMUM BY WEIGHT OF CEMENTITIOUS MATERIAL IN SLABS
6. COORDINATE CONCRETE WORK WITH THAT OF OTHER TRADES TO ALLOW FOR SETTING OF SLEEVES, ACCESSORIES, ETC.
7. ALL REINFORCING STEEL, ANCHOR RODS, DOWELS, AND INSERTS SHALL BE WELL-SECURED IN POSITION PRIOR TO PLACING CONCRETE. DO NOT "WET SET" OR "FLOAT" INTO CONCRETE.
8. TEST CYLINDERS WILL BE REQUIRED, AND RECORDS OF RESULTS SHALL BE SUBMITTED TO CASE ENGINEERING. PROVIDE A MINIMUM OF (4) 6"x12" OR (5) 4"x8" CYLINDERS OF EACH MIX DESIGN FOR TESTING AT THE FREQUENCIES LISTED BELOW. TEST 1 AT 7 DAYS, 2 AT 28 DAYS FOR 6"x12" CYLINDERS, OR 3 AT 28 DAYS FOR 4"x8" CYLINDERS. KEEP 1 SPARE FOR FURTHER TESTING IF NEEDED. CYLINDERS SHALL BE TAKEN AND TESTED NO LESS THAN THE FOLLOWING: (SLUMP TESTS ARE RECOMMENDED)
   A. ONCE A DAY
   B. FOR EACH 150 CUBIC YARDS POURED
   C. FOR EACH 5,000 SQ. FT. OF SURFACE AREA POURED
9. CONSTRUCTION JOINTS IN CONCRETE INDICATED WITH A ROUGH, CLEAN SURFACE SHALL HAVE A 1/4" AVERAGE AMPLITUDE.
10. ALL COLD JOINTS SHALL BE ROUGHENED AND CLEANED PRIOR TO PLACING CONCRETE.
11. SLUMP: CONCRETE MIXES SHALL BE PROPORTIONED TO ACHIEVE A MAXIMUM SLUMP OF 8" FOR CONCRETE CONTAINING HIGH RANGE WATER REDUCING ADMIXTURE. 6" FOR CONCRETE CONTAINING A MID-RANGE WATER REDUCING ADMIXTURE. MIXES SHALL HAVE A WATER SLUMP OF 2"-3" PRE-ADDITIVE (3" TO 4" FOR CONCRETE RECEIVING A "DRY-SHAKE" HARDENER). MAXIMUM 4" WATER SLUMP FOR ALL OTHER CONCRETE NOT CONTAINING A WATER REDUCER.
12. DEPOSIT AND CONSOLIDATE CONCRETE FOR FLOORS AND SLABS IN A CONTINUOUS OPERATION, WITHIN LIMITS OF CONSTRUCTION JOINTS, UNTIL PLACEMENT OF A PANEL OR SECTION IS COMPLETE.
   A. CONSOLIDATE CONCRETE DURING PLACEMENT OPERATIONS, SO CONCRETE IS THOROUGHLY WORKED AROUND REINFORCEMENT AND OTHER EMBEDDED ITEMS AND INTO CORNERS.
   B. MAINTAIN REINFORCEMENT IN POSITION ON CHAIRS DURING CONCRETE PLACEMENT.
   C. SCREED SLAB SURFACES WITH A STRAIGHT EDGE AND STRIKE OFF TO CORRECT ELEVATIONS.
   D. UTILIZE A VIBRATORY SCREED FOR CONCRETE THAT WILL RECEIVE DIAMOND POLISH FINISH. KEEP VIBRATING SCREED MOVING CONTINUOUSLY ACROSS SURFACE. DO NOT STOP SCREED IN ANY ONE PLACE WHILE VIBRATING.
   E. SLOPE SURFACES UNIFORMLY TO DRAINS WHERE REQUIRED.
   F. BEGIN INITIAL FLOATING USING BULL FLOATS OR DARBIES TO FORM A UNIFORM AND OPEN-TEXTURED SURFACE PLANE BEFORE EXCESS BLEED WATER APPEARS ON THE SURFACE. DO NOT FURTHER DISTURB SLAB SURFACES BEFORE STARTING FINISHING OPERATIONS.
   G. THE USE OF HIGHWAY STRAIGHT EDGES OR "BUMP CUTTERS" ON CONCRETE SLABS TO BE POLISHED IS PROHIBITED.
13. CONCRETE TO BE POLISHED SHALL RECEIVE A HARD STEEL TROWEL FINISH WITH A MINIMUM OF (3) SEPARATE PASSES WITH POWER TROWEL TO ACHIEVE CLASS 5 FINISH AS DESCRIBED IN ACI 302R. HAND TROWELLING SHALL BE LIMITED TO ONLY THOSE AREAS NECESSARY. REFER TO ARCHITECTURAL DRAWINGS FOR ADDITIONAL INFORMATION.
   A. INSPECT TROWELLING MACHINE AND REMOVE ACCUMULATED MORTAR PRIOR TO EACH PASS.
   B. FINISH SURFACE SHALL BE FREE OF TROWEL MARKS, BURN MARKS AND MOTTLING.
14. ALL SLABS-ON-GRADE SHALL MEET THE SPECIFIED OVERALL FLOOR FLATNESS (FF) AND OVERALL FLOOR LEVELNESS (FL) MEASUREMENTS PROVIDED BASED ON BUILDING USE. COORDINATE WITH THE ARCHITECT, EQUIPMENT MANUFACTURERS AND OWNER/TENANT FOR MORE STRINGENT SPECIFIED OVERALL REQUIREMENTS AND FOR ANY MINIMUM LOCAL VALUES UNDER SPECIFIC EQUIPMENT. TESTING SHALL BE DONE ON SLABS REQUIRED TO BE "FLAT" OR "SUPER FLAT" OR AT OWNER / TENANT REQUEST IN ACCORDANCE WITH ASTM E 1155 AND WITHIN 16 TO 72 HOURS OF THE FINAL TROWELLING OPERATION.
   A. CONVENTIONAL: NONPUBLIC AREAS, MECHANICAL ROOMS, PARKING STRUCTURES
      - $F_F = 20$, $F_L = 15$
   B. MODERATELY FLAT: COMMERCIAL BUILDINGS
      - $F_F = 25$, $F_L = 20$
   C. FLAT: WAREHOUSES WITH STANDARD FORKLIFT TRAFFIC, SLAB UNDER THIN-SET TILE FLOORS
      - $F_F = 35$, $F_L = 25$
   D. SUPER FLAT: WAREHOUSES WITH ROBOTICS OR COMPLEX LOGISTIC RACKING SYSTEMS
      - $F_F > 60$, $F_L > 40$ (VERIFY VALUES)
15. ALL CONCRETE SHALL HAVE A MINIMUM 28-DAY COMPRESSIVE STRENGTH IN ACCORDANCE WITH THE FOLLOWING:
   A. AIR ENTRAINMENT IS NOT RECOMMENDED FOR SURFACES TO BE GIVEN A SMOOTH, DENSE, HARD-TROWELED FINISH. COORDINATE FINISH REQUIREMENTS WITH ARCHITECTURAL DRAWINGS AND/ OR SPECIFICATIONS.

CONCRETE TABLE

INTENDED USE	EXPOSURE CLASS	MIN 28 DAY STRENGTH (psi)	MAX WATER-CEMENT RATIO	% TOTAL AIR LIMITS	% MAX SHRINKAGE @ 28 DAYS
FOOTING & FOUNDATION WALLS	F2	4,500	0.45	4.5 TO 7.5	0.05
BASEMENT WALLS, RETAINING WALLS, GRADE BEAMS & TIE BEAMS	F2	4,500	0.45	4.5 TO 7.5	0.05
ALL CONCRETE NOT OTHERWISE SPECIFIED	F3	5,000	0.40	4.5 TO 7.5	0.05

SPECIAL INSPECTIONS

1. REFER TO THE SPECIAL INSPECTION TABLES FOR THE LIST OF ELEMENTS OF CONSTRUCTION THAT SHALL REQUIRE SPECIAL INSPECTION. THIS SHALL BE CONSIDERED A GUIDE, AND THE CONTRACTOR AND INSPECTOR SHALL REFER TO THE IBC FOR COMPLETE REQUIREMENTS, QUALIFICATIONS, EXCEPTIONS, AND SUBMITTALS. REFER TO IBC CHAPTER 17. THE OWNER SHALL BE RESPONSIBLE FOR EMPLOYING THE SPECIAL INSPECTION AGENCY. ANY "OBSERVATIONS" BY CASE ENGINEERING WILL NOT BE TO PERFORM SPECIAL INSPECTIONS AND SHALL NOT BE INTERPRETED AS SUCH.
2. COPIES OF ALL INSPECTION REPORTS THAT REPORT COMPLIANCE SHALL BE SUBMITTED TO THE ARCHITECT OF RECORD, CASE ENGINEERING, AND BUILDING INSPECTOR WITHIN 7 CALENDAR DAYS OF COMPLETION OF THAT PORTION OF WORK. A MINIMUM OF ONE (1) PROGRESS REPORT PER MONTH FOR EACH TYPE OF CONSTRUCTION REQUIRING SPECIAL INSPECTION SHALL BE SUBMITTED TO CASE ENGINEERING.
3. SPECIAL INSPECTOR SHALL INFORM CASE ENGINEERING IMMEDIATELY OF NON-COMPLIANCE WITH CONSTRUCTION DOCUMENTS OR APPROVED SUBMITTALS. CONTACT CASE ENGINEERING THE SAME DAY NON-COMPLIANCE IS DISCOVERED AND FOLLOW UP WITH AN OFFICIAL REPORT WITHIN 2 BUSINESS DAYS.
4. THE SPECIAL INSPECTIONS IDENTIFIED ON THE PLANS ARE IN ADDITION TO, AND NOT A SUBSTITUTE FOR THOSE INSPECTIONS REQUIRED TO BE PERFORMED BY A BUILDING INSPECTOR.
5. SPECIAL INSPECTIONS ARE NOTED AS EITHER "CONTINUOUS" OR "PERIODIC". A "CONTINUOUS" INSPECTION REQUIRES THE PRESENCE OF A QUALIFIED INSPECTOR IN THE VICINITY OF THE WORK BEING PERFORMED FOR 100% OF THAT WORK. A "PERIODIC" INSPECTION REQUIRES PART-TIME OBSERVATION OF THE WORK BEING PERFORMED. THE INSPECTOR SHALL ALSO OBSERVE THE FINAL CONDITION OF THE WORK BEFORE IT IS CLOSED FROM VIEW.
6. WHEN WORK IN MORE THAN ONE CATEGORY OF WORK REQUIRING SPECIAL INSPECTION IS TO BE PERFORMED SIMULTANEOUSLY, OR THE GEOGRAPHIC LOCATION OF THE WORK IS SUCH THAT IT CANNOT BE CONTINUOUSLY OBSERVED, IT SHALL BE THE RESPONSIBILITY OF THE AGENT TO EMPLOY A SUFFICIENT NUMBER OF SPECIAL INSPECTORS TO ASSURE THAT ALL WORK IS CONTINUOUSLY INSPECTED IN ACCORDANCE WITH THOSE PROVISIONS.
7. SPECIAL INSPECTIONS AND TESTS ARE NOT REQUIRED FOR PORTIONS OF STRUCTURES DESIGNED AND CONSTRUCTED IN ACCORDANCE WITH THE COLD-FORMED STEEL LIGHT-FRAME CONSTRUCTION PROVISIONS OF SECTION 2211 OF THE IBC OR THE CONVENTIONAL LIGHT-FRAME CONSTRUCTION PROVISIONS OF SECTION 2308 OF THE IBC.

SPECIAL INSPECTIONS - CONCRETE TABLE

ITEM	INSPECTION FREQUENCY	SCOPE
REINFORCEMENT	PERIODIC	INSPECT REINFORCEMENT AND PLACEMENT; VERIFY CONFORMANCE WITH CONSTRUCTION DOCUMENTS, AND THAT BARS ARE FREE FROM MATERIALS THAT COULD PREVENT BOND, ARE ADEQUATELY LAPPED, SPLICED, TIED, AND SUPPORTED
REINFORCEMENT	PERIODIC	VERIFY WELDABILITY OF REBAR OTHER THAN ASTM A 706; INSPECT SINGLE PASS FILLET WELDS NOT GREATER THAN 5/16"
REINFORCEMENT	CONTINUOUS	INSPECT ALL OTHER WELDS (SEE ALSO "STEEL" SPECIAL INSPECTIONS TABLE)
MIX DESIGN	PERIODIC	VERIFY USE OF APPROVED MIX DESIGN
SAMPLING AND TESTING	CONTINUOUS	PRIOR TO CONCRETE PLACEMENT, FABRICATE SPECIMENS FOR STRENGTH TESTING; PERFORM SLUMP AND AIR CONTENT TESTS, AND DETERMINE TEMPERATURE OF THE CONCRETE
CONCRETE PLACEMENT	PERIODIC	VERIFY MAINTENANCE OF CURING TEMPERATURE AND TECHNIQUES
CONCRETE PLACEMENT	CONTINUOUS	CONCRETE PLACEMENT

SPECIAL INSPECTIONS - SOILS AND FOUNDATIONS TABLE

ITEM	INSPECTION FREQUENCY	SCOPE
SOILS	PERIODIC	VERIFY MATERIALS BELOW SHALLOW FOUNDATIONS ARE ADEQUATE TO ACHIEVE THE DESIGN BEARING CAPACITY; VERIFY EXCAVATIONS ARE EXTENDED TO PROPER DEPTH AND HAVE REACHED PROPER MATERIAL; PERFORM CLASSIFICATION AND TESTING OF COMPACTED FILL MATERIALS; PRIOR TO PLACEMENT OF COMPACTED FILL, INSPECT SUBGRADE AND VERIFY THAT SITE HAS BEEN PREPARED PROPERLY
SOILS	CONTINUOUS	VERIFY USE OF PROPER MATERIALS, DENSITIES, LIFT THICKNESSES, AND COMPACTION OF FILL; VERIFY MATERIALS AND PROCEDURES COMPLY WITH THE GEOTECHNICAL REPORT / SOILS ENGINEER

bond architects
222 SOUTH CENTRAL AVE.
SUITE# 501
ST. LOUIS, MO 63105
TEL: 314.863.4994
FAX: 314.863.4996
www.bondarchitectsinc.com
Bond Architects, Inc.
Missouri State Certificate of Authority # 2009027409

CASE Engineering Inc.
796 Meras Court
St. Louis, MO 63026 | T 636.349.1600
CERTIFICATE OF AUTHORITY NO. 001498

CASE ENGINEERING: BDA-MO-05-26 (R26)
DRAWN BY: BW CHECKED BY: TV

Barretts Elementary School
1780 CARMAN RD., MANCHESTER, MO 63021
Parkway Project #: PN012501B
BUILDING RENOVATION & SITE IMPROVEMENTS
Parkway School District
363 N. Woods Mill Rd.,
Chesterfield, MO 63017
314.415.8231 tel

Project No: 26016

Revisions

Description	Date

This drawing and the details on it are the sole property of the architect and may be used for this specific project only. It shall not be loaned, copied or reproduced, in whole or in part, or for any other purpose or project without the written consent of the Architect.
Copyright © 2023 by Bond Architects, Inc.

STATE OF MISSOURI
KYLE LINNEFELSER
NUMBER PE-2010036255
PROFESSIONAL ENGINEER
1/04/26

The Professional Architects seal affixed to this sheet applies only to the material and items shown on this sheet. All drawings, instruments or other documents not exhibiting this seal shall not be considered prepared by this architect, and this architect expressly disclaims any and all responsibility for such plan, drawings or documents not exhibiting this seal.

DATE: 11/12/2026

BID/ PERMIT SET

GENERAL NOTES

S1.2

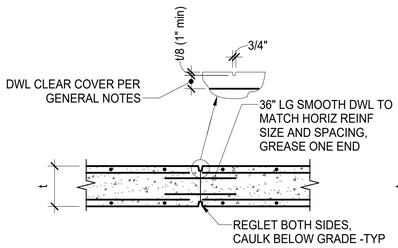

NOTE:
25'-0"oc MAX. SPACING OR AS APPROVED BY OWNER/ARCHITECT/ENGINEER

CONTROL JOINT

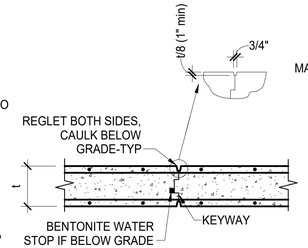

NOTE:
LOCATION TO BE BY CONTRACTOR.

CONSTRUCTION JOINT

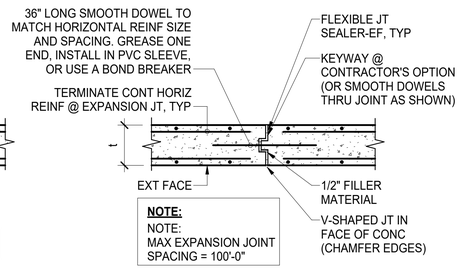

NOTE:
NOTE:
MAX EXPANSION JOINT SPACING = 100'-0"

EXPANSION JOINT

A TYP CONCRETE WALL CONTROL, CONSTRUCTION, AND EXPANSION JOINT DETAILS

S1.3 N.T.S.

NOTES:
1. WHERE SINGLE CURTAIN OF REINFORCING OCCURS, BEND BARS AS SHOWN FOR OUTSIDE BARS.
2. FOR MORE THAN 2 BARS PER LAYER, EXTEND INNER BARS 12" INTO PERPENDICULAR FOOTING. OUTER BARS SHALL BE PLACED AS INDICATED.
3. CORNER BARS TO MATCH WALL REINFORCEMENT.

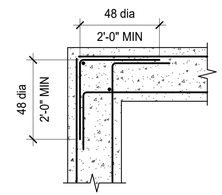

PLAN OF TYPICAL CORNER

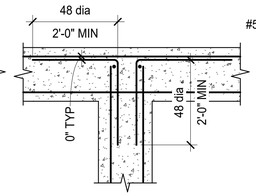

PLAN OF INTERSECTION

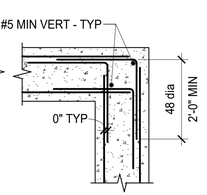

PLAN OF ALTERNATE CORNER

B TYP CONCRETE FOOTING, FOUNDATION, & WALL REINFORCEMENT DETAIL

S1.3 N.T.S.

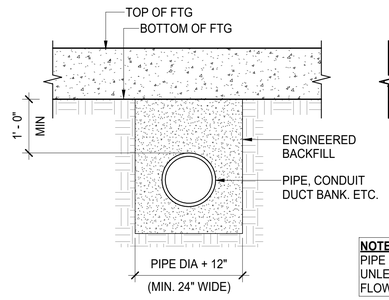

BELOW BOTTOM OF FOOTING

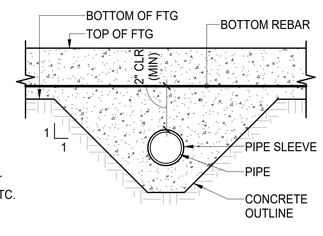

NOTE:
PIPE SLEEVE I.D. 2" LARGER THAN O.D. OF PIPE TYPICAL UNLESS NOTED OTHERWISE. CAULK OR PROVIDE FLOWABLE GROUT w/ COMPRESSIBLE WRAP AROUND PIPE.

CLOSE TO BOTTOM OF FOOTING

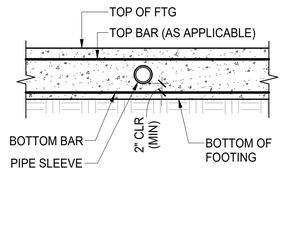

CLEAR OF TOP & BOTTOM BAR IN FOOTING OR FOUNDATION WALL (OR TRENCH FOOTING/GRADE BM.)

C TYP FOUNDATION PIPE PENETRATION DETAILS

S1.3 N.T.S.

bond architects
222 SOUTH CENTRAL AVE.
SUITE# 501
ST. LOUIS, MO 63105
TEL: 314.863.4994
FAX: 314.863.4996
www.bondarchitectsinc.com
Bond Architects, Inc.
Missouri State Certificate of Authority # 2009027409

CASE Engineering Inc.
796 Meras Court
St. Louis, MO 63026 | T 636.349.1600
CERTIFICATE OF AUTHORITY NO. 001498
CASE ENGINEERING: BDA-MO-05-26 (R26)
DRAWN BY: BW CHECKED BY: TV

Barretts Elementary School
1780 CARMAN RD., MANCHESTER, MO 63021
Parkway Project #: PN012501B
BUILDING RENOVATION & SITE IMPROVEMENTS

Parkway School District
363 N. Woods Mill Rd.,
Chesterfield, MO 63017
314.415.8231 tel

Project No: 26016

Revisions

Description	Date

This drawing and the details on it are the sole property of the architect and may be used for this specific project only. It shall not be loaned, copied or reproduced, in whole or in part, or for any other purpose or project without the written consent of the Architect. Copyright © 2023 by Bond Architects, Inc.

STATE OF MISSOURI
KYLE LINENFELSER
NUMBER PE-2010036255
PROFESSIONAL ENGINEER
11/04/26

The Professional Architects seal affixed to this sheet applies only to the material and items shown on this sheet. All drawings, instruments or other documents not exhibiting this seal shall not be considered prepared by this architect, and this architect expressly disclaims any and all responsibility for such plan, drawings or documents not exhibiting this seal.

DATE: 11/12/2026

BID/ PERMIT SET

TYPICAL DETAILS

S1.3

11/4/2026 1:07:54 PM

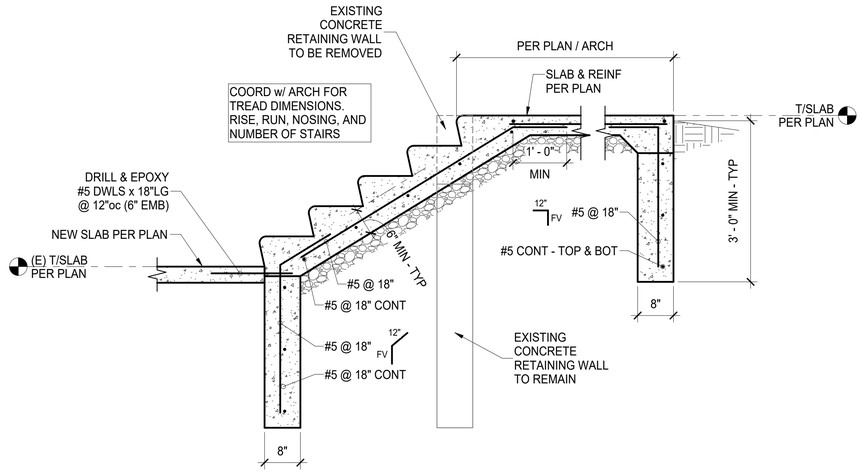

A S2.1 TYP CONCRETE STAIR DETAIL

N.T.S.

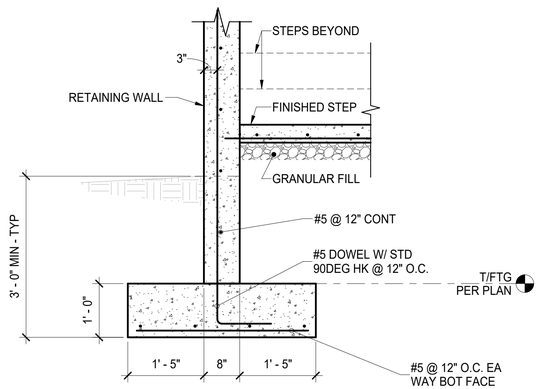

B S2.1 TYP SECTION AT CONCRETE STAIR DETAIL

N.T.S.

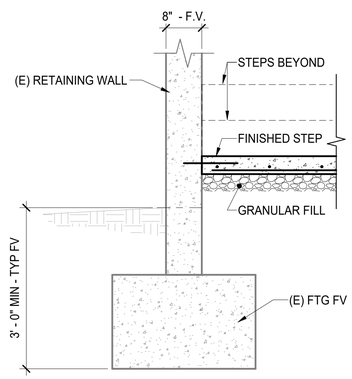

C S2.1 TYP SECTION AT CONCRETE STAIR DETAIL

N.T.S.

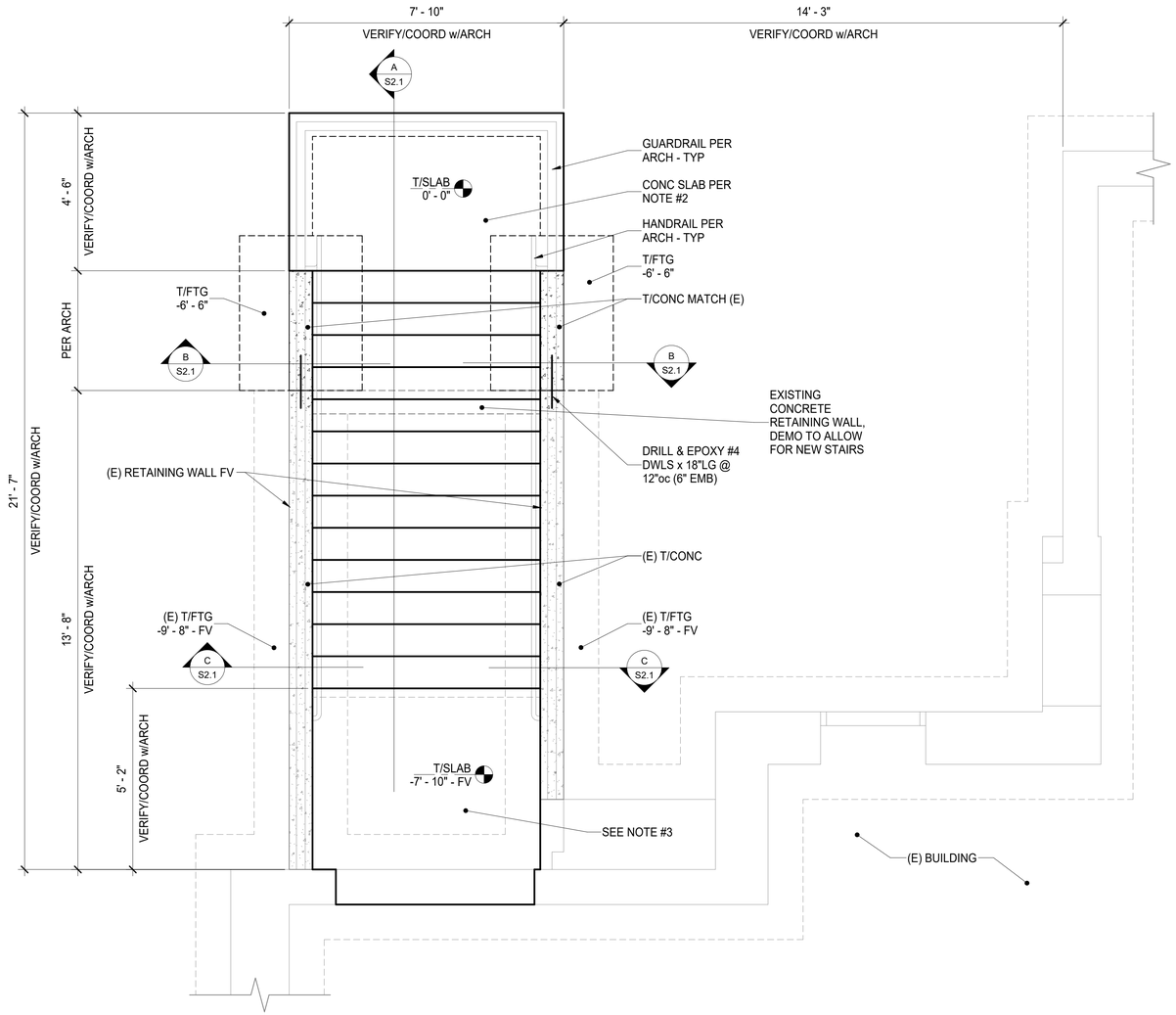

STAIRWELL FOUNDATION PLAN

PLAN NOTES

SCALE: 1/2" = 1'-0"

1. SEE SHEETS S1.1 - S1.3 FOR GENERAL NOTES AND TYPICAL DETAILS.
2. 4" CONCRETE SLAB REINFORCED WITH ONE LAYER OF 6x6 - W2.9xW2.9 WWR OVER 6" MINIMUM COMPACTED FREE-DRAINING GRANULAR MATERIAL.
3. EXISTING CONCRETE SLAB TO BE REMOVED CAREFULLY TO PROTECT EXISTING DRAIN AND PLUMBING LINE. REPLACE WITH SLAB PER NOTE #2. SLOPE NEW SLAB TO EXISTING DRAIN.
4. SEE ARCHITECTURAL DRAWINGS FOR STAIRS, DIMENSIONS, SECTIONS, AND ELEVATIONS NOT SHOWN HEREON.
5. FOOTING STEP LOCATIONS (IF SHOWN) ARE GIVEN AS APPROXIMATE. GENERAL CONTRACTOR TO COORDINATE FINAL FOOTING STEP LOCATIONS WITH THE CIVIL DRAWINGS.
6. ALL ELEVATIONS ARE REFERENCED FROM FINISHED MAIN FLOOR = 0'-0"
   - T/FTG = TOP OF FOOTING = PER PLAN
   - T/CONC = TOP OF CONCRETE = PER PLAN
7. REMOVE & REPLACE RETAINING WALLS/FOOTINGS IN THEIR ENTIRETY (IF DETERMINED DURING DEMOLITION OF EXISTING STAIRS THAT RETAINING WALLS DO NOT EXTEND TO REQUIRED DEPTHS FOR THE NEW LESS STEEP CODE COMPLIANT STAIRS).

bond architects
222 SOUTH CENTRAL AVE.
SUITE# 501
ST. LOUIS, MO 63105
TEL: 314.863.4994
FAX: 314.863.4996
www.bondarchitectsinc.com
Bond Architects, Inc.
Missouri State Certificate of Authority # 2009027409

CASE Engineering Inc.
796 Meras Court
St. Louis, MO 63026 | T 636.349.1600
CERTIFICATE OF AUTHORITY NO. 001498

CASE ENGINEERING: BDA-MO-05-26 (R26)
DRAWN BY: BW CHECKED BY: TV

Barretts Elementary School
1780 CARMAN RD., MANCHESTER, MO 63021
Parkway Project #: PN012501B
BUILDING RENOVATION & SITE IMPROVEMENTS
Parkway School District
363 N. Woods Mill Rd.,
Chesterfield, MO 63017
314.415.8231 tel

Project No: 26016

Revisions

Description	Date

This drawing and the details on it are the sole property of the architect and may be used for this specific project only. It shall not be loaned, copied or reproduced, in whole or in part, or for any other purpose or project without the written consent of the Architect.
Copyright © 2023 by Bond Architects, Inc.

STATE OF MISSOURI
KYLE LINDENFELSER
NUMBER PE-2010036255
PROFESSIONAL ENGINEER
11/04/26

The Professional Architects seal affixed to this sheet applies only to the material and items shown on this sheet. All drawings, instruments or other documents not exhibiting this seal shall not be considered prepared by this architect, and this architect expressly disclaims any and all responsibility for such plan, drawings or documents not exhibiting this seal.

DATE: 11/12/2026

BID/ PERMIT SET

STAIRWELL FOUNDATION PLAN

S2.1

11/4/2026 1:07:54 PM