Poettker Construction

PARKWAY SCHOOL DISTRICT

WEST CAMPUS - EARLY CHILDHOOD CENTER WEST

BUILDING RENOVATION AND SITE IMPROVEMENTS

VOLUME THREE: TECHNICAL

ISSUE FOR PERMIT/BID
PROJECT MANUAL
05 NOVEMBER 2026

PARKWAY SCHOOLS

BID NUMBER: 27-60

Owner's Project Number: PN652501B
Architect's Project Number: 26023

bond architects

Bond Architects, Inc.
222 South Central Avenue, Suite 501
St. Louis, MO 63105
314.863.4994

SECTION 000110
TABLE OF CONTENTS

PROCUREMENT AND CONTRACTING REQUIREMENTS

1.01 DIVISION 00 -- PROCUREMENT AND CONTRACTING REQUIREMENTS

A. 000110 - Table of Contents

SPECIFICATIONS

2.01 DIVISION 02 -- EXISTING CONDITIONS

A. 024100 - Demolition

B. 028213 - Removal of Asbestos Containing Materials

C. 028233 - Disposal of Asbestos Containing Waste Materials

D. 028236 - Removal of Class II Asbestos Containing Materials

2.02 DIVISION 03 -- CONCRETE

A. 030100 - Maintenance of Concrete

B. 032000 - Concrete Reinforcing

C. 033000 - Cast-in-Place Concrete

2.03 DIVISION 04 -- MASONRY

A. 040100 - Maintenance of Masonry

2.04 DIVISION 05 -- METALS

A. 054000 - Cold-Formed Metal Framing

B. 055000 - Metal Fabrications

C. 055213 - Pipe and Tube Railings

2.05 DIVISION 06 -- WOOD, PLASTICS, AND COMPOSITES

A. 060573 - Wood Treatment

B. 061000 - Rough Carpentry

C. 062000 - Finish Carpentry

2.06 DIVISION 07 -- THERMAL AND MOISTURE PROTECTION

A. 072100 - Thermal Insulation

B. 079200 - Joint Sealants

2.07 DIVISION 08 -- OPENINGS

A. 080671 - Door Hardware Schedule

B. 081213 - Hollow Metal Frames

C. 081416 - Flush Wood Doors

D. 083100 - Access Doors and Panels

E. 087100 - Door Hardware

F. 088300 - Mirrors

G. 089100 - Louvers

2.08 DIVISION 09 -- FINISHES

A. 090561 - Common Work Results for Flooring Preparation

B. 092116 - Gypsum Board Assemblies

C. 092119 - Enclosure of Asbestos Containing Materials

D. 093000 - Tiling

E. 095100 - Acoustical Ceilings
F. 096500 - Resilient Flooring
G. 096813 - Tile Carpeting
H. 099123 - Interior Painting

2.09 DIVISION 10 -- SPECIALTIES

A. 101400 - Signage
B. 102113.19 - Plastic Toilet Compartments
C. 102800 - Toilet, Bath, and Laundry Accessories
D. 104400 - Fire Protection Specialties
E. 105617 - Wall Mounted Standards and Shelving

2.10 DIVISION 11 -- EQUIPMENT

2.11 DIVISION 12 -- FURNISHINGS

2.12 DIVISION 13 -- SPECIAL CONSTRUCTION

2.13 DIVISION 14 -- CONVEYING EQUIPMENT

2.14 DIVISION 21 -- FIRE SUPPRESSION

2.15 DIVISION 22 -- PLUMBING

A. 220523 - General-Duty Valves for Plumbing Piping
B. 220548 - Vibration and Seismic Controls for Plumbing Piping and Equipment
C. 220553 - Identification for Plumbing Piping and Equipment
D. 220719 - Plumbing Piping Insulation
E. 221006 - Plumbing Piping Specialties
F. 224000 - Plumbing Fixtures

2.16 DIVISION 23 -- HEATING, VENTILATING, AND AIR-CONDITIONING (HVAC)

A. 230593 - Testing, Adjusting, and Balancing for HVAC
B. 230923 - Direct-Digital Control System for HVAC
C. 233423 - HVAC Power Ventilators

2.17 DIVISION 25 -- INTEGRATED AUTOMATION

2.18 DIVISION 26 -- ELECTRICAL

A. 260519 - Low-Voltage Electrical Power Conductors and Cables
B. 260533.13 - Conduit for Electrical Systems
C. 260533.16 - Boxes for Electrical Systems
D. 260923 - Lighting Control Devices

2.19 DIVISION 27 -- COMMUNICATIONS

2.20 DIVISION 28 -- ELECTRONIC SAFETY AND SECURITY

2.21 DIVISION 31 -- EARTHWORK

A. 311000 - Site Clearing
B. 312500 - Erosion and Sedimentation Control

2.22 DIVISION 32 -- EXTERIOR IMPROVEMENTS

A. 321216 - Asphalt Paving
B. 321313 - Concrete Paving
C. 321723.13 - Painted Pavement Markings

D. 323113 - Chain Link Fences and Gates
E. 323119 - Decorative Metal Fences and Gates
F. 323223 - Segmental Retaining Walls

2.23 DIVISION 33 -- UTILITIES

A. 334100 - Subdrainage
B. 334211 - Stormwater Gravity Piping
C. 334230 - Stormwater Drains

2.24 DIVISION 34 -- TRANSPORTATION

2.25 DIVISION 40 -- PROCESS INTEGRATION

2.26 DIVISION 46 -- WATER AND WASTEWATER EQUIPMENT

END OF SECTION 000110

SECTION 024100
DEMOLITION

PART 1 GENERAL

1.01 SECTION INCLUDES

A. Selective demolition of built site elements.

B. Selective demolition of building elements for alteration purposes excluding removal of hazardous materials and toxic substances.

1.02 RELATED REQUIREMENTS

A. Section 003100 - Available Project Information: Existing building survey conducted by Owner; information about known hazardous materials.

B. Section 011000 - Summary: Limitations on Contractor's use of site and premises.

C. Section 011000 - Summary: Sequencing and staging requirements.

D. Section 011000 - Summary: Description of items to be removed by Owner.

E. Section 011000 - Summary: Description of items to be salvaged or removed for re-use by Contractor.

F. Section 015000 - Temporary Facilities and Controls: Site fences, security, protective barriers, and waste removal.

G. Section 016000 - Product Requirements: Handling and storage of items removed for salvage and relocation.

H. Section 017000 - Execution and Closeout Requirements: Project conditions; protection of bench marks, survey control points, and existing construction to remain; reinstallation of removed products; temporary bracing and shoring.

I. Section 017419 - Construction Waste Management and Disposal: Limitations on disposal of removed materials; requirements for recycling.

J. Section 311000 - Site Clearing: Vegetation and existing debris removal; earth stripping and stockpiling.

K. Section 312323 - Fill: Filling holes, pits, and excavations generated as a result of removal operations.

1.03 REFERENCE STANDARDS

A. 29 CFR 1926 - Safety and Health Regulations for Construction.

B. NFPA 241 - Standard for Safeguarding Construction, Alteration, and Demolition Operations.

PART 2 PRODUCTS -- NOT USED

PART 3 EXECUTION

3.01 GENERAL PROCEDURES AND PROJECT CONDITIONS

A. Comply with requirements in Section 017000.

B. Comply with applicable codes and regulations for demolition operations and safety of adjacent structures and the public.
   1. Obtain required permits.
   2. Use of explosives is not permitted.
   3. Take precautions to prevent catastrophic or uncontrolled collapse of structures to be removed; do not allow worker or public access within range of potential collapse of unstable structures.
   4. Provide, erect, and maintain temporary barriers and security devices.
   5. Use physical barriers to prevent access to areas that could be hazardous to workers or the public.

6. Conduct operations to minimize effects on and interference with adjacent structures and occupants.
7. Do not close or obstruct roadways or sidewalks without permits from authority having jurisdiction.
8. Conduct operations to minimize obstruction of public and private entrances and exits. Do not obstruct required exits at any time. Protect persons using entrances and exits from removal operations.
9. Obtain written permission from owners of adjacent properties when demolition equipment will traverse, infringe upon, or limit access to their property.

C. Do not begin removal until receipt of notification to proceed from Owner.

D. Do not begin removal until built elements to be salvaged or relocated have been removed.

E. Do not begin removal until vegetation to be relocated has been removed and vegetation to remain has been protected from damage.

F. Protect existing structures and other elements to remain in place and not removed.
1. Provide bracing and shoring.
2. Prevent movement or settlement of adjacent structures.
3. Stop work immediately if adjacent structures appear to be in danger.

G. Minimize production of dust due to demolition operations. Do not use water if that will result in ice, flooding, sedimentation of public waterways or storm sewers, or other pollution.

H. Provide and maintain daily the effectiveness of dust control walls and required asset protection.

I. Perform demolition in a manner that maximizes salvage and recycling of materials.
1. Comply with requirements of Section 017419 - Construction Waste Management and Disposal.
2. Dismantle existing construction and separate materials.
3. Set aside reusable, recyclable, and salvageable materials; store and deliver to collection point or point of reuse.

J. Partial Removal of Paving and Curbs: Neatly saw cut at right angle to surface.

3.02 EXISTING UTILITIES

A. Coordinate work with utility companies. Notify utilities before starting work, comply with their requirements, and obtain required permits.

B. Protect existing utilities to remain from damage.

C. Do not disrupt public utilities without permit from authority having jurisdiction.

D. Do not close, shut off, or disrupt existing life safety systems that are in use without at least 7 days prior written notification to Owner.

E. Do not close, shut off, or disrupt existing utility branches or take-offs that are in use without at least 3 days prior written notification to Owner.

F. Locate and mark utilities to remain; mark using highly visible tags or flags, with identification of utility type; protect from damage due to subsequent construction, using substantial barricades if necessary.

G. Unused underground piping may be abandoned in place provided it is completely drained and capped unless otherwise indicated; remove exposed piping, valves, meters, equipment, supports, and foundations of disconnected and abandoned utilities.

3.03 SELECTIVE DEMOLITION FOR ALTERATIONS

A. Existing construction and utilities indicated on drawings are based on casual field observation and existing record documents only.
1. Verify construction and utility arrangements are as indicated.
2. Report discrepancies to Architect before disturbing existing installation.
3. Record discrepancies encountered daily on record drawings.

4. Beginning of demolition work constitutes acceptance of existing conditions that would be apparent upon examination prior to starting demolition.

B. Separate areas in which demolition is being conducted from areas that remain occupied.
   1. Provide, erect, and maintain temporary dustproof partitions of construction specified in Section 015000 in locations indicated on drawings.

C. Remove existing work as indicated and required to accomplish new work.
   1. Remove rotted wood, corroded metals, and deteriorated masonry and concrete; replace with new construction indicated.
   2. Remove items indicated on drawings.

D. Services including, but not limited to, HVAC, Plumbing, Fire Protection, Electrical, and Telecommunications: Remove existing systems and equipment as indicated.
   1. Maintain existing active systems to remain in operation, and maintain access to equipment and operational components.
   2. Where existing active systems serve occupied facilities but are to be replaced with new services, maintain existing systems in service until new systems are complete and ready for service.
   3. See Section 011000 - Summary for limitations on outages and required notifications.
   4. Verify that abandoned services serve only abandoned facilities before removal.
   5. Remove abandoned pipe, ducts, conduits, and equipment, including those above accessible ceilings. Remove back to source of supply where possible, otherwise cap stub and tag with identification.

E. Protect existing work to remain.
   1. Prevent movement of structure. Provide shoring and bracing as required.
   2. Perform cutting to accomplish removal work neatly and as specified for cutting new work.
   3. Repair adjacent construction and finishes damaged during removal work.
   4. Patch to match new work.

F. Protect items to be salvaged by the Owner or reused in the Work by the Contractor.

3.04 DEBRIS AND WASTE REMOVAL

A. Remove debris, junk, and trash from site daily as it accumulates. Do not use the Owner's dumpsters.

B. Remove materials not to be reused on site; comply with requirements of Section 017419 - Waste Management.

C. Leave site in clean condition, ready for subsequent work.

D. Clean up spillage and wind-blown debris from public and private lands.

END OF SECTION 024100

SECTION 028213
REMOVAL OF ASBESTOS CONTAINING MATERIALS

PART 1 GENERAL

1.01 RELATED WORK SPECIFIED ELSEWHERE

A. Installation of Critical and Primary Barriers, and Work Area Isolation Procedures are set forth in Section 015643 Temporary Enclosures.

B. Project Decontamination procedures after removal of the Secondary Barrier are specified in Section 017333 Project Decontamination.

C. Disposal of asbestos-containing waste is specified in Section 028233 Disposal of Asbestos Containing Waste Material.

1.02 SUBMITTALS

A. Before the Start of Work: Submit the following to the Owner for review. No work shall begin until these submittals provided:
   1. Surfactant: Submit product data, use instructions and recommendations from manufacturer of surfactant intended for use. Include data substantiating that material complies with requirements.
   2. Material Safety Data Sheet: Submit the Material Safety Data Sheet, or equivalent, in accordance with the OSHA Hazard Communication Standard (29 CFR 1910.1200) for each surfactant, encapsulating material and solvent proposed for use on the work. Include a separate attachment for each sheet indicating the specific worker protective equipment proposed for use with the material indicated.
   3. Glovebags: Submit product data.
   4. Mini-Enclosures: Submit sketch of mini-enclosure arrangement to be used.

PART 2 PRODUCTS

2.01 WETTING MATERIALS

A. For wetting prior to disturbance of Asbestos-Containing Materials use amended water:
   1. Amended Water: Provide water to which a surfactant has been added. Use a mixture of surfactant and water which results in wetting of the Asbestos-Containing Material and retardation of fiber release during disturbance of the material equal to or greater than that provided by the use of one ounce of a surfactant consisting of 50% polyoxyethylene ester and 50% polyoxyethylene ether mixed with five gallons of water.

2.02 POLYETHYLENE SHEET

A. Polyethylene Sheet: A single polyethylene film in the largest sheet size practicable to minimize seams, 6.0 mil (0.15 mm) thick clear, frosted, or black as indicated.

B. Provide flame resistant polyethylene film that conforms to requirements set forth by the National Fire Protection Association Standard 701, Small Scale Fire Test for Flame-resistant Textiles and Films.

2.03 DUCT TAPE

A. Provide duct tape in 2" or 3" widths as indicated, with an adhesive which is formulated to stick aggressively to sheet polyethylene.

2.04 SPRAY CEMENT

A. Provide spray adhesive in aerosol cans which is specifically formulated to stick tenaciously to sheet polyethylene.

2.05 DISPOSAL BAGS

A. Provide 6 mil thick leak-tight polyethylene bags labeled as required by Section 028233 Disposal of Asbestos Containing Waste Material.

2.06 FIBERBOARD DRUMS

A. Provide heavy duty leak tight fiberboard drums with tight sealing locking metal tops.

2.07 PAPER BOARD BOXES

A. Provide heavy duty corrugated paper board boxes coated with plastic or wax to retard deterioration from moisture.

B. Provide in sizes that will easily fit in disposal bags.

2.08 FELT

A. Standard felt approximately 1/16" thick and 36" to 72" in width.

PART 3 EXECUTION

3.01 WORKER PROTECTION

A. Before beginning work with any material for which a Safety Data Sheet has been submitted provide workers with the required protective equipment.

B. Require that appropriate protective equipment be used at all times.

3.02 WET REMOVAL

A. Thoroughly wet to satisfaction of Owner, Asbestos-Containing Materials to be removed prior to stripping and/or tooling to reduce fiber dispersal into the air. Accomplish wetting by a fine spray (mist) of amended water. Saturate material sufficiently to wet to the substrate without causing excess dripping. Allow time for amended water to penetrate material thoroughly. Spray material repeatedly during the work process to maintain a continuously wet condition. Perforate outer covering of any installation which has been painted and/or jacketed in order to allow penetration of amended water or use injection equipment to wet material under the covering. Where necessary, carefully strip away while simultaneously spraying amended water on the installation to minimize dispersal of asbestos fibers into the air.

B. Mist work area continuously with amended water whenever necessary to reduce airborne fiber levels.

C. Remove saturated Asbestos-Containing Material in small sections from all areas. Do not allow material to dry out. As it is removed, simultaneously pack material while still wet into disposal bags. Evacuate air from disposal bags with a HEPA filtered vacuum cleaner before sealing. Twist neck of bags, bend over and seal with minimum three wraps of duct tape. Clean outside and move to Wash Down Station adjacent to Material Decontamination Unit.

D. Removal requirements for specific materials: Floor tile and mastic, Full containment

3.03 MINI-ENCLOSURES

A. A Mini-Enclosure consists of a small Work Room with an attached separate Change Room. Worker decontamination requires a remote personnel decontamination unit.

B. Complete requirement of the following:
   1. Section 015733 Worker Protection
   2. Section 015736 Respiratory Protection

C. Sequence of Work: Before beginning work of this sub-section complete the following:
   1. Comply with all applicable OSHA Class I removal procedures, including supervision by a competent person as defined by the regulation, wet removal methods, and use of HEPA filtered vacuums.
   2. Construct a personnel decontamination unit in accordance with Section 015726 Decontamination Units.
   3. Cordon off the work zone within which the mini-enclosure will be installed with barrier tape and post signs at all entrances.
   4. Shut down HVAC system to the general area in which the mini-enclosure will be constructed or otherwise minimize air flow within the area.

D. Work Room: Utilize a prefabricated or construct Work Room in the same manner as a Primary Barrier fabricated from 6 mil sheet plastic. Line walls and floor of the Work Room with a continuous Secondary Barrier.

E. Change Room: Provide an approximately 3'-0" by 3' -0" Change Room attached to Work Room. Fabricate Change Room from 6 mil sheet plastic in the same manner as a Primary Barrier. Locate so that access to Work Area is though Change Room.

F. Step Off Area: Cover floor in front of entry to Change Room with one layer of 6 mil sheet plastic. Securely anchor sheet plastic to prevent slipping.

G. Flapped Door Construction: Provide flapped door as entry to Change Room and entry from Change Room to Work Room. Fabricate each flapped door from overlapping contacting layers of sheet plastic. Fasten each layer on the top and one side. Reinforce free side and bottom of each sheet with duct tape. Alternate sides that are fastened on each layer. Form arrows pointing to entry side from duct tape on inside and outside of door.

H. Signage: At entry to Change Room post an approximately 20 inch by 14 inch manufactured caution sign displaying the following legend with letter sizes and styles of a visibility required by 29 CFR 1926.1101:

I. Entry to Work Room: Require that any time a worker enters the Work Room the following procedure is followed:
   1. Outside of Change Room remove all street clothes and don clean coveralls and respirator. A swim suit or second disposable suite may be worn beneath outer coveralls.
   2. Enter Change Room by sure that entry is completely closed.
   3. Enter Work Room be sure the entry is completely closed.

J. Worker Decontamination: Require that any time a worker leaves the mini-enclosure the following procedure be followed:
   1. Maintain a bucket of clean potable water in the Change Room. Do not amend with a wetting agent.
   2. Do not allow debris in work area to dry or accumulate. HEPA vacuum debris from floor prior to beginning exit procedures.
   3. HEPA vacuum gross debris from disposable suit and foot coverings inside the Work Area. Leave respirator in place.
   4. Proceed with respirator in place to Change Room.
   5. Be sure the entry to Work area is completely closed.
   6. Wash hands, face and surface of respirator with water and wet paper towels. Use caution to avoid breaking seal between respirator face-piece and face.
   7. In Change Room don clean disposable suit leaving respirator in place.
   8. Exit change room, be sure the entry to Change Room is completely closed. Proceed to next Mini-Enclosure, or a remote shower.
   9. At end of work day decontaminate fully in accordance with procedures in section "Worker Protection".

K. Material Decontamination: Require that the following procedure be used in removing equipment and bagged debris from the Work Room:
   1. Worker in Work Room cleans equipment and bagged debris and hands one piece of equipment of one bag of debris at a time to worker in Change Room.
   2. Worker in Change Room wet cleans each piece of equipment or bag. Equipment is sealed completely in 6 mil sheet plastic or bags in the Change Room and passed through the flapped door to the Step Off Area. Bagged waste is placed in a second clean disposal bag and passed to the Step Off Area. Ensure that only one of the two flapped doorways is open at any given time.
   3. Each bag is immediately placed in a sellable cart for transport to the load out area. No bags are to be stored outside of the Mini-Enclosure.

4. All bag are to be transported through the building in clean sealed containers that have never been in an asbestos Work Area, Mini-Enclosure of decontamination unit.

L. Mini-Enclosure Decontamination: At completion of all Work decontaminate the Work and Changing Rooms as set forth in Section 017333 Project Decontamination.

END OF SECTION 028213

SECTION 028233
DISPOSAL OF ASBESTOS CONTAINING WASTE MATERIALS

PART 1 GENERAL

1.01 RELATED DOCUMENTS

A. Section 014113 Asbestos Abatement Codes, Regulations and Standards - Asbestos Abatement describes applicable federal, state and local regulations.

1.02 DESCRIPTION OF THE WORK

A. This section describes the disposal of Asbestos-Containing Materials. Disposal includes packaging of asbestos-containing waste materials. Disposal may be accomplished either by land filling or converting asbestos containing materials to non-asbestos waste.

1.03 SUBMITTALS

A. Before Start of Work: Submit the following to the Owner for review. Do not start work until these submittals are returned with Owner's approval indicating that the submittal is returned for unrestricted use.
   1. Copy of state or local license for waste hauler.
   2. Name and address of landfill where asbestos-containing waste materials are to be buried. Include contact person and telephone number.

B. Submit copies of all manifests and disposal site receipts to Owner prior to project close-out.

PART 2 PRODUCTS

2.01 DISPOSAL BAGS

2.02 FIRST LABEL:

A. Provide in accordance with 29 CFR 1910.1200(f) of OSHA's Hazard Communication standard with NESHAP additions:

DANGER
CONTAINS ASBESTOS FIBERS
MAY CAUSE CANCER
CAUSES DAMAGE TO LUNGS
AVOID CREATING DUST

2.03 SECOND LABEL:

A. Provide in accordance with U. S. Department of Transportation regulation on hazardous waste marking. 49 CFR parts 171 and 172. Hazardous Substances: Final Rule. Published November 21, 1986 and revised October 21, 1991:

RQ ASBESTOS
NA 2212, III

2.04 THIRD LABEL:

A. Affix to asbestos waste containers a label in accordance with National Emission Standard for Hazardous Air Pollutants (NESHAP) 40 CFR Part 61, Subpart M, Section 61.150(a)(1)(v), published November 20, 1990, that includes owners name, address of where asbestos waste was generated, and the name and address of asbestos abatement contractor.

PART 3 EXECUTION

3.01 COMPLY WITH THE FOLLOWING SECTIONS DURING ALL PHASES OF THIS WORK:

A. Section 015733 Worker Protection - Asbestos Abatement

B. Section 015736 Respiratory Protection

3.02 GENERAL

A. All waste is to be hauled by a waste hauler with all required licenses from all state and local authority with jurisdiction.

B. Seal asbestos waste in leak-proof impermeable containers labeled in accordance with Title 29, Code of Federal Regulations, Section 1910.1200 (f).

C. Protect interior of truck or dumpster with Critical and Primary Barriers as described in Section 015643 Temporary Enclosures.

D. Carefully load containerized waste in fully enclosed dumpsters, trucks or other appropriate vehicles for transport. Exercise care before and during transport, to insure that no unauthorized persons have access to the material. Vehicle must be placarded with DOT label.

E. Take containers from the Work Area directly to a sealed truck or dumpster.

F. Do not transport disposal bagged materials on open trucks. Double bagged material may be transported on open trucks if they are first loaded in sealed drums. Label drums with same warning labels as bags. Uncontaminated drums may be reused. Treat drums that have been contaminated as asbestos-containing waste and dispose of in accordance with this specification.

G. Advise the landfill operator or processor, in advance of transport, of the quantity of material to be delivered.

H. At disposal site unload containerized waste:
   1. At a disposal site, sealed plastic bags may be carefully unloaded from the truck. If bags are broken or damaged, return to work site for rebagging. Clean entire truck and contents which have been in contact with containerized waste, using procedures set forth in Section 017333 Project Decontamination.
   2. Ensure that no visible emissions are released to the outside air from sealed plastic bags or impermeable containers while transporting or handling at the site where materials and waste are deposited.

I. Retain receipts from landfill or processor for materials disposed of.

J. At completion of project, submit copies of waste manifests to Owner and Owner's Representative.

END OF SECTION 028233

SECTION 028236
REMOVAL OF CLASS II ASBESTOS CONTAINING MATERIALS

PART 1 GENERAL

1.01 APPLICABILITY

A. This section applies to Class II work as defined by OSHA 29 CFR 1926.1101 and means activities involving the removal of asbestos-containing materials (ACM), which is not thermal system insulation (TSI) or surfacing material. This includes, but is not limited to, the removal of asbestos-containing wallboard, floor tile and sheeting, roofing, siding, shingles, and construction mastics.

1.02 RELATED WORK SPECIFIED ELSEWHERE

A. Supervision by a competent person is specified in Section 013000 Administrative Requirements.

B. Installation of critical barriers is set forth in Section 015643 Temporary Enclosures.

C. Project decontamination procedures after removal are specified in Section 017333 Project Decontamination.

D. Disposal of asbestos-containing waste is specified in Section 028233 Disposal of Asbestos Containing Waste Material.

1.03 SUBMITTALS

A. Before the Start of Work: Submit the following to the Owner for review. No work shall begin until these submittals provided:
   1. Adhesive Removal Solvent: Submit product data, use instructions and recommendations from manufacturer of adhesive removal solvent intended for use.
   2. Include data substantiating that material complies with requirements.

PART 2 PRODUCTS

2.01 WETTING MATERIALS

A. For wetting prior to disturbance of Asbestos-Containing Materials use amended water:
   1. Amended Water: Provide water to which a surfactant has been added. Use a mixture of surfactant and water which results in wetting of the Asbestos-Containing Material and retardation of fiber release during disturbance of the material equal to or greater than that provided by the use of one ounce of a surfactant consisting of 50% polyoxyethylene ester and 50% polyoxyethylene ether mixed with five gallons of water.

2.02 POLYETHYLENE SHEET

A. Provide polyethylene film in the largest size possible to minimize seams, 4 or 6 mil thick as indicated, frosted or black as indicated.

2.03 DUCT TAPE

A. Provide duct tape in 2" or 3" widths as indicated, with an adhesive which is formulated to stick aggressively to sheet polyethylene.

2.04 SPRAY CEMENT

A. Provide spray adhesive in aerosol cans that is specifically formulated to stick tenaciously to sheet polyethylene.

2.05 DISPOSAL BAGS

2.06 ADHESIVE REMOVAL SOLVENT

A. Provide a slow-drying solvent intended to remove tile adhesive.

B. Provide material that is not flammable, does not create combustible vapors and has no significant inhalation hazard.

PART 3 EXECUTION

3.01 ALL CLASS II WORK

A. Competent Person: All Class II work shall be supervised by a competent person as defined by the regulation.

B. Critical Barriers: Critical barriers shall be placed over all openings to the regulated area or utilize an alternative barrier or isolation method that prevents migration of airborne asbestos from the regulated area and meets the requirements of the regulation.

C. Impermeable Dropcloths: Impermeable dropcloths shall be placed on surfaces beneath all removal activity. Dropcloths shall extend horizontally in all directions one foot for every vertical foot the work surface is above the floor.

D. Comply with the work practices specified for each type of Class II asbestos work being performed as outlined in the following sections.

E. HEPA Filtration: Vacuums, powered saws and other equipment that may generate asbestos fibers shall be equipped with HEPA-filtered exhausts.

F. Wet Methods: Wet methods or wetting agents to control employee exposures shall be employed.

G. OSHA requires the prompt cleanup of wastes and debris and placement in leak-tight containers and labeled with the following information:

H. Establish a decontamination area that is adjacent to the regulated area for decontamination of employees and their equipment. At a minimum the decontamination area shall consist of an airlock chamber and an area covered by an impermeable drop cloth on the floor or horizontal working surface of sufficient size to accommodate cleaning of equipment and removing personal protective equipment without spreading contamination. Work clothes must be cleaned with a HEPA vacuum before clothes are removed. All equipment and surfaces of containers filled with ACM must be cleaned prior to removing them from the equipment room or area. Entry to and exit from the regulated area shall be through the decontamination area.

3.02 VINYL AND ASPHALT FLOORING MATERIALS

A. Before beginning work with any material for which a Safety Data Sheet has been submitted provide workers with the required protective equipment. Require that appropriate protective equipment be used at all times.

B. Flooring or its backing shall not be sanded.

C. Vacuums equipped with HEPA filter, disposable dust bag, and metal floor tool (no brush) shall be used to clean floors.

D. Resilient sheeting shall be removed by cutting with wetting of the snip point and wetting during delamination.

E. Rip-up of resilient sheet floor material is prohibited unless performed in a negative pressure enclosure.

F. All scraping of residual adhesive and/or backing shall be performed using wet methods.

G. Dry sweeping is prohibited.

H. Mechanical chipping is prohibited unless performed in a negative pressure enclosure.

I. Tiles shall be removed intact, unless the contractor demonstrates that intact removal is not possible.

J. When tiles can be heated and can be removed intact, wetting may be omitted.

K. Removal of vinyl and asphalt sheet flooring materials shall include all flooring mastics and/or adhesives. Contractor shall only use solvents that have been approved by Owner.

L. Removal of vinyl and asphalt sheet flooring materials shall include all floor fillers and/or leveling compounds.
   1. If floor filler and/or leveling material is encountered underneath the flooring materials, the floor filler and/or leveling material shall be removed with the same requirements as the flooring materials and shall be considered a changed condition if the quantity exceeds the assumed amount included in the NTE form.

END OF SECTION 028236

SECTION 030100
MAINTENANCE OF CONCRETE

PART 1 GENERAL

1.01 SECTION INCLUDES

A. Cleaning of existing concrete surfaces.

B. Repair of exposed structural, shrinkage, and settlement cracks.

C. Scope of Work: As indicated on drawings.

1.02 RELATED REQUIREMENTS

A. Section 033000 - Cast-in-Place Concrete: Finishing of concrete surface to tolerance; floating, troweling, and similar operations; curing.

1.03 REFERENCE STANDARDS

A. ASTM C33/C33M - Standard Specification for Concrete Aggregates.

B. ASTM C150/C150M - Standard Specification for Portland Cement.

C. ASTM C404 - Standard Specification for Aggregates for Masonry Grout.

1.04 SUBMITTALS

A. See Section 013000 - Administrative Requirements, for submittal procedures.

B. Product Data: Indicate product standards, physical and chemical characteristics, technical specifications, limitations, maintenance instructions, and general recommendations regarding each material.

C. Project Record Documents: Accurately record actual locations of structural reinforcement repairs and type of repair.

1.05 QUALITY ASSURANCE

A. Manufacturer Qualifications: Company specializing in manufacturing products specified in this section, with not less than three years of documented experience.

B. Cleaner Qualifications: Company specializing in, and with minimum of 3 years of experience in, the type of cleaning specified.

C. Installer Qualifications: Company specializing in performing work of the type specified and with minimum of 3 years of documented experience.

1.06 DELIVERY, STORAGE, AND HANDLING

A. Comply with manufacturers' instructions for storage, shelf life limitations, and handling of products.

PART 2 PRODUCTS

2.01 CLEANING MATERIALS

A. Degreaser:
   1. Manufacturers:
      a. LATICRETE International, Inc; CITREX: www.laticrete.com/#sle.
      b. SpecChem, LLC; Orange Peel-Citrus Cleaner: www.specchemllc.com/#sle.
      c. W. R. Meadows, Inc: www.wrmeadows.com/#sle.
      d. Substitutions: See Section 016000 - Product Requirements.

B. Detergent: Non-ionic detergent.

2.02 CEMENTITIOUS PATCHING AND REPAIR MATERIALS

A. Finish: Repairs, cleanings, etc. materials shall be reviewed for the need for finish. Finish of new or repaired work shall match the color of adjoining concrete.

B. Manufacturers:

1. Adhesives Technology Corporation: www.atcepoxy.com/#sle.
2. ARDEX Engineered Cements: www.ardexamericas.com/#sle.
3. Dayton Superior Corporation: www.daytonsuperior.com/#sle.
4. Kaufman Products Inc: www.kaufmanproducts.net/#sle.
5. The QUIKRETE Companies: www.quikrete.com/#sle.
6. SpecChem, LLC: www.specchemllc.com/#sle.
7. Stauf USA LLC: www.staufusa.com/#sle.
8. W. R. Meadows, Inc: www.wrmeadows.com/#sle.
9. Substitutions: See Section 016000 - Product Requirements.

2.03 EPOXY PATCHING AND REPAIR MATERIALS

A. Manufacturers:
   1. Dayton Superior Corporation: www.daytonsuperior.com/#sle.
   2. Kaufman Products Inc.: www.kaufmanproducts.net/#sle.
   3. SpecChem, LLC: www.specchemllc.com/#sle.
   4. Sto Corp: www.stocorp.com/#sle.
   5. W. R. Meadows, Inc: www.wrmeadows.com/#sle.
   6. Substitutions: See Section 016000 - Product Requirements.

B. Epoxy Injection Adhesive:
   1. Manufacturers:
      a. Dayton Superior Corporation: www.daytonsuperior.com/#sle.
      b. Kaufman Products Inc; SurePoxy HM, SurePoxy HMLV, SurePoxy HMLV Class B, or SurePoxy HMSLV: www.kaufmanproducts.net/#sle.
      c. SpecChem, LLC; SpecPoxy 1000; www.specchemllc.com/#sle.
      d. W. R. Meadows, Inc; Rezi-Weld LV, Rezi-Weld LV State, Rezi-Weld (IP), or Rezi-Weld Gel Paste: www.wrmeadows.com/#sle.
      e. Substitutions: See Section 016000 - Product Requirements.

2.04 ACCESSORIES

A. Anchoring Adhesive: Self-leveling or non-sag as applicable.

B. Portland Cement: ASTM C150/C150M, Type I, grey.

C. Sand: ASTM C33/C33M or ASTM C404; uniformly graded, clean.

D. Water: Clean and potable.

PART 3 EXECUTION

3.01 EXAMINATION

A. Verify that surfaces are ready to receive work.

B. Beginning of installation means acceptance of substrate.

3.02 CLEANING EXISTING CONCRETE

A. Clean concrete surfaces of dirt or other contamination using the gentlest method that is effective.
   1. Try the gentlest method first, then, if not clean enough, use a less gentle method taking care to watch for impending damage.
   2. Clean out cracks and voids using same methods.

B. The following are acceptable cleaning methods, in order from gentlest to less gentle:
   1. Water washing using low-pressure, maximum of 100 psi, and, if necessary, brushes with natural or synthetic bristles.
   2. Increasing the water washing pressure to maximum of 400 psi.
   3. Adding detergent to washing water; with final water rinse to remove residual detergent.
   4. Steam-generated low-pressure hot-water washing.

3.03 CRACK REPAIR USING EPOXY ADHESIVE INJECTION

A. Repair exposed cracks.

B. Provide temporary entry ports spaced to accomplish movement of fluids between ports; no deeper than the depth of the crack to be filled or port size diameter no greater than the thickness of the crack. Provide temporary seal at concrete surface to prevent leakage of adhesive.

C. Inject adhesive into ports under pressure using equipment appropriate for particular application.

D. Begin injection at lower entry port and continue until adhesive appears in adjacent entry port. Continue from port to port until entire crack is filled.

E. Remove temporary seal and excess adhesive.

F. Clean surfaces adjacent to repair and blend finish.

END OF SECTION 030100

SECTION 032000
CONCRETE REINFORCING

PART 1 GENERAL

1.01 SECTION INCLUDES

A. Reinforcing steel for cast-in-place concrete.

B. Supports and accessories for steel reinforcement.

1.02 RELATED REQUIREMENTS

1.03 REFERENCE STANDARDS

A. ACI MNL-66 - ACI Detailing Manual.

B. ACI SPEC-301 - Specifications for Concrete Construction.

C. ASTM A1035/A1035M - Standard Specification for Deformed and Plain, Low-Carbon, Chromium, Steel Bars for Concrete Reinforcement.

D. ASTM A1064/A1064M - Standard Specification for Carbon-Steel Wire and Welded Wire Reinforcement, Plain and Deformed, for Concrete.

1.04 SUBMITTALS

A. See Section 013000 - Administrative Requirements, for submittal procedures.

B. Shop Drawings: Comply with requirements of ACI MNL-66 Include bar schedules, shapes of bent bars, spacing of bars, and location of splices.
   1. Prepare shop drawings under seal of a Professional Structural Engineer experienced in design of work of this type and licensed in the State in which the Project is located.

C. Manufacturer's Certificate: Certify that reinforcing steel and accessories supplied for this project meet or exceed specified requirements.

D. Reports: Submit certified copies of mill test report of reinforcement materials analysis.

1.05 QUALITY ASSURANCE

A. Perform work of this section in accordance with ACI SPEC-301.

PART 2 PRODUCTS

2.01 REINFORCEMENT

A. Reinforcing Steel: Plain or deformed bars; ASTM A1035/A1035M, Grade 100 (100,000 psi), Type CL.

B. Steel Welded Wire Reinforcement (WWR): Galvanized, deformed type; ASTM A1064/A1064M.
   1. Form: Flat Sheets.
   2. WWR Style: As indicated on drawings.

C. Reinforcement Accessories:
   1. Chairs, Bolsters, Bar Supports, Spacers: Sized and shaped for adequate support of reinforcement during concrete placement.
   2. Provide stainless steel components for placement within 1-1/2 inches of weathering surfaces.

2.02 FABRICATION

A. Locate reinforcing splices not indicated on drawings at point of minimum stress.

PART 3 EXECUTION

3.01 PLACEMENT

A. Place, support and secure reinforcement against displacement. Do not deviate from required position.

B. Accommodate placement of formed openings.

C. Maintain concrete cover around reinforcing as follows:

D. Comply with applicable code for concrete cover over reinforcement.

3.02 FIELD QUALITY CONTROL

A. An independent testing agency, as specified in Section 014000 - Quality Requirements, will inspect installed reinforcement for compliance with contract documents before concrete placement.

END OF SECTION 032000

SECTION 033000
CAST-IN-PLACE CONCRETE

PART 1 GENERAL

1.01 SECTION INCLUDES

A. Elevated concrete slabs.

B. Floors and slabs on grade.

C. Joint devices associated with concrete work.

D. Concrete curing.

1.02 REFERENCE STANDARDS

A. ACI CODE-318 - Building Code for Structural Concrete—Code Requirements and Commentary.

B. ACI PRC-211.1 - Selecting Proportions for Normal-Density and High Density-Concrete - Guide.

C. ACI PRC-302.1 - Guide to Concrete Floor and Slab Construction.

D. ACI PRC-304 - Guide for Measuring, Mixing, Transporting, and Placing Concrete.

E. ACI PRC-305 - Guide to Hot Weather Concreting.

F. ACI PRC-306 - Guide to Cold Weather Concreting.

G. ACI PRC-308 - Curing of Concrete—Guide.

H. ACI SPEC-301 - Specifications for Concrete Construction.

I. ASTM C33/C33M - Standard Specification for Concrete Aggregates.

J. ASTM C39/C39M - Standard Test Method for Compressive Strength of Cylindrical Concrete Specimens.

K. ASTM C94/C94M - Standard Specification for Ready-Mixed Concrete.

L. ASTM C143/C143M - Standard Test Method for Slump of Concrete.

M. ASTM C685/C685M - Standard Specification for Concrete Made by Volumetric Batching and Continuous Mixing.

N. ASTM C881/C881M - Standard Specification for Epoxy-Resin-Base Bonding Systems for Concrete.

O. ASTM C1059/C1059M - Standard Specification for Latex Agents for Bonding Fresh to Hardened Concrete.

P. ASTM E1643 - Standard Practice for Selection, Design, Installation, and Inspection of Water Vapor Retarders Used in Contact with Earth or Granular Fill Under Concrete Slabs.

Q. ASTM E1745 - Standard Specification for Plastic Water Vapor Retarders Used in Contact with Soil or Granular Fill under Concrete Slabs.

1.03 SUBMITTALS

A. See Section 013000 - Administrative Requirements for submittal procedures.

B. Product Data: Submit manufacturers' data on manufactured products showing compliance with specified requirements and installation instructions.

C. Mix Design: Submit proposed concrete mix design.
   1. Indicate proposed mix design complies with requirements of ACI SPEC-301, Section 4 - Concrete Mixtures.
   2. Indicate proposed mix design complies with requirements of ACI CODE-318, Chapter 5 - Concrete Quality, Mixing and Placing.

D. Test Reports: Submit report for each test or series of tests specified.

E. Project Record Documents: Accurately record actual locations of embedded utilities and components that will be concealed from view upon completion of concrete work.

F. Warranty: Submit manufacturer warranty and ensure forms have been completed in Owner's name and registered with manufacturer.

1.04 QUALITY ASSURANCE

A. Perform work of this section in accordance with ACI SPEC-301 and ACI CODE-318.

B. Follow recommendations of ACI PRC-305 when concreting during hot weather.

C. Follow recommendations of ACI PRC-306 when concreting during cold weather.

1.05 WARRANTY

A. See Section 017800 - Closeout Submittals for additional warranty requirements.

PART 2 PRODUCTS

2.01 FORMWORK

A. Comply with requirements of Section 031000.

2.02 REINFORCEMENT MATERIALS

A. Comply with requirements of Section 032000.

B. Cement: ASTM C150/C150M, Type IL - Limestone Portland type.
   1. Acquire cement for entire project from same source.

C. Fine and Coarse Aggregates: ASTM C33/C33M.
   1. Acquire aggregates for entire project from same source.

2.03 ACCESSORY MATERIALS

A. Underslab Vapor Retarder: Multi-layer, fabric-, cord-, grid-, or aluminum-reinforced polyethylene or equivalent, complying with ASTM E1745, Class A; stated by manufacturer as suitable for installation in contact with soil or granular fill under concrete slabs. The use of single ply polyethylene is prohibited.
   1. Accessory Products: Vapor retarder manufacturer's recommended tape, adhesive, mastic, prefabricated boots, etc., for sealing seams and penetrations.
   2. Products:
      a. Henry Company; Moistop Ultra 15: www.henry.com/#sle.
      b. ISI Building Products; Viper VaporCheck II 15-mil (Class A): www.isibp.com/#sle.
      c. Stego Industries, LLC: www.stegoindustries.com.
      d. W. R. Meadows, Inc; PERMINATOR Class A - 10 mils (0.25 mm): www.wrmeadows.com/#sle.

2.04 BONDING AND JOINTING PRODUCTS

A. Latex Bonding Agent: Non-redispersable acrylic latex, complying with ASTM C1059/C1059M, Type II.
   1. Products:
      a. Kaufman Products Inc; SureBond: www.kaufmanproducts.net/#sle.
      b. Kaufman Products Inc; SureWeld: www.kaufmanproducts.net/#sle.
      c. SpecChem, LLC; Strong Bond Acrylic Bonder: www.specchemllc.com/#sle.
      d. W. R. Meadows, Inc; ACRY-LOK: www.wrmeadows.com/#sle.
      e. Euclid Chemical Company; ProdTamms Tammsweld: www.tamms.com.
      f. Substitutions: See Section 016000 - Product Requirements.

B. Epoxy Bonding System:
   1. Products:
      a. Dayton Superior Corporation: www.daytonsuperior.com/#sle.
      b. Kaufman Products Inc; SurePoxy HM EPL: www.kaufmanproducts.net/#sle.
      c. Kaufman Products Inc; SurePoxy HM Class B: www.kaufmanproducts.net/#sle.

d. SpecChem, LLC; SpecPoxy 1000, SpecPoxy 2000, SpecPoxy 3000, or SpecPoxy 3000FS: www.specchemllc.com/#sle.
e. W. R. Meadows, Inc; Rezi-Weld Gel Paste, Rezi-Weld Gel Paste State, Rezi-Weld 1000: www.wrmeadows.com/#sle.
f. Fox Industries Inc.: www.foxind.com.
g. Substitutions: See Section 016000 - Product Requirements.

2.05 CONCRETE MIX DESIGN

A. Proportioning Normal Weight Concrete: Comply with ACI PRC-211.1 recommendations.

B. Concrete Strength: Establish required average strength for concrete on the basis of field experience or trial mixtures, as specified in ACI 301.

C. Normal Weight Concrete:
1. Compressive Strength, when tested in accordance with ASTM C39/C39M at 28 days: 4,000 pounds per square inch.
2. Water-Cement Ratio: Maximum 40 percent by weight.
3. Maximum Slump: 4 inches +/- 1 inc
4. Maximum Aggregate Size: 5/8 inch.

2.06 MIXING

A. On Project Site: Mix in drum type batch mixer, complying with ASTM C685/C685M. Mix each batch not less than 1-1/2 minutes and not more than 5 minutes.

B. Transit Mixers: Comply with ASTM C94/C94M.

C. Adding Water: If concrete arrives on-site with slump less than suitable for placement, do not add water that exceeds the maximum water-cement ratio or exceeds the maximum permissible slump.

PART 3 EXECUTION

3.01 EXAMINATION

A. Verify lines, levels, and dimensions before proceeding with Work of this section.

B. Verify requirements for concrete cover over reinforcement

C. Verify anchors, seats, plates, reinforcement and other items to be cast into concrete are accurately placed, positioned securely, and will not interfere with placing concrete.

D. Commencement of Work shall indicate acceptance of existing conditions.

3.02 PREPARATION

A. Where new concrete is to be bonded to previously placed concrete, prepare existing surface by cleaning and applying bonding agent in according to bonding agent manufacturer's instructions.
1. Use epoxy bonding system for bonding to damp surfaces, for structural load-bearing applications, and where curing under humid conditions is required.
2. Use latex bonding agent only for non-load-bearing applications.

B. Interior Slabs on Grade: Install vapor retarder under interior slabs on grade. Comply with ASTM E1643. Lap joints minimum 6 inches. Seal joints, seams and penetrations watertight with manufacturer's recommended products and follow manufacturer's written instructions. Repair damaged vapor retarder before covering.
1. Granular Fill Over Vapor Retarder: Cover vapor retarder with compactible granular fill as indicated on drawings. Do not use sand.

3.03 PLACING CONCRETE

A. Place concrete in accordance with ACI PRC-304.

B. Notify Architect not less than 24 hours prior to commencement of placement operations.

C. Maintain records of concrete placement. Record date, location, quantity, air temperature, and test samples taken.

D. Ensure reinforcement will not be disturbed during concrete placement.

E. Place concrete continuously without construction (cold) joints wherever possible; where construction joints are necessary, before next placement prepare joint surface by removing laitance and exposing the sand and sound surface mortar, by sandblasting or high-pressure water jetting.

3.04 FLOOR FLATNESS AND LEVELNESS TOLERANCES

A. An independent testing agency, as specified in Section 014000, will inspect finished slabs for compliance with specified tolerances.

B. Maximum Variation of Surface Flatness:
   1. Exposed Concrete Floors: 1/8 inch in 10 feet.
   2. Under Seamless Resilient Flooring: 1/8 inch in 10 feet.
   3. Under Carpeting: 1/8 inch in 10 feet.
   4. Tennis Courts: 1/8 inch in 10 feet

C. Correct the slab surface if tolerances are less than specified.

D. Correct defects by grinding or by removal and replacement of the defective work. Areas requiring corrective work will be identified. Re-measure corrected areas by the same process.

3.05 CONCRETE FINISHING

A. Concrete Slabs: Finish to requirements of ACI PRC-302.1 and as follows:
   1. Surfaces to Receive Thin Floor Coverings: "Steel trowel" as described in ACI PRC-302.1; thin floor coverings include carpeting, resilient flooring, seamless flooring, resinous matrix terrazzo, thin set quarry tile, and thin set ceramic tile.
   2. Decorative Exposed Surfaces: Trowel as described in ACI PRC-302.1; take measures necessary to avoid black-burnish marks; decorative exposed surfaces include surfaces to be stained or dyed, pigmented concrete, surfaces to receive liquid hardeners, surfaces to receive dry-shake hardeners, surfaces to be polished, and all other exposed slab surfaces.

3.06 CURING AND PROTECTION

A. Comply with requirements of ACI PRC-308. Immediately after placement, protect concrete from premature drying, excessively hot or cold temperatures, and mechanical injury.

B. Maintain concrete with minimal moisture loss at relatively constant temperature for period necessary for hydration of cement and hardening of concrete.
   1. Normal concrete: Not less than seven days.
   2. High early strength concrete: Not less than four days.

3.07 FIELD QUALITY CONTROL

A. An independent testing agency will perform field quality control tests, as specified in Section 014000 - Quality Requirements.

B. Provide free access to concrete operations at project site and cooperate with appointed firm.

C. Submit proposed mix design of each class of concrete to inspection and testing firm for review prior to commencement of concrete operations.

D. Tests of concrete and concrete materials may be performed at any time to ensure compliance with specified requirements.

E. Compressive Strength Tests: ASTM C39/C39M, for each test, mold and cure three concrete test cylinders. Obtain test samples for every 50 cubic yards or less of each class of concrete placed.

F. Take one additional test cylinder during cold weather concreting, cured on job site under same conditions as concrete it represents.

G. Perform one slump test for each set of test cylinders taken, following procedures of ASTM C143/C143M.

3.08 DEFECTIVE CONCRETE

A. Test Results: The testing agency shall report test results in writing to Architect and Contractor within 24 hours of test.

B. Defective Concrete: Concrete not complying with required lines, details, dimensions, tolerances or specified requirements.

C. Repair or replacement of defective concrete will be determined by the Architect. The cost of additional testing shall be borne by Contractor when defective concrete is identified.

D. Do not patch, fill, touch-up, repair, or replace exposed concrete except upon express direction of Architect for each individual area.

END OF SECTION 033000

SECTION 040100
MAINTENANCE OF MASONRY

PART 1 GENERAL

1.01 SECTION INCLUDES

A. Steam, Detergent, Chemical, and Water cleaning of exterior surfaces.

B. Replacement of masonry units.

C. Blast cleaning of exterior surfaces.

D. Repointing mortar joints.

E. Repair of damaged masonry.

F. Retrofitting masonry veneer construction with brick ties and weeps.

1.02 RELATED REQUIREMENTS

A. Section 040511 - Masonry Mortaring and Grouting.

B. Section 042000 - Unit Masonry: Brick masonry units.

C. Section 042000 - Unit Masonry: Mortar and grout.

D. Section 044200 - Exterior Stone Cladding.

1.03 REFERENCE STANDARDS

A. ACI SPEC-548.14 - Repairing Concrete with Epoxy Mortar—Specification.

B. TMS 402/602 - Building Code Requirements and Specification for Masonry Structures.

1.04 SUBMITTALS

A. See Section 013000 - Administrative Requirements, for submittal procedures.

B. Shop Drawings: Indicate special supports for the work. Detail shoring.

C. Samples: Submit 2 samples of decorative block, face brick, stone, and prefaced block units to illustrate matching color, texture and extremes of color range.

D. Manufacturer's Instructions: For cleaning materials, indicate special procedures, conditions requiring special attention.

1.05 QUALITY ASSURANCE - MASONRY WORK

A. Comply with provisions of TMS 402/602, except where exceeded by requirements of Contract Documents.
   1. Maintain one copy of each document on project site.

B. Restorer: Company specializing in masonry restoration with minimum three years of documented experience.

1.06 MOCK-UPS

A. Restore and repoint an existing masonry wall area sized 8 feet long by 6 feet high; include in mock-up area instances of mortar, accessories, wall openings, and flashings.

B. Clean a 10 ft by 10 ft panel of wall to determine extent of cleaning.
   1. Repeat, using different cleaning methods for up to three different panels.

C. Locate where directed.

D. Acceptable panel and procedures employed will become the standard for work of this section.

E. Acceptable mock-up may remain as part of the Work.

1.07 DELIVERY, STORAGE, AND HANDLING

A. Deliver masonry neatly stacked and tied on pallets. Store clear of ground with adequate waterproof covering.

B. Store blast medium, acid solution, and restoration cleaner materials in manufacturer's packaging.

C. Deliver polymer resin materials in original factory-sealed containers with manufacturer's labels intact and legible with verification of product nomenclature, manufacturer's name, product identification and batch number, date of manufacture, and shelf life or expiration date. Do not use polymer resin materials that have exceeded shelf life.

D. Store materials in covered, well-ventilated area protected from exposure to detrimental conditions, including airborne contaminants, dirt, dust, sunlight, temperatures lower than 40 degrees F or greater than 100 degrees F, rainfall, sparks, or flame, and in accordance with the manufacturer's requirements. Store polymer resins and hardeners in separate area from construction materials that can absorb odors.

1.08 FIELD CONDITIONS - MASONRY WORK

A. Cold and Hot Weather Requirements: Comply with requirements of TMS 402/602 or applicable building code, whichever is more stringent.

B. Do not blast clean or use process creating dust, dirt, when wind is over 10 mph.

1.09 FIELD CONDITIONS - CFRP WORK

A. Maintain materials and surrounding air temperature to minimum 55 degrees F prior to, during, and 48 hours after completion of CFRP work.

B. Maintain materials and surrounding air temperature to maximum 100 degrees F prior to, during, and 48 hours after completion of CFRP work.

C. Do not apply primers, saturating resins, and adhesives to cold or frozen surfaces.

D. Do not use supplemental sources of heat to raise air or masonry surface temperature unless approved by the CFRP system manufacturer.

E. Do not apply resins and adhesives to damp or wet surfaces unless they have been formulated for such applications.

F. Provide temporary protection from direct contact by rain, dust and dirt, excessive sunlight, and high humidity during installation and until resins have cured.

1.10 WARRANTY

A. See Section 017800 - Closeout Submittals for additional warranty requirements.

B. Warranty: Provide 5-year warranty for CFRP system design, installation, bond to the substrate, and interlaminar bond, as well as mechanical property retention and fabric-resin compatibility, commencing on Date of Substantial Completion. Complete forms in Owner's name and register with warrantor.

PART 2 PRODUCTS

2.01 MANUFACTURERS

A. Restoration and Cleaning Chemicals:
   1. Diedrich Technologies, Inc: www.diedrichtechnologies.com.
   2. HMK Stone Care System: www.hmkstonecare.com.
   3. PROSOCO: www.prosoco.com.

2.02 CLEANING MATERIALS

A. Cleaning Agent: Detergent, Solvent cleaner, and Acid solution type.

B. Cleaning Agent: 0.5 lb of sodium hydrosulphite mixture to one gallon of water.

C. Acid Solution: Clean, stain free, commercial hydrochloric (muriatic) acid, mixed one part to 15 parts of potable water.

2.03 RETROFIT ACCESSORIES

A. Manufacturers:

1. Masonry Technology, Inc; Retrofit Weep: www.mtidry.com/#sle.
2. Substitutions: See Section 016000 - Product Requirements.

B. Description:
1. Retrofit Wall Ties: Type 304 stainless steel, 3/8 inch high by 7 inches long, designed for retrofit installation in rainscreen applications, anchored to stud framing with fasteners and in mortar joint with anchoring epoxy from interior.
2. Retrofit Weeps: Polyethylene, 3/8 inch diameter by depth of brick, anchored in drilled hole in mortar joint with two-part epoxy bonding agent.

2.04 MORTAR MATERIALS

A. Comply with requirements of Section 040511.

2.05 MASONRY MATERIALS

A. Brick: Section 042000.

B. Stone Veneer: Section 044200.

C. Clay Tile: Section 042000.

D. Block: Section 042000.

PART 3 EXECUTION

3.01 EXAMINATION

A. Verify that surfaces to be cleaned are ready for work of this section.

B. Verify that masonry surfaces to receive CFRP are as dry as recommended by CFRP system manufacturer. Evaluate moisture content in accordance with ACI SPEC-548.14.

3.02 PREPARATION

A. Protect surrounding elements from damage due to restoration procedures.

B. Carefully remove and store removable items located in areas to be restored, including fixtures, fittings, finish hardware, and accessories; reinstall upon completion.

C. Separate areas to be protected from restoration areas using means adequate to prevent damage.

D. Cover existing landscaping with tarpaulins or similar covers.

E. Mask immediately adjacent surfaces with material that will withstand cleaning and restoration procedures.

F. Close off adjacent occupied areas with dust proof and weatherproof partitions.

G. Protect roof membrane and flashings from damage with 1/2 inch plywood laid on roof surfaces over full extent of work area and traffic route.

H. When using cleaning methods that involve water or other liquids, install drainage devices to prevent runoff over adjacent surfaces unless those surfaces are impervious to damage from runoff.

I. Do not allow cleaning runoff to drain into sanitary or storm sewers.

3.03 PREPARATION - RETROFIT ACCESSORIES

A. Demolition:
1. See Section 024100 - Demolition for additional requirements.

B. Removal:

C. Replacement:

3.04 INSTALLATION - RETROFIT ACCESSORIES

3.05 REBUILDING

A. Cut out damaged and deteriorated masonry with care in a manner to prevent damage to any adjacent remaining materials.

B. Support structure as necessary in advance of cutting out units.

C. Cut away loose or unsound adjoining masonry, mortar, and stone as directed.

D. Build in new matching units following procedures for new work specified in other section(s).

E. Mortar Mix: Colored and proportioned to match existing work.

F. Ensure that anchors, ties, reinforcing, stone cramps and dowels, and flashings are correctly located and built in.

G. Install built in masonry and stone work to match and align with existing, with joints and coursing true and level, faces plumb and in line. Build in all openings, accessories and fittings.

3.06 REPOINTING

A. Perform repointing prior to cleaning masonry surfaces.

B. Cut out loose or disintegrated mortar in joints to minimum 1/2 inch depth or until sound mortar is reached.

C. Use power tools only after test cuts determine no damage to masonry units will result.

D. Do not damage masonry units.

E. When cutting is complete, remove dust and loose material by brushing.

F. Premoisten joint and apply mortar. Pack tightly in maximum 1/4 inch layers. Form a smooth, compact same type of joint to match existing.

G. Moist cure for 72 hours.

3.07 CLEANING NEW MASONRY

A. Verify mortar is fully set and cured.

B. Clean surfaces and remove large particles with wood scrapers, brass or nylon wire brushes.

C. Protect area below cleaning operation and keep masonry soaked with water and flushed free of acid and dissolved mortar continuously for duration of cleaning.

D. Before solution dries, rinse and remove acid solution and dissolved mortar, using clean, pressurized water.

3.08 RESTORATION CLEANING

A. Clean surfaces and remove large particles with wood scrapers or non-ferrous wire brush.

B. Spray or Brush coat masonry with restoration cleaner, mixed into solution in accordance with manufacturer's instructions.

C. Provide a second application if required to match mock-up area.

D. Allow sufficient time for solution to remain on masonry and agitate with soft fiber brush or sponge.

E. Rinse from the bottom up with potable water applied at 400 psi and at a rate of 4 gal/min.

3.09 AGING

A. Rub in new masonry work to match, as close as possible, adjacent original work.
   1. Use carbon black in small amounts, rubbing in well with medium bristle brush.

B. After each application, dust off surplus and wash down with low pressure hose. Allow surface to dry before proceeding with succeeding applications.

C. Continue process until acceptance.

3.10 CLEANING

A. Immediately remove stains, efflorescence, or other excess resulting from the work of this section.

B. Remove excess mortar, smears, and droppings as work proceeds and upon completion.

C. Clean surrounding surfaces and grounds.

END OF SECTION 040100

SECTION 042000
UNIT MASONRY

PART 1 GENERAL

1.01 SECTION INCLUDES

A. Concrete block.

B. Concrete building brick.

C. Mortar and Grout.

D. Lintels.

1.02 RELATED REQUIREMENTS

A. Section 040511 - Masonry Mortaring and Grouting.

B. Section 055000 - Metal Fabrications: Loose steel lintels.

C. Section 079200 - Joint Sealants: Sealing control and expansion joints.

1.03 REFERENCE STANDARDS

A. ASTM A153/A153M - Standard Specification for Zinc Coating (Hot-Dip) on Iron and Steel Hardware.

B. ASTM A951/A951M - Standard Specification for Steel Wire for Masonry Joint Reinforcement.

C. ASTM A1064/A1064M - Standard Specification for Carbon-Steel Wire and Welded Wire Reinforcement, Plain and Deformed, for Concrete.

D. TMS 402/602 - Building Code Requirements and Specification for Masonry Structures.

1.04 SUBMITTALS

A. See Section 013000 - Administrative Requirements for submittal procedures.

B. Product Data: Provide data for masonry units, fabricated wire reinforcement, and masonry accessories.

C. Manufacturer's Certificate: Certify that masonry units meet or exceed specified requirements.

1.05 QUALITY ASSURANCE

A. Comply with provisions of TMS 402/602, except where exceeded by requirements of Contract Documents.

B. Manufacturer Qualifications: Company specializing in manufacturing the type of products specified in this section with minimum three years of documented experience.

C. Installer Qualifications: Company specializing in performing work of the type specified and with at least three years of documented experience.

1.06 DELIVERY, STORAGE, AND HANDLING

A. Deliver, handle, and store masonry units by means that will prevent mechanical damage and contamination by other materials.

PART 2 PRODUCTS

2.01 CONCRETE MASONRY UNITS

A. Concrete Block: Comply with referenced standards and as follows:
   1. Size: Standard units with nominal face dimensions of 16 by 8 inches and nominal depths as indicated on drawings for specific locations.
   2. Special Shapes: Provide nonstandard blocks configured for corners.
      a. Provide bullnose units for outside corners.

2.02 MORTAR AND GROUT MATERIALS

A. Mortar and Grout: As specified in Section 040511.

2.03 REINFORCEMENT AND ANCHORAGE

A. Reinforcing steel shall have a galvanized finish with no less than 10% surface rust.

B. Manufacturers:
   1. Blok-Lok Limited: www.blok-lok.com.
   2. Dur-O- Wall: www.dur-O -wal.com
   3. Hohmann & Barnard, Inc; X-Seal Anchor: www.h-b.com/#sle.
   4. WIRE-BOND: www.wirebond.com/#sle.
   5. Substitutions: See Section 016000 - Product Requirements.

C. Joint Reinforcement: Use ladder type joint reinforcement where vertical reinforcement is involved and truss type elsewhere, unless otherwise indicated.

D. Adjustable Multiple Wythe Joint Reinforcement: ASTM A951/A951M.
   1. Type: Truss, with adjustable ties or tabs spaced at 16 in on center.
   2. Material: ASTM A1064/A1064M steel wire, hot dip galvanized after fabrication to ASTM A153/A153M Class B.
   3. Size: 0.1875 inch side rods with 0.1483 inch cross rods and adjustable components of 0.1875 inchwire, width of components as required to provide not less than 5/8 inch of mortar coverage from each masonry face.
   4. Vertical adjustment: Not more than 1 1/4 inches.
   5. Seismic Feature: Provide lip, hook, or clip on extended leg of wall ties to engage or enclose not less than one continuous horizontal joint reinforcement wire of 0.1483 inch diameter.

2.04 LINTELS

A. Loose Steel Lintels: As specified in Section 055000.

PART 3 EXECUTION

3.01 EXAMINATION

A. Verify that field conditions are acceptable and are ready to receive masonry.

B. Verify that related items provided under other sections are properly sized and located.

C. Verify that built-in items are in proper location, and ready for roughing into masonry work.

3.02 PREPARATION

A. Direct and coordinate placement of metal anchors supplied for installation under other sections.

B. Provide temporary bracing during installation of masonry work. Maintain in place until building structure provides permanent bracing.

3.03 COURSING

A. Establish lines, levels, and coursing indicated. Protect from displacement.

B. Maintain masonry courses to uniform dimension. Form vertical and horizontal joints of uniform thickness.

C. Concrete Masonry Units:
   1. Bond: Running.
   2. Coursing: One unit and one mortar joint to equal 8 inches.
   3. Mortar Joints: Concave.

3.04 PLACING AND BONDING

A. Buttering corners of joints or excessive furrowing of mortar joints is not permitted.

B. Remove excess mortar and mortar smears as work progresses.

C. Interlock intersections and external corners, except for units laid in stack bond.

D. Do not shift or tap masonry units after mortar has achieved initial set. Where adjustment must be made, remove mortar and replace.

E. Perform job site cutting of masonry units with proper tools to provide straight, clean, unchipped edges. Prevent broken masonry unit corners or edges.

F. Cut mortar joints flush where wall tile is scheduled or resilient base is scheduled.

G. Isolate masonry partitions from vertical structural framing members with a control joint as indicated.

H. Isolate top joint of masonry partitions from horizontal structural framing members and slabs or decks with compressible joint filler.

3.05 LINTELS

A. Install precast concrete lintels over openings.

B. Install reinforced unit masonry lintels over openings where steel or precast concrete lintels are not scheduled.
   1. Openings to 42 inches: Place two, No. 3 reinforcing bars 1 inch from bottom web.
   2. Openings from 42 inches to 78 inches: Place two, No. 5 reinforcing bars 1 inch from bottom web.
   3. Openings over 78 inches: Reinforce openings as detailed.
   4. Do not splice reinforcing bars.
   5. Support and secure reinforcing bars from displacement. Maintain position within 1/2 inch of dimensioned position.
   6. Place and consolidate grout fill without displacing reinforcing.
   7. Allow masonry lintels to attain specified strength before removing temporary supports.

C. Maintain minimum 4 inch bearing on each side of opening.

3.06 GROUTED COMPONENTS

A. Reinforce bond beams with 2, No. 3 bars, 1 inch from bottom web.

B. Lap splices minimum 24 bar diameters.

C. At bearing locations, fill masonry cores with grout for a minimum 12 inches either side of opening.

3.07 CONTROL AND EXPANSION JOINTS

A. Do not continue horizontal joint reinforcement through control or expansion joints.

B. Size control joints as indicated on drawings; if not indicated, 3/4 inch wide and deep.

3.08 BUILT-IN WORK

A. As work progresses, install built-in metal door frames, glazed frames, fabricated metal frames, window frames, wood nailing strips, anchor bolts, and plates and other items to be built into the work and furnished under other sections.

B. Install built-in items plumb, level, and true to line.

C. Do not build into masonry construction organic materials that are subject to deterioration.

3.09 TOLERANCES

A. Maximum Variation from Alignment of Columns: 1/4 inch.

B. Maximum Variation From Unit to Adjacent Unit: 1/16 inch.

C. Maximum Variation from Plane of Wall: 1/4 inch in 10 ft and 1/2 inch in 20 ft or more.

D. Maximum Variation from Plumb: 1/4 inch per story non-cumulative; 1/2 inch in two stories or more.

E. Maximum Variation from Level Coursing: 1/8 inch in 3 ft and 1/4 inch in 10 ft; 1/2 inch in 30 ft.

F. Maximum Variation of Mortar Joint Thickness: Head joint, minus 1/4 inch, plus 3/8 inch.

G. Maximum Variation from Cross Sectional Thickness of Walls: 1/4 inch.

3.10 CUTTING AND FITTING

A. Cut and fit for chases. Coordinate with other sections of work to provide correct size, shape, and location.

B. Obtain approval prior to cutting or fitting masonry work not indicated or where appearance or strength of masonry work may be impaired.

3.11 FIELD QUALITY CONTROL

A. An independent testing agency will perform field quality control tests, as specified in Section 014000 - Quality Requirements.

3.12 CLEANING

A. Remove excess mortar and mortar droppings.

B. Replace defective mortar. Match adjacent work.

C. Clean soiled surfaces with cleaning solution.

D. Use non-metallic tools in cleaning operations.

3.13 PROTECTION

A. Without damaging completed work, provide protective boards at exposed external corners that are subject to damage by construction activities.

END OF SECTION 042000

SECTION 054000
COLD-FORMED METAL FRAMING

PART 1 GENERAL

1.01 SECTION INCLUDES

A. Formed steel stud interior wall framing.

1.02 RELATED REQUIREMENTS

A. Section 061000 - Rough Carpentry: Wall sheathing.

1.03 REFERENCE STANDARDS

A. AISI S100 - North American Specification for the Design of Cold-Formed Steel Structural Members.

B. ASCE 7 - Minimum Design Loads and Associated Criteria for Buildings and Other Structures.

C. ASTM A780/A780M - Standard Practice for Repair of Damaged and Uncoated Areas of Hot-Dip Galvanized Coatings.

D. ASTM A1003/A1003M - Standard Specification for Steel Sheet, Carbon, Metallic- and Nonmetallic-Coated for Cold-Formed Framing Members.

E. ASTM C1007 - Standard Specification for Installation of Load Bearing (Transverse and Axial) Steel Studs and Related Accessories.

F. ICC (IBC) - International Building Code.

G. SSPC-Paint 15 - Steel Joist Shop Primer/Metal Building Primer.

H. SSPC-Paint 20 - Zinc-Rich Coating (Type I - Inorganic, and Type II - Organic).

1.04 ADMINISTRATIVE REQUIREMENTS

A. Coordinate with work of other sections that is to be installed in or adjacent to metal framing systems, including but not limited to structural anchors, cladding anchors, utilities, insulation, and firestopping.

1.05 SUBMITTALS

A. See Section 013000 - Administrative Requirements for submittal procedures.

B. Product Data: Provide data on cold-formed steel structural members; include material descriptions and base steel thickness.

C. Product Data: For lateral-force resisting systems, provide product data sheets on hold-down, showing compliance with requirements.

D. Shop Drawings: Indicate component details, framed openings, bearing, anchorage, loading, welds, and type and location of fasteners, and accessories or items required of related work.
   1. Indicate stud and ceiling joist layout.
   2. Describe method for securing studs to tracks and for bolted framing connections.

E. Designer's Qualification Statement.

1.06 QUALITY ASSURANCE

A. Designer Qualifications: Design framing system under direct supervision of a professional structural engineer experienced in designing this work and licensed in the State in which the Project is located.

B. Manufacturer Qualifications: Company specializing in manufacturing the types of products specified in this section, and with minimum three years of documented experience.

PART 2 PRODUCTS

2.01 MANUFACTURERS

A. Structural Framing:

1. CEMCO: www.cemcosteel.com.
2. Dietrich Metal Framing: www.dietrichindustries.com
3. The Steel Network, Inc: www.SteelNetwork.com.
4. Substitutions: See Section 016000 - Product Requirements.

B. Connectors:
1. Same manufacturer as metal framing.
2. Substitutions: See Section 016000 - Product Requirements.

2.02 PERFORMANCE REQUIREMENTS

A. Design Requirements: Design cold-formed framing systems, components and connectors to withstand specified design loads in compliance with ICC (IBC), ASCE 7, AISI S100, and AISI S240.

2.03 MATERIALS

A. Steel Sheet: ASTM A1003/A1003M, subject to the ductility limitations indicated in AISI S240.

2.04 STRUCTURAL FRAMING COMPONENTS

A. Wall Studs and Track Sections: AISI S240; c-shaped studs and u-shaped track sections in stud-matching nominal width and compatible height.
1. Thickness and Depth: Depth as indicated on the drawings; thickness and structural grade as required to meet design criteria.

2.05 SHEATHING

A. Wall Sheathing: See Section 061000 - Rough Carpentry.

2.06 ACCESSORIES

A. Bracing, Furring, Bridging: Formed sheet steel, thickness determined for conditions encountered; finish to match framing components.

B. Plates, Gussets, Clips: Formed Sheet Steel, thickness determined for conditions encountered; finish to match framing components.

C. Galvanizing Repair: Touch up bare steel with zinc-rich paint in compliance with ASTM A780/A780M.

D. Shop and Touch-Up Primer: SSPC-Paint 15, complying with VOC limitations of authorities having jurisdiction.

E. Touch-Up Primer for Galvanized Surfaces: SSPC-Paint 20 Type I - Inorganic, complying with VOC limitations of authorities having jurisdiction.

F. Water-Resistive Barrier: [As specified in Section 072500].

PART 3 EXECUTION

3.01 EXAMINATION

A. Verify that substrate surfaces are ready to receive work.

B. Verify field measurements and adjust installation as required.

3.02 INSTALLATION - GENERAL

A. Install structural members and connections in compliance with ASTM C1007.

3.03 INSTALLATION OF STUDS

A. Construct corners using minimum of three studs. Install double studs at wall openings, door and window jambs.

B. Coordinate placement of insulation in multiple stud spaces made inaccessible after erection.

C. Install intermediate studs above and below openings to align with wall stud spacing.

D. Provide deflection allowance in stud track, directly below horizontal building framing at non-loadbearing framing.

E. Attach cross studs to studs for attachment of fixtures anchored to walls.

F. Install framing between studs for attachment of mechanical and electrical items, and to prevent stud rotation.

G. Touch-up field welds and damaged corrosion protected surfaces with primer.

3.04 INSTALLATION OF WALL SHEATHING

A. Wall Sheathing [as specified in Section 061000]: Secure with long dimension perpendicular to wall studs, with ends over firm bearing and staggered, using self-tapping screws.

3.05 TOLERANCES

A. Maximum Variation from True Position: 1/4 inch.

B. Maximum Variation of any Member from Plane: 1/4 inch.

END OF SECTION 054000

SECTION 055000
METAL FABRICATIONS

PART 1 GENERAL

1.01 SECTION INCLUDES

A. Shop fabricated miscellaneous steel and aluminum items.

1.02 RELATED REQUIREMENTS

1.03 REFERENCE STANDARDS

A. AISC (MAN) <http://www.aisc.org/store/c-2-manuals.aspx> - Steel Construction Manual; 2011.

B. AISC 303 <https://www.aisc.org/publications/> - Code of Standard Practice for Steel Buildings and Bridges; 2016.

C. AAMA 611 - Specification for Anodized Architectural Aluminum.

D. ASTM A36/A36M - Standard Specification for Carbon Structural Steel.

E. ASTM A53/A53M - Standard Specification for Pipe, Steel, Black and Hot-Dipped, Zinc-Coated, Welded and Seamless.

F. ASTM A283/A283M - Standard Specification for Low and Intermediate Tensile Strength Carbon Steel Plates.

G. AWS A2.4 - Standard Symbols for Welding, Brazing, and Nondestructive Examination.

H. AWS D1.1/D1.1M - Structural Welding Code - Steel.

I. IAS AC172 - Accreditation Criteria for Fabricator Inspection Programs for Structural Steel AC172.

J. SSPC-Paint 15 - Steel Joist Shop Primer/Metal Building Primer.

1.04 SUBMITTALS

A. See Section 013000 - Administrative Requirements, for submittal procedures.

B. Shop Drawings: Indicate profiles, sizes, connection attachments, reinforcing, anchorage, size and type of fasteners, and accessories. Include erection drawings, elevations, and details where applicable.

1. Indicate welded connections using standard AWS A2.4 welding symbols. Indicate net weld lengths.

C. Fabricator's Qualification Statement: Provide documentation showing steel fabricator is accredited under IAS AC172 or certified as AISC Approved Structural Steel Fabricator.

1.05 QUALITY ASSURANCE

A. Design to be under direct supervision of a Professional Structural Engineer experienced in design of this work and licensed in the State in which the Project is located.

B. Fabricator Qualifications: A qualified steel fabricator that is accredited by IAS AC172 or certified as AISC Approved Structural Steel Fabricator.

PART 2 PRODUCTS

2.01 MATERIALS - STEEL

A. Steel Sections: ASTM A36/A36M.

B. Plates: ASTM A283/A283M.

C. Pipe: ASTM A53/A53M, Grade B Schedule 40, black finish.

D. Shop and Touch-Up Primer: SSPC-Paint 15, complying with VOC limitations of authorities having jurisdiction.

2.02 MATERIALS - ALUMINUM

2.03 FABRICATION

A. Fit and shop assemble items in largest practical sections, for delivery to site.

B. Fabricate items with joints tightly fitted and secured.

C. Continuously seal joined members by continuous welds.

D. Grind exposed joints flush and smooth with adjacent finish surface. Make exposed joints butt tight, flush, and hairline. Ease exposed edges to small uniform radius.

E. Exposed Mechanical Fastenings: Flush countersunk screws or bolts; unobtrusively located; consistent with design of component, except where specifically noted otherwise.

F. Furnish components required for anchorage of fabrications. Fabricate anchors and related components of same material and finish as fabrication, except where specifically noted otherwise.

2.04 FABRICATED ITEMS

A. Lintels: As detailed; prime paint finish.

2.05 FINISHES - ALUMINUM

A. Exterior Aluminum Surfaces: Class I natural anodized.

B. Interior Aluminum Surfaces: Class II color anodized.

C. Class I Natural Anodized Finish: AAMA 611 AA-M12C22A41 Clear anodic coating not less than 0.7 mils thick.

D. Class II Color Anodized Finish: AAMA 611 AA-M12C22A34 Electrolytically deposited colored anodic coating not less than 0.4 mils thick; light bronze.

2.06 FABRICATION TOLERANCES

A. Squareness: 1/8 inch maximum difference in diagonal measurements.

B. Maximum Offset Between Faces: 1/16 inch.

C. Maximum Misalignment of Adjacent Members: 1/16 inch.

D. Maximum Bow: 1/8 inch in 48 inches.

E. Maximum Deviation From Plane: 1/16 inch in 48 inches.

PART 3 EXECUTION

3.01 EXAMINATION

A. Verify that field conditions are acceptable and are ready to receive work.

3.02 PREPARATION

A. Clean and strip primed steel items to bare metal where site welding is required.

B. Furnish setting templates to the appropriate entities for steel items required to be cast into concrete or embedded in masonry.

3.03 INSTALLATION

A. Install items plumb and level, accurately fitted, free from distortion or defects.

B. Provide for erection loads, and for sufficient temporary bracing to maintain true alignment until completion of erection and installation of permanent attachments.

C. Perform field welding in accordance with AWS D1.1/D1.1M.

D. Obtain approval prior to site cutting or making adjustments not scheduled.

3.04 TOLERANCES

A. Maximum Variation From Plumb: 1/4 inch per story, non-cumulative.

B. Maximum Offset From True Alignment: 1/4 inch.

C. Maximum Out-of-Position: 1/4 inch.

END OF SECTION 055000

SECTION 055213
PIPE AND TUBE RAILINGS

PART 1 GENERAL

1.01 SECTION INCLUDES

A. Stair railings and guardrails.

B. Free-standing railings at steps and ramps.

1.02 RELATED REQUIREMENTS

A. Section 033000 - Cast-in-Place Concrete: Placement of anchors in concrete.

1.03 REFERENCE STANDARDS

A. AISC 207 - Standard for Certification Programs.

B. ASTM A53/A53M - Standard Specification for Pipe, Steel, Black and Hot-Dipped, Zinc-Coated, Welded and Seamless.

C. ASTM A123/A123M - Standard Specification for Zinc (Hot-Dip Galvanized) Coatings on Iron and Steel Products.

D. ASTM A500/A500M - Standard Specification for Cold-Formed Welded and Seamless Carbon Steel Structural Tubing in Rounds and Shapes.

E. ASTM E985 - Standard Specification for Permanent Metal Railing Systems and Rails for Buildings.

F. IAS AC172 - Accreditation Criteria for Fabricator Inspection Programs for Structural Steel AC172.

G. SSPC-Paint 20 - Zinc-Rich Coating (Type I - Inorganic, and Type II - Organic).

1.04 SUBMITTALS

A. See Section 013000 - Administrative Requirements, for submittal procedures.

B. Shop Drawings: Indicate profiles, sizes, connection attachments, anchorage, size and type of fasteners, and accessories.

1.05 QUALITY ASSURANCE

A. Structural Designer Qualifications: Professional Structural Engineer experienced in design of this work and licensed in the State in which the Project is located, or personnel under direct supervision of such an engineer.

B. Fabricator Qualifications:
   1. A qualified steel fabricator that is certified by the American Institute for Steel Construction (AISC) under AISC 207.
   2. A qualified steel fabricator that is accredited by the International Accreditation Service (IAS) Fabricator Inspection Program for Structural Steel in accordance with IAS AC172.
   3. A company specializing in manufacturing products specified in this section, with not less than ten years of documented experience.

PART 2 PRODUCTS

2.01 RAILINGS - GENERAL REQUIREMENTS

A. Design, fabricate, and test railing assemblies in accordance with the most stringent requirements of applicable local code.

B. Design Criteria: Design and fabricate railings and anchorage to resist the following loads without failure, damage, or permanent set; loads do not need to applied simultaneously.
   1. Lateral Force: 85 lb minimum, at any point, when tested in accordance with ASTM E935.
   2. Distributed Load; 50lb/ft minimum, applied in any direction at the top of the handrail, when tested in accordance with ASTM E935.
   3. Concentrated Loads on Intermediate Rails: 50 psf, minimum.

4. Concentrated Load: 200 lbs minimum, applied in any direction at any point along the rail system, when tested in accordance with ASTM E935.
5. Handrails: Comply with applicable accessibility requirements of ADA Standards.

C. Allow for expansion and contraction of members and building movement without damage to connections or members.

D. Dimensions: See drawings for configurations and heights.
1. Top Rails and Wall Rails: 1-1/2 inches diameter, round.
2. Intermediate Rails: 1-1/2 inches diameter, round.
3. Posts: 1-1/2 inches diameter, round.
4. Balusters: 1/2 inch round solid bar.

E. Provide anchors and other components as required to attach to structure, made of same materials as railing components unless otherwise indicated; where exposed fasteners are unavoidable provide flush countersunk fasteners.

F. Provide welding fittings to join lengths, seal open ends, and conceal exposed mounting bolts and nuts, including but not limited to elbows, T-shapes, splice connectors, flanges, escutcheons, and wall brackets.

2.02 STEEL RAILING SYSTEM

A. Steel Tube: ASTM A500/A500M Grade B cold-formed structural tubing.

B. Steel Pipe: ASTM A 53/A 53M Grade B Schedule 40, black finish.

C. Welding Fittings: Factory- or shop-welded from matching pipe or tube; seams continuously welded; joints and seams ground smooth.

D. Straight Splice Connectors: Steel concealed spigots.

E. Galvanizing: In accordance with requirements of ASTM A123/A123M.
1. Touch-Up Primer for Galvanized Surfaces: SSPC-Paint 20 Type I - Inorganic.

2.03 FABRICATION

A. Accurately form components to suit specific project conditions and for proper connection to building structure.

B. Fit and shop assemble components in largest practical sizes for delivery to site.

C. Fabricate components with joints tightly fitted and secured. Provide spigots and sleeves to accommodate site assembly and installation.

D. Welded Joints:
1. Exterior Components: Continuously seal joined pieces by intermittent welds and plastic filler. Drill condensate drainage holes at bottom of members at locations that will not encourage water intrusion.
2. Interior Components: Continuously seal joined pieces by intermittent welds and plastic filler.
3. Grind exposed joints flush and smooth with adjacent finish surface. Make exposed joints butt tight, flush, and hairline. Ease exposed edges to small uniform radius.

E. Provide returns at ends of handrails. Close ends of returns.

F. Brackets, Flanges, Fittings, and Anchors: Provide wall brackets, flanges, miscellaneous fittings, and anchors to interconnect railing members to other work unless otherwise indicated.
1. At brackets and fittings fastened to plaster or gypsum board: provide crush-resistant fillers or other means to transfer loads through wall finishes to structural supports and prevent bracket or fitting rotation and crushing of substrate.

G. Provide inserts and other anchorage devices for connecting railings to concrete or masonry work. Fabricate anchorage devices capable of withstanding loads imposed by railings. Coordinate anchorage devices with supporting structure.

PART 3 EXECUTION

3.01 EXAMINATION

A. Verify that field conditions are acceptable and are ready to receive work.

3.02 PREPARATION

A. Clean and strip primed steel items to bare metal where site welding is required.

3.03 INSTALLATION

A. Install in accordance with manufacturer's instructions.

B. Install components plumb and level, accurately fitted, free from distortion or defects, with tight joints.

C. Anchor railings securely to structure.

3.04 TOLERANCES

A. Maximum Variation From Plumb: 1/4 inch per floor level, non-cumulative.

B. Maximum Offset From True Alignment: 1/4 inch.

C. Maximum Out-of-Position: 1/4 inch.

3.05 PROTECTION

A. Protect finishes of railings from damage during construction period with temporary protective coverings approved by railing manufacturer.

END OF SECTION 055213

SECTION 060573
WOOD TREATMENT

PART 1 GENERAL

1.01 SECTION INCLUDES

A. Field-applied termiticide for wood materials.

1.02 SUBMITTALS

A. See Section 013000 - Administrative Requirements for submittal procedures.

B. Product Data: Provide technical data for insulated sheathing, wood preservative materials, and application instructions.

C. Warranty: Submit manufacturer warranty and ensure that forms have been completed in Owner's name and registered with manufacturer.

1.03 DELIVERY, STORAGE, AND HANDLING

A. General: Cover wood products to protect against moisture. Support stacked products to prevent deformation and to allow air circulation.

B. Fire Retardant Treated Wood: Prevent exposure to precipitation during shipping, storage, and installation.

1.04 WARRANTY

A. See Section 017800 - Closeout Submittals for additional warranty requirements.

B. Site Applied Termiticide and Mildewcide: Correct defective work within a twenty-five year period after Date of Substantial Completion.

C. Provide five year manufacturer warranty for labor.

PART 2 PRODUCTS

2.01 FIELD-APPLIED WOOD TREATMENT

A. Field-Applied Termiticide for Wood: Borate mineral salt based, spray applied, penetrating termiticide.

PART 3 EXECUTION

3.01 PREPARATION

A. Remove dust, dirt and other contaminants from treatment surfaces. Remove tarpaulins, dropcloths, strippable protective films, etc., from areas to be treated. Move equipment and stored materials that block or prevent product application.

3.02 INSTALLATION - GENERAL

A. Provide temporary ventilation during and immediately after installation sufficient to remove indoor air contaminants.

3.03 FIELD-APPLIED WOOD TREATMENT

A. Comply with manufacturer's written mixing and application instructions.

B. Termiticide: Apply to foundations, structure, and other items indicated and as follows:
   1. Structural wood and sill plates within 24 inches, minimum, of point of contact with foundation.
   2. Wood, wood-based, and cellulosic sheathing within 24 inches, minimum, of point of contact with foundation.
   3. Concrete foundations 2 inches, minimum, from sill plate.

END OF SECTION 060573

SECTION 061000
ROUGH CARPENTRY

PART 1 GENERAL

1.01 SECTION INCLUDES

A. Rough opening framing for doors, windows, and roof openings.

B. Roof-mounted curbs.

C. Roofing nailers.

D. Preservative treated wood materials.

E. Fire retardant treated wood materials.

F. Concealed wood blocking, nailers, and supports.

1.02 REFERENCE STANDARDS

A. ASTM A153/A153M - Standard Specification for Zinc Coating (Hot-Dip) on Iron and Steel Hardware.

B. AWPA U1 - Use Category System: User Specification for Treated Wood.

C. PS 20 - American Softwood Lumber Standard.

1.03 SUBMITTALS

A. See Section 013000 - Administrative Requirements for submittal procedures.

B. Product Data: Provide technical data on insulated sheathing, wood preservative materials, and application instructions.

C. Manufacturer's Certificate: Certify that wood products supplied for rough carpentry meet or exceed specified requirements.

1.04 DELIVERY, STORAGE, AND HANDLING

A. General: Cover wood products to protect against moisture. Support stacked products to prevent deformation and to allow air circulation.

1.05 WARRANTY

A. See Section 017800 - Closeout Submittals for additional warranty requirements.

PART 2 PRODUCTS

2.01 GENERAL REQUIREMENTS

A. Dimension Lumber: Comply with PS 20 and requirements of specified grading agencies.
   1. If no species is specified, provide species graded by the agency specified; if no grading agency is specified, provide lumber graded by grading agency meeting the specified requirements.
   2. Grading Agency: Grading agency whose rules are approved by the Board of Review, American Lumber Standard Committee at www.alsc.org, and who provides grading service for the species and grade specified; provide lumber stamped with grade mark unless otherwise indicated.
   3. Lumber of other species or grades is acceptable provided structural and appearance characteristics are equivalent to or better than products specified.

2.02 DIMENSION LUMBER FOR CONCEALED APPLICATIONS

A. Sizes: Nominal sizes as indicated on drawings, S4S.

B. Moisture Content: S-dry or MC19.

C. Miscellaneous Framing, Blocking, Nailers, Grounds, and Furring:
   1. Lumber: S4S, No. 2 or Standard Grade.
   2. Boards: Standard or No. 3.

2.03 ACCESSORIES

A. Fasteners and Anchors:
   1. Metal and Finish: Hot-dipped galvanized steel complying with ASTM A153/A153M for high humidity and preservative-treated wood locations, unfinished steel elsewhere.

2.04 FACTORY WOOD TREATMENT

A. Treated Lumber and Plywood: Comply with requirements of AWPA U1 - Use Category System for wood treatments determined by use categories, expected service conditions, and specific applications.
   1. Fire-Retardant Treated Wood: Mark each piece of wood with producer's stamp indicating compliance with specified requirements.
   2. Preservative-Treated Wood: Provide lumber and plywood marked or stamped by an ALSC-accredited testing agency, certifying level and type of treatment in accordance with AWPA standards.

B. Preservative Treatment:
   1. Preservative Pressure Treatment of Lumber Above Grade: AWPA U1, Use Category UC3B, Commodity Specification A using waterborne preservative.
      a. Kiln dry lumber after treatment to maximum moisture content of 19 percent.
      b. Treat lumber in contact with roofing, flashing, or waterproofing.

PART 3 EXECUTION

3.01 INSTALLATION - GENERAL

A. Select material sizes to minimize waste.

B. Reuse scrap to the greatest extent possible; clearly separate scrap for use on site as accessory components, including: shims, bracing, and blocking.

C. Where treated wood is used on interior, provide temporary ventilation during and immediately after installation sufficient to remove indoor air contaminants.

3.02 BLOCKING, NAILERS, AND SUPPORTS

A. Provide framing and blocking members as indicated or as required to support finishes, fixtures, specialty items, and trim.

B. In framed assemblies that have concealed spaces, provide solid wood fireblocking as required by applicable local code, to close concealed draft openings between floors and between top story and roof/attic space; other material acceptable to authorities having jurisdiction may be used in lieu of solid wood blocking.

C. In metal stud walls, provide continuous blocking around door and window openings for anchorage of frames, securely attached to stud framing.

D. In walls, provide blocking attached to studs as backing and support for wall-mounted items, unless item can be securely fastened to two or more studs or other method of support is explicitly indicated.

E. Where ceiling-mounting is indicated, provide blocking and supplementary supports above ceiling, unless other method of support is explicitly indicated.

F. Provide the following specific nonstructural framing and blocking:
   1. Cabinets and shelf supports.
   2. Wall brackets.
   3. Handrails.
   4. Grab bars.
   5. Towel and bath accessories.
   6. Wall-mounted door stops.
   7. Tackboards and marker boards.
   8. Wall paneling and trim.
   9. Joints of rigid wall coverings that occur between studs.

10. Fire Extinguishers.
11. Door hold open hardware.

3.03 ROOF-RELATED CARPENTRY

A. Coordinate installation of roofing carpentry with deck construction, framing of roof openings, and roofing assembly installation.

B. Provide wood curb at each roof opening except where specifically indicated otherwise; form corners by alternating lapping side members.

C. Provide separation and no direct contact of aluminum flashings and preservative pressure treated roof blocking to avoid potential corrosion using roofing membrane or roofing felts.

3.04 TOLERANCES

A. Framing Members: 1/4 inch from true position, maximum.

B. Variation from Plane, Other than Floors: 1/4 inch in 10 feet maximum, and 1/4 inch in 30 feet maximum.

3.05 CLEANING

A. Waste Disposal: See Section 017419 - Construction Waste Management and Disposal.
   1. Comply with applicable regulations.
   2. Do not burn scrap on project site.
   3. Do not burn scraps that have been pressure treated.
   4. Do not send materials treated with pentachlorophenol, CCA, or ACA to co-generation facilities or “waste-to-energy” facilities.

B. Do not leave wood, shavings, sawdust, etc. on the ground or buried in fill.

C. Prevent sawdust and wood shavings from entering the storm drainage system.

END OF SECTION 061000

SECTION 062000
FINISH CARPENTRY

PART 1 GENERAL

1.01 SECTION INCLUDES

A. Finish carpentry items.

1.02 RELATED REQUIREMENTS

1.03 REFERENCE STANDARDS

A. BHMA A156.9 - Cabinet Hardware.

B. NEMA LD 3 - High-Pressure Decorative Laminates.

1.04 ADMINISTRATIVE REQUIREMENTS

A. Coordinate the work with plumbing rough-in, electrical rough-in, and installation of associated and adjacent components.

B. Sequence installation to ensure utility connections are achieved in an orderly and expeditious manner.

1.05 SUBMITTALS

A. See Section 013000 - Administrative Requirements for submittal procedures.

B. Shop Drawings: Indicate materials, component profiles, fastening methods, jointing details, and accessories.
   1. Scale of Drawings: 1-1/2 inch to 1 foot, minimum.
   2. Include certification program label.

C. Samples: Submit two samples of finish plywood, 4" x 4" inch in size illustrating wood grain and specified finish.

D. Samples: Submit two samples of wood trim 4 inch long.

1.06 QUALITY ASSURANCE

A. Fabricator Qualifications: Company specializing in fabricating the products specified in this section with minimum five years of documented experience.
   1. Company with at least one project within the past 5 years with value of woodwork within 20 percent of cost of woodwork for this project.
   2. Accredited participant in the specified certification program prior to the commencement of fabrication and throughout the duration of the project.
   3. Single Source Responsibility: Provide and install this work from single fabricator.

1.07 DELIVERY, STORAGE, AND HANDLING

A. Protect from moisture damage.

PART 2 PRODUCTS

2.01 FINISH CARPENTRY ITEMS

A. Surface Burning Characteristics: Provide materials having fire and smoke properties as required by applicable code.

B. Interior Woodwork Items:

2.02 PLASTIC LAMINATE MATERIALS

A. Plastic Laminate: NEMA LD 3, HGS; color as selected by Architect; textured, low gloss finish.

B. Low Pressure Laminate: as indicated on the drawings; and gloss surface texture.

C. Laminate Backing Sheet: NEMA LD 3, BKL; undecorated plastic laminate.

D. Laminate Adhesive: Type recommended by laminate manufacturer to suit application; not containing formaldehyde or other volatile organic compounds.

2.03 FASTENINGS

A. Adhesive for Purposes Other Than Laminate Installation: Suitable for the purpose; not containing formaldehyde or other volatile organic compounds.

B. Fasteners: Of size and type to suit application; standard finish in concealed locations and matching finish in exposed locations.

C. Concealed Joint Fasteners: Threaded steel.

2.04 ACCESSORIES

A. Lumber for Shimming and Blocking: Softwood lumber of indicated species.

B. Plastic Edge Trim: Extruded convex shaped; smooth finish; self locking serrated tongue; of width to match component thickness; color as selected.

C. Wood Filler: Solvent base, tinted to match surface finish color.

2.05 HARDWARE

A. Hardware: Comply with BHMA A156.9.

2.06 FABRICATION

A. Shop assemble work for delivery to site, permitting passage through building openings.

B. Cap exposed plastic laminate finish edges with plastic trim.

C. When necessary to cut and fit on site, provide materials with ample allowance for cutting. Provide trim for scribing and site cutting.

D. Apply plastic laminate finish in full uninterrupted sheets consistent with manufactured sizes. Fit corners and joints hairline; secure with concealed fasteners. Slightly bevel arises. Locate counter butt joints minimum 2 feet from sink cut-outs.

E. Apply laminate backing sheet to reverse face of plastic laminate finished surfaces.

2.07 SHOP FINISHING

A. Sand work smooth and set exposed nails and screws.

B. Apply wood filler in exposed nail and screw indentations.

C. On items to receive transparent finishes, use wood filler that matches surrounding surfaces and is of type recommended for the applicable finish.

D. Prime paint surfaces in contact with cementitious materials.

E. Back prime woodwork items to be field finished, prior to installation.

PART 3 EXECUTION

3.01 EXAMINATION

A. Verify adequacy of backing and support framing.

B. Verify mechanical, electrical, and building items affecting work of this section are placed and ready to receive this work.

C. See Section 061000 for installation of recessed wood blocking.

3.02 INSTALLATION

A. Set and secure materials and components in place, plumb and level.

B. Carefully scribe work abutting other components, with maximum gaps of 1/32 inch. Do not use additional overlay trim to conceal larger gaps.

C. See Section 061000 for installation requirements for attachment accessories.

D. Install components with nails at 16 inch on center.

E. Install prefinished paneling with full bed contact adhesive applied to substrate.

F. Install hardware in accordance with manufacturer's written instructions.

3.03 PREPARATION FOR SITE FINISHING

A. Set exposed fasteners. Apply wood filler in exposed fastener indentations. Sand work smooth.

B. Before installation, prime paint surfaces of items or assemblies to be in contact with cementitious materials.

END OF SECTION 062000

SECTION 072100
THERMAL INSULATION

PART 1 GENERAL

1.01 SECTION INCLUDES

A. Batt insulation in exterior wall construction.

1.02 REFERENCE STANDARDS

A. ASTM C553 - Standard Specification for Mineral Fiber Blanket Thermal Insulation for Commercial and Industrial Applications.

B. ASTM C665 - Standard Specification for Mineral-Fiber Blanket Thermal Insulation for Light Frame Construction and Manufactured Housing.

C. ASTM E84 - Standard Test Method for Surface Burning Characteristics of Building Materials.

1.03 SUBMITTALS

A. See Section 013000 - Administrative Requirements for submittal procedures.

B. Product Data: Provide data on product characteristics, performance criteria, and product limitations.

C. Test Reports: For insulation products, provide independent laboratory reports and test results showing negative asbestos containing materials content using Polarized Light Microscopy (PLM) test method.

1.04 QUALITY ASSURANCE

1.05 FIELD CONDITIONS

A. Do not install insulation adhesives when temperature or weather conditions are detrimental to successful installation.

PART 2 PRODUCTS

2.01 APPLICATIONS

2.02 MINERAL FIBER BLANKET INSULATION MATERIALS

A. Mineral Wool Blanket Thermal Insulation: Flexible or semi-rigid preformed insulation, complying with ASTM C665.
   1. Smoke Developed Index: 450 or less, when tested in accordance with ASTM E84.
   2. Thermal Resistance: R-value of 4.2 per inch.
   3. Products:
      a. Johns Manville; Mineral Wool TempControl Batts: www.jm.com/#sle.
      b. ROCKWOOL (ROXUL, Inc); COMFORTBATT: www.rockwool.com/#sle.

2.03 ACCESSORIES

A. Tape: Bright aluminum self-adhering type, mesh reinforced, 2 inch wide.

B. Insulation Fasteners: Impaling clip of unfinished steel with washer retainer and clips, to be adhered to surface to receive insulation, length to suit insulation thickness and substrate, capable of securely and rigidly fastening insulation in place.

C. Nails or Staples: Steel wire; electroplated or galvanized; type and size to suit application.

D. Wire Mesh: Galvanized steel, hexagonal wire mesh.

PART 3 EXECUTION

3.01 EXAMINATION

A. Verify that substrate, adjacent materials, and insulation materials are dry and that substrates are ready to receive insulation.

B. Verify substrate surfaces are flat, free of honeycomb, fins, irregularities, or materials or substances that may impede adhesive bond.

3.02 BATT INSTALLATION

A. Install insulation and vapor retarder in accordance with manufacturer's instructions.

B. Install in exterior wall and ceiling spaces without gaps or voids. Do not compress insulation.

C. Trim insulation neatly to fit spaces. Insulate miscellaneous gaps and voids.

D. Fit insulation tightly in cavities and tightly to exterior side of mechanical and electrical services within the plane of the insulation.

END OF SECTION 072100

SECTION 078100
APPLIED FIRE PROTECTION

PART 1 GENERAL

1.01 SECTION INCLUDES

1.02 REFERENCE STANDARDS

A. UL (FRD) - Fire Resistance Directory.

PART 2 PRODUCTS

2.01 APPLIED FIRE PROTECTION ASSEMBLIES

A. Provide assemblies as indicated on drawings.

B. Provide fire resistance ratings for following building elements as required by local building code:

2.02 MATERIALS

END OF SECTION 078100

SECTION 079200
JOINT SEALANTS

PART 1 GENERAL

1.01 SECTION INCLUDES

A. Nonsag gunnable joint sealants.

B. Self-leveling pourable joint sealants.

C. Joint backings and accessories.

1.02 RELATED REQUIREMENTS

A. Section 016116 - Volatile Organic Compound (VOC) Content Restrictions: Additional requirements for sealants and primers.

1.03 REFERENCE STANDARDS

A. ASTM C661 - Standard Test Method for Indentation Hardness of Elastomeric-Type Sealants by Means of a Durometer.

B. ASTM C794 - Standard Test Method for Adhesion-in-Peel of Elastomeric Joint Sealants.

C. ASTM C920 - Standard Specification for Elastomeric Joint Sealants.

D. ASTM C1087 - Standard Test Method for Determining Compatibility of Liquid-Applied Sealants with Accessories Used in Structural Glazing Systems.

E. ASTM C1193 - Standard Guide for Use of Joint Sealants.

F. SWRI (VAL) - SWR Institute Validated Products Directory.

1.04 SUBMITTALS

A. See Section 013000 - Administrative Requirements for submittal procedures.

B. Product Data: Submit manufacturer's technical datasheets for each product to be used; include the following:

1. Physical characteristics, including movement capability, VOC content, hardness, cure time, and color availability.
2. List of backing materials approved for use with the specific product.
3. Substrates that product is known to satisfactorily adhere to and with which it is compatible.
4. Substrates the product should not be used on.
5. Substrates for which use of primer is required.
6. Substrates for which laboratory adhesion and/or compatibility testing is required.
7. Installation instructions, including precautions, limitations, and recommended backing materials and tools.
8. Sample product warranty.
9. Certification by manufacturer indicating that product complies with specification requirements.
10. SWRI Validation: Provide currently available sealant product validations as listed by SWRI (VAL) for specified sealants.

C. Color Cards for Selection: Where sealant color is not specified, submit manufacturer's color cards showing standard colors available for selection.

D. Samples for Verification: Where custom sealant color is specified, obtain directions from Architect and submit at least two physical samples for verification of color of each required sealant.

E. Test Reports: For joint sealants and backing, provide independent laboratory reports and test results showing negative asbestos containing materials content using Polarized Light Microscopy (PLM) test method.

F. Manufacturer's qualification statement.

G. Installer's qualification statement.

H. Executed warranty.

1.05 QUALITY ASSURANCE

A. Maintain one copy of each referenced document covering installation requirements on site.

B. Manufacturer Qualifications: Company specializing in manufacturing the products specified in this section with minimum five years documented experience.

C. Installer Qualifications: Company specializing in performing the work of this section and with at least three years of documented experience.

D. Testing Agency Qualifications: Independent firm specializing in performing testing and inspections of the type specified in this section.

E. Preconstruction Laboratory Testing: Arrange for sealant manufacturer(s) to test each combination of sealant, substrate, backing, and accessories.
   1. Adhesion Testing: In accordance with ASTM C794.
   2. Compatibility Testing: In accordance with ASTM C1087.
   3. Allow sufficient time for testing to avoid delaying the work.
   4. Deliver sufficient samples to manufacturer for testing.
   5. Report manufacturer's recommended corrective measures, if any, including primers or techniques not indicated in product data submittals.

F. Field Quality Control Plan:
   1. Visual inspection of entire length of sealant joints.

1.06 WARRANTY

A. See Section 017800 - Closeout Submittals for additional warranty requirements.

B. Manufacturer Warranty: Provide 2-year manufacturer warranty for installed sealants and accessories that fail to achieve a watertight seal, exhibit loss of adhesion or cohesion, or do not cure. Complete forms in Owner's name and register with manufacturer.

C. Extended Correction Period: Correct defective work within 2-year period commencing on Date of Substantial Completion.

PART 2 PRODUCTS

2.01 MANUFACTURERS

A. Nonsag Sealants:
   1. Bostik Inc: www.bostik-us.com.
   2. Dow Chemical Company: consumer.dow.com/en-us/industry/ind-building-construction.html/#sle.
   3. Hilti, Inc: www.us.hilti.com/#sle.
   4. Pecora Corporation: www.pecora.com.
   5. Sherwin-Williams Company: www.sherwin-williams.com.
   6. Sika Corporation: www.usa-sika.com.
   7. W.R. Meadows, Inc: www.wrmeadows.com/sle.
   8. Substitutions: See Section 016000 - Product Requirements.

B. Self-Leveling Sealants:
   1. Bostik Inc: www.bostik-us.com.
   2. Dow Chemical Company: consumer.dow.com/en-us/industry/ind-building-construction.html/#sle.
   3. Pecora Corporation: www.pecora.com.
   4. Sherwin-Williams Company: www.sherwin-williams.com.
   5. Sika Corporation: www.usa-sika.com.
   6. W.R. Meadows, Inc: www.wrmeadows.com/sle.
   7. Substitutions: See Section 016000 - Product Requirements.

2.02 JOINT SEALANT APPLICATIONS

A. Scope:
   1. Exterior Joints: Seal open joints, whether or not the joint is indicated on drawings, unless specifically indicated not to be sealed. Exterior joints to be sealed include, but are not limited to:
      a. Wall expansion and control joints.
      b. Joints between door, window, and other frames and adjacent construction.
      c. Joints between different exposed materials.
      d. Openings below ledge angles in masonry.
      e. Other joints indicated below.
   2. Interior Joints: Do not seal interior joints unless specifically indicated to be sealed. Interior joints to be sealed include, but are not limited to, the following items.
      a. Joints between door, window, and other frames and adjacent construction.
      b. Other joints indicated below.
   3. Do not seal the following types of joints:
      a. Intentional weep holes in masonry.
      b. Joints indicated to be treated with manufactured expansion joint cover, or some other type of sealing device.
      c. Joints where sealant is specified to be provided by manufacturer of product to be sealed.
      d. Joints where installation of sealant is specified in another section.
      e. Joints between suspended panel ceilings/grid and walls.

B. Exterior Joints: Use nonsag polyurethane sealant, unless otherwise indicated.
   1. Control and Expansion Joints in Concrete Paving: Self-leveling polyurethane "traffic-grade" sealant.

C. Interior Joints: Use non-sag polyurethane sealant, unless otherwise indicated.
   1. Joints between Fixtures in Wet Areas and Floors, Walls, and Ceilings: Mildew-resistant silicone sealant; white.

D. Interior Wet Areas: Bathrooms and restrooms; fixtures in wet areas include plumbing fixtures, countertops, cabinets, and other similar items.

2.03 JOINT SEALANTS - GENERAL

A. Sealants and Primers: Provide products with acceptable levels of volatile organic compound (VOC) content; see Section 016116.

2.04 NONSAG JOINT SEALANTS

A. Mildew-Resistant Silicone Sealant: ASTM C920, Grade NS, Uses M and A; single component, mildew resistant; not expected to withstand continuous water immersion or traffic.
   1. Color: White.

B. Polyurethane Sealant: ASTM C920, Grade NS, Uses M and A; single or multi-component; not expected to withstand continuous water immersion or traffic.
   1. Movement Capability: Plus and minus 25 percent, minimum.
   2. Hardness Range: 20 to 35, Shore A, when tested in accordance with ASTM C661.
   3. Color: Match adjacent finished surfaces.
   4. Service Temperature Range: Minus 40 to 180 degrees F.

C. Nonsag Traffic-Grade Polyurethane Sealant: ASTM C920, Grade NS, Uses M and A; single or multi-component; explicitly approved by manufacturer for continuous water immersion and traffic without the necessity to recess sealant below traffic surface.
   1. Movement Capability: Plus and minus 25 percent, minimum.
   2. Hardness Range: 40 to 50, Shore A, when tested in accordance with ASTM C661.
   3. Color: To be selected by Architect from manufacturer's full range.
   4. Service Temperature Range: Minus 40 to 180 degrees F.

2.05 SELF-LEVELING JOINT SEALANTS

A. Self-Leveling Polyurethane Sealant: ASTM C920, Grade P, Uses M and A; single or multi-component; explicitly approved by manufacturer for traffic exposure; not expected to withstand continuous water immersion .
   1. Movement Capability: Plus and minus 25 percent, minimum.
   2. Hardness Range: 35 to 55, Shore A, when tested in accordance with ASTM C661.
   3. Color: To be selected by Architect from manufacturer's standard range.
   4. Service Temperature Range: Minus 40 to 180 degrees F.

2.06 ACCESSORIES

A. Backer Rod: Cylindrical cellular foam rod with surface that sealant will not adhere to, compatible with specific sealant used, and recommended by backing and sealant manufacturers for specific application.

B. Backing Tape: Self-adhesive polyethylene tape with surface that sealant will not adhere to and recommended by tape and sealant manufacturers for specific application.

PART 3 EXECUTION

3.01 EXAMINATION

A. Verify that joints are ready to receive work.

B. Verify that backing materials are compatible with sealants.

C. Verify that backer rods are of the correct size.

D. Preinstallation Adhesion Testing: Install a sample for each test location indicated in the test plan.
   1. Test each sample as specified in PART 1 under QUALITY ASSURANCE article.
   2. Notify Architect of date and time that tests will be performed, at least seven days in advance.
   3. Record each test on Preinstallation Adhesion Test Log as indicated.
   4. If any sample fails, review products and installation procedures, consult manufacturer, or take other measures that are necessary to ensure adhesion; retest in a different location; if unable to obtain satisfactory adhesion, report to Architect.
   5. After completion of tests, remove remaining sample material and prepare joints for new sealant installation.

3.02 PREPARATION

A. Remove loose materials and foreign matter that could impair adhesion of sealant.

B. Clean joints, and prime as necessary, in accordance with manufacturer's instructions.

C. Perform preparation in accordance with manufacturer's instructions and ASTM C1193.

D. Mask elements and surfaces adjacent to joints from damage and disfigurement due to sealant work; be aware that sealant drips and smears may not be completely removable.

3.03 INSTALLATION

A. Install this work in accordance with sealant manufacturer's requirements for preparation of surfaces and material installation instructions.

B. Provide joint sealant installations complying with ASTM C1193.

C. Measure joint dimensions and size joint backers to achieve width-to-depth ratio, neck dimension, and surface bond area as recommended by manufacturer, except where specific dimensions are indicated.

D. Install bond breaker backing tape where backer rod cannot be used.

E. Install sealant free of air pockets, foreign embedded matter, ridges, and sags, and without getting sealant on adjacent surfaces.

F. Do not install sealant when ambient temperature is outside manufacturer's recommended temperature range, or will be outside that range during the entire curing period, unless manufacturer's approval is obtained and instructions are followed.

G. Nonsag Sealants: Tool surface concave, unless otherwise indicated; remove masking tape immediately after tooling sealant surface.

3.04 FIELD QUALITY CONTROL

A. See Section 014000 - Quality Requirements for additional requirements.

B. Perform field quality control inspection/testing as specified in PART 1 under QUALITY ASSURANCE article.

C. Remove and replace failed portions of sealants using same materials and procedures as indicated for original installation.

3.05 POST-OCCUPANCY

A. Post-Occupancy Inspection: Perform visual inspection of entire length of project sealant joints at a time that joints have opened to their greatest width, i.e., at low temperature in thermal cycle. Report failures immediately and repair them.

END OF SECTION 079200

SECTION 080671
DOOR HARDWARE SCHEDULE

PART 1 GENERAL

1.01 SECTION INCLUDES

A. Preliminary schedule of door hardware sets for swinging, sliding, folding, and other door types as indicated on drawings.

1.02 RELATED REQUIREMENTS

A. Section 087100 - Door Hardware: Requirements to comply with in coordination with this section.

1.03 REFERENCE STANDARDS

A. BHMA (CPD) - Certified Products Directory.

B. BHMA A156.3 - Exit Devices.

C. BHMA A156.5 - Cylinders and Input Devices for Locks.

D. BHMA A156.13 - Mortise Locks and Latches.

E. BHMA A156.18 - Standard for Materials and Finishes.

F. DHI (H&S) - Sequence and Format for the Hardware Schedule.

1.04 PROJECT INFORMATION

A. Project Name: ECC West Building Renovation and Site Improvements.
   1. Location: Early Childhood Center | 14605 Clayton Road, Chesterfield, MO 63011

B. Architect: Bond Architects, Inc
   1. Phone Number: 314-863-4994

C. Contractor: To Be Determined.

1.05 SUBMITTALS

A. See Section 013000 - Administrative Requirements, for submittal procedures.

B. Comply with submittal requirements as indicated in Section 087100.

PART 2 PRODUCTS

2.01 MANUFACTURERS

A. Only manufacturers listed in Section 087100 are considered acceptable.

B. Obtain each type of door hardware as indicated from a single manufacturer and single supplier.

C. Products are listed and certified compliant with specified standards by BHMA (CPD).

D. Manufacturer's Abbreviations: Coordinate with manufacturers listed in Section 087100.
   1. BAS - Best Access Systems.
   2. HGR - Hager.
   3. HES - HES.
   4. IVE - Ives.
   5. LCN - LCN.
   6. McK - McKinney.
   7. NGP - National Guard Products.
   8. PEM - Pemko.
   9. RIX - Rixson.
   10. ROC - Rockwood.
   11. SA - Sargent.
   12. SCH - Schlage.
   13. VD - Von Duprin.

2.02 LOCK FUNCTION CODES

A. Function Codes for Cylindrical Locks: Complying with BHMA A156.5.

B. Function Codes for Mortise Locks: Complying with BHMA A156.13.

C. Function Codes for Exit Devices: Complying with BHMA A156.3.

2.03 FINISHES

A. Finishes: Complying with BHMA A156.18.

1. Code 626: Satin chromium plated over nickel, with brass or bronze base material (former US equivalent US26D).

PART 3 EXECUTION

3.01 DOOR HARDWARE SCHEDULE

A. Organize listing of door hardware components within each hardware set in compliance with 10-Part scheduling sequence indicated in DHI (H&S), unless otherwise indicated.

3.02 HARDWARE SET # 3.02: "INTRUDER NOT FIRE RATED"

A. For use on Door Number(s): 2203, 2204, 2903, 2904.

B. Provide for each Single (SGL) door(s).

UNITS	LOCK	ITEM	DESCRIPTION	FINISH	MFR
3 EA		HINGE, 4 1/2", STD WT	BB1279 4-1/2 X 4-1/2 X NRP	US26D	HAG
1 EA		CYLINDRICAL LOCK WITH THRU BOLTS	9K3-7-IN-14-D-S3 X L/C	626	BES
1 EA		KICK PLATE	K1050 X 4BE X 10 X 34	US32D	ROC
1 EA		CLOSER	4040XP.HWPA.689.TBSRT	689	LCN
1 EA		WALL STOP	WS406/407-CCV	US26D	IVE
3 EA		SILENCER	SR64	GRY	IVE

END OF SECTION 080671

SECTION 081213
HOLLOW METAL FRAMES

PART 1 GENERAL

1.01 SECTION INCLUDES

A. Non-fire-rated hollow metal frames for non-hollow metal doors.

B. Fire-rated hollow metal frames for non-hollow metal doors.

1.02 RELATED REQUIREMENTS

A. Section 087100 - Door Hardware: Hardware, silencers, and weatherstripping.

B. Section 099000 - Painting and Coating: Field painting.

1.03 REFERENCE STANDARDS

A. ADA Standards - 2010 ADA Standards for Accessible Design.

B. ANSI/SDI A250.4 - Test Procedure and Acceptance Criteria for Physical Endurance for Steel Doors, Frames and Frame Anchors.

C. ANSI/SDI A250.8 - Specifications for Standard Steel Doors and Frames (SDI-100).

D. ANSI/SDI A250.10 - Test Procedure and Acceptance Criteria for Prime Painted Steel Surfaces for Steel Doors and Frames.

E. ASTM A653/A653M - Standard Specification for Steel Sheet, Zinc-Coated (Galvanized) or Zinc-Iron Alloy-Coated (Galvannealed) by the Hot-Dip Process.

F. ASTM A1008/A1008M - Standard Specification for Steel, Sheet, Cold-Rolled, Carbon, Structural, High-Strength Low-Alloy, High-Strength Low-Alloy with Improved Formability, Required Hardness, Solution Hardened, and Bake Hardenable.

G. ASTM A1011/A1011M - Standard Specification for Steel, Sheet and Strip, Hot-Rolled, Carbon, Structural, High-Strength Low-Alloy, High-Strength Low-Alloy with Improved Formability, and Ultra-High Strength.

H. BHMA A156.115 - Hardware Preparation in Steel Doors and Frames.

I. ICC A117.1 - Accessible and Usable Buildings and Facilities.

J. NAAMM HMMA 830 - Hardware Selection for Hollow Metal Doors and Frames.

K. NAAMM HMMA 831 - Hardware Locations for Hollow Metal Doors and Frames.

L. NAAMM HMMA 861 - Guide Specifications for Commercial Hollow Metal Doors and Frames.

M. NFPA 80 - Standard for Fire Doors and Other Opening Protectives.

N. SDI 117 - Manufacturing Tolerances for Standard Steel Doors and Frames.

O. UL 10C - Standard for Positive Pressure Fire Tests of Door Assemblies.

1.04 SUBMITTALS

A. See Section 013000 - Administrative Requirements for submittal procedures.

B. Product Data: Materials and details of design and construction, hardware locations, reinforcement type and locations, anchorage and fastening methods, and finishes.

C. Shop Drawings: Details of each opening, showing elevations, glazing, frame profiles, and identifying location of different finishes, if any.

D. Manufacturer's Certificate: Certification that products meet or exceed specified requirements.

E. Manufacturer's qualification statement.

F. Installer's qualification statement.

QUALITY ASSURANCE

A. Manufacturer Qualifications: Company specializing in manufacturing products specified in this section, with not less than three years of documented experience.

B. Installer Qualifications: Company specializing in performing work of the type specified and with at least three years of documented experience.

C. Maintain at project site copies of reference standards relating to installation of products specified.

PART 2 PRODUCTS

2.01 MANUFACTURERS

A. Hollow Metal Frames with Integral Casings:
   1. Ceco Door, an Assa Abloy Group company: www.assaabloydss.com/#sle.
   2. Republic Doors, an Allegion brand: www.republicdoor.com/#sle.
   3. Mesker Door LLC; www.meskerdoor.com.
   4. Substitutions: See Section 016000 - Product Requirements.

2.02 PERFORMANCE REQUIREMENTS

A. Door Frame Type: Provide hollow metal door frames with integral casings.

B. Steel Sheet: Comply with one or more of the following requirements; galvannealed steel complying with ASTM A653/A653M, cold-rolled steel complying with ASTM A1008/A1008M, or hot-rolled pickled and oiled (HRPO) steel complying with ASTM A1011/A1011M, commercial steel (CS) Type B, for each.

C. Accessibility: Comply with ICC A117.1 and ADA Standards.

D. Combined Requirements: If a particular door and frame unit is indicated to comply with more than one type of requirement, comply with the specified requirements for each type; for instance, an exterior frame that is also indicated as being sound-rated must comply with the requirements specified for exterior frames and for sound-rated frames; where two requirements conflict, comply with the most stringent.

E. Hardware Preparations, Selections and Locations: Comply with BHMA A156.115, NAAMM HMMA 830, NAAMM HMMA 831 or ANSI/SDI A250.8 (SDI-100) in accordance with specified requirements.

F. Frames in Masonry Walls: Size to suit masonry coursing with head member 4 inches high to fill opening without cutting masonry units.

2.03 HOLLOW METAL DOOR FRAMES WITH INTEGRAL CASINGS

A. Frame Finish: Factory primed and field finished.

B. Interior Door Frames, Non-Fire Rated: Face welded type.
   1. Based on SDI Standards: ANSI/SDI A250.8 (SDI-100).
      a. Level 2 - Heavy-duty.
      b. Physical Performance Level C, 250,000 cycles; in accordance with ANSI/SDI A250.4.
      c. Frame Metal Thickness: 18 gauge, 0.042 inch, minimum.

C. Fire-Rated Door Frames: Face welded type.
   1. Based on SDI Standards: ANSI/SDI A250.8 (SDI-100).
      a. Level 2 - Heavy-duty.
      b. Physical Performance Level B, 500,000 cycles; in accordance with ANSI/SDI A250.4.
      c. Frame Metal Thickness: 16 gage, 0.053 inch, minimum.
   2. Fire Rating: As indicated on drawings, tested in accordance with UL 10C or NFPA 252 ("positive pressure fire tests").

2.04 FINISHES

A. Primer: Rust-inhibiting, complying with ANSI/SDI A250.10, door manufacturer's standard.

B. Bituminous Coating: Cold-applied asphalt mastic, compounded for 15 mil, 0.015 inch dry film thickness (DFT) per coat; provide inert-type noncorrosive compound free of asbestos fibers, sulfur components, and other deleterious impurities.
   1. Fire-Rated Frames: Comply with fire rating requirements indicated.

2.05 ACCESSORIES

A. Silencers: Resilient rubber, fitted into drilled hole; provide three on strike side of single door, three on center mullion of pairs, and two on head of pairs without center mullions.

B. Temporary Frame Spreaders: Provide for factory- or shop-assembled frames.

PART 3 EXECUTION

3.01 EXAMINATION

A. Verify existing conditions before starting work.

B. Verify that opening sizes and tolerances are acceptable.

C. Verify that finished walls are in plane to ensure proper door alignment.

3.02 INSTALLATION

A. Install frames in accordance with manufacturer's instructions and related requirements of specified frame standards or custom guidelines indicated.

B. Install fire rated units in accordance with NFPA 80.

C. Coordinate frame anchor placement with wall construction.

D. Install door hardware as specified in Section 087100 - Door Hardware.

E. Coordinate installation of electrical connections to electrical hardware items.

F. Touch up damaged factory finishes.

3.03 TOLERANCES

A. Clearances Between Door and Frame: Comply with related requirements of specified frame standards or custom guidelines indicated in accordance with SDI 117 or NAAMM HMMA 861.

B. Maximum Diagonal Distortion: 1/16 inch measured with straight edges, crossed corner to corner.

3.04 SCHEDULE - SEE DRAWINGS

END OF SECTION 081213

SECTION 081416
FLUSH WOOD DOORS

PART 1 GENERAL

1.01 SECTION INCLUDES

A. Flush wood doors; flush and flush glazed configuration; fire-rated and non-rated.

1.02 RELATED REQUIREMENTS

A. Section 087100 - Door Hardware.

B. Section 088000 - Glazing.

1.03 REFERENCE STANDARDS

A. AWI/AWMAC/WI (AWS) - Architectural Woodwork Standards, 2nd Edition.

B. AWMAC/WI (NAAWS) - North American Architectural Woodwork Standards.

C. NFPA 80 - Standard for Fire Doors and Other Opening Protectives.

D. NFPA 105 - Standard for Smoke Door Assemblies and Other Opening Protectives.

E. UL 10C - Standard for Positive Pressure Fire Tests of Door Assemblies.

F. UL 1784 - Standard for Air Leakage Tests of Door Assemblies and Other Opening Protectives.

1.04 SUBMITTALS

A. See Section 013000 - Administrative Requirements for submittal procedures.

B. Product Data: Indicate door core materials and construction; veneer species, type and characteristics. Include certification that doors are manufactured by the hot pressed method, bonding faces, crossbands, and core together in a single operation with Type 1 adhesive.

C. Shop Drawings: Show doors and frames, elevations, sizes, types, swings, undercuts, beveling, blocking for hardware, factory machining, factory finishing, cutouts for glazing and other details.

D. Samples: Submit two samples of door veneer, 4 by 4 inch in size illustrating wood grain, stain color, and sheen.

E. Warranty, executed in Owner's name.

1.05 QUALITY ASSURANCE

A. Manufacturer Qualifications: Company specializing in manufacturing the products specified in this section, with not less than three years of documented experience.

B. Installer Qualifications: Company specializing in performing work of the type specified in this section, with not less than three years of documented experience.

1.06 DELIVERY, STORAGE, AND HANDLING

A. Package, deliver and store doors in accordance with specified quality standard.

B. Accept doors on site in manufacturer's packaging, and inspect for damage.

C. Protect doors with resilient packaging sealed with heat shrunk plastic. Do not store in damp or wet areas; or in areas where sunlight might bleach veneer. Seal top and bottom edges with tinted sealer if stored more than one week. Break seal on site to permit ventilation.

1.07 WARRANTY

A. See Section 017800 - Closeout Submittals for additional warranty requirements.

B. Manufacturer Warranty: Provide manufacturer's warranty on interior doors for the life of the installation. Complete forms in Owner's name and register with manufacturer.

1. Include coverage for delamination of veneer, warping beyond specified installation tolerances, defective materials, and telegraphing core construction.

PART 2 PRODUCTS

2.01 MANUFACTURERS

A. Wood Veneer Faced Doors:
   1. Construction Specialties, Inc; Acrovyn Flush Doors: www.c-sgroup.com/#sle.
   2. Eggers Industries: www.eggersindustries.com/#sle.
   3. Graham Wood Doors: www.grahamdoors.com/#sle.
   4. Haley Brothers: www.haleybros.com/#sle.
   5. Masonite Architectural: www.architectural.masonite.com/#sle.
   6. Oregon Door; Architectural Series: www.oregondoor.com/#sle.
   7. VT Industries.www.vtindustries.com
   8. Substitutions: See Section 016000 - Product Requirements.

2.02 DOORS

A. Interior Doors: 1-3/4 inches thick unless otherwise indicated; flush construction.
   1. Provide solid core doors at each location.
   2. Fire Rated Doors: Tested to ratings indicated on drawings in accordance with UL 10C - Positive Pressure; Underwriters Laboratories Inc. (UL) labeled without any visible seals when door is closed.
   3. Smoke and Draft Control Doors (Indicated as "S" on Drawings): In addition to required fire rating, provide door assemblies tested in accordance with UL 1784 with maximum air leakage of 3.0 cfm per sq ft of door opening at 0.10 inch wg pressure at both ambient and elevated temperatures for "S" label; if necessary, provide additional gasketing or edge sealing.
   4. Wood veneer facing with factory transparent finish where indicated on drawings.

2.03 DOOR AND PANEL CORES

A. Non-Rated Solid Core and 20 Minute Rated Doors: Type particleboard core (PC), plies and faces as indicated.

B. Fire-Rated Doors: Mineral core type, with fire resistant composite core (FD), plies and faces as indicated above; with core blocking as required to provide adequate anchorage of hardware without through-bolting.

2.04 DOOR FACINGS

A. Veneer Facing for Transparent Finish: Red oak, veneer grade in accordance with quality standard indicated, plain sliced (flat cut), with book match between leaves of veneer, running match of spliced veneer leaves assembled on door or panel face.
   1. Vertical Edges: Same species as face veneer.
   2. "Running Match" each pair of doors and doors in close proximity to each other.
   3. "Pair Match" each pair of doors; "Set Match" pairs of doors within 10 feet of each other when doors are closed.

B. Facing Adhesive: - Type I - waterproof.

2.05 DOOR CONSTRUCTION

A. Doors shall be 5-ply and comply with AWI/WDMA PC5 construction. Doors shall be manufactured by the hot-press method, bonding faces, crossbands and core together in a single operation with Type I adhesive. Doors manufactured by cold-pressing 2 or 3-ply pre-manufactured door skins to multiple cores in the same press will not be accepted.

B. Fabricate doors in accordance with door quality standard specified.

C. Cores Constructed with stiles and rails:
   1. Provide solid blocks at lock edge for hardware reinforcement.
   2. Provide solid blocking for other throughbolted hardware.

D. Where supplementary protective edge trim is required, install trim after veneer facing has been applied full-width.

E. Glazed Openings: Non-removable stops on non-secure side; sizes and configurations as indicated on drawings.

F. Factory machine doors for hardware other than surface-mounted hardware, in accordance with hardware requirements and dimensions.

G. Factory fit doors for frame opening dimensions identified on shop drawings, with edge clearances in accordance with specified quality standard.
   1. Exception: Doors to be field finished.

H. Provide edge clearances in accordance with the quality standard specified.

2.06 FINISHES - WOOD VENEER DOORS

A. Finish work in accordance with AWI/AWMAC/WI (AWS) or AWMAC/WI (NAAWS), Section 5 - Finishing for grade specified and as follows:
   1. Transparent:
      a. System - 12, Polyurethane, Water-based.
      b. Stain: As selected by Architect.
      c. Sheen: Semigloss.

B. Factory finish doors in accordance with approved sample.

C. Seal door top edge with color sealer to match door facing.

2.07 ACCESSORIES

A. Metal Louvers:
   1. Louver Blade: Inverted V blade, sight proof, light proof.

PART 3 EXECUTION

3.01 EXAMINATION

A. Verify existing conditions before starting work.

B. Verify that opening sizes and tolerances are acceptable.

C. Do not install doors in frame openings that are not plumb or are out-of-tolerance for size or alignment.

3.02 INSTALLATION

A. Install doors in accordance with manufacturer's instructions and specified quality standard.
   Install fire-rated doors in accordance with NFPA 80 requirements.
   1. Install smoke and draft control doors in accordance with NFPA 105 requirements.

B. Factory-Finished Doors: Do not field cut or trim; if fit or clearance is not correct, replace door.

C. Use machine tools to cut or drill for hardware.

D. Coordinate installation of doors with installation of frames and hardware.

E. Install door louvers plumb and level.

3.03 TOLERANCES

A. Comply with specified quality standard for fit and clearance tolerances.

B. Comply with specified quality standard for telegraphing, warp, and squareness.

3.04 ADJUSTING

A. Adjust doors for smooth and balanced door movement.

B. Adjust closers for full closure.

3.05 SCHEDULE - SEE DRAWINGS

END OF SECTION 081416

SECTION 083100
ACCESS DOORS AND PANELS

PART 1 GENERAL

1.01 SECTION INCLUDES

A. Wall- and ceiling-mounted access units.

1.02 RELATED REQUIREMENTS

A. Section 099123 - Interior Painting: Field paint finish.

1.03 REFERENCE STANDARDS

1.04 SUBMITTALS

A. See Section 013000 - Administrative Requirements for submittal procedures.

B. Product Data: Provide sizes, types, finishes, hardware, scheduled locations, and details of adjoining work.

C. Project Record Documents: Record actual locations of each access unit.

1.05 QUALITY ASSURANCE

A. Manufacturer Qualifications: Company specializing in manufacturing the products specified in this section with minimum three years documented experience.

B. Installer Qualifications: Company specializing in performing work of the type specified and with at least three years documented experience.

PART 2 PRODUCTS

2.01 ACCESS DOORS AND PANELS ASSEMBLIES

2.02 WALL AND CEILING MOUNTED UNITS

A. Wall- and Ceiling-Mounted Units: Factory-fabricated door and frame, fully assembled units with corner joints welded, filled and ground flush; square and without rack or warp; coordinate requirements with type of installation assembly being used for each unit.
   1. Material: Aluminum.
   2. Style: Exposed frame with door surface flush with frame surface.
      a. Gypsum Board Mounting Criteria: Use drywall bead type frame.
   3. Door Style: Single thickness with rolled or turned in edges.
   4. Heavy-Duty Frames: 14-gauge, 0.0747-inch minimum thickness.
   5. Single Steel Sheet Door Panels: 16-gauge, 0,0625-inch minimum thickness.
   6. Door Panels to Receive Wall/Ceiling Finish: Surface recessed 5/8 inch back from wall face.
   7. Aluminum Finish: Natural brushed.
   8. Hardware:
      a. Hinges for Non-Fire-Rated Units: Concealed, constant force closure spring type.
      b. Handle: Fixed.
      c. Latch/Lock: Cylinder lock-operated cam latch, two keys for each unit.
      d. Number of Locks/Latches Required: As recommended by manufacturer for size of unit.
      e. Inside Latch Release: Mechanism that allows door/panel to be opened from inside.
      f. Gasketing: Extruded neoprene, around perimeter of door panel.

PART 3 EXECUTION

3.01 EXAMINATION

A. Verify that rough openings are correctly sized and located.

3.02 PREPARATION

A. Clean surfaces thoroughly prior to proceeding with this work.

B. Prepare surfaces using methods recommended by manufacturer for applicable substrates in accordance with project conditions.

3.03 INSTALLATION

A. Install units in accordance with manufacturer's instructions.

B. Install frames plumb and level in openings, and secure units rigidly in place.

C. Position units to provide convenient access to concealed equipment when necessary.

END OF SECTION 083100

SECTION 087100
DOOR HARDWARE

PART 1 GENERAL

1.01 SECTION INCLUDES

A. Hardware for wood and FRP doors.
B. Hardware for fire-rated doors.
C. Electrically operated and controlled hardware.
D. Low Energy Power Automatic Operators
E. Thresholds.
F. Weatherstripping and gasketing.

1.02 RELATED REQUIREMENTS

A. Section 064100 - Architectural Wood Casework: Cabinet hardware.
B. Section 079200 - Joint Sealants: Sealants for setting exterior door thresholds.
C. Section 080671 - Door Hardware Schedule: Schedule of door hardware sets.
D. Section 081113 - Hollow Metal Doors and Frames.
E. Section 081416 - Flush Wood Doors.
F. Section 081613 - Fiberglass Doors.
G. Section 083490 - Tornado-Resistant Assemblies: Tornado doors for storm shelters
H. Section 271000 - Structured Cabling - Wiring for Access Control homerun to data room
I. Section 284600 - Fire Detection and Alarm: Electrical connection to activate door closers.

1.03 REFERENCE STANDARDS

A. BHMA A156.1 - Standard for Butts and Hinges.
B. BHMA A156.2 - Bored and Preassembled Locks and Latches.
C. BHMA A156.3 - Exit Devices.
D. BHMA A156.4 - Door Closers and Pivots.
E. BHMA A156.5 - Cylinders and Input Devices for Locks.
F. BHMA A156.6 - Standard for Architectural Door Trim.
G. BHMA A156.7 - Template Hinge Dimensions.
H. BHMA A156.8 - Door Controls - Overhead Stops and Holders.
I. BHMA A156.13 - Mortise Locks and Latches.
J. BHMA A156.15 - Release Devices - Closer Holder, Electromagnetic and Electromechanical.
K. BHMA A156.16 - Standard for Auxiliary Hardware.
L. BHMA A156.17 - Self Closing Hinges & Pivots.
M. BHMA A156.18 - Standard for Materials and Finishes.
N. BHMA A156.21 - Thresholds.
O. BHMA A156.22 - Standard for Gasketing.
P. BHMA A156.26 - Standard for Continuous Hinges.
Q. BHMA A156.30 - Standard for High Security Cylinders.
R. BHMA A156.31 - Electric Strikes and Frame Mounted Actuators.
S. DHI WDHS.3 - Recommended Locations for Architectural Hardware for Flush Wood Doors.
T. NFPA 80 - Standard for Fire Doors and Other Opening Protectives.

U. UL (DIR) - Online Certifications Directory.

V. UL 437 - Standard for Key Locks.

1.04 ADMINISTRATIVE REQUIREMENTS

A. Coordinate the manufacture, fabrication, and installation of products that door hardware is installed on.

B. Furnish templates for door and frame preparation to manufacturers and fabricators of products requiring internal reinforcement for door hardware.

1.05 SUBMITTALS

A. See Section 013000 - Administrative Requirements for submittal procedures.

B. Product Data: Manufacturer's catalog literature for each type of hardware, marked to clearly show products to be furnished for this project, and includes construction details, material descriptions, finishes, and dimensions and profiles of individual components.

C. Shop Drawings - Door Hardware Schedule: Submit detailed listing that includes each item of hardware to be installed on each door. Use door numbering scheme as included in Contract Documents.
   1. Prepared by or under supervision of Architectural Hardware Consultant (AHC).
   2. Provide complete description for each door listed.

D. Shop Drawings - Electrified Door Hardware: Submit diagrams for power, signal, and control wiring for electrified door hardware that include details of interface with building safety and security systems. Provide elevations and diagrams for each electrified door opening as follows:
   1. Prepared by or under supervision of Architectural Hardware Consultant (AHC) and Electrified Hardware Consultant (EHC).
   2. Elevations: Submit front and back elevations of each door opening showing electrified devices with connections installed and an operations narrative describing how opening operates from either side at any given time.
   3. Diagrams: Submit point-to-point wiring diagram that shows each device in door opening system with related colored wire connections to each device.

1.06 QUALITY ASSURANCE

A. Manufacturer Qualifications: Company specializing in manufacturing products specified in this section with minimum five years of documented experience.

B. Installer Qualifications: Company specializing in performing work of the type specified for commercial door hardware with at least five years of documented experience.

1.07 INSPECTION AND TESTING

A. Submit a written report of the results of functional testing and inspection for fire door assemblies, in compliance with NFPA 80.
   1. Written report to be provided to the Owner and be made available to the Authority Having Jurisdiction (AHJ).
   2. Report to include the door number for each fire door assembly, door location, door and frame material, fire rating, and summary of deficiencies.

1.08 DELIVERY, STORAGE, AND HANDLING

A. Package hardware items individually; label and identify each package with door opening code to match door hardware schedule.

1.09 WARRANTY

A. See Section 017800 - Closeout Submittals for additional warranty requirements.

B. Manufacturer's Warranty: Provide warranty against defects in material and workmanship for period indicated. Complete forms in Owner's name and register with manufacturer.
   1. Closers: Five years, minimum.
   2. Exit Devices: Three years, minimum.

3. Locksets and Cylinders: Three years, minimum.
4. Other Hardware: Two years, minimum.

PART 2 PRODUCTS

2.01 HINGES

A. Manufacturers:
   1. McKinney; an Assa Abloy Group company: www.assaabloydss.com.
   2. Hager Companies: www.hagerco.com.
   3. Models:
      a. Interior doors 36" wide and less, standard weight steel:
         1) Hager, BB1279.
      b. Swing clear at double egress, heavy weight steel:
         1) Hager, BB1262.
      c. Corrosive area doors 36" wide and less, standard weight stainless steel:
         1) Hager, BB1191.

B. Substitutions: Not permitted.

C. Hinges: Comply with BHMA A156.1, Grade 1.
   1. Self Closing Hinges: Comply with BHMA A156.17.
   2. Butt Hinges: Comply with BHMA A156.1 and BHMA A156.7 for templated hinges.
      a. Provide hinge width required to clear surrounding trim.
   3. Continuous Hinges: Comply with BHMA A156.26.
   4. Provide hinges on every swinging door.
   5. Provide five-knuckle full mortise butt hinges unless otherwise indicated.
   6. Provide ball-bearing hinges at each door with closer.
   7. Provide non-removable pins on exterior outswinging doors.
   8. Provide power transfer hinges where electrified hardware is mounted in door leaf.
   9. Provide following quantity of butt hinges for each door:
      a. Doors up to 60 inches High: Two hinges.
      b. Doors From 60 inches High up to 90 inches High: Three hinges.
      c. Doors 84 inches High and over: Butt hinges not allowed, use continuous gear type hinge.
      d. Doors 36 inches Wide and over: Butt hinges not allowed, use continuous gear type hinge.

2.02 HINGES, CONTINUOUS GEAR TYPE

A. Manufacturers:
   1. Assa Abloy- McKinney or Pemko: www.assaabloydss.com.
   2. Hager Companies Roton: www.hagerco.com.
   3. Models:
      a. For new frames:
         1) McKinney, MCK-25HD: only use on wired card readers
         2) Roton, 780-224HD
      b. For retrofits to existing frames:
         1) McKinney, MCK-54D: only use on wired card readers
         2) Roton, 780-053HD.
   4. Substitutions: Not permitted.

2.03 FLUSHBOLTS AND COORDINATORS

A. Manufacturers:
   1. Rockwood, an Assa Abloy Group company: www.assaabloydss.com.
   2. Hager Companies: www.hagerco.com.
   3. Ives, an Allegion brand: www.allegion.com/us.
   4. Trimco: www.trimcohardware.com.

5. Models:
    a. Automatic at hollow metal door:
        1) Ives, FB31P.
        2) Rockwood, 2842.
        3) Trimco, 3810.
        4) Hager 292D
    b. Manual at hollow metal door:
        1) Ives, FB358.
        2) Rockwood, 550.
        3) Trimco, 3917.
        4) Hager 282D
6. Substitutions: Not permitted.

B. Flush Bolts: Comply with BHMA A156.16, Grade 1.
1. Flush Bolt Throw: 3/4 inch, minimum.
2. Provides extension bolts in leading edge of door, one bolt into floor, one bolt into top of frame.
    a. Pairs of Swing Doors: At inactive leaves, provide flush bolts of type as required to comply with code.
3. Provide dustproof floor strike for bolt into floor, except at metal thresholds.
4. Automatic Flush Bolts: Automatically latch upon closing of door; automatic retraction of bolts when active leaf is opened; located on inactive leaf of pair of doors.

2.04 EXIT DEVICES

A. Manufacturers:
1. Von Duprin, an Allegion brand: www.allegion.com/us.
2. Models:
    a. Von Duprin, XP99 series, 17 lever type.
3. Substitutions: Not permitted.

B. Exit Devices: Comply with BHMA A156.3, Grade 1.
1. Lever design to match lockset trim.
2. Provide cylinder with cylinder dogging or locking trim.
3. Provide exit devices properly sized for door width and height.
4. Provide strike as recommended by manufacturer for application indicated.
5. Provide less bottom rod (LBR) at scheduled locations to eliminate use of floor mounted strikes.
6. Provide UL (DIR) listed exit device assemblies for fire-rated doors and panic device assemblies for non-fire-rated doors.
7. For electrical options, provide quick connect plug-in pre-wired connectors.

2.05 ACCESS CONTROL LOCKS

A. Manufacturer - Access Control Lock and Exit Device:
1. Assa Abloy Brands; Sargent: www.assaabloydss.com.
2. Must be provided and installed by a manufacturer's certified integrator.
3. Model: 70 IN220 231 BIPS B EK1 NJ-### hardwired application.
    a. ### = hand:
        1) RHR is right hand reversed.
        2) LHR is left hand reversed.
    b. Coordinate wiring connection for access control device installed from each device location back to the data panel in the nearest MDF or IDF room.
        1) Final connections at patch panel to be provided by the Owner.
    c. Access Control programming is to be provided by the Owner.

B. Manufacturer - Exterior Trim

2.06 ELECTRIC STRIKES

A. Manufacturers:
   1. HES; an Assa Abloy Group company: www.assaabloydss.com.
   2. Models:
      a. For cylindrical locksets:
         1) HES, 1006.
      b. For rim exit device:
         1) HES, 9600.
   3. Substitutions: Not permitted.

B. Electric Strikes: Comply with BHMA A156.31, Grade 1.
   1. Provide UL (DIR) listed burglary-resistant electric strike; style to suit locks.
   2. Provide non-handed 24 VDC electric strike suitable for door frame material and scheduled lock configuration.
   3. Provide field selectable Fail Safe/Fail Secure modes.
   4. Provide transformer and rectifier as necessary for complete installation.
   5. Connect electric strikes into fire alarm where non-rated doors are scheduled to release with fire or sprinkler alarm condition.

2.07 LOCK CYLINDERS

A. Manufacturers:
   1. Best Access Systems, division of Stanley Access Technologies LLC: www.bestaccess.com.
   2. Substitutions: Not permitted.

B. Lock Cylinders: Provide key access on outside of each lock, unless otherwise indicated.
   1. Provide standard type cylinders, Grade 1, with seven-pin core in compliance with BHMA A156.5 at locations indicated.
   2. Provide high security mechanical type cylinders, Grade 1, with seven-pin core in compliance with BHMA A156.30 or UL 437 at locations indicated.
   3. Provide cylinders from same manufacturer as locking device.
   4. Provide cams and/or tailpieces as required for locking devices.
   5. Within specific Door Sections, when provisions for lock cylinder are being referenced to this Section, provide specified lock cylinder and keyed to building keying system, unless otherwise indicated.
   6. Provide exit only on exterior doors unless scheduled otherwise.

2.08 CYLINDRICAL LOCKS

A. Manufacturers:
   1. Best Access Systems, division of Stanley Access Technologies LLC: www.bestaccess.com.
   2. Model: Series 9K37-[*Function*]-14LS3626
   3. Substitutions: Not permitted.

B. Cylindrical Locks (Bored): Comply with BHMA A156.2, Grade 1, 4000 Series.
   1. Bored Hole: 2-1/8 inch diameter.
   2. Latchbolt Throw: 1/2 inch, minimum.
   3. Backset: 2-3/4 inch unless otherwise indicated.
   4. Strikes: Provide manufacturer's standard strike for each latchset or lockset with strike box and curved lip extending to protect frame in compliance with indicated requirements.
      a. Finish: To match lock or latch.
   5. Provide a lock for each door, unless otherwise indicated that lock is not required.
   6. Provide an intruder lockset for swinging door where hardware set is not indicated.
   7. Trim: Provide lever handle or pull trim on outside of each lock, unless otherwise indicated.

2.09 MORTISE LOCKS

A. Manufacturers:
   1. Best Access Systems, division of Stanley Access Technologies LLC; [Series 45H7-Function -14S626- [Door Hand]-LC.]: www.bestaccess.com.
   2. Substitutions: Not permitted.

B. Mortise Locks: Comply with BHMA A156.13, Grade 1, Security, 1000 Series.
   1. Latchbolt Throw: 3/4 inch, minimum.
   2. Deadbolt Throw: 1 inch, minimum.
   3. Backset: 2-3/4 inch unless otherwise indicated.
   4. Strikes: Provide manufacturer's standard strike for each latchset or lockset with strike box and curved lip extending to protect frame in compliance with indicated requirements.
      a. Finish: To match lock or latch.

2.10 DOOR PULLS AND PUSH PLATES

A. Manufacturers:
   1. Rockwood or McKinney; an Assa Abloy Group company: www.assaabloydss.com.
   2. Hager Companies: www.hagerco.com.
   3. Trimco: www.trimcohardware.com.
   4. Models:
      a. Push Plate:
         1) McKinney, P054.
         2) Rockwood, 70E.
         3) Trimco, 1001-9
         4) Hager 30S
      b. Pull Plate:
         1) McKinney, DP803
         2) Rockwood, 111 x 70C
         3) Trimco, 1018-3B
         4) Hager 33G
   5. Substitutions: Not permitted.

B. Door Pulls and Push Plates: Comply with BHMA A156.6.
   1. Pull Type: Straight, unless otherwise indicated.
   2. Push Plate Type: Flat, with square corners, unless otherwise indicated.
      a. Edges: Beveled, unless otherwise indicated.
   3. Material: Stainless steel, unless otherwise indicated.
   4. Provide door pulls and push plates on doors without a lockset, latchset, exit device, or auxiliary lock unless otherwise indicated.
   5. On solid doors, provide matching door pull and push plate on opposite faces.

2.11 COORDINATORS

A. Manufacturers:
   1. Ives, an Allegion brand: www.allegion.com/us.
   2. Trimco: www.trimcohardware.com.
   3. Hager Companies; www.hagerco.com.
   4. Models:
      a. Ives, CORG
      b. Trimco, 3093
      c. Hager 298D
   5. Substitutions: Not permitted.

B. Coordinators: Provide on doors having closers and self-latching or automatic flush bolts to ensure that inactive door leaf closes before active door leaf.
   1. Type: Bar, unless otherwise indicated.

2. Material: Stainless steel, unless otherwise indicated.
3. Ensure that coordination of other door hardware affected by placement of coordinators and carry bar is applied properly for completely operable installation.

2.12 CLOSERS

A. Manufacturers; Surface Mounted:
   1. Norton; an Assa Abloy Group company: www.assaabloydss.com.
   2. LCN, an Allegion brand: www.allegion.com/us/#sle.
   3. Models:
      a. Interior doors with multi-size tri-style packaging:
         1) Norton, 7500
         2) LCN, 4040XP
      b. Exterior doors with heavy duty non-hold open parallel arm with spring-stop:
         1) Norton, 7500 CPS
         2) LCN, 4040XP-CUSH
   4. Substitutions: Not permitted.

B. Closers: Comply with BHMA A156.4, Grade 1.
   1. Type: Surface mounted to door.
   2. Provide door closer on each exterior door.
   3. Provide door closer on each fire-rated and smoke-rated door.
      a. Spring hinges are not an acceptable self-closing device, unless otherwise indicated.
   4. Where an overlapping astragal is included on pairs of swinging doors, provide coordinator to ensure door leaves close in proper order.
   5. At corridor entry doors, mount closer on room side of door.
   6. At outswinging exterior doors, mount closer on interior side of door.

2.13 LOW ENERGY POWER AUTOMATIC OPERATORS

A. Electrified Atomatic Operators: ADA compliant type.

B. Provide wireless wall mounted actuators by same manufacturer.

C. Provide weather resistant actuators for exterior locations.

D. Operator motor voltage shall be 120 VAC.

E. Provide extended cover over operator at double door openings.

F. Provide ADA accessible symbols engraved on actuators and stickers on doors in accordance with ANSI A-117.1.

G. Manufacturers:
   1. Assa Abloy: www.assaabloy.com
   2. Models:
      a. Assa Abloy, Besam SW200i.
   3. Substitutions: Not permitted.

2.14 OVERHEAD STOPS AND HOLDERS

A. Manufacturers:
   1. Rixson or Sargent; an Assa Abloy Group company: www.assaabloydss.com/#sle.
   2. Glynn-Johnson, an Allegion brand: www.allegion.com/us/#sle.
   3. Hager Companies: www.hagerco.com.
   4. Models:
      a. Heavy duty surface:
         1) Rixson, 9.
         2) Sargent, 590.
         3) Glynn-Johnson, 90.
         4) Hager 70 Series SRF
      b. Heavy duty concealed:

1) Rixson, 1.
2) Sargent, 690.
3) Glynn-Johnson, 100.
4) Hager 70 Series CON

5. Substitutions: Not permitted.

B. Overhead Stops and Holders (Door Checks): Comply with BHMA A156.8, Grade 1.
1. Provide stop for every swinging door, unless otherwise indicated.
2. Stop is not required if positive stop feature is specified for door closer; positive stop feature of door closer is not an acceptable substitute for a stop, unless otherwise indicated.

2.15 KICK PLATES

A. Manufacturers:
1. Trimco: www.trimcohardware.com.
2. McKinney or Rockwood an Assa Abloy Company: www.assaabloydss.com
3. Hager Companies: www.hagerco.com
4. Models:
a. McKinney, KP50.
b. Rockwood, K1050.
c. Hager 194S
d. Trimco, K0050.
5. Substitutions: Not permitted.

B. Kick Plates: Provide along bottom edge of push side of every door with closer, except aluminum storefront and glass entry doors, unless otherwise indicated.
1. Thickness: 0.050 inch minimum.
2. Height: 10 inches unless otherwise indicated.
3. Width:
a. Single doors: 1-1/2 inch less than door width on frame stop face and 1 inch less than door width on opposite face.
b. Double doors: 1 inch less than door width on both faces of each door.
4. Bevel all four edges and countersink holes for fasteners.
5. Provide UL listed kickplates where required on fire-rated doors.

2.16 ELECTROMAGNETIC DOOR HOLDERS

A. Manufacturers:
1. Rixson; an Assa Abloy Group company: www.assaabloydss.com.
2. Hager Companies: www.hagerco.com.
3. Models:
a. Wall mount doors with lever:
1) Rixson, 998.
2) Hager, 380F
b. Wall mount double door egress openings:
1) Rixson, 990.
2) Hager, 380S
c. Floor mount:
1) Rixson, 980.
2) Hager, 380G
4. Substitutions: See Section 016000 - Product Requirements.

B. Electromagnetic Door Holders: Comply with BHMA A156.15.
1. Type: Wall mounted, single unit, standard duty, with strike plate attached to door.
2. Holding Force, Standard Duty: 40 lbs-force, minimum.
3. Voltage: 12 VDC, and provide power supplies by same manufacturer as holders.

4. Fail safe; door released to close automatically when electrical current is interrupted.
5. Provide interface with fire detectors and fire-alarm system for fire-rated door assemblies.

2.17 WALL STOPS

A. Manufacturers:
1. Rockwood or McKinney; an Assa Abloy Group company: www.assaabloydss.com.
2. Hager Companies: www.hagerco.com.
3. Trimco: www.trimcohardware.com.
4. Ives, an Allegion brand: www.allegion.com/us.
5. Models:
a. Wall Stop:
1) McKinney, WS04.
2) Rockwood, 403.
3) Hager, 232W
4) Trimco, 1276CCS.
5) Ives, WS402CCV.
6. Substitutions: See Section 016000 - Product Requirements.

B. Wall Stops: Comply with BHMA A156.16, Grade 1 and Resilient Material Retention Test as described in this standard.
1. Provide wall stops to prevent damage to wall surface upon opening door.
2. Type: Bumper, concave, wall stop.
3. Material: Stainless steel housing with rubber insert.

2.18 ASTRAGALS

A. Manufacturers:
1. Pemko; an Assa Abloy Group company: www.assaabloydss.com.
2. Hager Companies: www.hagerco.com.
3. National Guard Products, Inc: www.ngpinc.com.
4. Substitutions: See Section 016000 - Product Requirements.

B. Astragals: Comply with BHMA A156.22.
1. Type: Split, two parts, and with sealing gasket.
2. Material: Stainless steel.
3. Provide non-corroding fasteners at exterior locations.

2.19 THRESHOLDS

A. Manufacturers:
1. Pemko or McKinney; an Assa Abloy Group company: www.assaabloydss.com.
2. National Guard Products, Inc: www.ngpinc.com.
3. Models:
4. Substitutions: See Section 016000 - Product Requirements.

B. Thresholds: Comply with BHMA A156.21.
1. Provide threshold at each exterior door, unless otherwise indicated.
2. Type: Flat surface.
3. Material: Aluminum.
4. Threshold Surface: Fluted horizontal grooves across full width.
5. Field cut threshold to profile of frame and width of door sill for tight fit.
6. Provide non-corroding fasteners at exterior locations.

2.20 WEATHERSTRIPPING AND GASKETING

A. Manufacturers:
1. Pemko or McKinney; an Assa Abloy Group company: www.assaabloydss.com.
2. Hager Companies: www.hagerco.com/#sle.
3. National Guard Products, Inc: www.ngpinc.com/#sle.

4. Gasketing: Weather type
    a. Models:
        1) Door bottom sweeps:
            (a) McKinney, MCK358CN.
            (b) National Guard, 202NA.
            (c) Pemko, 368CN.
        2) Frame gasket:
            (a) Hager, 891SV-DBA
            (b) McKinney, MCK2891APK.
            (c) National Guard, 700 NA.
            (d) Pemko, 2891APK.
5. Substitutions: See Section 016000 - Product Requirements.

B. Weatherstripping and Gasketing: Comply with BHMA A156.22.
1. Head and Jamb Type: Adjustable.
2. Door Sweep Type: Encased in retainer.
3. Material: Aluminum, with brush weatherstripping.
4. Provide frame-applied intumescent gasketing on wood doors that are labeled as smoke and draft control doors (Indicated as "S" on Drawings), unless otherwise indicated.
5. See Section 08 1416 when wood door to frame sealing system is applied by door manufacturer.
6. Provide weatherstripping on each exterior door at head, jambs, and meeting stiles of door pairs, unless otherwise indicated.
7. Provide door bottom sweep on each exterior door, unless otherwise indicated.
8. Provide sound-rated gasketing and automatic door bottom on doors indicated as "Sound-Rated", "Acoustical", or with "Sound Transmission Class (STC) rating"; fabricate as continuous gasketing, do not cut or notch gasketing material.

2.21 SILENCERS

A. Manufacturers:
1. Ives, an Allegion brand: www.allegion.com/us.
2. Rockwood; an Assa Abloy Group company: www.assaabloydss.com.
3. Substitutions: See Section 016000 - Product Requirements.

B. Silencers: Provide at equal locations on door frame to mute sound of door's impact upon closing.
1. Single Door: Provide three on strike jamb of frame.
2. Pair of Doors: Provide two on head of frame, one for each door at latch side.
3. Material: Rubber, gray color.

2.22 FINISHES

A. Finishes: Provide door hardware of same finish, unless otherwise indicated.
1. Primary Finish: 626; satin chromium plated over nickel, with brass or bronze base material (former US equivalent US26D); BHMA A156.18.
2. Secondary Finish: as follows:; BHMA A156.18.
    a. For exit devices only, finish is to be US28.
    b. For continuous gear hinges, finish is to be dark bronze anodized US20 for interior doors and exterior doors with dark bronze frames or US28 for exterior doors with clear anodized aluminum frames.
3. Exceptions:
    a. Where base material metal is specified to be different, provide finish that is an equivalent appearance in accordance with BHMA A156.18.
    b. Hinges for Fire-Rated Doors: Steel base material with painted finish, in compliance with NFPA 80.

PART 3 EXECUTION

3.01 EXAMINATION

A. Verify that doors and frames are ready to receive this work; labeled, fire-rated doors and frames are properly installed, and dimensions are as indicated on shop drawings.

3.02 INSTALLATION

A. Install hardware in accordance with manufacturer's instructions and applicable codes.

B. Install hardware on fire-rated doors and frames in accordance with applicable codes and NFPA 80.

C. Use templates provided by hardware item manufacturer.

D. Do not install surface mounted items until application of finishes to substrate are fully completed.

E. Door Hardware Mounting Heights: Distance from finished floor to center line of hardware item. unless otherwise noted in the Schedule:.
   1. For Wood Doors: Install in compliance with DHI WDHS.3 recommendations.
   2. For FRP doors: Comply with DHI "Recommended Locations for Architectural Hardware for Steel Doors and Frames" or as recommended by the manufacturer.

F. Set exterior door thresholds with full-width bead of elastomeric sealant at each point of contact with floor providing a continuous weather seal; anchor thresholds with stainless steel countersunk screws.

3.03 FIELD QUALITY CONTROL

A. Perform field inspection and testing under provisions of Section 014000 - Quality Requirements.

B. Inspection and Testing
   1. Provide functional testing and inspection of fire door assemblies by a qualified person in accordance with NFPA 80.
   2. Schedule fire door assembly inspection within 90 days of Substantial Completion of the Project.
   3. Submit a signed, written final report as specified in Paragraph 1.07.A.
   4. Correct all deficiencies and schedule a reinspection of fire door assemblies noted as deficient on the inspection report.

C. Provide an Architectural Hardware Consultant (AHC) to inspect installation and certify that hardware and installation has been furnished and installed in accordance with manufacturer's instructions and as specified.

3.04 ADJUSTING

A. Adjust work under provisions of Section 017000 - Execution and Closeout Requirements.

B. Adjust hardware for smooth operation.

C. Adjust gasketing for complete, continuous seal; replace if unable to make complete seal.

3.05 CLEANING

A. Clean finished hardware in accordance with manufacturer's written instructions after final adjustments have been made.

B. Clean adjacent surfaces soiled by hardware installation.

C. Replace items that cannot be cleaned to manufacturer's level of finish quality at no additional cost.

D. See Section 017419 - Construction Waste Management and Disposal for additional requirements.

3.06 PROTECTION

A. Protect finished Work under provisions of Section 017000 - Execution and Closeout Requirements.

B. Do not permit adjacent work to damage hardware or finish.

END OF SECTION 087100

SECTION 088300
MIRRORS

PART 1 GENERAL

1.01 SECTION INCLUDES

A. Glass mirrors.
   1. Tempered safety glass.

1.02 RELATED REQUIREMENTS

A. Section 062000 - Finish Carpentry: Wood mirror frames.

B. Section 102800 - Toilet, Bath, and Laundry Accessories: Metal mirror frames.

1.03 REFERENCE STANDARDS

A. ASTM C1048 - Standard Specification for Heat-Strengthened and Fully Tempered Flat Glass.

B. GANA (GM) - GANA Glazing Manual.

C. GANA (SM) - GANA Sealant Manual.

1.04 SUBMITTALS

A. See Section 013000 - Administrative Requirements, for submittal procedures.

B. Product Data on Mirror Types: Submit structural, physical and environmental characteristics, size limitations, special handling and installation requirements.

C. Product Data on Glazing Compounds: Provide chemical, functional, and environmental characteristics, limitations, special application requirements. Identify available custom colors.

D. Manufacturer's Certificate: Certify that mirrors, meets or exceeds specified requirements.

E. Warranty: Submit manufacturer warranty and ensure that forms have been completed in Owner's name and registered with manufacturer.

1.05 QUALITY ASSURANCE

A. Perform Work in accordance with GANA Glazing Manual and GANA (SM) for glazing installation methods.

B. Fabricate, store, transport, receive, install, and clean mirrors in accordance with manufacturer's recommendations.

1.06 FIELD CONDITIONS

A. Do not install mirrors when ambient temperature is less than 50 degrees F.

B. Maintain minimum ambient temperature before, during and 24 hours after installation of glazing compounds.

1.07 WARRANTY

A. See Section 017800 - Closeout Submittals, for additional warranty requirements.

B. Provide ten year manufacturer warranty for reflective coating on mirrors and replacement of same.

PART 2 PRODUCTS

2.01 MANUFACTURERS

A. Mirrors:
   1. Lenoir Mirror Co; Lenoir Mirror: www.lenoirmirror.com.
   2. Trulite Glass and Aluminum Solutions; Trulite Mirror: www.trulite.com.
   3. Guradian Industries; UltraMirror; www.guardianglass.com
   4. Substitutions: See Section 016000 - Product Requirements.

2.02 MATERIALS

A. Mirror Design Criteria: Select materials and/or provide supports as required to limit mirror material deflection to 1/200, or to the flexure limit of glass, with full recovery of glazing materials, whichever is less.

B. Mirror Glass: Clear, tempered safety glass; ASTM C1048, with copper and silver coatings, and protective overcoating.
   1. Thickness: 1/4 inch.
   2. Size: As indicated on drawings.

2.03 ACCESSORIES

A. Glazing Clips: Manufacturer's standard type.

B. Mirror Attachment Accessories: Stainless steel J-profile channels at top and bottom of mirror. Fabricate top channel to allow the mirror to be lifted up and removed from the wall channels.

C. Mirror Adhesive: Chemically compatible with mirror coating and wall substrate. Adhesive must be secondary and additional to mechanical wall fasteners.

PART 3 EXECUTION

3.01 EXAMINATION

A. Verify that openings for mirrored glazing are correctly sized and within tolerance.

B. Verify that surfaces of mirror frames or recesses are clean, free of obstructions, and ready for installation of mirrors.

3.02 PREPARATION

A. Clean contact surfaces with solvent and wipe dry.

B. Seal porous mirror frames or recesses with substrate compatible primer or sealer. Prime surfaces scheduled to receive sealant.

C. Prepare installation in accordance with ASTM C1193 for solvent release sealants, and install sealant in accordance with manufacturer's instructions.

3.03 INSTALLATION

A. Install mirrors in accordance with manufacturer's recommendations.

B. Set mirrors plumb and level, and free of optical distortion.

C. Set mirrors with edge clearance free of surrounding construction including countertops or backsplashes.

D. Mirrors must be anchored mechanically to wall.

3.04 CLEANING

A. Remove wet glazing materials from finish surfaces.

B. Remove labels, wrapping, etc after work is complete.

C. Clean mirrors and adjacent surfaces.

END OF SECTION 088300

SECTION 089100
LOUVERS

PART 1 GENERAL

1.01 SECTION INCLUDES

A. Louvers, frames, and accessories.

1.02 RELATED REQUIREMENTS

A. Section 233100 - HVAC Ducts and Casings: Ductwork attachment to louvers.

1.03 REFERENCE STANDARDS

A. AMCA 500-L - Laboratory Methods of Testing Louvers for Rating.

B. AMCA 511 - Certified Ratings Program Product Rating Manual for Air Control Devices.

1.04 SUBMITTALS

A. See Section 013000 - Administrative Requirements for submittal procedures.

B. Shop Drawings: Indicate louver layout plan and elevations, opening and clearance dimensions, and tolerances; head, jamb and sill details; blade configuration, screens, blank-off areas required, and frames.

C. Test Reports: Independent agency reports showing compliance with specified performance criteria.

D. Manufacturer's Certificate: Certify that products meet or exceed specified requirements.

1.05 QUALITY ASSURANCE

A. Manufacturer Qualifications: Company specializing in manufacturing products of the type specified in this section, with minimum three years of documented experience.

B. Installer Qualifications: Company specializing in performing work of type specified and with at least three years of documented experience.

1.06 WARRANTY

A. See Section 017800 - Closeout Submittals for additional warranty requirements.

B. Provide five year manufacturer's warranty against distortion, metal degradation, and connection failures of louver components.
   1. Finish: Include twenty year coverage against degradation of exterior finish.

PART 2 PRODUCTS

2.01 MANUFACTURERS

A. Louvers:
   1. Airolite Company, LLC: www.airolite.com.
   2. Construction Specialties, Inc: www.c-sgroup.com.
   3. Pottorff: www.pottorff.com.

2.02 LOUVERS

A. Louvers: Factory fabricated and assembled, complete with frame, mullions, and accessories; AMCA Certified in accordance with AMCA 511.
   1. Wind Load Resistance: Design to resist positive and negative wind load of 25 psf without damage or permanent deformation.
   2. Intake Louvers: Design to allow maximum of 0.01 oz/sq ft water penetration at calculated intake design velocity based on design air flow and actual free area, when tested in accordance with AMCA 500-L.
   3. Drainable Blades: Continuous rain stop at front or rear of blade aligned with vertical gutter recessed into both jambs of frame.
   4. Screens: Provide insect screens at intake louvers and bird screens at exhaust louvers.

2.03 MATERIALS

2.04 FINISHES

A. Color: as selected by the architect from manufacturer's full range of colors.

2.05 ACCESSORIES

A. Screens: Frame of same material as louver, with reinforced corners; removable, screw attached; installed on inside face of louver frame.

B. Insect Screen: 18 x 16 size aluminum mesh.

C. Fasteners and Anchors: Stainless steel.

D. Sealant for Setting Sills and Sill Flashing: Non-curing butyl type.

PART 3 EXECUTION

3.01 EXAMINATION

A. Verify that prepared openings and flashings are ready to receive this work and opening dimensions are as indicated on shop drawings.

B. Verify that field measurements are as indicated.

3.02 INSTALLATION

A. Install louver assembly in accordance with manufacturer's instructions.

B. Install louvers level and plumb.

C. Set sill members and sill flashing in continuous bead of sealant.

D. Align louver assembly to ensure moisture shed from flashings and diversion of moisture to exterior.

E. Secure louver frames in openings with concealed fasteners.

F. Coordinate with installation of mechanical ductwork.

3.03 CLEANING

A. Strip protective finish coverings.

B. Clean surfaces and components.

END OF SECTION 089100

SECTION 090561
COMMON WORK RESULTS FOR FLOORING PREPARATION

PART 1 GENERAL

1.01 SECTION INCLUDES

A. This section applies to floors identified in Contract Documents that are receiving the following types of floor coverings:
   1. Resilient tile and sheet.

B. Removal of existing floor coverings.

C. Preparation of existing concrete floor slabs for installation of floor coverings.

D. Patching compound.

E. Remedial floor coatings.

F. Remedial floor treatment.

1.02 RELATED REQUIREMENTS

A. Section 014000 - Quality Requirements: Additional requirements relating to testing agencies and testing.

B. Section 017419 - Construction Waste Management and Disposal: Handling of existing floor coverings removed.

1.03 REFERENCE STANDARDS

A. ASTM C109/C109M - Standard Test Method for Compressive Strength of Hydraulic Cement Mortars (Using 50 mm [2 in.] Cube Specimens).

B. ASTM C472 - Standard Test Methods for Physical Testing of Gypsum, Gypsum Plasters, and Gypsum Concrete.

C. RFCI (RWP) - Recommended Work Practices for Removal of Resilient Floor Coverings.

1.04 SUBMITTALS

A. Floor Covering and Adhesive Manufacturers' Product Literature: For each specific combination of substrate, floor covering, and adhesive to be used; showing:
   1. Moisture and alkalinity (pH) limits and test methods.
   2. Manufacturer's required bond/compatibility test procedure.

B. Adhesive Bond and Compatibility Test Report.

C. Test Reports: For floor leveling, patching compound and remediation materials, provide independent laboratory reports and test results showing negative asbestos containing materials content using Polarized Light Microscopy (PLM) test method.

D. Remedial Materials Product Data: Manufacturer's published data on each product to be used for remediation.
   1. Test reports indicating compliance with specified performance requirements, performed by nationally recognized independent testing agency.
   2. Specimen Warranty: Copy of warranty to be issued by coating manufacturer and certificate of underwriter's coverage of warranty.

1.05 QUALITY ASSURANCE

A. Contractor may perform adhesive and bond test with Contractor's own personnel or hire a testing agency.

B. Remedial Coating Installer Qualifications: Company specializing in performing work of the type specified in this section, trained by or employed by coating manufacturer, and able to provide at least 3 project references showing at least 3 years' experience installing moisture emission coatings.

1.06 DELIVERY, STORAGE, AND HANDLING

A. Deliver, store, handle, and protect products in accordance with manufacturer's instructions and recommendations.

B. Deliver materials in manufacturer's packaging; include installation instructions.

C. Keep materials from freezing.

PART 2 PRODUCTS

2.01 MATERIALS

A. Patching Compound: Floor covering manufacturer's recommended product, suitable for conditions, and compatible with adhesive and floor covering. In the absence of any recommendation from flooring manufacturer, provide a product with the following characteristics:
   1. Cementitious moisture-, mildew-, and alkali-resistant compound, compatible with floor, floor covering, and floor covering adhesive, and capable of being feathered to nothing at edges.
   2. Latex or polyvinyl acetate additions are permitted; gypsum content is prohibited.
   3. Compressive Strength: 3000 psi, minimum, after 28 days, when tested in accordance with ASTM C109/C109M or ASTM C472, whichever is appropriate.
   4. Products:
      a. USG Corporation; Durock Brand Advanced Skim Coat Floor Patch: www.usg.com/#sle.
      b. Substitutions: See Section 016000 - Product Requirements.

B. Remedial Flooring Adhesive: Floor covering manufacturer's recommended product, suitable for the moisture and pH conditions present; low-VOC. In the absence of any recommendation from flooring manufacturer, provide a product recommended by adhesive manufacturer as suitable for substrate and floor covering and for conditions present.

C. Remedial Floor Coating: Single- or multi-layer coating or coating/overlay combination intended by its manufacturer to resist water vapor transmission to degree sufficient to meet flooring manufacturer's emission limits, resistant to the level of alkalinity (pH) found, and suitable for adhesion of flooring without further treatment.
   1. Thickness: As required for application and in accordance with manufacturer's installation instructions.
   2. Products:
      a. ARDEX Engineered Cements; ARDEX MC RAPID: www.ardexamericas.com/#sle.
      b. Floor Seal Technology, Inc; MES 100 with Floor Seal FloorCem SLU: www.floorseal.com/#sle.
      c. Sika Corporation; Sikafloor Moisture Tolerance Epoxy Primer and Sikafloor Self-Leveling Moisture Tolerant Resurfacer: www.sikafloorusa.com/#sle.
      d. UZIN, a division of UFLOOR Systems Inc; Uzin NC-890 Hydro Patch: www.ufloorsystems.com/#sle.
      e. Substitutions: See Section 016000 - Product Requirements.

D. Remedial Floor Treatment: Penetrating, spray-applied, silicate-based product intended by its manufacturer to resist water vapor transmission to degree sufficient to meet flooring manufacturer's emission limits, resistant to the level of alkalinity (pH) found, and suitable for adhesion of flooring without further treatment.

PART 3 EXECUTION

3.01 CONCRETE SLAB PREPARATION

A. Perform following operations in the order indicated:
   1. Existing concrete slabs (on-grade and elevated) with existing floor coverings:

a. Visual observation of existing floor covering, for adhesion, water damage, alkaline deposits, and other defects.
b. Removal of existing floor covering.

2. Preliminary cleaning.
3. Specified remediation, if required.
4. Patching, smoothing, and leveling, as required.
5. Other preparation specified.
6. Adhesive bond and compatibility test.
7. Protection.

B. Remediations:

1. Active Water Leaks or Continuing Moisture Migration to Surface of Slab: Correct this condition before doing any other remediation; re-test after correction.
2. Excessive Moisture Emission or Relative Humidity: If an adhesive that is resistant to the level of moisture present is available and acceptable to flooring manufacturer, use that adhesive for installation of the flooring; if not, apply remedial floor coating or remedial sheet membrane over entire suspect floor area.
3. Excessive Alkalinity (pH): If remedial floor coating is necessary to address excessive moisture, no additional remediation is required; if not, if an adhesive that is resistant to the level present is available and acceptable to the flooring manufacturer, use that adhesive for installation of the flooring; otherwise, apply a skim coat of specified patching compound over entire suspect floor area.

3.02 REMOVAL OF EXISTING FLOOR COVERINGS

A. Comply with local, State, and federal regulations and recommendations of RFCI (RWP), as applicable to floor covering being removed.

B. Dispose of removed materials in accordance with local, State, and federal regulations and as specified.

3.03 PREPARATION

A. See individual floor covering section(s) for additional requirements.

B. Comply with requirements and recommendations of floor covering manufacturer.

C. Remove sub-floor ridges and bumps.

D. Fill and smooth surface cracks, grooves, depressions, control joints and other non-moving joints, and other irregularities with patching compound.

1. Apply, trowel, and float filler to achieve smooth, flat, hard surface.

E. Do not fill expansion joints, isolation joints, or other moving joints.

F. Prohibit traffic until filler is cured.

3.04 ADHESIVE BOND AND COMPATIBILITY TESTING

A. Comply with requirements and recommendations of floor covering manufacturer.

3.05 APPLICATION OF REMEDIAL FLOOR COATING

A. Comply with requirements and recommendations of coating manufacturer.

3.06 APPLICATION OF REMEDIAL FLOOR TREATMENT

A. Comply with requirements and recommendations of treatment manufacturer.

END OF SECTION 090561

SECTION 092116
GYPSUM BOARD ASSEMBLIES

PART 1 GENERAL

1.01 SECTION INCLUDES

A. Performance criteria for gypsum board assemblies.

B. Metal stud wall framing.

C. Gypsum wallboard

D. Joint treatment and accessories.

1.02 RELATED REQUIREMENTS

A. Section 061000 - Rough Carpentry: Wood blocking product and execution requirements.

1.03 REFERENCE STANDARDS

A. AISI S220 - North American Standard for Cold-Formed Steel Nonstructural Framing.

B. AISI S240 - North American Standard for Cold-Formed Steel Structural Framing.

C. ANSI A108.11 - American National Standard Specifications for Interior Installation of Cementitious Backer Units.

D. ANSI A118.9 - American National Standard Specifications for Test Methods and Specifications for Cementitious Backer Units.

E. ASTM A1003/A1003M - Standard Specification for Steel Sheet, Carbon, Metallic- and Nonmetallic-Coated for Cold-Formed Framing Members.

F. ASTM C665 - Standard Specification for Mineral-Fiber Blanket Thermal Insulation for Light Frame Construction and Manufactured Housing.

G. ASTM C754 - Standard Specification for Installation of Steel Framing Members to Receive Screw-Attached Gypsum Panel Products.

H. ASTM C840 - Standard Specification for Application and Finishing of Gypsum Board.

I. ASTM C1047 - Standard Specification for Accessories for Gypsum Wallboard and Gypsum Veneer Base.

J. ASTM C1325 - Standard Specification for Fiber-Mat Reinforced Cementitious Backer Units.

K. ASTM C1396/C1396M - Standard Specification for Gypsum Board.

L. ASTM C1629/C1629M - Standard Classification for Abuse-Resistant Nondecorated Interior Gypsum Panel Products and Fiber-Reinforced Cement Panels.

M. ASTM C1658/C1658M - Standard Specification for Glass Mat Gypsum Panels.

N. ASTM D3273 - Standard Test Method for Resistance to Growth of Mold on the Surface of Interior Coatings in an Environmental Chamber.

O. GA-216 - Application and Finishing of Gypsum Panel Products.

1.04 SUBMITTALS

A. See Section 013000 - Administrative Requirements for submittal procedures.

B. Product Data:
   1. Provide data on metal framing, gypsum board, accessories, and joint finishing system.

C. Test Reports: For plaster, gypsum board panels and drywall compound, provide independent laboratory reports and test results showing negative asbestos containing materials content using Polarized Light Microscopy (PLM) test method.

1.05 QUALITY ASSURANCE

A. Installer Qualifications: Company specializing in performing gypsum board installation and finishing, with minimum five years of experience.

PART 2 PRODUCTS

2.01 GYPSUM BOARD ASSEMBLIES

A. Provide completed assemblies complying with ASTM C840 and GA-216.
   1. See PART 3 for finishing requirements.

B. Fire Rated Assemblies: Provide completed assemblies complying with applicable code.

2.02 METAL FRAMING MATERIALS

A. Steel Sheet: ASTM A1003/A1003M, subject to the ductility limitations indicated in AISI S240.

B. Manufacturers - Metal Framing, Connectors, and Accessories:
   1. Clarkwestern Dietrich Building Systems LLC: www.clarkdietrich.com.
   2. Custom Stud Inc: www.customstud.com
   3. Marino: www.marinoware.com/#sle.
   4. Telling Industries, www.buildstrong.com.
   5. Substitutions: See Section 016000 - Product Requirements.

C. Nonstructural Framing System Components: AISI S220; galvanized sheet steel, of size and properties necessary to comply with ASTM C754 for the spacing indicated, with maximum deflection of wall framing of L/120 at 5 psf.
   1. Studs: C-shaped with knurled or embossed faces.
   2. Runners: U shaped, sized to match studs.

D. Partition Head To Structure Connections: Provide track fastened to structure with legs of sufficient length to accommodate deflection, for friction fit of studs cut short and fastened as indicated on drawings.

E. Nail Guard:
   1. Provide nail guard as required by local authority having jurisdiction.
   2. Provide nail guard on face of studs where piping and conduit are routed through the partition within 1-1/4" of the face of the studs.

2.03 BOARD MATERIALS

A. Manufacturers - Gypsum-Based Board:
   1. American Gypsum Company: www.americangypsum.com/#sle.
   2. CertainTeed Corporation: www.certainteed.com/#sle.
   3. Georgia-Pacific Gypsum: www.gpgypsum.com/#sle.
   4. National Gypsum Company: www.nationalgypsum.com/#sle.
   5. PABCO Gypsum: www.pabcogypsum.com/#sle.
   6. USG Corporation: www.usg.com/#sle.
   7. Substitutions: See Section 016000 - Product Requirements.

B. Gypsum Wallboard: Paper-faced gypsum panels as defined in ASTM C1396/C1396M; sizes to minimize joints in place; ends square cut.
   1. Application: Use for vertical surfaces and ceilings, unless otherwise indicated.
   2. Glass mat faced gypsum panels, as defined in ASTM C1658/C1658M, suitable for paint finish, of the same core type and thickness may be substituted for paper-faced board.
   3. Mold Resistance: Score of 10, when tested in accordance with ASTM D3273.
      a. Mold-resistant board is required whenever board is being installed before the building is enclosed and conditioned.
      b. Mold resistant board is required where board is being installed in areas with potential exposure to moisture.
   4. Thickness:
      a. Vertical Surfaces: 5/8 inch.
   5. Paper-Faced Products:
      a. American Gypsum Company; LightRoc Gypsum Wallboard: www.americangypsum.com/#sle.

b. Georgia-Pacific Gypsum; ToughRock: www.gpgypsum.com/#sle.
c. Substitutions: See Section 016000 - Product Requirements.

6. Mold-Resistant, Paper-Faced Products:
   a. American Gypsum Company; M-Bloc: www.americangypsum.com/#sle.
   b. American Gypsum Company; M-Bloc Type X: www.americangypsum.com/#sle.
   c. American Gypsum Company; M-Bloc Type C: www.americangypsum.com/#sle.
   d. Georgia-Pacific Gypsum; ToughRock Mold-Guard: www.gpgypsum.com/#sle.
   e. Georgia-Pacific Gypsum; ToughRock Fireguard X Mold-Guard: www.gpgypsum.com/#sle.
   f. National Gypsum Company; Gold Bond XP Gypsum Board: www.nationalgypsum.com/#sle.
   g. Substitutions: See Section 016000 - Product Requirements.
7. Glass Mat Faced Products Regular and Type X:
   a. Georgia-Pacific Gypsum; DensArmor Plus: www.gpgypsum.com/#sle.
   b. Georgia-Pacific Gypsum; DensArmor Plus Fireguard C: www.gpgypsum.com/#sle.
   c. National Gypsum Company; Gold Bond eXP Fire-Shield Interior Extreme Gypsum Panel: www.nationalgypsum.com/#sle.
   d. USG Corporation; USG Sheetrock Brand Glass-Mat Panels Mold Tough.
   e. Substitutions: See Section 016000 - Product Requirements.

C. Impact Resistant Wallboard:
1. Application: High-traffic areas indicated.
2. Surface Abrasion: Level 3, minimum, when tested in accordance with ASTM C1629/C1629M.
3. Indentation: Level 1, minimum, when tested in accordance with ASTM C1629/C1629M.
4. Soft Body Impact: Level 2, minimum, when tested in accordance with ASTM C1629/C1629M.
5. Hard Body Impact: Level 2, minimum, when tested in accordance with ASTM C1629/C1629M.
6. Mold Resistance: Score of 10, when tested in accordance with ASTM D3273.
7. Type: Fire-resistance-rated Type X, UL or WH listed.
8. Thickness: 5/8 inch.
9. Edges: Tapered.

D. Backing Board For Wet Areas: One of the following products:
1. Application: Surfaces behind tile in wet areas including tub and shower surrounds and shower ceilings.
2. Mold Resistance: Score of 10, when tested in accordance with ASTM D3273.
3. ANSI Cement-Based Board: Non-gypsum-based; aggregated Portland cement panels with glass fiber mesh embedded in front and back surfaces complying with ANSI A118.9 or ASTM C1325.
   a. Thickness: 1/2 inch.
   b. Products:
      1) Custom Building Products; WonderBoard: www.custombuildingproducts.com.
      2) National Gypsum Company; PermaBase Cement Board: www.nationalgypsum.com/#sle.
      3) USG Corporation; Durock Cement Board: www.usg.com.
      4) James Hardie Building Products, Inc; HardieBacker Fiber Cement Backer Board; www.jameshardie.com.
      5) Substitutions: See Section 016000 - Product Requirements.

E. Backing Board For Non-Wet Areas: Water-resistant gypsum backing board as defined in ASTM C1396/C1396M; sizes to minimum joints in place; ends square cut.
1. Application: Vertical surfaces behind thinset tile, except in wet areas.
2. Mold Resistance: Score of 10, when tested in accordance with ASTM D3273.

3. Edges: Tapered.
4. Products:
    a. American Gypsum Company; M-Bloc: www.americangypsum.com/#sle.
    b. American Gypsum Company; M-Bloc Type X: www.americangypsum.com/#sle.
    c. Georgia-Pacific Gypsum; ToughRock Mold-Guard Gypsum Board: www.gpgypsum.com/#sle.
    d. Georgia-Pacific Gypsum; DensArmor Plus: www.gpgypsum.com/#sle.
    e. National Gypsum Company; Gold Bond XP Gypsum Board: www.nationalgypsum.com/#sle.

F. Ceiling Board: Special sag resistant gypsum ceiling board as defined in ASTM C1396/C1396M; sizes to minimize joints in place; ends square cut.
1. Application: Ceilings, unless otherwise indicated.
2. Thickness: 1/2 inch.
3. Edges: Tapered.
4. Products:
    a. American Gypsum; Interior Ceiling Board.
    b. CertainTeed Corporation; ProRoc Interior Ceiling.
    c. Georgia-Pacific Gypsum; ToughRock Span 24 Ceiling Board: www.gpgypsum.com/#sle.
    d. USG Corporation; Sheetrock Brand Sag-Resistant Interior Gypsum Ceiling Board.

2.04 GYPSUM BOARD ACCESSORIES

A. Acoustic Insulation: ASTM C665; preformed mineral-fiber, friction fit type, unfaced; thickness as required for STC.

B. Acoustic Sealant: Acrylic emulsion latex or water-based elastomeric sealant; do not use solvent-based non-curing butyl sealant.

C. Beads, Joint Accessories, and Other Trim: ASTM C1047, rigid plastic, galvanized steel, or rolled zinc, unless noted otherwise.
1. Expansion Joints:
    a. Type: V-shaped PVC with tear away fins.
    b. Type: V-shaped metal with factory-installed protective tape.

D. High Build Drywall Surfacer: Vinyl acrylic latex-based coating for spray application, designed to take the place of skim coating and separate paint primer in achieving Level 5 finish.

PART 3 EXECUTION

3.01 EXAMINATION

A. Verify that project conditions are appropriate for work of this section to commence.

3.02 FRAMING INSTALLATION

A. Metal Framing: Install in accordance with AISI S220 and manufacturer's instructions.

B. Studs: Space studs at 16 inches on center.
1. Extend partition framing to structure where indicated and to ceiling in other locations.
2. Partitions Terminating at Ceiling: Attach ceiling runner securely to ceiling track in accordance with manufacturer's instructions.
3. Partitions Terminating at Structure: Attach extended leg top runner to structure, maintain clearance between top of studs and structure, and brace both flanges of studs with continuous bridging.

C. Openings: Reinforce openings as required for weight of doors or operable panels, using not less than double studs at jambs.

D. Standard Wall Furring: Install at concrete walls scheduled to receive gypsum board, not more than 4 inches from floor and ceiling lines and abutting walls. Secure in place on alternate channel flanges at maximum 24 inches on center.

1. Orientation: Horizontal.
2. Spacing: At 16 inches on center.

E. Blocking: Install wood blocking for support of:
1. Framed openings.
2. Wall-mounted cabinets.
3. Plumbing fixtures.
4. Toilet partitions.
5. Toilet accessories.
6. Wall-mounted door hardware.

3.03 ACOUSTIC ACCESSORIES INSTALLATION

A. Acoustic Insulation: Place tightly within spaces, around cut openings, behind and around electrical and mechanical items within partitions, and tight to items passing through partitions.

B. Acoustic Sealant: Install in accordance with manufacturer's instructions.
1. Place one bead continuously on substrate before installation of perimeter framing members.
2. Place continuous bead at perimeter of each layer of gypsum board.
3. Seal around all penetrations by conduit, pipe, ducts, and rough-in boxes, except where firestopping is provided.

3.04 BOARD INSTALLATION

A. Comply with ASTM C840, GA-216, and manufacturer's instructions. Install to minimize butt end joints, especially in highly visible locations.

B. Single-Layer Nonrated: Install gypsum board in most economical direction, with ends and edges occurring over firm bearing.

C. Double-Layer, Nonrated: Use gypsum board for first layer, placed parallel to framing or furring members, with ends and edges occurring over firm bearing. Use glass mat faced gypsum board at exterior walls and at other locations as indicated. Place second layer perpendicular to framing or furring members. Offset joints of second layer from joints of first layer.

D. Fire-Resistance-Rated Construction: Install gypsum board in strict compliance with requirements of assembly listing.

E. Cementitious Backing Board: Install over steel framing members and plywood substrate where indicated, in accordance with ANSI A108.11 and manufacturer's instructions.

F. Installation on Metal Framing: Use screws for attachment of gypsum board except face layer of nonrated double-layer assemblies, which may be installed by means of adhesive lamination.

3.05 INSTALLATION OF TRIM AND ACCESSORIES

A. Control Joints: Place control joints consistent with lines of building spaces and as indicated.
1. Not more than 30 feet apart on walls and ceilings over 50 feet long.

B. Corner Beads: Install at external corners, using longest practical lengths.

C. Edge Trim: Install at locations where gypsum board abuts dissimilar materials.

3.06 JOINT TREATMENT

A. Paper Faced Gypsum Board: Use paper joint tape, bedded with ready-mixed vinyl-based joint compound and finished with ready-mixed vinyl-based joint compound.

B. Finish gypsum board in accordance with levels defined in ASTM C840, as follows:
1. Level 5: Walls and ceilings to receive semi-gloss or gloss paint finish and other areas specifically indicated. Walls receiving marker board paint system including new and existing walls.
2. Level 4: Walls and ceilings to receive paint finish or wall coverings, unless otherwise indicated.
3. Level 3: Walls to receive textured wall finish.

4. Level 2: In utility areas, behind cabinetry, and on backing board to receive tile finish.
5. Level 1: Fire rated wall areas above finished ceilings, whether or not accessible in the completed construction.
6. Level 0: Temporary partitions.

C. Tape, fill, and sand exposed joints, edges, and corners to produce smooth surface ready to receive finishes.
   1. Feather coats of joint compound so that camber is maximum 1/32 inch.

D. Where Level 5 finish is indicated, spray apply high build drywall surfacer over entire surface after joints have been properly treated; achieve a flat and tool mark-free finish.

E. Fill and finish joints and corners of cementitious backing board as recommended by manufacturer.

3.07 TOLERANCES

A. Maximum Variation of Finished Gypsum Board Surface from True Flatness: 1/8 inch in 10 feet in any direction.

END OF SECTION 092116

SECTION 092119
ENCLOSURE OF ASBESTOS CONTAINING MATERIALS

PART 1 GENERAL

1.01 DESCRIPTION OF WORK

A. The work of this Section includes the enclosure of minor amounts of asbestos-containing materials.

1.02 SUBMITTALS

A. Product Data: Submit manufacturer's technical information including label analysis and application instructions for each material proposed for use.

B. Installation Instructions: Submit manufacturer's installation instructions with specific project requirements noted.

C. Safety Data Sheet: Submit the Safety Data Sheet, or equivalent, in accordance with the OSHA Hazard Communication Standard (29 CFR 1910.1200) for each surfactant and encapsulating material proposed for use on the work. Include a separate attachment for each sheet indicating the specific worker protective equipment proposed for use with the material indicated.

1.03 DELIVERY AND STORAGE

A. Deliver materials to the job site in original, new and unopened packages and containers bearing manufacturer's name and label, name of the material, and include application instructions.

B. Deliver materials together with a copy of the OSHA Safety Data Sheet for the material.

1.04 JOB CONDITIONS

A. Apply encapsulating materials only when environmental conditions in the work area are as required by the manufacturer's instructions.

PART 2 PRODUCTS

2.01 GENERAL: THE CONTRACTOR SHALL DETERMINE WHICH ENCLOSURE METHOD BEST SUITS THE WORK AREA, SUBSTRATE CONDITIONS, AND LOCATION OF INACCESSIBLE MATERIAL. SUBMIT A PRODUCT(S) TO ENCLOSURE THE MATERIAL AS DESCRIBED BELOW OR SUBMIT AN ALTERNATIVE PRODUCT FOR INSTALLATION.

2.02 GYPSUM BOARD PRODUCTS, SUPPORT MATERIALS, AND TRIM ACCESSORIES

A. Gypsum Wallboard: ASTM C 36, with regular backing, tapered edges, and ½” thick, in maximum lengths available to minimize end-to-end butt joints.

B. Metal Support Materials:
   1. General: Size ceiling support components to comply with ASTM C 754 unless otherwise indicated.
   2. Hanger Wire: ASTM A 641, soft, Class 1 galvanized.
   3. Hanger Rods and Flats: Mild steel with zinc or equally rust inhibitive coating for rods and zinc or rust-inhibitive paint finish for flats.
   4. Hanger Anchorage Devices: Screws, clips, bolts, or other devices applicable to the indicated method of structural anchorage for ceiling hangers and whose suitability for use intended has been proven through standard construction practices or by certified test data. Size devices for 3 x calculated load supported except size direct pull-out concrete inserts for 5 x calculated loads.
   5. Furring Members: ASTM C 645; 0.0179" min. thickness of base metal, hat-shaped.
   6. Studs: ASTM C 645; 0.0179" min. thickness of base metal unless otherwise indicated.
   7. Runners: Match studs; type recommended by stud manufacturer for floor and ceiling support of studs, and for vertical abutment of drywall work at other work.

C. General: Provide manufacturer's standard trim accessories of types indicated for drywall work, formed of galvanized steel unless otherwise indicated, with either knurled and perforated or expanded flanges for nailing or stapling, and beaded for concealment of flanges in joint compound. Provide corner beads, L-type edge trim-beads, U-type edge trim-beads, special L-kerf-type edge trim-beads, and one-piece control joint beads.
   1. Semi-Finishing Type: manufacturer's standard trim units which are not to be finished with joint compound (non-beaded).
   2. Plastic Edge Trim: manufacturer's standard rigid or semi-rigid PVC moldings of the semi-finished type, shaped to provide resilient contact of gypsum board edges with other work; friction-fit, or pressure-sensitive adhesive mounting.

2.03 SRAY FOAM

A. Provide spray foam capable of specifically adhering to the asbestos-containing material, which satisfies fire ratings, and is compatible with the substrate to which it is being applied.

2.04 RUBBER MEMBRANE

A. Provide rubber membrane, at least 20 mil in thickness, to enclose the material. Indicate the materials with which the membrane will be attached and sealed to the substrate. The rubber membrane must be capable of expanding and contracting with the building structure to prevent ripping or tearing of the enclosure.

PART 3 EXECUTION

3.01 GENERAL

A. Do Not Commence Installation of the enclosure until all removal work within the work area has been completed and verified by the Owner that remaining material is inaccessible.

3.02 WORKER PROTECTION

A. Before beginning work with any material for which a Material Safety Data Sheet has been submitted provide workers with the required protective equipment, which may include combination HEPA/chemical cartridges. Require that appropriate protective equipment be used at all times.

3.03 GENERAL GYPSUM BOARD INSTALLATION REQUIREMENTS

A. Gypsum Board Application and Finishing Standards: ASTM C 840 and GA 216.

B. Locate exposed end-butt joints as far from center of walls and ceilings as possible, and stagger not less than 1'-0" in alternate courses of board.

C. Install ceiling boards in the direction and manner which will minimize the number of end-butt joints, and which will avoid end joints in the central area of each ceiling. Stagger end joints at least 1'-0".

D. Install wall/partition boards vertically or horizontally to avoid end-butt joints wherever possible. At stairwells and similar high walls, install boards horizontally with end joints staggered over studs.

E. Install exposed gypsum board with face side out. Do not install imperfect, damaged or damp boards. Butt boards together for a light contact at edges and ends with not more than 1/16" open space between boards. Do not force into place.

F. Locate either edge or end joints over supports, except in horizontal applications where intermediate supports or gypsum board back-blocking is provided behind end joints. Position boards so that like edges abut, tapered edges against tapered edges and mill-cut or field-cut ends against mill-cut or field- cut ends. Do not place tapered edges against cut edges or ends. Stagger vertical joints over different studs on opposite sides of partitions.

G. Attach gypsum board to supplementary framing and blocking. Provide for additional support at openings and cutouts.

H. Form control joints and expansion joints with space between edges of boards, prepared to receive trim accessories. Provide air tight seal.

I. Cover both faces of steel stud partition framing with gypsum board in concealed spaces (above ceilings, etc.), except in chase walls which are properly braced internally.
   1. Except where concealed application is required for sound, fire, air or smoke ratings, coverage may be accomplished with scraps of not less than 8 sq. ft. in area, and may be limited to not less than 75% of full coverage.

J. Provide air tight seal.

K. Comply with ASTM C 919 and manufacturer's recommendations for location of beads, and seal flanking paths around or through the work, including sealing of partitions above acoustical ceilings.

L. Space fasteners in gypsum boards in accordance with referenced standards and manufacturer's recommendations, except as otherwise indicated.

3.04 SEALING OF EXPOSED ASBESTOS-CONTAINING MATERIALS

A. Seal Asbestos-Containing Material exposed by removals up to an inaccessible spot with a spray foam.
   1. Prior to sealing, permit the exposed edges to dry completely to permit penetration of the foam sealer.

B. Seal edges of Asbestos-Containing Material exposed by removals up to an inaccessible spot with 20 mil thick rubber membrane.
   1. Install rubber membrane, overlapping edges by a minimum of two (2) inches.
   2. Attach the rubber membrane to the substrate through the use of metal clips or equivalent and seal the edge of the rubber membrane with a sealant.

END OF SECTION 092119

SECTION 093000
TILING

PART 1 GENERAL

1.01 SECTION INCLUDES

A. Tile for floor applications.

B. Tile for wall applications.

C. Cementitious backer board as tile substrate.

D. Ceramic trim.

E. Non-ceramic trim.

1.02 RELATED REQUIREMENTS

A. Section 079200 - Joint Sealants: Sealing joints between tile work and adjacent construction and fixtures.

1.03 REFERENCE STANDARDS

A. ANSI A108.11 - American National Standard Specifications for Interior Installation of Cementitious Backer Units.

B. ANSI A118.6 - American National Standard Specifications for Standard Cement Grouts for Tile Installation.

C. ANSI A118.9 - American National Standard Specifications for Test Methods and Specifications for Cementitious Backer Units.

D. ANSI A137.1 - American National Standard Specifications for Ceramic Tile.

E. ASTM C373 - Standard Test Methods for Determination of Water Absorption and Associated Properties by Vacuum Method for Pressed Ceramic Tiles and Glass Tiles and Boil Method for Extruded Ceramic Tiles and Non-tile Fired Ceramic Whiteware Products.

1.04 SUBMITTALS

A. See Section 013000 - Administrative Requirements for submittal procedures.

B. Product Data: Provide manufacturers' data sheets on tile, mortar, grout, and accessories. Include instructions for using grouts and adhesives.

C. Shop Drawings: Indicate tile layout, patterns, color arrangement, perimeter conditions, junctions with dissimilar materials, control and expansion joints, thresholds, ceramic accessories, and setting details.

D. Samples: Mount tile and apply grout on two plywood panels, minimum 18 by 18 inches in size illustrating pattern, color variations, and grout joint size variations.

E. Manufacturer's Certificate: Certify that products meet or exceed specified requirements.

1.05 QUALITY ASSURANCE

A. Manufacturer Qualifications: Company specializing in manufacturing the types of products specified in this section, with minimum five years of documented experience.

1.06 DELIVERY, STORAGE, AND HANDLING

A. Protect adhesives from freezing or overheating in accordance with manufacturer's instructions.

1.07 FIELD CONDITIONS

A. Do not install solvent-based products in an unventilated environment.

B. Maintain ambient and substrate temperature above 50 degrees F and below 100 degrees F during installation and curing of setting materials.

PART 2 PRODUCTS

2.01 TILE

A. Manufacturers: All products by the same manufacturer.
   1. American Olean Corporation: www.americanolean.com/#sle.
   2. Dal-Tile Corporation: www.daltile.com/#sle.
   3. Emser Tile, LLC: www.emser.com/#sle.
   4. Terrazzo & Marble Supply Companies: www.tmsupply.com/#sle.
   5. Florida Tile; www.floridatile.com.
   6. Substitutions: See Section 016000 - Product Requirements.

B. Porcelain Tile: ANSI A137.1, standard grade.
   1. Moisture Absorption: 0 to 0.5 percent as tested in accordance with ASTM C373.
   2. Size: 18 by 18 inch, nominal.
   3. Thickness: 3/8 inch.
   4. Surface Finish: Non-slip.
   5. Color(s): To be selected by Architect from manufacturer's custom range.
   6. Pattern: as indicated on the drawings.

2.02 TRIM AND ACCESSORIES

A. Ceramic Trim: Matching cove base ceramic shapes in sizes coordinated with field tile.
   1. Applications:
      a. Open Edges: Bullnose.
      b. Inside Corners: Jointed.
      c. Floor to Wall Joints: Cove base.
   2. Manufacturers: Same as for tile.

B. Non-Ceramic Trim: AS SCHEDULED, style and dimensions to suit application, for setting using tile mortar or adhesive.
   1. Applications:
   2. Manufacturers:
      a. Schluter-Systems: www.schluter.com/#sle.
      b. Genesis APS International: www.genesis-aps.com/#sle.
      c. Substitutions: See Section 016000 - Product Requirements.

2.03 SETTING MATERIALS

A. Manufacturers:
   1. ARDEX Engineered Cements: www.ardexamericas.com.
   2. Bostik Inc: www.bostik-us.com.
   3. Custom Building Products: www.custombuildingproducts.com.
   4. LATICRETE International, Inc: www.laticrete.com.
   5. Merkrete, by Parex USA, Inc: www.merkrete.com/sle.
   6. Substitutions: See Section 016000 - Product Requirements.

2.04 GROUTS

A. Manufacturers:
   1. ARDEX Engineered Cements: www.ardexamericas.com.
   2. Bostik Inc: www.bostik-us.com.
   3. Custom Building Products: www.custombuildingproducts.com.
   4. LATICRETE International, Inc: www.laticrete.com.
   5. Merkrete, by Parex USA, Inc: www.merkrete.com/sle.
   6. Substitutions: See Section 016000 - Product Requirements.

B. Standard Grout: ANSI A118.6 standard cement grout.
   1. Applications: Use this type of grout where indicated and where no other type of grout is indicated.

2. Use sanded grout for joints 1/8 inch wide and larger; use unsanded grout for joints less than 1/8 inch wide.
3. Color(s): As selected by Architect from manufacturer's full line.
4. Products:
    a. Custom Building Products; Polyblend Non-Sanded Grout: www.custombuildingproducts.com/#sle.
    b. LATICRETE International, Inc; LATICRETE 1500 Sanded Grout: www.laticrete.com/#sle.
    c. Merkrete, by Parex USA, Inc; Merkrete Duracolor Non-Sanded Grout: www.merkrete.com/#sle.
    d. Substitutions: See Section 016000 - Product Requirements.

2.05 MAINTENANCE MATERIALS

A. Grout Sealer: Liquid-applied, moisture and stain protection for existing or new Portland cement grout.
1. Composition: Water-based pigmented urethane acrylic.
2. Color(s): As selected by Architect from manufacturer's full line.
3. Products:
    a. Merkrete, by Parex USA, Inc; Merkrete Revive: www.merkrete.com/#sle.
    b. Substitutions: See Section 016000 - Product Requirements.

B. Tile Sealer: Stain protection for porcelain tile tile.
1. Products:
    a. Custom Building Products; Aqua Mix Enrich 'N' Seal: www.custombuildingproducts.com/#sle.
    b. STONETECH, a division of LATICRETE international, Inc; STONETECH Heavy Duty Stone Sealer: www.laticrete.com/#sle.
    c. Substitutions: See Section 016000 - Product Requirements.

2.06 ACCESSORY MATERIALS

A. Backer Board: Cementitious type complying with ANSI A118.9; high density, glass fiber reinforced, 7/16 inch thick; 2 inch wide coated glass fiber tape for joints and corners.
1. Products:
    a. Custom Building Products; WonderBoard Lite Backerboard: www.custombuildingproducts.com/#sle.

PART 3 EXECUTION

3.01 EXAMINATION

A. Verify that subfloor surfaces are smooth and flat within the tolerances specified for that type of work and are ready to receive tile.

B. Verify that wall surfaces are smooth and flat within the tolerances specified for that type of work, are dust-free, and are ready to receive tile.

C. Verify that subfloor surfaces are dust free and free of substances that could impair bonding of setting materials to subfloor surfaces.

D. Verify that concrete sub-floor surfaces are ready for tile installation by testing for moisture emission rate and alkalinity; obtain instructions if test results are not within limits recommended by tile manufacturer and setting materials manufacturer.

E. Verify that required floor-mounted utilities are in correct location.

3.02 PREPARATION

A. Protect surrounding work from damage.

B. Vacuum clean surfaces and damp clean.

C. Seal substrate surface cracks with filler. Level existing substrate surfaces to acceptable flatness tolerances.

D. Install backer board in accordance with ANSI A108.11 and board manufacturer's instructions. Tape joints and corners, cover with skim coat of setting material to a feather edge.

E. Prepare substrate surfaces for adhesive installation in accordance with adhesive manufacturer's instructions.

3.03 INSTALLATION - GENERAL

A. Lay tile to pattern indicated. Do not interrupt tile pattern through openings.

B. Cut and fit tile to penetrations through tile, leaving sealant joint space. Form corners and bases neatly. Align floor joints.

C. Place tile joints uniform in width, subject to variance in tolerance allowed in tile size. Make grout joints without voids, cracks, excess mortar or excess grout, or too little grout.

D. Form internal angles square and external angles bullnosed.

E. Install non-ceramic trim in accordance with manufacturer's instructions.

F. Sound tile after setting. Replace hollow sounding units.

G. Keep control and expansion joints free of mortar, grout, and adhesive.

H. Prior to grouting, allow installation to completely cure; minimum of 48 hours.

I. Grout tile joints unless otherwise indicated. Use standard grout unless otherwise indicated.

J. At changes in plane and tile-to-tile control joints, use tile sealant instead of grout, with either bond breaker tape or backer rod as appropriate to prevent three-sided bonding.

3.04 CLEANING

A. Clean tile and grout surfaces.

3.05 PROTECTION

A. Do not permit traffic over finished floor surface for 4 days after installation.

END OF SECTION 093000

SECTION 095100
ACOUSTICAL CEILINGS

PART 1 GENERAL

1.01 SECTION INCLUDES

A. Suspended metal grid ceiling system.

B. Acoustical units.

1.02 RELATED REQUIREMENTS

A. Section 016116 - Volatile Organic Compound (VOC) Content Restrictions.

1.03 REFERENCE STANDARDS

A. ASTM C635/C635M - Standard Specification for Manufacture, Performance, and Testing of Metal Suspension Systems for Acoustical Tile and Lay-in Panel Ceilings.

B. ASTM C636/C636M - Standard Practice for Installation of Metal Ceiling Suspension Systems for Acoustical Tile and Lay-In Panels.

C. ASTM E580/E580M - Standard Practice for Installation of Ceiling Suspension Systems for Acoustical Tile and Lay-in Panels in Areas Subject to Earthquake Ground Motions.

D. ASTM E1264 - Standard Classification for Acoustical Ceiling Products.

1.04 ADMINISTRATIVE REQUIREMENTS

A. Sequence work to ensure acoustical ceilings are not installed until building is enclosed, sufficient heat is provided, dust generating activities have terminated, and overhead work is completed, tested, and approved.

B. Do not install acoustical units until after interior wet work is dry.

1.05 SUBMITTALS

A. See Section 013000 - Administrative Requirements for submittal procedures.

B. Product Data: Provide data on suspension system components and acoustical units.

1.06 QUALITY ASSURANCE

A. Suspension System Manufacturer Qualifications: Company specializing in manufacturing the products specified in this section with minimum three years documented experience.

B. Acoustical Unit Manufacturer Qualifications: Company specializing in manufacturing the products specified in this section with minimum three years documented experience.

1.07 FIELD CONDITIONS

A. Maintain uniform temperature of minimum 60 degrees F, and maximum humidity of 40 percent prior to, during, and after acoustical unit installation.

PART 2 PRODUCTS

2.01 MANUFACTURERS

A. Acoustic Tiles/Panels: Match Existing
   1. Armstrong World Industries, Inc; Fine Fisssured: www.armstrong.com.
   2. Acoustic Ceiling Products, Inc; Genesis Standard Series Printed Pro: www.acpideas.com.
   3. CertainTeed Corporation; Fine Fissured High NRC Mineral Fiber Ceiling Panel: www.certainteed.com.

B. Acoustic Tiles/Panels: New Construction
   1. Rockfon; Rockfon Education Standard: www.rockfon.com.

C. Substitutions: See Section 016000 - Product Requirements.

D. Suspension Systems:
   1. Same as for acoustical units.

2.02 ACOUSTICAL UNITS

A. Acoustical Units - General: ASTM E1264, Class A.
   1. VOC Content: As specified in Section 016116.

B. Acoustical Panels, Type 24X24: Painted mineral fiber, with the following characteristics:
   1. Classification: ASTM E1264 Type III.
   2. Size: 24 by 24 inches.
   3. Panel Edge: Square.
   4. Color: White.
   5. Suspension System: Exposed grid.
   6. Products:
      a. Armstrong World Industries, Inc; Fine Fissured 1728 HumiGuard Plus: www.armstrongceilings.com/#sle.
      b. Substitutions: See Section 016000 - Product Requirements.

C. Acoustical Panels, Type 24x48: Painted mineral fiber, with the following characteristics:
   1. Classification: ASTM E1264 Type III.
      a. Form: 2, water felted.
      b. Pattern: "B" - perforated, randomly spaced large holes.
   2. Panel Edge: Square.
   3. Color: White.
   4. Suspension System: Exposed grid.
   5. Products:
      a. Armstrong World Industries, Inc: Fine Fissured 1729 HumiGuard Plus; www.armstrongceilings.com/#sle.

D. Acoustical Panels New Construction: Stone wool (Mineral Wool) ceiling tiles with factory applied latex paint on glass scrim surface Type XX - Stone wool base with membrane faced overlay, with the following characteristics:
   1. Classification: ASTM E1264 Type XX.
      a. Form: 2, water felted.
      b. Pattern: "G" - smooth.
   2. Size: 24 by 48 inch.
   3. Thickness: 5/8 inches.
   4. Light Reflectance: 0.84 percent, determined in accordance with ASTM E1264.
   5. NRC: 0.70 deter,omed om accprdamce wotj ASTM E1264 .
   6. Panel Edge: Square.
   7. Color: White.
   8. Suspension System: Exposed grid.
   9. Products:
      a. Rockfon; Rockfon Education Standard: www.rockfon.com

E. Acoustical PanelsFood Service Areas Washable: Mineral fiber with membrane-faced overlay, with the following characteristics:
   1. Classification: ASTM E1264 Type IV.
   2. Panel Edge: Square.
   3. Color: White.
   4. Suspension System: Exposed grid.
   5. Products:
      a. Armstrong World Industries, Inc; 1720 Clean Room FL: www.armstrongceilings.com/#sle.
      b. Armstrong World Industries, Inc; 1721 Clean Room FL: www.armstrongceilings.com/#sle.
      c. USG Corporation; Mars Acoustical Panels: www.usg.com/ceilings/#sle.
      d. Substitutions: See Section 016000 - Product Requirements.

2.03 SUSPENSION SYSTEM(S)

A. Metal Suspension Systems - General: Complying with ASTM C635/C635M; die cut and interlocking components, with perimeter moldings, hold down clips, stabilizer bars, clips, and splices as required.

2.04 ACCESSORIES

A. Support Channels and Hangers: Galvanized steel; size and type to suit application, seismic requirements, and ceiling system flatness requirement specified.

B. Hanger Wire: 12 gauge, 0.08 inch galvanized steel wire.

C. Perimeter Moldings: Same metal and finish as grid.
   1. At Exposed Grid: Provide L-shaped molding for mounting at same elevation as face of grid.
   2. At Concealed Grid: Provide exposed L-shaped molding.

D. Touch-up Paint: Type, color, and sheen to match acoustical and grid units.

PART 3 EXECUTION

3.01 EXAMINATION

A. Verify existing conditions before starting work.

B. Verify that layout of hangers will not interfere with other work.

3.02 INSTALLATION - SUSPENSION SYSTEM

A. Install suspension system in accordance with ASTM C636/C636M, ASTM E580/E580M, ASTM C636/C636M, ASTM E580/E580M, ASTM C636/C636M, and ASTM E580/E580M and as supplemented in this section.

B. Rigidly secure system, including integral mechanical and electrical components, for maximum deflection of 1:360.

C. Locate system on room axis according to reflected plan.

D. Perimeter Molding: Install at intersection of ceiling and vertical surfaces and at junctions with other interruptions.
   1. Use longest practical lengths.

E. Suspension System, Non-Seismic: Hang suspension system independent of walls, columns, ducts, pipes and conduit. Where carrying members are spliced, avoid visible displacement of face plane of adjacent members.

F. Where ducts or other equipment prevent the regular spacing of hangers, reinforce the nearest affected hangers and related carrying channels to span the extra distance.

G. Do not support components on main runners or cross runners if weight causes total dead load to exceed deflection capability.

H. Support fixture loads using supplementary hangers located within 6 inches of each corner, or support components independently.

I. Do not eccentrically load system or induce rotation of runners.

J. Perimeter Molding: Install at intersection of ceiling and vertical surfaces and at junctions with other interruptions.
   1. Use 1" seismic perimeter molding
   2. Do not use rivets where exposed to public.

K. Replace missing, broken bent or stained grid and tile within the work area.

3.03 INSTALLATION - ACOUSTICAL UNITS

A. Install acoustical units in accordance with manufacturer's instructions.

B. Fit acoustical units in place, free from damaged edges, stains or other defects detrimental to appearance and function.

C. Fit border trim neatly against abutting surfaces.

D. Install acoustical units level, in uniform plane, and free from twist, warp, and dents.

E. Cutting Acoustical Units:
   1. Cut to fit irregular grid and perimeter edge trim.
   2. Make field cut edges of same profile as factory edges.
   3. Double cut and field paint exposed reveal edges.

F. Where round obstructions occur, provide preformed closures to match perimeter molding.

G. Install hold-down clips on panels within 20 ft of an exterior door, and as directed by contract documents.

3.04 TOLERANCES

A. Maximum Variation from Flat and Level Surface: 1/8 inch in 10 feet.

B. Maximum Variation from Plumb of Grid Members Caused by Eccentric Loads: 2 degrees.

END OF SECTION 095100

SECTION 096500
RESILIENT FLOORING

PART 1 GENERAL

1.01 SECTION INCLUDES

A. Resilient tile flooring.

B. Resilient base.

1.02 REFERENCE STANDARDS

A. ASTM F1861 - Standard Specification for Resilient Wall Base.

1.03 SUBMITTALS

A. See Section 013000 - Administrative Requirements for submittal procedures.

B. Product Data: Provide data on specified products, describing physical and performance characteristics; including sizes, patterns and colors available; and installation instructions.

C. Verification Samples: Submit two samples, 12" by 12" inch in size illustrating color and pattern for each resilient flooring product specified.

D. Installer's Qualification Statement.

1.04 QUALITY ASSURANCE

A. Manufacturer Qualifications: Company specializing in manufacturing specified flooring with minimum three years documented experience.

B. Installer Qualifications: Company specializing in installing specified flooring with minimum three years documented experience.

1.05 DELIVERY, STORAGE, AND HANDLING

PART 2 PRODUCTS

2.01 TILE FLOORING

2.02 RESILIENT BASE

A. Resilient Base: ASTM F1861, Type TP, rubber, thermoplastic; style as scheduled.
   1. Height: MATCH EXISTING inches.
   2. Thickness: 0.125 inch.
   3. Finish: Satin.
   4. Color: As indicated on drawings.

PART 3 EXECUTION

3.01 EXAMINATION

A. Verify that surfaces are flat to tolerances acceptable to flooring manufacturer, free of cracks that might telegraph through flooring, clean, dry, and free of curing compounds, surface hardeners, and other chemicals that might interfere with bonding of flooring to substrate.

3.02 PREPARATION

3.03 INSTALLATION - GENERAL

A. Starting installation constitutes acceptance of subfloor conditions.

B. Install in accordance with manufacturer's written instructions.

3.04 INSTALLATION - TILE FLOORING

A. Mix tile from container to ensure shade variations are consistent when tile is placed, unless otherwise indicated in manufacturer's installation instructions.

3.05 INSTALLATION - RESILIENT BASE

A. Fit joints tightly and make vertical. Maintain minimum dimension of 18 inches between joints.

B. Install base on solid backing. Bond tightly to wall and floor surfaces.

END OF SECTION 096500

SECTION 096700
FLUID-APPLIED FLOORING

PART 1 GENERAL LIQUID ELEMENTS

1.01 SECTION INCLUDES

A. Fluid-applied flooring and base.

1.02 RELATED REQUIREMENTS

1.03 REFERENCE STANDARDS

A. ICRI 310.2R - Selecting and Specifying Concrete Surface Preparation for Sealers, Coatings, Polymer Overlays, and Concrete Repair.

1.04 SUBMITTALS

A. See Section 013000 - Administrative Requirements for submittal procedures.

1.05 QUALITY ASSURANCE

PART 2 PRODUCTS

2.01 FLUID-APPLIED FLOORING SYSTEMS

PART 3 EXECUTION

3.01 EXAMINATION

3.02 PREPARATION

A. Remove subfloor ridges and bumps. Fill low spots, cracks, joints, holes, and other defects with subfloor filler.

B. Prepare concrete surfaces according to ICRI 310.2R.

3.03 INSTALLATION - ACCESSORIES

3.04 INSTALLATION - FLOORING

A. Apply in accordance with manufacturer's instructions.

B. Apply each coat to minimum thickness required by manufacturer.

C. Finish to smooth level surface.

3.05 PROTECTION

A. Prohibit traffic on floor finish for 48 hours after installation.

B. Barricade area to protect flooring until fully cured.

END OF SECTION 096700

SECTION 096813
TILE CARPETING

PART 1 GENERAL

1.01 SECTION INCLUDES

A. Carpet tile, fully adhered.

1.02 RELATED REQUIREMENTS

A. Section 016116 - Volatile Organic Compound (VOC) Content Restrictions.

B. Section 033000 - Cast-in-Place Concrete: Restrictions on curing compounds for concrete slabs and floors to receive adhesive-applied flooring.

C. Section 090561 - Common Work Results for Flooring Preparation: Removal of existing floor coverings, cleaning, and preparation.

1.03 REFERENCE STANDARDS

A. ASTM D2859 - Standard Test Method for Ignition Characteristics of Finished Textile Floor Covering Materials.

B. ASTM E648 - Standard Test Method for Critical Radiant Flux of Floor-Covering Systems Using a Radiant Heat Energy Source.

C. ASTM E662 - Standard Test Method for Specific Optical Density of Smoke Generated by Solid Materials

D. NFPA 253 - Standard Method of Test for Critical Radiant Flux of Floor Covering Systems Using a Radiant Heat Energy Source.

1.04 SUBMITTALS

A. See Section 013000 - Administrative Requirements, for submittal procedures.

B. Shop Drawings: Indicate layout of joints, direction of carpet pile, and location of edge moldings.

C. Test Reports: For flooring, leveling and patching compound and adhesives, provide independent laboratory reports and test results showing negative asbestos containing materials content using Polarized Light Microscopy (PLM) test method.

1.05 QUALITY ASSURANCE

A. Installer Qualifications: Company specializing in installing carpet tile with minimum five years documented experience and approved by carpet tile manufacturer.

1.06 FIELD CONDITIONS

A. Store materials in area of installation for minimum period of 24 hours prior to installation.

PART 2 PRODUCTS

2.01 MATERIALS

A. Tile Carpeting, Type Modular: Patterned loop, manufactured in one color dye lot.
   1. Product: Gravity series manufactured by Tandus, A Tarkett Company: www.commercial.tarkett.com.
   2. Tile Size: , nominal.
   3. Thickness:.187 inch pile height.
   4. Color: As indicated on the drawings.
   5. Pattern: As indicated on the drawings.
   6. Critical Radiant Flux: Minimum of 0.45 watts/sq cm, when tested in accordance with ASTM E648 or NFPA 253.
   7. Smoke Evolution: Maximum specific optical density of 450 or less, when tested in accordance with ASTM E 662.
   8. Surface Flammability Ignition: Pass ASTM D2859 (the "pill test").
   9. VOC Content: Comply with Section 016116.

10. Primary Backing Material: Powerbond.
11. Minimum Total Face Weight: 14 oz/sq yd.
12. Min. TARR: 3.5 when tested in accordance with ASTM D5252.
13. Dimensional Stability: Passing Aachen Test.

2.02 ACCESSORIES

A. Sub-Floor Filler: Type recommended by flooring material manufacturer, no latex material allowed.

B. Edge Strips: Embossed aluminum, color as selected by Architect.

C. Stair Nosing: As specified in Section 096500.

D. Adhesives:
1. Compatible with materials being adhered; maximum VOC content as specified in Section 016116.

E. Carpet Tile Adhesive: Recommended by carpet tile manufacturer.

PART 3 EXECUTION

3.01 EXAMINATION

A. Verify that subfloor surfaces are smooth and flat within tolerances specified for that type of work and are ready to receive carpet tile.

B. Verify that wall surfaces are smooth and flat within the tolerances specified for that type of work, are dust-free, and are ready to receive carpet tile.

C. Verify that subfloor surfaces are dust-free and free of substances that could impair bonding of adhesive materials to subfloor surfaces.

D. Cementitious Subfloor Surfaces: Verify that substrates are ready for flooring installation by testing for moisture and alkalinity (pH).
1. Test in accordance with Section 090561.
2. Obtain instructions if test results are not within limits recommended by flooring material manufacturer and adhesive materials manufacturer.

E. Verify that required floor-mounted utilities are in correct location.

3.02 PREPARATION

A. Prepare floor substrates for installation of flooring in accordance with Section 090561.

3.03 INSTALLATION

A. Starting installation constitutes acceptance of subfloor conditions.

B. Install carpet tile in accordance with manufacturer's instructions.

C. Blend carpet from different cartons to ensure minimal variation in color match.

D. Cut carpet tile clean. Fit carpet tight to intersection with vertical surfaces without gaps.

E. Lay carpet tile in square pattern, with pile direction alternating to next unit, set aligned as indicated on shop drawings.

F. Locate change of color or pattern between rooms under door centerline.

G. Trim carpet tile neatly at walls and around interruptions.

H. Complete installation of edge strips, concealing exposed edges.

3.04 CLEANING

A. Remove excess adhesive without damage, from floor, base, and wall surfaces.

B. Clean and vacuum carpet surfaces.

END OF SECTION 096813

SECTION 099113
EXTERIOR PAINTING

PART 1 GENERAL

1.01 SECTION INCLUDES

A. Surface preparation.

B. Field application of paints.

C. Scope: Finish exterior surfaces exposed to view, unless fully factory-finished and unless otherwise indicated, including the following:

D. Do Not Paint or Finish the Following Items:
   1. Items factory-finished unless otherwise indicated; materials and products having factory-applied primers are not considered factory finished.
   2. Items indicated to receive other finishes.
   3. Items indicated to remain unfinished.
   4. Fire rating labels, equipment serial number and capacity labels, and operating parts of equipment.
   5. Non-metallic roofing and flashing.
   6. Marble, granite, slate, and other natural stones.
   7. Floors, unless specifically indicated.
   8. Ceramic and other types of tiles.
   9. Brick, glass unit masonry, architectural concrete, cast stone, integrally colored plaster and stucco.
   10. Exterior insulation and finish system (EIFS).
   11. Glass.
   12. Concealed pipes, ducts, and conduits.

1.02 RELATED REQUIREMENTS

A. Section 016116 - Volatile Organic Compound (VOC) Content Restrictions.

1.03 DEFINITIONS

A. Comply with ASTM D16 for interpretation of terms used in this section.

1.04 REFERENCE STANDARDS

A. ASTM D16 - Standard Terminology for Paint, Related Coatings, Materials, and Applications.

B. MPI (APL) - Master Painters Institute Approved Products List; Master Painters and Decorators Association.

C. MPI (APSM) - Master Painters Institute Architectural Painting Specification Manual.

D. SSPC-SP 1 - Solvent Cleaning.

E. SSPC-SP 2 - Hand Tool Cleaning.

1.05 SUBMITTALS

A. See Section 013000 - Administrative Requirements, for submittal procedures.

B. Product Data: Provide complete list of products to be used, with the following information for each:
   1. Manufacturer's name, product name and/or catalog number, and general product category (e.g. "alkyd enamel").
   2. MPI product number (e.g. MPI #47).
   3. Cross-reference to specified paint system(s) product is to be used in; include description of each system.

C. Samples: Submit two paper chip samples, 4 x 4 inch in size illustrating range of colors and textures available for each surface finishing product scheduled.

D. Certification: By manufacturer that paints and finishes comply with VOC limits specified.

1.06 QUALITY ASSURANCE

A. Manufacturer Qualifications: Company specializing in manufacturing the products specified, with minimum three years documented experience.

B. Applicator Qualifications: Company specializing in performing the type of work specified with minimum three years documented experience and approved by manufacturer.

1.07 DELIVERY, STORAGE, AND HANDLING

A. Deliver products to site in sealed and labeled containers; inspect to verify acceptability.

B. Container Label: Include manufacturer's name, type of paint, brand name, lot number, brand code, coverage, surface preparation, drying time, cleanup requirements, color designation, and instructions for mixing and reducing.

C. Paint Materials: Store at minimum ambient temperature of 45 degrees F and a maximum of 90 degrees F, in ventilated area, and as required by manufacturer's instructions.

1.08 FIELD CONDITIONS

A. Do not apply materials when surface and ambient temperatures are outside the paint product manufacturer's temperature ranges.

B. Follow manufacturer's recommended procedures for producing best results, including testing of substrates, moisture in substrates, and humidity and temperature limitations.

C. Do not apply exterior paint and finishes during rain or snow, or when relative humidity is outside the humidity ranges required by the paint product manufacturer.

D. Minimum Application Temperatures for Latex Paints: 50 degrees F for exterior; unless required otherwise by manufacturer's instructions.

E. Provide lighting level of 80 ft candles measured mid-height at substrate surface.

PART 2 PRODUCTS

2.01 MANUFACTURERS

A. Provide paints and finishes from the same manufacturer to the greatest extent possible.
   1. Substitution of MPI-approved products by a different manufacturer is preferred over substitution of unapproved products by the same manufacturer.
   2. Substitution of a different paint system using MPI-approved products by the same manufacturer will be considered.

B. Paints:
   1. Behr Process Corporation: www.behr.com/#sle.
   2. Glidden Paint: www.glidden.com
   3. PPG Paints: www.ppgpaints.com/#sle.
   4. Sherwin-Williams Company: www.sherwin-williams.com/#sle.

C. Primer Sealers: Same manufacturer as top coats.

D. Substitutions: Not permitted.

2.02 PAINTS AND FINISHES - GENERAL

A. Paints and Finishes: Ready-mixed, unless required to be a field-catalyzed paint.
   1. Where MPI paint numbers are specified, provide products listed in Master Painters Institute Approved Product List, current edition available at www.paintinfo.com, for specified MPI categories, except as otherwise indicated.
   2. Provide paints and finishes of a soft paste consistency, capable of being readily and uniformly dispersed to a homogeneous coating, with good flow and brushing properties, and capable of drying or curing free of streaks or sags.

3. Provide materials that are compatible with one another and the substrates indicated under conditions of service and application, as demonstrated by manufacturer based on testing and field experience.
4. For opaque finishes, tint each coat including primer coat and intermediate coats, one-half shade lighter than succeeding coat, with final finish coat as base color.
5. Supply each paint material in quantity required to complete entire project's work from a single production run.
6. Do not reduce, thin, or dilute paint or finishes or add materials unless such procedure is described explicitly in manufacturer's product instructions.

B. Volatile Organic Compound (VOC) Content: Comply with Section 016116.

C. Flammability: Comply with applicable code for surface burning characteristics.

D. Sheens: Provide the sheens specified; where sheen is not specified, sheen will be selected later by Architect from the manufacturer's full line.

E. Colors: To be selected from manufacturer's full range of available colors.
1. Selection to be made by Architect after award of contract.
2. Allow for minimum of three colors for each system, unless otherwise indicated, without additional cost to Owner.
3. Extend colors to surface edges; colors may change at any edge as directed by Architect.

2.03 PAINT SYSTEMS - EXTERIOR

A. Paint ME-OP-3A - Ferrous Metals, Unprimed, Alkyd, 3 Coat:
1. One coat of alkyd primer.
2. Gloss: Two coats of alkyd enamel; use this sheen for all locations unless otherwise indicated.

B. Paint MgE-OP-3A - Galvanized Metals, Alkyd, 3 Coat:
1. One coat galvanize primer.
2. Gloss: Two coats of alkyd enamel; use this sheen for all locations unless otherwise indicated.

2.04 PRIMERS

A. Primers: Provide the following unless other primer is required or recommended by manufacturer of top coats.
1. Alkyd Primer for Galvanized Metal.

2.05 ACCESSORY MATERIALS

A. Accessory Materials: Provide primers, sealers, cleaning agents, cleaning cloths, sanding materials, and clean-up materials as required for final completion of painted surfaces.

B. Patching Material: Latex filler.

C. Fastener Head Cover Material: Latex filler.

PART 3 EXECUTION

3.01 EXAMINATION

A. Do not begin application of paints and finishes until substrates have been properly prepared.

B. Verify that surfaces are ready to receive work as instructed by the product manufacturer.

C. Examine surfaces scheduled to be finished prior to commencement of work. Report any condition that may potentially effect proper application.

D. If substrate preparation is the responsibility of another installer, notify Architect of unsatisfactory preparation before proceeding.

E. Test shop-applied primer for compatibility with subsequent cover materials.

F. Measure moisture content of surfaces using an electronic moisture meter. Do not apply finishes unless moisture content of surfaces are below the following maximums:

1. Concrete Floors and Traffic Surfaces: 8 percent.

3.02 PREPARATION

A. Clean surfaces thoroughly and correct defects prior to application.

B. Prepare surfaces using the methods recommended by the manufacturer for achieving the best result for the substrate under the project conditions.

C. Remove or repair existing paints or finishes that exhibit surface defects.

D. Remove or mask surface appurtenances, including electrical plates, hardware, light fixture trim, escutcheons, and fittings, prior to preparing surfaces for finishing.

E. Seal surfaces that might cause bleed through or staining of topcoat.

F. Remove mildew from impervious surfaces by scrubbing with solution of tetra-sodium phosphate and bleach. Rinse with clean water and allow surface to dry.

G. Insulated Coverings: Remove dirt, grease, and oil from canvas and cotton.

H. Concrete Floors and Traffic Surfaces: Remove contamination, acid etch, and rinse floors with clear water. Verify required acid-alkali balance is achieved. Allow to dry.

I. Galvanized Surfaces:
   1. Remove surface contamination and oils and wash with solvent according to SSPC-SP 1.
   2. Prepare surface according to SSPC-SP 2.

3.03 APPLICATION

A. Remove unfinished louvers, grilles, covers, and access panels on mechanical and electrical components and paint separately.

B. Apply products in accordance with manufacturer's written instructions and recommendations in "MPI Architectural Painting Specification Manual".

C. Where adjacent sealant is to be painted, do not apply finish coats until sealant is applied.

D. Do not apply finishes to surfaces that are not dry. Allow applied coats to dry before next coat is applied.

E. Apply each coat to uniform appearance.

F. Dark Colors and Deep Clear Colors: Regardless of number of coats specified, apply additional coats until complete hide is achieved.

G. Vacuum clean surfaces of loose particles. Use tack cloth to remove dust and particles just prior to applying next coat.

H. Reinstall electrical cover plates, hardware, light fixture trim, escutcheons, and fittings removed prior to finishing.

3.04 CLEANING

A. Collect waste material that could constitute a fire hazard, place in closed metal containers, and remove daily from site.

3.05 PROTECTION

A. Protect finishes until completion of project.

B. Touch-up damaged finishes after Substantial Completion.

3.06 SCHEDULE - PAINT SYSTEMS

A. Wood: Finish surfaces exposed to view.

B. Steel Fabrications: Finish surfaces exposed to view.
   1. Exterior: ME-OP-3A, gloss; finish all surfaces, including concealed surfaces, before installation.

C. Galvanized Steel: Finish surfaces exposed to view.

1. Exterior: Paint MgE-OP-3A, gloss.

END OF SECTION 099113

SECTION 099123
INTERIOR PAINTING

PART 1 GENERAL

1.01 SECTION INCLUDES

A. Surface preparation.

B. Field application of paints.

C. Scope: Finish interior surfaces exposed to view, unless fully factory-finished and unless otherwise indicated, including the following:
   1. All miscellaneous steel and unfinished metal elements.

D. Do Not Paint or Finish the Following Items:
   1. Items factory-finished unless otherwise indicated; materials and products having factory-applied primers are not considered factory finished.
   2. Items indicated to receive other finishes.
   3. Items indicated to remain unfinished.
   4. Fire rating labels, equipment serial number and capacity labels, bar code labels, and operating parts of equipment.
   5. Marble, granite, slate, and other natural stones.
   6. Floors, unless specifically indicated.
   7. Ceramic and other tiles.
   8. Glass.
   9. Acoustical materials, unless specifically indicated.
   10. Concealed pipes, ducts, and conduits.
   11. Bathroom and Accessories
   12. FRP Doors

1.02 RELATED REQUIREMENTS

A. Section 016116 - Volatile Organic Compound (VOC) Content Restrictions.

1.03 DEFINITIONS

A. Comply with ASTM D16 for interpretation of terms used in this section.

1.04 REFERENCE STANDARDS

A. ASTM D16 - Standard Terminology for Paint, Related Coatings, Materials, and Applications.

B. MPI (APL) - Master Painters Institute Approved Products List; Master Painters and Decorators Association.

C. MPI (APSM) - Master Painters Institute Architectural Painting Specification Manual.

D. SSPC-SP 1 - Solvent Cleaning.

E. SSPC-SP 2 - Hand Tool Cleaning.

1.05 SUBMITTALS

A. See Section 013000 - Administrative Requirements, for submittal procedures.

B. Product Data: Provide complete list of products to be used, with the following information for each:
   1. Manufacturer's name, product name and/or catalog number, and general product category (e.g., "alkyd enamel").
   2. MPI product number (e.g., MPI #47).
   3. Cross-reference to specified paint system(s) product is to be used in; include description of each system.

C. Certification: By manufacturer that paints and finishes comply with VOC limits specified.

1.06 QUALITY ASSURANCE

A. Manufacturer Qualifications: Company specializing in manufacturing the products specified, with minimum three years documented experience.

B. Applicator Qualifications: Company specializing in performing the type of work specified with minimum three years experience and approved by manufacturer.

1.07 DELIVERY, STORAGE, AND HANDLING

A. Deliver products to site in sealed and labeled containers; inspect to verify acceptability.

B. Container Label: Include manufacturer's name, type of paint, brand name, lot number, brand code, coverage, surface preparation, drying time, cleanup requirements, color designation, and instructions for mixing and reducing.

C. Paint Materials: Store at minimum ambient temperature of 45 degrees F and a maximum of 90 degrees F, in ventilated area, and as required by manufacturer's instructions.

1.08 FIELD CONDITIONS

A. Do not apply materials when surface and ambient temperatures are outside the temperature ranges required by the paint product manufacturer.

B. Follow manufacturer's recommended procedures for producing best results, including testing of substrates, moisture in substrates, and humidity and temperature limitations.

C. Minimum Application Temperatures for Paints: 50 degrees F for interiors unless required otherwise by manufacturer's instructions.

D. Provide lighting level of 80 ft candles measured mid-height at substrate surface.

PART 2 PRODUCTS

2.01 MANUFACTURERS

A. Provide paints and finishes from the same manufacturer to the greatest extent possible.
   1. In the event that a single manufacturer cannot provide specified products, minor exceptions will be permitted provided approval by Architect is obtained using the specified procedures for submittals.
   2. Substitution of MPI-approved products by a different manufacturer is preferred over substitution of unapproved products by the same manufacturer.
   3. Substitution of a different paint system using MPI-approved products by the same manufacturer will be considered.

B. Paints:
   1. Behr Process Corporation: www.behr.com/#sle.
   2. Glidden Paint: www.glidden.com
   3. PPG Paints: www.ppgpaints.com/#sle.
   4. Sherwin-Williams Company: www.sherwin-williams.com/#sle.

C. Primer Sealers: Same manufacturer as top coats.

D. Substitutions: Not permitted.

2.02 PAINTS AND FINISHES - GENERAL

A. Paints and Finishes: Ready-mixed, unless intended to be a field-catalyzed paint.
   1. Provide paints and finishes of a soft paste consistency, capable of being readily and uniformly dispersed to a homogeneous coating, with good flow and brushing properties, and capable of drying or curing free of streaks or sags.
   2. For opaque finishes, tint each coat including primer coat and intermediate coats, one-half shade lighter than succeeding coat, with final finish coat as base color.
   3. Supply each paint material in quantity required to complete entire project's work from a single production run.
   4. Do not reduce, thin, or dilute paint or finishes or add materials unless such procedure is specifically described in manufacturer's product instructions.

B. Volatile Organic Compound (VOC) Content: Comply with Section 016116.

C. Flammability: Comply with applicable code for surface burning characteristics.

D. Sheens: Provide the sheens specified; where sheen is not specified, sheen will be selected later by Architect from the manufacturer's full line.

E. Colors: As indicated on drawings.
   1. Allow for minimum of three colors for each system, unless otherwise indicated, without additional cost to Owner.
   2. Extend colors to surface edges; colors may change at any edge as directed by Architect.
   3. In utility areas, finish equipment, piping, conduit, and exposed duct work in colors according to the color coding scheme indicated.

2.03 PAINT SYSTEMS - INTERIOR

A. Paint I-TR-C - Transparent Finish on Concrete Floors.
   1. 1 coat stain.
   2. Sealer: Water Based Sealer for Concrete Floors; MPI #99.
   3. Sealer Sheen:
      a. Gloss: MPI gloss level 6; use this sheen at all locations.

B. Paint MI-OP-3L - Ferrous Metals, Unprimed, Latex, 3 Coat:
   1. One coat of latex primer.
   2. Semi-gloss: Two coats of latex enamel.

C. Paint MI-OP-2L - Ferrous Metals, Primed, Latex, 2 Coat:
   1. Touch-up with latex primer.
   2. Semi-gloss: Two coats of latex enamel; use this sheen for all locations unless otherwise indicated.

D. Paint MgI-OP-3L - Galvanized Metals, Latex, 3 Coat:
   1. One coat galvanize primer.
   2. Semi-gloss: Two coats of latex enamel.

E. Paint CI-OP-3E - Concrete/Masonry, Epoxy Enamel, 3 Coat:
   1. One coat of catalyzed epoxy primer.
   2. Gloss: Two coats of catalyzed epoxy enamel; use this sheen for all locations unless otherwise indicated.

F. Paint GI-OP-3LA - Gypsum Board/Plaster, Latex-Acrylic, 3 Coat:
   1. One coat of latex primer sealer.
   2. Eggshell: Two coats of latex-acrylic enamel; use this sheen for all locations unless otherwise indicated.

G. Paint GI-P-1A - Gypsum Board/Plaster, Primer, 1 Coat:
   1. One coat of latex primer sealer.

2.04 PRIMERS

A. Primers: Provide the following unless other primer is required or recommended by manufacturer of top coats.
   1. Interior Institutional Low Odor/VOC Primer Sealer; MPI #149.
   2. Interior/Exterior Latex Block Filler; MPI #4.
   3. Concrete Floor Primer, Waterborne; MPI #99.
   4. Interior Rust-Inhibitive Water Based Primer; MPI #107.
   5. Interior/Exterior Quick Dry Alkyd Primer for Metal; MPI #76.
   6. Interior Water Based Primer for Galvanized Metal; MPI #134 or #134 X-Green.

2.05 ACCESSORY MATERIALS

A. Accessory Materials: Provide primers, sealers, cleaning agents, cleaning cloths, sanding materials, and clean-up materials as required for final completion of painted surfaces.

B. Patching Material: Latex filler.

C. Fastener Head Cover Material: Latex filler.

PART 3 EXECUTION

3.01 EXAMINATION

A. Verify that surfaces are ready to receive work as instructed by the product manufacturer.

B. Examine surfaces scheduled to be finished prior to commencement of work. Report any condition that may potentially affect proper application.

C. If substrate preparation is the responsibility of another installer, notify Architect of unsatisfactory preparation before proceeding.

D. Test shop-applied primer for compatibility with subsequent cover materials.

E. Measure moisture content of surfaces using an electronic moisture meter. Do not apply finishes unless moisture content of surfaces is below the following maximums:
   1. Gypsum Wallboard: 12 percent.
   2. Concrete Floors and Traffic Surfaces: 8 percent.

3.02 PREPARATION

A. Clean surfaces thoroughly and correct defects prior to application.

B. Prepare surfaces using the methods recommended by the manufacturer for achieving the best result for the substrate under the project conditions.

C. Remove or repair existing paints or finishes that exhibit surface defects.

D. Remove or mask surface appurtenances, including electrical plates, hardware, light fixture trim, escutcheons, and fittings, prior to preparing surfaces or finishing.

E. Seal surfaces that might cause bleed through or staining of topcoat.

F. Remove mildew from impervious surfaces by scrubbing with solution of tetra-sodium phosphate and bleach. Rinse with clean water and allow surface to dry.

G. Concrete Floors and Traffic Surfaces: Remove contamination, acid etch and rinse floors with clear water. Verify required acid-alkali balance is achieved. Allow to dry.

H. Gypsum Board: Fill minor defects with filler compound. Spot prime defects after repair.

I. Insulated Coverings: Remove dirt, grease, and oil from canvas and cotton.

J. Galvanized Surfaces:
   1. Remove surface contamination and oils and wash with solvent according to SSPC-SP 1.
   2. Prepare surface according to SSPC-SP 2.

K. Ferrous Metal:
   1. Solvent clean according to SSPC-SP 1.
   2. Shop-Primed Surfaces: Sand and scrape to remove loose primer and rust. Feather edges to make touch-up patches inconspicuous. Clean surfaces with solvent. Prime bare steel surfaces. Re-prime entire shop-primed item.
   3. Remove rust, loose mill scale, and other foreign substances using methods recommended in writing by paint manufacturer and blast cleaning according to SSPC-SP 6 Commercial Blast Cleaning. Protect from corrosion until coated.

3.03 APPLICATION

A. Apply products in accordance with manufacturer's written instructions and recommendations in "MPI Architectural Painting Specification Manual".

B. Where adjacent sealant is to be painted, do not apply finish coats until sealant is applied.

C. Do not apply finishes to surfaces that are not dry. Allow applied coats to dry before next coat is applied.

D. Apply each coat to uniform appearance in thicknesses specified by manufacturer.

E. Dark Colors and Deep Clear Colors: Regardless of number of coats specified, apply as many coats as necessary for complete hide.

F. Vacuum clean surfaces of loose particles. Use tack cloth to remove dust and particles just prior to applying next coat.

G. Reinstall electrical cover plates, hardware, light fixture trim, escutcheons, and fittings removed prior to finishing.

3.04 CLEANING

A. Collect waste material that could constitute a fire hazard, place in closed metal containers, and remove daily from site.

3.05 PROTECTION

A. Protect finishes until completion of project.

B. Touch-up damaged finishes after Substantial Completion.

3.06 SCHEDULE - PAINT SYSTEMS

A. Concrete Floors: Transparent finish for concrete floors
   1. Interior: I-TR-C, gloss

B. Gypsum Board: Finish surfaces exposed to view.

C. Steel Fabrications: Finish surfaces exposed to view.
   1. Interior: MI-OP-3L, gloss.

D. Galvanized Steel: Finish surfaces exposed to view.
   1. Interior: Mgl-OP-3L.

E. Shop-Primed Metal Items: Finish surfaces exposed to view.
   1. Finish the following items:
      a. Exposed surfaces of steel stairs and railings.
      b. Mechanical equipment.
   2. Interior: MI-OP-2L.

END OF SECTION 099123

SECTION 099733
ENCAPSULATION OF ASBESTOS CONTAINING MATERIALS

PART 1 GENERAL

1.01 DESCRIPTION OF WORK

A. The work includes the encapsulating of the following:
   1. Lock down of removal work areas and abated surfaces
   2. Sealing of exposed edges
   3. Architectural Finish

1.02 SUBMITTALS

A. Product Data: Submit manufacturer's technical information including label analysis and application instructions for each material proposed for use.

B. Material Safety Data Sheet: Submit the Material Safety Data Sheet, or equivalent, in accordance with the OSHA Hazard Communication Standard (29 CFR 1910.1200) for each surfactant and encapsulating material proposed for use on the work. Include a separate attachment for each sheet indicating the specific worker protective equipment proposed for use with the material indicated.

C. Installation Instructions: Submit manufacturer's installation instructions with specific project requirements noted.

1.03 DELIVERY AND STORAGE

A. Deliver materials to the job site in original, new and unopened packages and containers bearing manufacturer's name and label, and following information:
   1. Name or title of material
   2. Manufacturer's stock number and date of manufacture
   3. Manufacturer's name
   4. Thinning instructions
   5. Application instructions

B. Deliver materials together with a copy of the OSHA Material Safety Data Sheet for the material.

1.04 JOB CONDITIONS

A. Apply encapsulating materials only when environmental conditions in the work area are as required by the manufacturer's instructions.

PART 2 PRODUCTS

2.01 ENCAPSULANTS

A. Provide penetrating, bridging type, and/or lockdown encapsulants specifically designed for application to the asbestos-containing material and abated surfaces to which it is being applied and is compatible with the substrate.

PART 3 EXECUTION

3.01 GENERAL

A. Prior to applying any encapsulating material, ensure that application of the sealer will not cause the base material to fail and allow the sealed material to fall of its own weight or separate from the substrate. Should Contractor doubt the ability of the installation to support the sealant, request direction from the Manufacturer before proceeding with the encapsulating work.

B. Do Not Commence Application of encapsulating materials until all removal work within the work area has been completed.

3.02 WORKER PROTECTION

A. Before beginning work with any material for which a Material Safety Data Sheet has been submitted provide workers with the required protective equipment, which may include combination HEPA/chemical cartridges. Require that appropriate protective equipment be used at all times.

3.03 ENCAPSULATION (LOCKDOWN) OF ABATED SURFACES

A. Color the lockdown encapsulant so that visual confirmation of complete and uniform coverage of each coat is possible. Adhere to manufacturer's instructions for coloring.

B. Encapsulate all surfaces in full compliance with manufacturer’s instructions.

3.04 SEALING EXPOSED EDGES

A. Seal edges of Asbestos-Containing Material exposed by removals with two (2) coats of encapsulant.

B. Prior to sealing, permit the exposed edges to dry completely to permit penetration of the sealer.

C. Color the encapsulant contrasting colors in alternate coats so that visual confirmation of complete and uniform coverage of each coat is possible. Adhere to manufacturer's instructions for coloring. At the completion of work the encapsulated surface must be a uniform third color produced by the mixture.

3.05 ARCHITECTURAL FINISH

A. Examine Existing Conditions: Determine if the friable Asbestos-Containing Material to be encapsulated remains sufficiently bonded to receive the encapsulation process and if process will effectively prevent release of asbestos fibers from the material. If the existing
   1. Asbestos-Containing Material is loose and deteriorated, the Contractor must immediately notify the Owner's Representative that removal of friable Asbestos-Containing Material must be accomplished before encapsulation.

B. Before start of work on an architectural finish complete the work of the following:
   1. Section 015733 Worker Protection
   2. Section 015736 Respiratory Protection
   3. Section 015643 Temporary Enclosures
   4. Section 015726 Decontamination Units

C. Comply with all manufacturer's instructions for particular conditions of installation in each case. Consult with manufacturer's technical representative for conditions not covered.

D. Encapsulate all surfaces in full compliance with manufacturer's procedures.

E. At completion of Encapsulation and before removal of Work Area enclosures and Negative Pressure System, decontaminate space in accordance with requirements of Sections 017333 Project Decontamination.

END OF SECTION 099733

SECTION 101400
SIGNAGE

PART 1 GENERAL

1.01 SECTION INCLUDES

A. Room identification and interior door signs.

B. Window Signs

C. Exterior Door Signs

D. Rest room identification signs.

1.02 REFERENCE STANDARDS

A. St. Louis County Police and Fire Chiefs Premises Identification Ordinance - Guidelines for Premises Identification for Educational Group E Facilities.

B. 36 CFR 1191 - Americans with Disabilities Act (ADA) Accessibility Guidelines for Buildings and Facilities; Architectural Barriers Act (ABA) Accessibility Guidelines.

C. ADA Standards - 2010 ADA Standards for Accessible Design.

D. ICC A117.1 - Accessible and Usable Buildings and Facilities.

1.03 SUBMITTALS

A. See Section 013000 - Administrative Requirements, for submittal procedures.

B. Product Data: Manufacturer's printed product literature for each type of sign, indicating sign styles, font, foreground and background colors, locations, overall dimensions of each sign.

C. Signage Schedule: Provide information sufficient to completely define each sign for fabrication, including room number, room name, other text to be applied, sign and letter sizes, fonts, and colors.
   1. When room numbers to appear on signs differ from those on drawings, include the drawing room number on schedule.
   2. When content of signs is indicated to be determined later, request such information from Owner through Architect at least 2 months prior to start of fabrication; upon request, submit preliminary schedule.
   3. Submit for approval by Owner through Architect prior to fabrication.

D. Selection Samples: Where colors are not specified, submit two sets of color selection charts or chips.

1.04 QUALITY ASSURANCE

1.05 DELIVERY, STORAGE, AND HANDLING

A. Package signs as required to prevent damage before installation.

B. Package room identification and door frame signs in sequential order of installation, labeled by floor or building.

PART 2 PRODUCTS

2.01 SIGNAGE APPLICATIONS

A. Accessibility Compliance: Signs are required to comply with ADA Standards and ICC A117.1 and applicable building codes, unless otherwise indicated; in the event of conflicting requirements, comply with the most comprehensive and specific requirements.

B. Room Identification Signs: Provide a sign for every doorway, whether it has a door or not, within the limits of the Work as scheduled.
   1. Sign Type: Flat signs with frame with engraved panel media as specified.
   2. Provide "tactile" signage, with letters raised minimum 1/32 inch and Grade II braille.
   3. Character Height: 1 inch.
   4. Sign Size: 6 inches height by 8 inches width.

5. Sign Text:
   a. First Line: Room number as shown on the drawings.
   b. Second Line: Braille message including first line text information.
6. Example sign indicating layout requirements follows:

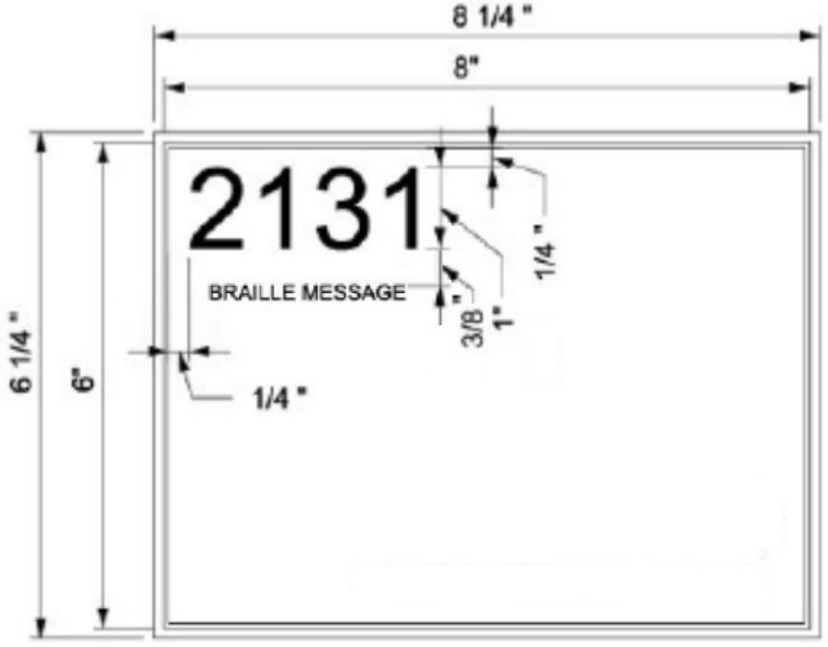

7. Rest Room Identification Signs: Provide a room identification sign and a pictogram sign for every restroom doorway, whether it has a door or not, within the limits of the Work as scheduled.
   a. Sign Type:
      1) Room Identification Signs: Flat signs with frame with engraved panel media as specified.
      2) Pictogram Signs: Flat signs without frame and beveled edges with engraved panel media as specified.
   b. Provide "tactile" signage, with letters raised minimum 1/32 inch and Grade II braille.
   c. Character Height: 1 inch.
   d. Pictogram Height:
      1) International Women Pictogram: 4 inches.
      2) International Men Pictogram: 4 inches.
      3) International Accessible Pictogram: 2-7/8 inches.
   e. Sign Size:
      1) 6 inches height by 8 inches width for room identification sign and dual pictogram sign.
      2) 6 inches height by 6 inches width for single pictogram sign.
   f. Room Identification Sign Text:
      1) First Line: Room number as shown on the drawings.
      2) Second Line: Identify with "MEN" and "WOMEN".
      3) Third Line: Braille message including first line and second line text information.
   g. Pictogram Application:
      1) When sign text is "MEN" and restroom is not accessible use international men pictogram on single pictogram sign.

2) When sign text is "WOMEN" and restroom is not accessible use international women pictogram on single pictogram sign.
3) When sign text is "MEN" and restroom is accessible use international men pictogram and international accessible pictogram on dual pictogram sign.
4) When sign text is "WOMEN" and restroom is accessible use international women pictogram and international accessible pictogram on dual pictogram sign.

h. Example room identification sign indicating layout requirements follows:

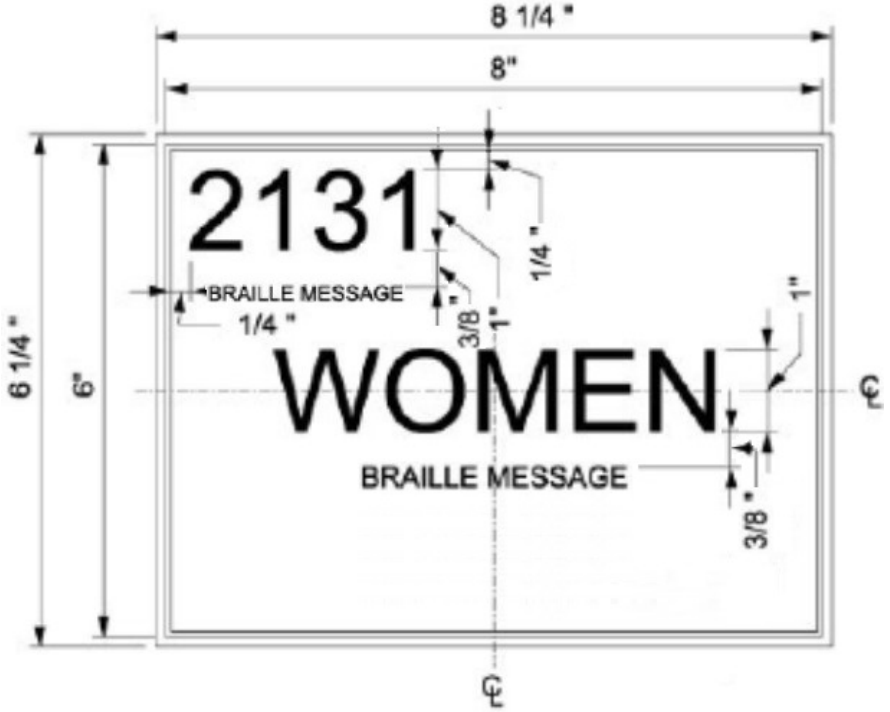

i. Example dual pictogram sign indicating layout requirements follows:

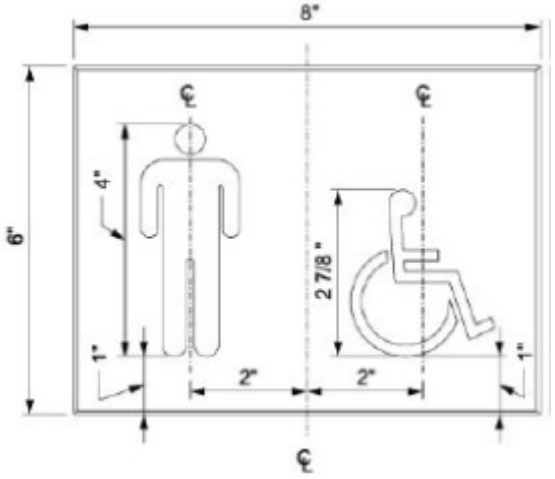

j. Example single pictogram sign indicating layout requirements follows:

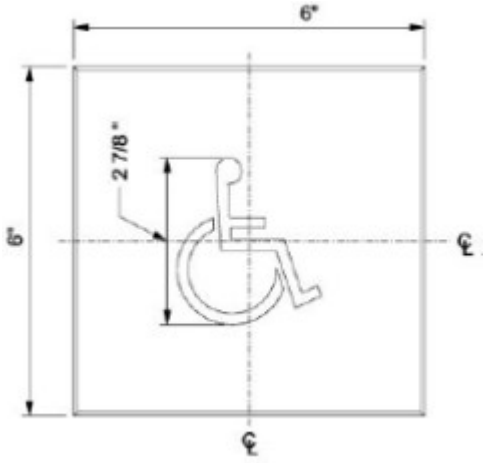

C. Interior Door Signs: Provide a sign above every interior door frame within the limits of the Work as scheduled.

1. Sign Type: Flat signs with numerical room number on ingress/corridor side and egress/room side of door without frame assigned the color of the zone they occupy. Room numbers shall be readable from all angles from the corridor or area to which they open. Use projected signs as required for readability with numbers on both sides. Door flush signs to have room numbers on one side.
2. Character Height: 4 inches.
3. Sign Size: 6 inches height by 14 inches width.
4. Sign Text: Room number as shown on the drawings.
5. Sign is not required to meet ADA Standards for Accessible Design.
6. Example sign indicating layout requirements follows:

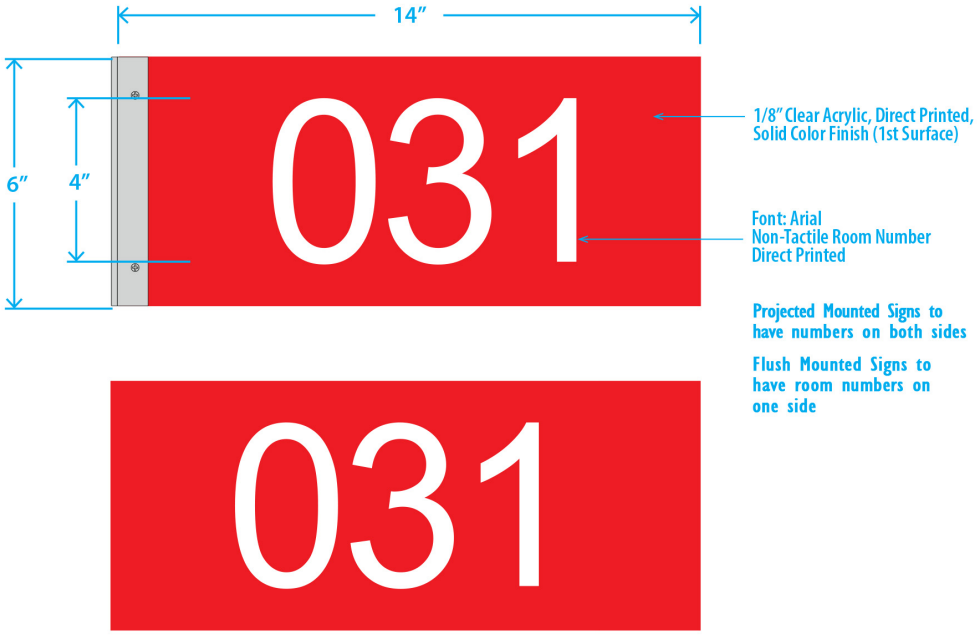

Interior Doors:

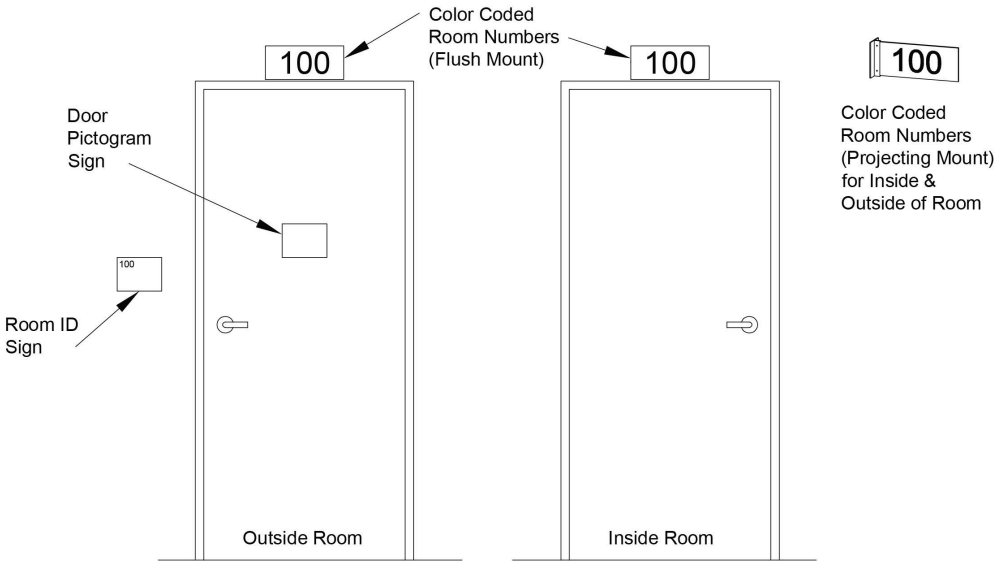

D. Window Signs: Provide a sign on left most facing window mounted on the interior or exterior visible from the exterior within the limits of the Work as scheduled.
   1. Sign Type: Flat signs with numerical room number mounted on left most facing exterior window without frame assigned the color of the zone they occupy. Window flush signs to have room numbers on one side visible from the exterior.
   2. Character Height: 6 inches.
   3. Sign Size: 8 inches height by 18 inches width.
   4. Sign Text: Room number as shown on the drawings.
   5. Sign is not required to meet ADA Standards for Accessible Design.
   6. Example sign indicating layout requirements follows:



E. Exterior Door Signs: Exterior doors are to be numbered in sequential order starting with the main entrance #1 within the limits of the Work as scheduled. Subsequent door shall be numbered in sequential order in a clockwise manner.
   1. Sign Type: Flat signs with numerical door number mounted on exterior and interior side of door without frame assigned the color of the zone they occupy.
   2. Character Height:
      a. Exterior of door: 6 inches.
      b. Interior of door: 4 inches.
   3. Sign Size:

a. Exterior of door: 8 inches height by 12 inches width.
b. Interior of door: 6 inches height by 9 inches width.

4. Sign Text: Room number as shown on the drawings.
5. Sign is not required to meet ADA Standards for Accessible Design.
6. Example sign indicating layout requirements follows:

Exterior:

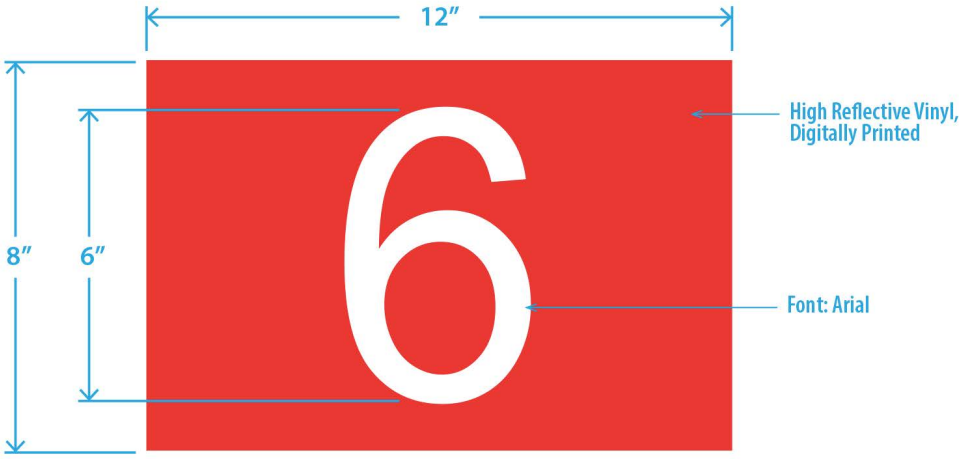

Interior:

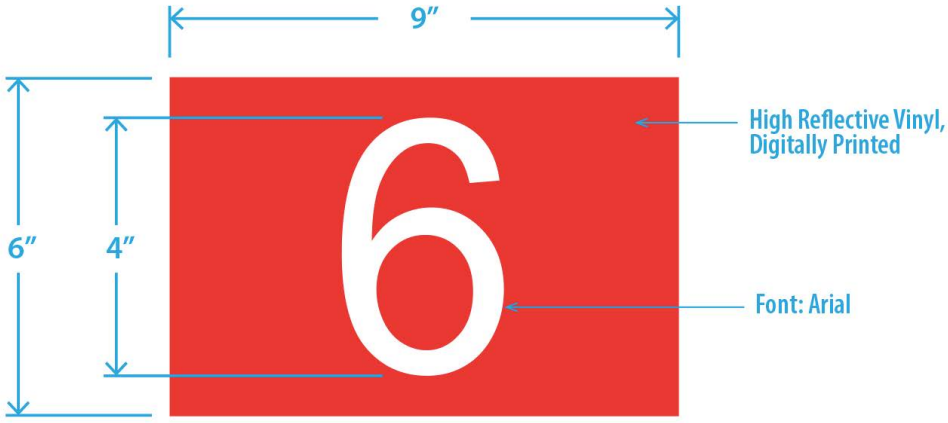

Exterior Doors:

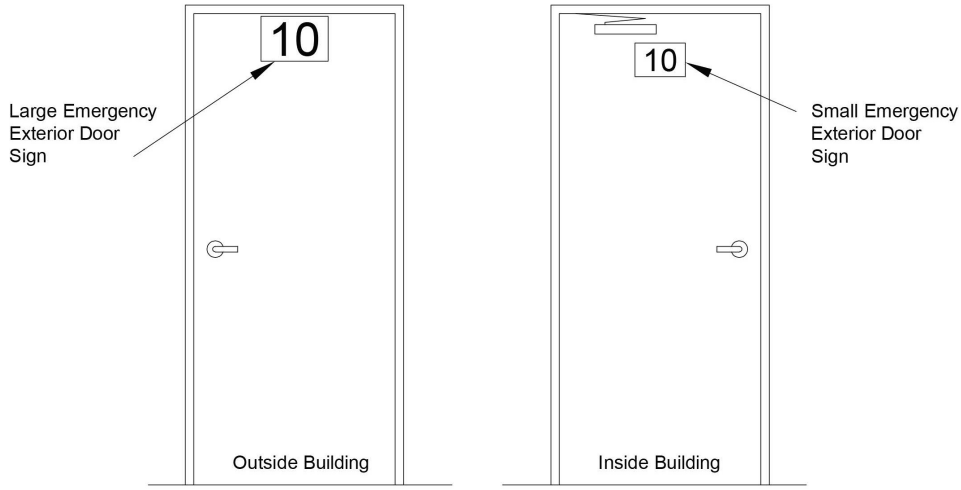

2.02 SIGN TYPES

A. Flat Signs: Signage media with frame.
   1. Basis of Design: Gravotech, Inc.; www.gravograph.us
   2. Edges: Square.
   3. Corners: Square.
   4. Removable signage media held in frame with adhesive snap locks, model Gravograph 36352.
   5. Frame:
      a. Molded plastic, color black.
      b. Size 6 inch by 6 inch, model Gravograph 35025.
      c. Size 6 inch by 8 inch or 8 inch by 6 inch, model Gravograph 35028.
   6. Wall Mounting of Signs: Concealed screws.

B. Flat Signs: Signage media without frame.
   1. Edges: Bevelled.
   2. Corners: Square.
   3. Wall Mounting of Signs: Exposed screw.

C. Interior Door and Window Signs (mounted on interior):
   1. Edges: Square
   2. Corners: Square
   3. Mounting of Signs: Tape adhesive
   4. Core: Sintra or equal foam PVC 3mm thick.
   5. Finish: UV Cured Ink

D. Exterior Door and Window Signs (mounted on exterior):
   1. Edges: Square
   2. Corners: Square
   3. Mounting of Signs: Use clear silicone adhesive
   4. Core: Dibond or equal aluminum clad foam PVC core 3mm thick.
   5. Finish: UV Cured Ink

E. Color and Font: Unless otherwise indicated:
   1. Character Font: Helvetica, Arial, or other sans serif font.
      a. Characters shall not be italic, oblique, script, highly decorative, or of other unusual forms.

2. Character Case: Upper case only.
3. Background Color:
   a. Room Identification and Pictogram Signs - Black
   b. Interior Door Signs, Window Signs, and Exterior Door Signs assigned the color of the zone they occupy
4. Character Color: White.

F. Pictograms: Provide standard international symbols for men, women, and accessible rest rooms.

2.03 TACTILE SIGNAGE MEDIA

A. Engraved Panels: Laminated colored plastic; engraved through face to expose core as background color:
   1. Total Thickness: 1/16 inch.

2.04 NON-TACTILE SIGNAGE MEDIA

A. Engraved Panels: Laminated colored plastic; engraved through face to expose core as text color:
   1. Total Thickness: 1/16 inch.

2.05 SAFETY SIGNAGE - ZONE IDENTIFICATION

A. Zone Designation: All occupiable structures on the premises shall be divided into sections or designated a specific zone agreeable to the AHJ.

B. Zone Color Assignment: The zones shall be assigned a primary or secondary color. Other colors may be used/added of approved by the AHJ.

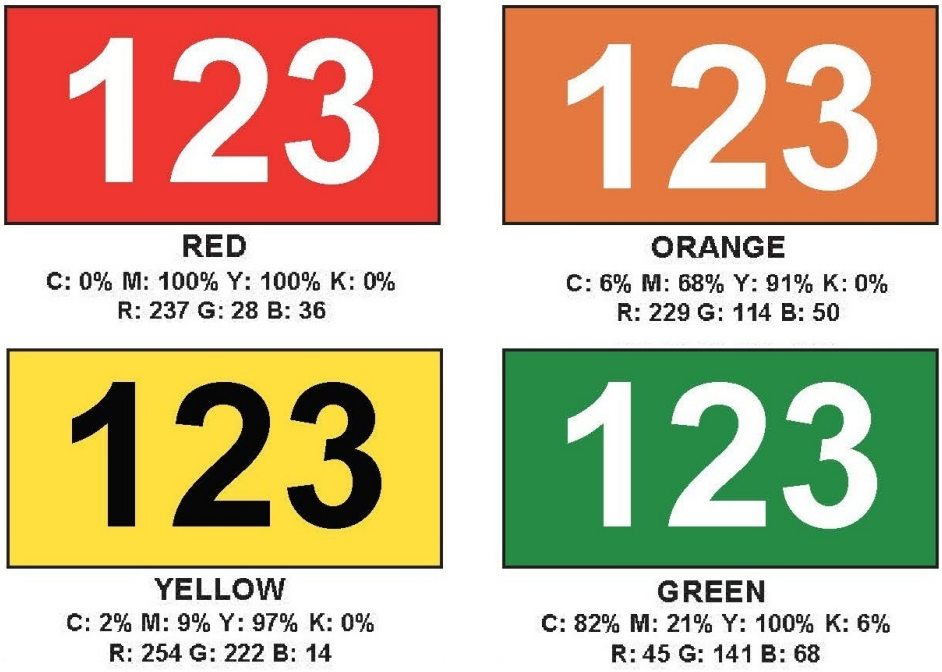



BLUE
C: 89% M: 53% Y: 10% K: 0%
R: 13 G: 112 B: 170



INDIGO
C: 59% M: 90% Y: 0% K: 0%
R: 128 G: 64 B: 152



PURPLE
C: 40% M: 64% Y: 0% K: 0%
R: 159 G: 112 B: 176

2.06 ACCESSORIES

A. Concealed Screws: Stainless steel, galvanized steel, chrome plated, or other non-corroding metal.

B. Exposed Screws: Stainless steel.

PART 3 EXECUTION

3.01 EXAMINATION

A. Verify that substrate surfaces are ready to receive work.

3.02 INSTALLATION

A. Install in accordance with manufacturer's instructions.

B. Install neatly, with horizontal edges level.

C. Locate signs as follows unless otherwise indicated:
   1. Room Identification Signs:
      a. Mounting height at 48 inches above finished floor to bottom outside edge of sign frame.
      b. Locate on wall at latch side of door as close as possible to the door with a minimum distance of 6 inches from latch edge of door to closest vertical outside edge of sign frame.
      c. At double doors, the sign shall be to the right of the right-hand door.
      d. Where there is no wall space on the latch side of a single door, or to the right side of double doors, signs shall be on the nearest adjacent wall.
   2. Rest Room Identification Signs:
      a. Room Identification Signs: Same height and location as other room identification signs.
      b. Pictogram Signs:
         1) Mounting height 54 inches above finished floor to bottom edge of sign.
         2) Locate sign centered on vertical centerline of door.

3) Where the restroom has no door, locate directly above the room identification sign at a mounting height of 55 inches above finished floor to bottom edge of sign.

3. Door Signs:
   a. Interior flush signs: Locate above door frame on ingress/corridor side and egress/room side centered on the horizontal centerline of the door frame head with bottom of sign resting on the top of the door frame.
   b. Interior pedestal signs: Use projected signs as required for readability with numbers on both sides.
   c. Provide 2 fasteners, one at each end of the sign on the horizontal centerline of sign.
4. Window Signs:
   a. Mount to exterior window on the interior (or exterior if interior has security flim installed) of the left most facing window. Attach to glass so it is visible from the exterior.
5. If no location is indicated obtain Owner's instructions.

D. Protect from damage until Date of Substantial Completion; repair or replace damaged items.

END OF SECTION 101400

SECTION 102113.19
PLASTIC TOILET COMPARTMENTS

PART 1 GENERAL

1.01 SECTION INCLUDES

A. Solid plastic toilet compartments.

B. Urinal screens.

1.02 RELATED REQUIREMENTS

A. Section 055000 - Metal Fabrications: Concealed steel support members.

B. Section 061000 - Rough Carpentry: Blocking and supports.

C. Section 102800 - Toilet, Bath, and Laundry Accessories.

1.03 REFERENCE STANDARDS

A. ASTM A666/A666M - Standard Specification for Annealed or Cold-Worked Austenitic Stainless Steel Sheet, Strip, Plate, and Flat Bar.

B. ASTM E84 - Standard Test Method for Surface Burning Characteristics of Building Materials.

1.04 ADMINISTRATIVE REQUIREMENTS

A. Coordination: Coordinate the work with placement of support framing and anchors in walls and ceilings.

1.05 SUBMITTALS

A. See Section 013000 - Administrative Requirements, for submittal procedures.

B. Product Data: Provide data on panel construction, hardware, and accessories.

C. Shop Drawings: Indicate partition plan, elevation views, dimensions, details of wall and floor supports, door swings.

D. Samples: Color chart showing manufacturers full range of colors.

PART 2 PRODUCTS

2.01 MANUFACTURERS

A. Solid Plastic Toilet Compartments:
   1. All American Metal Corp - AAMCO; HDPE: www.allamericanmetal.com/#sle.
   2. Ampco Products, Inc: www.ampco.com/#sle.
   3. Inpro: www.inprocorp.com/#sle.
   4. Metpar Corp: www.metpar.com/#sle.
   5. Partition Systems International of South Carolina; PolyLife HDPE Toilet Partitions: www.psisc.com/#sle.
   6. Scranton Products; Aria Partitions: www.scrantonproducts.com/#sle.
   7. Bobrick Washroom Equipment, Inc; Sierra Series; www.bobrick.com.
   8. Hadrian; www.hadrian-inc.com
   9. Substitutions: Section 016000 - Product Requirements.

2.02 PLASTIC TOILET COMPARTMENTS

A. Toilet Compartments: Factory fabricated doors, pilasters, and divider panels made of solid molded high density polyethylene (HDPE), tested in accordance with NFPA 286, floor-mounted headrail-braced or made of solid color reinforced composite (SCRC), tested in accordance with ASTM E84, Class B, floor-mounted headrail-braced.
   1. Color: as selected by the architect from a full range of colors.

B. Doors:
   1. Thickness: 1 inch.
   2. Width: 24 inch.

3. Width for Handicapped Use: 36 inch, out-swinging.
4. Height: 55 inch.

C. Panels:
1. Thickness: 1 inch.
2. Height: 55 inch.
3. Depth: As indicated on drawings.

D. Pilasters:
1. Thickness: 1 inch.
2. Width: As required to fit space; minimum 3 inch.

E. Screens: Without doors; to match compartments; mounted to wall with two panel brackets.

2.03 ACCESSORIES FOR TOILET PARTITIONS AND SCREENS

A. Pilaster Shoes: Formed ASTM A666, Type 304 stainless steel with satin finish, 3 in high, concealing floor fastenings.
1. Provide adjustment for floor variations with screw jack through steel saddles integral with pilaster.

B. Head Rails: anodized aluminum, 1 inch by 1-1/2 inch size with anti-grip profile and cast socket wall brackets..

C. Pilaster Brackets: Satin stainless steel.

D. Wall Brackets: Continuous type, satin stainless steel.

E. Attachments, Screws, and Bolts: Stainless steel , tamper proof type.
1. For attaching panels and pilasters to brackets: Through-bolts and nuts ; tamper proof.

F. Hardware: Polished stainless steel:
1. Continuous gear hinges, gravity type, adjustable for door close positioning.
2. Nylon bearings.
3. Door Latch: Slide type with exterior emergency access feature.
4. Door strike and keeper with rubber bumper; mounted on pilaster in alignment with door latch.
5. Coat hook with rubber bumper; one per compartment, mounted on door.
a. Provide two per compartment for ADA accessible cubicles.
6. Provide door pull on both sides of door for ADA accessible cubicles.

PART 3 EXECUTION

3.01 EXAMINATION

A. Verify that field measurements are as indicated.

B. Verify correct spacing of and between plumbing fixtures.

C. Verify correct location of built-in framing, anchorage, and bracing.

3.02 INSTALLATION

A. Install partitions secure, rigid, plumb, and level in accordance with manufacturer's instructions.

B. Maintain 3/8 to 1/2 inch (9 to 13mm) space between wall and panels and between wall and end pilasters.

C. Attach panel brackets securely to walls using anchor devices.

D. Attach panels and pilasters to brackets. Locate head rail joints at pilaster center lines.

E. Field touch-up of scratches or damaged finish will not be permitted. Replace damaged or scratched materials with new materials.

3.03 TOLERANCES

A. Maximum Variation From True Position: 1/4 inch (6mm).

B. Maximum Variation From Plumb: 1/8 inch (3mm).

3.04 ADJUSTING

A. Adjust and align hardware to uniform clearance at vertical edge of doors, not exceeding 3/16 inch (5mm).

B. Adjust hinges to position doors in partial opening position when unlatched. Return out-swinging doors to closed position.

C. Adjust adjacent components for consistency of line or plane.

END OF SECTION 102113.19

SECTION 102800
TOILET, BATH, AND LAUNDRY ACCESSORIES

PART 1 GENERAL

1.01 SECTION INCLUDES

A. Commercial toilet accessories.

B. Under-lavatory pipe supply covers.

C. Accessories for toilet rooms, showers, utility rooms, and sinks

D. Diaper changing stations.

E. Utility room accessories.

1.02 RELATED REQUIREMENTS

A. Section 224000 - Plumbing Fixtures: Under-lavatory pipe and supply covers.

1.03 REFERENCE STANDARDS

A. ASTM A123/A123M - Standard Specification for Zinc (Hot-Dip Galvanized) Coatings on Iron and Steel Products.

B. ASTM A269/A269M - Standard Specification for Seamless and Welded Austenitic Stainless Steel Tubing for General Service.

C. ASTM A666/A666M - Standard Specification for Annealed or Cold-Worked Austenitic Stainless Steel Sheet, Strip, Plate, and Flat Bar.

D. ASTM C1036 - Standard Specification for Flat Glass.

E. ASTM C1503 - Standard Specification for Silvered Flat Glass Mirror.

F. ASTM F2285 - Standard Consumer Safety Performance Specification for Diaper Changing Tables for Commercial Use.

1.04 ADMINISTRATIVE REQUIREMENTS

A. Coordinate the work with the placement of internal wall reinforcement, concealed ceiling supports, and reinforcement of toilet partitions to receive anchor attachments.

1.05 SUBMITTALS

A. See Section 013000 - Administrative Requirements, for submittal procedures.

B. Product Data: Submit data on accessories describing size, finish, details of function, and attachment methods.

PART 2 PRODUCTS

2.01 MANUFACTURERS

A. Basis of Design: Products listed are based on preferred products made by Bobrick Washroom Accessories; www.bobrick.com, GOJO Industries; www.gojo.com, Georgia-Pacific Professional; www.blue-connect.com and Kimberly-Clark Corporation; www.kimberly-clark.com..

B. Other Acceptable Manufacturers:
   1. AJW Architectural Products: www.ajw.com.
   2. ASI - American Specialties, Inc: www.americanspecialties.com.
   3. Bradley Corporation: www.bradleycorp.com.
   4. GOJO Industries: www.gojo.com
   5. A.R. Nelson Co: www.arnelson.com
   6. Georgia-Pacific Professional: www.blue-connect.com.
   7. Kimberly Clark Corporation: www.kimberly-clark.com.
   8. Substitutions: Section 016000 - Product Requirements.

C. Under-Lavatory Pipe Supply Covers:
   1. Plumberex Specialty Products, Inc: www.plumberex.com/#sle.

D. Diaper Changing Stations:
   1. Koala Kare Products: www.koalabear.com/#sle.

2.02 MATERIALS

A. Accessories - General: Shop assembled, free of dents and scratches and packaged complete with anchors and fittings, steel anchor plates, adapters, and anchor components for installation.
   1. Grind welded joints smooth.

B. Keys: Provide 4 keys for each accessory to Owner; master key lockable accessories.

C. Stainless Steel Sheet: ASTM A666/A666M, Type 304.

D. Stainless Steel Tubing: ASTM A269/A269M, Grade TP304 or TP316.

E. Mirror Glass: Annealed float glass, ASTM C1036 Type I, Class 1, Quality Q2, with silvering, protective and physical characteristics complying with ASTM C1503.

F. Fasteners, Screws, and Bolts: Hot dip galvanized; tamper-proof; security type.

G. Expansion Shields: Fiber, lead, or rubber as recommended by accessory manufacturer for component and substrate.

2.03 FINISHES

A. Stainless Steel: Satin finish, unless otherwise noted.

B. Galvanizing for Items Other than Sheet: Comply with ASTM A123/A123M; galvanize ferrous metal and fastening devices.

C. Back paint components where contact is made with building finishes to prevent electrolysis.

2.04 COMMERCIAL TOILET ACCESSORIES

A. (TPD-1) Toilet Paper Dispenser: Double Jumbo roll, surface mounted bracket type, stainless steel, spindleless type for tension spring delivery designed to prevent theft of tissue roll.
   1. Product: 9551 manufactured by Kimberly-Clark Corporation.
   2. Mounting height: 29 inches from top of accessory to finished floor and 15" away from front face of toilet.

B. (PTD) Paper Towel Dispenser: 8" diameter roll paper type, translucent smoke-colored plastic, surface mounted, push paddle dispenser, piano hinges and tumbler lock.
   1. Product: 54338 manufactured by Georgia Pacific Professional.
   2. Mounting height: 52 inches from top of accessory to finished floor.

C. (SD) Soap Dispenser: Foam soap dispenser.
   1. Product: 5155-06 manufactured by GOJO Industries Inc.
   2. Mounting height: As indicated on the drawings.

D. (MIR) Mirrors: Stainless steel framed, 6 mm thick float glass mirror.
   1. Product: B-290 Series Mirror manufactured by Bobrick Washroom Accessories.
   2. Size: 18w x 30 inches
   3. Frame: 0.05 inch angle shapes, with mitered, welded, ground corners, and tamperproof hanging system: No 4 finish.
   4. Mirror: Number 1 quality with plastic filler strips protecting mirror edges, back protected by 3/16" thick water resistant polyethylene padding.
   5. Mounting Height: as indicated on the drawings.

E. (ADA-MIR) - ADA Mirrors: Stainless steel framed, 6 mm thick float glass mirror.
   1. Product: B-293 Series Tilt Mirror manufactured by Bobrick Washroom Accessories.
   2. Size: 18w x 30h inches.
   3. Backing: Full mirror sized, minimum 0.03 inch galvanized steel sheet and nonabsorptive water resistand filler material.
   4. Mirror: Number 1 quality with plastic filler strips protecting mirror edges, back protected by 3/16" thick water resistant polyethylene padding, extends from wall 4 inches at top of mirror tapering to 1 inch at bottom of mirror.

5. Mounting height: As indicated on drawings.

F. (GB-1, GB-2) Grab Bars: Stainless steel, 1-1/4 inch outside diameter, minimum 0.05 inch wall thickness, nonslip grasping surface finish, concealed flange mounting; 1-1/2 inch clearance between wall and inside of grab bar.
   1. Product: B-6806 series manufactured by Bobrick Washroom Accessories.
   2. Length and configuration: Configuration as inidicated on drawings.
      a. GB-1 is 36 inches long.
      b. GB-2 is 42 inches long.
   3. Mounting height: 36 inches.

G. (SNR) Sanitation Napkin Receptacles:
   1. Product: 21501506 manufactured by Continental Manufacturing (distributed by American Plastics, 11840 Westline Industrial Drive, St. Louis, MO 63146. Phone 800.325.1051).
   2. Mounting height: 33 inches to top of unit.

H. Diaper Changing Station: Wall-mounted folding diaper changing station for use in commercial toilet facilities, meeting or exceeding ASTM F2285.

2.05 UNDER-LAVATORY PIPE AND SUPPLY COVERS

A. Specified in 224000 - Plumbing Fixtures.

2.06 DIAPER CHANGING STATIONS

A. Diaper Changing Station: Wall-mounted folding diaper changing station for use in commercial toilet facilities, meeting or exceeding ASTM F2285.
   1. Material: Stainless steel.
   2. Mounting: AS DRAWN.
   3. Products:
      a. KOALA KARE KB311-SSWM.

2.07 UTILITY ROOM ACCESSORIES

A. (MHS) Combination Utility Shelf/Mop and Broom Holder: 0.05 inch thick stainless steel, Type 304, with 1/2 inch returned edges, 0.06 inch steel wall brackets.
   1. Product: B-239-34 manufactured by Bobrick Washroom Accessories.
   2. Drying rod: Stainless steel, 1/4 inch diameter.
   3. Hooks: 4, 0.06 inch stainless steel rag hooks at shelf front.
   4. Mop/broom holders: Three spring-loaded rubber cam holders at shelf front.
   5. Length: 34 inches.

PART 3 EXECUTION

3.01 EXAMINATION

A. Verify existing conditions before starting work.

B. Verify exact location of accessories for installation.

C. Verify that field measurements are as indicated on drawings.

D. See Section 061000 for installation of blocking, reinforcing plates, and concealed anchors in walls and ceilings.

E. Verify existing blocking or anchoring is in place.

3.02 PREPARATION

A. Deliver inserts and rough-in frames to site for timely installation.

B. Provide templates and rough-in measurements as required.

3.03 INSTALLATION

A. Install accessories in accordance with manufacturers' instructions in locations indicated on drawings.

B. Install plumb and level, securely and rigidly anchored to substrate.

C. Accessories shall be installed using mechanical attachment. Adhesive alone is NOT acceptable.

D. If any locations are unclear, conflict, or need verification contact the Architect for instruction.

E. Mounting Heights: As required by accessibility regulations and as indicated on the drawings, unless otherwise indicated.

3.04 PROTECTION

A. Protect installed accessories from damage due to subsequent construction operations.

END OF SECTION 102800

SECTION 104400
FIRE PROTECTION SPECIALTIES

PART 1 GENERAL

1.01 SECTION INCLUDES

A. Fire extinguishers.

B. Fire blankets.

C. Fire extinguisher cabinets.

D. Accessories.

1.02 RELATED REQUIREMENTS

A. Section 099123 - Interior Painting: Field paint finish.

1.03 REFERENCE STANDARDS

A. FM (AG) - FM Approval Guide.

B. NFPA 10 - Standard for Portable Fire Extinguishers.

C. UL (DIR) - Online Certifications Directory.

1.04 SUBMITTALS

A. See Section 013000 - Administrative Requirements, for submittal procedures.

B. Product Data: Provide extinguisher operational features.

C. Shop Drawings: Indicate cabinet physical dimensions, rough-in measurements for recessed cabinets, wall bracket mounted measurements, and location.

D. Manufacturer's Certificate: Certify that products meet or exceed specified requirements.

1.05 FIELD CONDITIONS

A. Do not install extinguishers when ambient temperature may cause freezing of extinguisher ingredients.

PART 2 PRODUCTS

2.01 MANUFACTURERS

A. Fire Extinguishers:
   1. Amerex Corporation: www.amerex-fire.com
   2. Ansul, a Tyco Business: www.ansul.com.
   3. Nystrom, Inc: www.nystrom.com/sle.
   4. JL Industries: www.jlindustries.com
   5. Larsen'sManufacturing Co: Larsenmfg.com
   6. Pyro-Chem, a Tyco Business: www.pyrochem.com/#sle.
   7. Substitutions: See Section 016000 - Product Requirements.

B. Fire Extinguisher Cabinets and Accessories:
   1. Larsen's Manufacturing Co: www.larsensmfg.com.
   2. Potter-Roemer: www.potterroemer.com.
   3. Substitutions: See Section 016000 - Product Requirements.

2.02 FIRE EXTINGUISHERS

A. Fire Extinguishers - General: Comply with product requirements of NFPA 10 and applicable codes, whichever is more stringent.
   1. Provide extinguishers labeled by UL (DIR) or FM (AG) for purpose specified and as indicated.

B. Multipurpose Dry Chemical Type Fire Extinguishers: Carbon steel tank, with pressure gauge.
   1. Cartridge Operated: Spun shell.
   2. Class: A:B:C type.

3. Size: 5 pound.
4. Finish: Baked polyester powder coat, Red color.
5. Temperature range: Minus 65 degrees F to 120 degrees F.

2.03 FIRE EXTINGUISHER CABINETS

A. Cabinet Construction: Non-fire rated.
   1. Formed primed steel sheet; 0.036 inch thick base metal.

B. Cabinet Configuration: Recessed type, unless otherwise noted on drawings.
   1. Size to accommodate accessories.
   2. Trimless type.
   3. Provide cabinet enclosure with right angle inside corners and seams, and with formed perimeter trim and door stiles.

C. Door: 0.036 inch metal thickness, reinforced for flatness and rigidity with nylon catch. Hinge doors for 180 degree opening with two butt hinges.

D. Door Glazing: Plastic, clear, 1/8 inch thick UV acrylic. Set in resilient channel gasket glazing.

E. Cabinet Mounting Hardware: Appropriate to cabinet, with pre-drilled holes for placement of anchors.

F. Fabrication: Weld, fill, and grind components smooth.

G. Finish of Cabinet Exterior Trim and Door: No.4 - Brushed stainless steel.

H. Finish of Cabinet Interior: White colored enamel.

2.04 ACCESSORIES

A. Fire Blanket: Fire retardant treated wool; red, 62 by 84 inch size.

B. Fire Blanket Cabinet:
   1. Metal: Cold-rolled steel with a standard finish of red baked acrylic enamel.
   2. Surface mount 68 inch H x 6.25 inch W x 4 inch D
   3. Cabinet Signage: "Fire Blanket" placed on front of door vertically in white letters.

C. Cabinet Signage: Test: "Fire Extinguisher". Placed on glazing, full height of glazing red lettering.

PART 3 EXECUTION

3.01 EXAMINATION

A. Verify existing conditions before starting work.

B. Verify rough openings for cabinet are correctly sized and located.

3.02 INSTALLATION

A. Install in accordance with manufacturer's instructions.

B. Install cabinets plumb and level in wall openings, at code required height in inches from finished floor to inside bottom of cabinet.

C. Secure rigidly in place.

D. Place extinguishers in cabinets.

E. Position cabinet signage at glazing full height of glazing red lettering.

END OF SECTION 104400

SECTION 105617
WALL MOUNTED STANDARDS AND SHELVING

PART 1 GENERAL

1.01 SECTION INCLUDES

A. Steel shelf standards, brackets, and accessories.

B. See drawings for locations and configurations.

1.02 SUBMITTALS

A. See Section 013000 - Administrative Requirements for submittal procedures.

B. Product Data: Manufacturer's data sheets on each product to be used.

1.03 QUALITY ASSURANCE

A. Manufacturer Qualifications: Company specializing in manufacturing products specified in this section, with not less than five years of documented experience.

1.04 DELIVERY, STORAGE, AND HANDLING

A. Store products under cover and elevated above grade.

B. Store products in manufacturer's unopened packaging until ready for installation.

PART 2 PRODUCTS

2.01 MANUFACTURERS

A. Steel Shelf Standards and Brackets:
   1. Knape & Vogt Manufacturing Company; 87™/187™ Series: www.knapeandvogt.com/#sle.
   2. Substitutions: See Section 016000 - Product Requirements.

2.02 COMPONENTS

A. Fasteners: Screws as recommended by manufacturer for intended application or as otherwise required by project conditions. Finish of exposed to view fasteners to match finish of standards and other components.

2.03 MATERIALS

A. Super-Duty Shelf Standards and Brackets: Single-slotted channel standards for brackets adjustable in 1 inch increments along entire length of standard, drilled and countersunk for screws.
   1. Load Capacity: Recommended by manufacturer for loading of 540 to 1,060 pounds per pair of standards.
   2. Face Width: 5/8 inch, single slotted.
   3. Material: 12 gage, 0.1046 inch sheet steel.
   4. Lengths: As indicated on drawings.
   5. Finish: Electroplated, chrome-look.
   6. Brackets: 12 gage, 0.1046 inch sheet steel, reinforced, locking into slots with molded nylon cam lock lever; size to suit shelves; same finish as standards.
   7. Bracket Quantity: Provide one bracket for each 12 inches of standard length.

B. Fasteners: Screws as recommended by manufacturer for intended application or as otherwise required by project conditions.

PART 3 EXECUTION

3.01 EXAMINATION

A. Do not begin installation until substrates have been properly prepared.

B. If substrate preparation is the responsibility of another installer, notify Architect of unsatisfactory preparation before proceeding.

3.02 PREPARATION

A. Clean surfaces thoroughly prior to installation.

B. Prepare surfaces using the methods recommended by the manufacturer for achieving the best result for the substrate under the project conditions.

3.03 INSTALLATION

A. Install in accordance with manufacturer's instructions.

B. Mount standards or brackets to solid backing capable of supporting intended loads.

C. Install brackets, shelving, and accessories.

3.04 PROTECTION

A. Protect installed products until completion of project.

B. Touch-up, repair or replace damaged products before Substantial Completion.

END OF SECTION 105617

SECTION 220523
GENERAL-DUTY VALVES FOR PLUMBING PIPING

PART 1 GENERAL

1.01 SECTION INCLUDES

A. Ball valves.

B. Check valves.

1.02 RELATED REQUIREMENTS

1.03 ABBREVIATIONS AND ACRONYMS

A. CWP: Cold working pressure.

B. EPDM: Ethylene propylene copolymer rubber.

C. NBR: Acrylonitrile-butadiene, Buna-N, or nitrile rubber.

D. NRS: Non-rising stem.

E. OS&Y: Outside screw and yoke.

F. PTFE: Polytetrafluoroethylene.

G. RS: Rising stem.

H. TFE: Tetrafluoroethylene.

I. WOG: Water, oil, and gas.

1.04 REFERENCE STANDARDS

A. ASME B1.20.1 - Pipe Threads, General Purpose, Inch.

B. ASTM B62 - Standard Specification for Composition Bronze or Ounce Metal Castings.

C. AWWA C606 - Grooved and Shouldered Joints.

D. MSS SP-80 - Bronze Gate, Globe, Angle, and Check Valves.

E. MSS SP-110 - Ball Valves Threaded, Socket-Welding, Solder Joint, Grooved and Flared Ends.

1.05 SUBMITTALS

A. See Section 013000 - Administrative Requirements for submittal procedures.

B. Product Data: Provide data on valves including manufacturers catalog information. Submit performance ratings, rough-in details, weights, support requirements, and piping connections.

PART 2 PRODUCTS

2.01 GENERAL REQUIREMENTS

A. Valve Pressure and Temperature Ratings: No less than rating indicated; as required for system pressures and temperatures.

B. Valve Sizes: Match upstream piping unless otherwise indicated.

C. Valve Actuator Types:
   1. Hand Lever: Quarter-turn valves 6 inch and smaller except plug valves.

D. Insulated Piping Valves: With 2 inch stem extensions and the following features:
   1. Gate Valves: Rising stem.
   2. Ball Valves: Extended operating handle of non-thermal-conductive material, and protective sleeve that allows operation of valve without breaking the vapor seal or disturbing insulation.

E. Valve-End Connections:
   1. Threaded End Valves: ASME B1.20.1.
   2. Grooved End Connections: AWWA C606.

F. General ASME Compliance:

2.02 BRONZE, BALL VALVES

A. General:
   1. Fabricate from dezincification resistant material.
   2. Copper alloys containing more than 15 percent zinc are not permitted.

B. One Piece, Reduced Port with Bronze Trim:
   1. Comply with MSS SP-110.
   2. WSP Rating: 400 psi.
   3. CWP Rating: 600 psi.
   4. Body: Bronze.
   5. End Connections: Pipe press.
   6. Seats: PTFE.

2.03 BRONZE, SWING CHECK VALVES

A. General:
   1. Fabricate from dezincification resistant material.
   2. Copper alloys containing more than 15 percent zinc are not permitted.

B. Class 125:
   1. Pressure and Temperature Rating: MSS SP-80, Type 3.
   2. Design: Y-pattern, horizontal or vertical flow.
   3. WOG Rating: 200 psi.
   4. Body: Bronze, ASTM B62.
   5. End Connections: Threaded.
   6. Disc: Bronze.

PART 3 EXECUTION

3.01 INSTALLATION

A. Provide unions or flanges with valves to facilitate equipment removal and maintenance while maintaining system operation and full accessibility for servicing.

B. Provide separate valve support as required and locate valve with stem at or above center of piping, maintaining unimpeded stem movement.

END OF SECTION 220523

SECTION 220548
VIBRATION AND SEISMIC CONTROLS FOR PLUMBING PIPING AND EQUIPMENT

PART 1 GENERAL

1.01 SECTION INCLUDES

A. External seismic snubber assemblies.

B. Seismic restraint systems.

1.02 RELATED REQUIREMENTS

A. Section 033000 - Cast-in-Place Concrete.

1.03 REFERENCE STANDARDS

A. ASCE 7 - Minimum Design Loads and Associated Criteria for Buildings and Other Structures.

B. ASCE 19 - Structural Applications of Steel Cables for Buildings.

C. FEMA 412 - Installing Seismic Restraints for Mechanical Equipment.

D. FEMA 414 - Installing Seismic Restraints for Duct and Pipe.

E. FEMA E-74 - Reducing the Risks of Nonstructural Earthquake Damage.

F. MFMA-4 - Metal Framing Standards Publication.

G. SMACNA (SRM) - Seismic Restraint Manual Guidelines for Mechanical Systems.

1.04 SUBMITTALS

A. See Section 013000 - Administrative Requirements for submittal procedures.

B. Shop Drawings - Seismic Controls:
   1. Include dimensioned plan views and sections indicating proposed plumbing component locations and distributed system routing, with locations and details of gravity supports and seismic restraints and associated attachments.
   2. Identify anchor manufacturer, type, minimum embedment, minimum spacing, minimum member thickness, and minimum edge distance requirements.
   3. Indicate proposed arrangement of distributed system trapeze support groupings.
   4. Indicate proposed locations for distributed system flexible fittings and/or connections.
   5. Indicate locations of seismic separations where applicable.

C. Product Data:

1.05 QUALITY ASSURANCE

A. Comply with applicable building code.

B. Perform design and installation in accordance with applicable codes.

PART 2 PRODUCTS

2.01 MANUFACTURERS

A. The VMC Group; thevmcgroup.com

B. B-line: www.cooperindustries.com

C. Substitutions: See Section 016000 - Product Requirements.

2.02 PERFORMANCE REQUIREMENTS

A. General:
   1. All vibration isolators, base frames and inertia bases to conform to all uniform deflection and stability requirements under all operating loads.
   2. Steel springs to function without undue stress or overloading.
   3. Steel springs to operate in the linear portion of the load versus deflection curve over deflection range of not less than 50 percent above specified deflection.

4. Lateral to vertical stiffness ratio to not exceed 0.08 with spring deflection at minimum 75 percent of specified deflection.
5. All equipment mounted on vibration isolated bases to have minimum operating clearance of 2 inches between the base and floor or support beneath unless noted otherwise.

2.03 VIBRATION-ISOLATED EQUIPMENT SUPPORT BASES

A. Structural Bases:
1. Construction: Engineered, structural steel frames with welded brackets for side mounting of the isolators.
2. Frames: Square, rectangular or T-shaped.
3. Design: Sufficiently rigid to prevent misalignment or undue stress on machine, and to transmit design loads to isolators and snubbers.

B. Concrete Inertia Bases:
1. Construction: Engineered, steel forms, with integrated isolator brackets and anchor bolts, welded or tied reinforcing bars running both ways in a single layer.
2. Size: 6 inches minimum depth and sized to accommodate elbow supports.
3. Mass: Minimum of 1.5 times weight of isolated equipment.
4. Connecting Point: Reinforced to connect isolators and snubbers to base including template and fastening devices for equipment.
5. Concrete: Filled on site with minimum 3000 psi concrete. See Section 033000 for additional requirements.

2.04 EXTERNAL SEISMIC SNUBBER ASSEMBLIES

A. Description: Steel snubbing assemblies designed for external attachment to both equipment and supporting structure that, as part of a complete system, restrain equipment motion in all directions during a seismic event while maintaining vibration isolation during normal operation.

B. Seismic Snubbing Elements:
1. Air Gap: Between 0.125 inches and 0.25 inches unless otherwise indicated.
2. Points of Contact: Cushioned with resilient material, minimum 0.25 inch thick; capable of being visually inspected for damage and replaced.

C. Comply with:
1. FEMA 412.
2. FEMA 414.
3. FEMA E-74.
4. SMACNA (SRM).

2.05 SEISMIC RESTRAINT SYSTEMS

A. Description: System components and accessories specifically designed for field assembly and attachment of seismic restraints.

B. Cable Restraints:
1. Comply with ASCE 19.
2. Cables: Pre-stretched, galvanized steel wire rope with certified break strength.
3. Cable Connections: Use only swaged end fittings. Cable clips and wedge type end fittings are not permitted in accordance with ASCE 19.
4. Use protective thimbles for cable loops where potential for cable damage exists.

C. Rigid Restraints: Use MFMA-4 steel channel (strut), steel angle, or steel pipe for structural element; suitable for both compressive and tensile design loads.

D. Comply with:
1. FEMA 412.
2. FEMA 413.
3. FEMA 414.

4. FEMA E-74.
5. SMACNA (SRM).

PART 3 EXECUTION

3.01 INSTALLATION

A. Install products in accordance with manufacturer's instructions.

B. Install anchors and fasteners in accordance with ICC Evaluation Services, LLC (ICC-ES) evaluation report conditions of use where applicable.

C. Secure fasteners according to manufacturer's recommended torque settings.

D. Install flexible piping connections to provide sufficient slack for vibration isolation and/or seismic relative displacements as indicated or as required.

3.02 INSTALLATION - GENERAL

A. Install in accordance with manufacturer's instructions.

3.03 INSTALLATION - SEISMIC

A. Comply with:
   1. FEMA 412.
   2. FEMA 414.
   3. FEMA E-74.

B. Seismic Snubbers:
   1. Provide minimum of four seismic snubbers located close to isolators.
   2. Snub equipment designated for post-disaster use to 0.05 inch maximum clearance.
   3. Snub all other equipment between 0.15 inch and 0.25 inch clearance.

C. Floor and Base-Mounted Equipment, Vibration Isolated Equipment and associated Vibration and Seismic Controls for Connections:
   1. Install equipment anchorage items designed to resist seismic design force in any direction.
   2. Install vibration and seismic controls designed to include base and isolator requirements.
   3. Provide flexible connections between equipment and interconnected piping.
   4. Provide isolators and restraints designed for amplified code forces per ASCE 7 and with demonstrated ability to resist required forces including gravity, operational and seismic forces.
   5. Where equipment is not designed to be point loaded, provide base capable of transferring gravity and seismic demands from equipment to isolator base plate anchorage.
   6. Where concrete floor thickness is less than required for expansion anchor installation, install through bolt in lieu of expansion anchor.

3.04 SCHEDULES

A. Pipe Isolation Schedule.
   1. 1 Inch Pipe Size: Isolate 120 diameters from equipment.
   2. 2 Inch Pipe Size: Isolate 90 diameters from equipment.
   3. 3 Inch Pipe Size: Isolate 80 diameters from equipment.
   4. 4 Inch Pipe Size: Isolate 75 diameters from equipment.
   5. 6 Inch Pipe Size: Isolate 60 diameters from equipment.
   6. 8 Inch Pipe Size: Isolate 60 diameters from equipment.

END OF SECTION 220548

SECTION 220553
IDENTIFICATION FOR PLUMBING PIPING AND EQUIPMENT

PART 1 GENERAL

1.01 SECTION INCLUDES

A. Nameplates.

B. Tags.

C. Stencils.

D. Pipe markers.

E. Ceiling tacks.

1.02 REFERENCE STANDARDS

A. ASME A13.1 - Scheme for the Identification of Piping Systems.

B. ASME A13.1 - Scheme for the Identification of Piping Systems.

1.03 SUBMITTALS

A. Submittal is not required.

PART 2 PRODUCTS

2.01 PLUMBING COMPONENT IDENTIFICATION GUIDELINE

A. Pipe Markers: 3/4 inch diameter and higher.

2.02 IDENTIFICATION MANUFACTURERS

A. Kolbi Pipe Marker Co.: www.kolbipipemarkers.com.

B. Seton Identification Products: www.seton.com.

C. Brady Corp. .

D. Craftmark Identification Systems.

E. Labelmaster

F. VisionMark, Inc.

G. Almetek Industries, Inc.

H. Advanced Graphic Engraving: www.advancedgraphicengraving.com.

I. MIFAB, Inc.: www.mifab.com.

J. Substitutions: See Section 016000 - Product Requirements.

2.03 NAMEPLATES

A. Description: Laminated piece with up to three lines of text.
   1. Letter Color: White.
   2. Letter Height: 1/2 inch.
   3. Background Color: Black.

2.04 TAGS

A. Flexible: Vinyl with engraved black letters on light contrasting background color with up to three lines of text. Minimum tag size 1-1/2 inch in diameter.

B. Metal Tags: Brass with stamped letters, character size and words to ANSI A13.1; tag size minimum 1-1/2 inch diameter with smooth edges.

C. Valve Tag Chart: Typewritten 12-point letter size list in anodized aluminum frame.

2.05 PIPE MARKERS

A. Comply with ASME A13.1.

B. Flexible Marker: Factory fabricated, semi-rigid, preformed to fit around pipe or pipe covering; minimum information indicating flow direction arrow and identification of fluid conveyed.

C. Flexible Tape Marker: Flexible, vinyl film tape with pressure-sensitive adhesive backing and printed markings.

D. Underground Flexible Marker: Bright-colored continuously printed ribbon tape, minimum 6 inches wide by 4 mil, 0.004 inch thick, manufactured for direct burial service.

E. Identification Scheme, ASME A13.1:
   1. Primary: External Pipe Diameter, Uninsulated or Insulated.
   2. Secondary: Color scheme per fluid service.
      a. Water; Potable, Cooling, Boiler Feed, and Other: White text on green background.

PART 3 EXECUTION

3.01 INSTALLATION

A. Install flexible nameplates with corrosive-resistant mechanical fasteners, or adhesive. Apply with sufficient adhesive to ensure permanent adhesion and seal with clear lacquer.

B. Install tags in clear view and align with axis of piping

C. Install plastic pipe markers in accordance with manufacturer's instructions.

D. Install plastic tape pipe marker around pipe in accordance with manufacturer's instructions.

E. Install underground plastic pipe markers 6 to 8 inches below finished grade, directly above buried pipe.

F. Install identification in clear view and align with axis of piping.

G. Locate identification not to exceed 20 feet on straight runs including risers and drops, adjacent to each valve and Tee, at each side of penetration of structure or enclosure, and at each obstruction.

H. Locate ceiling tacks to locate valves above lay-in panel ceilings. Locate in corner of panel closest to equipment.

END OF SECTION 220553

SECTION 220719
PLUMBING PIPING INSULATION

PART 1 GENERAL

1.01 SECTION INCLUDES

A. Cellular glass insulation.

B. Flexible elastomeric cellular insulation.

C. Glass fiber insulation.

D. Jacketing and accessories.

1.02 RELATED REQUIREMENTS

A. Section 078400 - Firestopping.

B. Section 099123 - Interior Painting: Painting insulation jacket.

C. Section 221005 - Plumbing Piping: Placement of hangers and hanger inserts.

1.03 REFERENCE STANDARDS

A. ASTM C177 - Standard Test Method for Steady-State Heat Flux Measurements and Thermal Transmission Properties by Means of the Guarded-Hot-Plate Apparatus.

B. ASTM C534/C534M - Standard Specification for Preformed Flexible Elastomeric Cellular Thermal Insulation in Sheet and Tubular Form.

C. ASTM C547 - Standard Specification for Mineral Fiber Pipe Insulation.

D. ASTM C552 - Standard Specification for Cellular Glass Thermal Insulation.

E. ASTM C578 - Standard Specification for Rigid, Cellular Polystyrene Thermal Insulation.

F. ASTM C585 - Standard Practice for Inner and Outer Diameters of Thermal Insulation for Nominal Sizes of Pipe and Tubing.

G. ASTM C591 - Standard Specification for Unfaced Preformed Rigid Cellular Polyisocyanurate Thermal Insulation.

H. ASTM C795 - Standard Specification for Thermal Insulation for Use in Contact with Austenitic Stainless Steel.

I. ASTM E84 - Standard Test Method for Surface Burning Characteristics of Building Materials.

J. ASTM E96/E96M - Standard Test Methods for Gravimetric Determination of Water Vapor Transmission Rate of Materials.

K. UL 723 - Standard for Test for Surface Burning Characteristics of Building Materials.

1.04 SUBMITTALS

A. See Section 013000 - Administrative Requirements for submittal procedures.

B. Product Data: Provide product description, thermal characteristics, list of materials and thickness for each service, and locations.

C. Test Reports: For plumbing piping insulation, provide independent laboratory reports and test results showing negative asbestos containing materials content using Polarized Light Microscopy (PLM) test method.

1.05 QUALITY ASSURANCE

A. Applicator Qualifications: Company specializing in performing the type of work specified in this section with minimum 3 years of experience.

1.06 DELIVERY, STORAGE, AND HANDLING

A. Accept materials on site, labeled with manufacturer's identification, product density, and thickness.

1.07 FIELD CONDITIONS

A. Maintain ambient conditions required by manufacturers of each product.

B. Maintain temperature before, during, and after installation for minimum of 24 hours.

PART 2 PRODUCTS

2.01 REGULATORY REQUIREMENTS

A. Surface Burning Characteristics: Flame spread index/Smoke developed index of 25/50, maximum, when tested in accordance with ASTM E84, UL 723, ASTM E84, or UL 723.

2.02 GLASS FIBER INSULATION

A. Manufacturers:

B. Insulation: ASTM C547and ASTM C795; rigid molded, noncombustible.
   1. K Value: ASTM C177, 0.24 at 75 degrees F.
   2. Maximum Service Temperature: 850 degrees F.
   3. Maximum Moisture Absorption: 0.2 percent by volume.

C. Insulation: ASTM C547and ASTM C795; semi-rigid, noncombustible, end grain adhered to jacket.
   1. K Value: ASTM C177, 0.24 at 75 degrees F.
   2. Maximum Service Temperature: 650 degrees F.
   3. Maximum Moisture Absorption: 0.2 percent by volume.

D. Vapor Barrier Jacket: White Kraft paper with glass fiber yarn, bonded to aluminized film; moisture vapor transmission when tested in accordance with ASTM E96/E96M of 0.02 perm.

E. Vapor Barrier Jacket: ASJ (all service jacket), white, triple-ply laminate polypropylene, mold resistant, metalized polyester vapor barrier film backing.
   1. Manufacturers:
      a. Venture Tape: 1555U; www.venturetape.com.
      b. Polyguard: Insulrap 30 vapor barrier I-30; www.polyguardproducts.com.
      c. Substitutions: See Section 016000 - Product Requirements.

F. Tie Wire: 0.048 inch stainless steel with twisted ends on maximum 12 inch centers.

G. Vapor Barrier Lap Adhesive: Compatible with insulation.

H. Insulating Cement/Mastic: ASTM C195; hydraulic setting on mineral wool.

I. Fibrous Glass Fabric:
   1. Cloth: Untreated; 9 oz/sq yd weight.
   2. Blanket: 1.0 pcf density.
   3. Weave: 5 by 5.

J. Indoor Vapor Barrier Finish:
   1. Cloth: Untreated; 9 oz/sq yd weight.
   2. Vinyl emulsion type acrylic, compatible with insulation, white color.

K. Outdoor Vapor Barrier Mastic: Vinyl emulsion type acrylic or mastic, compatible with insulation, black color.

L. Outdoor Breather Mastic: Vinyl emulsion type acrylic or mastic, compatible with insulation, black color.

M. Insulating Cement: ASTM C449.

2.03 CELLULAR GLASS INSULATION

A. Manufacturers:
   1. Pittsburgh Corning Corporation: www.foamglasinsulation.com.
   2. Substitutions: See Section 016000 - Product Requirements.

B. Insulation: ASTM C552, Type II, Grade 6.

1. K Value: 0.35 at 100 degrees F.
2. Service Temperature Range: From 250 degrees F to 800 degrees F.
3. Water Vapor Permeability: 0.005 perm inch maximum per inch.
4. Water Absorption: 0.5 percent by volume, maximum.

C. Self-Seal Lap Joint Sealant:
1. Compatible with insulation and Jacketing.

D. Insulation Securement:
1. Stripping Tape: Glass fiber-reinforced, 1" wide, Scotch Brand Filament #880 by 3M or approved equal.
a. Application: temporary securement for piping insulation that is covered with metal jacketing afterwiords.
2. Metal Bands: AISI type 304 (BSI 304 S16) stainless steel. 0.5" x 0.015" bands with matching seals.
a. Application: permanent securement for piping insulation that is not covered with metal jacketing afterwards.

E. Factory-applied or Field-applied Jacketing for Underground Piping:
1. PITTWRAP® CW Plus Jacketing: 50 mil thick self-sealing high polymer asphalt membrane with an integral glass scrim and an aluminized Mylar film on the surface.
2. Service Termperature: Up to 20 to 170 degree F.
3. Water Vapor Permeability: 0.002 perm inch.

F. Vapor Retarder Mastic for Underground Application: PITTCOTE 300 Finish - asphalt coating especially formulated for use with FOAMGLAS® insulation.
1. Reinforcing Fabric: PC® Fabric 79, synthetic fabric, 6.5x 6 mesh.

2.04 FLEXIBLE ELASTOMERIC CELLULAR INSULATION

A. Manufacturers:
1. Substitutions: See Section 016000 - Product Requirements.

B. Insulation: Preformed flexible elastomeric cellular rubber insulation complying with ASTM C534/C534M Type I Grade 1; use molded tubular material wherever possible.
1. 'K' value: ASTM C177, 0.25 at 75 degrees F.
2. Minimum Service Temperature: Minus 40 degrees F.
3. Maximum Service Temperature: 250 degrees F.
4. Maximum moisture absorption: 0.2 percent by volume.
5. Connection: Waterproof vapor barrier adhesive.
6. Color: White

C. Elastomeric Foam Adhesive: Air dried, contact adhesive, low VOC, compatible with insulation.

2.05 JACKETING AND ACCESSORIES

A. PVC Plastic Jacket:
1. Jacket: One piece molded type fitting covers and sheet material, off-white color.
a. Minimum Service Temperature: 0 degrees F.
b. Maximum Service Temperature: 150 degrees F.
c. Moisture Vapor Permeability: 0.002 perm inch, maximum, when tested in accordance with ASTM E96/E96M.
d. Thickness: 10 mil, 0.010 inch.
e. Connections: Brush on welding adhesive.
2. Covering Adhesive Mastic: Compatible with insulation.

PART 3 EXECUTION

3.01 EXAMINATION

A. Verify that piping has been tested before applying insulation materials.

B. Verify that surfaces are clean and dry, with foreign material removed.

3.02 INSTALLATION

A. Install in accordance with manufacturer's instructions.

B. Install in accordance with North American Insulation Manufacturers Association (NAIMA) National Insulation Standards.

C. Exposed Piping: Locate insulation and cover seams in least visible locations.

D. Insulated pipes conveying fluids below ambient temperature: Insulate entire system including fittings, valves, unions, flanges, strainers, flexible connections, pump bodies, and expansion joints.

E. Glass fiber insulated pipes conveying fluids below ambient temperature:
   1. Provide vapor barrier jackets, factory-applied or field-applied. Secure with self-sealing longitudinal laps and butt strips with pressure-sensitive adhesive. Secure with outward clinch expanding staples and vapor barrier mastic.
   2. Insulate fittings, joints, and valves with molded insulation of like material and thickness as adjacent pipe. Finish with glass cloth and vapor barrier adhesive or PVC fitting covers.

F. For hot piping conveying fluids 140 degrees F or less, do not insulate flanges and unions at equipment, but bevel and seal ends of insulation.

G. For hot piping conveying fluids over 140 degrees F, insulate flanges and unions at equipment.

H. Glass fiber insulated pipes conveying fluids above ambient temperature:
   1. Provide standard jackets, with or without vapor barrier, factory-applied or field-applied. Secure with self-sealing longitudinal laps and butt strips with pressure-sensitive adhesive. Secure with outward clinch expanding staples.
   2. Insulate fittings, joints, and valves with insulation of like material and thickness as adjoining pipe. Finish with glass cloth and adhesive or PVC fitting covers.

I. Inserts and Shields:
   1. Application: Piping 1-1/2 inches diameter or larger.
   2. Shields: Galvanized steel between pipe hangers or pipe hanger rolls and inserts.
   3. Insert Location: Between support shield and piping and under the finish jacket.
   4. Insert Configuration: Minimum 6 inches long, of same thickness and contour as adjoining insulation; may be factory fabricated.
   5. Insert material: Hydrous calcium silicate insulation or 7.5 lb/cu. ft. density cellular glass insulation.

J. Continue insulation through walls, sleeves, pipe hangers, and other pipe penetrations. Finish at supports, protrusions, and interruptions. At fire separations, see Section 078400.

K. Pipe Exposed in Mechanical Equipment Rooms (less than 10 feet above finished floor): Finish with PVC jacket and fitting covers.

L. Pipe Exposed in Finished Spaces: Finish with PVC jacket and fitting covers.

M. Exterior Applications: Provide vapor barrier jacket. Insulate fittings, joints, and valves with insulation of like material and thickness as adjoining pipe, and finish with glass mesh reinforced vapor barrier cement. Cover with aluminum jacket with seams located on bottom side of horizontal piping.

N. Buried Piping: Provide factory fabricated assembly with inner all-purpose service jacket with self-sealing lap, and asphalt impregnated open mesh glass fabric, with one mil, 0.001 inch thick aluminum foil sandwiched between three layers of bituminous compound; outer surface faced with a polyester film.

O. Buried Piping: Provide metal jacket where the system transitions from below ground to above ground.

3.03 SCHEDULES

A. In no case shall installed piping insulation have insulation thicknesses that are less than what is required by local energy codes and ASHRAE 90.1, based on comparable insulation conductivity values at the specified mean rating temperature.

B. See Plumbing Piping Insulation Application and Thickness Schedule on drawing.

END OF SECTION 220719

SECTION 221005
PLUMBING PIPING

PART 1 GENERAL

1.01 SECTION INCLUDES

A. Domestic water piping, above grade.

1.02 RELATED REQUIREMENTS

A. Section 330110.58 - Disinfection of Water Utility Piping Systems.

B. Section 220516 - Expansion Fittings and Loops for Plumbing Piping.

C. Section 220548 - Vibration and Seismic Controls for Plumbing Piping and Equipment.

D. Section 220553 - Identification for Plumbing Piping and Equipment.

E. Section 220516 - Expansion Fittings and Loops for Plumbing Piping.

F. Section 330110.58 - Disinfection of Water Utility Piping Systems.

1.03 REFERENCE STANDARDS

A. ASME B16.18 - Cast Copper Alloy Solder Joint Pressure Fittings.

B. ASME B16.22 - Wrought Copper and Copper Alloy Solder-Joint Pressure Fittings.

C. ASME B31.9 - Building Services Piping.

D. ASSE 1003 - Water Pressure Reducing Valves for Potable Water Distribution Systems.

E. ASTM A123/A123M - Standard Specification for Zinc (Hot-Dip Galvanized) Coatings on Iron and Steel Products.

F. ASTM B88 - Standard Specification for Seamless Copper Water Tube.

G. ASTM B88M - Standard Specification for Seamless Copper Water Tube (Metric).

H. ASTM B280 - Standard Specification for Seamless Copper Tube for Air Conditioning and Refrigeration Field Service.

I. ASTM B302 - Standard Specification for Threadless Copper Pipe, Standard Sizes.

J. ASTM C4 - Standard Specification for Clay Drain Tile and Perforated Clay Drain Tile.

K. ASTM D2564 - Standard Specification for Solvent Cements for Poly(Vinyl Chloride) (PVC) Plastic Piping Systems.

L. ASTM D2665 - Standard Specification for Poly(Vinyl Chloride) (PVC) Plastic Drain, Waste, and Vent Pipe and Fittings.

M. ASTM D2729 - Standard Specification for Poly(Vinyl Chloride) (PVC) Sewer Pipe and Fittings.

N. ASTM D2846/D2846M - Standard Specification for Chlorinated Poly(Vinyl Chloride) (CPVC) Plastic Hot- and Cold-Water Distribution Systems.

O. ASTM D2855 - Standard Practice for the Two-Step (Primer and Solvent Cement) Method of Joining Poly (Vinyl Chloride) (PVC) or Chlorinated Poly (Vinyl Chloride) (CPVC) Pipe and Piping Components with Tapered Sockets.

P. ASTM D3034 - Standard Specification for Type PSM Poly(Vinyl Chloride) (PVC) Sewer Pipe and Fittings.

Q. ASTM E84 - Standard Test Method for Surface Burning Characteristics of Building Materials.

R. ASTM F441/F441M - Standard Specification for Chlorinated Poly(Vinyl Chloride) (CPVC) Plastic Pipe, Schedules 40 and 80.

S. ASTM F442/F442M - Standard Specification for Chlorinated Poly(Vinyl Chloride) (CPVC) Plastic Pipe (SDR-PR).

T. AWWA C550 - Protective Interior Coatings for Valves and Hydrants.

U. CISPI 301 - Standard Specification for Hubless Cast Iron Soil Pipe and Fittings for Sanitary and Storm Drain, Waste, and Vent Piping Applications.

V. CISPI 310 - Specification for Coupling for Use in Connection with Hubless Cast Iron Soil Pipe and Fittings for Sanitary and Storm Drain, Waste, and Vent Piping Applications.

W. MSS SP-58 - Pipe Hangers and Supports - Materials, Design, Manufacture, Selection, Application, and Installation.

X. MSS SP-67 - Butterfly Valves.

Y. MSS SP-110 - Ball Valves Threaded, Socket-Welding, Solder Joint, Grooved and Flared Ends.

Z. NSF 61 - Drinking Water System Components - Health Effects.

AA. NSF 372 - Drinking Water System Components - Lead Content.

BB. UL 723 - Standard for Test for Surface Burning Characteristics of Building Materials.

1.04 SUBMITTALS

A. See Section 013000 - Administrative Requirements for submittal procedures.

B. Product Data: Provide data on pipe materials, pipe fittings, valves, and accessories. Provide manufacturers catalog information. Indicate valve data and ratings.

1.05 QUALITY ASSURANCE

A. Perform work in accordance with applicable codes.

B. Valves: Manufacturer's name and pressure rating marked on valve body.

C. Welding Materials and Procedures: Comply with ASME BPVC-IX and applicable state labor regulations.

D. Welder Qualifications: Certified in accordance with ASME BPVC-IX.

E. Identify pipe with marking including size, ASTM material classification, ASTM specification, potable water certification, water pressure rating.

1.06 DELIVERY, STORAGE, AND HANDLING

A. Accept valves on site in shipping containers with labeling in place. Inspect for damage.

B. Provide temporary protective coating on cast iron and steel valves.

C. Provide temporary end caps and closures on piping and fittings. Maintain in place until installation.

D. Protect piping systems from entry of foreign materials by temporary covers, completing sections of the work, and isolating parts of completed system.

1.07 FIELD CONDITIONS

A. Do not install underground piping when bedding is wet or frozen.

PART 2 PRODUCTS

2.01 GENERAL REQUIREMENTS

A. Potable Water Supply Systems: Provide piping, pipe fittings, and solder and flux (if used), that comply with NSF 61 and NSF 372 for maximum lead content; label pipe and fittings.

B. Plenum-Installed Acid Waste Piping: Flame-spread index equal or below 25 and smoke-spread index equal or below 50 according to ASTM E84 or UL 723 tests.

2.02 SANITARY SEWER AND VENT PIPING, BURIED WITHIN 5 FEET OF BUILDING

A. CPVC Pipe: ASTM D2846/D2846M, ASTM F441/F441M, or ASTM F442/F442M.
   1. Fittings: CPVC; ASTM D2846/D2846M, ASTM F437, ASTM F438, or ASTM F439.
   2. Joints: ASTM D2846/D2846M, solvent weld with ASTM F493 solvent cement.

B. PVC Pipe: ASTM D2665 or ASTM D3034.
   1. Fittings: PVC.

2. Joints: Solvent welded, with ASTM D2564 solvent cement.

2.03 SANITARY SEWER AND VENT PIPING, ABOVE GRADE

A. Cast Iron Pipe: CISPI 301, hubless, service weight.
   1. Fittings: Cast iron.
   2. Joints: CISPI 310, neoprene gaskets and stainless steel clamp-and-shield assemblies.

2.04 DOMESTIC WATER PIPING, ABOVE GRADE

A. Copper Tube: ASTM B88 (ASTM B88M), Type L (B), Drawn (H).

2.05 PIPE FLANGES, UNIONS, AND COUPLINGS

A. Unions for Pipe Sizes 3 inch and Under:
   1. Ferrous Pipe: Class 150 malleable iron threaded unions.
   2. Copper Tube and Pipe: Class 150 bronze unions with soldered joints.

B. Flanges for Pipe Sizes Over 1 inch:
   1. Ferrous Pipe: Class 150 malleable iron threaded or forged steel slip-on flanges; preformed neoprene gaskets.
   2. Copper Tube and Pipe: Class 150 slip-on bronze flanges; preformed neoprene gaskets.

C. Mechanical Couplings for Grooved and Shouldered Joints: Two or more curved housing segments with continuous key to engage pipe groove, circular C-profile gasket, and bolts to secure and compress gasket.
   1. Dimensions and Testing: In accordance with AWWA C606.
   2. Housing Material: Provide ASTM A47/A47M malleable iron or ductile iron.
   3. Gasket Material: EPDM suitable for operating temperature range from minus 30 degrees F to 230 degrees F.
   4. Bolts and Nuts: Hot dipped galvanized or zinc-electroplated steel.
   5. When pipe is field grooved, provide coupling manufacturer's grooving tools.

D. Dielectric Connections: Union with galvanized or plated steel threaded end, copper solder end, water impervious isolation barrier.

2.06 PIPE HANGERS AND SUPPORTS

A. Provide hangers and supports that comply with MSS SP-58.
   1. If type of hanger or support for a particular situation is not indicated, select appropriate type using MSS SP-58 recommendations.
   2. Overhead Supports: Individual steel rod hangers attached to structure or to trapeze hangers.
      a. Cold and Hot Pipe Sizes 6 inch and Larger: Double hangers.
   3. Trapeze Hangers: Welded steel channel frames attached to structure.
   4. Vertical Pipe Support: Steel riser clamp.
   5. Floor Supports: Concrete pier or steel pedestal with floor flange; fixture attachment.
   6. Rooftop Supports for Low-Slope Roofs: Steel pedestals with bases that rest on top of roofing membrane, not requiring any attachment to the roof structure and not penetrating the roofing assembly, with support fixtures as specified; and as follows:
      a. Bases: High-density polypropylene.
      b. Base Sizes: As required to distribute load sufficiently to prevent indentation of roofing assembly.
      c. Steel Components: Stainless steel or carbon steel hot-dip galvanized after fabrication in accordance with ASTM A123/A123M.
      d. Attachment and Support Fixtures: As recommended by manufacturer, same type as indicated for equivalent indoor hangers and supports; corrosion-resistant material.
      e. Height: Provide minimum clearance of 6 inches under pipe to top of roofing.
      f. Manufacturers:
         1) PHP Systems/Design: www.phpsd.com/#sle.
         2) Miro Industries, Inc.

3) Substitutions: See Section 016000 - Product Requirements.

B. Plumbing Piping - Drain, Waste, and Vent:
   1. Hangers for Pipe Sizes 1/2 to 1-1/2 inch: Malleable iron, adjustable swivel, split ring.
   2. Hangers for Pipe Sizes 2 inch and Over: Carbon steel, adjustable, clevis.
   3. Wall Support for Pipe Sizes to 3 inch: Cast iron hook.
   4. Wall Support for Pipe Sizes 4 inch and Over: Welded steel bracket and wrought steel clamp.
   5. Floor Support: Cast iron adjustable pipe saddle, lock nut, nipple, floor flange, and concrete pier or steel support.
   6. Copper Pipe Support: Carbon steel ring, adjustable, copper plated.

C. Plumbing Piping - Water:
   1. Hangers for Pipe Sizes 1/2 to 1-1/2 inch: Malleable iron, adjustable swivel, split ring.
   2. Hangers for Cold Pipe Sizes 2 inch and Over: Carbon steel, adjustable, clevis.
   3. Hangers for Hot Pipe Sizes 2 to 4 inch: Carbon steel, adjustable, clevis.
   4. Hangers for Hot Pipe Sizes 6 inch and Larger: Adjustable steel yoke, cast iron pipe roll, double hanger.
   5. Wall Support for Pipe Sizes Up to 3 inch: Cast iron hook.
   6. Wall Support for Pipe Sizes 4 inch and Larger: Welded steel bracket and wrought steel clamp.
   7. Wall Support for Hot Pipe Sizes 6 inch and Larger: Welded steel bracket and wrought steel clamp with adjustable steel yoke and cast iron pipe roll.
   8. Floor Support for Cold Pipe: Cast iron adjustable pipe saddle, lock nut, nipple, floor flange, and concrete pier or steel support.
   9. Floor Support for Hot Pipe Sizes to 4 inch: Cast iron adjustable pipe saddle, locknut, nipple, floor flange, and concrete pier or steel support.
   10. Floor Support for Hot Pipe Sizes 6 inch and Larger: Adjustable cast iron pipe roll and stand, steel screws, and concrete pier or steel support.
   11. Copper Pipe Support: Carbon steel ring, adjustable, copper plated.

D. Hanger Fasteners: Attach hangers to structure using appropriate fasteners, as follows:

2.07 BALL VALVES

A. Manufacturers:
   1. Grinnell Products, a Tyco Business: www.grinnell.com.
   2. Nibco, Inc: www.nibco.com.
   3. Uponor, Inc: www.uponorengineering.com/sle.
   4. Substitutions: See Section 016000 - Product Requirements.

B. Construction, 4 inch and Smaller: MSS SP-110, Class 150, 400 psi CWP, bronze or ductile iron body, 304 stainless steel or chrome plated brass ball, regular port, teflon seats and stuffing box ring, blow-out proof stem, lever handle with balancing stops, threaded or grooved ends with union.
   1. Balancing stops for balance valve only.

2.08 BUTTERFLY VALVES

A. Manufacturers:
   1. Crane Company: www.cranecpe.com/#sle.
   2. Grinnell Products; B302: www.grinnell.com/#sle.
   3. Substitutions: See Section 016000 - Product Requirements.

B. Construction 1-1/2 inch and Larger: MSS SP-67, 200 psi CWP, cast or ductile iron body, nickel-plated ductile iron disc, resilient replaceable EPDM seat, wafer ends, extended neck, 10 position lever handle.

C. Provide gear operators for valves 8 inches and larger, and chain-wheel operators for valves mounted over 8 feet above floor.

PART 3 EXECUTION

3.01 EXAMINATION

A. Verify that excavations are to required grade, dry, and not over-excavated.

3.02 PREPARATION

A. Ream pipe and tube ends. Remove burrs. Bevel plain end ferrous pipe.

B. Remove scale and dirt, on inside and outside, before assembly.

C. Prepare piping connections to equipment with flanges or unions.

3.03 INSTALLATION

A. Install in accordance with manufacturer's instructions.

B. Provide non-conducting dielectric connections wherever jointing dissimilar metals.

C. Route piping in orderly manner and maintain gradient. Route parallel and perpendicular to walls.

D. Install piping to maintain headroom, conserve space, and not interfere with use of space.

E. Group piping whenever practical at common elevations.

F. Install piping to allow for expansion and contraction without stressing pipe, joints, or connected equipment. See Section 220516.

G. Provide clearance in hangers and from structure and other equipment for installation of insulation and access to valves and fittings.

H. Provide access where valves and fittings are not exposed.

I. PVC Pipe: Make solvent-welded joints in accordance with ASTM D2855.

J. Sleeve pipes passing through partitions, walls, and floors.

K. Inserts:
   1. Provide inserts for placement in concrete formwork.
   2. Provide inserts for suspending hangers from reinforced concrete slabs and sides of reinforced concrete beams.
   3. Provide hooked rod to concrete reinforcement section for inserts carrying pipe over 4 inches.
   4. Where concrete slabs form finished ceiling, locate inserts flush with slab surface.
   5. Where inserts are omitted, drill through concrete slab from below and provide through-bolt with recessed square steel plate and nut above slab.

L. Pipe Hangers and Supports:
   1. Install in accordance with ASME B31.9.
   2. Support horizontal piping as indicated.
   3. Install hangers to provide minimum 1/2 inch space between finished covering and adjacent work.
   4. Place hangers within 12 inches of each horizontal elbow.
   5. Use hangers with 1-1/2 inch minimum vertical adjustment. Design hangers for pipe movement without disengagement of supported pipe.
   6. Support vertical piping at every other floor. Support riser piping independently of connected horizontal piping.
   7. Where several pipes can be installed in parallel and at same elevation, provide multiple or trapeze hangers.
   8. Provide copper plated hangers and supports for copper piping.
   9. Prime coat exposed steel hangers and supports. Hangers and supports located in crawl spaces, pipe shafts, and suspended ceiling spaces are not considered exposed.
   10. Provide hangers adjacent to motor-driven equipment with vibration isolation; see Section 220548.

11. Support cast iron drainage piping at every joint.

M. Pipe Sleeve-Seal Systems:
1. Install manufactured sleeve-seal systems in sleeves located in grade slabs and exterior concrete walls at piping entrances into building.
2. Provide sealing elements of the size, quantity, and type required for the piping and sleeve inner diameter or penetration diameter.
3. Locate piping in center of sleeve or penetration.
4. Install field assembled sleeve-seal system components in annular space between sleeve and piping.
5. Tighten bolting for a watertight seal.
6. Install in accordance with manufacturer's recommendations.

N. When installing more than one piping system material, ensure system components are compatible and joined to ensure the integrity of the system. Provide necessary joining fittings. Ensure flanges, union, and couplings for servicing are consistently provided.

3.04 APPLICATION

A. Use grooved mechanical couplings and fasteners only in accessible locations.

B. Install unions downstream of valves and at equipment or apparatus connections.

C. Install brass male adapters each side of valves in copper piped system. Solder adapters to pipe.

D. Install globe valves for throttling, bypass, or manual flow control services.

E. Provide lug end butterfly valves adjacent to equipment when provided to isolate equipment.

F. Provide spring-loaded check valves on discharge of water pumps.

G. Provide flow controls in water recirculating systems where indicated.

3.05 TOLERANCES

A. Drainage Piping: Establish invert elevations within 1/2 inch vertically of location indicated and slope to drain at minimum of 1/8 inch per foot slope.

B. Water Piping: Slope at minimum of 1/32 inch per foot and arrange to drain at low points.

3.06 DISINFECTION OF DOMESTIC WATER PIPING SYSTEM

A. Disinfect water distribution system in accordance with Section 330110.58.

B. Prior to starting work, verify system is complete, flushed, and clean.

C. Ensure acidity (pH) of water to be treated is between 7.4 and 7.6 by adding alkali (caustic soda or soda ash) or acid (hydrochloric).

D. Inject disinfectant, free chlorine in liquid, powder, tablet, or gas form throughout system to obtain 50 to 80 mg/L residual.

E. Bleed water from outlets to ensure distribution and test for disinfectant residual at minimum 15 percent of outlets.

F. Maintain disinfectant in system for 24 hours.

G. If final disinfectant residual tests less than 25 mg/L, repeat treatment.

H. Flush disinfectant from system until residual equal to that of incoming water or 1.0 mg/L.

I. Take samples no sooner than 24 hours after flushing, from 10 percent of outlets and from water entry, and analyze in accordance with AWWA C651.

3.07 SCHEDULES

A. Pipe Hanger Spacing:
1. Metal Piping:
a. Pipe Size: 1/2 inch to 1-1/4 inch:
1) Maximum Hanger Spacing: 6.5 ft.

2) Hanger Rod Diameter: 3/8 inches.

b. Pipe Size: 1-1/2 inch to 2 inch:
   1) Maximum Hanger Spacing: 10 ft.
   2) Hanger Rod Diameter: 3/8 inch.

c. Pipe Size: 2-1/2 inch to 3 inch:
   1) Maximum Hanger Spacing: 10 ft.
   2) Hanger Rod Diameter: 1/2 inch.

d. Pipe Size: 4 inch to 6 inch:
   1) Maximum Hanger Spacing: 10 ft.
   2) Hanger Rod Diameter: 5/8 inch.

e. Pipe Size: 8 inch to 12 inch:
   1) Maximum hanger spacing: 14 ft.
   2) Hanger Rod Diameter: 7/8 inch.

f. Pipe Size: 14 inch and Over:
   1) Maximum Hanger Spacing: 20 ft.
   2) Hanger Rod Diameter: 1 inch.

2. Plastic Piping:
   a. All Sizes:
      1) Maximum Hanger Spacing: 6 ft.
      2) Hanger Rod Diameter: 3/8 inch.

END OF SECTION 221005

SECTION 221006
PLUMBING PIPING SPECIALTIES

PART 1 GENERAL

1.01 SECTION INCLUDES

A. Drains.
B. Cleanouts.
C. Hose bibbs.
D. Hydrants.
E. Washing machine boxes and valves.
F. Refrigerator valve and recessed box.
G. Backwater valves.
H. Backflow preventers.
I. Double check valve assemblies.
J. Water hammer arrestors.
K. Sanitary waste interceptors.
L. Mixing valves.

1.02 RELATED REQUIREMENTS

A. Section 011000 - Summary: Product requirements for Owner furnished kitchen equipment.
B. Section 016000 - Product Requirements: Procedures for Owner-supplied products.
C. Section 221005 - Plumbing Piping.

1.03 REFERENCE STANDARDS

A. ADA Standards - 2010 ADA Standards for Accessible Design.
B. ASME A112.6.3 - Floor Drains.
C. ASME A112.6.4 - Roof, Deck, and Balcony Drains.
D. ASSE 1011 - Performance Requirements for Hose Connection Vacuum Breakers.
E. ASSE 1012 - Performance Requirements for Backflow Preventers with an Intermediate Atmospheric Vent.
F. ASSE 1013 - Reduced Pressure Principle (RP) Backflow Prevention Assemblies.
G. ASSE 1019 - Performance Requirements for Wall Hydrant with Backflow Protection and Freeze Resistance.
H. DIN 19580 - Drainage Channels for Vehicular and Pedestrian Areas - Durability, Mass Per Unit Area and Evaluation of Conformity.
I. NSF 61 - Drinking Water System Components - Health Effects.
J. NSF 372 - Drinking Water System Components - Lead Content.
K. PDI-WH 201 - Water Hammer Arresters.

1.04 SUBMITTALS

A. See Section 013000 - Administrative Requirements for submittal procedures.
B. Product Data: Provide component sizes, rough-in requirements, service sizes, and finishes.

1.05 DELIVERY, STORAGE, AND HANDLING

A. Accept specialties on site in original factory packaging. Inspect for damage.

PART 2 PRODUCTS

2.01 GENERAL REQUIREMENTS

A. Specialties in Potable Water Supply Systems: Provide products that comply with NSF 61 and NSF 372 for maximum lead content.

2.02 DRAINS

A. Manufacturers:
   1. Jay R. Smith Manufacturing Company: www.jayrsmith.com.
   2. Josam Company: designed full flow.
   3. Noble Company: www.noblecompany.com.
   4. Zurn Industries, LLC: www.zurn.com.
   5. Wade; www.wadedrains.com.
   6. Mifab; www.mifab.com.

B. Floor Drains:
   1. Manufacturers:
      a. Jay R. Smith Manufacturing Company: www.jrsmith.com/#sle.
      b. MIFAB, Inc; FS1100-C Series: www.mifab.com/#sle.
      c. Zurn Industries, LLC; Z415-BZ1: www.zurn.com/#sle.

C. Floor Drain (FD-1):
   1. ASME A112.6.3; lacquered cast iron or stainless steel, two piece body with double drainage flange, weep holes, reversible clamping collar, and round, adjustable nickel-bronze strainer.

D. Floor Drain Accessory
   1. Inline Floor Drain Trap Sealer
      a. Manufacturer: Rector Seal; http://www.rectorseal.com/index.php/sureseal/
      b. Model: SureSeal
      c. Size: Match floor drain trap size.
      d. Performance: Certified to ASSE 1072 for use in any floor drain at any location.

2.03 CLEANOUTS

A. Manufacturers:
   1. Jay R. Smith Manufacturing Company: www.jayrsmith.com.
   2. Josam Company: www.josam.com.
   3. Zurn Industries, Inc: www.zurn.com.
   4. Wade; www.wade.com.
   5. Substitutions: See Section 016000 - Product Requirements.

2.04 WATER HAMMER ARRESTORS

A. Manufacturers:
   1. Jay R. Smith Manufacturing Company: www.jayrsmith.com.
   2. Watts Regulator Company, a part of Watts Water Technologies: www.wattsregulator.com.
   3. Zurn Industries, LLC: www.zurn.com.
   4. Substitutions: See Section 016000 - Product Requirements.

B. Water Hammer Arrestors:
   1. Stainless steel construction, bellows type sized in accordance with PDI-WH 201, precharged suitable for operation in temperature range minus 100 to 300 degrees F and maximum 250 psi working pressure.

PART 3 EXECUTION

3.01 INSTALLATION

A. Install in accordance with manufacturer's instructions.

B. Extend cleanouts to finished floor or wall surface. Lubricate threaded cleanout plugs with mixture of graphite and linseed oil. Ensure clearance at cleanout for rodding of drainage system.

C. Encase exterior cleanouts in concrete flush with grade.

D. Install floor cleanouts at elevation to accommodate finished floor.

E. Install approved potable water protection devices on plumbing lines where contamination of domestic water may occur; on boiler feed water lines, janitor rooms, fire sprinkler systems, premise isolation, irrigation systems, flush valves, interior and exterior hose bibbs.

F. Install water hammer arrestors complete with accessible isolation valve on hot and cold water supply piping to lavatories sinks and as applicable.

G. Install air chambers on hot and cold water supply piping to each fixture or group of fixtures (each washroom). Fabricate same size as supply pipe or 3/4 inch minimum, and minimum 18 inches long.

END OF SECTION 221006

SECTION 224000
PLUMBING FIXTURES

PART 1 GENERAL

1.01 SECTION INCLUDES

A. Flush valve water closets.

B. Wall hung urinals.

C. Lavatories.

D. Under-lavatory pipe supply covers.

E. Electric bottle fillers.

1.02 RELATED REQUIREMENTS

A. Section 221005 - Plumbing Piping.

B. Section 221006 - Plumbing Piping Specialties.

1.03 REFERENCE STANDARDS

A. ADA Standards - 2010 ADA Standards for Accessible Design.

B. ASHRAE Std 18 - Methods of Testing for Rating Drinking-Water Coolers with Self-Contained Mechanical Refrigeration.

C. ASME A112.6.1M - Floor-Affixed Supports for Off-the-Floor Plumbing Fixtures for Public Use.

D. ASME A112.18.1 - Plumbing Supply Fittings.

E. ASME A112.18.9 - Protectors/Insulators for Exposed Waste and Supplies on Accessible Fixtures.

F. ASME A112.19.2 - Ceramic Plumbing Fixtures.

G. ASSE 1070 - Performance Requirements for Water Temperature Limiting Devices.

H. ASTM E84 - Standard Test Method for Surface Burning Characteristics of Building Materials.

I. ICC A117.1 - Accessible and Usable Buildings and Facilities.

J. NSF 61 - Drinking Water System Components - Health Effects.

K. NSF 372 - Drinking Water System Components - Lead Content.

1.04 SUBMITTALS

A. See Section 013000 - Administrative Requirements for submittal procedures.

B. Product Data: Provide catalog illustrations of fixtures, sizes, rough-in dimensions, utility sizes, trim, and finishes.

C. Maintenance Data: Include fixture trim exploded view and replacement parts lists.

D. Test Results: Provide test results for lead content for all potable water sources where water may be consumed from new fixtures.

1.05 REGULATORY REQUIREMENTS

A. Potable water systems must adhere to the State of Missouri "Get the Lead Out of School Drinking Water Act" per RSMo 160.077.

1.06 DELIVERY, STORAGE, AND HANDLING

A. Accept fixtures on site in factory packaging. Inspect for damage.

B. Protect installed fixtures from damage by securing areas and by leaving factory packaging in place to protect fixtures and prevent use.

PART 2 PRODUCTS

2.01 GENERAL REQUIREMENTS

A. Potable Water Systems: Provide plumbing fittings and faucets that comply with NSF 61 and NSF 372 for maximum lead content; label pipe and fittings. Following completion of the installation of the fixture, the contractor must notify the Owner's Environmental Department and Owner's Construction Manager, so that the lead testing may be completed at each device by the District's Third Party Testing Contractor, where potable water may be consumed.

B. Water Efficiency: EPA WaterSense label is required for all water closets, urinals, lavatory faucets, and showerheads.

2.02 FLUSH VALVE WATER CLOSETS

A. Water Closets:
   1. Vitreous china, ASME A112.19.2, floor mounted, siphon jet flush action, china bolt caps.
   2. Flush Valve: Exposed (top spud).1.6 gallon.
   3. Flush Operation: Manual, oscillating handle.
   4. Handle Height: 44 inches or less.

B. Flush Valves:
   1. Manufacturers:
      a. Sloan Valve Company Model; XL Regal #111: www.sloanvalve.com/#sle.
      b. Substitutions: Not permitted.

2.03 WALL HUNG URINALS (LOW WATER FLOW)

A. Vitreous china, ASME A112.19.2, wall hung with side shields and concealed carrier.
   1. Flush Volume: 0.1 to 0.8 gpf.
   2. Flush Valve: Exposed (top spud).
   3. Flush Operation: Sensor operated.
   4. Trapway Outlet: Integral.
   5. Outlet Size and Location: 2 inches, bottom side.

2.04 LAVATORIES

A. Manufacturers:
   1. American Standard, Inc, : www.americanstandard-us.com.
   2. Kohler Company; Model K-2032: www.us.kohler.com.

B. Wall-Hung Basin:
   1. Vitreous China: ASME A112.19.2; white, rectangular basin with splash lip, front overflow, soap depression, and hanger. Size as indicated on drawings with 4-inch centerset spacing.
   2. Carrier:
      a. ASME A112.6.1M; cast iron and steel frame with tubular legs, lugs for floor and wall attachment, threaded studs for fixture hanger, bearing plate and studs.

2.05 UNDER-LAVATORY PIPE SUPPLY COVERS

A. General:
   1. Insulate exposed drainage piping including hot, cold and tempered water supplies under lavatories or sinks per ADA Standards.
   2. Construction: 1/8 inch PVC with antimicrobial, antifungal and UV resistant properties.
      a. Comply with ASME A112.18.9 for covers on accessible lavatory piping.
      b. Comply with ICC A117.1.

2.06 ELECTRIC WATER BOTTLE FILLER

A. Manufacturers:
   1. Elkay Manufacturing Company: www.elkay.com.

B. Water Cooler: Electric, mechanically refrigerated; surface mounted, ADA compliant; stainless steel top, vinyl on steel body, elevated anti-squirt bubbler with stream guard, automatic stream regulator, push button, mounting bracket; integral air cooled condenser and stainless steel grille.
   1. Capacity: 8 gph of 50 degrees F water with inlet at 80 degrees F and room temperature of 90 degrees F, when tested in accordance with ASHRAE Std 18.
   2. Electrical: 115 VAC, 60 Hertz compressor, 6 foot cord and plug for connection to electric wiring system including grounding connector.

C. Bottle Filler: Sensor activation with automatic 20-second shut-off timer, 1.1 gpm flow rate.
   a. Model:
   b. Model:

PART 3 EXECUTION

3.01 EXAMINATION

A. Verify that walls and floor finishes are prepared and ready for installation of fixtures.

B. Verify that electric power is available and of the correct characteristics.

C. Confirm that millwork is constructed with adequate provision for the installation of counter top lavatories and sinks.

3.02 PREPARATION

A. Rough-in fixture piping connections in accordance with minimum sizes indicated in fixture rough-in schedule for particular fixtures.

3.03 INSTALLATION

A. Install each fixture with trap, easily removable for servicing and cleaning.

B. Provide chrome-plated rigid or flexible supplies to fixtures with loose key stops, reducers, and escutcheons.

C. Install components level and plumb.

D. Install and secure fixtures in place with wall supports and bolts.

E. Solidly attach water closets to floor with lag screws. Lead flashing is not intended to hold fixture in place.

3.04 INTERFACE WITH WORK OF OTHER SECTIONS

A. Review millwork shop drawings. Confirm location and size of fixtures and openings before rough-in and installation.

3.05 ADJUSTING

A. Adjust stops or valves for intended water flow rate to fixtures without splashing, noise, or overflow.

3.06 TESTING

A. Perform independent testing, using the Owner's Third Party Consultant for Lead in Drinking Water for lead content on all potable water sources from new fixtures where water may be consumed. Submit test results and certification that lead content is acceptable in meeting the State of Missouri Get the Lead Out of School Drinking Water Act.

3.07 CLEANING

A. Clean plumbing fixtures and equipment.

3.08 PROTECTION

A. Protect installed products from damage due to subsequent construction operations.

B. Do not permit use of fixtures by construction personnel.

C. Repair or replace damaged products before Date of Substantial Completion.

3.09 SCHEDULES

A. Fixture Heights: Install fixtures to heights above finished floor as indicated on drawings.

B. Fixture Rough-In: As scheduled on drawings

END OF SECTION 224000

SECTION 230593
TESTING, ADJUSTING, AND BALANCING FOR HVAC

PART 1 GENERAL

1.01 SECTION INCLUDES

A. Testing, adjustment, and balancing of air systems.

1.02 RELATED REQUIREMENTS

A. Section 014000 - Quality Requirements: Employment of testing agency and payment for services.

1.03 REFERENCE STANDARDS

A. AABC (NSTSB) - AABC National Standards for Total System Balance, 7th Edition.

B. ASHRAE Std 111 - Measurement, Testing, Adjusting, and Balancing of Building HVAC Systems.

C. NEBB (TAB) - Procedural Standard for Testing, Adjusting and Balancing of Environmental Systems.

D. SMACNA (TAB) - HVAC Systems Testing, Adjusting and Balancing.

1.04 SUBMITTALS

A. See Section 013000 - Administrative Requirements, for submittal procedures.

B. Installer Qualifications: Submit name of adjusting and balancing agency and TAB supervisor for approval within 30 days after award of Contract.

C. Control System Coordination Reports: Communicate in writing to the controls installer all setpoint and parameter changes made or problems and discrepancies identified during TAB that affect, or could affect, the control system setup and operation.

D. Final Report: Indicate deficiencies in systems that would prevent proper testing, adjusting, and balancing of systems and equipment to achieve specified performance.
   1. Submit under provisions of Section 014000.
   2. Include actual instrument list, with manufacturer name, serial number, and date of calibration.
   3. Form of Test Reports: Where the TAB standard being followed recommends a report format use that; otherwise, follow ASHRAE Std 111.
   4. Units of Measure: Report data in both I-P (inch-pound) and SI (metric) units.
   5. Include the following on the title page of each report:
      a. Name of Testing, Adjusting, and Balancing Agency.
      b. Address of Testing, Adjusting, and Balancing Agency.
      c. Telephone number of Testing, Adjusting, and Balancing Agency.
      d. Project name and owner project number.
      e. Project location.
      f. Project Architect.
      g. Project Engineer.
      h. Project Contractor.
      i. Project altitude.
      j. Report date.

PART 2 PRODUCTS - NOT USED

PART 3 EXECUTION

3.01 GENERAL REQUIREMENTS

A. Perform total system balance in accordance with one of the following:
   1. NEBB Procedural Standards for Testing Adjusting Balancing of Environmental Systems.

2. SMACNA (TAB).
3. Maintain at least one copy of the standard to be used at project site at all times.

B. Begin work after completion of systems to be tested, adjusted, or balanced and complete work prior to Substantial Completion of the project.

C. TAB Agency Qualifications:
1. Company specializing in the testing, adjusting, and balancing of systems specified in this section.
2. Having minimum of three years documented experience.
3. Certified by one of the following:
a. AABC, Associated Air Balance Council: www.aabc.com/#sle; upon completion submit AABC National Performance Guaranty.
b. NEAABC BB, National Environmental Balancing Bureau: www.nebb.org/#sle.
c. TABB, The Testing, Adjusting, and Balancing Bureau of National Energy Management Institute: www.tabbcertified.org/#sle.

D. TAB Supervisor and Technician Qualifications: Certified by same organization as TAB agency.

3.02 EXAMINATION

A. Verify that systems are complete and operable before commencing work. Ensure the following conditions:
1. Systems are started and operating in a safe and normal condition.
2. Temperature control systems are installed complete and operable.
3. Proper thermal overload protection is in place for electrical equipment.
4. Duct systems are clean of debris.
5. Fans are rotating correctly.
6. Fire and volume dampers are in place and open.
7. Access doors are closed and duct end caps are in place.
8. Duct system leakage is minimized.

B. Submit field reports. Report defects and deficiencies that will or could prevent proper system balance.

C. Beginning of work means acceptance of existing conditions.

3.03 PREPARATION

A. Provide instruments required for testing, adjusting, and balancing operations. Make instruments available to Architect to facilitate spot checks during testing.

B. Provide additional balancing devices as required.

3.04 ADJUSTMENT TOLERANCES

A. Air Handling Systems: Adjust to within plus or minus 5 percent of design for supply systems and plus or minus 10 percent of design for return and exhaust systems.

B. Hydronic Systems: Adjust to within plus or minus 10 percent of design.

3.05 RECORDING AND ADJUSTING

A. Field Logs: Maintain written logs including:
1. Running log of events and issues.
2. Discrepancies, deficient or uncompleted work by others.
3. Contract interpretation requests.
4. Lists of completed tests.

B. Ensure recorded data represents actual measured or observed conditions.

C. Permanently mark settings of valves, dampers, and other adjustment devices allowing settings to be restored. Set and lock memory stops.

D. Mark on drawings the locations where traverse and other critical measurements were taken and cross reference the location in the final report.

E. After adjustment, take measurements to verify balance has not been disrupted or that such disruption has been rectified.

F. Leave systems in proper working order, replacing belt guards, closing access doors, closing doors to electrical switch boxes, and restoring thermostats to specified settings.

3.06 AIR SYSTEM PROCEDURE (AS APPLICABLE TO THE PROJECT)

A. Adjust air handling and distribution systems to provide required or design supply, return, and exhaust air quantities at site altitude.

B. Make air quantity measurements in ducts by Pitot tube traverse of entire cross sectional area of duct.

C. Measure air quantities at air inlets and outlets.

D. Adjust distribution system to obtain uniform space temperatures free from objectionable drafts and noise.

E. Use volume control devices to regulate air quantities only to extend that adjustments do not create objectionable air motion or sound levels. Effect volume control by duct internal devices such as dampers and splitters.

F. Vary total system air quantities by adjustment of fan speeds. Provide drive changes required. Vary branch air quantities by damper regulation.

G. Provide system schematic with required and actual air quantities recorded at each outlet or inlet.

H. Measure temperature conditions across outside air, return air, and exhaust dampers to check leakage.

I. For variable air volume system powered units set volume controller to air flow setting indicated. Confirm connections properly made and confirm proper operation for automatic variable air volume temperature control.

3.07 SCOPE

A. Test of existing prior to commencement of demolition.
   1. As specified on drawings.

B. Test, adjust, and balance the following:
   1. Air Inlets and Outlets.

C. See drawing for additional information and requirement.

3.08 MINIMUM DATA TO BE REPORTED

A. Exhaust Fans:
   1. Location.
   2. Manufacturer.
   3. Model number.
   4. Serial number.
   5. Air flow, specified and actual.
   6. Total static pressure (total external), specified and actual.
   7. Inlet pressure.
   8. Discharge pressure.
   9. Sheave Make/Size/Bore.
   10. Number of Belts/Make/Size.
   11. Fan RPM.

END OF SECTION 230593

SECTION 230923
DIRECT-DIGITAL CONTROL SYSTEM FOR HVAC

PART 1 GENERAL

1.01 SECTION INCLUDES

1.02 RELATED REQUIREMENTS

A. Section 230913 - Instrumentation and Control Devices for HVAC.

B. Section 230993 - Sequence of Operations for HVAC Controls.

C. Section 260583 - Wiring Connections: Electrical characteristics and wiring connections.

1.03 REFERENCE STANDARDS

A. ANSI/CEA 709.1.D - Control Network Protocol Specification.

B. ASHRAE Std 135 - BACnet - A Data Communication Protocol for Building Automation and Control Networks.

C. NFPA 70 - National Electrical Code.

D. UL (DIR) - Online Certifications Directory.

1.04 COODINATION REQUIREMENTS

A. Coordinate with HVAC equipment supplier and system field installer to clarly identify the following components to ensure the entire system meets the design intent:
   1. Interface requirment for HVAC equipment factory provided controllers.
   2. HVAC equipment factory supplied and installed control components.
   3. HVAC equipment factory installed control components.
   4. Field installed components.

1.05 SUBMITTALS

A. See Section 013000 - Administrative Requirements for submittal procedures.

B. Product Data and Shop Drawing: Provide data and shop drawingfor each system hardware, software module and equipment to be installed or provided.
   1. DDC System Hardware
      a. A complete bill of materials to be used indicating quantity, manufacturer, model number, and relevant technical data of equipment to be used.
      b. Manufacturer’s description and technical data such as performance curves, product specifications, and installation and maintenance instructions for items listed below and for relevant items not listed below:
         1) Direct digital controllers (controller panels)
         2) Control panels
         3) Power supplies
         4) Batteries
         5) Operator interface equipment
         6) Wiring
      c. Wiring diagrams and layouts for each control panel. Show termination numbers.
      d. Schematic diagrams for all field sensors and controllers. Provide floor plans of all sensor locations and control hardware. Riser diagrams
   2. Quantities of items submitted shall be reviewed but are the responsibility of the Contractor.
   3. BACnet Protocol Implementation Conformance Statement (PICS) for each submitted type of controller and operator interface.

C. Manufacturer's Instructions: Indicate manufacturer's installation instructions for all manufactured components.

D. Project Record Documents: Record actual locations of control components, including control units, thermostats, and sensors.
   1. Revise shop drawings to reflect actual installation and operating sequences.
   2. Include submittals data in final "Record Documents" form.

E. Operation and Maintenance Data:
   1. Include interconnection wiring diagrams complete field installed systems with identified and numbered, system components and devices.
   2. Include keyboard illustrations and step-by-step procedures indexed for each operator function.
   3. Include inspection period, cleaning methods, cleaning materials recommended, and calibration tolerances.

1.06 QUALITY ASSURANCE

A. Perform work in accordance with NFPA 70.

B. Products Requiring Electrical Connection: Listed and classified by UL (DIR) as suitable for purpose specified and indicated.

1.07 OWNERSHIP OF PROPRIETARY MATERIAL

A. Project-specific software and documentation shall become Owner's property. This includes, but is not limited to:
   1. Graphics
   2. Record drawings
   3. Database
   4. Application programming code; software.
   5. Documentation

1.08 DEFINITION

A. BACnet Interoperability Building Blocks (BIBB): A BIBB defines a small portion of BACnet functionality that is needed to perform a particular task. BIBBS are combined to build the BACnet functional requirements for a device in a specification.

B. BACnet/BACnet Standard: BACnet communication requirements as defined by the latest version of ASHRAE/ANSI 135 and approved addenda.

C. Control Systems Server: A computer(s) that maintain(s) the systems configuration and programming database.

D. Controller: Intelligent stand-alone control device. Controller is a generic reference to building controllers, custom application controllers, and application specific controllers.

E. Direct Digital Control: Microprocessor-based control including Analog/Digital conversion and program logic.

F. Gateway: Bi-directional protocol translator connecting control systems that use different communication protocols.

G. Local Area Network: Computer or control system communications network limited to local building or campus.

H. Master-Slave/Token Passing: Data link protocol as defined by the BACnet standard.

I. Point-to-Point Serial communication as defined in the BACnet standard.

J. Primary Controlling LAN: High speed, peer-to-peer controller LAN connecting BCs and optionally AACs and ASCs. Refer to System Architecture below.

K. Protocol Implementation Conformance Statement: A written document that identifies the particular options specified by BACnet that are implemented in a device.

L. Router: A device that connects two or more networks at the network layer.

M. Wiring: Raceway, fittings, wire, boxes and related items.

PART 2 PRODUCTS

2.01 MANUFACTURERS

A. Local Representative: ACES, Justin Vogt, (314) 722-2727; jmvogt@automaticcontrols.net.

B. Substitutions: See Section 016000 - Product Requirements.

2.02 SYSTEM PERFORMANCE

A. Performance Standards. System shall conform to the following minimum standards over network connections. Systems shall be tested using manufacturer's recommended hardware and software for operator workstation (server and browser for web-based systems).

1. Graphic Display. A graphic with 20 dynamic points shall display with current data within 10 sec.
2. Graphic Refresh. A graphic with 20 dynamic points shall update with current data within 8 sec.and shall automatically refresh every 15 sec.
3. Configuration and Tuning Screens. Screens used for configuring, calibrating, or tuning points, PID loops, and similar control logic shall automatically refresh within 6 sec.
4. Object Command. Devices shall react to command of a binary object within 2 sec. Devices shall begin reacting to command of an analog object within 2 sec.
5. Alarm Response Time. An object that goes into alarm shall be annunciated at the workstation within 45 sec.
6. Program Execution Frequency. Custom and standard applications shall be capable of running as often as once every 5 sec. Select execution times consistent with the mechanical process under control.
7. Performance. Programmable controllers shall be able to completely execute DDC PID control loops at a frequency adjustable down to once per sec. Select execution times consistent with the mechanical process under control.
8. Multiple Alarm Annunciation. Each workstation on the network shall receive alarms within 5 sec of other workstations.

2.03 MATERIALS

A. Use new products the manufacturer is currently manufacturing and selling for use in new installations. Do not use this installation as a product test site unless explicitly approved in writing by Owner. Spare parts shall be available for at least five years after completion of this contract.

2.04 COMMUNICATION

A. Control products, communication media, connectors, repeaters, hubs, and routers shall comprise a BACnet internetwork. Controller and operator interface communication shall conform to ANSI/ASHRAE Standard 135, BACnet.

B. Install new wiring and network devices as required to provide a complete and workable control network.

C. Use existing Ethernet backbone for network segments marked "existing" on project drawings.

D. Each controller shall have a communication port for temporary connection to a laptop computer or other operator interface. Connection shall support memory downloads and other commissioning and troubleshooting operations.

E. Internetwork operator interface and value passing shall be transparent to internetwork architecture.

1. An operator interface connected to a controller shall allow the operator to interface with each internetwork controller as if directly connected. Controller information such as data, status, and control algorithms shall be viewable and editable from each internetwork controller.

2. Inputs, outputs, and control variables used to integrate control strategies across multiple controllers shall be readable by each controller on the internetwork. Program and test all cross-controller links required to execute control strategies specified in Section 23 09 93. An authorized operator shall be able to edit cross-controller links by typing a standard object address or by using a point-and-click interface.

F. Workstations, Building Control Panels, and Controllers with real-time clocks shall use the BACnet Time Synchronization service. System shall automatically synchronize system clocks daily from an operator-designated device via the internetwork. The system shall automatically adjust for daylight saving and standard time as applicable.

G. System shall be expandable to at least twice the required input and output objects with additional controllers, associated devices, and wiring.

H. System shall support Web services data exchange with any other system that complies with XML (extensible markup language) and SOAP (simple object access protocol) standards specified by the Web Services Interoperability Organization(WS-I) Basic Profile 1.0 or higher. Web services support shall as a minimum be provided at the workstation or web server level and shall enable data to be read from or written to the system.
   1. System shall support Web services read data requests by retrieving requested trend data or point values (I/O hardware points, analog value software points, or binary value software points) from any system controller or from the trend history database.
   2. System shall support Web services write data request to each analog and binary object that can be edited through the system operator interface by downloading a numeric value to the specified object.
   3. For read or write requests, the system shall require user name and password authentication and shall support SSL (Secure Socket Layer) or equivalent data encryption.
   4. System shall support discovery through a Web services connection or shall provide a tool available through the Operator Interface that will reveal the path/identifier needed to allow a third party Web services device to read data from or write data to any object in the system which supports this service.

2.05 CONTROLLERS

A. General:
   1. Provide an adequate number of the following as required to achieve performance specified in Section 23 09 23 Article 2.03 (System Performance):
      a. Building Controllers (BC)
      b. Advanced Application Controllers (AAC)
      c. Application Specific Controllers (ASC)
      d. Smart Actuators (SA)
      e. Smart Sensors (SS)
   2. Every device in the system which executes control logic and directly controls HVAC equipment must conform to a standard BACnet Device profile as specified in ANSI/ASHRAE 135, BACnet Annex L.

B. BACnet.
   1. BCs: Each BC shall conform to BACnet Building Controller (B-BC) device profile as specified in ANSI/ASHRAE 135, BACnet Annex L, and shall be listed as a certified B-BC in the BACnet Testing Laboratories (BTL) Product Listing.
   2. AACs: Each AAC shall conform to BACnet Advanced Application Controller (B-AAC) device profile as specified in ANSI/ASHRAE 135, BACnet Annex L and shall be listed as a certified B-AAC in the BTL Product Listing.
   3. ASCs: Each ASC shall conform to BACnet Application Specific Controller (B-ASC) device profile as specified in ANSI/ASHRAE 135, BACnet Annex L and shall be listed as a certified B-ASC in the BTL Product Listing.

4. SSs: Each SS shall conform to BACnet Smart Sensor (B-SS) device profile as specified in ANSI/ASHRAE 135, BACnet Annex L and shall be listed as a certified B-SS in the BTL Product Listing.
5. BACnet Communication.
    a. Each BC shall reside on or be connected to a BACnet network using ISO 8802-3 (Ethernet) Data Link/Physical layer protocol and BACnet/IP addressing.
    b. BACnet routing shall be performed by BCs or other BACnet device routers as necessary to connect BCs to networks of AACs and ASCs.
    c. Each AAC shall reside on a BACnet network using ISO 8802-3 (Ethernet) Data Link/Physical layer protocol with BACnet/IP addressing, or it shall reside on a BACnet network using the ARCNET or MS/TP Data Link/Physical layer protocol.
    d. Each ASC shall reside on a BACnet network using the ARCNET or MS/TP Data Link/Physical layer protocol.
    e. Each SA shall reside on a BACnet network using the ARCNET or MS/TP Data Link/Physical layer protocol.
    f. Each SS shall reside on a BACnet network using ISO 8802-3 (Ethernet) Data Link/Physical layer protocol with BACnet/IP addressing, or it shall reside on a BACnet network using ARCNET or MS/TP Data Link/Physical layer protocol.

C. Communication:
1. Service Port:
    a. Each controller shall provide a service communication port for connection to a Portable Operator's Terminal.
        1) Connection shall be extended to space temperature sensor ports where shown on drawings.
2. Signal Management:
    a. BC and ASC operating systems shall manage input and output communication signals to allow distributed controllers to share real and virtual object information and to allow for central monitoring and alarms.
3. Data Sharing:
    a. Each BC and AAC shall share data as required with each networked BC and AAC.
4. Stand-Alone Operation:
    a. Each piece of equipment specified in Section 23 09 93 shall be controlled by a single controller to provide stand-alone control in the event of communication failure.
    b. All I/O points specified for a piece of equipment shall be integral to its controller. Provide stable and reliable stand-alone control using default values or other method for values normally read over the network such as outdoor air conditions, supply air or water temperature coming from source equipment, etc.

D. Environment:
1. Controller hardware shall be suitable for anticipated ambient conditions:
    a. Controllers used outdoors or in wet ambient conditions shall be mounted in waterproof enclosures and shall be rated for operation at -20°F to 140°F.
    b. Controllers used in conditioned space shall be mounted in dust-protective enclosures and shall be rated for operation at 32°F to 120°F.

E. Keypad and Display:
1. Provide a local keypad and display for each BC and AAC
2. Use for interrogating and editing data.
3. System security password prevents unauthorized use.

F. Real-Time Clock:
1. Controllers that perform scheduling shall have a real-time clock.

G. Serviceability:
1. Diagnostic LEDs for power, communication, and processor.

2. Make all wiring connections to field removable, modular terminal strips, or to a termination card connected by a ribbon cable.
3. Each BC and AAC shall continually check its processor and memory circuit status and shall generate an alarm on abnormal operation.
4. System shall continuously check controller network and generate alarm for each controller that fails to respond.

H. Memory:
1. Controller memory shall support operating system, database, and programming requirements.
2. Each BC and AAC shall retain BIOS and application programming for at least 72 hours in the event of power loss.
3. Each ASC and SA shall use nonvolatile memory and shall retain BIOS and application programming in the event of power loss. System shall automatically download dynamic control parameters following power loss.

I. Immunity to Power and Noise:
1. Maintain operation at 90 to 110 percent of nominal voltage rating.
2. Perform orderly shutdown below 80 percent of nominal voltage.
3. Operation protected against electrical noise of 5 to 120 Hz and from keyed radios up to 5 W. at 3 feet.

J. Transformer:
1. ASC power supply shall be fused or current limiting and shall be rated at a minimum of 125% of ASC power consumption.

2.06 INPUT AND OUTPUT INTERFACE

A. General:
1. Hard-wire input and output points to BCs, AACs, ASCs, or SAs.

B. Protection:
1. All input points and output points shall be protected such that shorting of the point to itself, to another point, or to ground shall cause no damage to the controller.
2. All input and output points shall be protected from voltage up to 24 V of any duration, such that contact with this voltage will cause no controller damage.

C. Binary Inputs.
1. Allow the monitoring of ON/OFF signals from remote devices.
2. Provide a wetting current of at least 12 mA to be compatible with commonly available control devices and shall be protected against contact bounce and noise.
3. Sense dry contact closure without application of power external to the controller.

D. Pulse Accumulation Inputs:
1. Conform to binary input requirements and shall also accumulate up to 10 pulses per second.

E. Analog Inputs:
1. Allow for monitoring low-voltage (0-10 Vdc), current (4-20 mA), or resistance (thermistor or RTD) signals.
2. Compatible with and field configurable to commonly available sensing devices.

F. Binary Outputs:
1. Used for On/Off operation or a pulsed low-voltage signal for pulse width modulation control.
2. On building Controllers, outputs provided with three position (On/Off/Auto) override switches.
3. Status lights for BCs and AACs to be selectable for normally open or normally closed operation.

G. Analog Outputs:

1. Analog outputs shall not drift more than 0.4% of range annually.
2. Monitoring signal provides a 0 to 10 VDC or a 4 to 20 mA output signal for end device control.
3. Each BC and AAC analog output shall have a two-position (auto-manual) switch, a manually adjustable potentiometer for manual override, and status lights.
4. Drift to not exceed 0.4 percent of range per year.

H. Tri-State Outputs:
1. Coordinate two binary outputs to control three point, floating type, electronic actuators without feedback.
2. Limit the use of three point, floating devices to the following zone and terminal unit control applications:
   a. VAV terminal units.
   b. Duct mounted heating coils.
   c. Zone dampers.
   d. Radiation.
3. Control algorithms run the zone actuator to one end of its stroke once every 24 hours for verification of operator tracking.

I. System Object Capacity:
1. System size to be expandable to at keast twice the number of input / output objects required providing additional controllers, including associated devices and wiring as necessary to achieve this capacity requirement.
2. Hardware additions or software revisions for the installed operator interfaces are not to be required for future, system expansions.

2.07 AUXILIARY CONTROL DEVICES

A. Refer to Section 230913 - Instrumentation and Control Devices

2.08 WIRING AND RACEWAYS

A. General. Provide copper wiring, plenum cable, and raceways as specified in applicable sections of Division 26.

B. Insulated wire shall use copper conductors and shall be UL listed for 200°F minimum service.

2.09 FIBER OPTIC CABLE SYSTEM

A. Optical Cable. Optical cables shall be duplex 900 mm tight-buffer construction designed for intra-building environments. Sheath shall be UL listed OFNP in accordance with NEC Article 770. Optical fiber shall meet the requirements of FDDI, ANSI X3T9.5 PMD for 62.5/125mm.

B. Connectors. Field terminate optical fibers with ST type connectors. Connectors shall have ceramic ferrules and metal bayonet latching bodies.

PART 3 EXECUTION

3.01 INSTALLERS

A. Installer List:
1. Automatic Controls Equipment Systems, Inc.http://www.automaticcontrols.net
2. Contact: Justin Vogt at 314-722-2972 or Robert Vogt at 314.722.2971

B. Substitution Limitations: Same as specified for products; see Section 016000 - Product Requirements.

3.02 EXAMINATION

A. Verify existing conditions before starting work.

B. Verify that conditioned power supply is available to the control units and to the operator work station. Verify that field end devices, wiring installed prior to installation proceeding.

C. Examine the drawings and specifications for other parts of the work. If head room or space conditions appear inadequatem, or if any discrepancies occur between the plans and the contractor's work and the plans and the work of others, report these discrepancies to the Owner and shall obtain written instructions for any changes necessary to accommodate the contractor's work with the work of others. Any changes in the work covered by this specification made necessary by the failure or neglect of the contractor to report such discrepancies shall be made by and at the expense of the contractor.

3.03 PROTECTION

A. The contractor shall protect all work and material from damage by his/her work or employees and shall be liable for all damage thus caused.

B. The contractor shall be responsible for his/her work and equipment until finally inspected, tested, and accepted. The contractor shall protect any material that is not immediately installed. The contractor shall close all open ends of work with temporary covers or plugs during storage and construction to prevent entry of foreign objects.

3.04 COORDINATION

A. Site
   1. Where the mechanical work will be installed in close proximity to, or will interfere with, work of other trades, the contractor shall assist in working out space conditions to make a satisfactory adjustment. If the contractor installs his/her work before coordinating with other trades, so as to cause any interference with work of other trades, the contractor shall make the necessary changes in his/her work to correct the condition without extra charge.
   2. Coordinate and schedule work with other work in the same area and with work dependent upon other work to facilitate mutual progress.

B. Submittals. See Section 23 09 23 Article 1.10 (Submittals).

C. Test and Balance.
   1. Provide a qualified technician to assist in the test and balance process.

D. Life Safety (By Others).
   1. Duct smoke detectors required for air handler shutdown are provided and controled under Division 28.
   2. Smoke dampers and actuators required for duct smoke isolation are provided under Division 23 and are controled under Division 28.
   3. Fire and smoke dampers and actuators required for fire-rated walls are provided under Division 23. Fire and smoke damper control is provided under Division 28.

E. Coordination with controls specified in other sections or divisions. Other sections and/or divisions of this specification include controls and control devices that are to be part of or interfaced to the control system specified in this section. These controls shall be integrated into the system and coordinated by the contractor as follows:
   1. All communication media and equipment shall be provided as specified in Section 23 09 23 Article 2.2 (Communication).
   2. Each supplier of a controls product is responsible for the configuration, programming, start up, and testing of that product to meet the sequences of operation described in Section 23 09 93.
   3. The contractor shall coordinate and resolve any incompatibility issues that arise between control products provided under this section and those provided under other sections or divisions of this specification.
   4. The contractor is responsible for providing all controls described in the contract documents regardless of where within the contract documents these controls are described.
   5. The contractor is responsible for the interface of control products provided by multiple suppliers regardless of where this interface is described within the contract documents.

3.05 GENERAL WORKMANSHIP

A. Install equipment, piping, and wiring/raceway parallel to building lines (i.e. horizontal, vertical, and parallel to walls) wherever possible.

B. Provide sufficient slack and flexible connections to allow for vibration of piping and equipment.

C. Install equipment in readily accessible locations as defined by Chapter 1 Article 100 Part A of the National Electrical Code (NEC).

D. Verify integrity of all wiring to ensure continuity and freedom from shorts and grounds.

E. All equipment, installation, and wiring shall comply with industry specifications and standards for performance, reliability, and compatibility and be executed in strict adherence to local codes and standard practices.

3.06 FIELD QUALITY CONTROL

A. All work, materials, and equipment shall comply with rules and regulations of applicable local, state, and federal codes and ordinances as identified in Section 23 09 23 Article 1.8 (Codes and Standards).

B. Contractor shall continually monitor the field installation for code compliance and quality of workmanship.

C. Contractor shall have work inspection by local and/or state authorities having jurisdiction over the work.

3.07 EXISTING EQUIPMENT

A. Wiring. Interconnecting control wiring shall be removed and shall become the property of the contractor unless specifically noted or shown to be reused.

B. Local Control Panels. Remove and deliver existing control panels to Owner.

C. Repair. Unless otherwise directed, the contractor is not responsible for repair or replacement of existing energy equipment and systems, valves, dampers, or actuators. Should the contractor find existing equipment that requires maintenance, the engineer is to be notified immediately.

D. Indicator Gauges. Where these devices remain and are not removed, they must be made operational and recalibrated to ensure reasonable accuracy.

E. Room Thermostats. Remove and deliver existing room thermostats to Owner unless otherwise noted. Patch and finish holes and marks left by removal to match existing walls.

F. Electronic Sensors and Transmitters. Remove and deliver existing sensors and transmitters to Owner.

G. Controllers and Auxiliary Electronic Devices. Remove and deliver existing controllers and auxiliary electronic devices to Owner.

H. Damper Actuators, Linkages, and Appurtenances. Remove and deliver existing damper actuators, linkages and appurtenances to Owner.

I. Control Valves. Replace existing control valves with new. Deliver removed control valves to Owner.

J. Control Compressed Air Systems. Replace existing control compressed air systems with new unless otherwise noted. Deliver removed systems to Owner.

K. Existing System Operating Schedule. Existing mechanical system may be disabled during this work.

L. The scheduling of fans through existing or temporary time clocks or control system shall be maintained throughout the DDC system installation

M. Install control panels where shown.

N. Modify existing starter control circuits, if necessary, to provide hand-off-auto control of each controlled starter. If new starters or starter control packages are required, these shall be included as part of this contract.

O. Patch holes and finish to match existing walls.

3.08 WIRING

A. All control and interlock wiring shall comply with national and local electrical codes, and Division 26 of this specification, Where the requirements of this section differ from Division 26, the requirements of this section shall take precedence.

B. All NEC Class 1 (line voltage) wiring shall be UL listed in approved raceway according to NEC and Division 26 requirements.

C. All low-voltage wiring shall meet NEC Class 2 requirements. Low-voltage power circuits shall be subfused when required to meet Class 2 current limit.

D. Where NEC Class 2 (current-limited) wires are in concealed and accessible locations, including ceiling return air plenums, approved cables not in raceway may be used provided that cables are UL listed for the intended application.

E. All wiring in mechanical, electrical, or service rooms - or where subject to mechanical damage - shall be installed in raceway at levels below 3 m (10ft).

F. Do not install Class 2 wiring in raceways containing Class 1 wiring. Boxes and panels containing high-voltage wiring and equipment may not be used for low-voltage wiring except for the purpose of interfacing the two (e.g. relays and transformers).

G. Do not install wiring in raceway containing tubing.

H. Where Class 2 wiring is run exposed, wiring is to be run parallel along a surface or perpendicular to it and neatly tied at 3 m (10 ft) intervals.

I. Where plenum cables are used without raceway, they shall be supported from or anchored to structural members. Cables shall not be supported by or anchored to ductwork, electrical raceways, piping, or ceiling suspension systems.

J. All wire-to-device connections shall be made at a terminal block or terminal strip. All wire-to-wire connections shall be at a terminal block.

K. All wiring within enclosures shall be neatly bundled and anchored to permit access and prevent restriction to devices and terminals.

L. Maximum allowable voltage for control wiring shall be 120 V. If only higher voltages are available, the contractor shall provide step-down transformers.

M. All wiring shall be installed as continuous lengths, with no splices permitted between termination points.

N. Install plenum wiring in sleeves where it passes through walls and floors. Maintain fire rating at all penetrations.

O. Size of raceway and size and type of wire type shall be the responsibility of the contractor in keeping with the manufacturer’s recommendations and NEC requirements, except as noted elsewhere.

P. Include one pull string in each raceway 2.5 cm (1 in.) or larger.

Q. Use color-coded conductors throughout with conductors of different colors.

R. Control and status relays are to be located in designated enclosures only. These enclosures include packaged equipment control panel enclosures unless they also contain Class 1 starters.

S. Conceal all raceways except within mechanical, electrical, or service rooms. Install raceway to maintain a minimum clearance of 15 cm (6 in.) from high-temperature equipment (e.g. steam pipes or flues).

T. Secure raceways with raceway clamps fastened to the structure and spaced according to code requirements. Raceways and pull boxes may not be hung on flexible duct strap or tie rods. Raceways may not be run on or attached to ductwork.

U. Adhere to this specification's Division 26 requirements where raceway crosses building expansion joints.

V. Install insulated bushings on all raceway ends and openings to enclosures. Seal top end of vertical raceways.

W. The contractor shall terminate all control and/or interlock wiring and shall maintain updated (as-built) wiring diagrams with terminations identified at the job site.

X. Flexible metal raceways and liquid-tight flexible metal raceways shall not exceed 1 m (3 ft) in length and shall be supported at each end. Flexible metal raceway less than ½ in. electrical trade size shall not be used. In areas exposed to moisture, including chiller and boiler rooms, liquid-tight, flexible metal raceways shall be used.

Y. Raceway must be rigidly installed, adequately supported, properly reamed at both ends, and left clean and free of obstructions. Raceway sections shall be joined with couplings (according to code). Terminations must be made with fittings at boxes, and ends not terminating in boxes shall have bushings installed.

3.09 COMMUNICATION WIRING

A. The contractor shall adhere to the items listed in the "Wiring" article in Part 3 of the specification.

B. All cabling shall be installed in a neat and workmanlike manner. Follow manufacturer's installation recommendations for all communication cabling

C. Do not install communication wiring in raceways and enclosures containing Class 1 or other Class 2 wiring.

D. Maximum pulling, tension, and bend radius for the cable installation, as specified by the cable manufacturer, shall not be exceeded during installation.

E. Contractor shall verify the integrity of the entire network following cable installation. Use appropriate test measures for each particular cable.

F. When a cable enters or exits a building, a lightning arrestor must be installed between the lines and ground. The lighting arrestor shall be installed according to manufacturer’s instructions.

G. All runs of communication wiring shall be unspliced length when that length is commercially available.

H. All communication wiring shall be labeled to indicate origination and destination data.

I. Grounding of coaxial cable shall be in accordance with NEC regulations article on "Communications Circuits, Cable, and Protector Grounding."

J. BACnet MS/TP communications wiring shall be installed in accordance with ASHRAE/ANSI Standard 135. This includes but is not limited to:
   1. The network shall use shielded, twisted-pair cable with characteristic impedance between 100 and 120 ohms. Distributed capacitance between conductors shall be less than 100 pF per meter (30 pF per foot.)
   2. The maximum length of an MS/TP segment is 1200 meters (4000 ft) with AWG 18 cable. The use of greater distances and/or different wire gauges shall comply with the electrical specifications of EIA-485.
   3. The maximum number of nodes per segment shall be 32, as specified in the EIA 485 standard. Additional nodes may be accommodated by the use of repeaters.
   4. An MS/TP EIA-485 network shall have no T connections.

3.10 FIBER OPTIC CABLE

A. Maximum pulling tensions as specified by the cable manufacturer shall not be exceeded during installation. Post-installation residual cable tension shall be within cable manufacturer's specifications.

B. All cabling and associated components shall be installed in accordance with manufacturers' instructions. Minimum cable and unjacketed fiber bend radii, as specified by cable manufacturer, shall be maintained.

3.11 INSTALLATION

A. Install control units and other hardware in position on permanent walls where not subject to excessive vibration.

B. Install software in control units and in operator work station. Implement all features of programs to specified requirements and appropriate to sequence of operation. Refer to Section 230993.

C. Provide with 120v AC, 15 amp dedicated emergency power circuit to each programmable control unit.

D. Provide conduit and electrical wiring in accordance with Section 260583. Electrical material and installation shall be in accordance with appropriate requirements of .

3.12 MANUFACTURER'S FIELD SERVICES

A. Start and commission systems. Allow sufficient time for start-up and commissioning prior to placing control systems in permanent operation.

3.13 WARNING LABELS

A. Permanent warning labels shall be affixed to all equipment that can be automatically started by the control system.
   1. Labels shall use white lettering (12-point type or larger) on a red background.
   2. Warning labels shall read as follows.

C A U T I O N

THIS EQUIPMENT IS OPERATING UNDER AUTOMATIC CONTROL AND MAY START OR STOP AT ANY TIME WITHOUT WARNING. SWITCH DISCONNECT TO"OFF"POSITION BEFORE SERVICING.

B. Permanent warning labels shall be affixed to all motor starters and control panels that are connected to multiple power sources utilizing separate disconnects.
   1. Labels shall use white lettering (12-point type or larger) on a red background.
   2. Warning labels shall read as follows.

C A U T I O N

THIS EQUIPMENT IS FED FROM MORE THAN ONE POWER SOURCE WITH SEPARATE DISCONNECTS. DISCONNECT ALL POWER SOURCES BEFORE SERVICING.

3.14 IDENTIFICATION OF HARDWARE AND WIRING

A. All wiring and cabling, including that within factory-fabricated panels shall be labeled at each end within 5 cm (2 in.) of termination with control system address or termination number.

B. All pneumatic tubing shall be labeled at each end within 5 cm (2 in.) of termination with a descriptive identifier.

C. Permanently label or code each point of field terminal strips to show the instrument or item served.

D. Identify control panels with minimum 1 cm (½ in.) letters on laminated plastic nameplates.

E. Identify all other control components with permanent labels. All plug-in components shall be labeled such that label removal of the component does not remove the label.

F. Identify room sensors related to terminal boxes or valves with nameplates.

G. Manufacturers' nameplates and UL or CSA labels shall be visible and legible after equipment is installed.

H. Identifiers shall match record documents.

3.15 CONTROLLERS

A. Provide a separate controller for each AHU or other HVAC system. A DDC controller may control more than one system provided that all points associated with the system are assigned to the same DDC controller. Points used for control loop reset, such as outside air or space temperature, are exempt from this requirement.

B. Building Controllers and Custom Application Controllers shall be selected to provide the required I/O point capacity required to monitor all of the hardware points listed in Section 23 09 93 (Sequences of Operation).

3.16 PROGRAMMING

A. Provide sufficient internal memory for the specified sequences of operation and trend logging.

B. Point Naming. Name points as shown on the equipment points list provided with each sequence of operation. See Section 23 09 93 (Sequences of Operation). If character limitations or space restrictions make it advisable to shorten the name, the abbreviations given in Appendix B to Section 23 09 93 may be used. Where multiple points with the same name reside in the same controller, each point name may be customized with its associated Program Object number. For example, "Zone Temp 1" for Zone 1, "Zone Temp 2" for Zone 2.

C. Software Programming.
   1. Provide programming for the system and adhere to the sequences of operation provided. All other system programming necessary for the operation of the system, but not specified in this document, also shall be provided by the contractor. Embed into the control program sufficient comment statements to clearly describe each section of the program. The comment statements shall reflect the language used in the sequences of operation. Use the appropriate technique based on the following programming types:
      a. Text-based:
         1) Must provide actions for all possible situations
         2) Must be modular and structured
         3) Must be commented
      b. Graphic-based:
         1) Must provide actions for all possible situations
         2) Must be documented
      c. Parameter-based:
         1) Must provide actions for all possible situations
         2) Must be documented.

D. Operator Interface.
   1. Standard Graphics. Provide graphics for all mechanical systems and floor plans of the building. This includes each chilled water system, hot water system, chiller, boiler, air handler, and all terminal equipment. Point information on the graphic displays shall dynamically update. Show on each graphic all input and output points for the system. Also show relevant calculated points such as setpoints. As a minimum, show on each equipment graphic the input and output points and relevant calculated points as indicated on the applicable Points List in Section 23 09 93.
   2. The contractor shall provide all the labor necessary to install, initialize, start up, and troubleshoot all operator interface software and its functions as described in this section. This includes any operating system software, the operator interface database, and any third-party software installation and integration required for successful operation of the operator interface.

3.17 CONTROL SYSTEM CHECKOUT AND TESTING

A. Startup Testing. All testing listed in this article shall be performed by the contractor and shall make up part of the necessary verification of an operating control system. This testing shall be completed before the owner’s representative is notified of the system demonstration.

1. The contractor shall furnish all labor and test apparatus required to calibrate and prepare for service of all instruments, controls, and accessory equipment furnished under this specification.
2. Verify that all control wiring is properly connected and free of all shorts and ground faults. Verify that terminations are tight.
3. Enable the control systems and verify calibration of all input devices individually. Perform calibration procedures according to manufacturers' recommendations.
4. Verify that all binary output devices (relays, solenoid valves, two-position actuators and control valves, magnetic starters, etc.) operate properly and that the normal positions are correct.
5. Verify that all analog output devices (I/Ps, actuators, etc.) are functional, that start and span are correct, and that direction and normal positions are correct. The contractor shall check all control valves and automatic dampers to ensure proper action and closure. The contractor shall make any necessary adjustments to valve stem and damper blade travel.
6. Verify that the system operation adheres to the sequences of operation. Simulate and observe all modes of operation by overriding and varying inputs and schedules. Tune all DDC loops.
7. Alarms and Interlocks:
    a. Check each alarm separately by including an appropriate signal at a value that will trip the alarm.
    b. Interlocks shall be tripped using field contacts to check the logic, as well as to ensure that the fail-safe condition for all actuators is in the proper direction.
    c. Interlock actions shall be tested by simulating alarm conditions to check the initiating value of the variable and interlock action

3.18 CLEANING

A. The contractor shall clean up all debris resulting from his/her activities daily. The contractor shall remove all cartons, containers, crates, etc., under his/her control as soon as their contents have been removed. Waste shall be collected and placed in a designated location.

B. At the completion of work in any area, the contractor shall clean all work, equipment, etc., keeping it free from dust, dirt, and debris, etc.

C. At the completion of work, all equipment furnished under this section shall be checked for paint damage, and any factory-finished paint that has been damaged shall be repaired to match the adjacent areas. Any cabinet or enclosure that has been deformed shall be replaced with new material and repainted to match the adjacent areas.

3.19 TRAINING

A. Provide training for a designated staff of Owner's representatives. Training shall be provided via self-paced training, web-based or computer-based training, classroom training, or a combination of training methods.

3.20 CONTROLS COMMUNICATION PROTOCOL

A. General. The electronic controls packaged with this equipment shall communicate with the building direct digital control (DDC) system. The DDC system shall communicate with these controls to read the information and change the control setpoints as shown in the points list, sequences of operation, and control schematics. The information to be communicated between the DDC system and these controls shall be in the standard object format as defined in ANSI/ASHRAE Standard 135 (BACnet). Controllers shall communicate with other BACnet objects on the internetwork using the Read (Execute) Property service as defined in Clause 15.5 of Standard 135.

B. Distributed Processing. The controller shall be capable of stand-alone operation and shall continue to provide control functions if the network connection is lost.

C. I/O Capacity. The controller shall contain sufficient I/ O capacity to control the target system.

D. The Controller shall have a physical connection for a laptop computer or a portable operator's tool.

E. Environment. The hardware shall be suitable for the anticipated ambient conditions.
   1. Controllers used outdoors and/or in wet ambient conditions shall be mounted within waterproof enclosures and shall be rated for operation at 40°C to 60°C (40°F to 140°F).
   2. Controllers used in conditioned space shall be mounted in dust-proof enclosures and shall be rated for operation at 0°C to 50°C (32°F to 120°F).

F. Serviceability. Provide diagnostic LEDs for power, communication, and processor. All wiring connections shall be made to field removable, modular terminal strips or to a termination card connected by a ribbon cable.

G. Memory. The Controller shall maintain all BIOS and programming information in the event of a power loss for at least 30 days.

H. Power. Controller shall be able to operate at 90% to 110% of nominal voltage rating.

I. Transformer. Power supply for the Controller must be rated at minimum of 125% of ASC power consumption and shall be fused or current limiting type.

3.21 START-UP AND CHECKOUT PROCEDURES

A. Start up, check out, and test all hardware and software and verify communication between all components.
   1. Verify that all control wiring is properly connected and free of all shorts and ground faults. Verify that terminations are tight.
   2. Verify that all analog and binary input/output points read properly.
   3. Verify alarms and interlocks.
   4. Verify operation of the integrated system.

3.22 SEQUENCES OF OPERATION

A. See Section 230993 - Sequences of Operation, With Points Lists.

END OF SECTION 230923

SECTION 230993
SEQUENCE OF OPERATIONS FOR HVAC CONTROLS

PART 1 GENERAL

1.01 SECTION INCLUDES

A. This section defines the manner and method by which controls function. Requirements for each type of control system operation are specified. Equipment, devices, and system components required for control systems are specified in other sections.

B. Sequence of operation for:

1.02 RELATED REQUIREMENTS

A. Section 230913 - Instrumentation and Control Devices for HVAC.

B. Section 230923 - Direct-Digital Control System for HVAC.

1.03 SUBMITTALS

A. See Section 013000 - Administrative Requirements for submittal procedures.

B. Submit all submittal documents listed in this Section under Section 230923 - Direct-Digital Control System for HVAC.

C. Sequence of Operation Documentation: Submit written sequence of operation for entire HVAC system and each piece of equipment.
   1. Preface: 1 or 2 paragraph overview narrative of the system describing its purpose, components and function.
   2. State each sequence in small segments and give each segment a unique number for referencing in Functional Test procedures; provide a complete description regardless of the completeness and clarity of the sequences specified in Contract Documents.
   3. Include at least the following sequences:
      a. Start-up.
      b. Warm-up mode.
      c. Normal operating mode.
      d. Unoccupied mode.
      e. Shutdown.
      f. Capacity control sequences and equipment staging.
      g. Temperature and pressure control, such as setbacks, setups, resets, etc.
      h. Detailed sequences for all control strategies, such as economizer control, optimum start/stop, staging, optimization, demand limiting, etc.
      i. Effects of power or equipment failure with all standby component functions.
      j. Sequences for all alarms and emergency shut downs.
      k. Seasonal operational differences and recommendations.
      l. Interactions and interlocks with other systems.
   4. Include initial and recommended values for all adjustable settings, setpoints and parameters that are typically set or adjusted by operating staff; and any other control settings or fixed values, delays, etc. that will be useful during testing and operating the equipment.
   5. For packaged controlled equipment, include manufacturer's furnished sequence of operation amplified as required to describe the relationship between the packaged controls and the control system, indicating which points are adjustable control points and which points are only monitored.
   6. Include schedules, if known.

D. Control System Diagrams: Submit graphic schematic of the control system showing each control component and each component controlled, monitored, or enabled.
   1. Label with settings, adjustable range of control and limits.

2. Include flow diagrams for each control system, graphically depicting control logic.
3. Include the system and component layout of all equipment that the control system monitors, enables or controls, even if the equipment is primarily controlled by packaged or integral controls.
4. Include draft copies of graphic displays indicating mechanical system components, control system components, and controlled function status and value.
5. Include all monitoring, control and virtual points specified in elsewhere.
6. Include a key to all abbreviations.

E. Points List: Submit list of all control points indicating at least the following for each point.
1. Name of controlled system.
2. Point abbreviation.
3. Point description; such as dry bulb temperature, airflow, etc.
4. Display unit.
5. Control point or setpoint (Yes / No); i.e. a point that controls equipment and can have its setpoint changed.
6. Monitoring point (Yes / No); i.e. a point that does not control or contribute to the control of equipment but is used for operation, maintenance, or performance verification.
7. Intermediate point (Yes / No); i.e. a point whose value is used to make a calculation which then controls equipment, such as space temperatures that are averaged to a virtual point to control reset.
8. Calculated point (Yes / No); i.e. a “virtual” point generated from calculations of other point values.

F. Project Record Documents: Record actual locations of components and setpoints of controls, including changes to sequences made after submission of shop drawings.

PART 2 PRODUCTS - NOT USED

PART 3 EXECUTION

3.01 VAV ROOFTOP UNIT/AHU, DX OR CHILLED WATER COOLING, NATURAL GAS OR ELECTRIC OR WATER HEATING

A. Run Conditions - Scheduled:
1. The unit shall run based upon an operator adjustable schedule.
2. When the unit is OFF:
a. Outside air damper: Fully closed.
b. Relief air damper: Fully closed.
c. Return air damper: Fully open.
d. Supply fans: Off
e. Return/Relief Fan, as applicable: Off
3. When the unit is ON at Occupied Mode, 5 minutes delay open the outside air damper to its minimum air flow position after start the supply, and return/relief fans as applicable.
4. Maintain OA damper closed at Morning Warm Up, and Unoccupied Modes.
5. During unoccupied mode, the unit shall run when:
a. 20% zones call for cooling.
b. Any zone calls for heating.

B. AHU Optimal Start:
1. The unit shall start prior to scheduled occupancy based on the time necessary for the zones to reach their occupied setpoints. The start time shall automatically adjust based on changes in outside air temperature and zone temperatures.

C. Supply Fan:
1. The supply fan shall run anytime when the unit is commanded to run, unless shutdown on safeties. To prevent short cycling, the supply fan shall have a user definable (adj.) minimum runtime.

2. Alarms shall be provided as follows:
    a. Supply Fan Failure: Commanded on, but the status is off.
    b. Supply Fan in Hand: Commanded off, but the status is on.
    c. Supply Fan Runtime Exceeded: Status runtime exceeds a user definable limit (adj.).

D. Supply Air Duct Static Pressure Control:
1. The controller shall measure duct static pressure and modulate the supply fan VFD speed to maintain a duct static pressure setpoint. The speed shall not drop below 30% (adj.). The static pressure setpoint shall be reset based on zone cooling requirements.
    a. The initial duct static pressure setpoint shall be in 1.0 inch H2O (adj.).
    b. As cooling demand increases, the setpoint shall incrementally reset up to a maximum of in 1.5 inch H2O (adj.).
    c. As cooling demand decreases, the setpoint shall incrementally reset down to a minimum of in 0.5 inch H2O (adj.).
    d. Adjust the setpoint per final testing and balancing result.
2. Alarms shall be provided as follows:
    a. High Supply Air Static Pressure: If the supply air static pressure is 25% (adj.) greater than setpoint.
    b. Low Supply Air Static Pressure: If the supply air static pressure is 25% (adj.) less than setpoint.
    c. Supply Fan VFD Fault.

E. Return Fan:
1. The return fan shall run whenever the supply fan runs.
2. The return fans speed shall be synchronized with the supply fans speed.
3. Alarms shall be provided as follows:
    a. Return Fan Failure: Commanded on, but the status is off.
    b. Return Fan in Hand: Commanded off, but the status is on.
    c. Return Fan Runtime Exceeded: Status runtime exceeds a user definable limit (adj.).
    d. Return Fan VFD Fault.

F. Supply Air Temperature Setpoint - Optimized:
1. The controller shall monitor the supply air temperature and shall maintain a supply air temperature setpoint reset based on zone cooling and heating requirements
2. The supply air temperature setpoint shall be reset for cooling based on zone cooling requirements as follows:
    a. Occupied Cooling Mode:
        1) When outside air dewpoint is above 56 °F (adj.):
            (a) Supply air temperature setpoint shall be 55°F (adj.)
        2) When outside air dewpoint is at or below 56 °F (adj.):
            (a) The initial supply air temperature setpoint shall be 60°F (adj.).
            (b) As cooling demand increases, the setpoint shall incrementally reset down to a minimum of 55°F (adj.).
            (c) As cooling demand decreases, the setpoint shall incrementally reset up to a maximum of 65°F (adj.).
    b. Unoccupied Cooling Mode:
        1) Supply air temperature shall be at 65 °F (adj.).
        2) Modulate cooling valve to maintain the supply air temperature cooling set point.
    c. Preheating Mode:
        1) When mixing air temperature is below 52 °F (adj.), modulate heating coil valve to maintain supply air temperature at set point 60 °F (adj.).

G. Cooling Mode:
1. The cooling shall be enabled whenever:
    a. Outside air temperature is greater than 55°F (adj.).

b. AND the supply fan status is on.
c. AND the heating (if present) is not active.

2. Modulate cooling valve to maintain the supply air temperature cooling set point.

H. Preheating Mode:
1. The preheating shall be enabled whenever:
a. Mixing air temperature is less than 52°F (adj.).
b. AND the supply fan status is on.
c. AND the cooling is Off.
d. AND economizer is disabled.
2. Modulate preheating valve to maintain the supply air temperature cooling set point.

I. Alarms shall be provided as follows:
1. High Supply Air Temp: If the supply air temperature is 5°F (adj.) greater than setpoint.
2. Low Supply Air Temp: If the supply air temperature is 5°F (adj.) less than setpoint.

J. Economizer:
1. The controller shall measure the mixed air temperature and modulate the economizer dampers in sequence to maintain a setpoint 2°F (adj.) less than the supply air temperature setpoint. The outside air dampers shall maintain a minimum adjustable position of 20% (adj.) open whenever occupied.
2. The economizer shall be enabled whenever:
a. The outside air enthalpy is less than 27 Btu/lb (adj.) (Enthalpy of 75°F DB / 50%RH is 28.1 Btu/lb; 55°F DB / 100%RH is 23.2 Btu/lb)
b. AND the supply fan status is ON (both occupied mode and unoccupied mode)
c. AND the supply fan status is on.
3. The economizer shall close whenever:
a. Mixed air temperature drops from 40°F to 35°F (adj.)
b. OR the freezestat (if present) is on.
c. OR on loss of supply fan status.
4. Modulate mixed air damper to maintain the supply air temperature setpoint described in paragraph Supply Air Temperature Setpoint - Optimized.
a. When the economizer is at 100% open and is insufficient to maintain the Supply Air Temperature Setpoint, modulate chilled water valve to maintain the Supply Air Temperature.
5. Economizer shall be applied to both occupied mode and unoccupied mode.

K. Minimum Outside Air Ventilation - Carbon Dioxide (CO2) Control:
1. BAS shall monitor all zone CO2 sensors. The CO2 sensors shall control the Outside Air Ventilation between System Maximum Ventilation and System Minimum Ventilation to maintain all zone CO2 concentration within 1100 PPM.
2. Normal Mode:
a. When all zone CO2 sensor readings are below setpoint, 750 PPM (adj.). The AHU OA damper shall be modulated to close with a time delay ramp that gradually goes from System Maximum Ventilation position to System Minimum Ventilation position over a 20 minute period.
1) During this time, if any zone CO2 reaches 900 ppm, the OA damper shall remain at the present position.
2) When any zone CO2 reaches 1100 ppm, the AHU/RTU shall goes to DVC Mode.
3. DVC Mode:
a. DVC Control shall be activated when:
1) any zone CO2 sensor is over setpoint, 1100 PPM (adj.).
2) And its VAV box is at minimum cooling CFM or above for at least 5 minimums (adj..) at cooling mode,

3) Or VAV box is at heating CFM for at least 5 minimums (adj.) at heating mode.

b. The OA damper shall be modulated open with a time delay ramp that gradually goes from System Minimum Ventilation position to System Maximum Ventilation position over a 20 minute period.

1) During this time, if all zone CO2 drops below 750 ppm, the AHU/RTU shall return to Normal Mode.

4. DDC controller shall monitor the total supply air CFM that shall never drop below 30% setpoint (adj.). Open each VAV up to 30% for proper supply fan operation at minimum fan air flow condition.
5. Alarms shall be provided as follow:
   a. High Zone Carbon Dioxide Concentration: any zone CO2 concentration is greater than 1400 ppm (adj.).

L. Mixed Air Temperature:
1. The controller shall monitor the mixed air temperature and use as required for economizer control (if present) and preheating control (if present).

M. Return Air Humidity:
1. The controller shall monitor the return air humidity and use as required for economizer control (if present) or humidity control (if present).

N. Return Air Temperature:
1. The controller shall monitor the return air temperature and use as required for setpoint control or economizer control (if present).

O. Supply Air Temperature:
1. The controller shall monitor the supply air temperature.
2. Alarms shall be provided as follows:
   a. High Supply Air Temp: If the supply air temperature is greater than 75°F (adj.), except in morning warm up mode.
   b. Low Supply Air Temp: If the supply air temperature is less than 45°F (adj.).

P. OA Flow Station:
1. BAS shall monitor the CFM of OA Flow Station.
2. Alarms shall be provided as follows:
   a. High OA CFM: If OA CFM is 15% greater than setpoint (adj.).
   b. Low OA CFM: If OA CFM is 15% less than setpoint (adj.).

3.02 TERMINAL AIR UNITS

A. Run Conditions - Scheduled:
1. The unit shall run according to a user definable time schedule in the following modes:
   a. Occupied Mode: The unit shall maintain
      1) A 75°F (adj.) cooling setpoint
      2) A 70°F (adj.) heating setpoint.
   b. Unoccupied Mode (night setback): The unit shall maintain
      1) A 82°F (adj.) cooling setpoint.
      2) A 60°F (adj.) heating setpoint.
2. Alarms shall be provided as follows:
   a. High Zone Temp: If the zone temperature is greater than the cooling setpoint by 5°F (adj.).
   b. Low Zone Temp: If the zone temperature is less than the heating setpoint by 5°F (adj.).

B. Zone Setpoint Adjuster:
1. The occupant shall be able to adjust the zone temperature heating and cooling setpoints at the zone sensor.

C. Zone Optimal Start:
   1. The unit shall use an optimal start algorithm for morning start-up. This algorithm shall minimize the unoccupied warm-up or cool-down period while still achieving comfort conditions by the start of scheduled occupied period.

D. Zone Unoccupied Override (Selected Zone as Indicated on Drawing, if applicable):
   1. A timed local override control shall allow an occupant to override the schedule and place the unit into an occupied mode for an adjustable period of time. At the expiration of this time, control of the unit shall automatically return to the schedule.

E. Reversing Variable Volume Terminal Unit - Flow Control:
   1. Occupied Cooling Mode:
      a. Zone damper shall be modulating between maximum occupied CFM (adj.) and minimum occupied CFM (adj.) to maintain the zone cooling temperature setpoint.
      b. When space temperature is within the dead band (setpoint +- 1, adj.), the respective zone VAV shall remain at current CFM setpoint to provide matching demand cooling capacity.
   2. Occupied Reheating Mode:
      a. Conditions to enable the unoccupied reheating mode:
         1) OA temperature > 60°F, adj., and
         2) the zone CFM reaches cooling minimum set point, and
         3) space temperature is below its heating setpoint
      b. The VAV CFM shall remain at cooling minimum set point.
      c. The heating water valve shall modulate to maintain the zone heating temperature setpoint.
      d. The discharge air temperature shall be at 70°F (adj.) or below depending the heating water valve position that can satisfy the zone heating temperature setpoint.
      e. When zone temperature is within the dead band (setpoint +- 1, adj.), the zone damper and heating valve shall remain at current positions to provide matching demand capacity.
      f. Alarms shall be provided when: the discharge air temperature is above 75°F (adj.)
         1) the discharge air temperature is above 75°F (adj.)
   3. Occupied Heating Mode (When OA temperature <= 60°F):
      a. Conditions to enable the unoccupied reheating mode:
         1) OA temperature <= 60°F, and
         2) zone CFM reaches cooling minimum set point, and
         3) zone temperature is below its heating setpoint.
      b. VAV shall operate with the following sequences:
         1) The zone CFM shall remain at cooling minimum set point initially.
         2) The heating water valve shall modulate to maintain the zone heating temperature setpoint;
         3) The discharge air temperature shall be at or below the designed heating discharge air temperature, depending on the position that can satisfy the zone heating temperature set point.
         4) When the discharge air temperature reaches the maximum design discharge air temperature and zone temperature is still below the zone heating setpoint:
            (a) Modulate VAV air damper and gradually increase the CFM up to Maximum heating CFM to maintain the zone heating temperature.
            (b) Modulating the heating control valve to maintain the maximum design heating discharge air temperature.
      c. When zone temperature is within the dead band (setpoint +- 1, adj.), the VAV CFM and heating valve shall remain at current positions to provide matching demand capacity.
      d. Reverse the cycle above when zone temperature is above zone heating setpoint.

4. Occupied - CO2 Ventilation (OA CFM) Control:
    a. When individual zone CO2 level is below setpoint (900 PPM, adj.), zone CFM is allowed to go down to 15% (adj.) of design full flow of cooling to satisfy the zone temperature setpoint.
    b. When individual zone CO2 level is between 900 PPM, adj. to 1100 PPM:
        1) The CO2 sensor shall override the temperature sensor to remain zone CFM at current CFM to maintain the zone CO2 level.
        2) Enable the heating or the reheating mode, as needed, to satisfy the zone heating temperature setpoint.
    c. When individual CO2 sensor is above its setpoint, 1100 PPM (adj.), the CO2 sensor shall override the temperature sensor to increase the zone CFM gradually to maintain zone CO2 level at 1100 PPM:
        1) At heating mode, increase the zone CFM up to design heating CFM.
        2) At cooling or reheat Mode, increase the zone CFM up to design cooling CFM
        3) Enable heating or reheating mode as needed to stratify the zone heating temperature setpoint.
5. Unoccupied Mode:
    a. Unoccupied Cooling Mode:
        1) (When 20% (adj.) of zones call for cooling, AHU/RTU shall be enabled. Set AHU discharge air temperature at 65 F degree , adj during unoccupied mode - Refer AHU/RTU operating sequence.)
        2) Zone damper shall be modulated to maintain the zone unoccupied cooling temperature setpoint.
        3) Turn off AHU/RTU when < 15% (adj.) of zones calls for cooling.
    b. Unoccupied Heating Mode:
        1) (When any zone calls for heating, AHU or RTU shall be enabled. Maintain AHU discharge air temperature 60 f degree or above; remain AHU heating off when return air temperature is 60 f degree or above. Refer to AHU/RTU sequence of operation.)
        2) The zone heating CFM shall remain at minimum heating CFM initially.
        3) The zone heating valve shall modulate to satisfy the zone heating temperature setpoint. The discharge air temperature shall be up to designed heating discharge air temperature.
        4) After zone discharge air temperature reaches maximum heating discharge temperature and the zone continues calling for heating:
            (a) Modulate zone damper up to designed maximum heating cfm to maintain zone heating temperature setpoint.
            (b) Modulate zone heating water valve to maintain the designed discharge air temperature.
        5) Reverse the cycle above when the zone temperature is above unoccupied zone heating setpoint.
        6) Turn off AHU/RTU when all zone CFM is at minimum position and heating valve is fully closed.

F. Discharge Air Temperature:
1. Alarms shall be provided as follows:
    a. High Discharge Air Temp: If the discharge air temperature is greater than 5°F (adj.) above setpoint.
    b. Low Discharge Air Temp: If the discharge air temperature is less than 5°F (adj.) below setpoint.

G. The controller shall monitor the zone discharge air temperature, zone CFM, zone heating valve position, zone temperature; and display them on VAV graphic. Display AHU/RTU discharge air temperature as VAV inlet air temperature on VAV graphic

END OF SECTION 230993

SECTION 233100
HVAC DUCTS AND CASINGS

PART 1 GENERAL

1.01 SECTION INCLUDES

A. Metal ducts.

1.02 RELATED REQUIREMENTS

A. Section 233319 - Duct Silencers.

1.03 REFERENCE STANDARDS

A. ASHRAE (FUND) - ASHRAE Handbook - Fundamentals.

B. ASTM A36/A36M - Standard Specification for Carbon Structural Steel.

C. ASTM A653/A653M - Standard Specification for Steel Sheet, Zinc-Coated (Galvanized) or Zinc-Iron Alloy-Coated (Galvannealed) by the Hot-Dip Process.

D. ASTM E84 - Standard Test Method for Surface Burning Characteristics of Building Materials.

E. ICC-ES AC01 - Acceptance Criteria for Expansion Anchors in Masonry Elements.

F. ICC-ES AC106 - Acceptance Criteria for Predrilled Fasteners (Screw Anchors) in Masonry.

G. ICC-ES AC193 - Acceptance Criteria for Mechanical Anchors in Concrete Elements.

H. ICC-ES AC308 - Acceptance Criteria for Post-Installed Adhesive Anchors in Concrete Elements.

I. NFPA 90A - Standard for the Installation of Air-Conditioning and Ventilating Systems.

J. SMACNA (DCS) - HVAC Duct Construction Standards Metal and Flexible.

1.04 SUBMITTALS

A. See Section 013000 - Administrative Requirements for submittal procedures.

B. Product Data: Provide data for duct materials.

C. Shop Drawings: Indicate duct fitting types, gauges, sizes, welds, and configuration.

1.05 REGULATORY REQUIREMENTS

A. Construct ductwork to NFPA 90A standards.

1.06 FIELD CONDITIONS

A. Do not install duct sealants when temperatures are less than those recommended by sealant manufacturers.

B. Maintain temperatures within acceptable range during and after installation of duct sealants.

1.07 WARRANTY

A. See Section 017800 - Closeout Submittals for additional warranty requirements.

PART 2 PRODUCTS

2.01 REQUIREMENTS FOR ALL PRODUCTS OF THIS SECTION

A. Surface Burning Characteristics: Flame spread/Smoke developed index of 25/50, maximum, when tested in accordance with ASTM E84, NFPA 255, or UL 723.

B. Provide UL Class 1 ductwork, fittings, hangers, supports, and appurtenances in accordance with NFPA 90A and SMACNA (DCS) guidelines unless stated otherwise.

C. Acoustical Treatment: Provide sound-absorbing liners and sectional silencers for metal-based ducts in compliance with Section 233319.

D. Duct Shape and Material in accordance with Allowed Static Pressure Range:

E. Duct Sealing and Leakage in accordance with Static Pressure Class:

a. Leakage:
b. Seal: Class B, apply sealing of transverse joints and longitudinal seams.

2. Duct and Fitting Fabrication and Support: SMACNA (DCS) including specifics for continuously welded round and oval duct fittings.
3. Use reinforced and sealed sheet-metal materials at recommended gauges for indicated operating pressures or pressure class.
4. Provide turning vanes of perforated metal with glass fiber insulation when acoustical lining is indicated.
5. Provide turning vanes of perforated metal with glass fiber insulation when an acoustical lining is required.
   a. Seal: Class A, apply sealing of transverse joints, longitudinal seams, and duct wall penetrations.

F. Duct Fabrication Requirements:
   1) Round: Class 6 or 6 cfm/100 sq ft.
   2) Rectangular: Class 24 or 24 cfm/100 sq ft.

2. Low Pressure Service: From 2 in-wc to 3 in-wc:
   a. Leakage:
      1) Round: Class 3 or 3 cfm/100 sq ft.
3. Medium and High Pressure Service: Above 3 in-wc:
   1) Rectangular: Class 12 or 12 cfm/100 sq ft.
   2) Round: Class 12 or 12 cfm/100 sq ft.
4. Low Pressure Service: Up to 2 in-wc:

G. Provide metal duct unless otherwise indicated. Fibrous glass duct can be substituted at the Contractor's option.
   a. Seal: Class C, apply to seal off transverse joints.
   b. Leakage:

2. Construct tees, bends, and elbows with radius of not less than 1-1/2 times width of duct on centerline. Where not possible and where rectangular elbows must be used, provide airfoil turning vanes of perforated metal with glass fiber insulation.
3. Increase duct sizes gradually, not exceeding 15 degrees divergence wherever possible; maximum 30 degrees divergence upstream of equipment and 45 degrees convergence downstream.
4. Where ducts are connected to exterior wall louvers and duct outlet is smaller than louver frame, provide blank-out panels sealing louver area around duct. Use same material as duct, painted black on exterior side; seal to louver frame and duct.

2.02 GENERAL REQUIREMENTS

1. Galvanized Steel: Hot-dipped galvanized steel sheet, ASTM A653/A653M FS Type B, with G60/Z180 coating.

2.03 METAL DUCTS

1. Round Connection System: Interlocking duct connection system per SMACNA (DCS).
2. Round spiral lock seam duct with galvanized steel outer wall.
3. Fittings: Manufacture with solid inner wall of perforated galvanized steel.

B. Connectors, Fittings, Sealants, and Miscellaneous:
   1. Transverse Duct Connection System: SMACNA "E" rated rigid class connection, interlocking angle and duct edge connection system with sealant, gasket, cleats, and corner clips in accordance with SMACNA (DCS).

C. Round Spiral Duct:

D. Round Metal Ducts:
   a. Manufacturers:
      1) Substitutions: See Section 016000 - Product Requirements.

2) Carlisle HVAC Products; Nexus Flange Connectors with Sealant Pocket: www.carlislehvac.com/#sle.
3) Elgen Manufacturing Company, Inc: www.elgenmfg.com/#sle.
4) L&L Fabrication; www.landlfab.com/duct-fabrication/.

E. Material Requirements:

PART 3 EXECUTION

3.01 INSTALLATION

A. Install, support, and seal ducts in accordance with SMACNA (DCS).

B. Install products following the manufacturer's instructions.

C. During construction, provide temporary closures of metal or taped polyethylene on open ductwork to prevent construction dust from entering the ductwork system.

D. Flexible Ducts: Connect to metal ducts with adhesive.

E. Duct sizes indicated are precise inside dimensions. For lined ducts, maintain sizes inside lining.

F. Locate ducts with sufficient space around equipment to allow normal operating and maintenance activities.

G. Use crimp joints with or without bead for joining round duct sizes 8 inch and smaller with a crimp in the direction of airflow.

H. Use double nuts and lock washers on threaded rod supports.

I. At exterior wall louvers, seal duct to louver frame.

END OF SECTION 233100

SECTION 233423
HVAC POWER VENTILATORS

PART 1 GENERAL

1.01 SECTION INCLUDES

A. Ceiling exhaust fans.

1.02 RELATED REQUIREMENTS

1.03 REFERENCE STANDARDS

A. AMCA (DIR) - (Directory of) Products Licensed Under AMCA International Certified Ratings Program.

B. AMCA 99 - Standards Handbook.

C. AMCA 204 - Balance Quality and Vibration Levels for Fans.

D. AMCA 210 - Laboratory Methods of Testing Fans for Certified Aerodynamic Performance Rating.

E. AMCA 300 - Reverberation Room Methods of Sound Testing of Fans.

F. AMCA 301 - Methods for Calculating Fan Sound Ratings from Laboratory Test Data.

G. NEMA EN 10250 - Enclosures for Electrical Equipment (1000 Volts Maximum).

H. UL 705 - Power Ventilators.

1.04 SUBMITTALS

A. See Section 013000 - Administrative Requirements for submittal procedures.

B. Product Data: Provide data on fans and accessories, including fan curves with specified operating point plotted, power, rpm, sound power levels at rated capacity, and electrical characteristics and connection requirements.

C. Manufacturer's Instructions: Indicate installation instructions.

D. Maintenance Data: Include instructions for lubrication, motor and drive replacement, spare parts list, and wiring diagrams.

1.05 FIELD CONDITIONS

A. Permanent ventilators may be used for ventilation during construction only after ductwork is clean, filters are in place, bearings have been lubricated, and fan has been test run under observation.

PART 2 PRODUCTS

2.01 MANUFACTURERS

A. Greenheck Fan Corporation: www.greenheck.com/#sle.

B. Loren Cook Company: www.lorencook.com/#sle.

C. PennBarry, Division of Air System Components: www.pennbarry.com/#sle.

2.02 POWER VENTILATORS - GENERAL

A. Static and Dynamically Balanced: Comply with AMCA 204.

B. Performance Ratings: Comply with AMCA 210, bearing certified rating seal.

C. Sound Ratings: Comply with AMCA 301, tested to AMCA 300, bearing certified sound ratings seal.

D. Fabrication: Comply with AMCA 99.

E. UL Compliance: UL 705, listed, labeled, designed, manufactured, and tested.

F. Electrical Components: Listed and classified by Underwriters Laboratories Inc. as suitable for the purpose specified and indicated.

G. Enclosed Safety Switches: Comply with NEMA EN 10250.

2.03 CEILING EXHAUST FANS

A. Centrifugal Fan Unit: V-belt or direct driven with galvanized steel housing lined with acoustic insulation, resiliently mounted motor, gravity backdraft damper in discharge.

B. Disconnect Switch: Cord and plug-in housing for thermal overload protected motor and wall mounted switch.

C. Grille: Molded white plastic.

D. Sheaves: Cast iron or steel, dynamically balanced, bored to fit shafts and keyed; variable and adjustable pitch motor sheaves selected so required rpm is reached with sheaves set at mid-position; fan shaft with self-aligning pre-lubricated ball bearings.

PART 3 EXECUTION

3.01 INSTALLATION

A. Install in accordance with manufacturer's instructions.

END OF SECTION 233423

SECTION 260519
LOW-VOLTAGE ELECTRICAL POWER CONDUCTORS AND CABLES

PART 1 GENERAL

1.01 SECTION INCLUDES

A. Single conductor building wire.

B. Metal-clad cable.

C. Wiring connectors.

D. Electrical tape.

E. Heat shrink tubing.

F. Oxide inhibiting compound.

G. Wire pulling lubricant.

H. Cable ties.

I. Firestop sleeves.

1.02 RELATED REQUIREMENTS

A. Section 078400 - Firestopping.

B. Section 260526 - Grounding and Bonding for Electrical Systems: Additional requirements for grounding conductors and grounding connectors.

C. Section 260553 - Identification for Electrical Systems: Identification products and requirements.

1.03 REFERENCE STANDARDS

A. ASTM B3 - Standard Specification for Soft or Annealed Copper Wire.

B. ASTM B8 - Standard Specification for Concentric-Lay-Stranded Copper Conductors, Hard, Medium-Hard, or Soft.

C. ASTM B33 - Standard Specification for Tin-Coated Soft or Annealed Copper Wire for Electrical Purposes.

D. ASTM B787/B787M - Standard Specification for 19 Wire Combination Unilay-Stranded Copper Conductors for Subsequent Insulation.

E. ASTM D3005 - Standard Specification for Low-Temperature Resistant Vinyl Chloride Plastic Pressure-Sensitive Electrical Insulating Tape.

F. ASTM D4388 - Standard Specification for Nonmetallic Semi-Conducting and Electrically Insulating Rubber Tapes.

G. NECA 1 - Standard for Good Workmanship in Electrical Construction.

H. NECA 120 - Standard for Installing Armored Cable (AC) and Type Metal-Clad (MC) Cable.

I. NEMA WC 70 - Power Cables Rated 2000 Volts or Less for the Distribution of Electrical Energy.

J. NETA ATS - Standard for Acceptance Testing Specifications for Electrical Power Equipment And Systems.

K. NFPA 70 - National Electrical Code.

L. UL 44 - Thermoset-Insulated Wires and Cables.

M. UL 83 - Thermoplastic-Insulated Wires and Cables.

N. UL 267 - Outline of Investigation for Wire-Pulling Compounds.

O. UL 486A-486B - Wire Connectors.

P. UL 486C - Splicing Wire Connectors.

Q. UL 486D - Sealed Wire Connector Systems.

R. UL 510 - Polyvinyl Chloride, Polyethylene, and Rubber Insulating Tape.

S. UL 1569 - Metal-Clad Cables.

1.04 ADMINISTRATIVE REQUIREMENTS

A. Coordination:
   1. Coordinate sizes of raceways, boxes, and equipment enclosures installed under other sections with the actual conductors to be installed, including adjustments for conductor sizes increased for voltage drop.
   2. Coordinate with electrical equipment installed under other sections to provide terminations suitable for use with the conductors to be installed.
   3. Notify Architect of any conflicts with or deviations from Contract Documents. Obtain direction before proceeding with work.

1.05 SUBMITTALS

A. See Section 013000 - Administrative Requirements, for submittal procedures.

B. Product Data: Provide manufacturer's standard catalog pages and data sheets for conductors and cables, including detailed information on materials, construction, ratings, listings, and available sizes, configurations, and stranding.

1.06 QUALITY ASSURANCE

A. Comply with requirements of NFPA 70.

B. Product Listing Organization Qualifications: An organization recognized by OSHA as a Nationally Recognized Testing Laboratory (NRTL) and acceptable to authorities having jurisdiction.

1.07 DELIVERY, STORAGE, AND HANDLING

A. Receive, inspect, handle, and store conductors and cables in accordance with manufacturer's instructions.

1.08 FIELD CONDITIONS

A. Do not install or otherwise handle thermoplastic-insulated conductors at temperatures lower than 14 degrees F, unless otherwise permitted by manufacturer's instructions. When installation below this temperature is unavoidable, notify Architect and obtain direction before proceeding with work.

PART 2 PRODUCTS

2.01 CONDUCTOR AND CABLE APPLICATIONS

A. Do not use conductors and cables for applications other than as permitted by NFPA 70 and product listing.

B. Provide single conductor building wire installed in suitable raceway unless otherwise indicated, permitted, or required.

C. Nonmetallic-sheathed cable is not permitted.

D. Underground feeder and branch-circuit cable is not permitted.

E. Service entrance cable is not permitted.

F. Armored cable is not permitted.

G. Metal-clad cable is permitted only as follows:
   1. Where not otherwise restricted, may be used:
      a. Where concealed above accessible ceilings for final connections from junction boxes to luminaires.
         1) Maximum Length: 6 feet.

b. Where concealed in hollow stud walls, above accessible ceilings, and under raised floors for branch circuits up to 20 A.
   1) Exception: Provide single conductor building wire in raceway for circuit homerun from first outlet to panelboard.
2. In addition to other applicable restrictions, may not be used:
   a. Where not approved for use by the authority having jurisdiction.
   b. Where exposed to damage.
   c. For damp, wet, or corrosive locations, unless provided with a PVC jacket listed as suitable for those locations.

2.02 CONDUCTOR AND CABLE GENERAL REQUIREMENTS

A. Provide products that comply with requirements of NFPA 70.

B. Provide products listed, classified, and labeled as suitable for the purpose intended.

C. Provide new conductors and cables manufactured not more than one year prior to installation.

D. Unless specifically indicated to be excluded, provide all required conduit, boxes, wiring, connectors, etc. as required for a complete operating system.

E. Comply with NEMA WC 70.

F. Thermoplastic-Insulated Conductors and Cables: Listed and labeled as complying with UL 83.

G. Thermoset-Insulated Conductors and Cables: Listed and labeled as complying with UL 44.

H. Conductors for Grounding and Bonding: Also comply with Section 260526.

I. Conductors and Cables Installed Where Exposed to Direct Rays of Sun: Listed and labeled as sunlight resistant.

J. Conductors and Cables Installed Exposed in Spaces Used for Environmental Air (only where specifically permitted): Plenum rated, listed and labeled as suitable for use in return air plenums.

K. Conductor Material:
   1. Provide copper conductors only. Aluminum conductors are not acceptable for this project. Conductor sizes indicated are based on copper.
   2. Copper Conductors: Soft drawn annealed, 98 percent conductivity, uncoated copper conductors complying with ASTM B3, ASTM B8, or ASTM B787/B787M unless otherwise indicated.
   3. Tinned Copper Conductors: Comply with ASTM B33.

L. Minimum Conductor Size:
   1. Branch Circuits: 12 AWG.
   2. Control Circuits: 14 AWG.

M. Conductor Color Coding:
   1. Color code conductors as indicated unless otherwise required by the authority having jurisdiction. Maintain consistent color coding throughout project.
   2. Color Coding Method: Integrally colored insulation.
      a. Conductors size 8 AWG and larger may have black insulation color coded using vinyl color coding electrical tape.
   3. Color Code:
      a. 480Y/277 V, 3 Phase, 4 Wire System:
         1) Phase A: Brown.
         2) Phase B: Orange.
         3) Phase C: Yellow.
         4) Neutral/Grounded: Gray.
      b. 208Y/120 V, 3 Phase, 4 Wire System:
         1) Phase A: Black.

2) Phase B: Red.
3) Phase C: Blue.
4) Neutral/Grounded: White.

c. Equipment Ground, All Systems: Green.
d. Travelers for 3-Way and 4-Way Switching: Pink.
e. For modifications or additions to existing wiring systems, comply with existing color code when existing code complies with NFPA 70 and is approved by the authority having jurisdiction.
f. For control circuits, comply with manufacturer's recommended color code.

2.03 SINGLE CONDUCTOR BUILDING WIRE

A. Manufacturers:
1. Copper Building Wire:
a. Cerro Wire LLC: www.cerrowire.com/#sle.
b. Encore Wire Corporation: www.encorewire.com/#sle.
c. General Cable Technologies Corporation: www.generalcable.com/#sle.
d. Southwire Company: www.southwire.com/#sle.
e. Substitutions: See Section 016000 - Product Requirements.

B. Description: Single conductor insulated wire.

C. Conductor Stranding:
1. Feeders and Branch Circuits:
a. Size 10 AWG and Smaller: Solid.
b. Size 8 AWG and Larger: Stranded.

D. Insulation Voltage Rating: 600 V.

E. Insulation:
1. Copper Building Wire: Type THHN/THWN or THHN/THWN-2, except as indicated below.
a. Installed Underground: Type XHHW-2.

2.04 METAL-CLAD CABLE

A. Manufacturers:
1. AFC Cable Systems Inc: www.afcweb.com/#sle.
2. Encore Wire Corporation: www.encorewire.com/#sle.
3. Southwire Company: www.southwire.com/#sle.
4. Substitutions: See Section 016000 - Product Requirements.

B. Description: NFPA 70, Type MC cable listed and labeled as complying with UL 1569, and listed for use in classified firestop systems to be used.

C. Conductor Stranding:
1. Size 10 AWG and Smaller: Solid.
2. Size 8 AWG and Larger: Stranded.

D. Insulation Voltage Rating: 600 V.

E. Insulation: Type THHN, THHN/THWN, or THHN/THWN-2.

F. Provide dedicated neutral conductor for each phase conductor.

G. Grounding: Full-size integral equipment grounding conductor.

H. Armor: Aluminum or steel, interlocked tape.

I. Provide PVC jacket applied over cable armor.

2.05 WIRING CONNECTORS

A. Description: Wiring connectors appropriate for the application, suitable for use with the conductors to be connected, and listed as complying with UL 486A-486B or UL 486C as applicable.

B. Connectors for Grounding and Bonding: Comply with Section 260526.

C. Wiring Connectors for Splices and Taps:
   1. Copper Conductors Size 8 AWG and Smaller: Use twist-on insulated spring connectors.
   2. Copper Conductors Size 6 AWG and Larger: Use mechanical connectors or compression connectors.

D. Wiring Connectors for Terminations:
   1. Provide terminal lugs for connecting conductors to equipment furnished with terminations designed for terminal lugs.
   2. Provide compression adapters for connecting conductors to equipment furnished with mechanical lugs when only compression connectors are specified.
   3. Where over-sized conductors are larger than the equipment terminations can accommodate, provide connectors suitable for reducing to appropriate size, but not less than required for the rating of the overcurrent protective device.
   4. Provide motor pigtail connectors for connecting motor leads in order to facilitate disconnection.
   5. Copper Conductors Size 8 AWG and Larger: Use mechanical connectors or compression connectors where connectors are required.
   6. Conductors for Control Circuits: Use crimped terminals for all connections.

E. Do not use insulation-piercing or insulation-displacement connectors designed for use with conductors without stripping insulation.

F. Do not use push-in wire connectors as a substitute for twist-on insulated spring connectors.

G. Twist-on Insulated Spring Connectors: Rated 600 V, 221 degrees F for standard applications and 302 degrees F for high temperature applications; pre-filled with sealant and listed as complying with UL 486D for damp and wet locations.
   1. Manufacturers:
      a. 3M: www.3m.com/#sle.
      b. Ideal Industries, Inc: www.idealindustries.com/#sle.
      c. NSI Industries LLC: www.nsiindustries.com/#sle.
      d. Substitutions: See Section 016000 - Product Requirements.

H. Mechanical Connectors: Provide bolted type or set-screw type.
   1. Manufacturers:
      a. Burndy LLC: www.burndy.com/#sle.
      b. nVent ILSCO: www.ilsco.com/#sle.
      c. Thomas & Betts Corporation: www.tnb.com/#sle.
      d. Substitutions: See Section 016000 - Product Requirements.

I. Compression Connectors: Provide circumferential type or hex type crimp configuration.
   1. Manufacturers:
      a. Burndy LLC: www.burndy.com/#sle.
      b. nVent ILSCO: www.ilsco.com/#sle.
      c. Thomas & Betts Corporation: www.tnb.com/#sle.
      d. Substitutions: See Section 016000 - Product Requirements.

J. Crimped Terminals: Nylon-insulated, with insulation grip and terminal configuration suitable for connection to be made.
   1. Manufacturers:
      a. Burndy LLC: www.burndy.com/#sle.

b. Ilsco: www.ilsco.com/#sle.
c. Thomas & Betts Corporation: www.tnb.com/#sle.
d. Substitutions: See Section 016000 - Product Requirements.

2.06 ACCESSORIES

A. Electrical Tape:
1. Manufacturers:
a. 3M: www.3m.com/#sle.
b. Plymouth Rubber Europa: www.plymouthrubber.com/#sle.
c. Substitutions: See Section 016000 - Product Requirements.
2. Vinyl Color Coding Electrical Tape: Integrally colored to match color code indicated; listed as complying with UL 510; minimum thickness of 7 mil; resistant to abrasion, corrosion, and sunlight; suitable for continuous temperature environment up to 221 degrees F.
3. Vinyl Insulating Electrical Tape: Complying with ASTM D3005 and listed as complying with UL 510; minimum thickness of 7 mil; resistant to abrasion, corrosion, and sunlight; conformable for application down to 0 degrees F and suitable for continuous temperature environment up to 221 degrees F.
4. Rubber Splicing Electrical Tape: Ethylene Propylene Rubber (EPR) tape, complying with ASTM D4388; minimum thickness of 30 mil; suitable for continuous temperature environment up to 194 degrees F and short-term 266 degrees F overload service.
5. Electrical Filler Tape: Rubber-based insulating moldable putty, minimum thickness of 125 mil; suitable for continuous temperature environment up to 176 degrees F.
6. Moisture Sealing Electrical Tape: Insulating mastic compound laminated to flexible, all-weather vinyl backing; minimum thickness of 90 mil.

B. Wire Pulling Lubricant:
1. Manufacturers:
a. 3M: www.3m.com/#sle.
b. American Polywater Corporation: www.polywater.com/#sle.
c. Ideal Industries, Inc: www.idealindustries.com/#sle.
d. Substitutions: See Section 016000 - Product Requirements.
2. Listed and labeled as complying with UL 267.
3. Suitable for use with conductors/cables and associated insulation/jackets to be installed.
4. Suitable for use at installation temperature.

C. Cable Ties: Material and tensile strength rating suitable for application.

PART 3 EXECUTION

3.01 EXAMINATION

A. Verify that interior of building has been protected from weather.

B. Verify that work likely to damage wire and cable has been completed.

C. Verify that raceways, boxes, and equipment enclosures are installed and are properly sized to accommodate conductors and cables in accordance with NFPA 70.

D. Verify that field measurements are as indicated.

E. Verify that conditions are satisfactory for installation prior to starting work.

3.02 PREPARATION

A. Clean raceways thoroughly to remove foreign materials before installing conductors and cables.

3.03 INSTALLATION

A. Circuiting Requirements:
1. Unless dimensioned, circuit routing indicated is diagrammatic.

2. When circuit destination is indicated without specific routing, determine exact routing required.
3. Arrange circuiting to minimize splices.
4. Include circuit lengths required to install connected devices within 10 ft of location indicated.
5. Maintain separation of Class 1, Class 2, and Class 3 remote-control, signaling, and power-limited circuits in accordance with NFPA 70.
6. Maintain separation of wiring for emergency systems in accordance with NFPA 70.
7. Common Neutrals: Unless otherwise indicated, sharing of neutral/grounded conductors among up to three single phase branch circuits of different phases installed in the same raceway is not permitted. Provide dedicated neutral/grounded conductor for each individual branch circuit.

B. Install products in accordance with manufacturer's instructions.

C. Perform work in accordance with NECA 1 (general workmanship).

D. Install metal-clad cable (Type MC) in accordance with NECA 120.

E. Installation in Raceway:
1. Tape ends of conductors and cables to prevent infiltration of moisture and other contaminants.
2. Pull all conductors and cables together into raceway at same time.
3. Do not damage conductors and cables or exceed manufacturer's recommended maximum pulling tension and sidewall pressure.
4. Use suitable wire pulling lubricant where necessary, except when lubricant is not recommended by the manufacturer.

F. Paralleled Conductors: Install conductors of the same length and terminate in the same manner.

G. Secure and support conductors and cables in accordance with NFPA 70 using suitable supports and methods approved by the authority having jurisdiction. Provide independent support from building structure. Do not provide support from raceways, piping, ductwork, or other systems.

H. Terminate cables using suitable fittings.
1. Metal-Clad Cable (Type MC):
   a. Use listed fittings.
   b. Cut cable armor only using specialized tools to prevent damaging conductors or insulation. Do not use hacksaw or wire cutters to cut armor.
   c. Do not use direct-bearing set-screw type fittings for cables with aluminum armor.

I. Install conductors with a minimum of 12 inches of slack at each outlet.

J. Neatly train and bundle conductors inside boxes, wireways, panelboards and other equipment enclosures.

K. Group or otherwise identify neutral/grounded conductors with associated ungrounded conductors inside enclosures in accordance with NFPA 70.

L. Make wiring connections using specified wiring connectors.
1. Make splices and taps only in accessible boxes. Do not pull splices into raceways or make splices in conduit bodies or wiring gutters.
2. Remove appropriate amount of conductor insulation for making connections without cutting, nicking or damaging conductors.
3. Do not remove conductor strands to facilitate insertion into connector.
4. Clean contact surfaces on conductors and connectors to suitable remove corrosion, oxides, and other contaminates. Do not use wire brush on plated connector surfaces.

5. Mechanical Connectors: Secure connections according to manufacturer's recommended torque settings.
6. Compression Connectors: Secure connections using manufacturer's recommended tools and dies.

M. Insulate splices and taps that are made with uninsulated connectors using methods suitable for the application, with insulation and mechanical strength at least equivalent to unspliced conductors.

N. Insulate ends of spare conductors using vinyl insulating electrical tape.

O. Field-Applied Color Coding: Where vinyl color coding electrical tape is used in lieu of integrally colored insulation as permitted in Part 2 under "Color Coding", apply half overlapping turns of tape at each termination and at each location conductors are accessible.

P. Identify conductors and cables in accordance with Section 260553.

Q. Install firestopping to preserve fire resistance rating of partitions and other elements, using materials and methods specified in Section 078400.

R. Unless specifically indicated to be excluded, provide final connections to all equipment and devices, including those furnished by others, as required for a complete operating system.

3.04 FIELD QUALITY CONTROL

A. See Section 014000 - Quality Requirements, for additional requirements.

B. Inspect and test in accordance with NETA ATS, except Section 4.

C. Perform inspections and tests listed in NETA ATS, Section 7.3.2. The insulation resistance test is required for all conductors. The resistance test for parallel conductors listed as optional is not required.

D. Correct deficiencies and replace damaged or defective conductors and cables.

END OF SECTION 260519

SECTION 260526
GROUNDING AND BONDING FOR ELECTRICAL SYSTEMS

PART 1 GENERAL

1.01 SECTION INCLUDES

A. Grounding and bonding requirements.

B. Conductors for grounding and bonding.

C. Connectors for grounding and bonding.

1.02 RELATED REQUIREMENTS

A. Section 260553 - Identification for Electrical Systems: Identification products and requirements.

1.03 REFERENCE STANDARDS

A. NECA 1 - Standard for Good Workmanship in Electrical Construction.

B. NETA ATS - Standard for Acceptance Testing Specifications for Electrical Power Equipment And Systems.

C. NFPA 70 - National Electrical Code.

D. UL 467 - Grounding and Bonding Equipment.

1.04 ADMINISTRATIVE REQUIREMENTS

A. Coordination:

1. Notify Architect of any conflicts with or deviations from Contract Documents. Obtain direction before proceeding with work.

1.05 SUBMITTALS

A. No submittals required.

1.06 QUALITY ASSURANCE

A. Comply with requirements of NFPA 70.

B. Product Listing Organization Qualifications: An organization recognized by OSHA as a Nationally Recognized Testing Laboratory (NRTL) and acceptable to authorities having jurisdiction.

1.07 DELIVERY, STORAGE, AND HANDLING

A. Receive, inspect, handle, and store products in accordance with manufacturer's instructions.

PART 2 PRODUCTS

2.01 GROUNDING AND BONDING REQUIREMENTS

A. Existing Work: Where existing grounding and bonding system components are indicated to be reused, they may be reused only where they are free from corrosion, integrity and continuity are verified, and where acceptable to the authority having jurisdiction.

B. Do not use products for applications other than as permitted by NFPA 70 and product listing.

C. Provide all required components, conductors, connectors, conduit, boxes, fittings, supports, accessories, etc. as necessary for a complete grounding and bonding system.

D. Where conductor size is not indicated, size to comply with NFPA 70 but not less than applicable minimum size requirements specified.

E. Bonding and Equipment Grounding:

1. Provide bonding for equipment grounding conductors, equipment ground busses, metallic equipment enclosures, metallic raceways and boxes, device grounding terminals, and other normally non-current-carrying conductive materials enclosing electrical conductors/equipment or likely to become energized as indicated and in accordance with NFPA 70.
2. Provide insulated equipment grounding conductor in each feeder and branch circuit raceway. Do not use raceways as sole equipment grounding conductor.
3. Where circuit conductor sizes are increased for voltage drop, increase size of equipment grounding conductor proportionally in accordance with NFPA 70.
4. Unless otherwise indicated, connect wiring device grounding terminal to branch circuit equipment grounding conductor and to outlet box with bonding jumper.
5. Terminate branch circuit equipment grounding conductors on solidly bonded equipment ground bus only. Do not terminate on neutral (grounded) or isolated/insulated ground bus.
6. Provide bonding jumper across expansion or expansion/deflection fittings provided to accommodate conduit movement.

2.02 GROUNDING AND BONDING COMPONENTS

A. General Requirements:
   1. Provide products listed, classified, and labeled as suitable for the purpose intended.
   2. Provide products listed and labeled as complying with UL 467 where applicable.

B. Connectors for Grounding and Bonding:
   1. Description: Connectors appropriate for the application and suitable for the conductors and items to be connected; listed and labeled as complying with UL 467.
   2. Use compression connectors for underground, concealed and other inaccessible connections.
   3. Use mechanical connectors or compression connectors for accessible connections.
   4. Manufacturers - Mechanical and Compression Connectors:
      a. Advanced Lightning Technology (ALT): www.altfab.com/#sle.
      b. Burndy LLC: www.burndy.com/#sle.
      c. Erico International Corporation: www.erico.com
      d. ILSCO: www.ilsco.com
      e. Harger Lightning & Grounding: www.harger.com/#sle.
      f. Thomas & Betts Corporation: www.tnb.com/#sle.
      g. Substitutions: See Section 016000 - Product Requirements.

C. Oxide Inhibiting Compound: Comply with Section 260519.

PART 3 EXECUTION

3.01 EXAMINATION

A. Verify that work likely to damage grounding and bonding system components has been completed.

B. Verify that field measurements are as indicated.

C. Verify that conditions are satisfactory for installation prior to starting work.

3.02 INSTALLATION

A. Install products in accordance with manufacturer's instructions.

B. Perform work in accordance with NECA 1 (general workmanship).

C. Make grounding and bonding connections using specified connectors.
   1. Remove appropriate amount of conductor insulation for making connections without cutting, nicking or damaging conductors. Do not remove conductor strands to facilitate insertion into connector.

2. Remove nonconductive paint, enamel, or similar coating at threads, contact points, and contact surfaces.
3. Mechanical Connectors: Secure connections according to manufacturer's recommended torque settings.
4. Compression Connectors: Secure connections using manufacturer's recommended tools and dies.

D. Identify grounding and bonding system components in accordance with Section 260553.

3.03 FIELD QUALITY CONTROL

A. See Section 014000 - Quality Requirements, for additional requirements.

B. Inspect and test in accordance with NETA ATS except Section 4.

C. Perform inspections and tests listed in NETA ATS, Section 7.13.

END OF SECTION 260526

SECTION 260529
HANGERS AND SUPPORTS FOR ELECTRICAL SYSTEMS

PART 1 GENERAL

1.01 SECTION INCLUDES

A. Support and attachment requirements and components for equipment, conduit, cable, boxes, and other electrical work.

1.02 RELATED REQUIREMENTS

A. Section 260533.13 - Conduit for Electrical Systems: Additional support and attachment requirements for conduits.

B. Section 260533.16 - Boxes for Electrical Systems: Additional support and attachment requirements for boxes.

C. Section 265100 - Interior Lighting: Additional support and attachment requirements for interior luminaires.

1.03 REFERENCE STANDARDS

A. ASTM A123/A123M - Standard Specification for Zinc (Hot-Dip Galvanized) Coatings on Iron and Steel Products.

B. ASTM A153/A153M - Standard Specification for Zinc Coating (Hot-Dip) on Iron and Steel Hardware.

C. ASTM B633 - Standard Specification for Electrodeposited Coatings of Zinc on Iron and Steel.

D. MFMA-4 - Metal Framing Standards Publication.

E. NECA 1 - Standard for Good Workmanship in Electrical Construction.

F. NFPA 70 - National Electrical Code.

G. UL 5B - Strut-Type Channel Raceways and Fittings.

1.04 ADMINISTRATIVE REQUIREMENTS

A. Coordination:
   1. Coordinate sizes and arrangement of supports and bases with actual equipment and components to be installed.
   2. Coordinate work to provide additional framing and materials required for installation.
   3. Coordinate compatibility of support and attachment components with mounting surfaces at installed locations.
   4. Coordinate arrangement of supports with ductwork, piping, equipment and other potential conflicts.
   5. Notify Architect of conflicts with or deviations from Contract Documents. Obtain direction before proceeding with work.

1.05 SUBMITTALS

A. No submittals required.

1.06 QUALITY ASSURANCE

A. Products: Listed and classified by a Nationally Recognized Testing Laboratory as suitable for the purpose specified and indicated.

B. Product Listing Organization Qualifications: Organization recognized by OSHA as Nationally Recognized Testing Laboratory (NRTL) and acceptable to authorities having jurisdiction.

1.07 DELIVERY, STORAGE, AND HANDLING

A. Receive, inspect, handle, and store products in accordance with manufacturer's instructions.

PART 2 PRODUCTS

2.01 SUPPORT AND ATTACHMENT COMPONENTS

A. General Requirements:
   1. Comply with the following. Where requirements differ, comply with most stringent.
      a. NFPA 70.
      b. Requirements of authorities having jurisdiction.
   2. Provide required hangers, supports, anchors, fasteners, fittings, accessories, and hardware as necessary for complete installation of electrical work.
   3. Provide products listed, classified, and labeled as suitable for purpose intended, where applicable.
   4. Do not use products for applications other than as permitted by NFPA 70 and product listing.
   5. Steel Components: Use corrosion-resistant materials suitable for environment where installed.
      a. Indoor Dry Locations: Use zinc-plated steel.
      b. Outdoor and Damp or Wet Indoor Locations: Use galvanized steel or stainless steel.
      c. Zinc-Plated Steel: Electroplated in accordance with ASTM B633.
      d. Galvanized Steel: Hot-dip galvanized after fabrication in accordance with ASTM A123/A123M or ASTM A153/A153M.

B. Conduit and Cable Supports: Straps and clamps suitable for conduit or cable to be supported.
   1. Conduit Straps: One-hole or two-hole type; steel or malleable iron.
   2. Conduit Clamps: Bolted type.

C. Outlet Box Supports: Hangers and brackets suitable for boxes to be supported.

D. Metal Channel/Strut Framing Systems:
   1. Description: Factory-fabricated, continuous-slot, metal channel/strut and associated fittings, accessories, and hardware required for field assembly of supports.
   2. Comply with MFMA-4.
   3. Channel Material:
      a. Indoor Dry Locations: Use painted steel, zinc-plated steel, or galvanized steel.
      b. Outdoor and Damp or Wet Indoor Locations: Use galvanized steel.
   4. Minimum Channel Thickness: Steel sheet, 12 gauge, 0.1046 inch.
   5. Minimum Channel Dimensions: 1-5/8 inch wide by 13/16 inch high.

E. Anchors and Fasteners:
   1. Concrete: Use preset concrete inserts or expansion anchors.
      a. Preset Concrete Inserts: Continuous metal channel (strut) and spot inserts specifically designed to be cast in concrete ceilings, walls, and floors.
         1) Comply with MFMA-4.
         2) Channel Material: Use galvanized steel.
   2. Solid or Grout-Filled Masonry: Use expansion anchors.
   3. Hollow Masonry: Use toggle bolts.
   4. Hollow Stud Walls: Use toggle bolts.
   5. Steel: Use beam clamps.
   6. Sheet Metal: Use sheet metal screws.
   7. Plastic and lead anchors are not permitted.
   8. Powder-actuated fasteners are not permitted.
   9. Hammer-driven anchors and fasteners are not permitted.
   10. Preset Concrete Inserts: Continuous metal channel/strut and spot inserts specifically designed to be cast in concrete ceilings, walls, and floors.
      a. Comply with MFMA-4.
      b. Channel Material: Use galvanized steel.

c. Minimum Channel Thickness: Steel sheet, 12 gauge, 0.1046 inch minimum base metal thickness.

PART 3 EXECUTION

3.01 EXAMINATION

A. Verify that field measurements are as indicated.

B. Verify that mounting surfaces are ready to receive support and attachment components.

C. Verify that conditions are satisfactory for installation prior to starting work.

3.02 INSTALLATION

A. Install products in accordance with manufacturer's instructions.

B. Install hangers and supports in accordance with NECA 1.

C. Provide independent support from building structure. Do not provide support from piping, ductwork, or other systems.

D. Unless specifically indicated or approved by Architect, do not provide support from suspended ceiling support system or ceiling grid.

E. Unless specifically indicated or approved by Architect, do not provide support from roof deck.

F. Do not penetrate or otherwise notch or cut structural members without approval of Structural Engineer.

G. Field Welding, Where Approved by Architect: See Section 055000.

H. Equipment Support and Attachment:
   1. Use metal, fabricated supports or supports assembled from metal channel/strut to support equipment as required.
   2. Use metal channel/strut secured to studs to support equipment surface mounted on hollow stud walls when wall strength is not sufficient to resist pull-out.
   3. Use metal channel/strut to support surface-mounted equipment in wet or damp locations to provide space between equipment and mounting surface.
   4. Securely fasten floor-mounted equipment. Do not install equipment such that it relies on its own weight for support.

I. Conduit Support and Attachment: See Section 260533.13 for additional requirements.

J. Box Support and Attachment: See Section 260533.16 for additional requirements.

K. Interior Luminaire Support and Attachment: See Section 265100 for additional requirements.

L. Preset Concrete Inserts: Use manufacturer provided closure strips to inhibit concrete seepage during concrete pour.

M. Secure fasteners in accordance with manufacturer's recommended torque settings.

N. Remove temporary supports.

O. Identify independent electrical component support wires above accessible ceilings, where permitted, with color distinguishable from ceiling support wires in accordance with NFPA 70.

3.03 FIELD QUALITY CONTROL

A. See Section 014000 - Quality Requirements for additional requirements.

B. Inspect support and attachment components for damage and defects.

C. Repair cuts and abrasions in galvanized finishes using zinc-rich paint recommended by manufacturer. Replace components that exhibit signs of corrosion.

D. Correct deficiencies and replace damaged or defective support and attachment components.

END OF SECTION 260529

SECTION 260533.13
CONDUIT FOR ELECTRICAL SYSTEMS

PART 1 GENERAL

1.01 SECTION INCLUDES

A. Galvanized steel rigid metal conduit (RMC).

B. Flexible metal conduit (FMC).

C. Liquidtight flexible metal conduit (LFMC).

D. Galvanized steel electrical metallic tubing (EMT).

E. Rigid polyvinyl chloride (PVC) conduit.

1.02 RELATED REQUIREMENTS

A. Section 078400 - Firestopping.

B. Section 260526 - Grounding and Bonding for Electrical Systems.
   1. Includes additional requirements for fittings for grounding and bonding.

C. Section 260529 - Hangers and Supports for Electrical Systems.

D. Section 260553 - Identification for Electrical Systems: Identification products and requirements.

1.03 REFERENCE STANDARDS

A. ANSI C80.1 - American National Standard for Electrical Rigid Steel Conduit (ERSC).

B. ANSI C80.3 - American National Standard for Electrical Metallic Tubing -- Steel (EMT-S).

C. NECA 1 - Standard for Good Workmanship in Electrical Construction.

D. NECA 101 - Standard for Installing Steel Conduits (Rigid, IMC, EMT).

E. NECA 111 - Standard for Installing Nonmetallic Raceways (RNC, ENT, LFNC).

F. NEMA FB 1 - Fittings, Cast Metal Boxes, and Conduit Bodies for Conduit, Electrical Metallic Tubing, and Cable.

G. NEMA TC 2 - Electrical Polyvinyl Chloride (PVC) Conduit.

H. NEMA TC 3 - Polyvinyl Chloride (PVC) Fittings for Use with Rigid PVC Conduit and Tubing.

I. NFPA 70 - National Electrical Code.

J. UL 1 - Flexible Metal Conduit.

K. UL 6 - Electrical Rigid Metal Conduit-Steel.

L. UL 360 - Liquid-Tight Flexible Metal Conduit.

M. UL 514B - Conduit, Tubing, and Cable Fittings.

N. UL 651 - Schedule 40, 80, Type EB and A Rigid PVC Conduit and Fittings.

O. UL 797 - Electrical Metallic Tubing-Steel.

P. UL 1203 - Explosion-Proof and Dust-Ignition-Proof Electrical Equipment for Use in Hazardous (Classified) Locations.

Q. UL 2419 - Outline of Investigation for Electrically Conductive Corrosion Resistant Compounds.

1.04 ADMINISTRATIVE REQUIREMENTS

A. Coordination:
   1. Coordinate minimum sizes of conduits with actual type and quantity of conductors to be installed, including adjustments for conductor sizes increased for voltage drop.
   2. Coordinate arrangement of conduits with structural members, ductwork, piping, equipment, and other potential conflicts.
   3. Verify exact conduit termination locations required for boxes, enclosures, and equipment.

4. Coordinate work to provide roof penetrations that preserve integrity of roofing system and do not void roof warranty.
5. Notify Architect of conflicts with or deviations from Contract Documents. Obtain direction before proceeding with work.

B. Sequencing:
1. Do not begin installation of conductors and cables until installation of conduit between termination points is complete.

1.05 SUBMITTALS

A. See Section 013000 - Administrative Requirements for submittals procedures.

1.06 QUALITY ASSURANCE

A. Products: Listed and classified by a Nationally Recognized Testing Laboratory as suitable for the purpose specified and indicated.

B. Product Listing Organization Qualifications: Organization recognized by OSHA as Nationally Recognized Testing Laboratory (NRTL) and acceptable to authorities having jurisdiction.

1.07 DELIVERY, STORAGE, AND HANDLING

A. Receive, inspect, handle, and store conduit and fittings in accordance with manufacturer's instructions.

PART 2 PRODUCTS

2.01 CONDUIT APPLICATIONS

A. Use the conduit types indicated for the specified applications. Where conduit type for a particular application is not specified, consult Architect.

B. Underground:
1. Where rigid polyvinyl chloride (PVC) conduit is provided, transition to galvanized steel rigid metal conduit (RMC), stainless steel rigid metal conduit (RMC), galvanized steel intermediate metal conduit (IMC), stainless steel intermediate metal conduit (IMC), or schedule 80 rigid PVC conduit where emerging from underground.
2. Where rigid polyvinyl (PVC) conduit larger than 2-inch (53 mm) trade size is provided, use galvanized steel rigid metal conduit (RMC) elbows, stainless steel rigid metal conduit (RMC) elbows, galvanized steel intermediate metal conduit (IMC) elbows, stainless steel intermediate metal conduit (IMC) elbows, PVC-coated galvanized steel rigid metal conduit (RMC) elbows, or concrete-encased PVC elbows for bends.

C. Embedded Within Concrete:
1. Within Slab on Grade: Not permitted.
2. Within Slab Above Ground: Not permitted.

D. Flexible Connections to Luminaires Above Accessible Ceilings: Use flexible metal conduit (FMC).

E. Flexible Connections to Vibrating Equipment:
1. Dry Locations: Use flexible metal conduit (FMC).
2. Damp, Wet, or Corrosive Locations: Use liquidtight flexible metal conduit (LFMC).
3. Maximum Length: 6 feet unless otherwise indicated.

F. Fished in Existing Walls, Where Necessary: Use flexible metal conduit (FMC), galvanized steel electrical metallic tubing (EMT), or stainless steel electrical metallic tubing (EMT).

2.02 CONDUIT - GENERAL REQUIREMENTS

A. Comply with NFPA 70.

B. Existing Work: Where existing conduits are indicated to be reused, they may be reused only where they comply with specified requirements, are free from corrosion, and integrity is verified by pulling mandrel through them.

C. Structured Cabling for Voice and Data Systems: Conduits Only. See Owners low-voltage matrix of responsibility.

D. Fittings for Grounding and Bonding: See Section 260526 for additional requirements.

E. Provide conduit, fittings, supports, and accessories required for complete raceway system.

F. Provide products listed, classified, and labeled by testing firm acceptable to authority having jurisdiction as suitable for the purpose indicated.

G. Minimum Conduit Size:

H. Where conduit size is not indicated, size to comply with NFPA 70.

2.03 GALVANIZED STEEL RIGID METAL CONDUIT (RMC)

A. Manufacturers:
   1. Allied Tube & Conduit, a division of Atkore International: www.alliedeg.com/#sle.
   2. Nucor Tubular Products: www.nucortubular.com/#sle.
   3. Western Tube, a division of Zekelman Industries: www.westerntube.com/#sle.
   4. Wheatland Tube, a division of Zekelman Industries: www.wheatland.com/#sle.
   5. Substitutions: See Section 016000 - Product Requirements.

B. Description: NFPA 70, Type RMC galvanized steel rigid metal conduit complying with ANSI C80.1 and listed and labeled as complying with UL 6.

C. Fittings:
   1. Manufacturers:
      a. Bridgeport Fittings Inc: www.bptfittings.com/#sle.
      b. O-Z/Gedney, a brand of Emerson Electric Co: www.emerson.com/#sle.
      c. Substitutions: See Section 016000 - Product Requirements.
   2. Nonhazardous Locations: Use fittings complying with NEMA FB 1 and listed and labeled as complying with UL 514B or UL 6.
   3. Hazardous/Classified Locations: Use fittings listed and labeled as complying with UL 1203 for classification of installed location.
   4. Material: Use steel or malleable iron.
      a. Do not use die cast zinc fittings.
   5. Connectors and Couplings: Use threaded type fittings only. Threadless fittings, including set screw and compression/gland types, are not permitted.

2.04 FLEXIBLE METAL CONDUIT (FMC)

A. Manufacturers:
   1. AFC Cable Systems, Inc: www.afcweb.com.
   2. Electri-Flex Company: www.electriflex.com.
   3. International Metal Hose: www.metalhose.com.
   4. Substitutions: See Section 016000 - Product Requirements.

B. Description: NFPA 70, Type FMC standard-wall steel flexible metal conduit listed and labeled as complying with UL 1, and listed for use in classified firestop systems.

C. Fittings:
   1. Manufacturers:
      a. Bridgeport Fittings Inc: www.bptfittings.com/#sle.
      b. O-Z/Gedney, a brand of Emerson Electric Co: www.emerson.com/#sle.
      c. Substitutions: See Section 016000 - Product Requirements.
   2. Description: Fittings complying with NEMA FB 1 and listed and labeled as complying with UL 514B.
   3. Material: Use steel or malleable iron.
      a. Do not use die cast zinc fittings.

2.05 LIQUIDTIGHT FLEXIBLE METAL CONDUIT (LFMC)

A. Manufacturers:
   1. AFC Cable Systems, Inc: www.afcweb.com.
   2. Electri-Flex Company: www.electriflex.com.
   3. International Metal Hose: www.metalhose.com.
   4. Substitutions: See Section 016000 - Product Requirements.

B. Description: NFPA 70, Type LFMC polyvinyl chloride (PVC) jacketed steel flexible metal conduit listed and labeled as complying with UL 360.

C. Fittings:
   1. Manufacturers:
      a. Bridgeport Fittings Inc: www.bptfittings.com/#sle.
      b. O-Z/Gedney, a brand of Emerson Electric Co: www.emerson.com/#sle.
      c. Substitutions: See Section 016000 - Product Requirements.
   2. Description: Fittings complying with NEMA FB 1 and listed and labeled as complying with UL 514B.
   3. Material: Use steel or malleable iron.
      a. Do not use die cast zinc fittings.

2.06 GALVANIZED STEEL ELECTRICAL METALLIC TUBING (EMT)

A. Manufacturers:
   1. Allied Tube & Conduit: www.alliedeg.com.
   2. Nucor Tubular Products: www.nucortubular/#sle.
   3. Wheatland Tube Company: www.wheatland.com.
   4. Substitutions: See Section 016000 - Product Requirements.

B. Description: NFPA 70, Type EMT galvanized steel electrical metallic tubing complying with ANSI C80.3 and listed and labeled as complying with UL 797.

C. Fittings:
   1. Manufacturers:
      a. Bridgeport Fittings Inc: www.bptfittings.com/#sle.
      b. O-Z/Gedney, a brand of Emerson Electric Co: www.emerson.com/#sle.
      c. Substitutions: See Section 016000 - Product Requirements.
   2. Description: Fittings complying with NEMA FB 1 and listed and labeled as complying with UL 514B.
   3. Material: Use steel or malleable iron.
      a. Do not use die cast zinc fittings.
   4. Connectors and Couplings: Use compression/gland or set-screw type.
      a. Do not use indenter type connectors and couplings.

2.07 RIGID POLYVINYL CHLORIDE (PVC) CONDUIT

A. Manufacturers:
   1. Cantex Inc: www.cantexinc.com/#sle.
   2. JM Eagle: www.jmeagle.com/#sle.
   3. Substitutions: See Section 016000 - Product Requirements.

B. Description: NFPA 70, Type PVC rigid polyvinyl chloride conduit complying with NEMA TC 2 and listed and labeled as complying with UL 651; Schedule 40 unless otherwise indicated, Schedule 80 where subject to physical damage; rated for use with conductors rated 90 degrees C.

C. Fittings:
   1. Manufacturer: Same as manufacturer of conduit to be connected.
   2. Description: Fittings complying with NEMA TC 3 and listed and labeled as complying with UL 651; material to match conduit.

2.08 ACCESSORIES

A. Corrosion Protection Tape: PVC-based, minimum thickness of 20 mil, 0.020 inch.

B. Conduit Joint Compound: Corrosion-resistant, electrically conductive compound listed as complying with UL 2419; suitable for use with conduit to be installed.

C. Solvent Cement for PVC Conduit and Fittings: As recommended by manufacturer of conduit and fittings to be installed.

D. Pull Strings: Use nylon or polyester tape with average breaking strength of not less than 1,250 lbf.

E. Sealing Compound for Hazardous/Classified Location Sealing Fittings: Listed for use with particular fittings to be installed.

F. Sealing Systems for Concrete Penetrations:
   1. Sleeves: Provide water stop ring or cement coating that bonds to concrete to prevent water infiltration.
   2. Rate for minimum of 40 psig; suitable for sealing around conduits to be installed.

PART 3 EXECUTION

3.01 EXAMINATION

A. Verify that field measurements are as indicated.

B. Verify that mounting surfaces are ready to receive conduits.

C. Verify that conditions are satisfactory for installation prior to starting work.

D. Verify routing and termination locations of conduit prior to rough-in.

3.02 INSTALLATION

A. Install products in accordance with manufacturer's instructions.

B. Install conduit in accordance with NECA 1.

C. Install galvanized steel rigid metal conduit (RMC) in accordance with NECA 101.

D. Install rigid polyvinyl chloride (PVC) conduit in accordance with NECA 111.

E. Conduit Routing:
   1. Unless dimensioned, conduit routing indicated is diagrammatic.
   2. When conduit destination is indicated without specific routing, determine exact routing required.
   3. Conceal conduits unless specifically indicated to be exposed.
   4. Conduits in the following areas may be exposed, unless otherwise indicated:
      a. Electrical rooms.
      b. Mechanical equipment rooms.
      c. Within joists in areas with no ceiling.
   5. Unless otherwise approved, do not route exposed conduits:
      a. Across floors.
      b. Across top of parapet walls.
      c. Across building exterior surfaces.
   6. Arrange conduit to maintain adequate headroom, clearances, and access.
   7. Arrange conduit to provide no more than equivalent of four 90-degree bends between pull points.
   8. Arrange conduit to provide no more than 150 feet between pull points.
   9. Route conduits above water and drain piping where possible.
   10. Arrange conduit to prevent moisture traps. Provide drain fittings at low points and at sealing fittings where moisture may collect.
   11. Maintain minimum clearance of 6 inches between conduits and piping for other systems.
   12. Maintain minimum clearance of 12 inches between conduits and hot surfaces. This includes, but is not limited to:

a. Heaters.
b. Hot water piping.
c. Flues.

13. Group parallel conduits in same area on common rack.

F. Conduit Support:
1. Secure and support conduits in accordance with NFPA 70 using suitable supports and methods approved by authorities having jurisdiction; see Section 260529.
2. Provide independent support from building structure. Do not provide support from piping, ductwork, or other systems.
3. Installation Above Suspended Ceilings: Do not provide support from ceiling support system. Do not provide support from ceiling grid or allow conduits to lay on ceiling tiles.
4. Use conduit strap to support single surface-mounted conduit.
   a. Use clamp back spacer with conduit strap for damp and wet locations to provide space between conduit and mounting surface.
5. Use metal channel/strut with accessory conduit clamps to support multiple parallel surface-mounted conduits.
6. Use conduit clamp to support single conduit from beam clamp or threaded rod.
7. Use trapeze hangers assembled from threaded rods and metal channel/strut with accessory conduit clamps to support multiple parallel suspended conduits.
8. Use nonpenetrating rooftop supports to support conduits routed across rooftops, where approved.
9. Use of spring steel conduit clips for support of conduits is not permitted.
10. Use of wire for support of conduits is not permitted.
11. Where conduit support intervals specified in NFPA 70 and NECA standards differ, comply with most stringent requirements.

G. Connections and Terminations:
1. Use approved zinc-rich paint or conduit joint compound on field-cut threads of galvanized steel conduits prior to making connections.
2. Where two threaded conduits must be joined and neither can be rotated, use three-piece couplings or split couplings. Do not use running threads.
3. Use suitable adapters where required to transition from one type of conduit to another.
4. Provide drip loops for liquidtight flexible conduit connections to prevent drainage of liquid into connectors.
5. Terminate threaded conduits in boxes and enclosures using threaded hubs or double lock nuts for dry locations and raintight hubs for wet locations.
6. Where spare conduits stub up through concrete floors and are not terminated in box or enclosure, provide threaded couplings equipped with threaded plugs set flush with finished floor.
7. Provide insulating bushings, insulated throats, or listed metal fittings with smooth, rounded edges at conduit terminations to protect conductors.
8. Secure joints and connections to provide mechanical strength and electrical continuity.

H. Penetrations:
1. Do not penetrate or otherwise notch or cut structural members, including footings and grade beams, without approval of Structural Engineer.
2. Make penetrations perpendicular to surfaces.
3. Provide sleeves for penetrations as required to facilitate installation. Set sleeves flush with exposed surfaces unless otherwise indicated or required.
4. Conceal bends for conduit risers emerging above ground.
5. Provide suitable sealing system where conduits penetrate exterior wall below grade.
6. Where conduits penetrate waterproof membrane, seal to maintain integrity of membrane.
7. Provide decorative metal escutcheon plates for conduit penetrations exposed to public view.

8. Install firestopping to preserve fire resistance rating of partitions and other elements; see Section 078400.

I. Conduit Movement Provisions: Where conduits are subject to movement, provide expansion and expansion/deflection fittings to prevent damage to enclosed conductors or connected equipment. This includes, but is not limited to:
   1. Where conduits cross structural joints intended for expansion, contraction, or deflection.
   2. Where calculated in accordance with NFPA 70 for rigid polyvinyl chloride (PVC) conduit installed above ground to compensate for thermal expansion and contraction.
   3. Where conduits are subject to earth movement by settlement or frost.

J. Conduit Sealing:
   1. Use foam conduit sealant to prevent entry of moisture and gases. This includes, but is not limited to:
      a. Where conduits enter building from outside.
      b. Where service conduits enter building from underground distribution system.
      c. Where conduits enter building from underground.
      d. Where conduits may transport moisture to contact live parts.
   2. Where conduits cross barriers between areas of potential substantial temperature differential, use foam conduit sealant at accessible point near penetration to prevent condensation. This includes, but is not limited to:
      a. Where conduits pass from outdoors into conditioned interior spaces.
      b. Where conduits pass from unconditioned interior spaces into conditioned interior spaces.

K. Provide pull string in each empty conduit and in conduits where conductors and cables are to be installed by others. Leave minimum slack of 12 inches at each end.

L. Provide grounding and bonding; see Section 260526.

M. Identify conduits; see Section 260553.

3.03 FIELD QUALITY CONTROL

A. See Section 014000 - Quality Requirements for additional requirements.

B. Repair cuts and abrasions in galvanized finishes using zinc-rich paint recommended by manufacturer. Replace components that exhibit signs of corrosion.

C. Correct deficiencies and replace damaged or defective conduits.

3.04 CLEANING

A. Clean interior of conduits to remove moisture and foreign matter.

3.05 PROTECTION

A. Immediately after installation of conduit, use suitable manufactured plugs to provide protection from entry of moisture and foreign material and do not remove until ready for installation of conductors.

END OF SECTION 260533.13

SECTION 260533.16
BOXES FOR ELECTRICAL SYSTEMS

PART 1 GENERAL

1.01 SECTION INCLUDES

A. Outlet and device boxes up to 100 cubic inches, including those used as junction and pull boxes.

B. Cabinets and enclosures, including junction and pull boxes larger than 100 cubic inches.

1.02 RELATED REQUIREMENTS

A. Section 078400 - Firestopping.

B. Section 083100 - Access Doors and Panels: Panels for maintaining access to concealed boxes.

C. Section 260526 - Grounding and Bonding for Electrical Systems.

D. Section 260529 - Hangers and Supports for Electrical Systems.

E. Section 260533.13 - Conduit for Electrical Systems:
   1. Conduit bodies and other fittings.
   2. Additional requirements for locating boxes to limit conduit length and/or number of bends between pulling points.

F. Section 260553 - Identification for Electrical Systems: Identification products and requirements.

G. Section 262726 - Wiring Devices:
   1. Wall plates.
   2. Additional requirements for locating boxes for wiring devices.

1.03 REFERENCE STANDARDS

A. NECA 1 - Standard for Good Workmanship in Electrical Construction.

B. NECA 130 - Standard for Installing and Maintaining Wiring Devices.

C. NEMA EN 10250 - Enclosures for Electrical Equipment (1000 Volts Maximum).

D. NEMA FB 1 - Fittings, Cast Metal Boxes, and Conduit Bodies for Conduit, Electrical Metallic Tubing, and Cable.

E. NEMA OS 1 - Sheet-Steel Outlet Boxes, Device Boxes, Covers, and Box Supports.

F. NFPA 70 - National Electrical Code.

G. UL 50E - Enclosures for Electrical Equipment, Environmental Considerations.

H. UL 514A - Metallic Outlet Boxes.

1.04 ADMINISTRATIVE REQUIREMENTS

A. Coordination:
   1. Coordinate the work with other trades to avoid placement of ductwork, piping, equipment, or other potential obstructions within the dedicated equipment spaces and working clearances for electrical equipment required by NFPA 70.
   2. Coordinate arrangement of electrical equipment with the dimensions and clearance requirements of the actual equipment to be installed.
   3. Coordinate minimum sizes of boxes with the actual installed arrangement of conductors, clamps, support fittings, and devices, calculated according to NFPA 70.
   4. Coordinate minimum sizes of pull boxes with the actual installed arrangement of connected conduits, calculated according to NFPA 70.
   5. Coordinate the placement of boxes with millwork, furniture, devices, equipment, etc. installed under other sections or by others.
   6. Coordinate the work with other trades to preserve insulation integrity.

7. Coordinate the work with other trades to provide walls suitable for installation of flush-mounted boxes where indicated.
8. Notify Architect of any conflicts with or deviations from Contract Documents. Obtain direction before proceeding with work.

1.05 SUBMITTALS

A. See Section 013000 - Administrative Requirements, for submittal procedures.

B. Product Data: Provide manufacturer's standard catalog pages and data sheets for junction and pull boxes.
   1. Outlet and device box submittals are not required.

C. Maintenance Materials: Furnish the following for Owner's use in maintenance of project.
   1. See Section 016000 - Product Requirements, for additional provisions.
   2. Keys for Lockable Enclosures: Two of each different key.

1.06 QUALITY ASSURANCE

A. Comply with requirements of NFPA 70.

B. Comply with NEMA 250 for electrical cabinets and enclosures larger than 100 cubic inches (1,650 cu cm).

C. Comply with SCTE 77 for Polymer Concrete Underground Boxes/Enclosures.

D. Products: Listed and classified by a Nationally Recognized Testing Laboratory as suitable for the purpose specified and indicated.

E. Product Listing Organization Qualifications: An organization recognized by OSHA as a Nationally Recognized Testing Laboratory (NRTL) and acceptable to authorities having jurisdiction.

1.07 DELIVERY, STORAGE, AND HANDLING

A. Receive, inspect, handle, and store products in accordance with manufacturer's instructions.

PART 2 PRODUCTS

2.01 BOXES

A. General Requirements:
   1. Do not use boxes and associated accessories for applications other than as permitted by NFPA 70 and product listing.
   2. Provide all boxes, fittings, supports, and accessories required for a complete raceway system and to accommodate devices and equipment to be installed.
   3. Provide products listed, classified, and labeled as suitable for the purpose intended.
   4. Where box size is not indicated, size to comply with NFPA 70 but not less than applicable minimum size requirements specified.
   5. Provide grounding terminals within boxes where equipment grounding conductors terminate.

B. Outlet and Device Boxes Up to 100 cubic inches, Including Those Used as Junction and Pull Boxes:
   1. Use sheet-steel boxes for dry locations unless otherwise indicated or required.
   2. Use cast iron boxes for damp or wet locations; furnish with compatible weatherproof gasketed covers.
   3. Use cast iron boxes where exposed galvanized steel rigid metal conduit is used.
   4. Use suitable masonry type boxes where flush-mounted in masonry walls.
   5. Use raised covers suitable for the type of wall construction and device configuration where required.
   6. Use shallow boxes where required by the type of wall construction.
   7. Do not use "through-wall" boxes designed for access from both sides of wall.

8. Sheet-Steel Boxes: Comply with NEMA OS 1, and list and label as complying with UL 514A.
9. Cast Metal Boxes: Comply with NEMA FB 1, and list and label as complying with UL 514A; furnish with threaded hubs.
10. Boxes for Supporting Luminaires and Ceiling Fans: Listed as suitable for the type and weight of load to be supported; furnished with fixture stud to accommodate mounting of luminaire where required.
11. Boxes for Ganged Devices: Use multigang boxes of single-piece construction. Do not use field-connected gangable boxes unless specifically indicated or permitted.
12. Wall Plates: Comply with Section 262726.
13. Manufacturers:
    a. Cooper Crouse-Hinds, a division of Eaton Corporation: www.cooperindustries.com/#sle.
    b. Hubbell Incorporated; Bell Products: www.hubbell-rtb.com/#sle.
    c. Hubbell Incorporated; RACO Products: www.hubbell-rtb.com/#sle.
    d. O-Z/Gedney, a brand of Emerson Electric Co: www.emerson.com/#sle.
    e. Thomas & Betts Corporation: www.tnb.com/#sle.
    f. Substitutions: See Section 016000 - Product Requirements.

C. Cabinets and Enclosures, Including Junction and Pull Boxes Larger Than 100 cubic inches:
1. Comply with NEMA EN 10250, and list and label as complying with UL 50 and UL 50E, or UL 508A.
2. NEMA EN 10250 Environment Type, Unless Otherwise Indicated:
    a. Indoor Clean, Dry Locations: Type 1, painted steel.
    b. Outdoor Locations: Type 3R, painted steel.
    c. Wet, Damp, or Corrosive Locations: Type 4X, stainless steel or fiberglass.
3. Junction and Pull Boxes Larger Than 100 cubic inches:
    a. Provide screw-cover or hinged-cover enclosures unless otherwise indicated.
    b. Boxes 6 square feet and Larger: Provide sectionalized screw-cover or hinged-cover enclosures.
4. Cabinets and Hinged-Cover Enclosures, Other Than Junction and Pull Boxes:
    a. Provide lockable hinged covers, all locks keyed alike unless otherwise indicated.
    b. Back Panels: Painted steel, removable.
    c. Terminal Blocks: Provide voltage/current ratings and terminal quantity suitable for purpose indicated, with 25 percent spare terminal capacity.
5. Finish for Painted Steel Enclosures: Manufacturer's standard grey unless otherwise indicated.
6. Manufacturers:
    a. Cooper B-Line, a division of Eaton Corporation: www.cooperindustries.com/#sle.
    b. Hoffman, a brand of Pentair Technical Products: www.hoffmanonline.com/#sle.
    c. Hubbell Incorporated; Wiegmann Products: www.hubbell-wiegmann.com/#sle.
    d. Substitutions: See Section 016000 - Product Requirements.

PART 3 EXECUTION

3.01 EXAMINATION

A. Verify that field measurements are as indicated.

B. Verify that mounting surfaces are ready to receive boxes.

C. Verify that conditions are satisfactory for installation prior to starting work.

3.02 INSTALLATION

A. Install products in accordance with manufacturer's instructions.

B. Perform work in a neat and workmanlike manner in accordance with NECA 1 and, where applicable, NECA 130.

C. Arrange equipment to provide minimum clearances in accordance with manufacturer's instructions and NFPA 70.

D. Provide separate boxes for emergency power and normal power systems.

E. Provide separate boxes for line voltage and low voltage systems.

F. Flush-mount boxes in finished areas.

G. Boxes may be surface-mounted where exposed conduits are permitted.

H. Box Locations:
   1. Locate boxes to be accessible. Provide access panels in accordance with Section 083100.
   2. Unless dimensioned, box locations indicated are approximate.
      a. Owner must approve any adjustment to box locations for wall devices.
   3. Locate boxes for devices installed under other sections:
      a. Switches, Receptacles, and Other Wiring Devices: Comply with Section 262726.
      b. Communications Systems Outlets: Comply with Section 271000.
   4. Locate boxes so that wall plates do not span different building finishes.
   5. Locate boxes so that wall plates do not cross masonry joints.
   6. Unless otherwise indicated, where multiple outlet boxes are installed at the same location at different mounting heights, install along a common vertical center line.
   7. Do not install flush-mounted boxes on opposite sides of walls back-to-back. Provide minimum 6 inches horizontal separation unless otherwise indicated.
   8. Acoustic-Rated Walls: Do not install flush-mounted boxes on opposite sides of walls back-to-back; provide minimum 24 inches horizontal separation.
   9. Fire Resistance Rated Walls: Install flush-mounted boxes such that the required fire resistance will not be reduced.
      a. Do not install flush-mounted boxes on opposite sides of walls back-to-back; provide minimum 24 inches separation where wall is constructed with individual noncommunicating stud cavities or protect both boxes with listed putty pads.
      b. Do not install flush-mounted boxes with area larger than 16 square inches or such that the total aggregate area of openings exceeds 100 square inches for any 100 square feet of wall area.
   10. Locate junction and pull boxes to facilitate installation of conductors, and to limit conduit length and/or number of bends between pulling points in accordance with Section 260534.
   11. Locate junction and pull boxes in the following areas:
      a. Concealed above accessible suspended ceilings.
      b. Within joists in areas with no ceiling.
      c. Electrical rooms.
      d. Mechanical equipment rooms.

I. Box Supports:
   1. Secure and support boxes in accordance with NFPA 70 and Section 260529 using suitable supports and methods approved by the authority having jurisdiction.
   2. Provide independent support from building structure. Do not provide support from piping, ductwork, or other systems.
   3. Installation Above Suspended Ceilings: Do not provide support from ceiling grid or ceiling support system.
   4. Use far-side support to secure flush-mounted boxes supported from single stud in hollow stud walls. Replace supports for boxes that permit excessive movement.

J. Install boxes plumb and level.

K. Flush-Mounted Boxes:
   1. Install boxes in noncombustible materials such as concrete, tile, gypsum, plaster, etc. so that front edge of box or associated raised cover is not set back from finished surface more than 1/4 inch or does not project beyond finished surface.

2. Install boxes in combustible materials such as wood so that front edge of box or associated raised cover is flush with finished surface.

L. Floor-Mounted Cabinets: Mount on properly sized 4 inch high concrete pad constructed in accordance with Section 033000.

M. Install boxes as required to preserve insulation integrity.

N. Install permanent barrier between ganged wiring devices when voltage between adjacent devices exceeds 300 V.

O. Install firestopping to preserve fire resistance rating of partitions and other elements, using materials and methods specified in Section 078400.

P. Close unused box openings.

Q. Install blank wall plates on junction boxes and on outlet boxes with no devices or equipment installed or designated for future use.

R. Provide grounding and bonding in accordance with Section 260526.

S. Identify boxes in accordance with Section 260553.

3.03 CLEANING

A. Clean interior of boxes to remove dirt, debris, plaster and other foreign material.

3.04 PROTECTION

A. Immediately after installation, protect boxes from entry of moisture and foreign material until ready for installation of conductors.

END OF SECTION 260533.16

SECTION 260553
IDENTIFICATION FOR ELECTRICAL SYSTEMS

PART 1 GENERAL

1.01 SECTION INCLUDES

A. Electrical identification requirements.

B. Identification nameplates and labels.

C. Wire and cable markers.

D. Voltage markers.

1.02 RELATED REQUIREMENTS

A. Section 260519 - Low-Voltage Electrical Power Conductors and Cables: Color coding for power conductors and cables 600 V and less; vinyl color coding electrical tape.

1.03 REFERENCE STANDARDS

A. NFPA 70 - National Electrical Code.

B. NFPA 70E - Standard for Electrical Safety in the Workplace.

1.04 ADMINISTRATIVE REQUIREMENTS

A. Coordination:
   1. Verify final designations for equipment, systems, and components to be identified prior to fabrication of identification products.

B. Sequencing:
   1. Do not conceal items to be identified, in locations such as above suspended ceilings, until identification products have been installed.
   2. Do not install identification products until final surface finishes and painting are complete.

1.05 SUBMITTALS

A. No submittals required.

1.06 QUALITY ASSURANCE

A. Comply with requirements of NFPA 70.

1.07 FIELD CONDITIONS

A. Do not install adhesive products when ambient temperature is lower than recommended by manufacturer.

PART 2 PRODUCTS

2.01 IDENTIFICATION REQUIREMENTS

A. Identification for Equipment:
   1. Use lamicoid/phenolic identification nameplate to identify each piece of electrical distribution and control equipment and associated sections, compartments, and components.
   2. Use identification label to identify disconnect location for equipment with remote disconnecting means.
   3. Use identification label on inside of door at each fused switch to identify required NEMA fuse class and size.
   4. Use identification label on inside of door at each motor controller to identify nameplate horsepower, full load amperes, code letter, service factor, voltage, and phase of motor(s) controlled.
   5. Use identification label to identify overcurrent protective devices for branch circuits serving fire alarm circuits. Identify with text "FIRE ALARM CIRCUIT".

B. Identification for Conductors and Cables:
   1. Color Coding for Power Conductors 600 V and Less: Comply with Section 260519.

2. Use identification label to identify color code for ungrounded and grounded power conductors at each piece of feeder or branch-circuit distribution equipment.
3. Use wire and cable markers to identify circuit number or other designation indicated for power, control, and instrumentation conductors and cables at the following locations:
    a. At each source and load connection.
    b. Within boxes when more than one circuit is present.
    c. Within equipment enclosures when conductors and cables enter or leave the enclosure.
4. Use underground warning tape to identify direct buried cables.

C. Identification for Raceways:
1. Use voltage markers to identify highest voltage present for accessible conduits at maximum intervals of 20 feet.
2. Use voltage markers, color-coded bands, or factory-painted conduits to identify systems other than normal power system for accessible conduits.
    a. Maximum Intervals: 20 feet.
    b. Color-Coded Bands: Use vinyl color coding electrical tape to mark bands 3 inches wide.
        1) Color Code:
            (a) Fire Alarm System: Red.
            (b) Telephone System: White.
            (c) HVAC Control System: Green.
            (d) PA System: Grey.
            (e) Cat5e Data System: Blue.
            (f) Cat6 Data System: Violet.
            (g) Security System: White.
            (h) CCTV System: Yellow
        2) Vinyl Color Coding Electrical Tape: Comply with Section 260519.
3. Use voltage markers to identify highest voltage present for wireways at maximum intervals of 20 feet.

D. Identification for Boxes and Enclosures larger than 100 cubic inches:
1. Use voltage markers to identify highest voltage present in power and lighting systems.
2. Use color coded vinyl labels with printed system name to identify specified systems.
    a. Vinyl Tape Color Code:
        1) Fire Alarm System: Red.
        2) Telephone System: White.
        3) HVAC Control System: Green.
        4) PA System: Grey.
        5) Data System: Blue.
        6) Security System: White.
        7) CCTV System: Yellow
3. Use warning labels to identify electrical hazards with the word message "DANGER; HIGH VOLTAGE; KEEP OUT".

E. Identification for Devices:
1. Use identification label to identify fire alarm system device number.
    a. For fire alarm devices concealed above suspended ceilings, provide identification labeling on a white, standard size, single-gang, LED indicator cover plate flush mounted to ceiling tile below device location. Install a standard, signle-gang switch box in the ceiling to attach blank cover plate.
2. Use identification label to identify serving branch circuit for all receptacles.
    a. For receptacles in public areas, provide identification on inside surface of wallplate.

F. Identification for Luminaires:

1. Use permanent red dot on luminaire frame to identify luminaires connected to emergency power system.

2.02 IDENTIFICATION NAMEPLATES AND LABELS

A. Identification Nameplates:
   1. Materials:
      a. Indoor Clean, Dry Locations: Use plastic nameplates.
      b. Outdoor Locations: Use plastic nameplates suitable for exterior use.
   2. Plastic Nameplates: Two-layer or three-layer laminated electrically non-conductive phenolic with beveled edges; minimum thickness of 1/8 inch; engraved text.
      a. Minimum Text Size: 1/2 inch
   3. Mounting Holes for Mechanical Fasteners: Two, centered on sides for sizes up to 1 inch high; Four, located at corners for larger sizes.

B. Identification Labels:
   1. Manufacturers:
      a. Brady Corporation: www.bradyid.com.
      b. Brother International Corporation: www.brother-usa.com/#sle.
      c. Panduit Corp: www.panduit.com/#sle.
      d. Substitutions: See Section 016000 - Product Requirements.
   2. Materials: Use self-adhesive laminated plastic labels; UV, chemical, water, heat, and abrasion resistant.
      a. Use only for indoor locations.
   3. Text: Use machine-printed text. Do not use handwritten text.

C. Format for Receptacle Identification:
   1. Legend: Power source and circuit number or other designation indicated.
   2. Text: All capitalized.
   3. Minimum Text Height: 3/16 inch.
   4. Color: Black text on clear background.

D. Format for Fire Alarm Device Identification:
   1. Legend: Fire Alarm Device ID indicated on drawings.
   2. Text: All capitalized unless otherwise indicated.
   3. Minimum Text Height: 3/16 inch.
   4. Color: Red text on white background.

2.03 WIRE AND CABLE MARKERS

A. Manufacturers:
   1. Brady Corporation: www.bradyid.com.
   2. HellermannTyton: www.hellermanntyton.com/#sle.
   3. Panduit Corp: www.panduit.com/#sle.
   4. Substitutions: See Section 016000 - Product Requirements.

B. Markers for Conductors and Cables: Use wrap-around self-adhesive vinyl self-laminating type markers suitable for the conductor or cable to be identified.

C. Markers for Conductor and Cable Bundles: Use plastic marker tags secured by nylon cable ties.

D. Legend: Power source and circuit number or other designation indicated.

E. Text: Use machine-printed text, all capitalized unless otherwise indicated.
   1. Do not use handwritten text.

F. Minimum Text Height: 1/8 inch.

G. Color: Black text on white background unless otherwise indicated.

2.04 VOLTAGE MARKERS

A. Manufacturers:
   1. Brady Corporation: www.bradyid.com.
   2. Substitutions: See Section 016000 - Product Requirements.

B. Markers for Conduits: Use factory pre-printed self-adhesive vinyl type markers.

C. Markers for Boxes and Equipment Enclosures: Use factory pre-printed self-adhesive vinyl type markers.

D. Minimum Size:
   1. Markers for Equipment: 1 1/8 by 4 1/2 inches.
   2. Markers for Conduits: As recommended by manufacturer for conduit size to be identified.
   3. Markers for Pull Boxes: 1 1/8 by 4 1/2 inches.
   4. Markers for Junction Boxes: 1/2 by 2 1/4 inches.

E. Legend:
   1. Markers for Voltage Identification: Highest voltage present.

F. Color: Black text on orange background.

PART 3 EXECUTION

3.01 PREPARATION

A. Clean surfaces to receive adhesive products according to manufacturer's instructions.

3.02 INSTALLATION

A. Install products in accordance with manufacturer's instructions.

B. Install identification products to be plainly visible for examination, adjustment, servicing, and maintenance. Locate products as follows:
   1. Surface-Mounted Equipment: Enclosure front.
   2. Flush-Mounted Equipment: Enclosure front.
   3. Free-Standing Equipment: Enclosure front; also enclosure rear for equipment with rear access.
   4. Elevated Equipment: Legible from the floor or working platform.
   5. Interior Components: Legible from the point of access.
   6. Conduits: Legible from the floor.
   7. Conductors and Cables: Legible from the point of access.
   8. Devices: Outside face of cover.

C. Install identification products centered, level, and parallel with lines of item being identified.

D. Secure nameplates to exterior surfaces of enclosures using stainless steel screws, rivets, self-adhesive backing, or epoxy cement and to interior surfaces using self-adhesive backing or epoxy cement.

E. Install self-adhesive labels and markers to achieve maximum adhesion, with no bubbles or wrinkles and edges properly sealed.

3.03 FIELD QUALITY CONTROL

A. See Section 014000 - Quality Requirements, for additional requirements.

B. Replace self-adhesive labels and markers that exhibit bubbles, wrinkles, curling or other signs of improper adhesion.

END OF SECTION 260553

SECTION 260923
LIGHTING CONTROL DEVICES

PART 1 GENERAL

1.01 SECTION INCLUDES

A. Low-voltage digital lighting control systems.

B. Line-voltage switches and occupancy sensors.

1.02 RELATED REQUIREMENTS

A. Section 260526 - Grounding and Bonding for Electrical Systems.

B. Section 260529 - Hangers and Supports for Electrical Systems

C. Section 260533.16 - Boxes for Electrical Systems.

D. Section 260553 - Identification for Electrical Systems: Identification products and requirements.

E. Section 262726 - Wiring Devices: Devices for manual control of lighting, including wall switches, wall dimmers, and fan speed controllers.

F. Section 265100 - Interior Lighting.

G. Section 265600 - Exterior Lighting.

1.03 REFERENCE STANDARDS

A. NECA 1 - Standard for Good Workmanship in Electrical Construction.

B. NECA 130 - Standard for Installing and Maintaining Wiring Devices.

C. NEMA 410 - Performance Testing for Lighting Controls and Switching Devices with Electronic Drivers and Discharge Ballasts.

D. NEMA EN 10250 - Enclosures for Electrical Equipment (1000 Volts Maximum).

E. NFPA 70 - National Electrical Code.

F. UL 916 - Energy Management Equipment.

G. UL 1472 - Solid-State Dimming Controls.

1.04 ADMINISTRATIVE REQUIREMENTS

A. Coordination:
   1. Coordinate the placement of lighting control devices with millwork, furniture, equipment, etc. installed under other sections or by others.
   2. Coordinate the placement of wall switch occupancy sensors with actual installed door swings.
   3. Coordinate the placement of occupancy sensors with millwork, furniture, equipment or other potential obstructions to motion detection coverage installed under other sections or by others.
   4. Notify Architect of any conflicts or deviations from Contract Documents to obtain direction prior to proceeding with work.

B. Sequencing:
   1. Do not install lighting control devices until final surface finishes and painting are complete.

1.05 SUBMITTALS

A. See Section 013000 - Administrative Requirements, for submittal procedures.

B. Product Data: Include manufacturer's standad data sheets to include: ratings, configurations, standard wiring diagrams, dimensions, colors, service condition requirements, and installed features.
   1. Occupancy Sensors: Include detailed motion detection coverage range diagrams.

C. Maintenance Materials: Furnish the following for Owner's use in maintenance of project.
   1. See Section 016000 - Product Requirements, for additional provisions.

2. Provide One WattStopper LMCT-100 Digital Wireless Configuration Tools.

1.06 QUALITY ASSURANCE

A. Comply with requirements of NFPA 70.

B. Product Listing Organization Qualifications: An organization recognized by OSHA as a Nationally Recognized Testing Laboratory (NRTL) and acceptable to authorities having jurisdiction.

1.07 DELIVERY, STORAGE, AND PROTECTION

A. Store products in a clean, dry space in original manufacturer's packaging in accordance with manufacturer's written instructions until ready for installation.

1.08 FIELD CONDITIONS

A. Maintain field conditions within manufacturer's required service conditions during and after installation.

PART 2 PRODUCTS

2.01 LIGHTING CONTROL DEVICES - GENERAL REQUIREMENTS

A. Provide products listed, classified, and labeled as suitable for the purpose intended.

B. Unless specifically indicated to be excluded, provide all required conduit, wiring, connectors, hardware, components, accessories, etc. as required for a complete operating system.

C. Products for Switching of Electronic Ballasts/Drivers: Tested and rated to be suitable for peak inrush currents specified in NEMA 410.

2.02 LOW-VOLTAGE LIGHTING CONTROL SYSTEMS

A. Manufacturer:
   1. WattStopper: www.wattstopper.com
      a. System:
         1) Digital Lighting Management (DLM)
   2. Substitutions: Not Permitted.

2.03 LINE-VOLTAGE SWITCHES AND OCCUPANCY SENSORS

A. Manufacturers:
   1. Hubbell Wiring Devices - Kellems (H-Moss): www.hubbell-wiring.com
   2. Substitutions: Not permitted.
   3. Source Limitations: Furnish products produced by a single manufacturer.

B. Combination Wall Switch-Occupancy Sensor:
   1. Hubbell Wiring Devices:
      a. Catalog Number: AD1277.
      b. Color: Ivory.
      c. Single or Dual Circuit, as noted on drawings.

PART 3 EXECUTION

3.01 EXAMINATION

A. Verify that field measurements are as indicated.

B. Verify that outlet boxes are installed in proper locations and at proper mounting heights and are properly sized to accommodate devices and conductors in accordance with NFPA 70.

C. Verify that openings for outlet boxes are neatly cut and will be completely covered by devices or wall plates.

D. Verify that final surface finishes are complete, including painting.

E. Verify that branch circuit wiring installation is completed, tested, and ready for connection to lighting control devices.

F. Verify that the service voltage and ratings of lighting control devices are appropriate for the service voltage and load requirements at the location to be installed.

G. Verify that conditions are satisfactory for installation prior to starting work.

3.02 PREPARATION

A. Provide extension rings to bring outlet boxes flush with finished surface.

B. Clean dirt, debris, plaster, and other foreign materials from outlet boxes.

3.03 INSTALLATION

A. Install lighting control devices in accordance with NECA 1 (general workmanship) and, where applicable, NECA 130, including mounting heights specified in those standards unless otherwise indicated.

B. Coordinate locations of outlet boxes provided under Section 260533.16 as required for installation of lighting control devices provided under this section.
   1. Mounting Heights: As indicated on the drawings.
   2. Orient outlet boxes for vertical installation of lighting control devices unless otherwise indicated.
   3. Locate wall switch occupancy sensors on strike side of door with edge of wall plate 4 inches from edge of door frame. Where locations are indicated otherwise, notify Architect to obtain direction prior to proceeding with work.

C. Install lighting control devices in accordance with manufacturer's instructions and the following guidance:
   1. Utilize Wattstopper DLM Device Model LMDC-100 where ceilings are 8 foot to 12 foot above finished floor.
   2. Utilize Wattstopper DLM Device Model LMDX-100 where ceilings are greater than 12 foot above finished floor. Mount on walls 8 foot to 12 foot above finsihed floor.

D. Connect lighting control device grounding terminal or conductor to branch circuit equipment grounding conductor and to outlet box with bonding jumper.

E. Install lighting control devices plumb and level, and held securely in place.

F. Where required and not furnished with lighting control device, provide wall plate in accordance with Section 262726.

G. Provide required supports in accordance with Section 260529.

H. Install lighting control devices and associated wall plates to fit completely flush to mounting surface with no gaps and rough opening completely covered without strain on wall plate. Repair or reinstall improperly installed outlet boxes or improperly sized rough openings.

I. Identify lighting control devices in accordance with Section 260553.

J. Occupancy Sensor Locations:
   1. Location Adjustments: Within the design intent, reasonably minor adjustments to locations may be made in order to optimize coverage and avoid conflicts or problems affecting coverage.
   2. Locate dual technology passive infrared/ultrasonic occupancy sensors a minimum of 4 feet from air supply ducts or other sources of heavy air flow and as per manufacturer's recommendations, in order to minimize false triggers.

K. Lamp Burn-In: Operate lamps at full output for minimum of 100 hours or prescribed period per manufacturer's recommendations prior to use with any dimming controls. Replace lamps that fail prematurely due to improper lamp burn-in.

L. Where indicated or required, provide cabinet or enclosure in accordance with Section 260533.16 for mounting of lighting control device system components.

3.04 FIELD QUALITY CONTROL

A. See Section 014000 - Quality Requirements, for additional requirements.

B. Inspect each lighting control device for damage and defects.

C. Test occupancy sensors to verify proper operation, including time delays and ambient light thresholds where applicable. Verify optimal coverage for entire room or area. Record test results in written report to be included with submittals.

D. Correct wiring deficiencies and replace damaged or defective lighting control devices.

3.05 ADJUSTING

A. Adjust devices and wall plates to be flush and level.

B. Adjust occupancy sensor settings, as necessary, to minimize undesired activations and to achieve desired function.

3.06 CLEANING

A. Clean exposed surfaces to remove dirt, paint, or other foreign material and restore to match original factory finish.

3.07 CLOSEOUT ACTIVITIES

A. Demonstration: Demonstrate proper operation of lighting control devices to Architect, and correct deficiencies or make adjustments as directed.

B. Training: Train Owner's personnel on operation, adjustment, programming, and maintenance of lighting control devices.

1. Use operation and maintenance manual as training reference, supplemented with additional training materials as required.
2. Location: At project site.

END OF SECTION 260923

SECTION 262726
WIRING DEVICES

PART 1 GENERAL

1.01 SECTION INCLUDES

A. Wall switches.

B. Receptacles.

C. Wall plates.

1.02 RELATED REQUIREMENTS

A. Section 260526 - Grounding and Bonding for Electrical Systems.

B. Section 260533.16 - Boxes for Electrical Systems.

C. Section 260553 - Identification for Electrical Systems: Identification products and requirements.

1.03 REFERENCE STANDARDS

A. NECA 1 - Standard for Good Workmanship in Electrical Construction.

B. NECA 130 - Standard for Installing and Maintaining Wiring Devices.

C. NEMA WD 1 - General Color Requirements for Wiring Devices.

D. NEMA WD 6 - Wiring Devices - Dimensional Specifications.

E. NFPA 70 - National Electrical Code.

F. UL 20 - General-Use Snap Switches.

G. UL 498 - Attachment Plugs and Receptacles.

H. UL 514D - Cover Plates for Flush-Mounted Wiring Devices.

I. UL 943 - Ground-Fault Circuit-Interrupters.

1.04 ADMINISTRATIVE REQUIREMENTS

A. Coordination:
   1. Coordinate the placement of outlet boxes with millwork, furniture, equipment, etc. installed under other sections or by others.
   2. Coordinate wiring device ratings and configurations with the electrical requirements of actual equipment to be installed.
   3. Coordinate the placement of outlet boxes for wall switches with actual installed door swings.
   4. Coordinate the installation and preparation of uneven surfaces, such as split face block, to provide suitable surface for installation of wiring devices.
   5. Notify Architect of any conflicts or deviations from Contract Documents to obtain direction prior to proceeding with work.

B. Sequencing:
   1. Do not install wiring devices until final surface finishes and painting are complete.

1.05 SUBMITTALS

A. No submittals required.

1.06 QUALITY ASSURANCE

A. Comply with requirements of NFPA 70.

B. Products: Listed, classified, and labeled as suitable for the purpose intended.

C. Product Listing Organization Qualifications: An organization recognized by OSHA as a Nationally Recognized Testing Laboratory (NRTL) and acceptable to authorities having jurisdiction.

1.07 DELIVERY, STORAGE, AND PROTECTION

A. Store in a clean, dry space in original manufacturer's packaging until ready for installation.

PART 2 PRODUCTS

2.01 WIRING DEVICE FINISHES

A. Provide wiring device finishes as described below unless otherwise indicated.

B. Wiring Devices Installed in Finished Spaces: Ivory withivory nylon wall plate.

C. Wiring Devices Installed in Unfinished Spaces: Ivory withivory nylon wall plate.

D. Wiring Devices Installed in Wet or Damp Locations: Ivory with specified weatherproof cover.

E. Wiring Devices Connected to Emergency Power: Red with red nylon wall plate.

F. Wiring Devices Connected to TVSS Power Panels: Grey with grey nylon wall plate.

2.02 WALL SWITCHES

A. Wall Switches - General Requirements: AC only, quiet operating, general-use snap switches with silver alloy contacts, complying with NEMA WD 1 and NEMA WD 6, and listed as complying with UL 20; types as indicated on the drawings.
   1. Wiring Provisions: Terminal screws for side wiring and screw actuated binding clamp for back wiring with separate ground terminal screw.

B. Standard Wall Switches: Industrial specification grade, 20 A, 120/277 V with standard toggle type switch actuator and maintained contacts; single pole single throw, double pole single throw, three way, or four way as indicated on the drawings.

2.03 RECEPTACLES

A. Receptacles - General Requirements: Self-grounding, complying with NEMA WD 1 and NEMA WD 6, and listed as complying with UL 498; types as indicated on the drawings.
   1. Wiring Provisions: Terminal screws for side wiring or screw actuated binding clamp for back wiring with separate ground terminal screw.
   2. NEMA configurations specified are according to NEMA WD 6.

B. Convenience Receptacles:
   1. Standard Convenience Receptacles: Commercial specification grade, 20A, 125V, NEMA 5-20R; single or duplex as indicated on the drawings.
   2. Weather Resistant Convenience Receptacles: Industrial specification grade, 20A, 125V, NEMA 5-20R, listed and labeled as weather resistant type complying with UL 498 Supplement SD suitable for installation in damp or wet locations; single or duplex as indicated on the drawings.

C. GFCI Receptacles:
   1. GFCI Receptacles - General Requirements: Self-testing, with feed-through protection and light to indicate ground fault tripped condition and loss of protection; listed as complying with UL 943, class A.
      a. Provide test and reset buttons of same color as device.
   2. Standard GFCI Receptacles: Industrial specification grade, duplex, 20A, 125V, NEMA 5-20R, rectangular decorator style.
   3. Weather Resistant GFCI Receptacles: Industrial specification grade, duplex, 20A, 125V, NEMA 5-20R, rectangular decorator style, listed and labeled as weather resistant type complying with UL 498 Supplement SD suitable for installation in damp or wet locations.

2.04 WALL PLATES

A. Wall Plates: Comply with UL 514D.
   1. Configuration: One piece cover as required for quantity and types of corresponding wiring devices.
   2. Size: Standard.
   3. Screws: Metal with slotted heads finished to match wall plate finish.

B. Nylon Wall Plates: Smooth finish, high-impact thermoplastic.

C. Stainless Steel Wall Plates: Brushed satin finish, Type 302 stainless steel.

D. Weatherproof Covers for Wetor Damp Locations: Gasketed, cast aluminum, with hinged lockable cover and corrosion-resistant screws; listed as suitable for use in wet locations while in use with attachment plugs connected and identified as extra-duty type.

PART 3 EXECUTION

3.01 EXAMINATION

A. Verify that field measurements are as indicated.

B. Verify that outlet boxes are installed in proper locations and at proper mounting heights and are properly sized to accommodate devices and conductors in accordance with NFPA 70.

C. Verify that wall openings are neatly cut and will be completely covered by wall plates.

D. Verify that final surface finishes are complete, including painting.

E. Verify that floor boxes are adjusted properly.

F. Verify that branch circuit wiring installation is completed, tested, and ready for connection to wiring devices.

G. Verify that conditions are satisfactory for installation prior to starting work.

3.02 PREPARATION

A. Provide extension rings to bring outlet boxes flush with finished surface.

B. Clean dirt, debris, plaster, and other foreign materials from outlet boxes.

3.03 INSTALLATION

A. Perform work in accordance with NECA 1 (general workmanship) and, where applicable, NECA 130, including mounting heights specified in those standards unless otherwise indicated.

B. Coordinate locations of outlet boxes provided under Section 260533.16 as required for installation of wiring devices provided under this section.
   1. Mounting Heights: As indicated on the drawings.
   2. Orient outlet boxes for vertical installation of wiring devices unless otherwise indicated.
   3. Where multiple receptacles, wall switches, or wall dimmers are installed at the same location and at the same mounting height, gang devices together under a common wall plate.
   4. Locate wall switches on strike side of door with edge of wall plate 4 inches from edge of door frame. Where 4 inches is not possible due, notify Architect to obtain direction prior to proceeding with work.
   5. Locate receptacles for electric drinking fountains concealed behind drinking fountain according to manufacturer's instructions.

C. Install wiring devices in accordance with manufacturer's instructions.

D. Install permanent barrier between ganged wiring devices when voltage between adjacent devices exceeds 300 V.

E. Connect wiring devices using pigtails not less than 6 inches long. Do not connect more than one conductor to wiring device terminals.

F. Connect wiring devices by wrapping conductor clockwise 3/4 turn around screw terminal and tightening to proper torque specified by the manufacturer. Do not use push-in pressure terminals that do not rely on screw-actuated binding.

G. Connect wiring device grounding terminal to branch circuit equipment grounding conductor and to outlet box with bonding jumper.

H. Provide GFCI receptacles with integral GFCI protection at each location indicated. Do not use feed-through wiring to protect downstream devices.

I. Where split-wired duplex receptacles are indicated, remove tabs connecting top and bottom receptacles.

J. Install wiring devices plumb and level with mounting yoke held rigidly in place.

K. Install wall switches with OFF position down.

L. Install vertically mounted receptacles with grounding pole on bottom and horizontally mounted receptacles with grounding pole on left.

M. Install wall plates to fit completely flush to wall with no gaps and rough opening completely covered without strain on wall plate. Repair or reinstall improperly installed outlet boxes or improperly sized rough openings.

N. Install blank wall plates on junction boxes and on outlet boxes with no wiring devices installed or designated for future use.

O. Identify wiring devices in accordance with Section 260553.

3.04 FIELD QUALITY CONTROL

A. See Section 014000 - Quality Requirements, for additional requirements.

B. Inspect each wiring device for damage and defects.

C. Operate each wall switch with circuit energized to verify proper operation.

D. Test each receptacle to verify operation and proper polarity.

E. Test each GFCI receptacle for proper tripping operation according to manufacturer's instructions.

F. Correct wiring deficiencies and replace damaged or defective wiring devices.

3.05 ADJUSTING

A. Adjust devices and wall plates to be flush and level.

3.06 CLEANING

A. Clean exposed surfaces to remove dirt, paint, or other foreign material and restore to match original factory finish.

END OF SECTION 262726

SECTION 265100
INTERIOR LIGHTING

PART 1 GENERAL

1.01 SECTION INCLUDES

A. Interior luminaires.

B. Emergency lighting units.

C. Exit signs.

D. Ballasts and drivers.

E. Lamps.

F. Accessories.

1.02 RELATED REQUIREMENTS

A. Section 260529 - Hangers and Supports for Electrical Systems.

B. Section 260533.16 - Boxes for Electrical Systems.

C. Section 260553 - Identification for Electrical Systems: Identification products and requirements.

D. Section 260919 - Enclosed Contactors: Lighting contactors.

E. Section 262726 - Wiring Devices: Manual wall switches and wall dimmers.

1.03 REFERENCE STANDARDS

A. IEC 60529 - Degrees of Protection Provided by Enclosures (IP Code).

B. IEEE C62.41.2 - IEEE Recommended Practice on Characterization of Surges in Low-Voltage (1000 V and Less) AC Power Circuits.

C. IES LM-79 - Approved Method: Optical and Electrical Measurements of Solid-State Lighting Products.

D. IES LM-80 - Approved Method: Measuring Maintenance of Light Output Characteristics of Solid-State Light Sources.

E. NECA 1 - Standard for Good Workmanship in Electrical Construction.

F. NECA/IESNA 500 - Standard for Installing Indoor Lighting Systems.

G. NEMA 410 - Performance Testing for Lighting Controls and Switching Devices with Electronic Drivers and Discharge Ballasts.

H. NEMA LE 4 - Recessed Luminaires, Ceiling Compatibility.

I. NFPA 70 - National Electrical Code.

J. NFPA 101 - Life Safety Code.

K. UL 924 - Emergency Lighting and Power Equipment.

L. UL 935 - Fluorescent-Lamp Ballasts.

M. UL 1598 - Luminaires.

N. UL 8750 - Light Emitting Diode (LED) Equipment for Use in Lighting Products.

1.04 ADMINISTRATIVE REQUIREMENTS

A. Coordination:

1. Coordinate the installation of luminaires with mounting surfaces installed under other sections or by others. Coordinate the work with placement of supports, anchors, etc. required for mounting. Coordinate compatibility of luminaires and associated trims with mounting surfaces at installed locations.

2. Coordinate the placement of luminaires with structural members, ductwork, piping, equipment, diffusers, fire suppression system components, and other potential conflicts installed under other sections or by others.
3. Coordinate the placement of exit signs with furniture, equipment, signage or other potential obstructions to visibility installed under other sections or by others.
4. Notify Architect of any conflicts or deviations from Contract Documents to obtain direction prior to proceeding with work.

1.05 SUBMITTALS

A. See Section 013000 - Administrative Requirements, for submittal procedures.

B. Product Data: Provide manufacturer's standard catalog pages and data sheets including detailed information on luminaire construction, dimensions, ratings, finishes, mounting requirements, listings, service conditions, photometric performance, installed accessories, and ceiling compatibility; include model number nomenclature clearly marked with all proposed features.

C. Manufacturer's Installation Instructions: Indicate application conditions and limitations of use stipulated by product testing agency. Include instructions for storage, handling, protection, examination, preparation, and installation of product.

D. Operation and Maintenance Data: Instructions for each product including information on replacement parts.

1.06 QUALITY ASSURANCE

A. Comply with requirements of NFPA 70.

B. Product Listing Organization Qualifications: An organization recognized by OSHA as a Nationally Recognized Testing Laboratory (NRTL) and acceptable to authorities having jurisdiction.

1.07 DELIVERY, STORAGE, AND PROTECTION

A. Receive, handle, and store products according to manufacturer's written instructions.

B. Keep products in original manufacturer's packaging and protect from damage until ready for installation.

PART 2 PRODUCTS

2.01 LUMINAIRE TYPES

A. Furnish products as indicated in luminaire schedule included on the drawings.

2.02 LUMINAIRES

A. Provide products that comply with requirements of NFPA 70.

B. Provide products that are listed and labeled as complying with UL 1598, where applicable.

C. Provide products listed, classified, and labeled as suitable for the purpose intended.

D. Unless otherwise indicated, provide complete luminaires including lamp(s) and all sockets, ballasts, reflectors, lenses, housings and other components required to position, energize and protect the lamp and distribute the light.

E. Unless specifically indicated to be excluded, provide all required conduit, boxes, wiring, connectors, hardware, supports, trims, accessories, etc. as necessary for a complete operating system.

F. Provide products suitable to withstand normal handling, installation, and service without any damage, distortion, corrosion, fading, discoloring, etc.

G. Recessed Luminaires:
1. Ceiling Compatibility: Comply with NEMA LE 4.
2. Luminaires Recessed in Insulated Ceilings: Listed and labeled as IC-rated, suitable for direct contact with insulation and combustible materials.

3. Air-Handling Recessed Fluorescent Luminaires: Suitable for air supply/return, heat removal, or combination as indicated.

H. LED Luminaires:
1. Components: UL 8750 recognized or listed as applicable.
2. Tested in accordance with IES LM-79 and IES LM-80.
3. LED Estimated Useful Life: Minimum of 50,000 hours at 70 percent lumen maintenance, calculated based on IES LM-80 test data.

I. LED Luminaire Components: UL 8750 recognized or listed as applicable.

2.03 EMERGENCY LIGHTING UNITS

A. Description: Emergency lighting units complying with NFPA 101 and all applicable state and local codes, and listed and labeled as complying with UL 924.

B. Operation: Upon interruption of normal power source or brownout condition exceeding 20 percent voltage drop from nominal, solid-state control automatically switches connected lamps to integral battery power for minimum of 90 minutes of rated emergency illumination, and automatically recharges battery upon restoration of normal power source.

C. Battery:
1. Sealed maintenance-free nickel cadmium unless otherwise indicated.
2. Size battery to supply all connected lamps, including emergency remote heads where indicated.

D. Diagnostics: Provide power status indicator light and accessible integral test switch to manually activate emergency operation.

E. Provide low-voltage disconnect to prevent battery damage from deep discharge.

F. Accessories:
1. Provide compatible accessory mounting brackets where indicated or required to complete installation.

2.04 EXIT SIGNS

A. Description: Exit signs and similar signs for special purpose applications such as area of refuge/rescue assistance.

B. All Exit Signs: Internally illuminated with LEDs; complying with and all applicable state and local codes, and listed and labeled as complying with UL 924.

C. Self-Powered Exit Signs:
1. Operation: Upon interruption of normal power source or brownout condition exceeding 20 percent voltage drop from nominal, solid-state control automatically switches connected lamps to integral battery power for minimum of 90 minutes of rated emergency illumination, and automatically recharges battery upon restoration of normal power source.
2. Battery: Sealed maintenance-free nickel cadmium unless otherwise indicated.
3. Diagnostics: Provide power status indicator light and accessible integral test switch to manually activate emergency operation.
4. Provide low-voltage disconnect to prevent battery damage from deep discharge.

D. Accessories:
1. Provide compatible accessory wire guards where indicated.

2.05 DRIVERS

A. Manufacturers:
1. Alloy LED; www.alloyled.com/#sle.
2. General Electric Company/GE Lighting: www.gelighting.com/#sle.
3. Lutron Electronics Company, Inc; www.lutron.com/#sle.
4. OSRAM Sylvania, Inc: www.osram.us/ds/#sle.
5. Philips Lighting North America Corporation; www.usa.lighting.philips.com/#sle.

6. Substitutions: See Section 016000 - Product Requirements.
7. Manufacturer Limitations: Where possible, for each type of luminaire provide ballasts produced by a single manufacturer.

B. LED Drivers:
1. Dimming Range: Continuous dimming from 100 percent to five percent relative light output unless dimming capability to lower level is indicated, without flicker.
2. Control Compatibility: Fully compatible with the dimming controls to be installed.

2.06 LAMPS

A. Manufacturers:
1. General Electric Company/GE Lighting: www.gelighting.com/#sle.
2. Osram Sylvania: www.sylvania.com/#sle.
3. Philips Lighting North America Corporation; www.usa.lighting.philips.com/#sle.
4. Cree, Inc: www.cree.com.
5. Technical Consumer Products, Inc: www.tcpi.com.
6. Green Creative, LLC: www.gc-lighting.com.
7. Substitutions: See Section 016000 - Product Requirements.
8. Manufacturer Limitations: Where possible, provide lamps produced by a single manufacturer.

B. Lamps - General Requirements:
1. Provide new, compatible, operable LED lamps in each luminaire.
2. Verify compatibility of specified lamps with luminaires to be installed. Where lamps are not specified, provide lamps per luminaire manufacturer's recommendations.
3. Minimum Efficiency: Provide lamps complying with all current applicable federal and state lamp efficiency standards.
4. Color Temperature Consistency: 4000K for each type of LED lamp. Furnish products which are consistent in perceived color temperature. Replace lamps that are determined by the Architect to be inconsistent in perceived color temperature.

2.07 ACCESSORIES

A. Provide accessory plaster frameswhere indicated.

PART 3 EXECUTION

3.01 EXAMINATION

A. Verify that field measurements are as indicated.

B. Verify that outlet boxes are installed in proper locations and at proper mounting heights and are properly sized to accommodate conductors in accordance with NFPA 70.

C. Verify that suitable support frames are installed where required.

D. Verify that branch circuit wiring installation is completed, tested, and ready for connection to luminaires.

E. Verify that conditions are satisfactory for installation prior to starting work.

3.02 PREPARATION

A. Provide extension rings to bring outlet boxes flush with finished surface.

B. Clean dirt, debris, plaster, and other foreign materials from outlet boxes.

3.03 INSTALLATION

A. Coordinate locations of outlet boxes provided under Section 260533.16 as required for installation of luminaires provided under this section.

B. Perform work in accordance with NECA 1 (general workmanship).

C. Install products in accordance with manufacturer's instructions.

D. Install luminaires securely, in a neat and workmanlike manner, as specified in NECA 500 (commercial lighting) and NECA 502 (industrial lighting).

E. Provide required support and attachment in accordance with Section 260529.

F. Install luminaires plumb and square and aligned with building lines and with adjacent luminaires.

G. Suspended Ceiling Mounted Luminaires:
   1. Do not use ceiling tiles to bear weight of luminaires.
   2. Do not use ceiling support system to bear weight of luminaires unless ceiling support system is certified as suitable to do so.
   3. Secure surface-mounted and recessed luminaires to ceiling support channels or framing members or to building structure.
   4. Secure lay-in luminaires to ceiling support channels using listed safety clips at four corners.
   5. See appropriate Division 9 section where suspended grid ceiling is specified for additional requirements.

H. Recessed Luminaires:
   1. Install trims tight to mounting surface with no visible light leakage.
   2. Non-IC Rated Luminaires: Maintain required separation from insulation and combustible materials according to listing.
   3. Luminaires Recessed in Fire-Rated Ceilings: Install using accessories and firestopping materials to meet regulatory requirements for fire rating.

I. Wall-Mounted Luminaires: Unless otherwise indicated, specified mounting heights are to center of luminaire.

J. Install accessories furnished with each luminaire.

K. Bond products and metal accessories to branch circuit equipment grounding conductor.

L. Emergency Lighting Units:
   1. Connect unit to unswitched power from circuit indicated. Bypass local switches, contactors, or other lighting controls.

M. Exit Signs:
   1. Connect unit to unswitched power from circuit indicated. Bypass local switches, contactors, or other lighting controls.

N. Identify luminaires connected to emergency power system in accordance with Section 260553.

O. Install lamps in each luminaire.

P. Lamp Burn-In: Operate lamps at full output for prescribed period per manufacturer's recommendations prior to use with any dimming controls. Replace lamps that fail prematurely due to improper lamp burn-in.

3.04 FIELD QUALITY CONTROL

A. See Section 014000 - Quality Requirements, for additional requirements.

B. Inspect each product for damage and defects.

C. Operate each luminaire after installation and connection to verify proper operation.

D. Test self-powered exit signs and emergency lighting units to verify proper operation upon loss of normal power supply.

E. Correct wiring deficiencies and repair or replace damaged or defective products. Repair or replace excessively noisy ballasts as determined by Architect.

3.05 ADJUSTING

A. Aim and position adjustable luminaires to achieve desired illumination as indicated or as directed by Architect. Secure locking fittings in place.

B. Aim and position adjustable emergency lighting unit lamps to achieve optimum illumination of egress path as required or as directed by Architect or authority having jurisdiction.

C. Air-Handling Luminaires with Air Control Blades or Heat Removal Dampers: Adjust as indicated or as required for proper airflow as directed by Architect.

D. Exit Signs with Field-Selectable Directional Arrows: Set as indicated or as required to properly designate egress path as directed by Architect or authority having jurisdiction.

3.06 CLEANING

A. Clean surfaces according to manufacturer's instructions to remove dirt, fingerprints, paint, or other foreign material and restore finishes to match original factory finish.

3.07 CLOSEOUT ACTIVITIES

A. Demonstration: Demonstrate proper operation of luminaires to Architect, and correct deficiencies or make adjustments as directed.

B. Just prior to Substantial Completion, replace all lamps that have failed.

3.08 PROTECTION

A. Protect installed luminaires from subsequent construction operations.

END OF SECTION 265100

SECTION 311000
SITE CLEARING

PART 1 GENERAL

1.01 SECTION INCLUDES

A. Clearing and protection of vegetation.

B. Removal of existing debris.

1.02 RELATED REQUIREMENTS

A. Section 011010 - Project Summary - Bid Packages : Limitations on Contractor's use of site and premises.

B. Section 011010 - Project Summary - Bid Packages : Sequencing and staging requirements.

C. Section 015000 - Temporary Facilities and Controls: Site fences, security, protective barriers, and waste removal.

D. Section 017000 - Execution and Closeout Requirements: Project conditions; protection of bench marks, survey control points, and existing construction to remain; reinstallation of removed products.

E. Section 017419 - Construction Waste Management and Disposal: Limitations on disposal of removed materials; requirements for recycling.

F. Section 312200 - Grading: Topsoil removal.

G. Section 312200 - Grading: Fill material for filling holes, pits, and excavations generated as a result of removal operations.

H. Section 312323 - Fill: Filling holes, pits, and excavations generated as a result of removal operations.

PART 2 PRODUCTS -- NOT USED

PART 3 EXECUTION

3.01 PREPARATION

A. Call Missouri One Call System at 1-800-DIG-RITE (1-800-344-7483) not less than two working days before performing Work.

1. Request underground utilities to be located and marked within and surrounding construction areas.

3.02 SITE CLEARING

A. Comply with other requirements specified in Section 017000.

B. Minimize production of dust due to clearing operations; do not use water if that will result in ice, flooding, sedimentation of public waterways or storm sewers, or other pollution.

3.03 EXISTING UTILITIES AND BUILT ELEMENTS

A. Coordinate work with utility companies; notify before starting work and comply with their requirements; obtain required permits.

B. Protect existing utilities to remain from damage.

C. Do not disrupt public utilities without permit from authority having jurisdiction.

D. Protect existing structures and other elements that are not to be removed.

3.04 VEGETATION

A. Scope: Remove trees, shrubs, brush, and stumps in areas to be covered by building structure, paving, playing fields, lawns, and planting beds.

B. Do not remove or damage vegetation beyond the limits indicated on drawings.

C. Install substantial, highly visible fences at least 3 feet high to prevent inadvertent damage to vegetation to remain:
   1. At vegetation removal limits.
   2. Around trees to remain within vegetation removal limits; locate no closer to tree than at the drip line.
   3. Around other vegetation to remain within vegetation removal limits.
   4. See Section 015000 for fence construction requirements.

D. In areas where vegetation must be removed but no construction will occur other than pervious paving, remove vegetation with minimum disturbance of the subsoil.

E. Vegetation Removed: Do not burn, bury, landfill, or leave on site.
   1. Existing Stumps: Treat as specified for other vegetation removed; remove stumps and roots to depth of 18 inches.

F. Restoration: If vegetation outside removal limits or within specified protective fences is damaged or destroyed due to subsequent construction operations, replace at no cost to Owner.

3.05 DEBRIS

A. Remove debris, junk, and trash from site.

B. Leave site in clean condition, ready for subsequent work.

C. Clean up spillage and wind-blown debris from public and private lands.

END OF SECTION 311000

SECTION 312200
GRADING

PART 1 GENERAL

1.01 SECTION INCLUDES

A. Removal of topsoil.

B. Rough grading the site for pavements.

C. Replacement of topsoil and finish grading.

1.02 RELATED REQUIREMENTS

A. Section 311000 - Site Clearing.

B. Section 312316 - Excavation.

C. Section 312316.13 - Trenching: Trenching and backfilling for utilities.

D. Section 312323 - Fill: Filling and compaction.

E. Section 329223 - Sodding: Finish ground cover.

1.03 SUBMITTALS

A. Project Record Documents: Accurately record actual locations of utilities remaining by horizontal dimensions, elevations or inverts, and slope gradients.

PART 2 PRODUCTS

2.01 MATERIALS

A. Topsoil- Soil Type S2: Topsoil excavated on-site.
   1. Graded.
   2. Acidity range (pH) of 5.5 to 7.5.
   3. Containing a minimum of 4 percent and a maximum of 30 percent inorganic matter.
   4. Conforming to ASTM D2487 Group Symbol OL, OH, and PT.
   5. Limit decaying matter to 10 percent of total content by volume.
   6. Free of roots, rocks larger than 1/2 inch, subsoil, debris, large weeds and foreign matter.

PART 3 EXECUTION

3.01 EXAMINATION

A. Verify that survey bench mark and intended elevations for the Work are as indicated.

B. Verify the absence of standing or ponding water.

3.02 PREPARATION

A. Identify required lines, levels, contours, and datum.

B. Call Missouri One Call System at 1-800-DIG-RITE (1-800-344-7483) not less than two working days before performing Work.
   1. Request underground utilities to be located and marked within and surrounding construction areas.

C. Stake and flag locations of known private utilities.

D. Locate, identify, and protect from damage above- and below-grade utilities to remain.

E. Provide temporary means and methods to remove all standing or ponding water from areas prior to grading.

F. Protect site features to remain, including but not limited to bench marks, survey control points, existing structures, fences, sidewalks, paving, and curbs, from damage by grading equipment and vehicular traffic.

G. Protect trees to remain by providing substantial fencing around entire tree at locations shown on drawings; no grading is to be performed inside this line.

3.03 ROUGH GRADING

A. Remove topsoil from areas to be further excavated, re-landscaped, or re-graded.

B. Remove subsoil from areas to be further excavated, re-landscaped, or re-graded.

C. Do not remove wet subsoil , unless it is subsequently processed to obtain optimum moisture content.

D. When excavating through roots, perform work by hand and cut roots with sharp axe.

E. Stability: Replace damaged or displaced subsoil to same requirements as for specified fill.

F. Remove and replace soils deemed unsuitable by classification and which are excessively moist due to lack surface water control.

G. Level and contour surfaces to elevations and gradients indicated.

3.04 SOIL REMOVAL AND STOCKPILING

A. Remove excavated topsoil from site.

B. Stockpile subsoil to be re-used on site; remove remainder from site.

C. Stockpiles: Use areas designated on site; pile depth not to exceed 8 feet; protect from erosion.

3.05 FINISH GRADING

A. Before Finish Grading:
   1. Verify building and trench backfilling have been inspected.
   2. Verify subgrade has been contoured and compacted.

B. Remove debris, roots, branches, stones, in excess of 1 inch in size. Remove soil contaminated with petroleum products.

C. Where topsoil is to be placed, scarify surface to depth of 3 inches.

D. In areas where vehicles or equipment have compacted soil, scarify surface to depth of 6 inches.

E. Place topsoil in areas where sodding and planting are indicated.

F. Place topsoil where required to level finish grade.

G. Place topsoil to the following compacted thicknesses:
   1. Areas to be Sodded: 6 inches.

H. Place topsoil during dry weather.

I. Remove roots, weeds, rocks, and foreign material while spreading.

J. Near plants and buildings spread topsoil manually to prevent damage.

K. Fine grade topsoil to eliminate uneven areas and low spots. Maintain profiles and contour of subgrade.

L. Roll placed topsoil.

M. Maintain stability of topsoil during inclement weather. Replace topsoil in areas where surface water has eroded thickness below specifications.

3.06 TOLERANCES

A. Top Surface of Subgrade: Plus or minus 0.10 foot (1-3/16 inches) from required elevation.

B. Top Surface of Finish Grade: Plus or minus 0.04 foot (1/2 inch).

C. Top Surface of Finish Grade at Curbs and Sidewalks: Top of curb or sidewalk elevation or greater.

D. Top Surface of Finish Grade at Pavement Edges: Top of pavement elevation.

3.07 REPAIR AND RESTORATION

A. Existing Facilities, Utilities, and Site Features to Remain: If damaged due to this work, repair or replace to original condition at no cost to Owner.

B. Trees to Remain: If damaged due to this work, trim broken branches and repair bark wounds; if root damage has occurred, obtain instructions from Architect as to remedy.

C. Other Existing Vegetation to Remain: If damaged due to this work, replace with vegetation of equivalent species and size.

3.08 FIELD QUALITY CONTROL

A. See Section 312323 - Fill for compaction density testing.

3.09 CLEANING

A. Remove unused stockpiled subsoil. Grade stockpile area to prevent standing water.

B. Leave site clean and raked, ready to receive landscaping.

END OF SECTION 312200

SECTION 312316
EXCAVATION

PART 1 GENERAL

1.01 SECTION INCLUDES

A. Excavating for paving and site structures.

B. Trenching for utilities outside the building to utility main connections.

C. Temporary excavation support and protection systems.

1.02 PRICE AND PAYMENT PROCEDURES

A. See Section 012200 - Unit Prices, for general requirements applicable to unit prices for excavation.

B. Unit Price A : Excavating Unsuitable Soil Materials:
   1. Measurement method: By the cubic yard.
   2. Includes: Excavating below required elevations to remove unsuitable soil materials, loading and removing from site.
   3. Does Not Include Over-Excavation: Payment will not be made for over-excavated work nor for replacement materials.

C. See Section 312323 - Fill, for measurement and payment provisions related to fill.

PART 3 EXECUTION

2.01 EXAMINATION

A. Verify that survey bench mark and intended elevations for the work are as indicated.

2.02 PREPARATION

A. Identify required lines, levels, contours, and datum locations.

B. Call Missouri One Call System at 1-800-DIG-RITE (1-800-344-7483) not less than two working days before performing Work.
   1. Request underground utilities to be located and marked within and surrounding construction areas.

C. Locate, identify, and protect utilities that remain and protect from damage.

D. Grade top perimeter of excavation to prevent surface water from draining into excavation. Provide temporary means and methods, as required, to maintain surface water diversion until no longer needed, or as directed by Architect.

2.03 EXCAVATING

A. Underpin adjacent structures that could be damaged by excavating work.

B. Excavate to accommodate new structures and construction operations.

C. Notify Architect of unexpected subsurface conditions and discontinue affected Work in area until notified to resume work.

D. Slope banks of excavations deeper than 4 feet to angle of repose or less until shored.

E. Do not interfere with 45 degree bearing splay of foundations.

F. Cut utility trenches wide enough to allow inspection of installed utilities.

G. Hand trim excavations. Remove loose matter.

H. Correct areas that are over-excavated and load-bearing surfaces that are disturbed; see Section 312323.

I. Provide temporary means and methods, as required, to remove all water from excavations until directed by Architect. Remove and replace soils deemed suitable by classification and which are excessively moist due to lack of dewatering or surface water control.

J. Determine the prevailing groundwater level prior to excavation. If the proposed excavation extends less than 1 foot into the prevailing groundwater, control groundwater intrusion with perimeter drains routed to sump pumps, or as directed by the Architect. If the proposed excavation extends more than 1 foot into the excavation, control groundwater intrusion with a comprehensive dewatering procedures, or as directed by the Geotechnical Engineer.

K. Remove excavated material that is unsuitable for re-use from site.

L. Stockpile excavated material to be re-used in area designated on site in accordance with Section 312200.

M. Remove excess excavated material from site.

2.04 FIELD QUALITY CONTROL

A. See Section 014000 - Quality Requirements, for general requirements for field inspection and testing.

B. Provide for visual inspection of load-bearing excavated surfaces by Architect before placement of foundations.

2.05 PROTECTION

A. Divert surface flow from rains or water discharges from the excavation.

B. Prevent displacement of banks and keep loose soil from falling into excavation; maintain soil stability.

C. Protect open excavations from rainfall, runoff, freezing groundwater, or excessive drying so as to maintain foundation subgrade in satisfactory, undisturbed condition.

D. Protect bottom of excavations and soil adjacent to and beneath foundation from freezing.

E. Keep excavations free of standing water and completely free of water during concrete placement.

END OF SECTION 312316

SECTION 312316.13
TRENCHING

PART 1 GENERAL

1.01 SECTION INCLUDES

A. Backfilling and compacting for utilities outside the building to utility main connections.

1.02 RELATED REQUIREMENTS

A. Section 312200 - Grading: Site grading.

1.03 PRICE AND PAYMENT PROCEDURES

A. See Section 012200 - Unit Prices, for general requirements applicable to unit prices for earthwork.

B. Unit Price B : Excavating Unsuitable Soil Materials:
   1. Measurement method: By the cubic yard.
   2. Includes: Excavating below required elevations, loading and removing from site.
   3. Does Not Include Over-Excavation: Payment will not be made for over-excavated work nor for replacement materials.

C. Granular Fill Replacing Unsuitable Soil: Applies to Unit Price B .
   1. Measurement Method: By the cubic yard in place.
   2. Includes: Supplying fill, stockpiling, scarifying substrate surface, placing where required, and compacting.

D. Geotextile Stabilization Fabric: Applies to Unit Price C .
   1. Measurement Method: By the Square Yard in place.
   2. Includes: Cutting and placing where required.

1.04 DEFINITIONS

A. Finish Grade Elevations: Indicated on drawings.

B. Subgrade Elevations: Indicated on drawings and to meet requirements for topsoil placement specified in Section 312200 - Grading.

1.05 REFERENCE STANDARDS

A. ASTM C136/C136M - Standard Test Method for Sieve Analysis of Fine and Coarse Aggregates.

B. ASTM D698 - Standard Test Methods for Laboratory Compaction Characteristics of Soil Using Standard Effort (12,400 ft-lbf/ft3 (600 kN-m/m3)).

C. ASTM D1556/D1556M - Standard Test Method for Density and Unit Weight of Soil in Place by Sand-Cone Method.

D. ASTM D2167 - Standard Test Method for Density and Unit Weight of Soil in Place by the Rubber Balloon Method.

E. ASTM D2487 - Standard Practice for Classification of Soils for Engineering Purposes (Unified Soil Classification System).

F. ASTM D4318 - Standard Test Methods for Liquid Limit, Plastic Limit, and Plasticity Index of Soils.

G. ASTM D6938 - Standard Test Methods for In-Place Density and Water Content of Soil and Soil-Aggregate by Nuclear Methods (Shallow Depth).

1.06 SUBMITTALS

A. See Section 013000 - Administrative Requirements, for submittal procedures.

B. Samples: 10 lb sample of each type of imported fill; submit in air-tight containers to testing laboratory.

C. Materials Sources: Submit name of imported materials source.

D. Fill Composition Test Reports: Results of laboratory tests on proposed and actual materials used.

E. Compaction Density Test Reports by Owner's Testing Agency.

1.07 DELIVERY, STORAGE, AND HANDLING

A. When necessary, store materials on site in advance of need.

B. When fill materials need to be stored on site, locate stockpiles where designated.
   1. Separate differing materials with dividers or stockpile separately to prevent intermixing.
   2. Prevent contamination.
   3. Protect stockpiles from erosion and deterioration of materials.

PART 2 PRODUCTS

2.01 FILL MATERIALS

A. General Fill- Fill Type S1: Subsoil excavated on site or imported borrow material.
   1. Graded.
   2. Free of lumps larger than 3 inches, rocks larger than 2 inches, and debris.
   3. Complying with ASTM D2487 Group Symbol CL.

B. Concrete for Fill: Lean concrete. Minimum compressive strength of 2500 psi.

C. Granular Fill Under Pavements and Structures - Fill Type A1: Coarse aggregate, conforming to County of St. Louis Department of Highways and Traffic standard specification section 1007 - Aggregate Base Material, Type 5.
   1. Graded in accordance with ASTM C 136, within the following limits:
      a. 1 inch sieve: 100 percent passing.
      b. 1/2 inch sieve: 90 to 60 percent passing.
      c. No. 4 sieve: 60 to 35 percent passing.
      d. No. 30 sieve: 35 to 10 percent passing.
      e. No. 200 sieve: 15 to 0 percent passing.
      f. The fraction passing the No. 40 sieve shall have a maximum plasticity index of 6.

D. Granular Fill Replacing Unsuitable Soil - Fill Type A2: Coarse aggregate, conforming to ASTM D448 standard specification size number 357.
   1. Graded in accordance with ASTM C 136, within the following limits:
      a. 2-1/2 inch sieve: 100 percent passing.
      b. 2 inch sieve: 100 to 95 percent passing.
      c. 1 inch sieve: 70 to 35 percent passing.
      d. 1/2 inch sieve: 30 to 10 percent passing.
      e. No. 4 sieve: 5 to 0 percent passing.

E. Granular Fill for Drainage - Fill Type A3: Coarse aggregate, conforming to County of St. Louis Department of Highways and Traffic standard specification section 1009 - Aggregate For Drainage, Grade 3.
   1. Graded in accordance with ASTM C 136, within the following limits:
      a. 1 inch sieve: 100 percent passing.
      b. 3/4 inch sieve: 100 to 85 percent passing.
      c. 3/8 inch sieve: 55 to 15 percent passing.
      d. No. 4 sieve: 10 to 0 percent passing.

F. Bedding for Utility Pipes and Conduits, 3 Inch Diameter And Over - Fill Type A4: Coarse aggregate, conforming to ASTM D 448 standard specification size number 68.
   1. Graded in accordance with ASTM C 136, within the following limits:
      a. 1 inch sieve: 100 percent passing.
      b. 3/4 inch sieve: 100 to 90 percent passing.
      c. 3/8 inch sieve: 65 to 30 percent passing.

d. No. 4 sieve: 25 to 5 percent passing.
e. No. 8 sieve: 10 to 0 percent passing.

G. Bedding for Sanitary and Storm Sewer Pipes - Fill Type A5: Coarse aggregate, conforming to Metropolitan St. Louis Sewer District standard specification section 2.K.2 - MSD-1 Bedding.
1. Graded in accordance with ASTM C 136, within the following limits:
a. 1 inch sieve: 100 percent passing.
b. 3/4 inch sieve: 100 to 90 percent passing.
c. 1/2 inch sieve: 60 to 35 percent passing.
d. No. 100 sieve: 10 to 0 percent passing.

H. Sand - Fill Type A7: Natural river or bank sand; washed; free of silt, clay, loam, friable or soluble materials, and organic matter.
1. Grade in accordance with ASTM D2487 Group Symbol SW.

I. Topsoil: See Section 312200.

2.02 ACCESSORIES

A. Geotextile Stabilization Fabric: Non-biodegradable, woven; Mirafi-HP570 manufactured by TenCate. www.tencate.com

B. Substitutions: See Section 016000 - Product Requirements.

2.03 SOURCE QUALITY CONTROL

A. See Section 014000 - Quality Requirements, for general requirements for testing and analysis of soil material.

B. Where fill materials are specified by reference to a specific standard, testing of samples for compliance will be provided before delivery to site.

C. If tests indicate materials do not meet specified requirements, change material and retest.

D. Provide materials of each type from same source throughout the Work.

PART 3 EXECUTION

3.01 EXAMINATION

A. Verify that survey bench marks and intended elevations for the work are as indicated.

3.02 PREPARATION

A. Identify required lines, levels, contours, and datum locations.

B. Call Missouri One Call System at 1-800-DIG-RITE (1-800-344-7483) not less than two working days before performing Work.
1. Request underground utilities to be located and marked within and surrounding construction areas.

C. Locate, identify, and protect utilities that remain and protect from damage.

D. Notify utility company to remove and relocate utilities.

E. Protect bench marks, survey control points, existing structures, fences, sidewalks, paving, and curbs from excavating equipment and vehicular traffic.

F. Protect plants, lawns, rock outcroppings, and other features to remain.

G. Grade top perimeter of trenching area to prevent surface water from draining into trench. Provide temporary means and methods, as required, to maintain surface water diversion until no longer needed, or as directed by the Architect.

3.03 LINES AND GRADES

A. Lay pipes to lines and grades indicated on Drawings.
1. Architect reserves right to make changes in lines, grades, and depths of utilities when changes are required for Project conditions.

B. Use laser-beam instrument with qualified operator to establish lines and grades.

3.04 TRENCHING

A. Notify Architect of unexpected subsurface conditions and discontinue affected Work in area until notified to resume work.

B. Slope banks of excavations deeper than 4 feet to angle of repose or less until sheeted or shored.

C. Do not interfere with 45 degree bearing splay of foundations.

D. Cut trenches 2 feet wider than outside diameter of pipe or conduit unless indicated otherwise on Drawings.

E. Hand trim excavations. Hand trim for bell and spigot pipe joints. Remove loose matter.

F. Provide uniform and continuous bearing and support for bedding material, pipes, and conduits.

G. Remove large stones and other hard matter that could damage piping or impede consistent backfilling or compaction.

H. Remove water or materials from the trench that interfere with Work.

I. Remove lumped subsoil, boulders, and rock up to 1/3 cubic yard measured by volume. See Section 312316.26 for removal of larger material.

J. Remove excavated material that is unsuitable for re-use from site.

K. Stockpile excavated material to be re-used in area designated on site in accordance with Section 312200.

L. Remove excess excavated material from site.

M. Provide temporary means and methods, as required, to remove all water from trenching until directed by the Architect. Remove and replace soils deemed unsuitable by classification and which are excessively moist due to lack of dewatering or surface water control.

N. Determine the prevailing groundwater level prior to trenching. If the proposed trench extends less than 1 foot into the prevailing groundwater, control groundwater intrusion with perimeter drains routed to sump pumps, or as directed by the Architect.

O. Do not advance open trench more than 200 feet ahead of installed pipe.

3.05 SHEETING AND SHORING

A. Sheet, shore, and brace excavations to prevent danger to persons, structures and adjacent properties and to prevent caving, erosion, and loss of surrounding subsoil.

B. Support trenches more than 4 feet deep excavated through unstable, loose, or soft material.
   1. Provide sheeting, shoring, bracing, or other protection to maintain stability of excavation.
   2. Design sheeting, shoring, bracing, or other protection to be removed at completion of excavation work.

C. Repair damage caused by failure of the sheeting, shoring, or bracing and for settlement of filled excavations or adjacent soil at no cost to Owner.

D. Repair damage to new and existing Work from settlement, water or earth pressure or other causes resulting from inadequate sheeting, shoring, or bracing at no cost to Owner.

3.06 PREPARATION FOR UTILITY PLACEMENT

A. Cut out soft areas of subgrade not capable of compaction in place to elevations directed by Architect. Line over excavated trench bottom and sides with Geotextile Stabilization Fabric. Backfill to original subgrade elevation with Fill Type A2.

B. Compact subgrade to density equal to or greater than requirements for subsequent fill material.

C. Until ready to backfill, maintain excavations and prevent loose soil from falling into excavation.

3.07 BACKFILLING

A. Backfill to contours and elevations indicated using unfrozen materials.

B. Fill up to subgrade elevations unless otherwise indicated.

C. Employ a placement method that does not disturb or damage other work.

D. Systematically fill to allow maximum time for natural settlement. Do not fill over porous, wet, frozen or spongy subgrade surfaces.

E. Maintain optimum moisture content of fill materials to attain required compaction density.

F. Granular Fill: Place and compact materials in equal continuous layers not exceeding 6 inches compacted depth.

G. Soil Fill: Place and compact material in equal continuous layers not exceeding 8 inches compacted depth.

H. Slope grade away from building minimum 2 inches in 10 feet, unless noted otherwise. Make gradual grade changes. Blend slope into level areas.

I. Correct areas that are over-excavated.
   1. Thrust bearing surfaces: Fill with concrete.
   2. All areas except thrust bearing surfaces: Use Fill Type A1, flush to required elevation, compacted to minimum 95 percent of maximum dry density.

J. Compaction Density Unless Otherwise Specified or Indicated:
   1. Under paving, slabs-on-grade, and similar construction: 95 percent of maximum dry density.
   2. At other locations: 90 percent of maximum dry density.

K. Do not leave more than 50 feet of trench open at end of working day.

L. Protect open trench to prevent danger to Owner and the public.

M. Reshape and re-compact fills subjected to vehicular traffic.

3.08 BEDDING AND FILL AT SPECIFIC LOCATIONS

A. Utility Piping and Conduits Under 3 Inch Diameter:
   1. Bedding: Use Fill Type A7.
   2. Cover with Fill Type S1 under landscape areas.
   3. Cover with Fill Type A1 under pavements and structures.

B. Utility Piping and Conduits 3 Inch Diameter And Over:
   1. Bedding: Use Fill Type A4.
   2. Cover with Fill Type S1 under landscape areas.
   3. Cover with Fill Type A1 under pavements and structures.

C. Sanitary and Storm Sewer Piping:
   1. Bedding: Use Fill Type A5 or A6 as appropriate for pipe size and material.
   2. Cover with Fill Type S1 under landscape areas.
   3. Cover with Fill Type A1 under pavements and structures.

D. Pipe Culverts:
   1. Bedding: Use Fill Type A5 or A6 as appropriate for pipe size and material.
   2. Cover with Fill Type A1.

E. Subdrainage Piping at Behind Retaining Walls:
   1. Filter aggregate and geotextile fabric: Section 33 4600.
   2. Cover filter aggregate with Fill Type A3.
   3. Place geotextile fabric in trench to separate drainage fill from soil.

F. At French Drains:
   1. Use Fill Type A3.
   2. Place geotextile fabric in trench to separate drainage fill from soil.

3.09 TOLERANCES

A. Top Surface of General Backfilling: Plus or minus 1 inch from required elevations.

B. Top Surface of Backfilling Under Paved Areas: Plus or minus 1/2 inch from required elevations.

3.10 FIELD QUALITY CONTROL

A. See Section 014000 - Quality Requirements, for general requirements for field inspection and testing.

B. Perform compaction density testing on compacted fill in accordance with ASTM D1556, ASTM D2167, or ASTM D6938.

C. Evaluate results in relation to compaction curve determined by testing uncompacted material in accordance with ASTM D698 ("standard Proctor").

D. If tests indicate work does not meet specified requirements, remove work, replace and retest.

E. Frequency of Tests: 1 test for each lift for each 100 feet of trench length.

3.11 CLEANING

A. Leave unused materials in a neat, compact stockpile.

B. Remove unused stockpiled materials, leave area in a clean and neat condition. Grade stockpile area to prevent standing surface water.

C. Leave borrow areas in a clean and neat condition. Grade to prevent standing surface water.

END OF SECTION 312316.13

SECTION 312323
FILL

PART 1 GENERAL

1.01 SECTION INCLUDES

A. Filling holes, pits, and excavations generated as a result of removal (demolition) operations.

1.02 RELATED REQUIREMENTS

A. Section 312200 - Grading: Removal and handling of soil to be re-used.

B. Section 312200 - Grading: Site grading.

C. Section 312316 - Excavation: Removal and handling of soil to be re-used.

D. Section 312316.13 - Trenching: Excavating for utility trenches outside the building to utility main connections.

E. Section 334100 - Subdrainage: Filter aggregate and filter fabric for foundation drainage systems.

1.03 PRICE AND PAYMENT PROCEDURES

A. See Section 012200 - Unit Prices, for general requirements applicable to unit prices for earthwork.

B. Granular Fill Replacing Unsuitable Soil: Applies to Unit Price A .
   1. Measurement Method: By the cubic yard.
   2. Includes: Excavating existing material, stockpiling, scarifying substrate surface, placing where required, compacting, and dewatering.

C. Geotextile Stabilization Fabric: Applies to Unit Price C .
   1. Measurement Method: By the Square Yard in place.
   2. Includes: Cutting and placing where required.

1.04 DEFINITIONS

A. Finish Grade Elevations: Indicated on drawings.

B. Subgrade Elevations: Indicated on drawings.

1.05 REFERENCE STANDARDS

A. ASTM C136/C136M - Standard Test Method for Sieve Analysis of Fine and Coarse Aggregates.

B. ASTM D1556/D1556M - Standard Test Method for Density and Unit Weight of Soil in Place by Sand-Cone Method.

C. ASTM D2487 - Standard Practice for Classification of Soils for Engineering Purposes (Unified Soil Classification System).

D. ASTM D4318 - Standard Test Methods for Liquid Limit, Plastic Limit, and Plasticity Index of Soils.

E. ASTM D6938 - Standard Test Methods for In-Place Density and Water Content of Soil and Soil-Aggregate by Nuclear Methods (Shallow Depth).

1.06 SUBMITTALS

A. See Section 013000 - Administrative Requirements, for submittal procedures.

B. Samples: 10 pounds sample of each type of imported fill; submit in air-tight containers to testing laboratory.

C. Materials Sources: Submit name of imported materials source.

D. Fill Composition Test Reports: Results of laboratory tests on proposed and actual materials used, including manufactured fill.

1.07 DELIVERY, STORAGE, AND HANDLING

A. When necessary, store materials on site in advance of need.

B. When fill materials need to be stored on site, locate stockpiles where designated.
   1. Separate differing materials with dividers or stockpile separately to prevent intermixing.
   2. Prevent contamination.
   3. Protect stockpiles from erosion and deterioration of materials.

PART 2 PRODUCTS

2.01 FILL MATERIALS

A. General Fill- Fill Type S1: Subsoil excavated on site or imported borrow material.
   1. Graded.
   2. Free of lumps larger than 3 inches, rocks larger than 2 inches, and debris.
   3. Complying with ASTM D2487 Group Symbol CL.

B. Concrete for Fill: Lean concrete Minimum compressive strength of 2500 psi.

C. Granular Fill - Fill Type A1: Coarse aggregate, conforming to County of St. Louis Department of Highways and Traffic standard specification section 1007 - Aggregate Base Material, Type 5.
   1. Graded in accordance with ASTM C 136, within the following limits:
      a. 1 inch sieve: 100 percent passing.
      b. 1/2 inch sieve: 90 to 60 percent passing.
      c. No. 4 sieve: 60 to 35 percent passing.
      d. No. 30 sieve: 35 to 10 percent passing.
      e. No. 200 sieve: 15 to 0 percent passing.
      f. The fraction passing the No. 40 sieve shall have a maximum plasticity index of 6.

D. Granular Fill Replacing Unsuitable Soil - Fill Type A2: Coarse aggregate, conforming to ASTM D448 standard specification size number 357.
   1. Graded in accordance with ASTM C 136, within the following limits:
      a. 2-1/2 inch sieve: 100 percent passing.
      b. 2 inch sieve: 100 to 95 percent passing.
      c. 1 inch sieve: 70 to 35 percent passing.
      d. 1/2 inch sieve: 30 to 10 percent passing.
      e. No. 4 sieve: 5 to 0 percent passing.

E. Granular Fill for Drainage - Fill Type A3: Coarse aggregate, conforming to County of St. Louis Department of Highways and Traffic standard specification section 1009 - Aggregate For Drainage, Grade 3.
   1. Graded in accordance with ASTM C 136, within the following limits:
      a. 1 inch sieve: 100 percent passing.
      b. 3/4 inch sieve: 100 to 85 percent passing.
      c. 3/8 inch sieve: 55 to 15 percent passing.
      d. No. 4 sieve: 10 to 0 percent passing.

F. Bedding for Utility Pipes and Conduits, 3 Inch Diameter And Over - Fill Type A4: Coarse aggregate, conforming to ASTM D 448 standard specification size number 68.
   1. Graded in accordance with ASTM C 136, within the following limits:
      a. 1 inch sieve: 100 percent passing.
      b. 3/4 inch sieve: 100 to 90 percent passing.
      c. 3/8 inch sieve: 65 to 30 percent passing.
      d. No. 4 sieve: 25 to 5 percent passing.
      e. No. 8 sieve: 10 to 0 percent passing.

G. Topsoil: See Section 312200.

2.02 ACCESSORIES

A. Geotextile Stabilization Fabric: Non-biodegradable, woven; Mirafi-HP570 manufactured by TenCate. www.tencate.com

B. Substitutions: See Section 016000 - Product Requirements.

2.03 SOURCE QUALITY CONTROL

A. See Section 014000 - Quality Requirements, for general requirements for testing and analysis of soil material.

B. Where fill materials are specified by reference to a specific standard, testing of samples for compliance will be provided before delivery to site.

C. If tests indicate materials do not meet specified requirements, change material and retest.

D. Provide materials of each type from same source throughout the Work.

PART 3 EXECUTION

3.01 EXAMINATION

A. Verify that survey bench marks and intended elevations for the Work are as indicated.

B. Identify required lines, levels, contours, and datum locations.

C. See Section 312200 - Grading for additional requirements.

D. Verify areas to be filled are not compromised with surface or ground water.

3.02 PREPARATION

A. Scarify subgrade surface to a depth of 6 inches to identify soft spots.

B. Cut out soft areas of subgrade not capable of compaction in place. Backfill with Concrete Fill Type S1 Fill Type A1 or Fill Type A2 as directed by Architect.

C. Compact subgrade to density equal to or greater than requirements for subsequent fill material.

D. Until ready to fill, maintain excavations and prevent loose soil from falling into excavation.

3.03 FILLING

A. Fill to contours and elevations indicated using unfrozen materials.

B. Fill up to subgrade elevations unless otherwise indicated.

C. Employ a placement method that does not disturb or damage other work.

D. Systematically fill to allow maximum time for natural settlement. Do not fill over porous, wet, frozen or spongy subgrade surfaces.

E. Maintain optimum moisture content of fill materials to attain required compaction density.

F. Granular Fill: Place and compact materials in equal continuous layers not exceeding 6 inches compacted depth.

G. Soil Fill: Place and compact material in equal continuous layers not exceeding 8 inches compacted depth.

H. Slope grade away from building minimum 2 inches in 10 feet, unless noted otherwise. Make gradual grade changes. Blend slope into level areas.

I. Correct areas that are over-excavated.
   1. Load-bearing foundation surfaces: Fill with concrete.
   2. Other areas: Use general fill, flush to required elevation, compacted to minimum 95 percent of maximum dry density.

J. Compaction Density Unless Otherwise Specified or Indicated:
   1. Under paving, footings, slabs-on-grade, footings, footings, similar construction, and footings: 95 percent of maximum dry density.
   2. At other locations: 90 percent of maximum dry density.

K. Reshape and re-compact fills subjected to vehicular traffic.

L. Maintain temporary means and methods, as required, to remove all water while fill is being placed as required, or until directed by the Architect. Remove and replace soils deemed unsuitable by classification and which are excessively moist due to lack of dewatering or surface water control.

3.04 FILL AT SPECIFIC LOCATIONS

A. Use general fill unless otherwise specified or indicated.

B. At Foundation Walls and Footings:
   1. Use Fill Type S1.
   2. Compact each lift to 95 percent of maximum dry density on both sides of foundation walls and footings.
   3. Do not backfill against unsupported foundation walls.
   4. Backfill simultaneously on each side of unsupported foundation walls until supports are in place.

C. Over Subdrainage Piping at Foundation Perimeter and Under Slabs:
   1. Drainage fill and geotextile fabric: Section 334100 - Subdrainage.
   2. Cover drainage fill with Fill Type A3.

D. Over Buried Utility Piping, Conduits, and Duct Bank in Trenches:
   1. Bedding for under 3 Inch diameter: Use Fill Type A7.
   2. Bedding for 3 Inch diameter and over: Use Fill Type A4.
   3. Cover with Fill Type S1.

E. At Lawn Areas:
   1. Use Fill Type S1.
   2. See Section 312200 - Grading for topsoil placement.

F. At Planting Areas Other Than Lawns and Planter Boxes:
   1. Use Fill Type S1.
   2. See Section 312200 - Grading for topsoil placement.

G. At French Drains:
   1. Use Fill Type A3.

H. Under Monolithic Paving and Monolithic Paver Setting Beds:
   1. Compact subsoil to 95 percent of its maximum dry density before placing fill.
   2. Use Fill Type S1.
   3. See Section 321123 - Aggregate Base Courses for aggregate base course placed over fill.

3.05 TOLERANCES

A. Top Surface of General Filling: Plus or minus 1 inch from required elevations.

B. Top Surface of Filling Under Paved Areas: Plus or minus 1/2 inch from required elevations.

3.06 CLEANING

A. See Section 017419 - Construction Waste Management and Disposal, for additional requirements.

B. Remove unused stockpiled materials, leave area in a clean and neat condition. Grade stockpile area to prevent standing surface water.

C. Leave borrow areas in a clean and neat condition. Grade to prevent standing surface water.

END OF SECTION 312323

SECTION 312500
EROSION AND SEDIMENTATION CONTROLS

PART 1 GENERAL

1.01 SECTION INCLUDES

A. Permanent erosion and sediment control.

1.02 RELATED REQUIREMENTS

A. Section 033000 - Cast-in-Place Concrete: Concrete for permanent erosion control structures indicated on drawings.

B. Section 312323 - Fill: Filling and compaction.

C. Section 313700 - Riprap: Stabilization using riprap.

D. Section 321123 - Aggregate Base Courses: Aggregate base course.

E. Section 329223 - Sodding: Permanent turf for erosion control.

1.03 REFERENCE STANDARDS

A. ASTM D4318 - Standard Test Methods for Liquid Limit, Plastic Limit, and Plasticity Index of Soils.

B. ASTM D5338 - Standard Test Method for Determining Aerobic Biodegradation of Plastic Materials Under Controlled Composting Conditions, Incorporating Thermophilic Temperatures.

C. ASTM D7322/D7322M - Standard Test Method for Determination of Erosion Control Product (ECP) Ability to Encourage Seed Germination and Plant Growth Under Bench-Scale Conditions.

D. ASTM D7367 - Standard Test Method for Determining Water Holding Capacity of Fiber Mulches for Hydraulic Planting.

E. EPA (NPDES) - National Pollutant Discharge Elimination System (NPDES), Construction General Permit.

F. FHWA FLP-94-005 - Best Management Practices for Erosion and Sediment Control.

G. USDA TR-55 - Urban Hydrology for Small Watersheds; USDA Natural Resources Conservation Service.

1.04 SUBMITTALS

A. See Section 013000 - Administrative Requirements for submittal procedures.

B. Maintenance Instructions: Provide instructions covering inspection and maintenance for preventive measures that must remain after Substantial Completion.

PART 2 PRODUCTS

2.01 PERFORMANCE REQUIREMENTS

A. Comply with requirements of EPA (NPDES) for erosion and sedimentation control, as specified by the NPDES, for Phases I and II, and in compliance with requirements of Construction General Permit (CGP), whether the project is required by law to comply or not.

B. Comply with more stringent requirements of St. Louis County Erosion and Sedimentation Control Manual.

C. Runoff Calculation Standard for Urban Areas: USDA TR-55.

2.02 ACCESSORY MATERIALS

A. Fill Material: See Section 312323.

B. Sod for Permanent Cover: Cultivated grass sod, type as indicated; with strong fibrous root system, free of stones, burned or bare spots.

C. Plants for Permanent Cover: Specie and sizes identified in plant schedule, grown in climatic conditions similar to those in locality of the work.

D. Crushed Stone and Gravel: See Section 321123 for aggregate.

E. Concrete: See Section 033000.

PART 3 EXECUTION

3.01 EXAMINATION

A. Examine site and identify existing features that contribute to erosion resistance; maintain such existing features to greatest extent possible.

3.02 PREPARATION

A. Schedule work so that soil surfaces are left exposed for the minimum amount of time.

B. Do not begin clearing, grading, or other work involving disturbance of ground surface cover until applicable permits have been obtained; furnish documentation required to obtain applicable permits.

1. Obtain and pay for permits and provide security required by authority having jurisdiction.

C. Timing: Put preventive measures in place as soon as possible after disturbance of surface cover and before precipitation occurs.

3.03 FIELD QUALITY CONTROL

A. Provide analysis of topsoil fill; see Section 014000.

3.04 INSTALLATION

A. Hydroseeding: Apply seeded slurry with a hydraulic seeder at a rate of 275 lbs per acre evenly in two intersecting directions.

B. Do not seed areas in excess of that which can be mulched on same day.

C. Immediately following seeding, apply mulch to a thickness of 1/8 inch. Maintain clear of shrubs and trees.

D. Apply water with a fine spray immediately after each area has been mulched. Saturate to 4 inches of soil.

E. Following germination, immediately reseed areas without germinated seeds that are larger than 4 by 4 inches.

3.05 MAINTENANCE

A. Inspect preventive measures weekly, within 24 hours after the end of any storm that produces 0.5 inches or more rainfall at the project site, and daily during prolonged rainfall.

B. Repair deficiencies immediately.

3.06 CLEAN UP

A. Clean out sediment control structures that are to remain as permanent measures.

END OF SECTION 312500

SECTION 321123
AGGREGATE BASE COURSES

PART 1 GENERAL

1.01 SECTION INCLUDES

A. Aggregate base course.

1.02 RELATED REQUIREMENTS

A. Section 312200 - Grading: Preparation of site for base course and topsoil fill at areas adjacent to aggregate base course.

B. Section 312316.13 - Trenching: Compacted fill over utility trenches under base course.

C. Section 312323 - Fill: Compacted fill under base course.

D. Section 321216 - Asphalt Paving: Binder and finish asphalt courses.

E. Section 321313 - Concrete Paving: Finish concrete surface course.

F. Section 321713 - Parking Bumpers: Concrete bumpers.

G. Section 334100 - Subdrainage: Filter aggregate and filter fabric for foundation drainage systems.

1.03 REFERENCE STANDARDS

A. ASTM C136/C136M - Standard Test Method for Sieve Analysis of Fine and Coarse Aggregates.

B. ASTM D698 - Standard Test Methods for Laboratory Compaction Characteristics of Soil Using Standard Effort (12,400 ft-lbf/ft3 (600 kN-m/m3)).

C. ASTM D1556/D1556M - Standard Test Method for Density and Unit Weight of Soil in Place by Sand-Cone Method.

D. ASTM D2167 - Standard Test Method for Density and Unit Weight of Soil in Place by the Rubber Balloon Method.

E. ASTM D4318 - Standard Test Methods for Liquid Limit, Plastic Limit, and Plasticity Index of Soils.

F. ASTM D6938 - Standard Test Methods for In-Place Density and Water Content of Soil and Soil-Aggregate by Nuclear Methods (Shallow Depth).

1.04 SUBMITTALS

A. See Section 013000 - Administrative Requirements for submittal procedures.

B. Materials Sources: Submit name of imported materials source.

C. Aggregate Composition Test Reports: Results of laboratory tests on proposed materials.

D. Compaction Density Test Reports by Owner's Testing Agency.

1.05 DELIVERY, STORAGE, AND HANDLING

A. When necessary, store materials on site in advance of need.

B. When aggregate materials need to be stored on site, locate where directed by Owner.

C. Aggregate Storage, General:
   1. Separate differing materials with dividers or stockpile separately to prevent intermixing.
   2. Prevent contamination.
   3. Protect stockpiles from erosion and deterioration of materials.

PART 2 PRODUCTS

2.01 MATERIALS

A. Aggregate Type A1: Coarse aggregate, conforming to County of St. Louis Department of Highways and Traffic standard specification section 1007 - Aggregate Base Material, Type 5.

1. Graded in accordance with ASTM C 136, within the following limits:
    a. 1 inch sieve: 100 percent passing.
    b. 1/2 inch sieve: 90 to 60 percent passing.
    c. No. 4 sieve: 60 to 35 percent passing.
    d. No. 30 sieve: 35 to 10 percent passing.
    e. No. 200 sieve: 15 to 0 percent passing.
    f. The fraction passing the No. 40 sieve shall have a maximum plasticity index of 6.

B. Aggregate Type A3: Coarse aggregate, conforming to County of St. Louis Department of Highways and Traffic standard specification section 1009 - Aggregate For Drainage, Grade 3.
1. Graded in accordance with ASTM C 136, within the following limits:
    a. 1 inch sieve: 100 percent passing.
    b. 3/4 inch sieve: 100 to 85 percent passing.
    c. 3/8 inch sieve: 55 to 15 percent passing.
    d. No. 4 sieve: 10 to 0 percent passing.

2.02 SOURCE QUALITY CONTROL

A. See Section 014000 - Quality Requirements for general requirements for testing and analysis of aggregate materials.

B. Provide materials of each type from same source throughout the Work.

PART 3 EXECUTION

3.01 EXAMINATION

A. Verify that survey bench marks and intended elevations for the work are as indicated.

B. Verify substrate has been inspected, gradients and elevations are correct, and is dry.

3.02 PREPARATION

A. Correct irregularities in substrate gradient and elevation by scarifying, reshaping, and re-compacting.

B. Do not place aggregate on soft, muddy, or frozen surfaces.

3.03 INSTALLATION

A. Place aggregate in maximum 6 inch layers and roller compact to specified density.

B. Level and contour surfaces to elevations and gradients indicated.

C. Add small quantities of fine aggregate to coarse aggregate as appropriate to assist compaction.

D. Add water to assist compaction. If excess water is apparent, remove aggregate and aerate to reduce moisture content.

E. Use mechanical tamping equipment in areas inaccessible to compaction equipment.

3.04 TOLERANCES

A. Flatness: Maximum variation of 1/2 inch measured with 10 foot straight edge.

B. Scheduled Compacted Thickness: Within 1/4 inch.

C. Variation From Design Elevation: Within 1/2 inch.

3.05 FIELD QUALITY CONTROL

A. See Section 014000 - Quality Requirements for general requirements for field inspection and testing.

B. Compaction density testing will be performed on compacted aggregate base course in accordance with ASTM D1556, ASTM D2167, ASTM D3017, or ASTM D6938.

C. Results will be evaluated in relation to compaction curve determined by testing uncompacted material in accordance with ASTM D698 ("standard Proctor").

D. If tests indicate work does not meet specified requirements, remove work, replace and retest.

E. Frequency of Tests: 1 test for each lift for each 5 000 s.f. of area.

F. Proof roll compacted aggregate at surfaces that will be under slabs-on-grade and paving.

3.06 CLEANING

A. Remove unused stockpiled materials, leave area in a clean and neat condition. Grade stockpile area to prevent standing surface water.

END OF SECTION 321123

SECTION 321216
ASPHALT PAVING

PART 1 GENERAL

1.01 SECTION INCLUDES

A. Single course bituminous concrete paving for overlay.

B. Double course bituminous concrete paving.

1.02 RELATED REQUIREMENTS

1.03 PRICE AND PAYMENT PROCEDURES

A. The Contractor shall be allowed to make a claim for adjustment to the Contract Sum for any plant mix bituminous base, plant mix bituminous pavement, and plant mix bituminous surface leveling placed if the Missouri Department of Transportation (MODOT) Asphalt Price Index increases by more than 10 percent from the monthly Asphalt Price Index of the month the project was bid.
   1. The Owner will issue a Change Order based upon the approved claim made by the Contractor, as defined and calculated below, for the applicable Work completed during each month except for Work on which the Contractor is being charged liquidated damages, due to working beyond the project Substantial Completion Date.
      a. In this case, the "D" value used for the price adjustment will be either the last "D" value prior to the date that liquidated damage assessment began or the current monthly "D" value, whichever is lower.
      b. If the Contractor is being charged liquidated damages due to the Work progressing beyond the project Substantial Completion Date and the current months “D” value results in a credit to the Owner, then the current monthly "D" value will be used.

B. The Owner will issue a credit Change Order for adjustment to the Contract Sum for any plant mix bituminous base, plant mix bituminous pavement, and plant mix bituminous surface leveling placed if the Missouri Department of Transportation (MODOT) Asphalt Price Index decreases by more than 10 percent from the monthly Asphalt Price Index of the month the project was bid.
   1. The Contractor shall cooperate with the Owner and provide any requested information to assist in determining the correct quantities to be used in calculating the credit Change Order.

C. The Asphalt Price Index will be obtained from the MODOT website: http://www.modot.org/business/contractor_resources/bid_opening_info/bidGenInfo.shtml

D. To determine the adjustment for any asphalt cement containing material specified in this section the following formula will be used:
   1. A = (B x C) x (D-E)

E. Where:
   1. A = Contract adjustment amount for asphalt mix placed during monthly Asphalt Price Index period
   2. B = Tons of asphalt mix placed during the monthly Asphalt Price Index period
   3. C = % of virgin asphalt binder as listed in the job mix formula in use
   4. D = Asphalt Price Index, as published by MODOT for the month prior to the month of mix placement (e.g., if asphalt material placed in July, use Price Index listed for June)
   5. E = Asphalt Price Index, as published by MODOT for the month prior to the letting (e.g., if project bid in February, use Price Index listed for January)

F. The contract adjustment will be applied to the actual amount of asphalt binder used by the Contractor for all asphalt items.

G. The percentage of virgin asphalt as shown in the submitted and accepted job mix formula for the Project will be the basis for adjustments for any asphalt mix type placed on the Project during the monthly index period.

H. This adjustment will not extend to any effective asphalt obtained from the use of Recycled Asphalt Pavement (RAP) and Recycled Asphalt Shingles (RAS) or both will not be eligible for adjustment.

1.04 REFERENCE STANDARDS

A. AI MS-2 - Asphalt Mix Design Methods.

B. AI MS-19 - Basic Asphalt Emulsion Manual.

C. ASTM D946 - Standard Specification for Penetration-Graded Asphalt Cement for Use in Pavement Construction.

1.05 SUBMITTALS

A. Product Data: Submit product information and mix design to Owner.

B. Manufacturer's Certificate: Certify Products meet or exceed specified requirements.

1.06 QUALITY ASSURANCE

A. Perform Work in accordance with County of St. Louis Department of Highways and Traffic standards.

B. Mixing Plant: Complying with State of Missouri Highways standard.

C. Obtain materials from same source throughout.

1.07 FIELD CONDITIONS

A. Do not place asphalt when ambient air or base surface temperature is less than 40 degrees F, or surface is wet or frozen.

B. Place bitumen mixture when temperature is not more than 15 F degrees below bitumen supplier's bill of lading and not more than maximum specified temperature.

PART 2 PRODUCTS

2.01 MATERIALS

A. Crack Filler/Sealant: Sealant material shall be in accordance with County of St. Louis Department of Highways and Traffic standard specifications, Section 1057.5, Joint and Crack Sealer, Hot-Poured Elastic Type.

B. Tack Coat: Emulsified asphalt in accordance with County of St. Louis Department of Highways and Traffic standard specifications, Section 407 - Tack Coat.

2.02 ASPHALT PAVING MIXES

A. Use dry material to avoid foaming. Mix uniformly.

B. Type X Binder Course: In accordance with County of St. Louis Department of Highways and Traffic standard specifications, Section 405 - Bituminous Pavements and Base.

C. Type C Overlay Course: In accordance with County of St. Louis Department of Highways and Traffic standard specifications, Section 405 - Bituminous Pavements and Base.

D. Type C Binder Course: In accordance with County of St. Louis Department of Highways and Traffic standard specifications, Section 405 - Bituminous Pavements and Base.

E. Type D Wearing Course: In accordance with County of St. Louis Department of Highways and Traffic standard specifications, Section 405 - Bituminous Pavements and Base.

F. Mix Temperature: Not less than 200 degrees F at time of placement.

PART 3 EXECUTION

3.01 EXAMINATION

A. Contractor shall contact the Owner to arrange an inspection of the crack repair by the Owner and Contractor prior to placing the tack coat and overlay.

3.02 PREPARATION - CRACK REPAIR

A. Cracks 3/8 inch wide or less:
   1. Remove and dispose of all loose debris in crack.
   2. Place pavement repair membrane in accordance with requirements of Section 320117.
   3. Apply tack coat in preparation for single course overlay.

B. Cracks over 3/8 inch wide:
   1. Mill existing asphalt pavement along entire length of crack.
      a. Width 18 inches.
         1) Tolerance: Centered on crack within 6 inches +/-.
      b. Depth 2 inches.
         1) Tolerance: Within 1/4 inch +/-.
   2. Remove and dispose of all loose debris in crack and milled channel.
   3. Fill crack and milled channel with crack filler/sealant material to match finished grade of adjacent existing asphalt pavement.
   4. Place pavement repair membrane over each joint between the existing asphalt pavement and the milled channel filled with crack filler/sealant material in accordance with the requirements of Section 320117.
   5. Apply tack coat in preparation for single course overlay.

3.03 PREPARATION - TACK COAT

A. Apply tack coat in accordance with County of St. Louis Department of Highway and Traffic standard specifications, Section 407 - Tack Coat.

B. Apply tack coat on asphalt surfaces to receive overlay at uniform rate of 0.05 gal/sq yd.

C. Apply tack coat to contact surfaces of existing asphalt cold joints, concrete curbs, and concrete curb and gutters at uniform rate of 0.05 galy/sq yd.

3.04 PLACING ASPHALT PAVEMENT - SINGLE COURSE OVERLAY

A. Install Work in accordance with County of St. Louis Department of Highways and Traffice standards.

B. Place asphalt within 24 hours of applying tack coat.

C. Place to thickness recommended in Geotech report.

D. Compact pavement by rolling to specified density. Do not displace or extrude pavement from position. Hand compact in areas inaccessible to rolling equipment.

E. Perform rolling with consecutive passes to achieve even and smooth finish without roller marks.

3.05 PLACING ASPHALT PAVEMENT - SINGLE COURSE

A. Install Work in accordance with County of St. Louis Department of Highways and Traffice standards.

B. Place asphalt within 24 hours of applying primer or tack coat.

C. Place asphalt to thickness recommended in Geotech report.

D. Compact pavement by rolling to specified density. Do not displace or extrude pavement from position. Hand compact in areas inaccessible to rolling equipment.

E. Perform rolling with consecutive passes to achieve even and smooth finish without roller marks.

3.06 PLACING ASPHALT PAVEMENT - DOUBLE COURSE

A. Install Work in accordance with County of St. Louis Department of Highways and Traffice standards.

B. Place asphalt binder course to thickness recommended in Geotech report.

C. Place asphalt wearing course within two hours of placing and compacting binder course.

D. Place asphalt wearing course to thickness recommended in Geotech report.

E. Compact pavement by rolling to specified density. Do not displace or extrude pavement from position. Hand compact in areas inaccessible to rolling equipment.

F. Perform rolling with consecutive passes to achieve even and smooth finish, without roller marks.

3.07 TOLERANCES

A. Flatness: Maximum variation of 1/4 inch measured with 10 foot straight edge.

B. Compacted Thickness: Within 1/4 inch of specified or indicated thickness.

C. Variation from True Elevation: Within 1/2 inch.

3.08 FIELD QUALITY CONTROL

A. See Section 014000 - Quality Requirements, for general requirements for quality control.

B. Provide field inspection and testing. Take samples and perform tests in accordance with AI MS-2.

3.09 PROTECTION

A. Immediately after placement, protect pavement from mechanical injury for 2 days or until surface temperature is less than 140 degrees F.

END OF SECTION 321216

SECTION 321313
CONCRETE PAVING

PART 1 GENERAL

1.01 SECTION INCLUDES

A. Concrete sidewalks, ramps, vertical curbs, and parking areas.

1.02 RELATED REQUIREMENTS

A. Section 033000 - Cast-in-Place Concrete: retaining walls, light pole foundations, flag pole foundations, box culverts, and drainage channel head walls .

B. Section 312200 - Grading: Preparation of site for paving and base and preparation of subsoil at pavement perimeter for planting.

C. Section 312323 - Fill: Compacted subbase for paving.

D. Section 321123: Aggregate base course.

E. Section 321713 - Parking Bumpers: Precast concrete parking bumpers.

F. Section 321723.13 - Painted Pavement Markings: Pavement markings.

G. Section 321726 - Tactile Warning Surfacing: Plastic tactile and detectable warning tiles for pedestrian walking surfaces.

1.03 REFERENCE STANDARDS

A. ACI 211.1 - Selecting Proportions for Normal-Density and High Density-Concrete - Guide.

B. ACI 301 - Specifications for Concrete Construction.

C. ACI 304R - Guide for Measuring, Mixing, Transporting, and Placing Concrete.

D. ACI 305R - Guide to Hot Weather Concreting.

E. ACI 306R - Guide to Cold Weather Concreting.

F. ASTM C33/C33M - Standard Specification for Concrete Aggregates.

G. ASTM C39/C39M - Standard Test Method for Compressive Strength of Cylindrical Concrete Specimens.

H. ASTM C94/C94M - Standard Specification for Ready-Mixed Concrete.

I. ASTM C150/C150M - Standard Specification for Portland Cement.

J. ASTM C173/C173M - Standard Test Method for Air Content of Freshly Mixed Concrete by the Volumetric Method.

K. ASTM C260/C260M - Standard Specification for Air-Entraining Admixtures for Concrete.

L. ASTM C618 - Standard Specification for Coal Ash and Raw or Calcined Natural Pozzolan for Use in Concrete.

M. ASTM C685/C685M - Standard Specification for Concrete Made by Volumetric Batching and Continuous Mixing.

N. ASTM C 920 - Standard Specification for Elastomeric Joint Sealants.

O. ASTM D1751 - Standard Specification for Preformed Expansion Joint Filler for Concrete Paving and Structural Construction (Nonextruding and Resilient Asphalt Types).

1.04 QUALIFICATIONS

A. Manufacturer: Company specializing in manufacturing Products specified in this section with minimum three years documented experience.

B. Installer: Company specializing in performing work of this section with minimum three years documented experience.

1.05 SUBMITTALS

A. See Section 013000 - Administrative Requirements, for submittal procedures.

B. Submit proposed concrete mix design test reports.

C. Product Data: Provide data on joint filler, admixtures, and curing compound.

PART 2 PRODUCTS

2.01 FORM MATERIALS

A. Form Materials: Conform to ACI 301.

B. Joint Filler: Preformed; non-extruding bituminous type (ASTM D1751) or sponge rubber or cork (ASTM D1752).
   1. Thickness: 3/4 inch.

2.02 REINFORCEMENT

A. Steel Welded Wire Reinforcement: Plain type, ASTM A1064/A1064M; in flat sheets; galvanized.

2.03 CONCRETE MATERIALS

A. Obtain cementitious materials from same source throughout.

B. Cement: ASTM C150/C150M, Normal - Type I Portland cement, gray color.

C. Fine and Coarse Mix Aggregates: ASTM C33/C33M, Meramec sand only (lignite free).

D. Fly Ash: ASTM C618, Class C or F.

E. Calcined Pozzolan: ASTM C618, Class N.

F. Silica Fume: ACI 211.1.

G. Water: Clean, and not detrimental to concrete.

H. Air-Entraining Admixtures: ASTM C260/C260M.

2.04 ACCESSORIES

A. Joint Sealer: Self-leveling, one part polyurethane in accordance with ASTM C920, Type S, Grade P, Use T.
   1. Acceptable Product: Sonneborn Sonolastic SL1.
   2. Substitutions: See 016000 - Product Requirements.

B. Reinforcement Accessories:
   1. Chairs, Bolsters, Bar Supports, Sacers: Sized and shaped for adequate support of reinforcement during concrete placement.
   2. Provide stainless steel components for placement within 1-1/2 inches of weathering surfaces.

2.05 CONCRETE MIX DESIGN

A. Proportioning Normal Weight Concrete: Comply with ACI 211.1 recommendations.

B. Concrete Strength: Establish required average strength for concrete on the basis of field experience or trial mixtures, as specified in ACI 301.
   1. For trial mixtures method, employ independent testing agency acceptable to Architect for preparing and reporting proposed mix designs.

C. Admixtures: Reducing and Accelerating admixtures will be allowed at the discretion of the Architect and only after review and approval of product information submittal by Contractor. Add acceptable admixtures as recommended in ACI 211.1 and at rates recommended by manufacturer.

D. Concrete Properties:
   1. Compressive strength, when tested in accordance with ASTM C39/C39M at 28 days; 4,000 psi.

2. Total Air Content: minimum 5 percent, determined in accordance with ASTM C 173/C 173M.
3. Maximum Slump: 4 inches.
4. Maximum Aggregate Size: 1 inch.

2.06 MIXING

A. On Project Site: Mix in drum type batch mixer, complying with ASTM C685/C685M. Mix each batch not less than 1-1/2 minutes and not more than 5 minutes.

B. Transit Mixers: Comply with ASTM C94/C94M.

PART 3 EXECUTION

3.01 EXAMINATION

A. Verify compacted granular base or existing asphalt surface is acceptable and ready to support paving and imposed loads.

B. Verify gradients and elevations of base are correct.

C. Field Survey
1. Include in the scope of work for the concrete overlay a field survey of the existing surface elevations to assure that the final overlay is installed to a minimum thickness of 4 inches and that water will drain away from the building sturctures and towards the existing drainage structures.
2. Include in the scope of work additional concrete material to compensate for the undulations of the existing surfaces to receive the concrete overlay as required to maintain a minimum of 4 inches of thickness.

3.02 SUBBASE

A. See Section 321123 - Aggregate Base Courses for construction of base course for work of this Section.

3.03 PREPARATION

A. Moisten base to minimize absorption of water from fresh concrete.

B. Coat surfaces of manhole, handhole, catch basin, handhole, and handhole frames with oil to prevent bond with concrete pavement.

C. Notify Architect minimum 24 hours prior to commencement of concreting operations.

3.04 FORMING

A. Place and secure forms to correct location, dimension, profile, and gradient.

B. Assemble formwork to permit easy stripping and dismantling without damaging concrete.

C. Place joint filler vertical in position, in straight lines. Secure to formwork during concrete placement.

3.05 REINFORCEMENT

A. Place reinforcement at midheight of slabs-on-grade. Utilize Chairs, Bolsters, Bar Suppirts, Spacers sized and shaped for adequate support of reinforcement during concrete placement.

B. Interrupt reinforcement at expansion joints.

3.06 COLD AND HOT WEATHER CONCRETING

A. Follow recommendations of ACI 305R when concreting during hot weather.

B. Follow recommendations of ACI 306R when concreting during cold weather.

C. Do not place concrete when base surface temperature is less than 40 degrees F, or surface is wet or frozen.

3.07 PLACING CONCRETE

A. Place concrete in accordance with ACI 304R.

B. Do not place concrete when base surface is wet.

C. Ensure reinforcement, inserts, embedded parts, formed joints are not disturbed during concrete placement.

D. Place concrete continuously over the full width of the panel and between predetermined construction joints. Do not break or interrupt successive pours such that cold joints occur.

E. Place concrete to pattern indicated.

3.08 JOINTS

A. Align curb, gutter, and sidewalk joints.

B. Place 3/4 inch wide expansion joints at maximum of 20 foot intervals and to separate paving from vertical surfaces and other components and in pattern indicated.
   1. Form joints with joint filler extending from bottom of pavement to within 1/2 inch of finished surface.
   2. Secure to resist movement by wet concrete.

C. Provide sawn joints.
   1. At maximum 5 feet intervals on sidewalks and in pattern indicated.
   2. At pattern indicated on paved areas other than sidewalks.
   3. Between sidewalks and curbs.
   4. Between curbs and pavement.

D. Provide keyed joints as indicated.

E. Saw cut contraction joints 3/16 inch wide at an optimum time after finishing. Cut 1/3 into depth of slab.

3.09 FINISHING

A. Area Paving: Light broom, texture perpendicular to pavement direction.

B. Sidewalk Paving: Light broom, texture perpendicular to direction of travel with troweled and radiused edge 1/4 inch radius.

C. Curbs and Gutters: Light broom, texture parallel to pavement direction.

D. Inclined Ramps: Broomed perpendicular to slope.

3.10 JOINT SEALING

A. Place Joint Sealer after a minimum of 28 days or in accordance with manufacturer's instructions over all joints containing Joint Filler.

3.11 TOLERANCES

A. Maximum Variation of Surface Flatness: 1/4 inch in 10 ft.

B. Maximum Variation From True Position: 1/4 inch.

3.12 FIELD QUALITY CONTROL

A. An independent testing agency will perform field quality control tests, as specified in Section 014000 - Quality Requirements.
   1. Provide free access to concrete operations at project site and cooperate with appointed firm.
   2. Tests of concrete and concrete materials may be performed at any time to ensure compliance with specified requirements.

B. Compressive Strength Tests: ASTM C39/C39M; for each test, mold and cure three concrete test cylinders. Obtain test samples for every 100 cu yd or less of each class of concrete placed.
   1. Take one additional test cylinder during cold weather concreting, cured on job site under same conditions as concrete it represents.
   2. Perform one slump test for each set of test cylinders taken.

C. Maintain records of placed concrete items. Record date, location of pour, quantity, air temperature, and test samples taken.

3.13 PROTECTION

A. Immediately after placement, protect pavement from premature drying, excessive hot or cold temperatures, and mechanical injury.

B. Do not permit pedestrian or vehicular traffic over pavement for 7 days minimum after finishing.

END OF SECTION 321313

SECTION 321713
PARKING BUMPERS

PART 1 GENERAL

1.01 SECTION INCLUDES

A. Precast concrete parking bumpers and anchorage.

1.02 REFERENCE STANDARDS

A. ASTM A615/A615M - Standard Specification for Deformed and Plain Carbon-Steel Bars for Concrete Reinforcement.

B. ASTM C33/C33M - Standard Specification for Concrete Aggregates.

C. ASTM C150/C150M - Standard Specification for Portland Cement.

D. ASTM C260/C260M - Standard Specification for Air-Entraining Admixtures for Concrete.

PART 2 PRODUCTS

2.01 MATERIALS

A. Parking Bumpers: Precast concrete, complying with the following:
   1. Nominal Size: 5 inches high, 9 inches wide, 6 feet long.
   2. Profile: Rectangular with chamfered top corners.
   3. Cement: ASTM C150/C150M, Portland Type I - Normal; white color.
   4. Concrete Materials: ASTM C33 aggregate, water, and sand.
   5. Reinforcing Steel: ASTM A615/A615M, deformed steel bars; unfinished, strength and size commensurate with precast unit design.
   6. Air Entrainment Admixture: ASTM C260/C260M.
   7. Concrete Mix: Minimum 5,000 psi compressive strength after 28 days, air entrained to 5 to 7 percent.
   8. Use rigid molds, constructed to maintain precast units uniform in shape, size and finish. Maintain consistent quality during manufacture.
   9. Embed reinforcing steel, and drill or sleeve for two dowels.
   10. Cure units to develop concrete quality, and to minimize appearance blemishes such as non-uniformity, staining, or surface cracking.
   11. Minor patching in plant is acceptable, providing appearance of units is not impaired.

B. Dowels: Cut reinforcing steel, 1/2 inch diameter, 18 inch long, pointed tip.

PART 3 EXECUTION

3.01 INSTALLATION

A. Install units without damage to shape or finish. Replace or repair damaged units.

B. Install units in alignment with adjacent work.

C. Fasten units in place with 2 dowels per unit.

END OF SECTION 321713

SECTION 321723.13
PAINTED PAVEMENT MARKINGS

PART 1 GENERAL

1.01 SECTION INCLUDES

A. Parking lot markings, including parking bays, crosswalks, arrows, handicapped symbols, and curb markings.

B. Roadway lane markings and crosswalk markings.

1.02 RELATED REQUIREMENTS

A. Section 321216 - Asphalt Paving.

B. Section 321313 - Concrete Paving.

1.03 REFERENCE STANDARDS

A. MPI (APL) - Master Painters Institute Approved Products List; Master Painters and Decorators Association.

B. MPI (GPS-1 and GPS-2) - Master Painters Institute Approved Products Standards; Master Painters and Decorators Association; current edition, www.paintinfo.com.

C. FHWA MUTCD - Manual on Uniform Traffic Control Devices.

1.04 SUBMITTALS

A. See Section 013000 - Administrative Requirements, for submittal procedures.

B. Product Data: Manufacturer's data sheets on each product to be used, including:
   1. Preparation instructions and recommendations.
   2. Storage and handling requirements and recommendations.
   3. Installation methods.

C. Certificates: Submit for each batch of paint stating compliance with specified requirements for meeting MPI GPS-1 and GPS-2.

1.05 DELIVERY, STORAGE, AND HANDLING

A. Deliver paint in containers of at least 5 gallons accompanied by batch certificate.

B. Store products in manufacturer's unopened packaging until ready for installation.

C. Store and dispose of solvent-based materials, and materials used with solvent-based materials, in accordance with requirements of local authorities having jurisdiction.

1.06 FIELD CONDITIONS

A. Do not install products under environmental conditions outside manufacturer's absolute limits.

PART 2 PRODUCTS

2.01 MATERIALS

A. Line and Zone Marking Paint: MPI No. 97 Latex Traffic Marking Paint meeting requirements of MPI GPS-1 and GPS-2; color(s) as indicated.
   1. Roadway Markings: As required by authorities having jurisdiction or as indicated on drawings.
   2. Parking Lots: White or as indicated on drawings.
   3. Handicapped Symbols: Blue.

PART 3 EXECUTION

3.01 EXAMINATION

A. Do not begin installation until substrates have been properly prepared.

B. If substrate preparation is the responsibility of another installer, notify Architect of unsatisfactory preparation before proceeding.

3.02 PREPARATION

A. Prepare surfaces using the methods recommended by the manufacturer for achieving the best result for the substrate under the project conditions.

B. Clean surfaces thoroughly prior to installation.
   1. Remove dust, dirt, and other granular surface deposits by sweeping, blowing with compressed air, rinsing with water, or a combination of these methods.
   2. Completely remove rubber deposits, existing paint markings, and other coatings adhering to the pavement, by scraping, wire brushing, sandblasting, mechanical abrasion, or approved chemicals.
   3. Sandblasting: Use equipment of size and capacity necessary, providing not less than 150 cfm of air at pressure not less than 90 psi at each nozzle used.

C. Where oil or grease are present, scrub affected areas with several applications of trisodium phosphate solution or other approved detergent or degreaser, and rinse thoroughly after each application; after cleaning, seal oil-soaked areas with cut shellac to prevent bleeding through the new paint.

D. Establish survey control points to determine locations and dimensions of markings; provide templates to control paint application by type and color at necessary intervals.

E. Temporary Pavement Markings: When required or directed by Architect, apply temporary markings of the color(s), width(s) and length(s) as indicated or directed.
   1. After temporary marking has served its purpose, remove temporary marking by carefully controlled sandblasting, approved grinding equipment, or other approved method so that surface to which the marking was applied will not be damaged.
   2. At Contractor's option, temporary marking tape may be used in lieu of temporary painted marking; remove unsatisfactory tape and replace with painted markings at no additional cost to Owner.

3.03 INSTALLATION

A. Begin pavement marking as soon as practicable after surface has been cleaned and dried.

B. Do not apply paint if temperature of surface to be painted or the atmosphere is less than 50 degrees F or more than 95 degrees F.

C. Apply in accordance with manufacturer's instructions using an experienced technician that is thoroughly familiar with equipment, materials, and marking layouts.

D. Comply with FHWA MUTCD manual (http://mutcd.fhwa.dot.gov) for details not shown.

E. Apply markings in locations determined by measurement from survey control points; preserve control points until after markings have been accepted.

F. Apply uniformly painted markings of color(s), lengths, and widths as indicated on drawings true, sharp edges and ends.
   1. Apply paint in one coat only.
   2. Wet Film Thickness: 0.015 inch, minimum.
   3. Length Tolerance: Plus or minus 3 inches.
   4. Width Tolerance: Plus or minus 1/8 inch.

G. Roadway Traffic Lanes: Use suitable mobile mechanical equipment that provides constant agitation of paint and travels at controlled speeds.
   1. Conduct operations in such a manner that necessary traffic can move without hindrance.
   2. Place warning signs at the beginning of the wet line, and at points well in advance of the marking equipment for alerting approaching traffic from both directions. Place small flags or other similarly effective small objects near freshly applied markings at frequent intervals to reduce crossing by traffic.
   3. If paint does not dry within expected time, discontinue paint operations until cause of slow drying is determined and corrected.

4. Skip Markings: Synchronize one or more paint "guns" to automatically begin and cut off paint flow; make length of intervals as indicated.
5. Use hand application by pneumatic spray for application of paint in areas where a mobile paint applicator cannot be used.

H. Parking Lots: Apply parking space lines, entrance and exit arrows, painted curbs, and other markings indicated on drawings.
1. Mark the International Handicapped Symbol at indicated parking spaces.
2. Hand application by pneumatic spray is acceptable.

I. Symbols: Use a suitable template that will provide a pavement marking with true, sharp edges and ends, of the design and size indicated.

3.04 DRYING, PROTECTION, AND REPLACEMENT

A. Protect newly painted markings so that paint is not picked up by tires, smeared, or tracked.

B. Provide barricades, warning signs, and flags as necessary to prevent traffic crossing newly painted markings.

C. Allow paint to dry at least the minimum time specified by the applicable paint standard and not less than that recommended by the manufacturer.

D. Remove and replace markings that are applied at less than minimum material rates; deviate from true alignment; exceed length and width tolerances; or show light spots, smears, or other deficiencies or irregularities.

E. Remove markings in manner to avoid damage to the surface to which the marking was applied, using carefully controlled sand blasting, approved grinding equipment, or other approved method.

F. Replace removed markings at no additional cost to Owner.

END OF SECTION 321723.13

SECTION 321726
TACTILE WARNING SURFACING

PART 1 GENERAL

1.01 SECTION INCLUDES

A. Plastic tactile and detectable warning tiles for pedestrian walking surfaces.

1.02 RELATED REQUIREMENTS

A. Section 321313 - Concrete Paving: Concrete sidewalks.

B. Section 321723.13 - Painted Pavement Markings: Crosswalk and curb markings.

1.03 REFERENCE STANDARDS

A. 49 CFR 37 - Transportation Services for Individuals with Disabilities (ADA).

B. AASHTO LRFD - Bridge Design Specifications.

C. ADA Standards - 2010 ADA Standards for Accessible Design.

D. ASTM B117 - Standard Practice for Operating Salt Spray (Fog) Apparatus.

E. ASTM C501 - Standard Test Method for Relative Resistance to Wear of Unglazed Ceramic Tile by the Taber Abraser.

F. ASTM C903 - Standard Practice for Preparing Refractory Specimens by Cold Gunning.

G. ASTM D543 - Standard Practices for Evaluating the Resistance of Plastics to Chemical Reagents.

H. ASTM D570 - Standard Test Method for Water Absorption of Plastics.

I. ASTM D790 - Standard Test Methods for Flexural Properties of Unreinforced and Reinforced Plastics and Electrical Insulating Materials.

J. ASTM D1308 - Standard Test Method for Effect of Household Chemicals on Clear and Pigmented Coating Systems.

K. ASTM D2047 - Standard Test Method for Static Coefficient of Friction of Polish-Coated Flooring Surfaces as Measured by the James Machine.

L. ASTM E84 - Standard Test Method for Surface Burning Characteristics of Building Materials.

M. ASTM G155 - Standard Practice for Operating Xenon Arc Lamp Apparatus for Exposure of Materials.

N. ATBCB PROWAG - Accessibility Guidelines for Pedestrian Facilities in the Public Right-of-Way.

O. FED-STD-595C - Colors Used in Government Procurement (Fan Deck)..

1.04 SUBMITTALS

A. See Section 013000 - Administrative Requirements, for submittal procedures.

B. Product Data: Submit manufacturer's product data, standard details, details specific to this project; written installation and maintenance instructions.

C. Shop Drawings: Submit plan and detail drawings. Indicate:
   1. Locations on project site. Demonstrate compliance with referenced accessibility standards.
   2. Sizes and layout.
   3. Pattern spacing and orientation.
   4. Attachment and fastener details, if applicable

D. Warranty: Submit manufacturer warranty; complete forms in Owner's name and register with manufacturer.

1.05 QUALITY ASSURANCE

A. Manufacturer Qualifications: Company specializing in manufacturing products specified in this section, with not less than five years documented experience.

1.06 DELIVERY, STORAGE, AND HANDLING

A. Deliver to project site in manufacturer's protective wrapping and in manufacturer's unopened packaging.

B. Store covered and elevated above grade and in manufacturer's unopened packaging until ready for installation. Maintain at ambient temperature between 40 and 90 degrees F.

1.07 WARRANTY

A. See Section 017800 - Closeout Submittals, for additional warranty requirements.

B. Plastic Tiles: Provide manufacturer's standard five year warranty against manufacturing defects, breakage or deformation.

PART 2 PRODUCTS

2.01 MANUFACTURERS

A. Plastic Tactile and Detectable Warning Surface Tiles:
   1. Armor-Tile, a brand of Engineered Plastics, Inc: www.armortiletransit.com.
   2. Vanguard ADA Systems: www.vanguardonline.com.
   3. Substitutions: See Section 016000 - Product Requirements.

2.02 TACTILE AND DETECTABLE WARNING DEVICES

A. Plastic Tactile and Detectable Warning Tiles: ADA compliant, epoxy polymer composition with an ultra-violet coating employing aluminum oxide particles in the truncated domes, exterior grade, matte finish polyester sheet with truncated dome pattern, solid color throughout, internal reinforcing of sheet and of truncated domes, integral radius cut lines on back face of tile; with factory applied removable protective sheeting.
   1. Material Properties:
      a. Water Absorption: 0.20 percent, maximum, when tested in accordance with ASTM D570.
      b. Slip Resistance: 0.50 minimum dry static coefficient of friction, when tested in accordance with ASTM D2047.
      c. Flexural Strength: 25,000 pounds per square inch minimum, when tested in accordance with ASTM D790.
      d. Chemical Stain Resistance: No reaction to 1 percent hydrochloric acid, motor oil, calcium chloride, gum, soap solution, bleach, or antifreeze, when tested in accordance with ASTM D543.
      e. Chemical Stain Resistance: No reaction to 1 percent hydrochloric acid, motor oil, calcium chloride, gum, soap solution, bleach, or antifreeze, when tested in accordance with ASTM D1308.
      f. Abrasion Resistance: 300, minimum, when tested in accordance with ASTM C501.
      g. Flame Spread Index: 25, maximum, when tested in accordance with ASTM E84.
      h. Accelerated Weathering: Delta-E of less than 5.0 at 2,000 hours exposure, when tested in accordance with ASTM G155.
      i. Adhesion: No delamination of tile prior to board failure in a temperature range of 20 to 180 degrees F, when tested in accordance with ASTM C903.
      j. Loading: No damage when tested according to AASHTO LRFD test method HS20.
      k. Salt and Spray Performance: No deterioration or other defect after 200 hours of exposure, when tested in accordance with ASTM B117.
   2. Installation Method: surface applied where indicated on drawings.
   3. Shape: Rectangular.
   4. Dimensions: As required to meet the shapes indicated to produce the least amount of joints possible.

5. Pattern: Staggered pattern of truncated domes complying with ADA Standards.
6. Edge: Square.
7. Joint: Butt.
8. Color: FED-STD 595C, Table IV, Colonial Red No. 20109.

2.03 ACCESSORIES

A. Fasteners: Nylon sleeve, nylon pin expansion anchors ¼ inch diameter by 1-9/16 inch long provided by manufacturer.

B. Adhesive: Type recommended and approved by surfacing tile manufacturer.

C. Sealant: Elastomeric sealant of color to match adjacent surfaces; approved by surfacing tile manufacturer.

PART 3 EXECUTION

3.01 EXAMINATION

A. When installation location is near site boundary or property line, verify required location using property survey.

B. Verify that work area is ready to receive work:
   1. If existing conditions are not as required to properly complete the work of this section, notify Architect.
   2. Do not proceed with installation until deficiencies in existing conditions have been corrected.

C. Verify that dimensions, tolerances, and attachment methods for work in this section are properly coordinated with other work on site.

3.02 INSTALLATION, GENERAL

A. Install in accordance with manufacturer's written instructions.
   1. Do not install damaged, warped, bowed, dented, abraded, or otherwise defective units.
   2. Do not install when ambient or substrate temperature has been below 40 degrees F during the preceding 8 daylight hours.

B. Field Adjustment:
   1. Cut units to size and configuration shown on drawings.
   2. Do not cut tiles to less than 9 inches wide in any direction.
   3. Locate relative to curb line in compliance with ATBCB PROWAG, Sections 304 and 305.
   4. Orient so dome pattern is aligned with the direction of ramp.
   5. Align truncated dome pattern between adjacent units.

C. Install units fully seated to substrate, square to straight edges and flat to required slope.

D. Align units so that tops of adjacent units are flush and joints between units are uniform in width.

3.03 INSTALLATION, SURFACE APPLIED PLASTIC TILES

A. Verify substrate is clean and dry; free of voids, projections and loose material; remove dust, oil, grease, curing compounds, sealers and other substances that may interfere with adhesive bond or sealant adhesion.

B. Mechanically roughen surface as required to remove contaminants and prepare surface for adhesive and sealant application.

C. Drill fastener holes straight, true and to depth recommended by manufacturer.

D. Apply adhesive to back of unit as recommended by manufacturer.

E. Mechanically fasten to substrate in accordance with manufacturer's written instructions; avoid striking or damaging the unit itself during installation.

F. Apply sealant to edges in cove profile.

3.04 CLEANING PLASTIC UNITS

A. Remove protective plastic sheeting no sooner than 48 hours after installation.

B. Remove excess sealant or adhesive from joints and edges.

C. Clean four days prior to date of scheduled inspection.

3.05 PROTECTION

A. Protect installed units from traffic, subsequent construction operations or other imposed loads until concrete is fully cured.

B. Touch-up, repair or replace damaged products prior to Date of Substantial Completion.

END OF SECTION 321726

SECTION 323113
CHAIN LINK FENCES AND GATES

PART 1 GENERAL

1.01 SECTION INCLUDES

A. Posts, rails, and frames.

B. Excavation for post bases; concrete foundation for posts.

C. Concrete.

D. Manual gates with related hardware.

E. Automatic gate operators.

F. Accessories.

1.02 REFERENCE STANDARDS

A. ASTM A123/A123M - Standard Specification for Zinc (Hot-Dip Galvanized) Coatings on Iron and Steel Products.

B. ASTM A153/A153M - Standard Specification for Zinc Coating (Hot-Dip) on Iron and Steel Hardware.

C. ASTM C94/C94M - Standard Specification for Ready-Mixed Concrete.

D. ASTM F567 - Standard Practice for Installation of Chain-Link Fence.

E. ASTM F1043 - Standard Specification for Strength and Protective Coatings on Steel Industrial Fence Framework.

F. ASTM F2200 - Standard Specification for Automated Vehicular Gate Construction.

G. CLFMI CLF-FIG0111 - Field Inspection Guide.

H. FS RR-F-191/1D - Fencing, Wire and Post Metal (Chain-Link Fence Fabric).

I. NEMA EN 10250 - Enclosures for Electrical Equipment (1000 Volts Maximum).

J. NFPA 70 - National Electrical Code.

K. UL 50 - Enclosures for Electrical Equipment, Non-Environmental Considerations.

L. UL 50E - Enclosures for Electrical Equipment, Environmental Considerations.

M. UL 325 - Standard for Door, Drapery, Gate, Louver, and Window Operators and Systems.

1.03 SUBMITTALS

A. See Section 013000 - Administrative Requirements, for submittal procedures.

B. Product Data: Provide data on fabric, posts, accessories, fittings and hardware.

1.04 QUALITY ASSURANCE

A. Manufacturer Qualifications: Company specializing in manufacturing products specified in this section, with not less than three years of documented experience.

1.05 WARRANTY

A. See Section 017800 - Closeout Submittals, for additional warranty requirements.

B. Provide five year manufacturer warranty for automatic gate operator.

PART 2 PRODUCTS

2.01 MANUFACTURERS

A. Chain Link Fences and Gates:
   1. Tymetal Corp; The Fortress Heavy Duty Cantilever Slide Gate; www.tymetal.com/#sle..
   2. The Chamberlain Group, LLC; LiftMaster Elite Series; www.liftmaster.com
   3. Collins & Hermann Infrastructure Solutions; Motorized Cantilevered Slide Gate; www.collinsandhermann.com

4. Substitutions: See Section 016000 - Product Requirements.

B. Automatic Gate Operators:
   1. Tymetal Corp; The Fortress Heavy Duty Cantilever Slide Gate: www.tymetal.com/#sle.
   2. The Chamberlain Group, LLC; LiftMaster Elite Series CSL24UL; www.liftmaster.com.
   3. Collins & Hermann Infrastructure Solutions; Motorized Cantilevered Slide Gate; www.collinsandhermann.com.
   4. Substitutions: See Section 016000 - Product Requirements.

2.02 COMPONENTS

A. Line Posts: 1.9 inch diameter.

B. Corner and Terminal Posts: 2.38 inch diameter.

C. Gate Posts: 3-1/2 inch diameter.

D. Top and Brace Rail: 1.66 inch diameter, plain end, sleeve coupled.

E. Bottom Rail: 1.66 inch diameter, plain end, sleeve coupled.

F. Gate Frame: 1.66 inch diameter for welded fabrication.

G. Fabric: 2 inch diamond mesh interwoven wire, 9 gauge, 0.1483 inch thick, top selvage knuckle end closed, bottom selvage knuckle end closed.

H. Tension Wire: 6 gauge, 0.1920 inch thick steel, single strand.

I. Tie Wire: Aluminum alloy steel wire.

2.03 MATERIALS

A. Posts, Rails, and Frames: ASTM F1083 Schedule 40 hot-dipped galvanized steel pipe, welded construction, minimum yield strength of 50 ksi for sizes NPS 5 and larger

B. Line Posts: Type I round in accordance with FS RR-F-191/1D.

C. Terminal, Corner, Rail, Brace, and Gate Posts: Type I round in accordance with FS RR-F-191/1D.

D. Wire Fabric: ASTM F 668 polymer-coated, class 2B fused and bonded steel chain link fabric.

E. Concrete: Ready-mixed, complying with ASTM C94/C94M; normal Portland cement; 3,000 psi strength at 28 days, 3 inch slump; 1 inch nominal size aggregate.

2.04 MANUAL GATES AND RELATED HARDWARE

A. Hardware for Single Swinging Gates: 180 degree hinges, 2 for gates up to 60 inches high, 3 for taller gates; fork latch with gravity drop and padlock hasp; keeper to hold gate in fully open position.

B. Hardware for Double Swinging Gates: 180 degree hinges, 2 for gates up to 60 inches high, 3 for taller gates; drop bolt on inactive leaf engaging socket stop set in concrete, active leaf latched to inactive leaf preventing raising of drop bolt, padlock hasp; keepers to hold gate in fully open position.

C. Hinges: Finished to match fence components.
   1. Brackets: Round.
   2. Mounting: Center.
   3. Closing: Manual.

D. Latches: Finished to match fence components.
   1. Brackets: Round.
   2. Locking: Mechanical.

2.05 AUTOMATIC GATE OPERATORS

A. Swinging Gates: Pre-wired, pedestal mounted gate operator for horizontal swinging gates, per ASTM F2200 and UL 325.
   1. Control Functions: Open, pause, and close.

2. Maximum Open/Close Time: 10 seconds.
3. Access: Card.
4. Maximum gate weight: 500 pounds (187 kilograms).
5. Horsepower Rating: Suitable for connected load.
6. Entrapment Protection Devices: Provide sensing devices and safety mechanisms complying with UL 325.
    a. Primary Device: Provide electric sensing edge, wireless sensing, NEMA 1 photo eye sensors, or NEMA 4X photo eye sensors as required with momentary-contact control device.
7. Enclosures: Comply with NEMA EN 10250, and list and label as complying with UL 50 and UL 50E.
    a. Environment Type per NEMA EN 10250: Unless otherwise indicated, as specified for the following installation locations:

B. Sliding Gates: Pre-wired, pedestal mounted gate operator for horizontal sliding gates, per ASTM F2200 and UL 325.
1. Operating type: roller chain.
2. Control Functions: Open, Pause, Close.
3. Maximum Open/Close Time: 30 seconds.
4. Access: Card, Keypad, and Remote.
5. Maximum gate weight: 1,500 pounds (560 kilograms).
6. Horsepower Rating: Suitable for connected load.
7. Entrapment Protection Devices: Provide sensing devices and safety mechanisms complying with UL 325.
    a. Primary Device: Provide electric sensing edge or wireless sensing as required with momentary-contact control device.
8. Enclosures: Comply with NEMA EN 10250, and list and label as complying with UL 50 and UL 50E.
    a. Environment Type per NEMA EN 10250: Unless otherwise indicated, as specified for the following installation locations:
        1) Outdoor Locations, direct splashing: Type 4.
    b. Finish for Painted Steel Enclosures: Powder coated unless otherwise indicated.
9. Monitoring and controls:
    a. Connected access portal, high capacity cloud-based access control.
    b. Monitored small profile resistive edge that stops and/or reverses gate when obstructed.
    c. Monitored wireless edge kit low-energy bluetooth connection between monitored resistive edge and gate operator.
10. Safety Add-Ons:
    a. Monitored through-beam photo eyes and heater
    b. Plug-in loop detector protection from gate closing on a vehicle in the path.
    c. Safety wraparound entrapment large profile monitored edges.
11. Accessories:
    a. Battery backup 33Ah.
    b. Heater kit

2.06 ACCESSORIES

A. Caps: Molded rigid vinyl; sized to post diameter, set screw retainer.

B. Fittings: Sleeves, bands, clips, rail ends, tension bars, fasteners and fittings; steel.

2.07 FINISHES

A. Components (Other than Fabric): Galvanized in accordance with ASTM A123/A123M, at 1.7 ounces per square foot.

B. Components and Fabric: Vinyl coated over coating of 1.8 ounces per square foot galvanizing.

C. Hardware: Hot-dip galvanized to weight required by ASTM A153/A153M.

D. Accessories: Same finish as framing, powder coat accessories which cannot receive vinyl coating.

E. Color(s): To be selected by Owner from manufacturer's full range.

PART 3 EXECUTION

3.01 EXAMINATION

A. Verification of Conditions: Verify that areas are clear of obstructions or debris.

3.02 PREPARATION

A. Removal: Obstructions or debris.

3.03 INSTALLATION

A. Install framework, fabric, accessories and gates in accordance with ASTM F567.

B. Place fabric on outside of posts and rails.

C. Set intermediate, terminal, and gate posts plumb , in concrete footings with top of footing 2 inches above finish grade. Slope top of concrete for water runoff.

D. Line Post Footing Depth Below Finish Grade: ASTM F567.

E. Corner, Gate and Terminal Post Footing Depth Below Finish Grade: ASTM F567.

F. Brace each gate and corner post to adjacent line post with horizontal center brace rail and diagonal truss rods. Install brace rail one bay from end and gate posts.

G. Provide top rail through line post tops and splice with 6 inch long rail sleeves.

H. Install center and bottom brace rail on corner gate leaves.

I. Do not stretch fabric until concrete foundation has cured 7 days.

J. Stretch fabric between terminal posts or at intervals of 100 feet maximum, whichever is less.

K. Position bottom of fabric 2 inches above finished grade.

L. Fasten fabric to top rail, line posts, braces, and bottom tension wire with tie wire at maximum 15 inches on centers.

M. Attach fabric to end, corner, and gate posts with tension bars and tension bar clips.

N. Install bottom tension wire stretched taut between terminal posts.

O. Do not attach the hinged side of gate to building wall; provide gate posts.

P. Install hardware and gate with fabric to match fence.

Q. Provide concrete center drop to footing depth and drop rod retainers at center of double gate openings.

R. Install operator in accordance with manufacturer's instructions and in accordance with NFPA 70.

3.04 TOLERANCES

A. Maximum Variation From Plumb: 1/4 inch.

B. Maximum Offset From True Position: 1 inch.

C. Do not infringe on adjacent property lines.

3.05 FIELD QUALITY CONTROL

A. See Section 014000 - Quality Requirements, for additional requirements.

B. Layout: Verify that fence installation markings are accurate to design, paying attention to gate locations, underground utilities, and property lines.

C. Post Settings: Randomly inspect three locations against design for:
   1. Hole diameter.

2. Hole depth.
3. Hole spacing.

D. Fence Height: Randomly measure fence height at three locations or at areas that appear out of compliance with design.

E. Gates: Inspect for level, plumb, and alignment.

F. Workmanship: Verify neat installation free of defects. See CLFMI CLF-FIG0111 for field inspection guidance.

3.06 CLEANING

A. Clean jobsite of excess materials; scatter excess material from post hole excavations uniformly away from posts. Remove excess material if required.

B. Clean fence with mild household detergent and clean water rinse well.

3.07 CLOSEOUT ACTIVITIES

A. See Section 017800 - Closeout Submittals, for closeout submittals.

B. See Section 017900 - Demonstration and Training, for additional requirements.

C. Demonstrate proper operation of equipment to Owner's designated representative.

D. Training: Train Owner's personnel on operation and maintenance of system.
1. Use operation and maintenance manual as training reference, supplemented with additional training materials as required.
2. Provide minimum of two hours of training.

END OF SECTION 323113

SECTION 323119
DECORATIVE METAL FENCES AND GATES

PART 1 GENERAL

1.01 SECTION INCLUDES

A. Decorative aluminum fences.

B. Automatic gate operators.

C. Excavation for post bases; concrete foundation for posts.

1.02 RELATED REQUIREMENTS

A. Section 312316 - Excavation.

1.03 REFERENCE STANDARDS

A. ASTM A276/A276M - Standard Specification for Stainless Steel Bars and Shapes.

B. ASTM B117 - Standard Practice for Operating Salt Spray (Fog) Apparatus.

C. ASTM B221 - Standard Specification for Aluminum and Aluminum-Alloy Extruded Bars, Rods, Wire, Profiles, and Tubes.

D. ASTM C94/C94M - Standard Specification for Ready-Mixed Concrete.

E. ASTM D523 - Standard Test Method for Specular Gloss.

F. ASTM D714 - Standard Test Method for Evaluating Degree of Blistering of Paints.

G. ASTM D822/D822M - Standard Practice for Filtered Open-Flame Carbon-Arc Exposures of Paint and Related Coatings.

H. ASTM D1654 - Standard Test Method for Evaluation of Painted or Coated Specimens Subjected to Corrosive Environments.

I. ASTM D2244 - Standard Practice for Calculation of Color Tolerances and Color Differences from Instrumentally Measured Color Coordinates.

J. ASTM D2794 - Standard Test Method for Resistance of Organic Coatings to the Effects of Rapid Deformation (Impact).

K. ASTM D3359 - Standard Test Methods for Rating Adhesion by Tape Test.

L. ASTM F2408 - Standard Specification for Ornamental Fences Employing Galvanized Steel Tubular Pickets.

M. NFPA 70 - National Electrical Code.

1.04 SUBMITTALS

A. See Section 013000 - Administrative Requirements, for submittal procedures.

B. Product Data: Submit manufacturer's data sheets on each product to be used, including:
   1. Preparation instructions and recommendations.
   2. Storage and handling requirements and recommendations.
   3. Installation methods.

C. Manufacturer's Extended Warranty.

1.05 QUALITY ASSURANCE

A. Manufacturer Qualifications: Company specializing in manufacturing products specified in this section with minimum five years documented experience.

B. Installer Qualifications: Experienced with type of construction involved and materials and techniques specified.

1.06 DELIVERY, STORAGE AND HANDLING

A. Store materials in a manner to ensure proper ventilation and drainage. Protect against damage, weather, vandalism and theft.

1.07 WARRANTY

A. See Section 017800 - Closeout Submittals, for additional warranty requirements.

B. Finish: Lifetime.

PART 2 PRODUCTS

2.01 MANUFACTURERS

A. Decorative Metal Fences and Gates:
   1. Ameristar Fence Products, Inc: www.ameristarfence.com; Model Echelon Plus.
   2. Elite Fence Products, Inc.: www.elitefence.com; Model EFF-20 industrial.
   3. Collins & Hermann Infrastructure Solutions; Fencing and Cantilevered Slide Gate; www.collinsandhermann.com.
   4. Substitutions: See Section 016000 - Product Requirements.

B. Automatic Gate Operators:
   1. Tymetal Corp; The Fortress Heavy Duty Cantilever Slide Gate:: www.tymetal.com/#sle.
   2. The Chamberlain Group, LLC; LiftMaster Elite Series CSL24UL; www.liftmaster.com..
   3. Collins & Hermann Infrastructure Solutions; Motorized Cantilevered Slide Gate; www.collinsandhermann.com.
   4. Substitutions: See Section 016000 - Product Requirements.

2.02 FENCES

A. Fences: Complete factory-fabricated system of posts and panels, accessories, fittings, and fasteners; finished with electrodeposition coating, and having the following performance characteristics:

B. Thermal Coating: Six-stage pretreatment/wash and an electrostatic spray application of a polyester finish. The topcoat shall be a "no-mar" TGIC polyester powder coat finish.
   1. Topcoat Thickness: 2 mils, minimum.
   2. Coating Performance: Comply with general requirements of ASTM F2408.
      a. Adhesion: ASTM D3359 (Method B); Class 3B with 90 percent or more of coating remaining in tested area.
      b. Corrosion Resistance: ASTM B117, ASTM D714 and ASTM D1654; 1/8 inch coating loss or medium No.8 blisters after 1,500 hours.
      c. Impact Resistance: ASTM D2794; 60 inch pounds.
      d. Weathering Resistance: ASTM D523, ASTM D822/D822M and ASTM D2244; less than 60 percent loss of gloss.

C. Aluminum: ASTM B221.
   1. Tubular Pickets, Rails and Posts: 6005-T5 alloy.
   2. Extrusions for Posts and Rails (Outer Channel): 6005-T5 alloy.
   3. Extrusions for Pickets and Rail (Inner Slide Channels): 6063-T5 alloy.

D. Fasteners: ASTM A276/A276M, Type 302 stainless steel; finished to match fence components.
   1. Tamper-proof security bolts.
   2. Self-drilling hex-head screws.

E. Concrete: Ready-mixed, complying with ASTM C94/C94M; normal Portland cement; 3,000 psi strength at 28 days, 3 inch slump; 1 inch nominal size aggregate.

2.03 ALUMINUM FENCE

A. Decorative Aluminum Fence System: Provide fence meeting the Test Load and Coating Performance requirements of ASTM F2408 for Industrial class.

B. Fence Panels: 4 feet high by 4 feet long.
   1. Panel Style: three rail without extended pickets.
      a. Use three rail without extended pickets for fencing less than 6 ft. in height.
   2. Panel Strength: Capable of supporting 270 pounds minimum load applied at midspan without deflection.

3. Attach panels to posts with manufacturer's standard panel brackets and recommended fasteners.

C. Posts: Aluminum extrusions; 2-1/2 inches square, 0.080 inch wall thickness, with internal reinforcing.

D. Rails: Extruded aluminum channels.
   1. "ForeRunner" design; outside cross-section dimensions of 1-3/4 inch square; interior guide channel forms lower limit of raceway for retaining rod.
   2. Effective Wall Thickness:
      a. Top Wall of Outer Channel: 0.100 inch thick.
      b. Side Wall: 0.120 inch thick.
      c. Inner Slide Channel: 0.080 inch thick.
   3. Enclosed Retaining Rod: 1/8 inch diameter galvanized steel with variable pitch connection system for high angle racking and elimination of external fasteners.
   4. Picket-to-Rail Intersection Seals: PVC grommets.
   5. Picket Spacing, Standard: 3-7/8 inch on center.

E. Pickets: Extruded aluminum tubes.
   1. Size: 1 inch square.
   2. Style: Square top pickets extend above top rail.

F. Fasteners: Manufacturer's standard stainless steel bolts, screws, and washers; factory finish fasteners to match fence.

G. Gates:
   1. Posts: 3 inch square by 0.120 inch thick extruded aluminum tubing.
   2. Rails: "ForeRunner" style, 1-3/4 inch square, reinforced.
   3. Ends: 1-34 inch square by 0.250 inch thick extruded aluminum tubing.
   4. Pickets: 1 inch square by 0.125 inch thick extruded aluminum tubing.
   5. All picket and rail intersections shall be joined by welding.

H. Accessories: Aluminum castings, extrusions, and cold-formed strips; factory finished to match fence.
   1. Flat post cap with set screw.

I. Flexibility: Capable of following variable slope of up to 1:4.

J. Color: Manufacturer's standard, factory applied Black.

2.04 AUTOMATIC GATE OPERATORS

PART 3 EXECUTION

3.01 EXAMINATION

A. Do not begin installation until substrates have been properly prepared.

B. If substrate preparation is the responsibility of another installer, notify Architect of unsatisfactory preparation before proceeding.

3.02 PREPARATION

A. Clean surfaces thoroughly prior to installation.

3.03 INSTALLATION

A. Install in accordance with manufacturer's instructions.

B. Set fence posts in accordance with the manufacturer recommended spacing.
   1. To achieve plumbness, use aluminum shims only.

C. When cutting rails immediately seal the exposed surfaces by:
   1. Removing metal shavings from cut area.
   2. Apply zinc-rich primer to thoroughly cover cut edge and drilled hole; allow to dry.
   3. Apply two coats of custom finish spray paint matching fence color.

4. Failure to seal exposed surfaces in accordance with manufacturer's instructions will negate manufacturer's warranty.

D. Space gate posts according to the manufacturers' drawings, dependent on standard out-to-out gate leaf dimensions and gate hardware selected.
   1. Base type and quantity of gate hinges on the application, weight, height, and number of gate cycles.
   2. Identify the necessary hardware required for the application on the manufacturer's gate drawings.
   3. Provide gate hardware by the manufacturer of the gate and install in compliance with manufacturer's recommendations.

E. Install operator in accordance with manufacturer's instructions and in accordance with NFPA 70.

3.04 TOLERANCES

A. Maximum Variation From Plumb: 1/4 inch.

B. Maximum Offset From Indicated Position: 1 inch.

3.05 FIELD QUALITY CONTROL

A. See Section 014000 - Quality Requirements, for additional requirements.

B. Layout: Verify that fence installation markings are accurate to design, paying attention to gate locations, underground utilities, and property lines.

C. Post Settings: Randomly inspect three locations against design for:
   1. Hole diameter.
   2. Hole depth.
   3. Hole spacing.

D. Fence Height: Randomly measure fence height at three locations or at areas that appear out of compliance with design.

E. Gates: Inspect for level, plumb, and alignment.

3.06 CLEANING

A. Leave immediate work area neat at end of work day.

B. Clean jobsite of excess materials; scatter excess material from post hole excavations uniformly away from posts. Remove excess material if required.

C. Clean fence with mild household detergent and clean water rinse well.

D. Remove mortar from exposed posts and other fencing material using a 10 percent solution of muriatic acid followed immediately by several rinses with clean water.

E. Touch up scratched surfaces using materials recommended by manufacturer. Match touched-up paint color to factory-applied finish.

F. See Section 017419 - Construction Waste Management and Disposal, for additional requirements.

3.07 CLOSEOUT ACTIVITIES

A. See Section 017800 - Closeout Submittals, for closeout submittals.

B. See Section 017900 - Demonstration and Training, for additional requirements.

C. Demonstrate proper operation of equipment to Owner's designated representative.

3.08 PROTECTION

A. Protect installed products until completion of project.

B. Touch-up, repair, or replace damaged products before Date of Substantial Completion.

END OF SECTION 323119

SECTION 323223
SEGMENTAL RETAINING WALLS

PART 1 GENERAL

1.01 SECTION INCLUDES

A. Segmental retaining walls made of modular concrete units with or without soil reinforcement.

B. Subdrainage pipe behind retaining wall.

C. Shop drawings.

D. Retaining wall units.

E. Drainage filter.

1.02 PRICE AND PAYMENT PROCEDURES

A. Excavation of unsuitable soil and replacement with acceptable fill will be paid for at unit prices specified in Section 312316 - Excavation.

1.03 RELATED REQUIREMENTS

A. Section 311000 - Site Clearing: Removal of unwanted trees, bushes, and debris.

B. Section 312200 - Grading: Rough and finish grading.

C. Section 312316 - Excavation.

D. Section 312323 - Fill.

1.04 REFERENCE STANDARDS

A. AASHTO M 288 - Standard Specification for Geosynthetics for Highway Applications.

B. AASHTO NTPEP - National Transportation Product Evaluation Program.

C. ASCE 7 - Minimum Design Loads and Associated Criteria for Buildings and Other Structures.

D. ASTM C1372 - Standard Specification for Dry-Cast Segmental Retaining Wall Units.

E. ASTM D448 - Standard Classification for Sizes of Aggregate for Road and Bridge Construction.

F. ASTM D698 - Standard Test Methods for Laboratory Compaction Characteristics of Soil Using Standard Effort (12,400 ft-lbf/ft3 (600 kN-m/m3)).

G. ASTM D1241 - Standard Specification for Materials for Soil-Aggregate Subbase, Base, and Surface Courses.

H. ASTM D1557 - Standard Test Methods for Laboratory Compaction Characteristics of Soil Using Modified Effort (56,000 ft-lbf/ft3 (2,700 kN-m/m3)).

I. ASTM D2487 - Standard Practice for Classification of Soils for Engineering Purposes (Unified Soil Classification System).

J. ASTM D3034 - Standard Specification for Type PSM Poly(Vinyl Chloride) (PVC) Sewer Pipe and Fittings.

K. ASTM D4318 - Standard Test Methods for Liquid Limit, Plastic Limit, and Plasticity Index of Soils.

L. ASTM D4491/D4491M - Standard Test Methods for Water Permeability of Geotextiles by Permittivity.

M. ASTM D4595 - Standard Test Method for Tensile Properties of Geotextiles by the Wide-Width Strip Method.

N. ASTM D4595 - Standard Test Method for Tensile Properties of Geotextiles by the Wide-Width Strip Method.

O. ASTM D4632/D4632M - Standard Test Method for Grab Breaking Load and Elongation of Geotextiles.

P. ASTM D4751 - Standard Test Methods for Determining Apparent Opening Size of a Geotextile.

Q. ASTM D5262 - Standard Test Method for Determining the Unconfined Tension Creep and Creep Rupture Behavior of Planar Geosynthetics Used for Reinforcement Purposes.

R. ASTM D5262 - Standard Test Method for Determining the Unconfined Tension Creep and Creep Rupture Behavior of Planar Geosynthetics Used for Reinforcement Purposes.

S. ASTM D5321/D5321M - Standard Test Method for Determining the Shear Strength of Soil-Geosynthetic and Geosynthetic-Geosynthetic Interfaces by Direct Shear.

T. ASTM D5818 - Standard Practice for Exposure and Retrieval of Samples to Evaluate Installation Damage of Geosynthetics.

U. ASTM D5818 - Standard Practice for Exposure and Retrieval of Samples to Evaluate Installation Damage of Geosynthetics.

V. ASTM D6638 - Standard Test Method for Determining Connection Strength Between Geosynthetic Reinforcement and Segmental Concrete Units (Modular Concrete Blocks).

W. ASTM D6638 - Standard Test Method for Determining Connection Strength Between Geosynthetic Reinforcement and Segmental Concrete Units (Modular Concrete Blocks).

X. ASTM D6706 - Standard Test Method for Measuring Geosynthetic Pullout Resistance in Soil.

Y. ASTM D6916 - Standard Test Method for Determining the Shear Strength Between Segmental Concrete Units (Modular Concrete Blocks).

Z. ASTM D7928 - Standard Test Method for Particle-Size Distribution (Gradation) of Fine-Grained Soils Using the Sedimentation (Hydrometer) Analysis.

AA. ASTM F667/F667M - Standard Specification for 3 through 24 in. Corrugated Polyethylene Pipe and Fittings.

BB. NCMA TR-127 - Design Manual for Segmental Retaining Walls 3rd Edition.

1.05 SUBMITTALS

A. See Section 013000 - Administrative Requirements, for submittal procedures.

B. Segmental Retaining Wall Units:
   1. Manufacturer's product data.

C. Retaining Wall Design Engineer Qualifications and Statement of Experience.

D. Shop Drawings: Engineering drawings for installation, including elevations, large-scale details of elevations, typical sections, details, and connections, soil reinforcement, and drainage provisions.
   1. Include marked up contract drawings showing exact dimensions for blocks, required coping, and other minor revisions.
   2. Design Data: Submit detailed design calculations showing compliance with specified design criteria and material evaluations performed in accordance with specified design standard, signed and sealed by Design Engineer.
   3. Temporary Support System: Engineering drawings and detailed design calculations for specific load bearing falsework, underpinning, needling, or shoring layout and support members, if necessary, appropriate for Project conditions.
   4. Submit no less than 2 weeks prior to start of work.
   5. Obtain approval of Architect prior to start of work.

E. Permit: Obtain permit from authorities having jurisdiction prior to start of work and submit copy of permit.

1.06 QUALITY ASSURANCE

A. Retaining Wall Design Engineer Qualifications: Provide design by or under direct supervision of Professional Engineer experienced in the work of this section and licensed in the State in which the Project is located and:
   1. Having minimum of five years documented experience in design of reinforced soil structures.

B. Manufacturer Qualifications -- Concrete Units: Firm specializing in manufacturing products specified in this section and:
   1. With not less than 3 years experience.

C. Installer Qualifications: Firm specializing in design and installation of segmental retaining walls and:
   1. With not less than 3 years documented experience.
   2. Approved by retaining wall system manufacturer.

1.07 DELIVERY, STORAGE, AND HANDLING

A. Store products above ground on wood pallets or blocking, in manufacturer's unopened packaging, until ready for installation.

B. Prevent excessive soil and mud from coming in contact with face of concrete units.

C. Polymeric Materials: Store at temperatures above minus 20 degrees F; rolled materials may be laid flat or stood on end.

D. Protect material from damage, do not use damaged material.

E. Remove damaged material from the site.

F. Store and dispose of solvent-based materials, and materials used with solvent-based materials, in accordance with requirements of local authorities having jurisdiction.

PART 2 PRODUCTS

2.01 MANUFACTURERS

A. Segmental Retaining Walls:
   1. Anchor Wall Systems, Inc.: www.anchorwall.com.
   2. Keystone Retaining Wall Systems, Inc.: www.keystonewalls.com.
   3. Versa-Lok Retaining Wall Systems: www.versa-lok.com.
   4. N/A
   5. Substitutions: See Section 016000 - Product Requirements.
   6. Reinforcement shall have AASHTO NTPEP approval.

2.02 RETAINING WALLS

A. Contractor is responsible for design of the retaining walls.
   1. Design to required horizontal and vertical alignment as indicated on drawings.

B. Design Standard: Design retaining walls to be capable of withstanding the effects of gravity loads due to soil pressures resulting from grades indicated, determined in accordance with:
   1. NCMA TR-127.
   2. Include effects of sloped backfill as indicated on drawings.
   3. Include effects of superimposed loads (surcharge) as indicated on drawings.
   4. In addition, comply with applicable local, state, and federal codes and regulations.
   5. This design method considers potential failure modes categorized by external, internal, local, compound, and global stability.
   6. Architect has considered global stability and has indicated minimum design requirements in Contract Documents.
   7. Seismic Stability: Perform analysis in accordance with ASCE 7.
   8. Factor of Safety:
      a. External Stability:
         1) Base Sliding = 1.5
         2) Overturning = 1.5
         3) Bearing Capacity = 2.0
         4) Global Stability = 1.3
      b. Internal Stability:
         1) Shear Capacity = 1.5
   9. Surcharges:

a. Dead Load:
    1) No Traffic or Pedestrian Traffic Above Wall = 0 lb/sf minimum
    2) Light Vehicular Traffic Above Wall (automobiles and lightweight trucks) = 100 lb/sf minimum
    3) Heavy Vehicular Traffic Above Wall (buses and tractor/trailer trucks) = 250 lb/sf minimum

10. Maximum Allowable Bearing Pressure: 1.5 ksf unless soils report indicates allowable bearing pressure is greater.
11. Provide engineering services as required for analysis for all modes of stability.
12. Use of design software for calculations is permitted.
13. Submit complete shop drawings showing all features of the design.

C. Setback: 3/4 inch back from face per course.

D. Mass (Weight) Per Wall Face Area: 35 pounds per square foot, minimum, including filled voids.

E. Shear Resistance: Design the wall not to exceed the capacity of materials and soils to resist shear:
1. Shear Resistance Between Units: Determine in accordance with ASTM D6916.
2. Connection Between Units and Soil Reinforcement: Determine in accordance with ASTM D6638. Strength shall exceed the maximum tensile force with a Factor of Safety of 1.5.
3. Coefficient for Direct Shear of Reinforcement on Soil: Determine in accordance with ASTM D5321/D5321M using soil similar in gradation and texture to that to be used for fill in the reinforced zone.

F. Soil Reinforcement:
1. Test reinforcement to be used in accordance with ASTM D6706 using soil taken from project site.
2. Do not use more than one type of reinforcement attached to units within the same wall; do not use products made by different manufacturers in the same wall; minimize the number of different reinforcement and filter products to avoid confusion in placement.
3. Walls Less Than 12 feet High: Use only one type of reinforcement of one grade and strength.
4. NCMA Method: Determine in accordance with NCMA TR-127:
5. Length Back from Wall: Not less than dimensions shown on drawings.
6. Long Term Design Strength of Reinforcement: LTDS = Tult / (RFd x RFid x RFcr), where:
    a. Tult = Ultimate (tensile) strength per ASTM D4595.
    b. RFd = Reduction Factor for chemical and biological durability; minimum 2.0 if durability testing has not been conducted, otherwise 1.1 for High-density polyethylene. (HDPE), and 1.1 for polyethylene terephthalate (PET).
    c. RFid = Reduction Factor for Installation Damage; minimum 1.1 and 3.0 if testing per ASTM D5818 has not been conducted.
    d. RFcr = Reduction Factor for Creep; consistent with test procedure used for determining the ultimate strength per ASTM D5262.
    e. The product RFd x RFid x RFcr shall be greater than 2.0.

G. Drainage: Design to prevent water accumulation in retained soil; use drainage fill and drainage pipe as specified in Section 334100; provide outlets at 50 foot intervals along length of wall, minimum.

H. Minimum Factor of Safety: Design with the following stability requirements:
1. Sliding = 1.5.
2. Pullout = 1.5.
3. Tensile Overstress = 1.5.
4. Overturning = 2.0.
5. Bearing Capacity = 2.0.

2.03 MATERIALS

A. Retaining Wall Units: Machine-formed concrete blocks of shapes and sizes suitable for the retaining wall configuration required and complying with ASTM C1372 and the following:
   1. Face Color: Natural cement gray; all units from same production run.
   2. Texture: Split face, on exposed surfaces.
   3. Face Shape: Straight (flat).
   4. Curved Walls: Provide unit shapes that accommodate the required curves without cutting and with gaps between faces of adjacent units of not more than 1/8 inch and a minimum radius of 3 1/2 feet.
   5. Acute Corners: Miter-cut corner units are acceptable; exposed faces finished to match.
   6. Batter Dimensional Control: Provide integral positive control to maintain consistent batter dimension.
   7. Shear Resistance Mechanism: Manufacturer's standard.
   8. Moisture Absorption: 8 percent, maximum.
   9. Dimensional Tolerances: Plus/minus 1/16 inch from specified dimension.
   10. Appearance: No visible chips, cracks, or other imperfections when viewed from 10 feet under diffuse lighting.

B. Drainage Filter: Geosynthetic textile.
   1. Apparent Opening Size: 70 to 100 U.S. Sieve size, when tested in accordance with ASTM D4751.
   2. Permittivity: 0.5 per second, minimum, when tested in accordance with ASTM D4491/D4491M.
   3. Durability: Comply with minimum requirements of AASHTO M 288 Class 1; minimum mass of 8 ounces per square yard.

C. Aggregate for Leveling Pad: Compacted sand, gravel, or crushed rock complying with the following:
   1. Type A1 as specified in Section 312323 - Fill.
   2. Do not use pea gravel.

D. Drainage Fill: Clean, freely draining aggregate placed within, between, or immediately behind segmental units; do not use pea gravel; use the following:
   1. Type A3 as specified in Section 312323 - Fill.

E. Reinforced Backfill: Compacted soil placed behind drainage fill within reinforced soil mass; do not use heavy clay or organic soils; comply with the following:
   1. As specified in Section 312323 - Fill.

F. Drainage Pipe: Perforated PVC, complying with ASTM D3034; or corrugated HDPE complying with ASTM ASTM F667/F667M; with geotextile filter wrap; 4 inch diameter.

PART 3 EXECUTION

3.01 EXAMINATION

A. Verify location of existing structures and utilities prior to excavation.

B. Protect adjacent structures from the effects of excavation.

C. Verify that layout dimensions are correct and substrate is in proper condition for installation.

D. Notify Architect of unsatisfactory conditions.

E. Do not proceed with installation until unsatisfactory conditions have been corrected.

3.02 PREPARATION

A. Sitework:

B. Excavation:
   1. Excavate to lines and grades indicated on drawings.

2. Do not disturb embankment or foundation beyond lines. Minimize over-excavation; fill over-excavated areas with compacted reinforced backfill or leveling pad material at Contractor's expense.
3. Excavation support, if required, shall be the responsibility of the Contractor.
4. After excavation, and prior to placement of leveling materials, Geotechnical Engineer will examine bearing soil surface to verify strength meets or exceeds design requirements and assumptions.
5. Replace unsuitable bearing soil as directed by Geotechnical Engineer in accordance with requirements of Section 312316 - Excavation.
6. Embankment excavations shall be bench cut as directed by the project Geotechnical Engineer.

C. Leveling Pad:
1. Depth: As indicated on drawings.
2. Width: 6 inches minimum extension beyond front and back faces of units.
3. Location: Top of pad at 1 inch below grade for each 8 inches that wall extends above grade.
4. Compact aggregate to lines and grades on drawings, in lifts 6 inches thick, maximum.
5. Compact aggregate to a minimum of 95 percent standard Proctor density, when determined in accordance with ASTM D698 at moisture content within 2 percent of optimum.
6. Use only hand-operated compaction equipment within 36 inches of back of wall.

D. Verify level grade before proceeding.

E. Install drainage collection pipe with a continuous fall in the direction of flow; cap open ends as necessary to prevent soil and debris from entering.

3.03 INSTALLATION

A. Install in accordance with drawings, manufacturer instructions, and applicable codes and regulations.

B. Segmental Retaining Wall Units:
1. Place first course of units on leveling pad; check alignment and level. Check for full contact with base and for stability.
2. Place units side by side for full length of wall, aligning back face of straight walls using string line or offset from base line and back face of curved walls using flexible pipe or other method recommended by manufacturer.
3. Do not leave gaps between units.
4. Lay out corners and curves in accordance with manufacturer's instructions. Do not leave gaps to produce wall batter or curvature.
5. Cut blocks with saw; do not split units.
6. Sweep excess material from tops of units before laying succeeding courses.
7. Place a maximum of 2 succeeding courses above level backfill. Check for proper alignment and batter.
8. Where top of wall changes elevation, step units to match grade or turn top course into embankment.
9. Where bottom of wall changes elevation, step base leveling pad and extend lowest course a minimum of two units into slope.
10. Install shear connectors per manufacturer recommendations.

C. Soil Reinforcement: Install each layer on fully compacted fill.
1. Orient soil reinforcement material with highest strength axis perpendicular to wall alignment.
2. Attach to top of wall units and extend horizontally, full length, over compacted backfill slightly sloping downward away from wall.

3. Install in one piece lengths with 100 percent coverage in each layer at each level. Do not splice or leave gaps between panels or ends of pieces.
4. Pull taut and remove slack prior to backfill placement.

D. Drainage Fill: Place drainage fill in, between, and behind units.
1. Compact to lines and grades on drawings, in lifts 6 inches thick, maximum; decrease lift thickness where necessary to achieve required density.
2. Extend drainage fill 12 inches beyond back face of units.
3. Base of drainage fill elevation shall not exceed two courses or 16 inches from base of wall units.

E. Drainage Pipe:
1. Install and join pipe and pipe fittings in accordance with pipe manufacturer's instructions.
2. Place drainage pipe on drainage fill at elevations detailed.
3. Lay pipe to slope gradients noted on Drawings; with maximum variation from true slope of 1/8 inch in 10 feet.
4. Place pipe with perforations facing down.
5. Install pipe couplings.
6. Install filter aggregate at sides, over joint covers and top of pipe.

F. Backfill: Place, spread, and compact backfill from behind drainage fill to undisturbed soil while minimizing the development of slack in the soil reinforcement.
1. Use only lightweight hand-operated compaction equipment within 3 feet from back wall face, or one half of wall height, whichever is greater.
2. Place backfill in lifts of maximum 6 inches to 8 inches loose thickness where hand compaction is used and 8 inches to 10 inches where heavy equipment compaction is used.
3. Compact backfill to 95 percent maximum density and upper 2 feet of backfill to 98 percent maximum density, standard Proctor, as determined in accordance with ASTM D698, or as recommended by Geotechnical Engineer.
4. Moisture content of backfill prior to and during compaction to be within plus or minus 2 percentage points dry of optimum and uniform throughout each layer.
5. Do not operate tracked construction equipment directly upon soil reinforcement. Maintain a minimum fill thickness of 6 inches for operation of tracked vehicles over soil reinforcement. Minimize turning of tracked vehicles while over soil reinforcement.
6. Operate wheeled equipment at speeds less than 10 miles per hour over soil reinforcement.
7. Prevent contamination of the filter fabric, unit fill, blanket drains, chimney drains, and/or drainage composite from poor drainage materials such as fine grained silt and clay.
8. At end of each day, slope top of backfill away from wall to direct runoff away from wall face. Prevent runoff from adjacent areas from entering wall site.
9. At completion, if other work adjacent to wall is not to be done immediately (paving, landscaping, etc), grade top of backfill and provide temporary drainage to prevent water runoff toward the wall.

G. Cap Units: Install with masonry adhesive.
1. Clear cap units and top course of segmental retaining wall units of debris and standing water before applying adhesive.
2. Apply masonry adhesive to top surface of top unit and place cap into position over projecting pins. Protect wall face from masonry adhesive.

H. Site Drainage:
1. At end of each day:
   a. Grade backfill a minimum of 2 percent away from wall to prevent runoff from adjacent areas from entering wall site and to prevent ponding at the wall.
   b. Construct a berm at the crest of the wall to prevent surface water from overtopping.

2. At completion, if other work adjacent to wall is not to be done immediately (paving, landscaping, etc), grade top of backfill and provide temporary drainage to prevent water runoff toward the wall.
3. Surface water control and groundwater seepage shall be the responsibility of the project Architect.

3.04 TOLERANCES

A. Top of Wall:
1. Plan Location: Maximum of plus/minus 1 inch from plan location.
2. Elevation: Maximum of plus/minus 1 inch from elevations shown on drawings.

B. Face of Wall Flatness: Measured as deviation from a straight edge.
1. In the Vertical Dimension: Plus/minus 1-1/4 inch per 10 foot section.
2. In the Horizontal Dimension of Straight Walls: Plus/minus 1-1/2 inch per 10 foot section.

C. Overall Wall Batter: Within 2 degrees of design, measured from the vertical.

D. Gap Between Adjacent Units: 1/8 inch, maximum.

3.05 FIELD QUALITY CONTROL

A. See Section 014000 - Quality Requirements, for additional requirements.

B. Provide manufacturer's field representative to observe and inspect concrete units.

C. Observe and inspect:
1. Concrete units: For correct type, for quality installation with courses that are level and follow the designed batter ratio.
2. Soil backfill: For correct type, for specified compaction with level grading prior to reinforcement installation.
3. Soil reinforcement: For correct type, for solid connection to concrete units, and for smooth and taut installation.
4. Field location in plan and elevation.

D. Soil Tests: For every new soil type and/or for every 2,000 cubic yard per running foot perform Atterberg Limit, Sieve Analysis, and Proctor Compaction tests. Perform additional testing per project Architect.

E. Owner will engage inspection and testing services, including independent laboratories, to provide quality assurance and testing services during construction. Contractor will secure necessary construction control testing during construction.

F. Frequency of Compaction Testing: 1 for each lift for each 100 ft of wall length.

G. Notify the Contractor of any deficiencies in the retaining wall construction and provide the Contractor a reasonable opportunity to correct the deficiency.
1. Notify the Contractor, Owner and Retaining Wall Design Engineer of any construction deficiencies that have not been corrected timely.

H. Contractor shall correct work found deficient and not in accordance with drawings and specifications.

3.06 CLEANING

A. Clean wall face to remove debris and stains.

B. Leave adjacent paved areas broom clean.

3.07 PROTECTION

A. Prevent damage to wall and earthwork by subsequent construction and uncontrolled runoff until substantial completion; repair damage due to failure to protect wall or earthwork.

B. Do not operate heavy paving or grading equipment within 36 inches from the back of the wall face.

C. Do not operate equipment with wheel loads in excess of 150 pounds per square foot live load within 10 feet from the wall face.

D. Do not place temporary soil or fill stockpiles adjacent to wall.

E. Replace damaged units prior to Date of Substantial Completion.

END OF SECTION 323223

SECTION 329223
SODDING

PART 1 GENERAL

1.01 SECTION INCLUDES

A. Preparation of subsoil.

B. Placing topsoil.

C. Fertilizing.

D. Sod installation.

E. Maintenance.

1.02 RELATED REQUIREMENTS

A. Section 312200 - Grading: Topsoil material.

B. Section 312200 - Grading: Preparation of subsoil and placement of topsoil in preparation for the work of this section.

1.03 DEFINITIONS

A. Weeds: Includes Dandelion, Jimsonweed, Quackgrass, Horsetail, Morning Glory, Rush Grass, Mustard, Lambsquarter, Chickweed, Cress, Crabgrass, Canadian Thistle, Nutgrass, Poison Oak, Blackberry, Tansy Ragwort, Bermuda Grass, Johnson Grass, Poison Ivy, Nut Sedge, Nimble Will, Bindweed, Bent Grass, Wild Garlic, Perennial Sorrel, and Brome Grass.

1.04 REFERENCE STANDARDS

A. TPI (SPEC) - Guideline Specifications to Turfgrass Sodding.

1.05 SUBMITTALS

A. See Section 013000 - Administrative Requirements, for submittal procedures.

B. Certificate: Certify grass species and location of sod source.

1.06 QUALITY ASSURANCE

A. Sod Producer: Company specializing in sod production and harvesting with minimum five years experience in hardiness zone 5 through 7.

1.07 REGULATORY REQUIREMENTS

A. Comply with regulatory agencies for fertilizer and herbicide composition.

1.08 DELIVERY, STORAGE, AND HANDLING

A. Deliver sod in rolls. Protect exposed roots from dehydration.

B. Do not deliver more sod than can be laid within 24 hours.

PART 2 PRODUCTS

2.01 MATERIALS

A. Sod: TPI (SPEC), Certified Turfgrass Sod quality; cultivated grass sod; type indicated below; with strong fibrous root system, free of stones, burned or bare spots; containing no more than 5 weeds per 1000 sq ft. Minimum age of 18 months, with root development that will support its own weight without tearing, when suspended vertically by holding the upper two corners.
   1. Tall Fescue Grass Type: 100 percent.
   2. Thickness: "Thin" sod, minimum 1/2 inch and maximum 1 inch topsoil base.
   3. Cut sod in area not exceeding 1 sq yd.
   4. Machine cut sod and load on pallets in accordance with TPI (SPEC) Guidelines.

B. Topsoil: Type S2 as specified in Section 312200 - Grading.

C. Fertilizer: recommended for grass, with fifty percent of the elements derived from organic sources; of proportion necessary to eliminate any deficiencies of topsoil, to the following proportions:
   1. Nitrogen: 12 percent.
   2. Phosphoric Acid: 12 percent.
   3. Soluble Potash: 12 percent.

D. Water: Clean, fresh and free of substances or matter that could inhibit vigorous growth of grass.

2.02 ACCESSORIES

A. Wood Pegs: Softwood, sufficient size and length to ensure anchorage of sod on slope.

PART 3 EXECUTION

3.01 EXAMINATION

A. Verify that prepared soil base is ready to receive the work of this section.

3.02 PREPARATION

A. Prepare subgrade in accordance with Section 312200 - Grading.

B. Place topsoil in accordance with Section 312200 - Grading.

3.03 FERTILIZING

A. Apply fertilizer at a rate of 2.5 lbs per 1 000 sf.

B. Apply after smooth raking of topsoil and prior to installation of sod.

C. Apply fertilizer no more than 48 hours before laying sod.

D. Lightly water to aid the dissipation of fertilizer.

3.04 LAYING SOD

A. Planting Season: March 15 through October 15.
   1. Sodding must be completed within planting season.

B. Moisten prepared surface immediately prior to laying sod.

C. Lay sod within 24 hours after harvesting to prevent deterioration.

D. Lay sod smooth and tight with no open joints visible, and no overlapping; stagger end joints 12 inches minimum. Do not stretch or overlap sod pieces.

E. Where new sod adjoins existing grass areas, align top surfaces.

F. Where sod is placed adjacent to hard surfaces, such as curbs, pavements, etc., place top elevation of sod 1/2 inch below top of hard surface.

G. On slopes 4 inches per foot and steeper, lay sod perpendicular to slope and secure every row with wooden pegs at maximum 2 feet on center. Drive pegs flush with soil portion of sod.

H. Water sodded areas immediately after installation. Saturate sod to 4 inches of soil.

I. After sod and soil have dried, roll sodded areas to ensure good bond between sod and soil and to remove minor depressions and irregularities.

3.05 MAINTENANCE

A. Provide maintenance at no extra cost to Owner; Owner will pay for water used from existing water system on site.

B. Provide maintenance of sodded areas for two months from date of sod installation or until sod has taken root. Notify Owner one-week prior to end of watering period.

C. Mow grass at regular intervals to maintain at a maximum height of 2-1/2 inches. Do not cut more than 1/3 of grass blade at any one mowing.

D. Neatly trim edges and hand clip where necessary.

E. Immediately remove clippings after mowing and trimming.

F. Water to prevent grass and soil from drying out.

G. Roll surface to remove irregularities.

H. Control growth of weeds. Apply herbicides in accordance with manufacturer's instructions. Remedy damage resulting from improper use of herbicides.

I. Immediately replace sod to areas that show deterioration or bare spots.

J. If Contractor chooses to delay planting due to weather conditions, Contractor assumes responsibility for erosion control and repair to landscape grading per requirements of Section 312200 - Grading.

END OF SECTION 329223

SECTION 334100
SUBDRAINAGE

PART 1 GENERAL

1.01 SECTION INCLUDES

A. Site Subdrainage and Under Playground Fall Areas Drainage Systems.

B. Filter aggregate and fabric and bedding.

1.02 RELATED REQUIREMENTS

A. Section 312316.13 - Trenching: Excavating and backfilling for site subdrainage and under playground fall areas subdrainage systems.

1.03 REFERENCE STANDARDS

A. ASTM D2729 - Standard Specification for Poly(Vinyl Chloride) (PVC) Sewer Pipe and Fittings.

1.04 SUBMITTALS

A. See Section 013000 - Administrative Requirements, for submittal procedures.

B. Product Data: Provide data on pipe drainage products, pipe accessories.

C. Project Record Documents: Record location of pipe runs, connections, cleanouts and principal invert elevations.

1.05 REGULATORY REQUIREMENTS

A. Conform to applicable code for materials and installation of the work of this section.

PART 2 PRODUCTS

2.01 PIPE MATERIALS

A. Polyvinyl Chloride Pipe: ASTM D2729; plain end, inside diameter as specified on plans; with required fittings.

B. Use perforated pipe at subdrainage system; unperforated through sleeved walls.

2.02 AGGREGATE AND BEDDING

A. Filter Aggregate and Bedding Material: Fill Type A3 as specified in Section 312316.13 - Trenching.

B. Filter Aggregate and Bedding Material: Fill Type A3 as specified in Section 312323 - Fill.

2.03 CLEANOUT

A. Manufacturers:
   1. Jay R. Smith Mfg. Co.; Product 4261L: www.jrsmith.com
   2. Substitutions: Section 01600 Product Requirements.

B. Cleanout Box: Cast iron construction, round, dual flanged, secured lid:
   1. Lid Design: Scoriated with lifting device and "C.O." cast into lid.
   2. Nominal Lid and Frame Size: 8-3/4 inches diameter.

C. Cleanout Cover: Gasketed with ABS plug.
   1. Cleanout cover comes with cleanout box.

2.04 ACCESSORIES

A. Pipe Couplings: Solid plastic.

B. Geotextile Drainage Fabric: Non-biodegradable, non-woven; Mirafi-140N manufactured by TenCate. www.tencate.com

PART 3 EXECUTION

3.01 EXAMINATION

A. Verify that trench cut is ready to receive work and excavations, dimensions, and elevations are as indicated on Drawings.

3.02 PREPARATION

A. Hand trim excavations to required elevations. Correct over-excavation with compacted aggregate.

B. Remove large stones or other hard matter that could damage drainage piping or impede consistent backfilling or compaction.

3.03 INSTALLATION

A. Install and join pipe and pipe fittings in accordance with pipe manufacturer's instructions.

B. Place drainage pipe on clean cut subsoil.

C. Lay pipe to slope gradients noted on Drawings; with maximum variation from true slope of 1/8 inch in 10 feet.

D. Place pipe with perforations facing down.

E. Install pipe couplings.

F. Install filter aggregate at sides, over joint covers and top of pipe. Provide top cover compacted thickness of 12 inches.

G. Place filter fabric over levelled top surface of aggregate cover prior to subsequent backfilling operations.

H. Place aggregate in maximum 6 inch lifts, consolidating each lift.

I. Refer to Section 312323 - Fill for compaction requirements. Do not displace or damage pipe when compacting.

J. Place impervious fill over drainage pipe aggregate cover and compact.

K. Connect to storm sewer system with unperforated pipe .

L. Coordinate the Work with connection to Metropolitan St. Louis Sewer District system and trenching through public rights-of-way or easements.

3.04 FIELD QUALITY CONTROL

A. Section 014000 - Quality Requirements: Field inspection and testing.

B. Request inspection prior to and immediately after placing aggregate cover over pipe.

3.05 PROTECTION

A. Protect pipe and aggregate cover from damage or displacement until backfilling operation begins.

END OF SECTION 334100

SECTION 334211
STORMWATER GRAVITY PIPING

PART 1 GENERAL

1.01 SECTION INCLUDES

A. Stormwater drainage piping.

B. Stormwater pipe accessories.

1.02 RELATED REQUIREMENTS

A. Section 312316.13 - Trenching: Excavating, bedding, and backfilling.

B. Section 334230 - Stormwater Drains.

1.03 REFERENCE STANDARDS

A. ASTM D2321 - Standard Practice for Underground Installation of Thermoplastic Pipe for Sewers and Other Gravity-Flow Applications.

B. ASTM D2729 - Standard Specification for Poly(Vinyl Chloride) (PVC) Sewer Pipe and Fittings.

C. ASTM D3034 - Standard Specification for Type PSM Poly(Vinyl Chloride) (PVC) Sewer Pipe and Fittings.

1.04 ADMINISTRATIVE REQUIREMENTS

A. Coordination: Coordinate the installation of stormwater gravity piping with size, location and installation of stormwater drains according to Section 334230.

B. Sequencing: Ensure that utility connections are achieved in an orderly and expeditious manner.

1.05 SUBMITTALS

A. See Section 013000 - Administrative Requirements, for submittal procedures.

B. Product Data: Provide data indicating pipe, pipe accessories.

C. Field Quality Control Submittals: Document results of field quality control testing.

D. Project Record Documents:

1. Identify and describe unexpected variations to subsoil conditions or discovery of uncharted utilities.

1.06 REGULATORY REQUIREMENTS

PART 2 PRODUCTS

2.01 STORMWATER PIPE MATERIALS

A. Provide products that comply with Metropolitan St. Louis Sewer District standards.

B. Plastic Pipe: ASTM D3034, SDR 35, Type PSM, Poly Vinyl Chloride (PVC) material; inside nominal diameter as indicated on drawings, bell and spigot style solvent sealed joint end.

2.02 PIPE ACCESSORIES

A. Fittings: Same material as pipe molded or formed to suit pipe size and end design, in required tee, bends, elbows, cleanouts, reducers, traps and other configurations required.

B. Substitutions: See Section 01 6000 - Product requirements.

2.03 BEDDING AND COVER MATERIALS

A. Bedding: As specified in Section 312316.13 - Trenching.

B. Cover: As specified in Section 312316.13 - Trenching.

PART 3 EXECUTION

3.01 TRENCHING

A. See Section 312316.13 - Trenching for additional requirements.

B. Hand trim excavation for accurate placement of pipe to elevations indicated.

C. Backfill around sides and to top of pipe with bedding Fill Type A5 or A6 as appropriate for pipe size, tamp in place and compact, then complete backfilling.

3.02 INSTALLATION

A. Verify that trench cut is ready to receive work and excavations, dimensions, and elevations are as indicated on drawings.

B. Install pipe, fittings, and accessories in accordance with manufacturer's instructions. Seal watertight.
   1. Plastic Pipe: Also comply with ASTM D2321.

C. Lay pipe to slope gradients noted on layout drawings; with maximum variation from true slope of 1/8 inch in 10 feet.

D. Coordinate the Work with connection to Metropolitan St. Louis Sewer District system and trenching through public rights-of-way or easements.

3.03 FIELD QUALITY CONTROL

A. Perform field inspection and testing in accordance with Section 014000 - Quality Requirements.

B. If tests indicate Work does not meet specified requirements, remove Work, replace and retest at no cost to Owner.
   1. Infiltration Test: Test in accordance with Metropolitan St. Louis Sewer District standards.
   2. Deflection Test: Test in accordance with Metropolitan St. Louis Sewer District standards.

3.04 PROTECTION

A. Protect pipe and bedding cover from damage or displacement until backfilling operation is in progress.

END OF SECTION 334211

SECTION 334230
STORMWATER DRAINS

PART 1 GENERAL

1.01 SECTION INCLUDES

A. Prefabricated drop inlets.

B. Prefabricated trench drains.

C. Frames and grates.

1.02 RELATED REQUIREMENTS

A. Section 312316 - Excavation.

B. Section 312323 - Fill.

C. Section 334211 - Stormwater Gravity Piping.

1.03 REFERENCE STANDARDS

A. AASHTO HB - Standard Specifications for Highway Bridges.

B. ASTM C1634 - Standard Specification for Dry-Cast Concrete Facing Brick and Other Concrete Masonry Facing Units.

1.04 SUBMITTALS

A. See Section 013000 - Administrative Requirements for submittal procedures.

B. Product Data: Weight rating for catch basins, drop inlets, trench drains, and frame and grates.

C. Shop Drawings: Indicate stack assembly, invert elevations, opening sizes, and pipe angles.

D. Manufacturer's Installation Instructions: Indicate special procedures for assembly.

E. Project Record Documents:
   1. Record invert elevations of catch basins, drop inlets, and trench drains.
   2. Identify and describe unexpected variations to subsoil conditions or discovery of uncharted utilities.

PART 2 PRODUCTS

2.01 CATCH BASINS

A. Weight Rating: As specified on the plans.

B. Grade Adjustments:
   1. Concrete Bricks: ASTM C1634 or ASTM C55 Grade N, cored, normal weight; 4 by 8 by 3 inches.

C. Frames and Grates: As specified on plans.

2.02 DROP INLETS

A. Weight Rating: As specified on plans.

B. Prefabricated Drop Inlet: As specified on the plans.

C. Frames and Grates: As specified on the plans.

2.03 PREFABRICATED TRENCH DRAINS

A. Prefabricated Trench Drain: As specified on the plans.
   1. Weight Rating: As specified on the plans.
   2. Frames and Grates: As specified on the plans.

PART 3 EXECUTION

3.01 EXAMINATION

A. Verify items provided by other sections of work are properly sized and located.

B. Verify built-in items are in proper location and ready for roughing into work.

C. Verify excavation location and depth are correct.

3.02 EXCAVATION AND FILL

A. Hand trim excavation for accurate placement to indicated elevations.

B. Backfill with cover fill, tamp in place and compact, then complete backfilling.

3.03 INSTALLATION

A. Establish elevations and pipe inverts for inlets and outlets as indicated in drawings.

B. Prefabricated Drop Inlets, Trench Drains, or Slot Drains:
   1. Place base section plumb and level.
   2. Install according to manufacturer's instructions.
   3. Secure installation brackets.

C. Grade Adjustments:
   1. Lay brick or masonry units uniformly on mortar bed with full head joints, running bond. Top with mortar, plumb and level.
   2. Place adjacent materials tight and smooth following design grades.

D. Frames and Grates:
   1. Place frame plumb and level.
   2. Mount frame on prefabricated drop inlets or trench drains according to manufacturer's instructions.
   3. Place grate in frame securely.

END OF SECTION 334230