Poettker Construction

PARKWAY SCHOOL DISTRICT

WEST HIGH SCHOOL

BUILDING RENOVATION, SITE IMPROVEMENTS AND ABATEMENT

VOLUME TWO: TECHNICAL

ISSUE FOR PERMIT/BID
PROJECT MANUAL
05 NOVEMBER 2026

PARKWAY SCHOOLS

BID NUMBER: 27-60

Owner's Project Number: PN542501B
Architect's Project Number: 26022

bond architects

Bond Architects, Inc.
222 South Central Avenue, Suite 501
St. Louis, MO 63105
314.863.4994
c-314-574-2193

SECTION 024100
DEMOLITION

PART 1 GENERAL

1.01 SECTION INCLUDES

A. Selective demolition of built site elements.

B. Selective demolition of building elements for alteration purposes excluding removal of hazardous materials and toxic substances.

1.02 RELATED REQUIREMENTS

A. Section 003100 - Available Project Information: Existing building survey conducted by Owner; information about known hazardous materials.

B. Section 011010 - Project Summary - Bid Packages : Limitations on Contractor's use of site and premises.

C. Section 011010 - Project Summary - Bid Packages : Sequencing and staging requirements.

D. Section 011010 - Project Summary - Bid Packages : Description of items to be removed by Owner.

E. Section 011010 - Project Summary - Bid Packages : Description of items to be salvaged or removed for re-use by Contractor.

F. Section 015000 - Temporary Facilities and Controls: Site fences, security, protective barriers, and waste removal.

G. Section 015713 - Temporary Erosion and Sediment Control.

H. Section 016000 - Product Requirements: Handling and storage of items removed for salvage and relocation.

I. Section 017000 - Execution and Closeout Requirements: Project conditions; protection of bench marks, survey control points, and existing construction to remain; reinstallation of removed products; temporary bracing and shoring.

J. Section 017419 - Construction Waste Management and Disposal: Limitations on disposal of removed materials; requirements for recycling.

K. Section 028400 - Polychlorinated Biphenyls (PCB) Remediation: Removal of equipment containing substances regulated under the Federal Toxic Substances Control Act (TSCA), including but not limited to PCB- and mercury-containing equipment.

L. Section 312323 - Fill: Filling holes, pits, and excavations generated as a result of removal operations.

1.03 REFERENCE STANDARDS

A. 29 CFR 1926 - Safety and Health Regulations for Construction.

B. NFPA 241 - Standard for Safeguarding Construction, Alteration, and Demolition Operations.

PART 2 PRODUCTS -- NOT USED

PART 3 EXECUTION

3.01 GENERAL PROCEDURES AND PROJECT CONDITIONS

A. Comply with requirements in Section 017000.

B. Comply with applicable codes and regulations for demolition operations and safety of adjacent structures and the public.
   1. Obtain required permits.
   2. Use of explosives is not permitted.
   3. Take precautions to prevent catastrophic or uncontrolled collapse of structures to be removed; do not allow worker or public access within range of potential collapse of unstable structures.

4. Provide, erect, and maintain temporary barriers and security devices.
5. Use physical barriers to prevent access to areas that could be hazardous to workers or the public.
6. Conduct operations to minimize effects on and interference with adjacent structures and occupants.
7. Do not close or obstruct roadways or sidewalks without permits from authority having jurisdiction.
8. Conduct operations to minimize obstruction of public and private entrances and exits. Do not obstruct required exits at any time. Protect persons using entrances and exits from removal operations.
9. Obtain written permission from owners of adjacent properties when demolition equipment will traverse, infringe upon, or limit access to their property.

C. Do not begin removal until receipt of notification to proceed from Owner.

D. Do not begin removal until built elements to be salvaged or relocated have been removed.

E. Do not begin removal until vegetation to be relocated has been removed and vegetation to remain has been protected from damage.

F. Protect existing structures and other elements to remain in place and not removed.
1. Provide bracing and shoring.
2. Prevent movement or settlement of adjacent structures.
3. Stop work immediately if adjacent structures appear to be in danger.

G. Minimize production of dust due to demolition operations. Do not use water if that will result in ice, flooding, sedimentation of public waterways or storm sewers, or other pollution.

H. Provide and maintain daily the effectiveness of dust control walls and required asset protection.

I. Perform demolition in a manner that maximizes salvage and recycling of materials.
1. Comply with requirements of Section 017419 - Construction Waste Management and Disposal.
2. Dismantle existing construction and separate materials.
3. Set aside reusable, recyclable, and salvageable materials; store and deliver to collection point or point of reuse.

J. Partial Removal of Paving and Curbs: Neatly saw cut at right angle to surface.

3.02 EXISTING UTILITIES

A. Coordinate work with utility companies. Notify utilities before starting work, comply with their requirements, and obtain required permits.

B. Protect existing utilities to remain from damage.

C. Do not disrupt public utilities without permit from authority having jurisdiction.

D. Do not close, shut off, or disrupt existing life safety systems that are in use without at least 7 days prior written notification to Owner.

E. Do not close, shut off, or disrupt existing utility branches or take-offs that are in use without at least 3 days prior written notification to Owner.

F. Locate and mark utilities to remain; mark using highly visible tags or flags, with identification of utility type; protect from damage due to subsequent construction, using substantial barricades if necessary.

G. Unused underground piping may be abandoned in place provided it is completely drained and capped unless otherwise indicated; remove exposed piping, valves, meters, equipment, supports, and foundations of disconnected and abandoned utilities.

3.03 SELECTIVE DEMOLITION FOR ALTERATIONS

A. Existing construction and utilities indicated on drawings are based on casual field observation and existing record documents only.

1. Verify construction and utility arrangements are as indicated.
2. Report discrepancies to Architect before disturbing existing installation.
3. Record discrepancies encountered daily on record drawings.
4. Beginning of demolition work constitutes acceptance of existing conditions that would be apparent upon examination prior to starting demolition.

B. Separate areas in which demolition is being conducted from areas that remain occupied.
1. Provide, erect, and maintain temporary dustproof partitions of construction specified in Section 015000 in locations indicated on drawings.

C. Maintain weatherproof exterior building enclosure, except for interruptions required for replacement or modifications; prevent water and humidity damage.

D. Remove existing work as indicated and required to accomplish new work.
1. Remove rotted wood, corroded metals, and deteriorated masonry and concrete; replace with new construction indicated.
2. Remove items indicated on drawings.

E. Services including, but not limited to, HVAC, Plumbing, Fire Protection, Electrical, and Telecommunications: Remove existing systems and equipment as indicated.
1. Maintain existing active systems to remain in operation, and maintain access to equipment and operational components.
2. Where existing active systems serve occupied facilities but are to be replaced with new services, maintain existing systems in service until new systems are complete and ready for service.
3. See Section 011000 - Summary for limitations on outages and required notifications.
4. Verify that abandoned services serve only abandoned facilities before removal.
5. Remove abandoned pipe, ducts, conduits, and equipment, including those above accessible ceilings. Remove back to source of supply where possible, otherwise cap stub and tag with identification.

F. Protect existing work to remain.
1. Prevent movement of structure. Provide shoring and bracing as required.
2. Perform cutting to accomplish removal work neatly and as specified for cutting new work.
3. Repair adjacent construction and finishes damaged during removal work.
4. Patch to match new work.

G. Protect items to be salvaged by the Owner or reused in the Work by the Contractor.

3.04 DEBRIS AND WASTE REMOVAL

A. Remove debris, junk, and trash from site daily as it accumulates. Do not use the Owner's dumpsters.

B. Remove materials not to be reused on site; comply with requirements of Section 017419 - Waste Management.

C. Leave site in clean condition, ready for subsequent work.

D. Clean up spillage and wind-blown debris from public and private lands.

END OF SECTION

This page intentionally left blank

SECTION 028213
REMOVAL OF ASBESTOS CONTAINING MATERIALS

PART 1 GENERAL

1.01 RELATED WORK SPECIFIED ELSEWHERE

A. Installation of Critical and Primary Barriers, and Work Area Isolation Procedures are set forth in Section 015643 Temporary Enclosures.

B. Project Decontamination procedures after removal of the Secondary Barrier are specified in Section 017333 Project Decontamination.

C. Disposal of asbestos-containing waste is specified in Section 028233 Disposal of Asbestos Containing Waste Material.

1.02 SUBMITTALS

A. Before the Start of Work: Submit the following to the Owner for review. No work shall begin until these submittals provided:

1. Surfactant: Submit product data, use instructions and recommendations from manufacturer of surfactant intended for use. Include data substantiating that material complies with requirements.
2. Material Safety Data Sheet: Submit the Material Safety Data Sheet, or equivalent, in accordance with the OSHA Hazard Communication Standard (29 CFR 1910.1200) for each surfactant, encapsulating material and solvent proposed for use on the work. Include a separate attachment for each sheet indicating the specific worker protective equipment proposed for use with the material indicated.
3. Glovebags: Submit product data.
4. Mini-Enclosures: Submit sketch of mini-enclosure arrangement to be used.

PART 2 PRODUCTS

2.01 WETTING MATERIALS

A. For wetting prior to disturbance of Asbestos-Containing Materials use amended water:

1. Amended Water: Provide water to which a surfactant has been added. Use a mixture of surfactant and water which results in wetting of the Asbestos-Containing Material and retardation of fiber release during disturbance of the material equal to or greater than that provided by the use of one ounce of a surfactant consisting of 50% polyoxyethylene ester and 50% polyoxyethylene ether mixed with five gallons of water.

2.02 POLYETHYLENE SHEET

A. Polyethylene Sheet: A single polyethylene film in the largest sheet size practicable to minimize seams, 6.0 mil (0.15 mm) thick clear, frosted, or black as indicated.

B. Provide flame resistant polyethylene film that conforms to requirements set forth by the National Fire Protection Association Standard 701, Small Scale Fire Test for Flame-resistant Textiles and Films.

2.03 DUCT TAPE

A. Provide duct tape in 2" or 3" widths as indicated, with an adhesive which is formulated to stick aggressively to sheet polyethylene.

2.04 SPRAY CEMENT

A. Provide spray adhesive in aerosol cans which is specifically formulated to stick tenaciously to sheet polyethylene.

2.05 DISPOSAL BAGS

A. Provide 6 mil thick leak-tight polyethylene bags labeled as required by Section 028233 Disposal of Asbestos Containing Waste Material.

2.06 FIBERBOARD DRUMS

A. Provide heavy duty leak tight fiberboard drums with tight sealing locking metal tops.

2.07 PAPER BOARD BOXES

A. Provide heavy duty corrugated paper board boxes coated with plastic or wax to retard deterioration from moisture.

B. Provide in sizes that will easily fit in disposal bags.

2.08 FELT

A. Standard felt approximately 1/16" thick and 36" to 72" in width.

PART 3 EXECUTION

3.01 WORKER PROTECTION

A. Before beginning work with any material for which a Safety Data Sheet has been submitted provide workers with the required protective equipment.

B. Require that appropriate protective equipment be used at all times.

3.02 WET REMOVAL

A. Thoroughly wet to satisfaction of Owner, Asbestos-Containing Materials to be removed prior to stripping and/or tooling to reduce fiber dispersal into the air. Accomplish wetting by a fine spray (mist) of amended water. Saturate material sufficiently to wet to the substrate without causing excess dripping. Allow time for amended water to penetrate material thoroughly. Spray material repeatedly during the work process to maintain a continuously wet condition. Perforate outer covering of any installation which has been painted and/or jacketed in order to allow penetration of amended water or use injection equipment to wet material under the covering. Where necessary, carefully strip away while simultaneously spraying amended water on the installation to minimize dispersal of asbestos fibers into the air.

B. Mist work area continuously with amended water whenever necessary to reduce airborne fiber levels.

C. Remove saturated Asbestos-Containing Material in small sections from all areas. Do not allow material to dry out. As it is removed, simultaneously pack material while still wet into disposal bags. Evacuate air from disposal bags with a HEPA filtered vacuum cleaner before sealing. Twist neck of bags, bend over and seal with minimum three wraps of duct tape. Clean outside and move to Wash Down Station adjacent to Material Decontamination Unit.

D. Removal requirements for specific materials: Floor tile and mastic, Full containment

3.03 MINI-ENCLOSURES

A. A Mini-Enclosure consists of a small Work Room with an attached separate Change Room. Worker decontamination requires a remote personnel decontamination unit.

B. Complete requirement of the following:
   1. Section 015733 Worker Protection
   2. Section 015736 Respiratory Protection

C. Sequence of Work: Before beginning work of this sub-section complete the following:
   1. Comply with all applicable OSHA Class l removal procedures, including supervision by a competent person as defined by the regulation, wet removal methods, and use of HEPA filtered vacuums.
   2. Construct a personnel decontamination unit in accordance with Section 015726 Decontamination Units.
   3. Cordon off the work zone within which the mini-enclosure will be installed with barrier tape and post signs at all entrances.
   4. Shut down HVAC system to the general area in which the mini-enclosure will be constructed or otherwise minimize air flow within the area.

D. Work Room: Utilize a prefabricated or construct Work Room in the same manner as a Primary Barrier fabricated from 6 mil sheet plastic. Line walls and floor of the Work Room with a continuous Secondary Barrier.

E. Change Room: Provide an approximately 3'-0" by 3' -0" Change Room attached to Work Room. Fabricate Change Room from 6 mil sheet plastic in the same manner as a Primary Barrier. Locate so that access to Work Area is though Change Room.

F. Step Off Area: Cover floor in front of entry to Change Room with one layer of 6 mil sheet plastic. Securely anchor sheet plastic to prevent slipping.

G. Flapped Door Construction: Provide flapped door as entry to Change Room and entry from Change Room to Work Room. Fabricate each flapped door from overlapping contacting layers of sheet plastic. Fasten each layer on the top and one side. Reinforce free side and bottom of each sheet with duct tape. Alternate sides that are fastened on each layer. Form arrows pointing to entry side from duct tape on inside and outside of door.

H. Signage: At entry to Change Room post an approximately 20 inch by 14 inch manufactured caution sign displaying the following legend with letter sizes and styles of a visibility required by 29 CFR 1926.1101:

I. Entry to Work Room: Require that any time a worker enters the Work Room the following procedure is followed:
   1. Outside of Change Room remove all street clothes and don clean coveralls and respirator. A swim suit or second disposable suite may be worn beneath outer coveralls.
   2. Enter Change Room by sure that entry is completely closed.
   3. Enter Work Room be sure the entry is completely closed.

J. Worker Decontamination: Require that any time a worker leaves the mini-enclosure the following procedure be followed:
   1. Maintain a bucket of clean potable water in the Change Room. Do not amend with a wetting agent.
   2. Do not allow debris in work area to dry or accumulate. HEPA vacuum debris from floor prior to beginning exit procedures.
   3. HEPA vacuum gross debris from disposable suit and foot coverings inside the Work Area. Leave respirator in place.
   4. Proceed with respirator in place to Change Room.
   5. Be sure the entry to Work area is completely closed.
   6. Wash hands, face and surface of respirator with water and wet paper towels. Use caution to avoid breaking seal between respirator face-piece and face.
   7. In Change Room don clean disposable suit leaving respirator in place.
   8. Exit change room, be sure the entry to Change Room is completely closed. Proceed to next Mini-Enclosure, or a remote shower.
   9. At end of work day decontaminate fully in accordance with procedures in section "Worker Protection".

K. Material Decontamination: Require that the following procedure be used in removing equipment and bagged debris from the Work Room:
   1. Worker in Work Room cleans equipment and bagged debris and hands one piece of equipment of one bag of debris at a time to worker in Change Room.
   2. Worker in Change Room wet cleans each piece of equipment or bag. Equipment is sealed completely in 6 mil sheet plastic or bags in the Change Room and passed through the flapped door to the Step Off Area. Bagged waste is placed in a second clean disposal bag and passed to the Step Off Area. Ensure that only one of the two flapped doorways is open at any given time.
   3. Each bag is immediately placed in a sellable cart for transport to the load out area. No bags are to be stored outside of the Mini-Enclosure.
   4. All bag are to be transported through the building in clean sealed containers that have never been in an asbestos Work Area, Mini-Enclosure of decontamination unit.

L. Mini-Enclosure Decontamination: At completion of all Work decontaminate the Work and Changing Rooms as set forth in Section 017333 Project Decontamination.

END OF SECTION 028213

SECTION 028233
DISPOSAL OF ASBESTOS CONTAINING WASTE MATERIALS

PART 1 GENERAL

1.01 RELATED DOCUMENTS

A. Section 014113 Asbestos Abatement Codes, Regulations and Standards - Asbestos Abatement describes applicable federal, state and local regulations.

1.02 DESCRIPTION OF THE WORK

A. This section describes the disposal of Asbestos-Containing Materials. Disposal includes packaging of asbestos-containing waste materials. Disposal may be accomplished either by land filling or converting asbestos containing materials to non-asbestos waste.

1.03 SUBMITTALS

A. Before Start of Work: Submit the following to the Owner for review. Do not start work until these submittals are returned with Owner's approval indicating that the submittal is returned for unrestricted use.
   1. Copy of state or local license for waste hauler.
   2. Name and address of landfill where asbestos-containing waste materials are to be buried. Include contact person and telephone number.

B. Submit copies of all manifests and disposal site receipts to Owner prior to project close-out.

PART 2 PRODUCTS

2.01 DISPOSAL BAGS

2.02 FIRST LABEL:

A. Provide in accordance with 29 CFR 1910.1200(f) of OSHA's Hazard Communication standard with NESHAP additions:

DANGER
CONTAINS ASBESTOS FIBERS
MAY CAUSE CANCER
CAUSES DAMAGE TO LUNGS
AVOID CREATING DUST

2.03 SECOND LABEL:

A. Provide in accordance with U. S. Department of Transportation regulation on hazardous waste marking. 49 CFR parts 171 and 172. Hazardous Substances: Final Rule. Published November 21, 1986 and revised October 21, 1991:

RQ ASBESTOS
NA 2212, III

2.04 THIRD LABEL:

A. Affix to asbestos waste containers a label in accordance with National Emission Standard for Hazardous Air Pollutants (NESHAP) 40 CFR Part 61, Subpart M, Section 61.150(a)(1)(v), published November 20, 1990, that includes owners name, address of where asbestos waste was generated, and the name and address of asbestos abatement contractor.

PART 3 EXECUTION

3.01 COMPLY WITH THE FOLLOWING SECTIONS DURING ALL PHASES OF THIS WORK:

A. Section 015733 Worker Protection - Asbestos Abatement

B. Section 015736 Respiratory Protection

3.02 GENERAL

A. All waste is to be hauled by a waste hauler with all required licenses from all state and local authority with jurisdiction.

B. Seal asbestos waste in leak-proof impermeable containers labeled in accordance with Title 29, Code of Federal Regulations, Section 1910.1200 (f).

C. Protect interior of truck or dumpster with Critical and Primary Barriers as described in Section 015643 Temporary Enclosures.

D. Carefully load containerized waste in fully enclosed dumpsters, trucks or other appropriate vehicles for transport. Exercise care before and during transport, to insure that no unauthorized persons have access to the material. Vehicle must be placarded with DOT label.

E. Take containers from the Work Area directly to a sealed truck or dumpster.

F. Do not transport disposal bagged materials on open trucks. Double bagged material may be transported on open trucks if they are first loaded in sealed drums. Label drums with same warning labels as bags. Uncontaminated drums may be reused. Treat drums that have been contaminated as asbestos-containing waste and dispose of in accordance with this specification.

G. Advise the landfill operator or processor, in advance of transport, of the quantity of material to be delivered.

H. At disposal site unload containerized waste:
   1. At a disposal site, sealed plastic bags may be carefully unloaded from the truck. If bags are broken or damaged, return to work site for rebagging. Clean entire truck and contents which have been in contact with containerized waste, using procedures set forth in Section 017333 Project Decontamination.
   2. Ensure that no visible emissions are released to the outside air from sealed plastic bags or impermeable containers while transporting or handling at the site where materials and waste are deposited.

I. Retain receipts from landfill or processor for materials disposed of.

J. At completion of project, submit copies of waste manifests to Owner and Owner's Representative.

END OF SECTION

SECTION 028236
REMOVAL OF CLASS II ASBESTOS CONTAINING MATERIALS

PART 1 GENERAL

1.01 APPLICABILITY

A. This section applies to Class II work as defined by OSHA 29 CFR 1926.1101 and means activities involving the removal of asbestos-containing materials (ACM), which is not thermal system insulation (TSI) or surfacing material. This includes, but is not limited to, the removal of asbestos-containing wallboard, floor tile and sheeting, roofing, siding, shingles, and construction mastics.

1.02 RELATED WORK SPECIFIED ELSEWHERE

A. Supervision by a competent person is specified in Section 013000 Administrative Requirements.

B. Installation of critical barriers is set forth in Section 015643 Temporary Enclosures.

C. Project decontamination procedures after removal are specified in Section 017333 Project Decontamination.

D. Disposal of asbestos-containing waste is specified in Section 028233 Disposal of Asbestos Containing Waste Material.

1.03 SUBMITTALS

A. Before the Start of Work: Submit the following to the Owner for review. No work shall begin until these submittals provided:
   1. Adhesive Removal Solvent: Submit product data, use instructions and recommendations from manufacturer of adhesive removal solvent intended for use.
   2. Include data substantiating that material complies with requirements.

PART 2 PRODUCTS

2.01 WETTING MATERIALS

A. For wetting prior to disturbance of Asbestos-Containing Materials use amended water:
   1. Amended Water: Provide water to which a surfactant has been added. Use a mixture of surfactant and water which results in wetting of the Asbestos-Containing Material and retardation of fiber release during disturbance of the material equal to or greater than that provided by the use of one ounce of a surfactant consisting of 50% polyoxyethylene ester and 50% polyoxyethylene ether mixed with five gallons of water.

2.02 POLYETHYLENE SHEET

A. Provide polyethylene film in the largest size possible to minimize seams, 4 or 6 mil thick as indicated, frosted or black as indicated.

2.03 DUCT TAPE

A. Provide duct tape in 2" or 3" widths as indicated, with an adhesive which is formulated to stick aggressively to sheet polyethylene.

2.04 SPRAY CEMENT

A. Provide spray adhesive in aerosol cans that is specifically formulated to stick tenaciously to sheet polyethylene.

2.05 DISPOSAL BAGS

2.06 ADHESIVE REMOVAL SOLVENT

A. Provide a slow-drying solvent intended to remove tile adhesive.

B. Provide material that is not flammable, does not create combustible vapors and has no significant inhalation hazard.

PART 3 EXECUTION

3.01 ALL CLASS II WORK

A. Competent Person: All Class II work shall be supervised by a competent person as defined by the regulation.

B. Critical Barriers: Critical barriers shall be placed over all openings to the regulated area or utilize an alternative barrier or isolation method that prevents migration of airborne asbestos from the regulated area and meets the requirements of the regulation.

C. Impermeable Dropcloths: Impermeable dropcloths shall be placed on surfaces beneath all removal activity. Dropcloths shall extend horizontally in all directions one foot for every vertical foot the work surface is above the floor.

D. Comply with the work practices specified for each type of Class II asbestos work being performed as outlined in the following sections.

E. HEPA Filtration: Vacuums, powered saws and other equipment that may generate asbestos fibers shall be equipped with HEPA-filtered exhausts.

F. Wet Methods: Wet methods or wetting agents to control employee exposures shall be employed.

G. OSHA requires the prompt cleanup of wastes and debris and placement in leak-tight containers and labeled with the following information:

H. Establish a decontamination area that is adjacent to the regulated area for decontamination of employees and their equipment. At a minimum the decontamination area shall consist of an airlock chamber and an area covered by an impermeable drop cloth on the floor or horizontal working surface of sufficient size to accommodate cleaning of equipment and removing personal protective equipment without spreading contamination. Work clothes must be cleaned with a HEPA vacuum before clothes are removed. All equipment and surfaces of containers filled with ACM must be cleaned prior to removing them from the equipment room or area. Entry to and exit from the regulated area shall be through the decontamination area.

3.02 VINYL AND ASPHALT FLOORING MATERIALS

A. Before beginning work with any material for which a Safety Data Sheet has been submitted provide workers with the required protective equipment. Require that appropriate protective equipment be used at all times.

B. Flooring or its backing shall not be sanded.

C. Vacuums equipped with HEPA filter, disposable dust bag, and metal floor tool (no brush) shall be used to clean floors.

D. Resilient sheeting shall be removed by cutting with wetting of the snip point and wetting during delamination.

E. Rip-up of resilient sheet floor material is prohibited unless performed in a negative pressure enclosure.

F. All scraping of residual adhesive and/or backing shall be performed using wet methods.

G. Dry sweeping is prohibited.

H. Mechanical chipping is prohibited unless performed in a negative pressure enclosure.

I. Tiles shall be removed intact, unless the contractor demonstrates that intact removal is not possible.

J. When tiles can be heated and can be removed intact, wetting may be omitted.

K. Removal of vinyl and asphalt sheet flooring materials shall include all flooring mastics and/or adhesives. Contractor shall only use solvents that have been approved by Owner.

L. Removal of vinyl and asphalt sheet flooring materials shall include all floor fillers and/or leveling compounds.

1. If floor filler and/or leveling material is encountered underneath the flooring materials, the floor filler and/or leveling material shall be removed with the same requirements as the flooring materials and shall be considered a changed condition if the quantity exceeds the assumed amount included in the NTE form.

END OF SECTION

This page intentionally left blank

SECTION 028400
POLYCHLORINATED BIPHENYLS (PCB) REMEDIATION

PART 1 GENERAL

1.01 SECTION INCLUDES

A. Furnish labor, materials, services, and equipment necessary for complete removal and storage of the following demolition debris in accordance with federal, state, and local regulations:

1.02 RELATED REQUIREMENTS

A. Section 017000 - Execution and Closeout Requirements: Other selective demolition procedures.

B. Section 017419 - Construction Waste Management and Disposal: Disposal of normal demolition debris.

1.03 DEFINITIONS

A. Toxic Substances: PCBs, mercury, and other substances regulated under the U.S. Federal Toxic Substances Control Act (TSCA); substances covered by this specification are identified under SECTION INCLUDES.

B. Leak: Leak or leaking means any instance of a toxic substance present on any portion of the external surface of an item of equipment or container.

C. Spill: Spill means both intentional and unintentional spills, leaks, and other uncontrolled discharges when the release results in any quantity of toxic substances running off or about to run off the external surface of an item of equipment or other source, as well as the contamination resulting from those releases.

1.04 REFERENCE STANDARDS

A. 29 CFR 1910.1000 - Air Contaminants.

B. 40 CFR 761 - Polychlorinated Biphenyls (PCBs) Manufacturing, Processing, Distribution In Commerce, And Use Prohibitions.

1.05 SUBMITTALS

A. See Section 013000 - Administrative Requirements, for submittal procedures, except that all submittals are to be made to Owner, not to Architect.

1.06 QUALITY ASSURANCE

A. Notification: Notify Owner 24 hours prior to the start of toxic substance removal work.

B. Reference Documents: At all times maintain one copy each of 29 CFR 1910.1000, 40 CFR 761, and Contractor work practices for removal and storage of toxic substances, at field office and one copy each in view at project site.

C. Training: Instruct employees on dangers of exposure to toxic substances present and applicable regulations.

PART 2 PRODUCTS

2.01 EQUIPMENT

PART 3 EXECUTION

3.01 TEMPORARY STORAGE PRIOR TO DISPOSAL

A. Storage Site: Obtain Owner's approval in advance of areas, spaces, rooms, and buildings used to store toxic substances prior to disposal off-site; storage sites must comply with the following criteria without exception:
   1. Adequate roof and walls to prevent rainwater from reaching stored toxic substances.
   2. No drain valves, floor drains, expansion joints, sewer lines, or other openings that would permit liquids to flow from area.

3. Floors constructed of continuous smooth and impervious materials, such as vinyl tile, sheet vinyl, epoxy resin, or concrete to prevent or minimize penetrations of toxic substances.

3.02 CLEANING

A. Clean up and containerize wastes daily.

B. Do not remove Control Area boundaries or warning signs prior to Owner's approval.

3.03 DISPOSAL BY CONTRACTOR

A. Comply with disposal requirements and procedures specified in 40 CFR 761 ; deliver toxic substance waste to a disposal facility having required permits.
   1. Do not accept toxic substance waste unless it is accompanied by a manifest signed by Owner.
   2. Before transporting toxic substance waste, sign and date manifest acknowledging acceptance of the waste from Owner.
   3. Return a signed copy to Owner before leaving project site.
   4. Ensure that manifest accompanies waste at all times.
   5. Submit transporter certification of notification to EPA of their toxic substance waste activities.

B. Payment will not be made until Certificate of Disposal has been furnished to Owner.

C. Certificate of Disposal: Submit to Owner within 30 days of date that disposal of waste identified on manifest was completed; include on the certificate:
   1. The identity of disposal facility, by name, address, and EPA identification number.
   2. The identity of waste affected by Certificate of Disposal including reference to manifest number for the shipment.
   3. Statement certifying the fact of disposal of the identified waste, including date(s) of disposal, and identifying disposal process used.
   4. Certification as defined in 40 CFR 761, Section 3.

END OF SECTION

SECTION 028410
HAZARDOUS WASTE MANAGEMENT

PART 1 - GENERAL

1.01 RELATED SECTIONS

A. Section 014113 - Asbestos Abatement Codes, Regulations, and Standards - Asbestos Abatement describes federal, state and local regulations applicable to asbestos.

B. Section 028233 - Disposal of Asbestos Containing Waste Materials describes the handling and disposal of asbestos-containing waste.

1.02 DESCRIPTION OF THE WORK:

A. This section describes the segregation, packaging, labeling, transport, and disposal of non-asbestos containing hazardous waste materials generated by demolition activities and the subsequent shipment of properly packaged and labeled waste materials to an approved disposal site.

1.03 CODES AND REGULATIONS

A. General Applicability of Codes and Regulations: Except to the extent that more explicit or more stringent requirements are written directly into the Contract Documents, all applicable codes and regulations have the same force and effect (and are made a part of the contract documents by reference) as if copied directly into the Contract Documents, or as if published copies are bound herewith.

B. Contractor Responsibility: The Contractor shall assume full responsibility and liability for the compliance with all applicable Federal, State, and local regulations pertaining to hazardous waste management and disposal. Hold the Owner and Designer harmless for failure to comply with any applicable work, hauling, disposal, safety, health or other regulation on the part of the Contractor, the Contractor's employees, or Subcontractors.

C. Federal Requirements: which govern the management, hauling and disposal of hazardous waste include but are not limited to the following:
   1. DOT: U. S. Department of Transportation, including but not limited to:
      a. Hazardous Substances
         1) Title 49, Part 171 and 172 of the Code of Federal Regulations
      b. Hazardous Material Regulations
         1) General Awareness and Training Requirements for Handlers, Loaders and Drivers
         2) Title 49, Parts 171-180 of the Code of Federal Regulations
      c. Hazardous Material Regulations
         1) Editorial and Technical Revisions
         2) Title 49, Parts 171-180 of the Code of Federal Regulations
   2. EPA: U. S. Environmental Protection Agency (EPA), including but not limited to:
      a. Management of Hazardous Wastes Resource Conservation and Recovery Act (RCRA)
         1) Title 40, Parts 260- 268 of the Code of Federal Regulations

D. State Requirements: Abide by all state requirements which govern the management, hauling and disposal of hazardous waste.

E. Local Requirements: Abide by all local requirements which govern the management, hauling and disposal of hazardous waste.

1.04 DEFINITIONS:

A. Toxicity Characteristic Leaching Procedure (TCLP): A laboratory test method to determine the mobility of both organic and inorganic analytes present in liquid, solid, and multiphasic wastes performed in accordance with test methods required under 40 CFR Part 268.

1.05 SUBMITTALS:

A. Before Start of Work: Submit the following to the Owner for review. Do not start work until these submittals are returned with Owner's action stamp indicating that the submittal is returned for unrestricted use.
   1. Copy of state and local licenses for waste hauler.
   2. U.S. EPA Identification Number of waste hauler.
   3. Name and address of waste disposal facility where hazardous waste materials are to be disposed including:
      a. Contact person and telephone number.
      b. Copy of state license and permit.
      c. Disposal facility permits:
   4. Specimen copy of Uniform Hazardous Waste Manifest form.
   5. Copy of EPA Notice of Hazardous Waste activity form
   6. Copy of forms requires by state and local agencies
   7. Sample of disposal label to be used.

B. During Work: Submit the following as required by the work:
   1. TCLP test results, as required to characterize waste for segregation and packaging purposes.
   2. Submit copies of all executed manifests and disposal site receipts to the Owner and/or Owner's Environmental Consultant.

PART 2 - PRODUCTS:

2.01 MATERIALS

A. Disposal Bags: Provide 6 mil thick leak-tight polyethylene bags.

B. DOT Hazardous Waste Disposal Drums: Provide DOT 17-H Open -Top Drums (55 gallon) in accordance with DOT regulations title 49 CFR Parts 173, 178, and 179.

C. DOT Hazardous Waste Labels: in accordance with DOT regulations Title 49 CFR parts 173, 178, and 179.

D. The Owner will provide boxes, drums, etc. for the proper handling, transport and disposal of these items.

PART 3 - EXECUTION

3.01 GENERAL

A. Do not mix potentially hazardous waste streams. Where feasible, separate each type of hazardous waste from other types of hazardous wastes, from asbestos waste and from construction waste.

B. Segregate, package, label, transport and dispose of Hazardous Waste in accordance with DOT, EPA, State and Local regulations.

3.02 HAZARDOUS WASTE DESIGNATION

A. Where not otherwise designated by the Owner as Hazardous waste, characterize all suspect waste products by conducting representative TCLP testing.

B. Testing of components by use of TCLP will be completed by Owner's Environmental Consultant prior to initiating this project.
   1. A schedule of materials that must be managed as hazardous waste will be coordinated during the pre-construction meeting.

C. Representative sampling of waste products will be in accordance with EPA Document SW 846.

D. TCLP test analysis will be performed in accordance with EPA Method 1311.

3.03 HAZARDOUS WASTE:

A. The following waste products are designated by the Owner as non-salvageable and as Hazardous Waste Types:

1. Waste Type A: PCB waste.
    a. PCB-containing ballasts from fluorescent light fixtures.
2. Waste Type B: Mercury-containing waste.
    a. Individually bagged mercury-containing thermostats.
    b. Fluorescent, and mercury-vapor lamps.

3.04 HAZARDOUS WASTE PACKAGING AND LABELING:

A. Package each segregated hazardous waste Type A and B in specified containers as follows (Important: Do Not mix waste streams):
    1. Waste Type A - Packaging to be provided by Owner
        a. Package in DOT 17-H Open-Top Drums
        b. Fill to capacity only with Waste Type A (Do Not Mix Waste Stream types).
        c. Install gasket on lid, apply lock ring, and seal.
        d. Apply Hazardous Waste Label to drum side.
        e. Enter DOT Shipping Data as follows: RQ Waste Polychlorinated Biphenols, 9, UN-2315, PG-II, (M001).
        f. Adjacent to each label, enter the date indicating when waste was first placed in each drum.
    2. Waste Type B - Packaging to be provided by Owner
        a. Package in DOT 17-H Open-Top Drums with Polyethylene disposal Bag liners
        b. Fill liner bags only with Waste Type B (Do Not Mix Waste Stream types); then neck liner bags down into DOT 17-H Open-Top Drum and seal with duct tape.
        c. Install gasket on lid, apply lock ring, and seal.
        d. Apply Hazardous Waste Label to drum side.
        e. Enter DOT Shipping Data as follows: RQ Hazardous Waste Solid, NOS, 9, NA3077, PG-III, (D009).
        f. Adjacent to each label, enter the date indicating when waste was first placed in each drum.

B. Sealed and Labeled Containers: maintain all containers in a continuously sealed condition after they have been sealed.
    1. Do not reopen sealed containers.
    2. Do not place additional waste in sealed containers.

3.05 TEMPORARY STORAGE:

A. Partially filled containers of hazardous waste may be stored at the work site for intermittent packaging provided that:
    1. Each container is properly labeled when it is first placed in service;
    2. Each container remains closed at all times except when compatible waste types are added; and
    3. When moved from site to site, each container remains within the geographic boundaries of the facility without moving nor crossing public access highways.

3.06 REMOVAL OF HAZARDOUS WASTES:

A. Remove containers of hazardous waste from the work site within seventy-two (72) hours of being filled.
    1. Transporting filled containers from the work site to an approved disposal site or recycling center. Coordinate with Owner prior to transportation to determine the destiny of the wastes.
    2. Continuously maintain custody of all hazardous material generated at the work site including security, short-term storage, transportation and disposition until custody is transferred to an approved disposal site or recycling center. Document continuous chain-of custody.

3. Do not remove, or cause to be removed, hazardous waste from Owner's property without a legally executed Uniform Hazardous Waste manifest, which will be provided by the Owner.
4. At completion of hauling and disposal of each load, submit copy of waste manifest, chain of custody form, and landfill receipt to Owner.

3.07 RECYCLING AND RECOVERY:

A. Turn over waste which contains materials for which recovery and/or recycling is possible to an approved recycling center. Materials subject to recycling include:
1. Fluorescent light tubes.
2. Thermostats with mercury switches.
3. Lead acid batteries
4. Combustible lead-based painted building components and lead-based paint chips.

3.08 BACKCHARGES:

A. Where Contractor fails to fulfill packaging, handling, transport or disposal requirements as outlined herein, Owner may charge back to the Contractor all costs associated with insuring that hazardous wastes are segregated, packaged, transported and disposed of in accordance with all applicable Federal and State regulations.

B. Environmental pollution of Owner's property or other environments resulting from Contractor's hazardous waste management activities may be promptly remediated under Owner's direction, to the Owner's sole satisfaction, and at the Contractor's sole expense.

C. Contractor agrees to either reimburse the Owner or reduce the Contract amount by change order to cover all costs associated with waste re-packaging, waste re-segregation, or pollution remediation efforts.

3.09 REMOVAL OF NON-HAZARDOUS WASTE MATERIALS:

A. Transport and legally dispose of non-hazardous waste products, materials, residues and refuse at a location not on Owner's property.

B. Non-hazardous waste products, materials, residues and refuse include, but are not necessarily limited to:
1. Materials which are determined to be non-hazardous wastes through objective sampling in accordance with EPA Document SW-846 and laboratory analysis in accordance with EPA Method 1311.
2. Personnel protective clothing and safety equipment with de minimis or trace contamination, as determined by visual inspection by Owner's Environmental Consultant.

C. Keep premises in a clean and orderly condition during performance of abatement work.

D. Place non-hazardous construction debris wastes on a daily basis in secure containers for local landfill disposal.

END OF SECTION

SECTION 030100
MAINTENANCE OF CONCRETE

PART 1 GENERAL

1.01 SECTION INCLUDES

A. Cleaning of existing concrete surfaces.

B. Repair of exposed structural, shrinkage, and settlement cracks.

C. Resurfacing of concrete surfaces having spalled areas and other damage.

D. Repair of deteriorated concrete.

E. Scope of Work: As indicated on drawings.

1.02 RELATED REQUIREMENTS

A. Section 033000 - Cast-in-Place Concrete: Finishing of concrete surface to tolerance; floating, troweling, and similar operations; curing.

1.03 REFERENCE STANDARDS

A. ASTM C33/C33M - Standard Specification for Concrete Aggregates.

B. ASTM C150/C150M - Standard Specification for Portland Cement.

C. ASTM C404 - Standard Specification for Aggregates for Masonry Grout.

1.04 SUBMITTALS

A. See Section 013000 - Administrative Requirements, for submittal procedures.

B. Product Data: Indicate product standards, physical and chemical characteristics, technical specifications, limitations, maintenance instructions, and general recommendations regarding each material.

C. Project Record Documents: Accurately record actual locations of structural reinforcement repairs and type of repair.

1.05 QUALITY ASSURANCE

A. Manufacturer Qualifications: Company specializing in manufacturing products specified in this section, with not less than three years of documented experience.

B. Cleaner Qualifications: Company specializing in, and with minimum of 3 years of experience in, the type of cleaning specified.

C. Installer Qualifications: Company specializing in performing work of the type specified and with minimum of 3 years of documented experience.

1.06 DELIVERY, STORAGE, AND HANDLING

A. Comply with manufacturers' instructions for storage, shelf life limitations, and handling of products.

PART 2 PRODUCTS

2.01 CLEANING MATERIALS

A. Degreaser:
   1. Manufacturers:
      a. LATICRETE International, Inc; CITREX: www.laticrete.com/#sle.
      b. SpecChem, LLC; Orange Peel-Citrus Cleaner: www.specchemllc.com/#sle.
      c. W. R. Meadows, Inc: www.wrmeadows.com/#sle.
      d. Substitutions: See Section 016000 - Product Requirements.

B. Detergent: Non-ionic detergent.

2.02 CEMENTITIOUS PATCHING AND REPAIR MATERIALS

A. Finish: Repairs, cleanings, etc. materials shall be reviewed for the need for finish. Finish of new or repaired work shall match the color of adjoining concrete.

B. Manufacturers:
   1. Adhesives Technology Corporation: www.atcepoxy.com/#sle.
   2. ARDEX Engineered Cements: www.ardexamericas.com/#sle.
   3. Dayton Superior Corporation: www.daytonsuperior.com/#sle.
   4. Kaufman Products Inc: www.kaufmanproducts.net/#sle.
   5. The QUIKRETE Companies: www.quikrete.com/#sle.
   6. SpecChem, LLC: www.specchemllc.com/#sle.
   7. Stauf USA LLC: www.staufusa.com/#sle.
   8. W. R. Meadows, Inc: www.wrmeadows.com/#sle.
   9. Substitutions: See Section 016000 - Product Requirements.

C. Cementitious Repair Mortar, Trowel Grade: One- or two-component, factory-mixed, polymer-modified cementitious mortar.

2.03 EPOXY PATCHING AND REPAIR MATERIALS

A. Manufacturers:
   1. Dayton Superior Corporation: www.daytonsuperior.com/#sle.
   2. Kaufman Products Inc.: www.kaufmanproducts.net/#sle.
   3. SpecChem, LLC: www.specchemllc.com/#sle.
   4. Sto Corp: www.stocorp.com/#sle.
   5. W. R. Meadows, Inc: www.wrmeadows.com/#sle.
   6. Substitutions: See Section 016000 - Product Requirements.

B. Epoxy Injection Adhesive:
   1. Manufacturers:
      a. Dayton Superior Corporation: www.daytonsuperior.com/#sle.
      b. Kaufman Products Inc; SurePoxy HM, SurePoxy HMLV, SurePoxy HMLV Class B, or SurePoxy HMSLV: www.kaufmanproducts.net/#sle.
      c. SpecChem, LLC; SpecPoxy 1000; www.specchemllc.com/#sle.
      d. W. R. Meadows, Inc; Rezi-Weld LV, Rezi-Weld LV State, Rezi-Weld (IP), or Rezi-Weld Gel Paste: www.wrmeadows.com/#sle.
      e. Substitutions: See Section 016000 - Product Requirements.

2.04 ACCESSORIES

A. Anchoring Adhesive: Self-leveling or non-sag as applicable.

B. Portland Cement: ASTM C150/C150M, Type I, grey.

C. Sand: ASTM C33/C33M or ASTM C404; uniformly graded, clean.

D. Water: Clean and potable.

PART 3 EXECUTION

3.01 EXAMINATION

A. Verify that surfaces are ready to receive work.

B. Beginning of installation means acceptance of substrate.

3.02 CLEANING EXISTING CONCRETE

A. Clean concrete surfaces of dirt or other contamination using the gentlest method that is effective.
   1. Try the gentlest method first, then, if not clean enough, use a less gentle method taking care to watch for impending damage.
   2. Clean out cracks and voids using same methods.

B. The following are acceptable cleaning methods, in order from gentlest to less gentle:
   1. Water washing using low-pressure, maximum of 100 psi, and, if necessary, brushes with natural or synthetic bristles.
   2. Increasing the water washing pressure to maximum of 400 psi.
   3. Adding detergent to washing water; with final water rinse to remove residual detergent.
   4. Steam-generated low-pressure hot-water washing.

3.03 CRACK REPAIR USING EPOXY ADHESIVE INJECTION

A. Repair exposed cracks.

B. Provide temporary entry ports spaced to accomplish movement of fluids between ports; no deeper than the depth of the crack to be filled or port size diameter no greater than the thickness of the crack. Provide temporary seal at concrete surface to prevent leakage of adhesive.

C. Inject adhesive into ports under pressure using equipment appropriate for particular application.

D. Begin injection at lower entry port and continue until adhesive appears in adjacent entry port. Continue from port to port until entire crack is filled.

E. Remove temporary seal and excess adhesive.

F. Clean surfaces adjacent to repair and blend finish.

3.04 CONCRETE SURFACE REPAIR USING CEMENTITIOUS MATERIALS

A. Clean concrete surfaces, cracks, and joints of dirt, laitance, corrosion, and other contamination using method(s) specified above and allow to dry.

B. Apply coating of bonding agent to entire concrete surface to be repaired.

C. Fill voids with cementitious mortar flush with surface.

D. Apply repair mortar by steel trowel to a minimum thickness of 1/4 inch over entire surface, terminating at a vertical change in plane on all sides.

E. Trowel finish to match adjacent concrete surfaces.

END OF SECTION

This page intentionally left blank

SECTION 031000
CONCRETE FORMING AND ACCESSORIES

PART 1 GENERAL

1.01 SECTION INCLUDES

A. Formwork for cast-in-place concrete, with shoring, bracing and anchorage.

B. Openings for other work.

C. Form accessories.

D. Form stripping.

1.02 RELATED REQUIREMENTS

A. Section 032000 - Concrete Reinforcing.

B. Section 033000 - Cast-in-Place Concrete.

C. Section 051200 - Structural Steel Framing: Placement of embedded steel anchors and plates in cast-in-place concrete.

1.03 REFERENCE STANDARDS

1.04 SUBMITTALS

A. See Section 013000 - Administrative Requirements, for submittal procedures.

B. Shop Drawings: Indicate pertinent dimensions, materials, bracing, and arrangement of joints and ties.

C. Design Data: As required by authorities having jurisdiction.

1.05 QUALITY ASSURANCE

A. Designer Qualifications: Design formwork under direct supervision of a Professional Structural Engineer experienced in design of concrete formwork and licensed in the State in which the Project is located.

PART 2 PRODUCTS

2.01 FORMWORK - GENERAL

A. Provide concrete forms, accessories, shoring, and bracing as required to accomplish cast-in-place concrete work.

B. Design and construct concrete that complies with design with respect to shape, lines, and dimensions.

C. Chamfer outside corners of beams, joists, columns, and walls.

D. Comply with applicable state and local codes with respect to design, fabrication, erection, and removal of formwork.

E. Comply with relevant portions of ACI CODE-318, ACI PRC-347, and ACI SPEC-301.

2.02 WOOD FORM MATERIALS

A. Application: Use for edge forms and unexposed finish concrete only.

B. Form Materials: At the discretion of the Contractor.

2.03 REMOVABLE PREFABRICATED FORMS

2.04 FORMWORK ACCESSORIES

A. Form Ties: Removable type, galvanized metal, fixed length, cone type, with waterproofing washer, free of defects that could leave holes larger than 1 inch in concrete surface.

B. Form Release Agent: Capable of releasing forms from hardened concrete without staining or discoloring concrete or forming bugholes and other surface defects, compatible with concrete and form materials, and not requiring removal for satisfactory bonding of coatings to be applied.

1. Do not use materials containing diesel oil or petroleum-based compounds.
2. Products:
    a. SpecChem, LLC; Bio Strip WB (water-based): www.specchemllc.com/#sle.
    b. Substitutions: See Section 016000 - Product Requirements.

C. Flashing Reglets: Galvanized steel, at least 22 gage, 0.0299 inch thick, longest possible lengths, with alignment splines for joints, foam filled, release tape sealed slots, anchors for securing to concrete formwork.

D. Nails, Spikes, Lag Bolts, Through Bolts, Anchorages: Sized as required, of sufficient strength and character to maintain formwork in place while placing concrete.

E. Embedded Anchor Shapes, Plates, Angles and Bars: As specified in Section 051200.

PART 3 EXECUTION

3.01 EXAMINATION

A. Verify lines, levels and centers before proceeding with formwork. Ensure that dimensions agree with drawings.

3.02 EARTH FORMS

A. Earth forms are not permitted unless specifically indicated on drawings.

B. Hand trim sides and bottom of earth forms. Remove loose soil prior to placing concrete.

3.03 ERECTION - FORMWORK

A. Erect formwork, shoring and bracing to achieve design requirements, in accordance with requirements of ACI SPEC-301.

B. Provide bracing to ensure stability of formwork. Shore or strengthen formwork subject to overstressing by construction loads.

C. Arrange and assemble formwork to permit dismantling and stripping. Do not damage concrete during stripping. Permit removal of remaining principal shores.

D. Align joints and make watertight. Keep form joints to a minimum.

E. Obtain approval before framing openings in structural members that are not indicated on drawings.

F. Coordinate this section with other sections of work that require attachment of components to formwork.

G. If formwork is placed after reinforcement, resulting in insufficient concrete cover over reinforcement, request instructions from Architect before proceeding.

3.04 APPLICATION - FORM RELEASE AGENT

A. Apply form release agent on formwork in accordance with manufacturer's recommendations.

B. Apply prior to placement of reinforcing steel, anchoring devices, and embedded items.

C. Do not apply form release agent where concrete surfaces will receive special finishes or applied coverings that are affected by agent. Soak inside surfaces of untreated forms with clean water. Keep surfaces coated prior to placement of concrete.

3.05 INSERTS, EMBEDDED PARTS, AND OPENINGS

A. Provide formed openings where required for items to be embedded in passing through concrete work.

B. Locate and set in place items that will be cast directly into concrete.

C. Coordinate with work of other sections in forming and placing openings, slots, reglets, recesses, sleeves, bolts, anchors, other inserts, and components of other work.

D. Install accessories in accordance with manufacturer's instructions, so they are straight, level, and plumb. Ensure items are not disturbed during concrete placement.

E. Provide temporary ports or openings in formwork where required to facilitate cleaning and inspection. Locate openings at bottom of forms to allow flushing water to drain.

F. Close temporary openings with tight fitting panels, flush with inside face of forms, and neatly fitted so joints will not be apparent in exposed concrete surfaces.

G. Form Anchors and Hangers:
   1. Do not use anchors and hangers in exposed concrete leaving exposed metal at concrete surface.
   2. Symmetrically arrange hangers supporting forms from structural steel members to minimize twisting or rotation of member.
   3. Penetration of structural steel members is not permitted.

3.06 FORM CLEANING

A. Clean forms as erection proceeds, to remove foreign matter within forms.

B. Clean formed cavities of debris prior to placing concrete.
   1. Flush with water or use compressed air to remove remaining foreign matter. Ensure that water and debris drain to exterior through clean-out ports.
   2. During cold weather, remove ice and snow from within forms. Do not use de-icing salts. Do not use water to clean out forms, unless formwork and concrete construction proceed within heated enclosure. Use compressed air or other means to remove foreign matter.

3.07 FORMWORK TOLERANCES

A. Construct formwork to maintain tolerances required by ACI SPEC-117, unless otherwise indicated.

B. Camber slabs and beams in accordance with ACI SPEC-301.

3.08 FIELD QUALITY CONTROL

A. Inspect erected formwork, shoring, and bracing to ensure that work is in accordance with formwork design, and to verify that supports, fastenings, wedges, ties, and items are secure.

3.09 FORM REMOVAL

A. Do not remove forms or bracing until concrete has gained sufficient strength to carry its own weight and imposed loads.

B. Loosen forms carefully. Do not wedge pry bars, hammers, or tools against finish concrete surfaces scheduled for exposure to view.

C. Store removed forms to prevent damage to form materials or to fresh concrete. Discard damaged forms.

END OF SECTION

This page intentionally left blank

SECTION 032000
CONCRETE REINFORCING

PART 1 GENERAL

1.01 SECTION INCLUDES

A. Reinforcing steel for cast-in-place concrete.

B. Supports and accessories for steel reinforcement.

1.02 RELATED REQUIREMENTS

A. Section 033000 - Cast-in-Place Concrete.

1.03 REFERENCE STANDARDS

A. ACI CODE-318 - Building Code for Structural Concrete—Code Requirements and Commentary.

B. ACI MNL-66 - ACI Detailing Manual.

C. ACI SPEC-301 - Specifications for Concrete Construction.

D. ASTM A706/A706M - Standard Specification for Deformed and Plain Low-Alloy Steel Bars for Concrete Reinforcement.

E. ASTM A767/A767M - Standard Specification for Zinc-Coated (Galvanized) Steel Bars for Concrete Reinforcement.

F. ASTM A1064/A1064M - Standard Specification for Carbon-Steel Wire and Welded Wire Reinforcement, Plain and Deformed, for Concrete.

G. ASTM A1094/A1094M - Standard Specification for Continuous Hot-Dip Galvanized Steel Bars for Concrete Reinforcement.

1.04 SUBMITTALS

A. See Section 013000 - Administrative Requirements, for submittal procedures.

B. Shop Drawings: Comply with requirements of ACI MNL-66 Include bar schedules, shapes of bent bars, spacing of bars, and location of splices.
   1. Prepare shop drawings under seal of a Professional Structural Engineer experienced in design of work of this type and licensed in the State in which the Project is located.

C. Manufacturer's Certificate: Certify that reinforcing steel and accessories supplied for this project meet or exceed specified requirements.

D. Reports: Submit certified copies of mill test report of reinforcement materials analysis.

1.05 QUALITY ASSURANCE

A. Perform work of this section in accordance with ACI SPEC-301.

PART 2 PRODUCTS

2.01 REINFORCEMENT

A. Reinforcing Steel: ASTM A706/A706M, deformed low-alloy steel bars.
   1. Continuously galvanized in accordance with ASTM A1094/A1094M.

B. Steel Welded Wire Reinforcement (WWR): Galvanized, deformed type; ASTM A1064/A1064M.
   1. Form: Flat Sheets.
   2. WWR Style: As indicated on drawings.

C. Reinforcement Accessories:
   1. Chairs, Bolsters, Bar Supports, Spacers: Sized and shaped for adequate support of reinforcement during concrete placement.
   2. Provide stainless steel components for placement within 1-1/2 inches of weathering surfaces.

2.02 RE-BAR SPLICING:

A. Dowel Bar Splicer with Dowel-Ins: Mechanical devices for splicing reinforcing bars.
   1. Comply with ACI CODE-318 steel reinforcing design strength requirements for splices in tension and compression.

2.03 FABRICATION

A. Locate reinforcing splices not indicated on drawings at point of minimum stress.

PART 3 EXECUTION

3.01 PLACEMENT

A. Place, support and secure reinforcement against displacement. Do not deviate from required position.

B. Accommodate placement of formed openings.

C. Maintain concrete cover around reinforcing as follows:

D. Comply with applicable code for concrete cover over reinforcement.

3.02 FIELD QUALITY CONTROL

A. An independent testing agency, as specified in Section 014000 - Quality Requirements, will inspect installed reinforcement for compliance with contract documents before concrete placement.

END OF SECTION

SECTION 033000
CAST-IN-PLACE CONCRETE

PART 1 GENERAL

1.01 SECTION INCLUDES

A. Floors and slabs on grade.

B. Joint devices associated with concrete work.

C. Miscellaneous concrete elements, including Fence and Gate Post Foundations.

D. Concrete curing.

1.02 RELATED REQUIREMENTS

A. Section 033511 - Concrete Floor Finishes: Densifiers, hardeners, applied coatings, and polishing.

B. Section 079200 - Joint Sealants: Products and installation for sealants and joint fillers for saw cut joints and isolation joints in slabs.

1.03 REFERENCE STANDARDS

A. ACI CODE-318 - Building Code for Structural Concrete—Code Requirements and Commentary.

B. ACI PRC-211.1 - Selecting Proportions for Normal-Density and High Density-Concrete - Guide.

C. ACI PRC-302.1 - Guide to Concrete Floor and Slab Construction.

D. ACI PRC-304 - Guide for Measuring, Mixing, Transporting, and Placing Concrete.

E. ACI PRC-305 - Guide to Hot Weather Concreting.

F. ACI PRC-306 - Guide to Cold Weather Concreting.

G. ACI PRC-308 - Curing of Concrete—Guide.

H. ACI SPEC-301 - Specifications for Concrete Construction.

I. ASTM C33/C33M - Standard Specification for Concrete Aggregates.

J. ASTM C39/C39M - Standard Test Method for Compressive Strength of Cylindrical Concrete Specimens.

K. ASTM C94/C94M - Standard Specification for Ready-Mixed Concrete.

L. ASTM C143/C143M - Standard Test Method for Slump of Concrete.

M. ASTM C494/C494M - Standard Specification for Chemical Admixtures for Concrete.

N. ASTM C685/C685M - Standard Specification for Concrete Made by Volumetric Batching and Continuous Mixing.

O. ASTM C881/C881M - Standard Specification for Epoxy-Resin-Base Bonding Systems for Concrete.

P. ASTM C1059/C1059M - Standard Specification for Latex Agents for Bonding Fresh to Hardened Concrete.

Q. ASTM E1643 - Standard Practice for Selection, Design, Installation, and Inspection of Water Vapor Retarders Used in Contact with Earth or Granular Fill Under Concrete Slabs.

R. ASTM E1745 - Standard Specification for Plastic Water Vapor Retarders Used in Contact with Soil or Granular Fill under Concrete Slabs.

1.04 SUBMITTALS

A. See Section 013000 - Administrative Requirements for submittal procedures.

B. Product Data: Submit manufacturers' data on manufactured products showing compliance with specified requirements and installation instructions.

C. Mix Design: Submit proposed concrete mix design.
   1. Indicate proposed mix design complies with requirements of ACI SPEC-301, Section 4 - Concrete Mixtures.
   2. Indicate proposed mix design complies with requirements of ACI CODE-318, Chapter 5 - Concrete Quality, Mixing and Placing.

D. Test Reports: Submit report for each test or series of tests specified.

E. Project Record Documents: Accurately record actual locations of embedded utilities and components that will be concealed from view upon completion of concrete work.

F. Warranty: Submit manufacturer warranty and ensure forms have been completed in Owner's name and registered with manufacturer.

1.05 QUALITY ASSURANCE

A. Perform work of this section in accordance with ACI SPEC-301 and ACI CODE-318.

B. Follow recommendations of ACI PRC-305 when concreting during hot weather.

C. Follow recommendations of ACI PRC-306 when concreting during cold weather.

1.06 WARRANTY

A. See Section 017800 - Closeout Submittals for additional warranty requirements.

PART 2 PRODUCTS

2.01 FORMWORK

A. Comply with requirements of Section 031000.

2.02 REINFORCEMENT MATERIALS

A. Comply with requirements of Section 032000.

B. Cement: ASTM C150/C150M, Type IL - Limestone Portland type.
   1. Acquire cement for entire project from same source.

C. Fine and Coarse Aggregates: ASTM C33/C33M.
   1. Acquire aggregates for entire project from same source.

2.03 ADMIXTURES

A. Chemical Admixture:
   1. Manufacturers:
      a. W.R. Meadows: www.wrmeadow.
      b. Grace Construction Products: www.na.graceconstruction.com.
      c. Fritz-Pak Corporation: www.fritzpak.com.
      d. Substitutions: See Section 016000 - Product Requirements.

B. Do not use chemicals that will result in soluble chloride ions in excess of 0.1 percent by weight of cement.

C. High Range Water Reducing Admixture: ASTM C494/C494M Type F.

D. Water Reducing Admixture: ASTM C494/C494M Type A.

2.04 ACCESSORY MATERIALS

A. Underslab Vapor Retarder: Multi-layer, fabric-, cord-, grid-, or aluminum-reinforced polyethylene or equivalent, complying with ASTM E1745, Class A; stated by manufacturer as suitable for installation in contact with soil or granular fill under concrete slabs. The use of single ply polyethylene is prohibited.
   1. Accessory Products: Vapor retarder manufacturer's recommended tape, adhesive, mastic, prefabricated boots, etc., for sealing seams and penetrations.
   2. Products:
      a. Henry Company; Moistop Ultra 15: www.henry.com/#sle.
      b. ISI Building Products; Viper VaporCheck II 15-mil (Class A): www.isibp.com/#sle.

c. Stego Industries, LLC: www.stegoindustries.com.
d. W. R. Meadows, Inc; PERMINATOR Class A - 10 mils (0.25 mm): www.wrmeadows.com/#sle.

2.05 BONDING AND JOINTING PRODUCTS

A. Latex Bonding Agent: Non-redispersable acrylic latex, complying with ASTM C1059/C1059M, Type II.
1. Products:
a. Kaufman Products Inc; SureBond: www.kaufmanproducts.net/#sle.
b. Kaufman Products Inc; SureWeld: www.kaufmanproducts.net/#sle.
c. SpecChem, LLC; Strong Bond Acrylic Bonder: www.specchemllc.com/#sle.
d. W. R. Meadows, Inc; ACRY-LOK: www.wrmeadows.com/#sle.
e. Euclid Chemical Company; ProdTamms Tammsweld: www.tamms.com.
f. Substitutions: See Section 016000 - Product Requirements.

B. Epoxy Bonding System:
1. Products:
a. Dayton Superior Corporation: www.daytonsuperior.com/#sle.
b. Kaufman Products Inc; SurePoxy HM EPL: www.kaufmanproducts.net/#sle.
c. Kaufman Products Inc; SurePoxy HM Class B: www.kaufmanproducts.net/#sle.
d. SpecChem, LLC; SpecPoxy 1000, SpecPoxy 2000, SpecPoxy 3000, or SpecPoxy 3000FS: www.specchemllc.com/#sle.
e. W. R. Meadows, Inc; Rezi-Weld Gel Paste, Rezi-Weld Gel Paste State, Rezi-Weld 1000: www.wrmeadows.com/#sle.
f. Fox Industries Inc.: www.foxind.com.
g. Substitutions: See Section 016000 - Product Requirements.

C. Slab Isolation Joint Filler: 1/2-inch thick, height equal to slab thickness, with removable top section forming 1/2-inch deep sealant pocket after removal.
1. Material: Closed-cell, non-absorbent, compressible polymer foam in sheet form.
2. Products:
a. W. R. Meadows, Inc; Deck-O-Foam Joint Filler with pre-scored top strip: www.wrmeadows.com/#sle.
b. Substitutions: See Section 016000 - Product Requirements.

2.06 CONCRETE MIX DESIGN

A. Proportioning Normal Weight Concrete: Comply with ACI PRC-211.1 recommendations.

B. Concrete Strength: Establish required average strength for concrete on the basis of field experience or trial mixtures, as specified in ACI 301.

C. Admixtures: Add acceptable admixtures as recommended in ACI PRC-211.1 and at rates recommended or required by manufacturer.

D. Normal Weight Concrete:
1. Compressive Strength, when tested in accordance with ASTM C39/C39M at 28 days: 4,000 pounds per square inch.
2. Water-Cement Ratio: Maximum 40 percent by weight.
3. Maximum Slump: 4 inches +/- 1 inc
4. Maximum Aggregate Size: 5/8 inch.

2.07 MIXING

A. On Project Site: Mix in drum type batch mixer, complying with ASTM C685/C685M. Mix each batch not less than 1-1/2 minutes and not more than 5 minutes.

B. Transit Mixers: Comply with ASTM C94/C94M.

C. Adding Water: If concrete arrives on-site with slump less than suitable for placement, do not add water that exceeds the maximum water-cement ratio or exceeds the maximum permissible slump.

PART 3 EXECUTION

3.01 EXAMINATION

A. Verify lines, levels, and dimensions before proceeding with Work of this section.

B. Verify requirements for concrete cover over reinforcement

C. Verify anchors, seats, plates, reinforcement and other items to be cast into concrete are accurately placed, positioned securely, and will not interfere with placing concrete.

D. Commencement of Work shall indicate acceptance of existing conditions.

3.02 PREPARATION

A. Where new concrete is to be bonded to previously placed concrete, prepare existing surface by cleaning and applying bonding agent in according to bonding agent manufacturer's instructions.
   1. Use epoxy bonding system for bonding to damp surfaces, for structural load-bearing applications, and where curing under humid conditions is required.
   2. Use latex bonding agent only for non-load-bearing applications.

B. Interior Slabs on Grade: Install vapor retarder under interior slabs on grade. Comply with ASTM E1643. Lap joints minimum 6 inches. Seal joints, seams and penetrations watertight with manufacturer's recommended products and follow manufacturer's written instructions. Repair damaged vapor retarder before covering.
   1. Granular Fill Over Vapor Retarder: Cover vapor retarder with compactible granular fill as indicated on drawings. Do not use sand.

3.03 PLACING CONCRETE

A. Place concrete in accordance with ACI PRC-304.

B. Notify Architect not less than 24 hours prior to commencement of placement operations.

C. Maintain records of concrete placement. Record date, location, quantity, air temperature, and test samples taken.

D. Ensure reinforcement will not be disturbed during concrete placement.

E. Place concrete continuously without construction (cold) joints wherever possible; where construction joints are necessary, before next placement prepare joint surface by removing laitance and exposing the sand and sound surface mortar, by sandblasting or high-pressure water jetting.

3.04 SLAB JOINTING

A. Locate joints as indicated on drawings.

B. Anchor joint fillers and devices to prevent movement during concrete placement.

C. Isolation Joints: Use preformed joint filler with removable top section for joint sealant, total height equal to thickness of slab, set flush with top of slab.
   1. Install wherever necessary to separate slab from other building members, including columns, walls, equipment foundations, footings, stairs, manholes, sumps, and drains.

D. Saw Cut Contraction Joints: Saw cut joints before concrete begins to cool, within 4 to 12 hours after placing; use 3/16 inch thick blade and cut at least 1 inch deep but not less than one quarter (1/4) the depth of the slab.
   1. Saw cut contraction joints in locations as indicated on the drawings.

E. Apply sealants in joints in accordance with Section 07 9005.

3.05 FLOOR FLATNESS AND LEVELNESS TOLERANCES

A. An independent testing agency, as specified in Section 014000, will inspect finished slabs for compliance with specified tolerances.

B. Maximum Variation of Surface Flatness:
   1. Exposed Concrete Floors: 1/8 inch in 10 feet.
   2. Under Seamless Resilient Flooring: 1/8 inch in 10 feet.
   3. Under Carpeting: 1/8 inch in 10 feet.
   4. Tennis Courts: 1/8 inch in 10 feet

C. Correct the slab surface if tolerances are less than specified.

D. Correct defects by grinding or by removal and replacement of the defective work. Areas requiring corrective work will be identified. Re-measure corrected areas by the same process.

3.06 CONCRETE FINISHING

A. Repair surface defects, including tie holes, immediately after removing formwork and as directed by the Architect.

B. Exposed Form Finish: Rub down or chip off and smooth fins or other raised areas 1/4 inch or more in height. Provide finish as follows:
   1. Smooth Rubbed Finish: Wet concrete and rub with carborundum brick or other abrasive, not more than 24 hours after form removal.
   2. Grout Cleaned Finish: Wet areas to be cleaned and apply grout mixture by trowel, brush or spray; scrub immediately to remove excess grout. After drying, rub vigorously with clean burlap, and keep moist for 36 hours.

C. Concrete Slabs: Finish to requirements of ACI PRC-302.1 and as follows:
   1. Surfaces to Receive Thick Floor Coverings: "Wood float" as described in ACI PRC-302.1; thick floor coverings include quarry tile, ceramic tile, and Portland cement terrazzo with full bed setting system.
   2. Surfaces to Receive Thin Floor Coverings: "Steel trowel" as described in ACI PRC-302.1; thin floor coverings include carpeting, resilient flooring, seamless flooring, resinous matrix terrazzo, thin set quarry tile, and thin set ceramic tile.
   3. Decorative Exposed Surfaces: Trowel as described in ACI PRC-302.1; take measures necessary to avoid black-burnish marks; decorative exposed surfaces include surfaces to be stained or dyed, pigmented concrete, surfaces to receive liquid hardeners, surfaces to receive dry-shake hardeners, surfaces to be polished, and all other exposed slab surfaces.

D. In areas with floor drains, maintain floor elevation at walls; pitch surfaces uniformly to drains as indicated on drawings.

3.07 CURING AND PROTECTION

A. Comply with requirements of ACI PRC-308. Immediately after placement, protect concrete from premature drying, excessively hot or cold temperatures, and mechanical injury.

B. Maintain concrete with minimal moisture loss at relatively constant temperature for period necessary for hydration of cement and hardening of concrete.
   1. Normal concrete: Not less than seven days.
   2. High early strength concrete: Not less than four days.

3.08 FIELD QUALITY CONTROL

A. An independent testing agency will perform field quality control tests, as specified in Section 014000 - Quality Requirements.

B. Provide free access to concrete operations at project site and cooperate with appointed firm.

C. Submit proposed mix design of each class of concrete to inspection and testing firm for review prior to commencement of concrete operations.

D. Tests of concrete and concrete materials may be performed at any time to ensure compliance with specified requirements.

E. Compressive Strength Tests: ASTM C39/C39M, for each test, mold and cure three concrete test cylinders. Obtain test samples for every 50 cubic yards of each class of concrete placed.

F. Take one additional test cylinder during cold weather concreting, cured on job site under same conditions as concrete it represents.

G. Perform one slump test for each set of test cylinders taken, following procedures of ASTM C143/C143M.

3.09 DEFECTIVE CONCRETE

A. Test Results: The testing agency shall report test results in writing to Architect and Contractor within 24 hours of test.

B. Defective Concrete: Concrete not complying with required lines, details, dimensions, tolerances or specified requirements.

C. Repair or replacement of defective concrete will be determined by the Architect. The cost of additional testing shall be borne by Contractor when defective concrete is identified.

D. Do not patch, fill, touch-up, repair, or replace exposed concrete except upon express direction of Architect for each individual area.

3.10 SCHEDULE - CONCRETE TYPES AND FINISHES

END OF SECTION

SECTION 040100
MAINTENANCE OF MASONRY

PART 1 GENERAL

1.01 SECTION INCLUDES

A. Steam, Detergent, Chemical, High Pressure Steam and Chemical, and Water cleaning of exterior/interior surfaces.

B. Replacement of masonry units.

C. Blast cleaning of exterior/interior surfaces.

D. Repointing mortar joints.

E. Repair of damaged masonry.

F. Retrofitting masonry veneer construction with brick ties and weeps.

1.02 RELATED REQUIREMENTS

A. Section 040511 - Masonry Mortaring and Grouting.

B. Section 042000 - Unit Masonry: Brick masonry units.

C. Section 042000 - Unit Masonry: Mortar and grout.

D. Section 044200 - Exterior Stone Cladding.

1.03 REFERENCE STANDARDS

A. ACI SPEC-548.14 - Repairing Concrete with Epoxy Mortar—Specification.

B. TMS 402/602 - Building Code Requirements and Specification for Masonry Structures.

1.04 SUBMITTALS

A. See Section 013000 - Administrative Requirements, for submittal procedures.

B. Shop Drawings: Indicate setting details of stone. Detail shoring.

C. Samples: Submit four samples of decorative block, face brick, stone, and prefaced block units to illustrate matching color, texture and extremes of color range.

D. Manufacturer's Instructions: For cleaning materials, indicate special procedures, conditions requiring special attention.

E. CFRP Field Quality Control Submittals: _____.

F. CFRP designer's qualification statement.

G. CFRP manufacturer's qualification statement.

H. CFRP installer's qualification statement.

1.05 QUALITY ASSURANCE - MASONRY WORK

A. Comply with provisions of TMS 402/602, except where exceeded by requirements of Contract Documents.
   1. Maintain one copy of each document on project site.

B. Restorer: Company specializing in masonry restoration with minimum three years of documented experience.

1.06 QUALITY ASSURANCE - CFRP WORK

A. Quality Control Plan: For installation and curing of CFRP materials, including personnel safety, installer certification, application and inspection of CFRP system, location and placement of splices, curing provisions, means to assure dry surfaces, quality assurance samples, and cleanup.

B. Designer Qualifications: Perform design under direct supervision of Professional Engineer experienced in design of this type of work and licensed in the State in which the Project is located.

C. Manufacturer Qualifications: Company specializing in manufacturing products specified in this section, with at least three years of documented experience.

D. Installer Qualifications: Company specializing in performing work of the type specified and with at least three years of documented experience.

1.07 MOCK-UPS

A. Restore and repoint an existing masonry wall area sized 8 feet long by 6 feet high; include in mock-up area instances of mortar, accessories, wall openings, and flashings.

B. Clean a 10 ft by 10 ft panel of wall to determine extent of cleaning.
   1. Repeat, using different cleaning methods for up to three different panels.

C. Locate where directed.

D. Acceptable panel and procedures employed will become the standard for work of this section.

E. Acceptable mock-up may remain as part of the Work.

1.08 DELIVERY, STORAGE, AND HANDLING

A. Deliver masonry neatly stacked and tied on pallets. Store clear of ground with adequate waterproof covering.

B. Store blast medium, acid solution, and restoration cleaner materials in manufacturer's packaging.

C. Deliver polymer resin materials in original factory-sealed containers with manufacturer's labels intact and legible with verification of product nomenclature, manufacturer's name, product identification and batch number, date of manufacture, and shelf life or expiration date. Do not use polymer resin materials that have exceeded shelf life.

D. Store materials in covered, well-ventilated area protected from exposure to detrimental conditions, including airborne contaminants, dirt, dust, sunlight, temperatures lower than 40 degrees F or greater than 100 degrees F, rainfall, sparks, or flame, and in accordance with the manufacturer's requirements. Store polymer resins and hardeners in separate area from construction materials that can absorb odors.

1.09 FIELD CONDITIONS - MASONRY WORK

A. Cold and Hot Weather Requirements: Comply with requirements of TMS 402/602 or applicable building code, whichever is more stringent.

B. Do not blast clean or use process creating dust, dirt, _____ , when wind is over 10 mph.

1.10 FIELD CONDITIONS - CFRP WORK

A. Maintain materials and surrounding air temperature to minimum 55 degrees F prior to, during, and 48 hours after completion of CFRP work.

B. Maintain materials and surrounding air temperature to maximum 100 degrees F prior to, during, and 48 hours after completion of CFRP work.

C. Do not apply primers, saturating resins, and adhesives to cold or frozen surfaces.

D. Do not use supplemental sources of heat to raise air or masonry surface temperature unless approved by the CFRP system manufacturer.

E. Do not apply resins and adhesives to damp or wet surfaces unless they have been formulated for such applications.

F. Provide temporary protection from direct contact by rain, dust and dirt, excessive sunlight, and high humidity during installation and until resins have cured.

1.11 WARRANTY

A. See Section 017800 - Closeout Submittals for additional warranty requirements.

B. Warranty: Provide 5-year warranty for CFRP system design, installation, bond to the substrate, and interlaminar bond, as well as mechanical property retention and fabric-resin compatibility, commencing on Date of Substantial Completion. Complete forms in Owner's name and register with warrantor.

PART 2 PRODUCTS

2.01 MANUFACTURERS

A. Restoration and Cleaning Chemicals:
   1. Diedrich Technologies, Inc: www.diedrichtechnologies.com.
   2. HMK Stone Care System: www.hmkstonecare.com.
   3. PROSOCO: www.prosoco.com.

2.02 CLEANING MATERIALS

A. Cleaning Agent: Detergent, Solvent cleaner, and Acid solution type.

B. Cleaning Agent: 0.5 lb of _____ mixture to one gallon of water.

C. Acid Solution: Clean, stain free, commercial hydrochloric (muriatic) acid, mixed one part to 10 parts of potable water.

D. Blasting Medium: _____.

2.03 RETROFIT ACCESSORIES

A. Manufacturers:
   1. Masonry Technology, Inc; Retrofit Weep: www.mtidry.com/#sle.
   2. Substitutions: See Section 016000 - Product Requirements.

B. Description:
   1. Retrofit Wall Ties: Type 304 stainless steel, 3/8 inch high by 7 inches long, designed for retrofit installation in rainscreen applications, anchored to stud framing with fasteners and in mortar joint with anchoring epoxy from interior.
   2. Retrofit Weeps: Polyethylene, 3/8 inch diameter by depth of brick, anchored in drilled hole in mortar joint with two-part epoxy bonding agent.

2.04 MORTAR MATERIALS

A. Comply with requirements of Section 040511.

2.05 MASONRY MATERIALS

A. Brick: Section 042000.

B. Stone Veneer: Section 044200.

C. Clay Tile: Section 042000.

D. Block: Section 042000.

PART 3 EXECUTION

3.01 EXAMINATION

A. Verify that surfaces to be cleaned are ready for work of this section.

B. Verify that masonry surfaces to receive CFRP are as dry as recommended by CFRP system manufacturer. Evaluate moisture content in accordance with ACI SPEC-548.14.

3.02 PREPARATION

A. Protect surrounding elements from damage due to restoration procedures.

B. Carefully remove and store removable items located in areas to be restored, including fixtures, fittings, finish hardware, and accessories; reinstall upon completion.

C. Separate areas to be protected from restoration areas using means adequate to prevent damage.

D. Cover existing landscaping with tarpaulins or similar covers.

E. Mask immediately adjacent surfaces with material that will withstand cleaning and restoration procedures.

F. Close off adjacent occupied areas with dust proof and weatherproof partitions.

G. Protect roof membrane and flashings from damage with 1/2 inch plywood laid on roof surfaces over full extent of work area and traffic route.

H. When using cleaning methods that involve water or other liquids, install drainage devices to prevent runoff over adjacent surfaces unless those surfaces are impervious to damage from runoff.

I. Do not allow cleaning runoff to drain into sanitary or storm sewers.

3.03 PREPARATION - RETROFIT ACCESSORIES

A. Demolition:
   1. See Section 024100 - Demolition for additional requirements.

B. Removal:

C. Replacement:

3.04 INSTALLATION - RETROFIT ACCESSORIES

3.05 REBUILDING

A. Cut out damaged and deteriorated masonry with care in a manner to prevent damage to any adjacent remaining materials.

B. Support structure as necessary in advance of cutting out units.

C. Cut away loose or unsound adjoining masonry, mortar, and stone as directed.

D. Build in new matching units following procedures for new work specified in other section(s).

E. Mortar Mix: Colored and proportioned to match existing work.

F. Ensure that anchors, ties, reinforcing, stone cramps and dowels, and flashings are correctly located and built in.

G. Install built in masonry and stone work to match and align with existing, with joints and coursing true and level, faces plumb and in line. Build in all openings, accessories and fittings.

3.06 REPOINTING

A. Perform repointing prior to cleaning masonry surfaces.

B. Cut out loose or disintegrated mortar in joints to minimum 1/2 inch depth or until sound mortar is reached.

C. Use power tools only after test cuts determine no damage to masonry units will result.

D. Do not damage masonry units.

E. When cutting is complete, remove dust and loose material by brushing.

F. Premoisten joint and apply mortar. Pack tightly in maximum 1/4 inch layers. Form a smooth, compact same type of joint to match existing.

G. Moist cure for 72 hours.

3.07 CLEANING EXISTING MASONRY

A. High Pressure Steam Cleaning: Apply ____ psi pressure to masonry surfaces at _____ locations, maintaining uniform depth and surface texture throughout.

B. Cleaning Detergent: Brush clean masonry surfaces at _____ locations with cleaning agent in accordance with the manufacturer's instructions. Saturate masonry with clean water and flush loose mortar and dirt.

C. Chemical and High Pressure Steam Cleaning: _____ psi pressure, ____ percent _____ chemical solution for brick masonry surfaces at all locations to remove existing paint coating and leave surface with uniform, natural color and texture.

D. Blast Cleaning: Blast clean with compressed air at ____ pressure, against _____ surfaces at all locations with _____ type cleaning agent in accordance with the manufacturer's instructions.

E. High Pressure Cold Water: Cold water blast with ____ psi pressure to brick masonry surfaces, at all locations, providing uniform finish.

3.08 CLEANING NEW MASONRY

A. Verify mortar is fully set and cured.

B. Clean surfaces and remove large particles with wood scrapers, brass or nylon wire brushes.

C. Protect area below cleaning operation and keep masonry soaked with water and flushed free of acid and dissolved mortar continuously for duration of cleaning.

D. Before solution dries, rinse and remove acid solution and dissolved mortar, using clean, pressurized water.

3.09 RESTORATION CLEANING

A. Clean surfaces and remove large particles with wood scrapers or non-ferrous wire brush.

B. Spray or Brush coat masonry with restoration cleaner, mixed into solution in accordance with manufacturer's instructions.

C. Provide a second application if required to match mock-up area.

D. Allow sufficient time for solution to remain on masonry and agitate with soft fiber brush or sponge.

E. Rinse from the bottom up with potable water applied at 400 psi and at a rate of 4 gal/min.

3.10 AGING

A. Rub in new masonry work to match, as close as possible, adjacent original work.
   1. Use carbon black in small amounts, rubbing in well with medium bristle brush.

B. After each application, dust off surplus and wash down with low pressure hose. Allow surface to dry before proceeding with succeeding applications.

C. Continue process until acceptance.

3.11 CLEANING

A. Immediately remove stains, efflorescence, or other excess resulting from the work of this section.

B. Remove excess mortar, smears, and droppings as work proceeds and upon completion.

C. Clean surrounding surfaces and grounds.

END OF SECTION

This page intentionally left blank

SECTION 040511
MASONRY MORTARING AND GROUTING

PART 1 GENERAL

1.01 SECTION INCLUDES

A. Mortar for masonry.

B. Grout for masonry.

1.02 RELATED REQUIREMENTS

A. Section 040100 - Maintenance of Masonry: Bedding and pointing mortar for masonry restoration work.

B. Section 042000 - Unit Masonry: Installation of mortar and grout.

1.03 REFERENCE STANDARDS

A. ASTM C91/C91M - Standard Specification for Masonry Cement.

B. ASTM C94/C94M - Standard Specification for Ready-Mixed Concrete.

C. ASTM C144 - Standard Specification for Aggregate for Masonry Mortar.

D. ASTM C207 - Standard Specification for Hydrated Lime for Masonry Purposes.

E. ASTM C270 - Standard Specification for Mortar for Unit Masonry.

F. ASTM C404 - Standard Specification for Aggregates for Masonry Grout.

G. ASTM C476 - Standard Specification for Grout for Masonry.

H. ASTM C780 - Standard Test Methods for Preconstruction and Construction Evaluation of Mortars for Plain and Reinforced Unit Masonry.

I. ASTM C979/C979M - Standard Specification for Pigments for Integrally Colored Concrete.

J. ASTM C1019 - Standard Test Method for Sampling and Testing Grout for Masonry.

K. ASTM C1072 - Standard Test Methods for Measurement of Masonry Flexural Bond Strength.

L. ASTM C1314 - Standard Test Method for Compressive Strength of Masonry Prisms.

M. ASTM C1714/C1714M - Standard Specification for Preblended Dry Mortar Mix for Unit Masonry.

N. ASTM E518/E518M - Standard Test Methods for Flexural Bond Strength of Masonry.

O. TMS 402/602 - Building Code Requirements and Specification for Masonry Structures.

1.04 SUBMITTALS

A. See Section 013000 - Administrative Requirements, for submittal procedures.

B. Product Data: Include design mix and indicate whether the Proportion or Property specification of ASTM C270 is to be used. Also include required environmental conditions and admixture limitations.

C. Samples: Submit two samples of mortar, illustrating mortar color and color range. Matching existing adjoining construction is the goal. Resubmit as directed to achieve this goal.

D. Manufacturer's Certificate: Certify that products meet or exceed specified requirements.

1.05 QUALITY ASSURANCE

A. Comply with provisions of TMS 402/602, except where exceeded by requirements of Contract Documents.
   1. Maintain one copy of each document on project site.

1.06 DELIVERY, STORAGE, AND HANDLING

A. Maintain packaged materials clean, dry, and protected against dampness, freezing, and foreign matter.

1.07 FIELD CONDITIONS

A. Cold and Hot Weather Requirements: Comply with requirements of TMS 402/602 or applicable building code, whichever is more stringent.

PART 2 PRODUCTS

2.01 MATERIALS

A. Packaged Dry Material for Mortar for Unit Masonry: Premixed Portland cement, hydrated lime, and sand; complying with ASTM C1714/C1714M and capable of producing mortar of the specified strength in accordance with ASTM C270 with the addition of water only.
   1. Type: Types as scheduled in this section.
   2. Color: Mineral pigments added as required to produce approved color sample.

B. Packaged Dry Material for Grout for Masonry: Premixed cementitious materials and dried aggregates; capable of producing grout of the specified strength in accordance with ASTM C476 with the addition of water only.

C. Portland Cement: ASTM C150/C150M.
   1. Type: Type I - Normal; ASTM C150/C150M.
   2. Color: Color as required to produce approved color sample.

D. Hydrated Lime: ASTM C207, Type SA.

E. Mortar Aggregate: ASTM C144.

F. Grout Aggregate: ASTM C404.

G. Pigments for Colored Mortar: Pure, concentrated mineral pigments specifically intended for mixing into mortar and complying with ASTM C979/C979M.
   1. Color(s): To match Architect's sample(s) when incorporated into specified mix design(s).
   2. Manufacturers:
      a. Davis Colors: www.daviscolors.com.
      b. Lambert Corporation: www.lambertusa.com.
      c. Substitutions: See Section 016000 - Product Requirements.

H. Water: Clean and potable.

2.02 MORTAR MIXING

A. Thoroughly mix mortar ingredients using mechanical batch mixer, in accordance with ASTM C270 and in quantities needed for immediate use.

B. Maintain sand uniformly damp immediately before the mixing process.

C. Colored Mortar: Proportion selected pigments and other ingredients to match Architect's sample, without exceeding manufacturer's recommended pigment-to-cement ratio; mix in accordance with manufacturer's instructions, uniform in coloration.

D. Do not use anti-freeze compounds to lower the freezing point of mortar.

E. If water is lost by evaporation, re-temper only within two hours of mixing.

2.03 GROUT MIXING

A. Mix grout in accordance with ASTM C94/C94M.

B. Thoroughly mix grout ingredients in quantities needed for immediate use in accordance with ASTM C476 for fine and coarse grout.

C. Do not use anti-freeze compounds to lower the freezing point of grout.

2.04 PRECONSTRUCTION TESTING

A. Grout Mixes: Test grout batches in accordance with ASTM C1019 procedures.

PART 3 EXECUTION

3.01 PREPARATION

A. Plug clean-out holes for grouted masonry with brick masonry units. Brace masonry to resist wet grout pressure.

3.02 INSTALLATION

A. Install mortar and grout to requirements of section(s) in which masonry is specified.

B. Do not install grout in lifts greater than 16 inches without consolidating grout by rodding.

3.03 GROUTING

A. Use either high-lift or low-lift grouting techniques, at Contractor's option, subject to other limitations of Contract Documents.

B. Low-Lift Grouting:
   1. Limit height of pours to 12 inches.
   2. Limit height of masonry to 16 inches above each pour.
   3. Pour grout only after vertical reinforcing is in place; place horizontal reinforcing as grout is poured. Prevent displacement of bars as grout is poured.
   4. Place grout for each pour continuously and consolidate immediately; do not interrupt pours for more than 1-1/2 hours.

C. High-Lift Grouting:
   1. Verify that horizontal and vertical reinforcement is in proper position and adequately secured before beginning pours.
   2. Brick: Limit pours to maximum 12 feet in height and 25 feet horizontally.
   3. Hollow Masonry: Limit lifts to maximum 4 feet and pours to maximum height of 24 feet.
   4. Place grout for spanning elements in single, continuous pour.

3.04 FIELD QUALITY CONTROL

A. An independent testing agency will perform field tests, in accordance with provisions of Section 014000 - Quality Requirements.

B. Test and evaluate mortar in accordance with ASTM C780 procedures.
   1. Test with same frequency as specified for masonry units.

C. Test and evaluate grout in accordance with ASTM C1019 procedures.
   1. Test with same frequency as specified for masonry units.

D. Prism Tests: Test masonry and mortar panels for compressive strength in accordance with ASTM C1314, and for flexural bond strength in accordance with ASTM C1072 or ASTM E518/E518M; perform tests and evaluate results as specified in individual masonry sections.

END OF SECTION

This page intentionally left blank

SECTION 042000
UNIT MASONRY

PART 1 GENERAL

1.01 SECTION INCLUDES

A. Concrete block.

B. Concrete building brick.

C. Mortar and Grout.

D. Accessories.

1.02 RELATED REQUIREMENTS

A. Section 040511 - Masonry Mortaring and Grouting.

B. Section 079200 - Joint Sealants: Sealing control and expansion joints.

1.03 REFERENCE STANDARDS

A. ASTM A153/A153M - Standard Specification for Zinc Coating (Hot-Dip) on Iron and Steel Hardware.

B. ASTM A951/A951M - Standard Specification for Steel Wire for Masonry Joint Reinforcement.

C. ASTM A1064/A1064M - Standard Specification for Carbon-Steel Wire and Welded Wire Reinforcement, Plain and Deformed, for Concrete.

D. BIA Technical Notes No. 13 - Ceramic Glazed Brick Exterior Walls.

E. TMS 402/602 - Building Code Requirements and Specification for Masonry Structures.

1.04 SUBMITTALS

A. See Section 013000 - Administrative Requirements for submittal procedures.

B. Product Data: Provide data for masonry units, fabricated wire reinforcement, and masonry accessories.

C. Shop Drawings: Indicate pertinent dimensions, materials, anchorage, size and type of fasteners, and accessories for brickwork support system.

D. Manufacturer's Certificate: Certify that masonry units meet or exceed specified requirements.

1.05 QUALITY ASSURANCE

A. Comply with provisions of TMS 402/602, except where exceeded by requirements of Contract Documents.

B. Manufacturer Qualifications: Company specializing in manufacturing the type of products specified in this section with minimum three years of documented experience.

C. Installer Qualifications: Company specializing in performing work of the type specified and with at least three years of documented experience.

1.06 DELIVERY, STORAGE, AND HANDLING

A. Deliver, handle, and store masonry units by means that will prevent mechanical damage and contamination by other materials.

PART 2 PRODUCTS

2.01 CONCRETE MASONRY UNITS

A. Concrete Block: Comply with referenced standards and as follows:
   1. Size: Standard units with nominal face dimensions of 16 by 8 inches and nominal depths as indicated on drawings for specific locations.

2.02 MORTAR AND GROUT MATERIALS

A. Mortar and Grout: As specified in Section 040511.

2.03 REINFORCEMENT AND ANCHORAGE

A. Reinforcing steel shall have a galvanized finish with no less than 10% surface rust.

B. Manufacturers:
   1. Blok-Lok Limited: www.blok-lok.com.
   2. Dur-O- Wall: www.dur-O -wal.com
   3. Hohmann & Barnard, Inc; X-Seal Anchor: www.h-b.com/#sle.
   4. WIRE-BOND: www.wirebond.com/#sle.
   5. Substitutions: See Section 016000 - Product Requirements.

C. Joint Reinforcement: Use ladder type joint reinforcement where vertical reinforcement is involved and truss type elsewhere, unless otherwise indicated.

D. Adjustable Multiple Wythe Joint Reinforcement: ASTM A951/A951M.
   1. Type: Truss, with adjustable ties or tabs spaced at 16 in on center.
   2. Material: ASTM A1064/A1064M steel wire, hot dip galvanized after fabrication to ASTM A153/A153M Class B.
   3. Size: 0.1875 inch side rods with 0.1483 inch cross rods and adjustable components of 0.1875 inchwire, width of components as required to provide not less than 5/8 inch of mortar coverage from each masonry face.
   4. Vertical adjustment: Not more than 1 1/4 inches.
   5. Seismic Feature: Provide lip, hook, or clip on extended leg of wall ties to engage or enclose not less than one continuous horizontal joint reinforcement wire of 0.1483 inch diameter.

2.04 ACCESSORIES

A. Preformed Control Joints: Rubber material. Provide with corner and tee accessories, fused joints.
   1. Manufacturers:
      a. Blok-Lok Limited: www.blok-lok.com.
      b. Dur-O-Wal: www.dur-O-wal.com
      c. Hohmann & Barnard, Inc: www.h-b.com/sle.
      d. WIRE-BOND: www.wirebond.com/#sle.
      e. Substitutions: See Section 016000 - Product Requirements.

B. Joint Filler: Closed cell polyvinyl chloride; oversized 50 percent to joint width; self expanding; in maximum lengths available.
   1. Manufacturers:
      a. Hohmann & Barnard, Inc: www.h-b.com/sle.
      b. WIRE-BOND: www.wirebond.com/#sle.
      c. Substitutions: See Section 016000 - Product Requirements.

C. Weeps Type: Cotton rope.

D. Cavity Vents Type: Polyester mesh.

E. Cleaning Solution: Non-acidic, not harmful to masonry work or adjacent materials.

PART 3 EXECUTION

3.01 EXAMINATION

A. Verify that field conditions are acceptable and are ready to receive masonry.

B. Verify that related items provided under other sections are properly sized and located.

C. Verify that built-in items are in proper location, and ready for roughing into masonry work.

3.02 PREPARATION

A. Direct and coordinate placement of metal anchors supplied for installation under other sections.

B. Provide temporary bracing during installation of masonry work. Maintain in place until building structure provides permanent bracing.

3.03 COURSING

A. Establish lines, levels, and coursing indicated. Protect from displacement.

B. Maintain masonry courses to uniform dimension. Form vertical and horizontal joints of uniform thickness.

C. Concrete Masonry Units:
   1. Bond: Running.
   2. Coursing: One unit and one mortar joint to equal 8 inches.
   3. Mortar Joints: Concave.

3.04 PLACING AND BONDING

A. Buttering corners of joints or excessive furrowing of mortar joints is not permitted.

B. Remove excess mortar and mortar smears as work progresses.

C. Interlock intersections and external corners, except for units laid in stack bond.

D. Do not shift or tap masonry units after mortar has achieved initial set. Where adjustment must be made, remove mortar and replace.

E. Perform job site cutting of masonry units with proper tools to provide straight, clean, unchipped edges. Prevent broken masonry unit corners or edges.

F. Cut mortar joints flush where wall tile is scheduled or resilient base is scheduled.

G. Isolate masonry partitions from vertical structural framing members with a control joint as indicated.

H. Isolate top joint of masonry partitions from horizontal structural framing members and slabs or decks with compressible joint filler.

3.05 WEEPS/CAVITY VENTS

A. Install weeps in veneer and cavity walls at 24 inches on center horizontally on top of through-wall flashing above shelf angles and lintels and at bottom of walls.

B. Install cavity vents in veneer and cavity walls at 32 inches on center horizontally below shelf angles and lintels and near top of walls.

3.06 GROUTED COMPONENTS

A. Reinforce bond beams with 2, No. 3 bars, 1 inch from bottom web.

B. Lap splices minimum 24 bar diameters.

C. At bearing locations, fill masonry cores with grout for a minimum 12 inches either side of opening.

3.07 CONTROL AND EXPANSION JOINTS

A. Do not continue horizontal joint reinforcement through control or expansion joints.

B. Install preformed control joint device in continuous lengths. Seal butt and corner joints in accordance with manufacturer's instructions.

C. Size control joints as indicated on drawings; if not indicated, 3/4 inch wide and deep.

3.08 BUILT-IN WORK

A. As work progresses, install built-in metal door frames, glazed frames, fabricated metal frames, window frames, wood nailing strips, anchor bolts, and plates and other items to be built into the work and furnished under other sections.

B. Install built-in items plumb, level, and true to line.

C. Do not build into masonry construction organic materials that are subject to deterioration.

3.09 TOLERANCES

A. Maximum Variation from Alignment of Columns: 1/4 inch.

B. Maximum Variation From Unit to Adjacent Unit: 1/16 inch.

C. Maximum Variation from Plane of Wall: 1/4 inch in 10 ft and 1/2 inch in 20 ft or more.

D. Maximum Variation from Plumb: 1/4 inch per story non-cumulative; 1/2 inch in two stories or more.

E. Maximum Variation from Level Coursing: 1/8 inch in 3 ft and 1/4 inch in 10 ft; 1/2 inch in 30 ft.

F. Maximum Variation of Mortar Joint Thickness: Head joint, minus 1/4 inch, plus 3/8 inch.

G. Maximum Variation from Cross Sectional Thickness of Walls: 1/4 inch.

3.10 CUTTING AND FITTING

A. Cut and fit for chases. Coordinate with other sections of work to provide correct size, shape, and location.

B. Obtain approval prior to cutting or fitting masonry work not indicated or where appearance or strength of masonry work may be impaired.

3.11 FIELD QUALITY CONTROL

A. An independent testing agency will perform field quality control tests, as specified in Section 014000 - Quality Requirements.

3.12 CLEANING

A. Remove excess mortar and mortar droppings.

B. Replace defective mortar. Match adjacent work.

C. Clean soiled surfaces with cleaning solution.

D. Use non-metallic tools in cleaning operations.

3.13 PROTECTION

A. Without damaging completed work, provide protective boards at exposed external corners that are subject to damage by construction activities.

END OF SECTION

SECTION 055213
PIPE AND TUBE RAILINGS

PART 1 GENERAL

1.01 SECTION INCLUDES

A. Wall mounted handrails.

B. Stair railings and guardrails.

C. Free-standing railings at steps.

D. Shop Finishing: Shop Prime Painting

1.02 RELATED REQUIREMENTS

1.03 REFERENCE STANDARDS

A. AAMA 611 - Specification for Anodized Architectural Aluminum.

B. AISC 207 - Standard for Certification Programs.

C. ASTM B241/B241M - Standard Specification for Aluminum and Aluminum-Alloy Seamless Pipe and Seamless Extruded Tube.

D. ASTM B429/B429M - Standard Specification for Aluminum-Alloy Extruded Structural Pipe and Tube.

E. ASTM B483/B483M - Standard Specification for Aluminum and Aluminum-Alloy Drawn Tube and Drawn Pipe for General Purpose Applications.

F. ASTM E985 - Standard Specification for Permanent Metal Railing Systems and Rails for Buildings.

G. IAS AC172 - Accreditation Criteria for Fabricator Inspection Programs for Structural Steel AC172.

1.04 SUBMITTALS

A. See Section 013000 - Administrative Requirements, for submittal procedures.

B. Shop Drawings: Indicate profiles, sizes, connection attachments, anchorage, size and type of fasteners, and accessories.

1.05 QUALITY ASSURANCE

A. Structural Designer Qualifications: Professional Structural Engineer experienced in design of this work and licensed in the State in which the Project is located, or personnel under direct supervision of such an engineer.

B. Fabricator Qualifications:
   1. A qualified steel fabricator that is certified by the American Institute for Steel Construction (AISC) under AISC 207.
   2. A qualified steel fabricator that is accredited by the International Accreditation Service (IAS) Fabricator Inspection Program for Structural Steel in accordance with IAS AC172.
   3. A company specializing in manufacturing products specified in this section, with not less than ten years of documented experience.

PART 2 PRODUCTS

2.01 RAILINGS - GENERAL REQUIREMENTS

A. Design, fabricate, and test railing assemblies in accordance with the most stringent requirements of applicable local code.

B. Design Criteria: Design and fabricate railings and anchorage to resist the following loads without failure, damage, or permanent set; loads do not need to applied simultaneously.
   1. Lateral Force: 85 lb minimum, at any point, when tested in accordance with ASTM E935.

2. Distributed Load; 50lb/ft minimum, applied in any direction at the top of the handrail, when tested in accordance with ASTM E935.
3. Concentrated Loads on Intermediate Rails: 50 psf, minimum.
4. Concentrated Load: 200 lbs minimum, applied in any direction at any point along the rail system, when tested in accordance with ASTM E935.
5. Handrails: Comply with applicable accessibility requirements of ADA Standards.

C. Allow for expansion and contraction of members and building movement without damage to connections or members.

D. Dimensions: See drawings for configurations and heights.
1. Top Rails and Wall Rails: 1-1/2 inches diameter, round.
2. Intermediate Rails: 1-1/2 inches diameter, round.
3. Posts: 1-1/2 inches diameter, round.
4. Balusters: 1/2 inch round solid bar.

E. Provide anchors and other components as required to attach to structure, made of same materials as railing components unless otherwise indicated; where exposed fasteners are unavoidable provide flush countersunk fasteners.

F. Provide welding fittings to join lengths, seal open ends, and conceal exposed mounting bolts and nuts, including but not limited to elbows, T-shapes, splice connectors, flanges, escutcheons, and wall brackets.

2.02 ALUMINUM MATERIALS

A. Aluminum Pipe: Schedule 40; ASTM B429/B429M, ASTM B241/B241M, or ASTM B483/B483M.

B. Welding Fittings: No exposed fasteners; cast aluminum.

2.03 FABRICATION

A. Accurately form components to suit specific project conditions and for proper connection to building structure.

B. Fit and shop assemble components in largest practical sizes for delivery to site.

C. Fabricate components with joints tightly fitted and secured. Provide spigots and sleeves to accommodate site assembly and installation.

D. Welded Joints:
1. Exterior Components: Continuously seal joined pieces by intermittent welds and plastic filler. Drill condensate drainage holes at bottom of members at locations that will not encourage water intrusion.
2. Interior Components: Continuously seal joined pieces by intermittent welds and plastic filler.
3. Grind exposed joints flush and smooth with adjacent finish surface. Make exposed joints butt tight, flush, and hairline. Ease exposed edges to small uniform radius.

E. Provide returns at ends of handrails. Close ends of returns.

F. Brackets, Flanges, Fittings, and Anchors: Provide wall brackets, flanges, miscellaneous fittings, and anchors to interconnect railing members to other work unless otherwise indicated.
1. At brackets and fittings fastened to plaster or gypsum board: provide crush-resistant fillers or other means to transfer loads through wall finishes to structural supports and prevent bracket or fitting rotation and crushing of substrate.

G. Provide inserts and other anchorage devices for connecting railings to concrete or masonry work. Fabricate anchorage devices capable of withstanding loads imposed by railings. Coordinate anchorage devices with supporting structure.

2.04 SHOP FINISHNG

A. Remove tool and die marks and stretch lines, or blend into finish.

B. Shop Prime Painting: Use specified shop and touch up primer.
   1. Preparation of Steel: In accordance with SSPC-SP 6/NACE No.3, "Commercial Blast Cleaning."
   2. Number of coats: One

2.05 ALUMINUM FINISHES

A. Class I Natural Anodized Finish: AAMA 611 AA-M12C22A41 Clear anodic coating not less than 0.7 mils thick.

PART 3 EXECUTION

3.01 EXAMINATION

A. Verify that field conditions are acceptable and are ready to receive work.

3.02 PREPARATION

A. Clean and strip primed steel items to bare metal where site welding is required.

B. Apply one coat of bituminous paint to concealed aluminum surfaces that will be in contact with cementitious or dissimilar materials.

3.03 INSTALLATION

A. Install in accordance with manufacturer's instructions.

B. Install components plumb and level, accurately fitted, free from distortion or defects, with tight joints.

C. Anchor railings securely to structure.

3.04 TOLERANCES

A. Maximum Variation From Plumb: 1/4 inch per floor level, non-cumulative.

B. Maximum Offset From True Alignment: 1/4 inch.

C. Maximum Out-of-Position: 1/4 inch.

3.05 PROTECTION

A. Protect finishes of railings from damage during construction period with temporary protective coverings approved by railing manufacturer.

END OF SECTION

This page intentionally left blank

SECTION 060573
WOOD TREATMENT

PART 1 GENERAL

1.01 SECTION INCLUDES

A. Field-applied termiticide for wood materials.

1.02 SUBMITTALS

A. See Section 013000 - Administrative Requirements for submittal procedures.

B. Product Data: Provide technical data for insulated sheathing, wood preservative materials, and application instructions.

C. Warranty: Submit manufacturer warranty and ensure that forms have been completed in Owner's name and registered with manufacturer.

1.03 DELIVERY, STORAGE, AND HANDLING

A. General: Cover wood products to protect against moisture. Support stacked products to prevent deformation and to allow air circulation.

B. Fire Retardant Treated Wood: Prevent exposure to precipitation during shipping, storage, and installation.

1.04 WARRANTY

A. See Section 017800 - Closeout Submittals for additional warranty requirements.

B. Site Applied Termiticide and Mildewcide: Correct defective work within a twenty-five year period after Date of Substantial Completion.

C. Provide five year manufacturer warranty for labor.

PART 2 PRODUCTS

2.01 FIELD-APPLIED WOOD TREATMENT

A. Field-Applied Termiticide for Wood: Borate mineral salt based, spray applied, penetrating termiticide.

PART 3 EXECUTION

3.01 PREPARATION

A. Remove dust, dirt and other contaminants from treatment surfaces. Remove tarpaulins, dropcloths, strippable protective films, etc., from areas to be treated. Move equipment and stored materials that block or prevent product application.

3.02 INSTALLATION - GENERAL

A. Provide temporary ventilation during and immediately after installation sufficient to remove indoor air contaminants.

3.03 FIELD-APPLIED WOOD TREATMENT

A. Comply with manufacturer's written mixing and application instructions.

B. Termiticide: Apply to foundations, structure, and other items indicated and as follows:
   1. Structural wood and sill plates within 24 inches, minimum, of point of contact with foundation.
   2. Wood, wood-based, and cellulosic sheathing within 24 inches, minimum, of point of contact with foundation.
   3. Concrete foundations 2 inches, minimum, from sill plate.
   4. Pipe and plumbing penetrations up to 24 inches, minimum, above slab and slab surface and within 6 inches, minimum, of pipe or penetration.

END OF SECTION

This page intentionally left blank

SECTION 061000
ROUGH CARPENTRY

PART 1 GENERAL

1.01 SECTION INCLUDES

A. Rough opening framing for doors, windows, and roof openings.

B. Roof-mounted curbs.

C. Roofing nailers.

D. Preservative treated wood materials.

E. Fire retardant treated wood materials.

F. Miscellaneous framing and sheathing.

G. Communications and electrical room mounting boards.

H. Concealed wood blocking, nailers, and supports.

I. Miscellaneous wood nailers, furring, and grounds.

1.02 RELATED REQUIREMENTS

A. Section 076200 - Sheet Metal Flashing and Trim: Sill flashings.

1.03 REFERENCE STANDARDS

A. ASTM A153/A153M - Standard Specification for Zinc Coating (Hot-Dip) on Iron and Steel Hardware.

B. ASTM E84 - Standard Test Method for Surface Burning Characteristics of Building Materials.

C. AWPA U1 - Use Category System: User Specification for Treated Wood.

D. PS 20 - American Softwood Lumber Standard.

1.04 SUBMITTALS

A. See Section 013000 - Administrative Requirements for submittal procedures.

B. Product Data: Provide technical data on insulated sheathing, wood preservative materials, and application instructions.

C. ABAA Field Quality Control Submittals: Submit third-party reports of testing and inspection required by ABAA QAP.

D. Manufacturer's Certificate: Certify that wood products supplied for rough carpentry meet or exceed specified requirements.

E. ABAA Manufacturer Qualification: Submit documentation of current evaluation of proposed manufacturer and materials.

F. ABAA Installer Qualification: Submit documentation of current contractor accreditation and current installer certification. Keep copies of all contractor accreditation and installer certification on site during and after installation. Present on-site documentation upon request.

1.05 QUALITY ASSURANCE

A. Air Barrier Association of America (ABAA) Quality Assurance Program (QAP); www.airbarrier.org/#sle:

1. Installer Qualification: Use accredited contractor, certified installers, evaluated materials, and third-party field quality control audit.
2. Manufacturer Qualification: Use evaluated materials from a single manufacturer regularly engaged in air barrier material manufacture. Use secondary materials approved in writing by primary material manufacturer.

1.06 DELIVERY, STORAGE, AND HANDLING

A. General: Cover wood products to protect against moisture. Support stacked products to prevent deformation and to allow air circulation.

B. Fire Retardant Treated Wood: Prevent exposure to precipitation during shipping, storage, and installation.

1.07 WARRANTY

A. See Section 017800 - Closeout Submittals for additional warranty requirements.

PART 2 PRODUCTS

2.01 GENERAL REQUIREMENTS

A. Dimension Lumber: Comply with PS 20 and requirements of specified grading agencies.
   1. If no species is specified, provide species graded by the agency specified; if no grading agency is specified, provide lumber graded by grading agency meeting the specified requirements.
   2. Grading Agency: Grading agency whose rules are approved by the Board of Review, American Lumber Standard Committee at www.alsc.org, and who provides grading service for the species and grade specified; provide lumber stamped with grade mark unless otherwise indicated.
   3. Lumber of other species or grades is acceptable provided structural and appearance characteristics are equivalent to or better than products specified.

2.02 DIMENSION LUMBER FOR CONCEALED APPLICATIONS

A. Sizes: Nominal sizes as indicated on drawings, S4S.

B. Moisture Content: S-dry or MC19.

C. Miscellaneous Framing, Blocking, Nailers, Grounds, and Furring:
   1. Lumber: S4S, No. 2 or Standard Grade.
   2. Boards: Standard or No. 3.

2.03 ACCESSORIES

A. Fasteners and Anchors:
   1. Metal and Finish: Hot-dipped galvanized steel complying with ASTM A153/A153M for high humidity and preservative-treated wood locations, unfinished steel elsewhere.

B. Sill Gasket on Top of Foundation Wall: 1/4 inch thick, plate width, closed cell plastic foam from continuous rolls.

C. Sill Flashing: See Section 076200.

2.04 FACTORY WOOD TREATMENT

A. Treated Lumber and Plywood: Comply with requirements of AWPA U1 - Use Category System for wood treatments determined by use categories, expected service conditions, and specific applications.
   1. Fire-Retardant Treated Wood: Mark each piece of wood with producer's stamp indicating compliance with specified requirements.
   2. Preservative-Treated Wood: Provide lumber and plywood marked or stamped by an ALSC-accredited testing agency, certifying level and type of treatment in accordance with AWPA standards.

B. Fire Retardant Treatment:
   1. Products:
      a. Substitutions: See Section 016000 - Product Requirements.
   2. Interior Type A: AWPA U1, Use Category UCFA, Commodity Specification H, low temperature (low hygroscopic) type, chemically treated and pressure impregnated; capable of providing a maximum flame spread index of 25 when tested in accordance with

ASTM E84, with no evidence of significant combustion when test is extended for an additional 20 minutes.

a. Kiln dry wood after treatment to a maximum moisture content of 19 percent for lumber and 15 percent for plywood.
b. Treat rough carpentry items as indicated .
c. Do not use treated wood in applications exposed to weather or where the wood may become wet.

C. Preservative Treatment:
1. Preservative Pressure Treatment of Lumber Above Grade: AWPA U1, Use Category UC3B, Commodity Specification A using waterborne preservative.
a. Kiln dry lumber after treatment to maximum moisture content of 19 percent.
b. Treat lumber in contact with roofing, flashing, or waterproofing.

PART 3 EXECUTION

3.01 PREPARATION

A. Where wood framing bears on cementitious foundations, install full width sill flashing continuous over top of foundation, lap ends of flashing minimum of 4 inches and seal.

B. Install sill gasket under sill plate of framed walls bearing on foundations; puncture gasket cleanly to fit tightly around protruding anchor bolts.

C. Coordinate installation of rough carpentry members specified in other sections.

3.02 INSTALLATION - GENERAL

A. Select material sizes to minimize waste.

B. Reuse scrap to the greatest extent possible; clearly separate scrap for use on site as accessory components, including: shims, bracing, and blocking.

C. Where treated wood is used on interior, provide temporary ventilation during and immediately after installation sufficient to remove indoor air contaminants.

3.03 BLOCKING, NAILERS, AND SUPPORTS

A. Provide framing and blocking members as indicated or as required to support finishes, fixtures, specialty items, and trim.

B. In framed assemblies that have concealed spaces, provide solid wood fireblocking as required by applicable local code, to close concealed draft openings between floors and between top story and roof/attic space; other material acceptable to authorities having jurisdiction may be used in lieu of solid wood blocking.

C. In metal stud walls, provide continuous blocking around door and window openings for anchorage of frames, securely attached to stud framing.

D. In walls, provide blocking attached to studs as backing and support for wall-mounted items, unless item can be securely fastened to two or more studs or other method of support is explicitly indicated.

E. Where ceiling-mounting is indicated, provide blocking and supplementary supports above ceiling, unless other method of support is explicitly indicated.

F. Provide the following specific nonstructural framing and blocking:
1. Cabinets and shelf supports.
2. Wall brackets.
3. Handrails.
4. Grab bars.
5. Towel and bath accessories.
6. Wall-mounted door stops.
7. Tackboards and marker boards.
8. Wall paneling and trim.

9. Joints of rigid wall coverings that occur between studs.
10. Fire Extinguishers.
11. Door hold open hardware.
12. Shelving
13. Smart Boards and monitor
14. Mirrors. Continuous blocking for mirror support channels.
15. toilet room accessories
16. Mop rails
17. Wood shelving and related rails.
18. Any object hanging off the wall that weighs 10 pounds or more.

3.04 ROOF-RELATED CARPENTRY

A. Coordinate installation of roofing carpentry with deck construction, framing of roof openings, and roofing assembly installation.

B. Provide wood curb at each roof opening except where specifically indicated otherwise; form corners by alternating lapping side members.

C. Provide separation and no direct contact of aluminum flashings and preservative pressure treated roof blocking to avoid potential corrosion using roofing membrane or roofing felts.

3.05 TOLERANCES

A. Framing Members: 1/4 inch from true position, maximum.

B. Variation from Plane, Other than Floors: 1/4 inch in 10 feet maximum, and 1/4 inch in 30 feet maximum.

3.06 CLEANING

A. Waste Disposal: See Section 017419 - Construction Waste Management and Disposal.
   1. Comply with applicable regulations.
   2. Do not burn scrap on project site.
   3. Do not burn scraps that have been pressure treated.
   4. Do not send materials treated with pentachlorophenol, CCA, or ACA to co-generation facilities or “waste-to-energy” facilities.

B. Do not leave wood, shavings, sawdust, etc. on the ground or buried in fill.

C. Prevent sawdust and wood shavings from entering the storm drainage system.

END OF SECTION

SECTION 062000
FINISH CARPENTRY

PART 1 GENERAL

1.01 SECTION INCLUDES

A. Finish carpentry items.

1.02 RELATED REQUIREMENTS

A. Section 081416 - Flush Wood Doors.

1.03 REFERENCE STANDARDS

A. BHMA A156.9 - Cabinet Hardware.

B. NEMA LD 3 - High-Pressure Decorative Laminates.

1.04 ADMINISTRATIVE REQUIREMENTS

A. Coordinate the work with plumbing rough-in, electrical rough-in, and installation of associated and adjacent components.

B. Sequence installation to ensure utility connections are achieved in an orderly and expeditious manner.

1.05 SUBMITTALS

A. See Section 013000 - Administrative Requirements for submittal procedures.

B. Shop Drawings: Indicate materials, component profiles, fastening methods, jointing details, and accessories.
   1. Scale of Drawings: 1-1/2 inch to 1 foot, minimum.
   2. Include certification program label.

C. Samples: Submit two samples of finish plywood, ____x____ inch in size illustrating wood grain and specified finish.

D. Samples: Submit two samples of wood trim 4 inch long.

1.06 QUALITY ASSURANCE

A. Fabricator Qualifications: Company specializing in fabricating the products specified in this section with minimum five years of documented experience.
   1. Company with at least one project within the past 5 years with value of woodwork within 20 percent of cost of woodwork for this project.
   2. Accredited participant in the specified certification program prior to the commencement of fabrication and throughout the duration of the project.
   3. Single Source Responsibility: Provide and install this work from single fabricator.

1.07 DELIVERY, STORAGE, AND HANDLING

A. Protect from moisture damage.

PART 2 PRODUCTS

2.01 FINISH CARPENTRY ITEMS

A. Surface Burning Characteristics: Provide materials having fire and smoke properties as required by applicable code.

B. Interior Woodwork Items:

2.02 PLASTIC LAMINATE MATERIALS

A. Plastic Laminate: NEMA LD 3, HGS; color as selected by Architect; textured, low gloss finish.

B. Low Pressure Laminate: as indicated on the drawings; _____ color and gloss surface texture.

C. Laminate Backing Sheet: NEMA LD 3, BKL; undecorated plastic laminate.

D. Laminate Adhesive: Type recommended by laminate manufacturer to suit application; not containing formaldehyde or other volatile organic compounds.

2.03 FASTENINGS

A. Adhesive for Purposes Other Than Laminate Installation: Suitable for the purpose; not containing formaldehyde or other volatile organic compounds.

B. Fasteners: Of size and type to suit application; _____ finish in concealed locations and _____ finish in exposed locations.

C. Concealed Joint Fasteners: Threaded steel.

2.04 ACCESSORIES

A. Lumber for Shimming and Blocking: Softwood lumber of indicated species.

B. Plastic Edge Trim: Extruded convex shaped; smooth finish; self locking serrated tongue; of width to match component thickness; color as selected.

C. Wood Filler: Solvent base, tinted to match surface finish color.

2.05 HARDWARE

A. Hardware: Comply with BHMA A156.9.

2.06 FABRICATION

A. Shop assemble work for delivery to site, permitting passage through building openings.

B. Cap exposed plastic laminate finish edges with plastic trim.

C. When necessary to cut and fit on site, provide materials with ample allowance for cutting. Provide trim for scribing and site cutting.

D. Apply plastic laminate finish in full uninterrupted sheets consistent with manufactured sizes. Fit corners and joints hairline; secure with concealed fasteners. Slightly bevel arises. Locate counter butt joints minimum 2 feet from sink cut-outs.

E. Apply laminate backing sheet to reverse face of plastic laminate finished surfaces.

2.07 SHOP FINISHING

A. Sand work smooth and set exposed nails and screws.

B. Apply wood filler in exposed nail and screw indentations.

C. On items to receive transparent finishes, use wood filler that matches surrounding surfaces and is of type recommended for the applicable finish.

D. Prime paint surfaces in contact with cementitious materials.

E. Back prime woodwork items to be field finished, prior to installation.

PART 3 EXECUTION

3.01 EXAMINATION

A. Verify adequacy of backing and support framing.

B. Verify mechanical, electrical, and building items affecting work of this section are placed and ready to receive this work.

C. See Section 061000 for installation of recessed wood blocking.

3.02 INSTALLATION

A. Set and secure materials and components in place, plumb and level.

B. Carefully scribe work abutting other components, with maximum gaps of 1/32 inch. Do not use additional overlay trim to conceal larger gaps.

C. See Section 061000 for installation requirements for attachment accessories.

D. Install components with nails at 16 inch on center.

E. Install prefinished paneling with full bed contact adhesive applied to substrate.

F. Install hardware in accordance with manufacturer's written instructions.

3.03 PREPARATION FOR SITE FINISHING

A. Set exposed fasteners. Apply wood filler in exposed fastener indentations. Sand work smooth.

B. Before installation, prime paint surfaces of items or assemblies to be in contact with cementitious materials.

END OF SECTION

This page intentionally left blank

SECTION 064100
ARCHITECTURAL WOOD CASEWORK

PART 1 GENERAL

1.01 SECTION INCLUDES

A. Specially fabricated cabinet units.

B. Countertops.

C. Hardware.

1.02 RELATED REQUIREMENTS

A. Section 061000 - Rough Carpentry: Support framing, grounds, and concealed blocking.

1.03 REFERENCE STANDARDS

A. AWI/AWMAC/WI (AWS) - Architectural Woodwork Standards, 2nd Edition.

B. AWI/AWMAC/WI (AWS) - Architectural Woodwork Standards, 2nd Edition.

C. AWMAC/WI (NAAWS) - North American Architectural Woodwork Standards.

D. NEMA LD 3 - High-Pressure Decorative Laminates.

1.04 SUBMITTALS

A. See Section 013000 - Administrative Requirements for submittal procedures.

B. Shop Drawings: Indicate materials, component profiles, fastening methods, jointing details, and accessories.
   1. Scale of Drawings: 1-1/2 inch to 1 foot, minimum.
   2. Provide information as required by AWI/AWMAC/WI (AWS) or AWMAC/WI (NAAWS).
   3. Include certification program label.

C. Product Data: Provide data for hardware accessories.

D. Samples: Submit actual samples of architectural cabinet construction, minimum 12 inches square, illustrating proposed cabinet, countertop, and shelf unit substrate and finish.

E. Certificate: Manufacturer's certification that all plys of plywood are Baltic Birch.

1.05 QUALITY ASSURANCE

A. Fabricator Qualifications: Company specializing in fabricating the products specified in this section with minimum five years of documented experience.

1.06 DELIVERY, STORAGE, AND HANDLING

A. Protect units from moisture damage.

1.07 FIELD CONDITIONS

A. During and after installation of custom cabinets, maintain temperature and humidity conditions in building spaces at same levels planned for occupancy.

PART 2 PRODUCTS

2.01 MANUFACTURERS

A. Substitutions: See Section 016000 - Product Requirements.

B. Single Source Responsibility: Provide and install this work from single fabricator.

2.02 CABINETS

A. Quality Standard: Premium Grade, in accordance with AWI/AWMAC/WI (AWS) or AWMAC/WI (NAAWS), unless noted otherwise.

B. Plastic Laminate Faced Cabinets: Custom grade, plywood substrate, and as specified herein.
   1. Storage, custodial closet, and utility room cabinets shall be Custom grade, plywood substrate, and as specified herein.

C. Cabinetsat locations shown on drawings:
   1. Finish - Exposed Exterior Surfaces: Decorative laminate.
   2. Finish - Exposed Interior Surfaces: Decorative laminate.
   3. Finish - Semi-Exposed Interior Surfaces: Decorative laminate.
   4. Finish - Concealed Surfaces: Decorative laminate.
   5. Door and Drawer Front Edge Profiles: Square edge with plastic edge band.
   6. Casework Construction Type: Type A - Frameless.
   7. Interface Style for Cabinet and Door: Style 1 - Overlay; flush overlay.
   8. Adjustable Shelf Loading: 40 psf.
      a. Deflection: L/144.
   9. Cabinet Style: Flush overlay.
   10. Cabinet Doors and Drawer Fronts: Flush style.
   11. Drawer Side Construction: Manufacturer's option from one of the following:
      a. Multiple-dovetailed.
      b. Doweled.
      c. Biscuit-joined.
      d. Lock-jointed and nailed.
   12. Drawer Bottom Construction: Rabbeted and glued all four edges.

2.03 WOOD-BASED COMPONENTS

A. Wood fabricated from old growth timber is not permitted.

B. Plywood:
   1. Species: Baltic Birch, all plys.
      a. Provide certification from manufacturer that all plys are Baltic Birch.
   2. Thickness: As required for structural stability minimum thickness 19 mm (approximately 3/4 inch), minimum 9-ply.
      a. Drawer bottoms to be a minimum thickness of 7 mm (approximately 1/4 inch) trapped in groove on 4 sides, minimum 9 ply.
      b. Backs are to be a minimum thickness of 7 mm (approximately 1/4 inch) trapped in groove on 4 sides, minimum 9 ply. Provide 3-1/2" x 3/4" heavy duty mounting rails on 4 sides.
   3. Grade: BB/BB or better.

2.04 LAMINATE MATERIALS

A. Manufacturers:
   1. Formica Corporation: www.formica.com/#sle.
   2. Panolam Industries International, Inc; Nevamar: www.nevamar.com.
   3. Pionite; : www.pionite.com
   4. Wilsonart: www.wilsonart.com.
   5. Arborite: www.arborite.com
   6. Substitutions: See Section 016000 - Product Requirements.

B. High Pressure Decorative Laminate (HPDL): NEMA LD 3, types as recommended for specific applications.

C. Provide specific types as described in AWS as follows:
   1. Exposed Exterior Horizontal Surfaces: HGS, 0.048 inch nominal thickness, colors and patterns as selected by the architect from manufacturer's full range of colors and patterns.
   2. Exposed Exterior Vertical Surfaces: VGS, 0.028 inch nominal thickness, colors and patterns as selected by the architect from manufacturer's full range of colors and patterns.
   3. Semi-Exposed Interior Horizontal Surfaces: HGL, 0.039 inch nominal thickness, colors and patterns as selected by the architect from manufacturer's full range of colors and patterns.
   4. Semi-Exposed Interior Vertical Surfaces: VGL, 0.020 inch nominal thickness, color as selected, finish as selected.

5. Concealed Surfaces: BKL, 0.020 inch nominal thickness, undecorated; for application to concealed backside of panels faced with high pressure decorative laminate.

D. Colors: To be no more than 3 colors or patterns per room, with a maximum of 9 colors or patterns for the project.

2.05 COUNTERTOPS

A. Plastic Laminate Countertops: Plywood substrate covered with HPDL, AWS Type 2C, except with plastic edge band instead of self edge and with butt splash.
   1. Exposed Exterior Horizontal Surfaces: HGS, 0.048 inch nominal thickness, through color, color as selected, finish as selected.

B. Plastic Laminate Splashes: Plywood covered with HPDL, AWS Type 1, horizontal butt with plastic edge band at all exposed edges.
   1. Exposed Exterior Vertical Surfaces: HGS, 0.048 inch nominal thickness or VGS, 0.028 inch nominal thickness at manufacturer option, color as selected, finish as selected.

2.06 ACCESSORIES

A. Adhesive: Type recommended by fabricator to suit application.

B. Plastic Edge Banding: Extruded PVC, flat shaped; smooth finish; 3 mm thickness; applied with hot adhesive; of width to match component thickness, tee-molding is not acceptable.
   1. Color: As selected by Architect from manufacturer's full range.
   2. Use at all exposed plywood edges.
   3. Use at all exposed shelf edges.
   4. Use at all exposed countertop edges.
   5. Use at all exposed splash edges.

C. Fasteners: Size and type to suit application.

D. Bolts, Nuts, Washers, Lags, Pins, and Screws: Of size and type to suit application; chrome-plated finish in concealed locations and stainless steel or chrome-plated finish in exposed locations.

E. Concealed Joint Fasteners: Threaded steel.

F. Grommets: Standard plastic grommets for cut-outs, in color to blend with adjacent surface.

G. Filler Strips: Filler strips shall match casework construction in material and color, maximum width 3 inches.

H. Joint Sealers: Acrylic colored caulk intended for use on plastic laminate joints.
   1. Color: As selected by Architect from manufacturer's standard range.

2.07 HARDWARE

A. Hardware: BHMA A156.9, as recommended by fabricator for quality grade specified.

B. Cabinet Unit Adjustable Shelf Supports: Standard side-mounted system using recessed metal shelf standards and coordinated self rests, satin chrome finish, for nominal 1 inch spacing adjustments.

C. Adjustable Shelving Shelf Supports: Standard back-mounted system using surface mounted metal shelf standards and coordinated cantilevered shelf brackets, satin chrome finish, for nominal 1 inch spacing adjustments.

D. Drawer and Door Pulls: "U" shaped wire pull, steel with satin finish, 4 inch centers "U" shaped wire pull, steel with satin finish, 4 inch centers.

E. Cabinet Catches and Latches:

F. Drawer Slides:
   1. Type: Full extension.
   2. Static Load Capacity: Commercial grade.
   3. Mounting: Side mounted.

4. Stops: Integral type.
5. Features: Provide self closing/stay closed, ball bearing, and ball bearing type.
6. Manufacturers:
    a. Accuride International, Inc; Light-Duty Drawer Slides: www.accuride.com/#sle.
    b. Hettich America, LP: www.hettich.com/sle.
    c. Knape & Vogt Manufacturing Company; Light-Duty Drawer Slides: www.knapeandvogt.com/#sle.
    d. Substitutions: Not permitted.

G. Hinges: European style concealed self-closing type,BHMA Grade 1, 3 dimensional adjustment, minimum 120 degree opening angle, steel with satin finish.
1. Manufacturers:
    a. Hardware Resources: www.hardwareresources.com/#sle.
    b. Hettich America, LP: www.hettich.com/sle.
    c. Julius Blum, Inc: www.blum.com. Commercial grade
    d. Substitutions: Not permitted.

H. Piano Hinges: Full height, located at intermediate hinge on all double-hinged corner base and wall cabinet doors.

2.08 FABRICATION

A. Corners created by all tall, wall, or base casework shall be usable space unless specifically indicated otherwise.

B. Base/Toe shall be constructed as an integral part of the cabinet body unless specifically indicated otherwise.

C. Drawer construction technique: Locked shoulder joints.

D. Assembly: Shop assemble cabinets for delivery to site in units easily handled and to permit passage through building openings.

E. Edging: Fit shelves, doors, and exposed edges with specified edging. Do not use more than one piece for any single length.

F. Fitting: When necessary to cut and fit on site, provide materials with ample allowance for cutting. Provide matching trim for scribing and site cutting.

G. Plastic Laminate: Apply plastic laminate finish in full uninterrupted sheets consistent with manufactured sizes. Fit corners and joints hairline; secure with concealed fasteners.
1. Apply laminate backing sheet to reverse side of plastic laminate finished surfaces.
2. Cap exposed plastic laminate finish edges with plastic edge banding plastic laminate self edge is not acceptable.

H. Mechanically fasten back splash to countertops with steel brackets at 16 inches on center.

PART 3 EXECUTION

3.01 EXAMINATION

A. Verify adequacy of backing and support framing.

B. Verify location and sizes of utility rough-in associated with work of this section.

C. Commencement of the Work shall indicate acceptance of existing conditions.

3.02 INSTALLATION

A. Set and secure custom cabinets in place, assuring that they are rigid, plumb, and level.

B. Use fixture attachments in concealed locations for wall mounted components.

C. Use concealed joint fasteners to align and secure adjoining cabinet units and countertops.

D. Carefully scribe casework abutting other components, with maximum gaps of 1/32 inch. Do not use additional overlay trim for this purpose.

E. Caulk continuously all splashes at butt joints and at wall intersections with joint sealer.

F. Caulk continuously all base cabinets, wall cabinets, and filler strips at wall and gypsum board ceiling intersections with joint sealer.

G. Secure cabinets to floor using appropriate angles and anchorages.

H. Mechanically fasten filler strips; friction fitting is not acceptable.

3.03 ADJUSTING

A. Adjust installed work.
   1. Adjust doors and drawer fronts to provide uniform gaps and plumb vertical edges.

B. Adjust moving or operating parts to function smoothly and correctly.

3.04 CLEANING

A. Clean casework, counters, shelves, hardware, fittings, and fixtures.

END OF SECTION

This page intentionally left blank

SECTION 066100
CAST POLYMER FABRICATIONS

PART 1 GENERAL

1.01 SECTION INCLUDES

A. Cast plastic window sills.

1.02 RELATED REQUIREMENTS

1.03 REFERENCE STANDARDS

A. ASTM E84 - Standard Test Method for Surface Burning Characteristics of Building Materials.

1.04 SUBMITTALS

A. See Section 013000 - Administrative Requirements, for submittal procedures.

B. Samples: Submit two samples representative of items specified, 4 x 4 inch in size, illustrating color, texture, and finish.

C. Executed warranty.

1.05 QUALITY ASSURANCE

A. Manufacturer Qualifications: Company specializing in manufacturing products specified in this section, with minimum three years of documented experience.

1.06 WARRANTY

A. See Section 017800 - Closeout Submittals for additional warranty requirements.

B. Provide five year manufacturer warranty for window sills

PART 2 PRODUCTS

2.01 MANUFACTURERS

A. Polymer Synthetic Stone Fabrications:
   1. Formica; Solid Surfacing; www.formica.com
   2. Wilsonart, LLC; Solid Surfacing; www.wilsonart.com
   3. LivingStone / US Surface Warehouse; www.livingstonesurfaces.com
   4. Dupont Corian; www.corian.com
   5. Substitutions: See Section 016000 - Product Requirements.

2.02 MATERIALS

A. Provide finished products having flame spread index of 35 and smoke developed index of 15, when tested in accordance with ASTM E84 in thickness of 3/4 inch.

B. Resin: Polyester type, with integral coloring, stain resistant to domestic chemicals and cleaners.

C. Polishing Cream: Compatible polishing cream to achieve specified sheen to gel coat.

D. Core Framing: Softwood lumber, clear and free of knots.

2.03 FINISH

A. Color: Architect to select from a full range of color .

B. Exposed to View Surface Visual Texture: Marbleized design.

PART 3 EXECUTION

3.01 EXAMINATION

A. Verify field measurements are as indicated on shop drawings.

B. Verify substrates are prepared to receive cast polymer fabrications.

C. Verify mechanical, electrical, and other building components affecting work of this section are placed and ready to receive work of this section.

3.02 PREPARATION

A. Prepare substrates in accordance with manufacturer's written instructions.

3.03 INSTALLATION

A. Install cast polymer units in accordance with manufacturer's written instructions.

3.04 TOLERANCES

A. Maximum Variation from True Position: 1/4 inch.

B. Maximum Variation from Level: 1/4 inch in 10 feet.

3.05 CLEANING

A. Clean exposed surfaces of installed units in accordance with manufacturer's instructions.

3.06 PROTECTION

A. Protect installed cast polymer units from subsequent construction operations.

END OF SECTION

SECTION 076200
SHEET METAL FLASHING AND TRIM

PART 1 GENERAL

1.01 SECTION INCLUDES

A. Fabricated sheet metal items, including flashings, counterflashings, exterior penetrations, and other items indicated in Schedule.

B. Sealants for joints within sheet metal fabrications.

1.02 RELATED REQUIREMENTS

1.03 REFERENCE STANDARDS

A. ASTM A653/A653M - Standard Specification for Steel Sheet, Zinc-Coated (Galvanized) or Zinc-Iron Alloy-Coated (Galvannealed) by the Hot-Dip Process.

B. ASTM C920 - Standard Specification for Elastomeric Joint Sealants.

C. ASTM D4586/D4586M - Standard Specification for Asphalt Roof Cement.

D. CDA A4050 - Copper in Architecture - Handbook.

E. SMACNA (ASMM) - Architectural Sheet Metal Manual.

1.04 SUBMITTALS

A. See Section 013000 - Administrative Requirements for submittal procedures.

B. Shop Drawings: Indicate material profile, jointing pattern, jointing details, fastening methods, flashings, terminations, and installation details.

1.05 QUALITY ASSURANCE

A. Perform work in accordance with SMACNA (ASMM) and CDA A4050 requirements and standard details, except as otherwise indicated.

B. Maintain one copy of each document on site.

C. Fabricator and Installer Qualifications: Company specializing in sheet metal work with three years of documented experience.

1.06 DELIVERY, STORAGE, AND HANDLING

A. Stack material to prevent twisting, bending, and abrasion, and to provide ventilation. Slope metal sheets to ensure drainage.

B. Prevent contact with materials that could cause discoloration or staining.

PART 2 PRODUCTS

2.01 SHEET MATERIALS

A. Galvanized Steel: ASTM A653/A653M, with G90/Z275 zinc coating; minimum 24-gauge, 0.0239-inch thick base metal.

2.02 FABRICATION

A. Form sections true to shape, accurate in size, square, and free from distortion or defects.

B. Fabricate cleats of same material as sheet, minimum 2 inches wide, interlocking with sheet.

C. Form pieces in longest possible lengths.

D. Hem exposed edges on underside 1/2 inch; miter and seam corners.

E. Form material with flat lock seams, except where otherwise indicated; at moving joints, use sealed lapped, bayonet-type or interlocking hooked seams.

F. Fabricate corners from one piece with minimum 18-inch long legs; seam for rigidity, seal with sealant.

G. Fabricate vertical faces with bottom edge formed outward 1/4 inch and hemmed to form drip.

H. Fabricate flashings to allow toe to extend 2 inches over roofing gravel. Return and brake edges.

2.03 ACCESSORIES

A. Primer Type: Zinc chromate.

B. Protective Backing Paint: Zinc molybdate alkyd.

C. Concealed Sealants: Non-curing butyl sealant.

D. Exposed Sealants: ASTM C920; elastomeric sealant, with minimum movement capability as recommended by manufacturer for substrates to be sealed; color to match adjacent material.

E. Asphalt Roof Cement: ASTM D4586/D4586M, Type I, asbestos-free.

PART 3 EXECUTION

3.01 EXAMINATION

A. Verify roof openings, curbs, pipes, sleeves, ducts, and vents through roof are solidly set, reglets in place, and nailing strips located.

B. Verify roofing termination and base flashings are in place, sealed, and secure.

3.02 PREPARATION

A. Install starter and edge strips, and cleats before starting installation.

B. Back paint concealed metal surfaces with protective backing paint to a minimum dry film thickness of 15 mil, 0.015 inch.

3.03 INSTALLATION

A. Insert flashings into reglets to form tight fit; secure in place with plastic wedges; pack remaining spaces with lead wool; seal flashings into reglets with sealant.

B. Secure flashings in place using concealed fasteners, and use exposed fasteners only where permitted..

C. Apply plastic cement compound between metal flashings and felt flashings.

D. Fit flashings tight in place; make corners square, surfaces true and straight in planes, and lines accurate to profiles.

E. Seal metal joints watertight.

F. Counterflash with reglets at masonry. Surface mounted termination bars are not acceptable.

3.04 FIELD QUALITY CONTROL

A. See Section 014000 - Quality Requirements for field inspection requirements.

B. Inspection will involve surveillance of work during installation to ascertain compliance with specified requirements.

END OF SECTION

SECTION 078400
FIRESTOPPING

PART 1 GENERAL

1.01 SECTION INCLUDES

A. Firestopping of all joints and penetrations in fire-resistance rated and smoke-resistant corridor or other rated assemblies, whether indicated on drawings or not, and other openings indicated.

1.02 REFERENCE STANDARDS

A. ASTM E2174 - Standard Practice for On-Site Inspection of Installed Firestop Systems.

B. ASTM E2393 - Standard Practice for On-Site Inspection of Installed Fire Resistive Joint Systems and Perimeter Fire Barriers.

C. ASTM G21 - Standard Practice for Determining Resistance of Synthetic Polymeric Materials to Fungi.

D. FM (AG) - FM Approval Guide.

E. ITS (DIR) - Directory of Listed Products.

F. UL (FRD) - Fire Resistance Directory.

G. See Section 013000 - Administrative Requirements for submittal procedures.

1.03 QUALITY ASSURANCE

A. Fire Testing: Provide firestopping assemblies of designs that provide the scheduled fire ratings when tested in accordance with methods indicated.
   1. Listing in UL (FRD), FM (AG), or ITS (DIR) will be considered as constituting an acceptable test report.
   2. Valid evaluation report published by ICC Evaluation Service, Inc. (ICC-ES) at www.icc-es.org will be considered as constituting an acceptable test report.
   3. Submission of actual test reports is required for assemblies for which none of the above substantiation exists.

1.04 FIELD CONDITIONS

A. Comply with firestopping manufacturer's recommendations for temperature and conditions during and after installation; maintain minimum temperature before, during, and for three days after installation of materials.

B. Provide ventilation in areas where solvent-cured materials are being installed.

PART 2 PRODUCTS

2.01 MANUFACTURERS

A. Firestopping Manufacturers:
   1. 3M Fire Protection Products: www.3m.com/firestop/#sle.
   2. A/D Fire Protection Systems Inc: www.adfire.com/#sle.
   3. Hilti, Inc: www.us.hilti.com/#sle.
   4. Nelson FireStop Products: www.nelsonfirestop.com/#sle.
   5. Specified Technologies Inc: www.stifirestop.com/#sle.
   6. Tremco Commercial Sealants & Waterproofing; TREMstop Acrylic: www.tremcosealants.com/#sle.

2.02 MATERIALS

A. Prohibited Materials: Do not use asbestos.

B. Mold and Mildew Resistance: Provide firestopping materials with mold and mildew resistance rating of zero(0) in accordance with ASTM G21.

C. Primers, Sleeves, Forms, Insulation, Packing, Stuffing, and Accessories: Provide type of materials as required for tested firestopping assembly.

D. Fire Ratings: Refer to drawings for required systems and ratings.

PART 3 EXECUTION

3.01 EXAMINATION

A. Verify openings are ready to receive the work of this section.

3.02 PREPARATION

A. Clean substrate surfaces of dirt, dust, grease, oil, loose material, or other materials that could adversely affect bond of firestopping material.

B. Remove incompatible materials that could adversely affect bond.

C. Install backing materials to prevent liquid material from leakage.

3.03 INSTALLATION

A. Install materials in manner described in fire test report and in accordance with manufacturer's instructions, completely closing openings.

B. Do not cover installed firestopping until inspected by authorities having jurisdiction.

C. Install labeling required by code.

3.04 FIELD QUALITY CONTROL

A. Independent Testing Agency: Inspection agency employed and paid by Owner, will examine penetration firestopping in accordance with ASTM E2174 and ASTM E2393.

B. Repair or replace penetration firestopping and joints at locations where inspection results indicate firestopping or joints do not meet specified requirements.

3.05 CLEANING

A. Clean adjacent surfaces of firestopping materials.

3.06 PROTECTION

A. Protect adjacent surfaces from damage by material installation.

END OF SECTION

SECTION 079200
JOINT SEALANTS

PART 1 GENERAL

1.01 SECTION INCLUDES

A. Nonsag gunnable joint sealants.

B. Self-leveling pourable joint sealants.

C. Joint backings and accessories.

1.02 RELATED REQUIREMENTS

A. Section 016116 - Volatile Organic Compound (VOC) Content Restrictions: Additional requirements for sealants and primers.

1.03 REFERENCE STANDARDS

A. ASTM C661 - Standard Test Method for Indentation Hardness of Elastomeric-Type Sealants by Means of a Durometer.

B. ASTM C794 - Standard Test Method for Adhesion-in-Peel of Elastomeric Joint Sealants.

C. ASTM C920 - Standard Specification for Elastomeric Joint Sealants.

D. ASTM C1087 - Standard Test Method for Determining Compatibility of Liquid-Applied Sealants with Accessories Used in Structural Glazing Systems.

E. ASTM C1193 - Standard Guide for Use of Joint Sealants.

F. SWRI (VAL) - SWR Institute Validated Products Directory.

1.04 SUBMITTALS

A. See Section 013000 - Administrative Requirements for submittal procedures.

B. Product Data: Submit manufacturer's technical datasheets for each product to be used; include the following:

1. Physical characteristics, including movement capability, VOC content, hardness, cure time, and color availability.
2. List of backing materials approved for use with the specific product.
3. Substrates that product is known to satisfactorily adhere to and with which it is compatible.
4. Substrates the product should not be used on.
5. Substrates for which use of primer is required.
6. Substrates for which laboratory adhesion and/or compatibility testing is required.
7. Installation instructions, including precautions, limitations, and recommended backing materials and tools.
8. Sample product warranty.
9. Certification by manufacturer indicating that product complies with specification requirements.
10. SWRI Validation: Provide currently available sealant product validations as listed by SWRI (VAL) for specified sealants.

C. Product Data for Accessory Products: Submit manufacturer's technical data sheet for each product to be used, including physical characteristics, installation instructions, and recommended tools.

D. Color Cards for Selection: Where sealant color is not specified, submit manufacturer's color cards showing standard colors available for selection.

E. Samples for Verification: Where custom sealant color is specified, obtain directions from Architect and submit at least two physical samples for verification of color of each required sealant.

F. Test Reports: For joint sealants and backing, provide independent laboratory reports and test results showing negative asbestos containing materials content using Polarized Light Microscopy (PLM) test method.

G. Manufacturer's qualification statement.

H. Installer's qualification statement.

I. Executed warranty.

1.05 QUALITY ASSURANCE

A. Maintain one copy of each referenced document covering installation requirements on site.

B. Manufacturer Qualifications: Company specializing in manufacturing the products specified in this section with minimum five years documented experience.

C. Installer Qualifications: Company specializing in performing the work of this section and with at least three years of documented experience.

D. Testing Agency Qualifications: Independent firm specializing in performing testing and inspections of the type specified in this section.

E. Preconstruction Laboratory Testing: Arrange for sealant manufacturer(s) to test each combination of sealant, substrate, backing, and accessories.
   1. Adhesion Testing: In accordance with ASTM C794.
   2. Compatibility Testing: In accordance with ASTM C1087.
   3. Allow sufficient time for testing to avoid delaying the work.
   4. Deliver sufficient samples to manufacturer for testing.
   5. Report manufacturer's recommended corrective measures, if any, including primers or techniques not indicated in product data submittals.

F. Field Quality Control Plan:
   1. Visual inspection of entire length of sealant joints.

1.06 WARRANTY

A. See Section 017800 - Closeout Submittals for additional warranty requirements.

B. Manufacturer Warranty: Provide 2-year manufacturer warranty for installed sealants and accessories that fail to achieve a watertight seal, exhibit loss of adhesion or cohesion, or do not cure. Complete forms in Owner's name and register with manufacturer.

C. Extended Correction Period: Correct defective work within 2-year period commencing on Date of Substantial Completion.

PART 2 PRODUCTS

2.01 MANUFACTURERS

A. Nonsag Sealants:
   1. Bostik Inc: www.bostik-us.com.
   2. Dow Chemical Company: consumer.dow.com/en-us/industry/ind-building-construction.html/#sle.
   3. Hilti, Inc: www.us.hilti.com/#sle.
   4. Pecora Corporation: www.pecora.com.
   5. Sherwin-Williams Company: www.sherwin-williams.com.
   6. Sika Corporation: www.usa-sika.com.
   7. W.R. Meadows, Inc: www.wrmeadows.com/sle.
   8. Substitutions: See Section 016000 - Product Requirements.

B. Self-Leveling Sealants:
   1. Bostik Inc: www.bostik-us.com.
   2. Dow Chemical Company: consumer.dow.com/en-us/industry/ind-building-construction.html/#sle.
   3. Pecora Corporation: www.pecora.com.

4. Sherwin-Williams Company: www.sherwin-williams.com.
5. Sika Corporation: www.usa-sika.com.
6. W.R. Meadows, Inc: www.wrmeadows.com/sle.
7. Substitutions: See Section 016000 - Product Requirements.

2.02 JOINT SEALANT APPLICATIONS

A. Scope:
   1. Exterior Joints: Seal open joints, whether or not the joint is indicated on drawings, unless specifically indicated not to be sealed. Exterior joints to be sealed include, but are not limited to:
      a. Wall expansion and control joints.
      b. Joints between door, window, and other frames and adjacent construction.
      c. Joints between different exposed materials.
      d. Openings below ledge angles in masonry.
      e. Other joints indicated below.
   2. Interior Joints: Do not seal interior joints unless specifically indicated to be sealed. Interior joints to be sealed include, but are not limited to, the following items.
      a. Joints between door, window, and other frames and adjacent construction.
      b. Other joints indicated below.
   3. Do not seal the following types of joints:
      a. Intentional weep holes in masonry.
      b. Joints indicated to be treated with manufactured expansion joint cover, or some other type of sealing device.
      c. Joints where sealant is specified to be provided by manufacturer of product to be sealed.
      d. Joints where installation of sealant is specified in another section.
      e. Joints between suspended panel ceilings/grid and walls.

B. Exterior Joints: Use nonsag polyurethane sealant, unless otherwise indicated.
   1. Control and Expansion Joints in Concrete Paving: Self-leveling polyurethane "traffic-grade" sealant.

C. Interior Joints: Use non-sag polyurethane sealant, unless otherwise indicated.
   1. Wall and Ceiling Joints in Wet Areas: Nonsag polyurethane sealant for continuous liquid immersion.
   2. Floor Joints in Wet Areas: Nonsag polyurethane non-traffic-grade sealant suitable for continuous liquid immersion.
   3. Joints between Fixtures in Wet Areas and Floors, Walls, and Ceilings: Mildew-resistant silicone sealant; white.

D. Interior Wet Areas: Bathrooms, restrooms, kitchens, food service areas, and pools and locker rooms; fixtures in wet areas include plumbing fixtures, food service equipment, countertops, cabinets, and other similar items.

2.03 JOINT SEALANTS - GENERAL

A. Sealants and Primers: Provide products with acceptable levels of volatile organic compound (VOC) content; see Section 016116.

2.04 NONSAG JOINT SEALANTS

A. Mildew-Resistant Silicone Sealant: ASTM C920, Grade NS, Uses M and A; single component, mildew resistant; not expected to withstand continuous water immersion or traffic.
   1. Color: White.

B. Polyurethane Sealant: ASTM C920, Grade NS, Uses M and A; single or multi-component; not expected to withstand continuous water immersion or traffic.
   1. Movement Capability: Plus 100 percent, minus 50 percent, minimum.
   2. Color: Match adjacent finished surfaces.

C. Polyurethane Sealant for Continuous Water Immersion: ASTM C920, Grade NS, Uses M and A; single or multicomponent; explicitly approved by manufacturer for continuous water immersion; suitable for traffic exposure when recessed below traffic surface.
   1. Movement Capability: Plus and minus 35 percent, minimum.
   2. Hardness Range: 20 to 35, Shore A, when tested in accordance with ASTM C661.
   3. Color: To be selected by Architect from manufacturer's full range.
   4. Service Temperature Range: Minus 40 to 180 degrees F.

2.05 SELF-LEVELING JOINT SEALANTS

A. Self-Leveling Polyurethane Sealant: ASTM C920, Grade P, Uses M and A; single or multi-component; explicitly approved by manufacturer for traffic exposure; not expected to withstand continuous water immersion .
   1. Movement Capability: Plus and minus 25 percent, minimum.
   2. Hardness Range: 35 to 55, Shore A, when tested in accordance with ASTM C661.
   3. Color: To be selected by Architect from manufacturer's standard range.
   4. Service Temperature Range: Minus 40 to 180 degrees F.

2.06 ACCESSORIES

A. Backer Rod: Cylindrical cellular foam rod with surface that sealant will not adhere to, compatible with specific sealant used, and recommended by backing and sealant manufacturers for specific application.

B. Backing Tape: Self-adhesive polyethylene tape with surface that sealant will not adhere to and recommended by tape and sealant manufacturers for specific application.

PART 3 EXECUTION

3.01 EXAMINATION

A. Verify that joints are ready to receive work.

B. Verify that backing materials are compatible with sealants.

C. Verify that backer rods are of the correct size.

D. Preinstallation Adhesion Testing: Install a sample for each test location indicated in the test plan.
   1. Test each sample as specified in PART 1 under QUALITY ASSURANCE article.
   2. Notify Architect of date and time that tests will be performed, at least seven days in advance.
   3. Record each test on Preinstallation Adhesion Test Log as indicated.
   4. If any sample fails, review products and installation procedures, consult manufacturer, or take other measures that are necessary to ensure adhesion; retest in a different location; if unable to obtain satisfactory adhesion, report to Architect.
   5. After completion of tests, remove remaining sample material and prepare joints for new sealant installation.

3.02 PREPARATION

A. Remove loose materials and foreign matter that could impair adhesion of sealant.

B. Clean joints, and prime as necessary, in accordance with manufacturer's instructions.

C. Perform preparation in accordance with manufacturer's instructions and ASTM C1193.

D. Mask elements and surfaces adjacent to joints from damage and disfigurement due to sealant work; be aware that sealant drips and smears may not be completely removable.

3.03 INSTALLATION

A. Install this work in accordance with sealant manufacturer's requirements for preparation of surfaces and material installation instructions.

B. Provide joint sealant installations complying with ASTM C1193.

C. Measure joint dimensions and size joint backers to achieve width-to-depth ratio, neck dimension, and surface bond area as recommended by manufacturer, except where specific dimensions are indicated.

D. Install bond breaker backing tape where backer rod cannot be used.

E. Install sealant free of air pockets, foreign embedded matter, ridges, and sags, and without getting sealant on adjacent surfaces.

F. Do not install sealant when ambient temperature is outside manufacturer's recommended temperature range, or will be outside that range during the entire curing period, unless manufacturer's approval is obtained and instructions are followed.

G. Nonsag Sealants: Tool surface concave, unless otherwise indicated; remove masking tape immediately after tooling sealant surface.

3.04 FIELD QUALITY CONTROL

A. See Section 014000 - Quality Requirements for additional requirements.

B. Perform field quality control inspection/testing as specified in PART 1 under QUALITY ASSURANCE article.

C. Remove and replace failed portions of sealants using same materials and procedures as indicated for original installation.

3.05 POST-OCCUPANCY

A. Post-Occupancy Inspection: Perform visual inspection of entire length of project sealant joints at a time that joints have opened to their greatest width, i.e., at low temperature in thermal cycle. Report failures immediately and repair them.

END OF SECTION

This page intentionally left blank

SECTION 079513
EXPANSION JOINT COVER ASSEMBLIES

PART 1 GENERAL

1.01 SECTION INCLUDES

A. Expansion joint cover assemblies for floor, wall, and ceiling surfaces.

1.02 RELATED REQUIREMENTS

1.03 REFERENCE STANDARDS

1.04 ADMINISTRATIVE REQUIREMENTS

A. Installation Templates: For frames and anchors to be embedded in concrete or masonry, furnish templates to relevant installers; include installation instructions and tolerances.

1.05 SUBMITTALS

A. See Section 013000 - Administrative Requirements for submittal procedures.

B. Product Data: Provide joint assembly profiles, profile dimensions, available colors and finish.

C. Shop Drawings: Indicate joint and splice locations, miters, layout of the work, affected adjacent construction and anchorage locations.

D. Samples: Submit two samples 4 inch long, illustrating profile, dimension, color, and finish selected.

PART 2 PRODUCTS

2.01 MANUFACTURERS

A. Expansion Joint Cover Assemblies:
   1. Architectural Art Mfg, Inc: www.archart.com/#sle.
   2. Construction Specialties, Inc: www.c-sgroup.com/#sle.
   3. EMSEAL Joint Systems, Ltd: www.emseal.com/#sle.
   4. Inpro: www.inprocorp.com/#sle.
   5. MM Systems Corp: www.mmsystemscorp.com/#sle.
   6. Nystrom, Inc: www.nystrom.com/#sle.

2.02 EXPANSION JOINT COVER ASSEMBLY APPLICATIONS

A. Interior Floor Joints Subject to Thermal Movement:
   1. Manufacturers:
      a. Balco, Inc; No-Bump Floor to Floor System, Aluminum (NBAF): www.balcousa.com/#sle.

B. Interior Wall/Ceiling Joints Subject to Thermal Movement:
   1. Manufacturers:

2.03 EXPANSION JOINT COVER ASSEMBLIES

A. Expansion Joint Cover Assemblies - General: Factory-fabricated and assembled; designed to completely fill joint openings, sealed to prevent passage of air, dust, water, smoke; suitable for traffic expected.
   1. Joint Dimensions and Configurations: As indicated on drawings.
   2. Joint Cover Sizes: Selected to suit joint width and configuration, based on manufacturer's published recommendations and limitations.
   3. Joint Cover Styles: As indicated on drawings.
   4. Lengths: Provide covers in full lengths required; avoid splicing wherever possible.
   5. Anchors, Fasteners, and Fittings: Provided by cover manufacturer.

B. Floor Joint Covers: Coordinate with indicated floor coverings.
   1. If floor covering is not indicated, obtain instructions from Architect before proceeding.

2. If style is not indicated, provide extruded aluminum frame both sides, resilient seals, and minimize exposed metal.

C. Sliding Cover Plate Type Covers: Provide plate with beveled edges and neat fit that does not collect dirt.

D. Covers in Gypsum Board Assemblies: Provide style with anchoring wings that can be completely covered by joint compound.

2.04 MATERIALS

A. Resilient Seals:
1. For Ceilings: Any resilient material, flush, pleated, or hollow gasket.
2. For Pedestrian Traffic Applications: EPDM rubber, Neoprene, or Santoprene; no PVC; Shore A hardness of 40 to 50 Durometer.
3. Color: Black.

B. Anchors and Fasteners: As recommended by cover manufacturer.

C. Ferrous Metal Anchors: Galvanized where embedded in concrete or in contact with cementitious materials.

D. Threaded Fasteners: Aluminum.

E. Backing Paint for Aluminum Components in Contact with Cementitious Materials: Asphaltic type.

PART 3 EXECUTION

3.01 EXAMINATION

A. Verify that joint preparation and dimensions are acceptable and in accordance with manufacturer's requirements.

B. Verify that frames and anchors installed by others are in correct locations and suitable for installation of remainder of assembly.

3.02 INSTALLATION

A. Install components and accessories in accordance with manufacturer's instructions.

B. Align work plumb and level, flush with adjacent surfaces.

C. Rigidly anchor to substrate to prevent misalignment.

3.03 PROTECTION

A. Do not permit traffic over unprotected floor joint surfaces.

B. Provide strippable coating to protect finish surface.

END OF SECTION

SECTION 080671
DOOR HARDWARE SCHEDULE

PART 1 GENERAL

1.01 SECTION INCLUDES

A. Preliminary schedule of door hardware sets for swinging, sliding, folding, and other door types as indicated on drawings.

1.02 RELATED REQUIREMENTS

A. Section 087100 - Door Hardware: Requirements to comply with in coordination with this section.

1.03 REFERENCE STANDARDS

A. BHMA (CPD) - Certified Products Directory.

B. BHMA A156.3 - Exit Devices.

C. BHMA A156.5 - Cylinders and Input Devices for Locks.

D. BHMA A156.13 - Mortise Locks and Latches.

E. BHMA A156.18 - Standard for Materials and Finishes.

F. DHI (H&S) - Sequence and Format for the Hardware Schedule.

1.04 PROJECT INFORMATION

A. Project Name: WEH Building Renovation and Site Improvements.
   1. Location: Various Locations District Wide

B. Architect: Bond Architects, Inc
   1. Phone Number: 314-863-4994

C. Contractor: To Be Determined.

1.05 SUBMITTALS

A. See Section 013000 - Administrative Requirements, for submittal procedures.

B. Comply with submittal requirements as indicated in Section 087100.

PART 2 PRODUCTS

2.01 MANUFACTURERS

A. Only manufacturers listed in Section 087100 are considered acceptable.

B. Obtain each type of door hardware as indicated from a single manufacturer and single supplier.

C. Products are listed and certified compliant with specified standards by BHMA (CPD).

D. Manufacturer's Abbreviations: Coordinate with manufacturers listed in Section 087100.
   1. BAS - Best Access Systems.
   2. HGR - Hager.
   3. HES - HES.
   4. IVE - Ives.
   5. LCN - LCN.
   6. McK - McKinney.
   7. NGP - National Guard Products.
   8. PEM - Pemko.
   9. RIX - Rixson.
   10. ROC - Rockwood.
   11. SA - Sargent.
   12. SCH - Schlage.
   13. VD - Von Duprin.

2.02 LOCK FUNCTION CODES

A. Function Codes for Cylindrical Locks: Complying with BHMA A156.5.

B. Function Codes for Mortise Locks: Complying with BHMA A156.13.

C. Function Codes for Exit Devices: Complying with BHMA A156.3.

2.03 FINISHES

A. Finishes: Complying with BHMA A156.18.

1. Code 626: Satin chromium plated over nickel, with brass or bronze base material (former US equivalent US26D).

PART 3 EXECUTION

3.01 DOOR HARDWARE SCHEDULE

A. Organize listing of door hardware components within each hardware set in compliance with 10-Part scheduling sequence indicated in DHI (H&S), unless otherwise indicated.

3.02 HARDWARE SET # 01.02: "EXTERIOR DOOR"

A. For use on Door Number(s): EXD-1601.

B. Provide for each Pair (PR) door(s).

UNITS	LOCK	ITEM	DESCRIPTION	FINISH	MFR
5	EA	HINGE, 4 1/2 STD WT	TA2714 4-1/2 X 4-1/2 NRP	26D	MCK
1	EA	ELECTRIC HINGE	TA2714 4-1/2 X 4-1/2 NRP X POE	26D	MCK
1	EA	MULLION	4954 X 7-2	SP28	VON
1	EA	EXIT DEVICE TRIM	70 IN220 231 BIPS B EK1 NJ	26D	SAR
1	EA	RIM EXIT DEVICE	LD-99EO X 299 X 3-0	US26D	VON
1	EA	RIM CYLINDER	12E-7-2-S2-RP X L/C	626	BES
1	EA	CLOSER	4040XP.SCUSH.689.TBSRT	689	LCN
1	EA	WEATHER STRIPPING	8780N-BK 8’ PSA	BK	ZER
1	EA	DRIP CAP	810S X 76	MIL	HAG
1	EA	WIRING HARNESS	POE-C1500P		MCK
1	EA	WIRING HARNESS	POE-C306P		MCK
1	EA	WIRING HARNESS	POE-C306PRJ		MCK
1	EA	MISCELLANEOUS	MG16-2C	2C	
					MCK

3.03 HARDWARE SET # 1.23: "EXTERIOR"

A. For use on Door Number(s): EXD-C10.

B. Provide for each Pair (PR) door(s).

UNITS	LOCK	ITEM	DESCRIPTION	FINISH	MFR
6	EA	HINGE, 4 1/2, STD WT	TA2714 4-1/2 X 4-1/2 NRP	26D	MCK
1	EA	MULLION	4954 X 7-2	SP28	VON
2	EA	RIM EXIT DEVICE EXIT ONLY	LD-99EO X 299 X 3-0	US26D	VON
2	EA	CLOSER	4040XP.RWPA.689.TBSRT	689	LCN
1	EA	DRIP CAP	810S X 76	MIL	HAG

C. DOOR BOTTOM BY FRP DOOR, MFR THRESHOLD BY ALUM FRAME MFR, WEATHERSTRIP BY ALUM FRAME MFR, FREE EGRESS AT ALL TIMES.

3.04 HARDWARE SET # 1.41: "EXTERIOR"

A. For use on Door Number(s): EXD-C10.

B. Provide for each Single (SGL) door(s).

UNITS	LOCK	ITEM	DESCRIPTION	FINISH	MFR
3	EA	HINGE, 4 1/2, STD WT	TA2714 4-1/2 X 4-1/2 NRP	26D	MCK
1	EA	RIM EXIT DEVICE EXIT ONLY	LD-99EO X 299 X 3-0	US26D	VON
1	EA	CLOSER	4040XP.RWPA.689.TBSRT	689	LCN
1	EA	DRIP CAP	810S X40	MIL	HAG

C. DOOR BOTTOM BY FRP DOOR, MFR THRESHOLD BY ALUM FRAME MFR, WEATHERSTRIP BY ALUM FRAME MFR.

3.05 HARDWARE SET # 1.42: "EXTERIOR"

A. For use on Door Number(s): EXD-500.

B. Provide for each Single (SGL) door(s).

UNITS	LOCK	ITEM	DESCRIPTION	FINISH	MFR
6	EA	HINGE, 4 1/2, STD WT	TA2714 4-1/2 X 4-1/2 NRP	26D	MCK
1	EA	CYLINDRICAL LOCK WITH THRU BOLTS	9K3-7-D-14-D-S3 X L/C	US26D	VON
1	EA	CLOSER	4040XP.HWPA.689.TBSRT	689	LCN

C. SPIC CORE BY OWNER, DOOR BOTTOM BY FRP DOOR MFR, THRESHOLD BY ALUM FRAME MFR, WEATHERSTRIP BY ALUM FRAME MFR.

3.06 HARDWARE SET # 1.43: "INTERIOR"

A. For use on Door Number(s): 1605, 1608, 1613, 1614B.

B. Provide for each Single (SGL) door(s).

UNITS	LOCK	ITEM	DESCRIPTION	FINISH	MFR
3	EA	HINGE, 4 1/2, STD WT	TA2714 4-1/2 X 4-1/2 NRP	26D	MCK
1	EA	CYLINDRICAL LOCK WITH THRU BOLTS	9K3-7-D-14-D-S3 X L/C	US26D	VON
1	EA	CLOSER	4040XP.HWPA.689.TBSRT	689	LCN

C. SPIC CORE BY OWNER, FREE EGRESS AT ALL TIMES.

3.07 HARDWARE SET # 1.43A: "FIRE RATED"

A. For use on Door Number(s): 1603, 1618, 1624, 1631, 1213, 1217.

B. Provide for each Single (SGL) door(s).

UNITS	LOCK	ITEM	DESCRIPTION	FINISH	MFR
3	EA	HINGE, 4 1/2, STD WT	TA2714 4-1/2 X 4-1/2 NRP	26D	MCK
1	EA	CYLINDRICAL LOCK WITH THRU BOLTS	9K3-7-D-14-D-S3 X L/C	US26D	VON
1	EA	CLOSER	4040XP.HWPA.689.TBSRT	689	LCN
1	EA	GASKETING	S773BL17	BL	PEM

C. SPIC CORE BY OWNER, FREE EGRESS AT ALL TIMES.

3.08 HARDWARE SET # 3.02: "INTRUDER (NOT) FIRE RATED"

A. For use on Door Number(s): 1606, 1606A, 1609, 1609A, 1609B, 1610, 1611, 1614, 1614A, 1615, 1615A, 1615B, 1616, 1617, 1617A

B. Provide for each Single (SGL) door(s).

UNITS	LOCK	ITEM	DESCRIPTION	FINISH	MFR
3	EA	HINGE, 4 1/2, STD WT	BB1279 4-1/2 X 4-1/2 NRP	US26D	HAG
1	EA	CYLINDRICAL LOCK WITH THRU BOLTS	9K3-7-IN-14-D-S3 X L/C	626	BES
1	EA	CLOSER	4040XP.HWPA.689.TBSRT	689	LCN
1	EA	KICK PLATE	K1050 X 4BE X 10 X 34	US32D	ROC
1	EA	WALL STOP	WS406/407-CCV	US26D	IVE
3	EA	SILENCER	SR64	GRY	IVE

C. SPIC CORE BY OWNER, FREE EGRESS AT ALL TIMES

3.09 HARDWARE SET # 3.02A: "INTRUDER FIRE RATED"

A. For use on Door Number(s): 1604, 1612, 1628, 1635

B. Provide for each Single (SGL) door(s).

UNITS	LOCK	ITEM	DESCRIPTION	FINISH	MFR
3	EA	HINGE, 4 1/2, STD WT	BB1279 4-1/2 X 4-1/2 NRP	US26D	HAG
1	EA	CYLINDRICAL LOCK WITH THRU BOLTS	9K3-7-IN-14-D-S3 X L/C	626	BES
1	EA	CLOSER	4040XP.HWPA.689.TBSRT	689	LCN
1	EA	KICK PLATE	K1050 X 4BE X 10 X 34	US32D	ROC
1	EA	WALL STOP	WS406/407-CCV	US26D	IVE
3	EA	GASKETING	S773BL17	BL	PEM

C. SPIC CORE BY OWNER, FREE EGRESS AT ALL TIMES.

3.10 HARDWARE SET # 4.02A: "PRIVACY"

A. For use on Door Number(s): 1620

B. Provide for each Single (SGL) door(s).

UNITS	LOCK	ITEM	DESCRIPTION	FINISH	MFR
3	EA	HINGE, 4 1/2, STD WT	BB1279 4-1/2 X 4-1/2 NRP	US26D	HAG
1	EA	PRIVACY SET, WITH THRU BOLTS	9K3-0-L-14-D-STK	626	BES
1	EA	CLOSER	4040XP.HWPA.689.TBSRT	689	LCN
1	EA	KICK PLATE	K1050 X 4BE X 10 X 34	US32D	ROC
3	EA	GASKETING	S773BL17	BL	PEM

C. FREE EGRESS AT ALL TIMES.

3.11 HARDWARE SET # 4.02B: "PRIVACY"

A. For use on Door Number(s): 1636, 1629

B. Provide for each Single (SGL) door(s).

UNITS	LOCK	ITEM	DESCRIPTION	FINISH	MFR
3	EA	HINGE, 4 1/2, STD WT	BB1279 4-1/2 X 4-1/2 NRP	US26D	HAG

1	EA	PRIVACY SET WITH THRU BOLTS	9K3-0-7-IN-14-D-STK	626	BES
1	EA	CLOSER	4040XP.HWPA.689.TBSRT	689	LCN
1	EA	KICK PLATE	K1050 X 4BE X 10 X 34	US32D	ROC

C. FREE EGRESS AT ALL TIMES

3.12 HARDWARE SET # 08.04A: "STOREROOM DOUBLE DOORS FIRE RATED"

A. For use on Door Number(s): 1627

B. Provide for each Pair door(s).

UNITS	LOCK	ITEM	DESCRIPTION	FINISH	MFR
6	EA	HINGE, 4 1/2, STD WT	TA2714 4-1/2 X 4-1/2 NRP	US26D	HAG
1	EA	CYLINDRICAL LOCK WITH THRU BOLTS	9K3-7-IN-14-D-S3 X L/C	626	BES
2	EA	FLUSH BOLT, AUTOMATIC	FB51P-12MD	32D	IVE
2	EA	CLOSER	4040XP .689	689	LCN
1	EA	COORDINATOR, BAR	COR52 X FL20	US28	IVE
1	EA	DUST PROOF STRIKE	DP2	US26D	IVE
1	EA	GASKETING	S773BL17	BL	PEM

C. PERMANENT CORES BY OWNER, FREE EGRESS AT ALL TIMES.

3.13 HARDWARE SET # 10.01A: "DOUBLE DOORS"

A. For use on Door Number(s): 1619, 1621

B. Provide for each Single door(s).

UNITS	LOCK	ITEM	DESCRIPTION	FINISH	MFR
3	EA	HINGE, 4 1/2, STD WT	TA2714 4-1/2 X 4-1/2 NRP	26D	MCK
1	EA	EXIT DEVICE	99L-F-2SI X 996L(#06) X 299F X 3-0 X 84 H	US26D	VON
1	EA	CLOSER	4040XP.HWPA.689.TBSRT	689	LCN
1	EA	KICK PLATE	K1050 X 4BE X 10 X 34	US32D	ROC
2	EA	RIM CYLINDER	12E-7-2-S2-RP X L/C	626	BES
1	EA	GASKETING	S773BL17	BL	PEM

C. PERMANENT CORES BY OWNER, FREE EGRESS AT ALL TIMES.

3.14 HARDWARE SET # 8.02: "DOUBLE DOORS"

A. For use on Door Number(s): C1SA, C1W

B. Provide for each Single door(s).

UNITS	LOCK	ITEM	DESCRIPTION	FINISH	MFR
6	EA	HINGE, 4 1/2, STD WT	TA2714 4-1/2 X 4-1/2 NRP	26D	MCK
2	EA	SVR EXIT DEVICE	9927L-2SI X 996L(#06) X 299F X 3-0 X 84 H X LBR	US26D	VON
2	EA	CLOSER	4040XP.HWPA.689.TBSRT	689	LCN
2	EA	KICK PLATE	K1050 X 4BE X 10 X 34	US32D	ROC

4	EA	RIM CYLINDER	12E-7-2-S2-RP X L/C	626	BES
1	EA	GASKETING	S773BL17	BL	PEM
2	EA	ELECTROMAGNETIC	998M	689	RIX

C. PERMANENT CORES BY OWNER, FREE EGRESS AT ALL TIMES.

3.15 HARDWARE SET # 8.02A: "DOUBLE DOORS"

A. For use on Door Number(s): 1611A, C1U, 1622, 1625

B. Provide for each Pair door(s).

UNITS	LOCK	ITEM	DESCRIPTION	FINISH	MFR
6	EA	HINGE, 4 1/2, STD WT	TA2714 4-1/2 X 4-1/2 NRP	26D	MCK
2	EA	SVR EXIT DEVICE	9927L-2SI X 996L(#06) X 299F X 3-0 X 84 H X LBR	US26D	VON
2	EA	CLOSER	4040XP.HWPA.689.TBSRT	689	LCN
2	EA	KICK PLATE	K1050 X 4BE X 10 X 34	US32D	ROC
4	EA	RIM CYLINDER	12E-7-2-S2-RP X L/C	626	BES
1	EA	GASKETING	S773BL17	BL	PEM

C. PERMANENT CORES BY OWNER, FREE EGRESS AT ALL TIMES.

END OF SECTION 080671

SECTION 081113
HOLLOW METAL DOORS AND FRAMES

PART 1 GENERAL

1.01 SECTION INCLUDES

A. Non-fire-rated hollow metal doors and frames.

B. Hollow metal frames for wood doors.

C. Fire-rated hollow metal doors and frames.

1.02 RELATED REQUIREMENTS

A. Section 087100 - Door Hardware.

B. Section 088000 - Glazing: Glass for doors and borrowed lites.

1.03 REFERENCE STANDARDS

A. ADA Standards - 2010 ADA Standards for Accessible Design.

B. ANSI/SDI A250.10 - Test Procedure and Acceptance Criteria for Prime Painted Steel Surfaces for Steel Doors and Frames.

C. ASTM A653/A653M - Standard Specification for Steel Sheet, Zinc-Coated (Galvanized) or Zinc-Iron Alloy-Coated (Galvannealed) by the Hot-Dip Process.

D. ASTM A1008/A1008M - Standard Specification for Steel, Sheet, Cold-Rolled, Carbon, Structural, High-Strength Low-Alloy, High-Strength Low-Alloy with Improved Formability, Required Hardness, Solution Hardened, and Bake Hardenable.

E. ASTM A1011/A1011M - Standard Specification for Steel, Sheet and Strip, Hot-Rolled, Carbon, Structural, High-Strength Low-Alloy, High-Strength Low-Alloy with Improved Formability, and Ultra-High Strength.

F. ICC A117.1 - Accessible and Usable Buildings and Facilities.

G. NAAMM HMMA 861 - Guide Specifications for Commercial Hollow Metal Doors and Frames.

H. SDI 117 - Manufacturing Tolerances for Standard Steel Doors and Frames.

1.04 SUBMITTALS

A. See Section 013000 - Administrative Requirements for submittal procedures.

B. Product Data: Materials and details of design and construction, hardware locations, reinforcement type and locations, anchorage and fastening methods, and finishes; and one copy of referenced standards/guidelines.

C. Shop Drawings: Details of each opening, showing elevations, glazing, frame profiles, and any indicated finish requirements.

D. Manufacturer's Qualification Statement.

E. Installer's Qualification Statement.

1.05 QUALITY ASSURANCE

A. Manufacturer Qualifications: Company specializing in manufacturing products specified in this section, with not less than three years documented experience.

B. Installer Qualifications: Company specializing in performing work of the type specified and with at least three years of documented experience.

C. Maintain at project site copies of reference standards relating to installation of products specified.

PART 2 PRODUCTS

2.01 MANUFACTURERS

2.02 PERFORMANCE REQUIREMENTS

A. Requirements for Hollow Metal Doors and Frames:
   1. Steel Sheet: Comply with one or more of the following requirements; galvannealed steel complying with ASTM A653/A653M, cold-rolled steel complying with ASTM A1008/A1008M, or hot-rolled pickled and oiled (HRPO) steel complying with ASTM A1011/A1011M, commercial steel (CS) Type B, for each.
   2. Accessibility: Comply with ICC A117.1 and ADA Standards.

B. Combined Requirements: If a particular door and frame unit is indicated to comply with more than one type of requirement, comply with the specified requirements for each type; for instance, an exterior door that is also indicated as being sound-rated must comply with the requirements specified for exterior doors and for sound-rated doors; where two requirements conflict, comply with the most stringent.

2.03 HOLLOW METAL FRAMES

A. Comply with standards and/or custom guidelines as indicated for corresponding door in accordance with applicable door frame requirements.

B. Interior Door Frames, Non-Fire Rated: Full profile/continuously welded typ at new walls, For existing walls - Slip-on type at gypsum board walls, and knock-down type at masonry walls..
   1. Frame Metal Thickness: 16 gauge, 0.053 inch, minimum.
   2. Frame Finish: Factory primed and field finished.

C. Door Frames, Fire-Rated: Full profile/continuously welded typ at new walls, For existing walls - Slip-on type at gypsum board walls, and knock-down type at masonry walls..
   1. Fire Rating: Same as door, labeled.
   2. Frame Metal Thickness: 16 gauge, 0.053 inch, minimum.
   3. Frame Finish: Factory primed and field finished.

D. Frames for Wood Doors: Comply with frame requirements in accordance with corresponding door.

2.04 FINISHES

A. Primer: Rust-inhibiting, complying with ANSI/SDI A250.10, door manufacturer's standard.

B. Bituminous Coating: Cold-applied asphalt mastic, compounded for 15 mil, 0.015 inch dry film thickness (DFT) per coat; provide inert-type noncorrosive compound free of asbestos fibers, sulfur components, and other deleterious impurities.
   1. Fire-Rated Frames: Comply with fire rating requirements indicated.

2.05 ACCESSORIES

A. Door Window Frames: Door window frames with glazing securely fastened within door opening.
   1. Size: As indicated on drawings.
   2. Frame Material: 18 gauge, 0.0478 inch, galvanized steel.
   3. Metal Finish: black polyester powder coating.
   4. Glazing: 1/4 inch thick, tempered glass, in compliance with requirements of authorities having jurisdiction.

B. Glazing: As specified in Section 088000, factory installed.

C. Removable Stops: Formed sheet steel, shape as indicated on drawings, mitered or butted corners; prepared for countersink style tamper proof screws.

D. Silencers: Resilient rubber, fitted into drilled hole; provide three on strike side of single door, three on center mullion of pairs, and two on head of pairs without center mullions.

E. Temporary Frame Spreaders: Provide for factory- or shop-assembled frames.

PART 3 EXECUTION

3.01 EXAMINATION

A. Verify existing conditions before starting work.

B. Verify that opening sizes and tolerances are acceptable.

C. Verify that finished walls are in plane to ensure proper door alignment.

3.02 PREPARATION

A. Coat inside of frames to be installed in masonry or to be grouted, with bituminous coating, prior to installation.

3.03 INSTALLATION

A. Install doors and frames in accordance with manufacturer's instructions and related requirements of specified door and frame standards or custom guidelines indicated.

B. Coordinate frame anchor placement with wall construction.

C. Install door hardware as specified in Section 087100.

D. Comply with glazing installation requirements of Section 088000.

E. Coordinate installation of electrical connections to electrical hardware items.

3.04 TOLERANCES

A. Clearances Between Door and Frame: Comply with related requirements of specified frame standards or custom guidelines indicated in accordance with SDI 117 or NAAMM HMMA 861.

B. Maximum Diagonal Distortion: 1/16 inch measured with straight edge, corner to corner.

3.05 ADJUSTING

A. Adjust for smooth and balanced door movement.

END OF SECTION

This page intentionally left blank

SECTION 081213
HOLLOW METAL FRAMES

PART 1 GENERAL

1.01 SECTION INCLUDES

A. Non-fire-rated hollow metal frames for non-hollow metal doors.

B. Fire-rated hollow metal frames for non-hollow metal doors.

C. Sound-rated hollow metal frames for non-hollow metal doors.

D. Interior and exterior glazed borrowed lite frames.

1.02 RELATED REQUIREMENTS

A. Section 087100 - Door Hardware: Hardware, silencers, and weatherstripping.

B. Section 088000 - Glazing: Glazed borrowed lites.

C. Section 099000 - Painting and Coating: Field painting.

1.03 REFERENCE STANDARDS

A. ADA Standards - 2010 ADA Standards for Accessible Design.

B. ANSI/SDI A250.4 - Test Procedure and Acceptance Criteria for Physical Endurance for Steel Doors, Frames and Frame Anchors.

C. ANSI/SDI A250.8 - Specifications for Standard Steel Doors and Frames (SDI-100).

D. ANSI/SDI A250.10 - Test Procedure and Acceptance Criteria for Prime Painted Steel Surfaces for Steel Doors and Frames.

E. ASTM A653/A653M - Standard Specification for Steel Sheet, Zinc-Coated (Galvanized) or Zinc-Iron Alloy-Coated (Galvannealed) by the Hot-Dip Process.

F. ASTM A1008/A1008M - Standard Specification for Steel, Sheet, Cold-Rolled, Carbon, Structural, High-Strength Low-Alloy, High-Strength Low-Alloy with Improved Formability, Required Hardness, Solution Hardened, and Bake Hardenable.

G. ASTM A1011/A1011M - Standard Specification for Steel, Sheet and Strip, Hot-Rolled, Carbon, Structural, High-Strength Low-Alloy, High-Strength Low-Alloy with Improved Formability, and Ultra-High Strength.

H. ASTM C143/C143M - Standard Test Method for Slump of Concrete.

I. ASTM C476 - Standard Specification for Grout for Masonry.

J. BHMA A156.115 - Hardware Preparation in Steel Doors and Frames.

K. ICC A117.1 - Accessible and Usable Buildings and Facilities.

L. NAAMM HMMA 830 - Hardware Selection for Hollow Metal Doors and Frames.

M. NAAMM HMMA 831 - Hardware Locations for Hollow Metal Doors and Frames.

N. NAAMM HMMA 861 - Guide Specifications for Commercial Hollow Metal Doors and Frames.

O. NFPA 80 - Standard for Fire Doors and Other Opening Protectives.

P. NFPA 105 - Standard for Smoke Door Assemblies and Other Opening Protectives.

Q. SDI 117 - Manufacturing Tolerances for Standard Steel Doors and Frames.

R. UL 10C - Standard for Positive Pressure Fire Tests of Door Assemblies.

S. UL 1784 - Standard for Air Leakage Tests of Door Assemblies and Other Opening Protectives.

1.04 SUBMITTALS

A. See Section 013000 - Administrative Requirements for submittal procedures.

B. Product Data: Materials and details of design and construction, hardware locations, reinforcement type and locations, anchorage and fastening methods, and finishes.

C. Shop Drawings: Details of each opening, showing elevations, glazing, frame profiles, and identifying location of different finishes, if any.

D. Manufacturer's Certificate: Certification that products meet or exceed specified requirements.

E. Manufacturer's qualification statement.

F. Installer's qualification statement.

QUALITY ASSURANCE

A. Manufacturer Qualifications: Company specializing in manufacturing products specified in this section, with not less than three years of documented experience.

B. Installer Qualifications: Company specializing in performing work of the type specified and with at least three years of documented experience.

C. Maintain at project site copies of reference standards relating to installation of products specified.

PART 2 PRODUCTS

2.01 MANUFACTURERS

A. Hollow Metal Frames with Integral Casings:
   1. Curries, an Assa Abloy Group company: www.assaabloydss.com.
   2. Republic Doors, an Allegion brand: www.republicdoor.com/#sle.
   3. Mesker Door LLC; www.meskerdoor.com.
   4. Substitutions: See Section 016000 - Product Requirements.

2.02 PERFORMANCE REQUIREMENTS

A. Refer to Door and Frame Schedule on drawings for frame sizes, fire ratings, sound ratings, finishing, door hardware to be installed, and other variations, if any.

B. Door Frame Type: Provide hollow metal door frames with integral casings.

C. Steel Sheet: Comply with one or more of the following requirements; galvannealed steel complying with ASTM A653/A653M, cold-rolled steel complying with ASTM A1008/A1008M, or hot-rolled pickled and oiled (HRPO) steel complying with ASTM A1011/A1011M, commercial steel (CS) Type B, for each.

D. Accessibility: Comply with ICC A117.1 and ADA Standards.

E. Glazed Lights: Non-removable stops on non-secure side; sizes and configurations as indicated on drawings.

F. Combined Requirements: If a particular door and frame unit is indicated to comply with more than one type of requirement, comply with the specified requirements for each type; for instance, an exterior frame that is also indicated as being sound-rated must comply with the requirements specified for exterior frames and for sound-rated frames; where two requirements conflict, comply with the most stringent.

G. Hardware Preparations, Selections and Locations: Comply with BHMA A156.115, NAAMM HMMA 830, NAAMM HMMA 831 or ANSI/SDI A250.8 (SDI-100) in accordance with specified requirements.

H. Zinc Coating: Components zinc-coated (galvanized) and/or zinc-iron alloy-coated (galvannealed) by the hot-dip process in accordance with ASTM A653/A653M, with manufacturer's standard coating thickness, unless noted otherwise.

I. Provide mortar guard boxes for hardware cut-outs in frames to be installed in masonry or to be grouted.

J. Mullions for Pairs of Doors: Removable type, of profile similar to jambs. Removable mullions shall be removable by Best compatible keying.

K. Transom Bars: Fixed, of profile same as jamb and head.

L. Frames for Interior Glazing or Borrowed Lites: Construction and face dimensions to match door frames, and as indicated on drawings.

M. Frames in Masonry Walls: Size to suit masonry coursing with head member 4 inches high to fill opening without cutting masonry units.

N. Frames Wider than 48 Inches: Reinforce with steel channel fitted tightly into head of frame, and flush with top.

2.03 HOLLOW METAL DOOR FRAMES WITH INTEGRAL CASINGS

A. Frame Finish: Factory primed and field finished.

B. Interior Door Frames, Non-Fire Rated: Face welded type.
   1. Based on SDI Standards: ANSI/SDI A250.8 (SDI-100).
      a. Level 2 - Heavy-duty.
      b. Physical Performance Level B 500 000 cycles; in accordance with ANSI/SDI A250.4.
      c. Frame Metal Thickness: 18 gauge, 0.042 inch, minimum.

C. Fire-Rated Door Frames: Face welded type.
   1. Based on SDI Standards: ANSI/SDI A250.8 (SDI-100).
      a. Level 2 - Heavy-duty.
      b. Physical Performance Level B, 500,000 cycles; in accordance with ANSI/SDI A250.4.
      c. Frame Metal Thickness: , minimum.
   2. Fire Rating: As indicated on drawings, tested in accordance with UL 10C or NFPA 252 ("positive pressure fire tests").
   3. Temperature-Rise Rating (TRR) Across Framed Door Thickness: In accordance with local building code and authorities having jurisdiction.
      a. Provide units listed and labeled by UL (Underwriters Laboratories) - UL (BMD).
      b. Attach fire rating label to each fire rated unit.
   4. Smoke and Draft Control Doors (Indicated with letter "S" on Drawings and/or Door Schedule): Self-closing or automatic closing framed doors in accordance with NFPA 80 and NFPA 105, with fire-resistance-rated wall construction rated the same or greater than the fire-rated doors, and the following;
      a. Maximum Air Leakage: 3.0 cfm/sq ft of framed door opening at 0.10 inch w.g. pressure, when tested in accordance with UL 1784 at both ambient and elevated temperatures.
      b. Gasketing: Provide gasketing or edge sealing as necessary to achieve leakage limit.
      c. Label: Include the "S" label on fire-rating label of door.

2.04 FINISHES

A. Primer: Rust-inhibiting, complying with ANSI/SDI A250.10, door manufacturer's standard.

B. Bituminous Coating: Cold-applied asphalt mastic, compounded for 15 mil, 0.015 inch dry film thickness (DFT) per coat; provide inert-type noncorrosive compound free of asbestos fibers, sulfur components, and other deleterious impurities.
   1. Fire-Rated Frames: Comply with fire rating requirements indicated.

2.05 ACCESSORIES

A. Silencers: Resilient rubber, fitted into drilled hole; provide three on strike side of single door, three on center mullion of pairs, and two on head of pairs without center mullions.

B. Removable Stops: Rolled steel bar, shape as indicated on drawings, mitered corners; prepared for countersink style tamper proof screws.

C. Grout for Frames: Mortar grout complying with ASTM C476 with maximum slump of 4 inches as measured in accordance with ASTM C143/C143M for hand troweling in place; plaster grout and thinner pumpable grout are prohibited.

D. Temporary Frame Spreaders: Provide for factory- or shop-assembled frames.

PART 3 EXECUTION

3.01 EXAMINATION

A. Verify existing conditions before starting work.

B. Verify that opening sizes and tolerances are acceptable.

C. Verify that finished walls are in plane to ensure proper door alignment.

3.02 PREPARATION

A. Coat inside of frames to be installed in masonry or to be grouted, with bituminous coating, prior to installation.

3.03 INSTALLATION

A. Install frames in accordance with manufacturer's instructions and related requirements of specified frame standards or custom guidelines indicated.

B. Install fire rated units in accordance with NFPA 80.

C. Coordinate frame anchor placement with wall construction.

D. Grout frames in masonry construction, using hand trowel methods; brace frames so that pressure of grout before setting will not deform frames.

E. Comply with glazing installation requirements of Section 088000.

F. Install door hardware as specified in Section 087100 - Door Hardware.

G. Coordinate installation of electrical connections to electrical hardware items.

H. Touch up damaged factory finishes.

3.04 TOLERANCES

A. Clearances Between Door and Frame: Comply with related requirements of specified frame standards or custom guidelines indicated in accordance with SDI 117 or NAAMM HMMA 861.

B. Maximum Diagonal Distortion: 1/16 inch measured with straight edges, crossed corner to corner.

3.05 SCHEDULE - SEE DRAWINGS

END OF SECTION

SECTION 081416
FLUSH WOOD DOORS

PART 1 GENERAL

1.01 SECTION INCLUDES

A. Flush wood doors; flush and flush glazed configuration; fire-rated and non-rated.

1.02 RELATED REQUIREMENTS

A. Section 081213 - Hollow Metal Frames.

B. Section 087100 - Door Hardware.

C. Section 088000 - Glazing.

1.03 REFERENCE STANDARDS

A. 16 CFR 1201 - Safety Standard for Architectural Glazing Materials.

B. AWI/AWMAC/WI (AWS) - Architectural Woodwork Standards, 2nd Edition.

C. AWMAC/WI (NAAWS) - North American Architectural Woodwork Standards.

D. NFPA 80 - Standard for Fire Doors and Other Opening Protectives.

E. NFPA 105 - Standard for Smoke Door Assemblies and Other Opening Protectives.

F. UL 10C - Standard for Positive Pressure Fire Tests of Door Assemblies.

G. UL 1784 - Standard for Air Leakage Tests of Door Assemblies and Other Opening Protectives.

H. WDMA I.S. 1A - Interior Architectural Wood Flush Doors.

1.04 SUBMITTALS

A. See Section 013000 - Administrative Requirements for submittal procedures.

B. Product Data: Indicate door core materials and construction; veneer species, type and characteristics. Include certification that doors are manufactured by the hot pressed method, bonding faces, crossbands, and core together in a single operation with Type 1 adhesive.

C. Shop Drawings: Show doors and frames, elevations, sizes, types, swings, undercuts, beveling, blocking for hardware, factory machining, factory finishing, cutouts for glazing and other details.

D. Samples: Submit two samples of door veneer, 4 by 4 inch in size illustrating wood grain, stain color, and sheen.

E. Manufacturer's qualification statement.

F. Installer's qualification statement.

G. Warranty, executed in Owner's name.

1.05 QUALITY ASSURANCE

A. Manufacturer Qualifications: Company specializing in manufacturing the products specified in this section, with not less than three years of documented experience.

B. Installer Qualifications: Company specializing in performing work of the type specified in this section, with not less than three years of documented experience.

1.06 DELIVERY, STORAGE, AND HANDLING

A. Package, deliver and store doors in accordance with specified quality standard.

B. Accept doors on site in manufacturer's packaging, and inspect for damage.

C. Protect doors with resilient packaging sealed with heat shrunk plastic. Do not store in damp or wet areas; or in areas where sunlight might bleach veneer. Seal top and bottom edges with tinted sealer if stored more than one week. Break seal on site to permit ventilation.

1.07 WARRANTY

A. See Section 017800 - Closeout Submittals for additional warranty requirements.

B. Manufacturer Warranty: Provide manufacturer's warranty on interior doors for the life of the installation. Complete forms in Owner's name and register with manufacturer.
   1. Include coverage for delamination of veneer, warping beyond specified installation tolerances, defective materials, and telegraphing core construction.

PART 2 PRODUCTS

2.01 MANUFACTURERS

A. Wood Veneer Faced Doors:
   1. Construction Specialties, Inc; Acrovyn Flush Doors: www.c-sgroup.com/#sle.
   2. Eggers Industries: www.eggersindustries.com/#sle.
   3. Graham Wood Doors: www.grahamdoors.com/#sle.
   4. Haley Brothers: www.haleybros.com/#sle.
   5. Masonite Architectural: www.architectural.masonite.com/#sle.
   6. Oregon Door; Architectural Series: www.oregondoor.com/#sle.
   7. VT Industries.www.vtindustries.com
   8. Substitutions: See Section 016000 - Product Requirements.

2.02 DOORS

A. Doors: See drawings for locations and additional requirements.
   1. Quality Standard: Custom Grade, Heavy Duty performance, in accordance with AWI/AWMAC/WI (AWS), AWMAC/WI (NAAWS) or WDMA I.S. 1A.
   2. Wood Veneer Faced Doors: 5-ply unless otherwise indicated.

B. Interior Doors: 1-3/4 inches thick unless otherwise indicated; flush construction.
   1. Provide solid core doors at each location.
   2. Fire Rated Doors: Tested to ratings indicated on drawings in accordance with UL 10C - Positive Pressure; Underwriters Laboratories Inc. (UL) labeled without any visible seals when door is closed.
   3. Smoke and Draft Control Doors (Indicated as "S" on Drawings): In addition to required fire rating, provide door assemblies tested in accordance with UL 1784 with maximum air leakage of 3.0 cfm per sq ft of door opening at 0.10 inch wg pressure at both ambient and elevated temperatures for "S" label; if necessary, provide additional gasketing or edge sealing.
   4. Wood veneer facing with factory transparent finish where indicated on drawings.

2.03 DOOR AND PANEL CORES

A. Non-Rated Solid Core and 20 Minute Rated Doors: Type particleboard core (PC), plies and faces as indicated.

B. Fire-Rated Doors: Mineral core type, with fire resistant composite core (FD), plies and faces as indicated above; with core blocking as required to provide adequate anchorage of hardware without through-bolting.

2.04 DOOR FACINGS

A. Veneer Facing for Transparent Finish: Red oak, veneer grade in accordance with quality standard indicated, plain sliced (flat cut), with book match between leaves of veneer, running match of spliced veneer leaves assembled on door or panel face.
   1. Vertical Edges: Same species as face veneer.
   2. "Running Match" each pair of doors and doors in close proximity to each other.
   3. "Pair Match" each pair of doors; "Set Match" pairs of doors within 10 feet of each other when doors are closed.

B. Facing Adhesive: - Type I - waterproof.

2.05 DOOR CONSTRUCTION

A. Doors shall be 5-ply and comply with AWI/WDMA PC5 construction. Doors shall be manufactured by the hot-press method, bonding faces, crossbands and core together in a

single operation with Type I adhesive. Doors manufactured by cold-pressing 2 or 3-ply pre-manufactured door skins to multiple cores in the same press will not be accepted.

B. Fabricate doors in accordance with door quality standard specified.

C. Cores Constructed with stiles and rails:
   1. Provide solid blocks at lock edge for hardware reinforcement.
   2. Provide solid blocking for other throughbolted hardware.

D. Where supplementary protective edge trim is required, install trim after veneer facing has been applied full-width.

E. Glazed Openings: Non-removable stops on non-secure side; sizes and configurations as indicated on drawings.

F. Factory machine doors for hardware other than surface-mounted hardware, in accordance with hardware requirements and dimensions.

G. Factory fit doors for frame opening dimensions identified on shop drawings, with edge clearances in accordance with specified quality standard.
   1. Exception: Doors to be field finished.

H. Provide edge clearances in accordance with the quality standard specified.

2.06 FINISHES - WOOD VENEER DOORS

A. Finish work in accordance with AWI/AWMAC/WI (AWS) or AWMAC/WI (NAAWS), Section 5 - Finishing for grade specified and as follows:
   1. Transparent:
      a. System - 12, Polyurethane, Water-based.
      b. Stain: As selected by Architect.
      c. Sheen: Semigloss.

B. Factory finish doors in accordance with approved sample.

C. Seal door top edge with color sealer to match door facing.

2.07 ACCESSORIES

A. Metal Louvers:
   1. Louver Blade: Inverted V blade, sight proof, light proof.

B. Glazed Openings:
   1. Laminated Safety Glass: Comply with 16 CFR 1201 test requirements for Category II.
   2. Tint: Clear.

C. Door Window Frames: Door window frames with glazing securely fastened within door opening.
   1. Size: As indicated on drawings.

PART 3 EXECUTION

3.01 EXAMINATION

A. Verify existing conditions before starting work.

B. Verify that opening sizes and tolerances are acceptable.

C. Do not install doors in frame openings that are not plumb or are out-of-tolerance for size or alignment.

3.02 INSTALLATION

A. Install doors in accordance with manufacturer's instructions and specified quality standard.
   Install fire-rated doors in accordance with NFPA 80 requirements.
   1. Install smoke and draft control doors in accordance with NFPA 105 requirements.

B. Factory-Finished Doors: Do not field cut or trim; if fit or clearance is not correct, replace door.

C. Use machine tools to cut or drill for hardware.

D. Coordinate installation of doors with installation of frames and hardware.

E. Install door louvers plumb and level.

3.03 TOLERANCES

A. Comply with specified quality standard for fit and clearance tolerances.

B. Comply with specified quality standard for telegraphing, warp, and squareness.

3.04 ADJUSTING

A. Adjust doors for smooth and balanced door movement.

B. Adjust closers for full closure.

3.05 SCHEDULE - SEE DRAWINGS

END OF SECTION

SECTION 081613
FIBERGLASS DOORS

PART 1 GENERAL

1.01 SECTION INCLUDES

A. Fiberglass reinforced polyester (FRP) doors.

B. Frames for fiberglass reinforced polyester (FRP) doors.

C. Fiberglass reinforced polyester (FRP) Architectural Panels.

D. Hinges.

E. Glazing.

F. Louvers.

1.02 RELATED REQUIREMENTS

A. Section 087100 - Door Hardware: Door hardware.

1.03 REFERENCE STANDARDS

A. ANSI/SDI A250.4 - Test Procedure and Acceptance Criteria for Physical Endurance for Steel Doors, Frames and Frame Anchors.

B. ASTM D635 - Standard Test Method for Rate of Burning and/or Extent and Time of Burning of Plastics in a Horizontal Position.

C. ASTM B 209 - Aluminum and Aluminum-Alloy Sheet and Plate.

D. ASTM B 221 - Aluminum-Alloy Extruded Bars, Rods, Wire, Profiles, and Tubes.

E. ASTM D 256 - Determining the Pendulum Impact Resistance of Notched Specimens of Plastics.

F. ASTM D 570 - Water Absorption of Plastics.

G. ASTM D 638 - Tensile Properties of Plastics.

H. ASTM D 790 - Flexural Properties of Unreinforced and Reinforced Plastics and Electrical Insulating Materials.

I. ASTM D 1308 - Standard Test Method for Effect of Household Chemicals on Clear and Pigmented Organic Finishes.

J. ASTM D 1621 - Compressive Properties of Rigid Cellular Plastics.

K. ASTM D 1623 - Tensile and Tensile Adhesion Properties of Rigid Cellular Plastics.

L. ASTM E84 - Standard Test Method for Surface Burning Characteristics of Building Materials.

M. ICC (IBC) - International Building Code.

N. NFPA 80 - Standard for Fire Doors and Other Opening Protectives.

1.04 ADMINISTRATIVE REQUIREMENTS

A. Coordination: Obtain hardware templates from hardware manufacturer prior to starting fabrication.

1.05 SUBMITTALS

A. See Section 013000 - Administrative Requirements for submittal procedures.

B. Product Data: Provide manufacturer's standard details, installation instructions, and hardware and anchor recommendations.

C. Shop Drawings: Unique to this project to avoid resubmittal. Show layout, dimensions and profiles; include assembly methods.

1. Indicate product components, including hardware reinforcement locations and preparations, accessories, finish colors, patterns, and textures.

D. Selection Samples: Submit two complete sets of color chips, illustrating manufacturer's available finishes, colors, and textures.

E. Manufacturer's qualification statement.

F. Installer's qualification statement.

G. Warranty: Submit manufacturer warranty and ensure that forms have been completed in Owner's name and registered with manufacturer; include detailed terms of warranty.

1.06 QUALITY ASSURANCE

A. Manufacturer Qualifications: Company specializing in manufacturing products of the type specified in this section, with not less than three years of documented experience.

B. Installer Qualifications: Company specializing in performing work of the type specified and with at least three years of documented experience.

1.07 DELIVERY, STORAGE, AND HANDLING

A. Mark doors with location of installation, door type, color, and weight.

B. Deliver materials in manufacturer’s original, unopened, undamaged containers with identification labels intact.

C. Store materials in original packaging, under cover, protected from exposure to harmful weather conditions and from direct contact with water.
   1. Store at temperature and humidity conditions recommended by manufacturer.
   2. Do not use non-vented plastic or canvas shelters.
   3. Immediately remove wet wrappers.

D. Store in position recommended by manufacturer, elevated minimum 4 inches above grade, with minimum 1/4 inch space between doors.

1.08 FIELD CONDITIONS

A. Do not install doors until structure is enclosed.

B. Maintain temperature and humidity at manufacturer's recommended levels during and after installation of doors.

1.09 WARRANTY

A. See Section 017800 - Closeout Submittals, for additional warranty requirements.

B. Provide ten (10) year manufacturer warranty covering materials and workmanship , including degradation or failure due to chemical contact.

C. Provide Ten (10) year application warranty on all factory installed hardware.

D. Lifetime warranty on delamination or bubbling of door skin.

E. Lifetime warranty on corner joinery and core deterioration.

PART 2 PRODUCTS

2.01 MANUFACTURERS

A. Fiberglass Doors:
   1. Special - Lite Inc.: Model SL-17, www.special-lite.com.
   2. Substitutions: Not permitted

2.02 PRODUCT DESCRIPTION:

A. Exterior entry doors constructed of extruded aluminum frame members, fiberglass reinforced polyester face sheets and foam insulation core

B. Exterior door frames to be Aluminum and anodized dark bronze color, see drawings.

C. Transom Panels: To match door, or as indicated on Drawings

D. Side Lites: match door, or as indicated on Drawings.

2.03 PERFORMANCE REQUIREMENTS

A. General: Provide door assemblies that have been designed and fabricated to comply with specified performance requirements, as demonstrated by testing manufacturer's corresponding standard systems.

B. Air Infiltration: For a single door 3'-0" x 7'-0", test specimen shall be tested in accordance with ASTM E 283 at pressure differential of 6.27 psf. Door shall not exceed 0.58 cfm/sf.

C. Water Resistance: For a single door 3'-0" x 7'-0", test specimen shall be tested in accordance with ASTM E 331 at pressure differential of 7.50 psf. Door shall not have water leakage.

D. Indoor air quality testing per ASTM D 6670-01: GREENGUARD Environmental Institute Certified including GREENGUARD for Children and Schools Certification.

E. Thermal Transmission, Exterior Doors, U-Value, AAMA 1503-98: Maximum of 0.29 BTU/hr x sf x degrees F.

F. Surface Burning Characteristics, FRP Doors and Panels, ASTM E 84:
   1. Flame Spread: Maximum of 200, Class C.
   2. Smoke Developed: Maximum of 450, Class C.

G. Surface Burning Characteristics, Class A Option On Interior Faces of FRP Exterior Panels and Both Faces of FRP Interior Panels, ASTM E 84:
   1. Flame Spread: Maximum of 25.
   2. Smoke Developed: Maximum of 450.

H. Forced Entry Test, Single Door:
   1. Uniform Static Load, ASTM E 330: Plus or Minus 195 pounds per square foot.
   2. Forced Entry Test, 300 Pound Load Applied, SFBC 3603.2 (b)(5): Passed.

I. Forced Entry Test, Double Doors:
   1. Uniform Static Load, ASTM E 330: Plus or Minus 112.5 pounds per square foot.
   2. Forced Entry Test, 300 Pound Load Applied, AAMA 1304: Passed.

J. Impact Strength, FRP Doors and Panels, Nominal Value, ASTM D 256: 14.0 foot-pounds per inch of notch.

K. Tensile Strength, FRP Doors and Panels, Nominal Value, ASTM D 638: 12,000 psi.

L. Flexural Strength, FRP Doors and Panels, Nominal Value, ASTM D 790: 21,000 psi.

M. Water Absorption, FRP Doors and Panels, Nominal Value, ASTM D 570: 0.20 percent after 24 hours.

N. Indentation Hardness, FRP Doors and Panels, Nominal Value, ASTM D 2583: 55.

O. Gardner Impact Strength, FRP Doors and Panels, Nominal Value, ASTM D 5420: 120 in-lb.

P. Abrasion Resistance, Face Sheet, Taber Abrasion Test, 25 Cycles at 1,000 Gram Weight with CS-17 Wheel: Maximum of 0.029 average weight loss percentage.

Q. Stain Resistance, ASTM D 1308: Face sheet unaffected after exposure to red cabbage, tea, and tomato acid. Stain removed easily with mild abrasive or FRP cleaner when exposed to Sharpie ink pen and white spray paint.

R. Compressive Strength, Foam Core, Nominal Value, ASTM D 1621: 79.9 psi.

S. Compressive Modulus, Foam Core, Nominal Value, ASTM D 1621: 370 psi.

T. Tensile Adhesion, Foam Core, Nominal Value, ASTM D 1623: 45.3 psi.

2.04 FIBER REINFORCED POLYESTER DOOR COMPONENTS

A. Door Construction:
   1. Thickness: 1-3/4 inches.
   2. Stiles and Rails: Aluminum Alloy 6063-T6, minimum of 2-5/16-inch depth, corners mitered or mortise & tenon.
   3. Top rail: Aluminum Alloy 6063-T5, minimum of 6-inch depth

4. Provide joinery of 3/8-inch diameter full-width tie rods through extruded splines top and bottom as standard tubular shaped stiles and rails reinforced to accept hardware as specified or Mortise and Tenon on all four joints secured with 3/8" diameter full width tie rods one at Head rail and one at bottom rail.

B. Face Sheet:
   1. Material: SpecLite3, 0.120-inch thickness, finish color throughout. Abuse-resistant engineered surface.
   2. Texture: Pebble Grain.
   3. Color: As selected by the Architect from manufacturer's full range of color selections. Exposed colors shall be fade/ chalking resistant for full term of warranty

C. Core:
   1. Material: Polyurethane foam.
   2. Density: Minimum of 5 pounds per cubic foot.
   3. R-Value: Minimum of 11.

D. Hardware:
   1. Premachine doors in accordance with templates from specified hardware manufacturers and hardware schedule.
   2. Factory installed hardware (see warranty requirements).
   3. Reinforce for scheduled hardware.
   4. Adjustable astragal on stile.
   5. Concealed Adjustable Bottom Brush.

2.05 MATERIALS

A. Aluminum Members:
   1. Extrusions: ASTM B 221.
   2. Sheet and Plate: ASTM B 209.
   3. Alloy and Temper: As required by manufacturer for strength, corrosion resistance, application of required finish, and control of color.
   4. Exposed colors shall be fade/ chalking resistant for full term of warranty.

B. Components: Door and frame components from same manufacturer.

C. Fasteners:
   1. Material: Aluminum, 18-8 stainless steel, or other noncorrosive metal.
   2. Compatibility: Compatible with items to be fastened.
   3. Exposed Fasteners: Screws with finish matching items to be fastened.

2.06 FABRICATION

A. Sizes and Profiles: Required sizes for door and frame units, and profile requirements shall be as indicated on the Drawings

B. Coordination of Fabrication: Field measure before fabrication and show field recorded measurements on shop drawings.

C. Assembly:
   1. Complete cutting, fitting, forming, drilling, and grinding of metal before assembly.
   2. Remove burrs from cut edges.

D. Fit:
   1. Maintain continuity of line and accurate relation of planes and angles.
   2. Secure attachments and support at mechanical joints with hairline fit at contacting members.

2.07 ARCHITECTURAL PANELS

A. Face Sheets:
   1. Material: FRP, 0.120-inch thickness, finish color throughout. Abuse-resistant engineered surface.

2. Texture: Pebble
3. Color: To be selected by Owner. Exposed colors shall be fade/ chalking resistant for full term of warranty
4. Insulated FRP Panels:
    a. Panel thickness: Same as adjacent doors.
    b. Face sheets: FRP, 0.120-inch minimum thickness.
    c. Core: Foamed polyurethane core of a minimum of 5 pounds per cubic foot density.
    d. Form components to function as single unit.
    e. U-Value: Minimum of 0.18 for 1-inch panels.
5. Class A Flame Spread and Smoke Developed Rating:
    a. Class A flame spread and smoke developed rating on interior faces of exterior panels and both faces of interior panels.
    b. Flame Spread, ASTM E 84: Maximum of 25.
    c. Smoke Developed, ASTM E 84: Maximum of 450.

2.08 ALUMINUM FINISHES

A. Anodized Finish: Class I finish, 0.7 mils thick.
    1. Color: Dark Bronze, AA-M10C12C22A44 as scheduled.

2.09 DOOR AND FRAME ASSEMBLIES

A. Door and Frame Assemblies: Factory-fabricated, prepared and machined for hardware.
    1. Door and frame pre-assembled, complete with hinges; shipped with braces, spreaders, and packaging as required to prevent damage. Color to match exposed styles and rails.
    2. Physical Endurance: Swinging door cycle test to ANSI/SDI A250.4, Level A (1,000,000 cycles) minimum; tested with hardware and fasteners intended for use on project.
    3. Screw-Holding Capacity: Tested to 890 pounds, minimum.
    4. Surface Burning Characteristics: Flame spread index (FSI) of 0 to 25, Class A, and smoke developed index (SDI) of 450 or less, when tested in accordance with ASTM E84.
    5. Flammability: Self-extinguishing when tested in accordance with ASTM D635.
    6. Clearance Between Door and Frame: 1/8 inch, maximum.
    7. Clearance Between Bottom of Door and Finished Floor: 3/4 inch, maximum; not less than 1/4 inch clearance to threshold.
    8. Provide frame anchors that allow for variation in rough opening size; field cutting of doors or frames to fit is not permitted.
    9. Concealed Adjustable Bottom Brush; Model SL-301: Concealed unit with two adjustable nylon bristle brushes to create a weather-tight seal with any style threshold; two adjustment screws at the hinge stile side of the door allowing either side or both sides of the brush insert to be moved from [0.15] inches extended to [0.74] inches fully extended.

2.10 HARDWARE

A. Door Hardware: See Section 087100 - Door Hardware

2.11 ACCESSORIES

A. Concealed Adjustable Bottom Brush; Model SL-301: Concealed unit with two adjustable nylon bristle brushes to create a weather-tight seal with any style threshold; two adjustment screws at the hinge stile side of the door allowing either side or both sides of the brush insert to be moved from 0.15 inches extended to 0.74 inches fully extended.

B. Glazing Stops: Factory installed with screw-applied aluminum stops anodized to match perimeter door rails; fasteners not penetrating waterproof integrity.
    1. Exterior Doors: Provide non-removable stops on exterior side with continuous compression gasket weatherseal.
    2. Opening Sizes: As indicated on Drawings.

C. Glazing:

D. Door Vision Lite Frames: Frames with glazing securely fastened within door opening.

1. Size: As indicated on drawings.

E. Factory Installed Glazing: Laminated safety glass, 1/4 inch thick, with minimum 0.030 inch thick interlayer, clear.

F. Factory Installed Glazing: Insulated - Laminated safety glass, 1/4 inch thick, with minimum 0.030 inch thick interlayer, tinted low e in 1 inch glass insulating units.

G. Louvers for Non-Fire-Rated Doors: Same materials, construction, finish, and color as door; fixed vanes, 45 degree sloped vanes.
1. Insect Screens: Fiberglass mesh.

H. Hardware: As specified in Section 087100.

PART 3 EXECUTION

3.01 EXAMINATION

A. Verify actual dimensions of openings by field measurements before door fabrication; show recorded measurements on shop drawings.

B. Do not begin installation until substrates have been properly prepared.

C. Do not install doors in frame openings that are not plumb or are out-of-tolerance for size or alignment.

D. If substrate preparation is the responsibility of another installer, notify Architect of unsatisfactory preparation before proceeding. Proceeding with the work shall indicate acceptance of existing conditions.

3.02 PREPARATION

A. Remove existing doors and frames, and dispose of all removed materials in accordance with local authorities having jurisdiction.

B. Prepare surfaces using the methods recommended by the manufacturer for achieving the best result for the substrate under the project conditions.

C. Clean and prepare substrate in accordance with manufacturer's directions.

D. Protect adjacent work and finish surfaces from damage during installation.

3.03 INSTALLATION

A. Install in accordance with manufacturer's instructions; do not penetrate frames with anchors.

B. Where required, Install fire-rated assemblies in accordance with NFPA 80.

C. Set units plumb, level, and true-to-line, without warping or racking doors, and with specified clearances; anchor in place.

D. Separate aluminum and other metal surfaces from sources of corrosion of electrolytic action at points of contact with other materials.

E. Repair or replace damaged installed products.

F. Repair minor damages to finish in accordance with manufacturer's instructions and as approved by Architect.

G. Remove and replace damaged components that cannot be successfully repaired as determined by Architect.

H. Install thresholds custom cut and designed for this installation and embedded in sealant

3.04 ADJUSTING

A. Lubricate, test, and adjust doors to operate easily, free from warp, twist or distortion, and to fit watertight for entire perimeter.

B. Adjust hardware for smooth and quiet operation.

C. Adjust doors to fit snugly and close without sticking or binding.

D. Adjust automatic door closer for smooth and consistent activation and operation, as well as manual operation when ADA activation is turned off with 15 lbs maximum pressure to operate.

3.05 CLEANING

A. Remove all paper labels.

B. Clean installed products in accordance with manufacturer’s instructions prior to owner’s acceptance.

3.06 PROTECTION

A. Protect installed products from damage until Date of Substantial Completion.

B. Clean doors [and glazing] promptly after installation in accordance with manufacturer's instructions.

C. Do not use harsh cleaning materials or methods that would damage any finish.

D. Obtain signoff/acknowledgement at punch list from Architect/Engineer that cleaning has been done satisfactorily.

END OF SECTION

This page intentionally left blank

SECTION 083100
ACCESS DOORS AND PANELS

PART 1 GENERAL

1.01 SECTION INCLUDES

A. Wall- and ceiling-mounted access units.

1.02 RELATED REQUIREMENTS

A. Section 099123 - Interior Painting: Field paint finish.

1.03 REFERENCE STANDARDS

1.04 SUBMITTALS

A. See Section 013000 - Administrative Requirements for submittal procedures.

B. Product Data: Provide sizes, types, finishes, hardware, scheduled locations, and details of adjoining work.

C. Project Record Documents: Record actual locations of each access unit.

1.05 QUALITY ASSURANCE

A. Manufacturer Qualifications: Company specializing in manufacturing the products specified in this section with minimum three years documented experience.

B. Installer Qualifications: Company specializing in performing work of the type specified and with at least three years documented experience.

PART 2 PRODUCTS

2.01 ACCESS DOORS AND PANELS ASSEMBLIES

2.02 WALL AND CEILING MOUNTED UNITS

A. Wall- and Ceiling-Mounted Units: Factory-fabricated door and frame, fully assembled units with corner joints welded, filled and ground flush; square and without rack or warp; coordinate requirements with type of installation assembly being used for each unit.
   1. Material: Aluminum.
   2. Style: Exposed frame with door surface flush with frame surface.
      a. Gypsum Board Mounting Criteria: Use drywall bead type frame.
   3. Door Style: Single thickness with rolled or turned in edges.
   4. Heavy-Duty Frames: 14-gauge, 0.0747-inch minimum thickness.
   5. Single Steel Sheet Door Panels: 16-gauge, 0,0625-inch minimum thickness.
   6. Door Panels to Receive Wall/Ceiling Finish: Surface recessed 5/8 inch back from wall face.
   7. Aluminum Finish: Natural brushed.
   8. Hardware:
      a. Hinges for Non-Fire-Rated Units: Concealed, constant force closure spring type.
      b. Handle: Fixed.
      c. Latch/Lock: Cylinder lock-operated cam latch, two keys for each unit.
      d. Number of Locks/Latches Required: As recommended by manufacturer for size of unit.
      e. Inside Latch Release: Mechanism that allows door/panel to be opened from inside.
      f. Gasketing: Extruded neoprene, around perimeter of door panel.

PART 3 EXECUTION

3.01 EXAMINATION

A. Verify that rough openings are correctly sized and located.

3.02 PREPARATION

A. Clean surfaces thoroughly prior to proceeding with this work.

B. Prepare surfaces using methods recommended by manufacturer for applicable substrates in accordance with project conditions.

3.03 INSTALLATION

A. Install units in accordance with manufacturer's instructions.

B. Install frames plumb and level in openings, and secure units rigidly in place.

C. Position units to provide convenient access to concealed equipment when necessary.

END OF SECTION

SECTION 084313
ALUMINUM-FRAMED STOREFRONTS

PART 1 GENERAL

1.01 SECTION INCLUDES

A. Aluminum-framed storefront, with vision glass.

B. Infill panels of metal, glass, and FRP.

C. Weatherstripping.

D. Door hardware.

1.02 RELATED REQUIREMENTS

A. Section 079200 - Joint Sealants: Sealing joints between frames and adjacent construction.

B. Section 081613 - Fiberglas Doors: Exterior and/or interior doors.

C. Section 085113 - Aluminum Windows: Operable sash within glazing system.

D. Section 087100 - Door Hardware: Hardware items other than specified in this section.

E. Section 088000 - Glazing: Glass and glazing accessories.

1.03 REFERENCE STANDARDS

A. AAMA 501.2 - Quality Assurance and Diagnostic Water Leakage Field Check of Installed Storefronts, Curtain Walls, and Sloped Glazing Systems.

B. AAMA 609 & 610 - Cleaning and Maintenance Guide for Architecturally Finished Aluminum.

C. AAMA 611 - Specification for Anodized Architectural Aluminum.

D. AAMA 1503 - Voluntary Test Method for Thermal Transmittance and Condensation Resistance of Windows, Doors and Glazed Wall Sections.

E. AAMA CW-10 - Care and Handling of Architectural Aluminum from Shop to Site.

F. ASTM B209/B209M - Standard Specification for Aluminum and Aluminum-Alloy Sheet and Plate.

G. ASTM B221 - Standard Specification for Aluminum and Aluminum-Alloy Extruded Bars, Rods, Wire, Profiles, and Tubes.

H. ASTM B221M - Standard Specification for Aluminum and Aluminum-Alloy Extruded Bars, Rods, Wire, Profiles, and Tubes (Metric).

I. ASTM E283/E283M - Standard Test Method for Determining Rate of Air Leakage Through Exterior Windows, Skylights, Curtain Walls, and Doors Under Specified Pressure Differences Across the Specimen.

J. ASTM E330/E330M - Standard Test Method for Structural Performance of Exterior Windows, Doors, Skylights and Curtain Walls by Uniform Static Air Pressure Difference.

1.04 SUBMITTALS

A. See Section 013000 - Administrative Requirements for submittal procedures.

B. Product Data: Provide component dimensions, describe components within assembly, anchorage and fasteners, glass and infill, internal drainage details.

C. Shop Drawings: Indicate system dimensions, framed opening requirements and tolerances, affected related work, expansion and contraction joint location and details, and field welding required.

D. Manufacturer's Certificate: Certify that the products supplied meet or exceed the specified requirements.

E. Field Quality Control Submittals: Report of field testing for water penetration.

F. Installer's qualification statement.

1.05 QUALITY ASSURANCE

A. Designer Qualifications: Design structural support framing components under direct supervision of a Professional Structural Engineer experienced in design of this Work and licensed in the State in which the Project is located.

B. Manufacturer Qualifications: Company specializing in performing work of type specified and with at least three years of documented experience.

C. Installer Qualifications: Company specializing in performing work of type specified and with at least three years of documented experience and approved by manufacturer.

1.06 DELIVERY, STORAGE, AND HANDLING

A. Handle products of this section in accordance with AAMA CW-10.

B. Protect finished aluminum surfaces with wrapping. Do not use adhesive papers or sprayed coatings that bond to aluminum when exposed to sunlight or weather.

1.07 FIELD CONDITIONS

A. Do not install sealants when ambient temperature is less than 40 degrees F. Maintain this minimum temperature during and 48 hours after installation.

1.08 WARRANTY

A. See Section 017800 - Closeout Submittals for additional warranty requirements.

B. Provide ten year manufacturer warranty against failure of glass seal on insulating glass units, including interpane dusting or misting. Include provision for replacement of failed units.

C. Provide five year manufacturer warranty against excessive degradation of exterior finish. Include provision for replacement of units with excessive fading, chalking, or flaking.

PART 2 PRODUCTS

2.01 MANUFACTURERS

2.02 MANUFACTURERS

A. Aluminum-Framed Storefront :
   1. EFCO Corporation; 403X Series: www.efcocorp.com.
   2. Kawneer North America; 451UT Series: www.kawneer.com.
   3. Manko Window Systems, Inc.; 2450xpt CG Series: www.mankowindows.com.
   4. Oldcastle BuildingEnvelope; 3000 XT Series: www.oldcastlebe.com.
   5. Tubelite, Inc.; TU24000 Series: www.tubeliteinc.com.
   6. Special - Lite Inc.: required at exterior doors
   7. Substitutions: Not permitted.

2.03 ALUMINUM-FRAMED STOREFRONT

A. Aluminum-Framed Storefront: Factory fabricated, factory finished aluminum framing members with infill, and related flashings, anchorage and attachment devices.
   1. Glazing Rabbet: For 1 inch insulating glazing.
   2. Glazing Position: Centered (front to back).
   3. Vertical Mullion Dimensions: 2 inches wide by 4-1/2 inches deep.
   4. Finish:
      a. Factory finish all surfaces that will be exposed in completed assemblies.
      b. Touch-up surfaces cut during fabrication so that no natural aluminum is visible in completed assemblies, including joint edges.
      c. Coat concealed metal surfaces that will be in contact with cementitious materials or dissimilar metals with bituminous paint.
   5. Finish Color: As selected by Architect from a full range of custom colors .
   6. Fabrication: Joints and corners flush, hairline, and weatherproof, accurately fitted and secured; prepared to receive anchors and hardware; fasteners and attachments concealed from view; reinforced as required for imposed loads.

7. Construction: Eliminate noises caused by wind and thermal movement, prevent vibration harmonics, and prevent "stack effect" in internal spaces.
8. System Internal Drainage: Drain to the exterior by means of a weep drainage network any water entering joints, condensation occurring in glazing channel, and migrating moisture occurring within system.
9. Expansion/Contraction: Provide for expansion and contraction within system components caused by cycling temperature range of 170 degrees F over a 12 hour period without causing detrimental effect to system components, anchorages, and other building elements.
10. Movement: Allow for movement between storefront and adjacent construction, without damage to components or deterioration of seals.
11. Perimeter Clearance: Minimize space between framing members and adjacent construction while allowing expected movement.
12. Maintain continuous air barrier and/or vapor retarder seal throughout assembly, primarily in line with inside pane of glazing and inner sheet of infill panel, and heel bead of glazing compound.

B. Performance Requirements
1. Wind Loads: Design and size components to withstand the specified load requirements without damage or permanent set, when tested in accordance with ASTM E330/E330M, using loads 1.5 times the design wind loads and 10 second duration of maximum load.
a. Member Deflection: Limit member deflection to flexure limit of glass in any direction, with full recovery of glazing materials.
2. Air Leakage: 0.06 cfm/sq ft maximum leakage of storefront wall area when tested in accordance with ASTM E283/E283M at 1.57 psf pressure difference.
3. Condensation Resistance Factor of Framing: 50, minimum, measured in accordance with AAMA 1503.

2.04 COMPONENTS

A. Aluminum Framing Members: Tubular aluminum sections, thermally broken with interior section insulated from exterior, drainage holes and internal weep drainage system.
1. Glazing Stops: Flush.

B. Glazing: See Section 088000.

C. Infill Panels: Insulated, aluminum, with edges formed to fit glazing channel and sealed.
1. Total Nominal Thickness: 1 inch.
2. Face Sheet: 1/4 inch thick.
3. Core: Glass fiber insulation core with R-value of ____.
4. Back Sheet: 1/4" inch thick.
5. Finish: Same as storefront.

D. Swing doors, coordinate with FRP doors.

E. Operable Sash: See Section 085113.

2.05 MATERIALS

A. Extruded Aluminum: ASTM B221 (ASTM B221M).

B. Sheet Aluminum: ASTM B209/B209M.

C. Fasteners: Stainless steel.

D. Sill Flashing Sealant: Elastomeric, silicone or polyurethane, compatible with flashing material.

E. Sealant for Setting Thresholds: Non-curing butyl type.

F. Glazing Gaskets: Type to suit application to achieve weather, moisture, and air infiltration requirements.

G. Glazing Accessories: See Section 088000.

2.06 FINISHES

A. Class I Color Anodized Finish: AAMA 611 AA-M12C22A44 Electrolytically deposited colored anodic coating not less than 0.7 mils thick.

B. Color: As selected by Architect from manufacturer's full range.

C. Touch-Up Materials: As recommended by coating manufacturer for field application.

2.07 HARDWARE

A. For each door, include weatherstripping and sill sweep strip.

B. Door Hardware: As specified in Section 087100 and Section 081613.

C. Weatherstripping: Wool pile, continuous and replaceable; provide on all exterior doors.

D. Sill Sweep Strips: Resilient seal type, retracting, of neoprene; provide on all exterior doors.

E. Threshold: Extruded aluminum, one piece per door opening, ribbed surface; provide on all doors.

PART 3 EXECUTION

3.01 EXAMINATION

A. Verify dimensions, tolerances, and method of attachment with other work.

B. Verify that storefront wall openings and adjoining water-resistive and/or air barrier seal materials are ready to receive work of this section.

3.02 INSTALLATION

A. Install wall system in accordance with manufacturer's instructions.

B. Attach to structure to permit sufficient adjustment to accommodate construction tolerances and other irregularities.

C. Provide alignment attachments and shims to permanently fasten system to building structure.

D. Align assembly plumb and level, free of warp or twist. Maintain assembly dimensional tolerances, aligning with adjacent work.

E. Provide thermal isolation where components penetrate or disrupt building insulation.

F. Install sill flashings. Turn up ends and edges; seal to adjacent work to form water tight dam.

G. Where fasteners penetrate sill flashings, make watertight by seating and sealing fastener heads to sill flashing.

H. Pack fibrous insulation in shim spaces at perimeter of assembly to maintain continuity of thermal barrier.

I. Install operating sash.

J. Install hardware using templates provided.
   1. See Section 087100 for hardware installation requirements.

K. Touch-up minor damage to factory applied finish; replace components that cannot be satisfactorily repaired.

3.03 TOLERANCES

A. Maximum Variation from Plumb: 0.06 inch per 3 feet non-cumulative or 0.06 inch per 10 feet, whichever is less.

B. Maximum Misalignment of Two Adjoining Members Abutting in Plane: 1/32 inch.

3.04 FIELD QUALITY CONTROL

A. See Section 014000 - Quality Requirements for general testing and inspection requirements.

B. Water-Spray Test: Contractor to provide water spray quality test of installed storefront components in accordance with AAMA 501.2 during construction process and before installation of interior finishes.

1. Perform final tests in each designated area of installation.

C. Repair or replace storefront components that have failed designated field testing, and retest to verify performance complies with specified requirements.

3.05 ADJUSTING

A. Adjust operating hardware and sash for smooth operation.

3.06 CLEANING

A. Remove protective material from pre-finished aluminum surfaces.

B. Wash down surfaces with a solution of mild detergent in warm water, applied with soft, clean wiping cloths, and take care to remove dirt from corners and to wipe surfaces clean.

C. Upon completion of installation, thoroughly clean aluminum surfaces in accordance with AAMA 609 & 610.

3.07 PROTECTION

A. Protect installed products from damage until Date of Substantial Completion.

END OF SECTION

This page intentionally left blank

SECTION 085113
ALUMINUM WINDOWS

PART 1 GENERAL

1.01 SECTION INCLUDES

A. Extruded aluminum windows with fixed sash and operating sash.

B. Factory glazing.

C. Operating hardware.

D. Insect screens.

1.02 RELATED REQUIREMENTS

A. Section 072500 - Weather Barriers: Sealing frame to water-resistive barrier installed on adjacent construction.

B. Section 088000 - Glazing.

1.03 REFERENCE STANDARDS

A. AAMA 609 & 610 - Cleaning and Maintenance Guide for Architecturally Finished Aluminum.

B. AAMA 611 - Specification for Anodized Architectural Aluminum.

C. AAMA 1503 - Voluntary Test Method for Thermal Transmittance and Condensation Resistance of Windows, Doors and Glazed Wall Sections.

D. AAMA CW-10 - Care and Handling of Architectural Aluminum from Shop to Site.

E. AAMA/WDMA/CSA 101/I.S.2/A440 - North American Fenestration Standard/Specification for Windows, Doors, and Skylights.

F. ASTM B221 - Standard Specification for Aluminum and Aluminum-Alloy Extruded Bars, Rods, Wire, Profiles, and Tubes.

G. ASTM B221M - Standard Specification for Aluminum and Aluminum-Alloy Extruded Bars, Rods, Wire, Profiles, and Tubes (Metric).

H. ASTM F588 - Standard Test Methods for Measuring the Forced Entry Resistance of Window Assemblies, Excluding Glazing Impact.

1.04 SUBMITTALS

A. See Section 013000 - Administrative Requirements for submittal procedures.

B. Product Data: Include component dimensions, information on glass and glazing, internal drainage details, and descriptions of hardware and accessories.

C. Shop Drawings: Indicate opening dimensions, elevations of different types, framed opening tolerances, method for achieving air and vapor barrier seal to adjacent construction, anchorage locations, hardware, accessories, and installation requirements.

D. Grade Substantiation: Prior to submitting shop drawings or starting fabrication, submit one of the following showing compliance with specified grade:
   1. Evidence of AAMA Certification.
   2. Evidence of WDMA Certification.
   3. Evidence of CSA Certification.
   4. Test report(s) by independent testing agency itemizing compliance and acceptable to authorities having jurisdiction.

E. Test Reports: Prior to submitting shop drawings or starting fabrication, submit test report(s) by independent testing agency showing compliance with performance requirements in excess of those prescribed by specified grade.

1.05 QUALITY ASSURANCE

A. Manufacturer Qualifications: Company specializing in manufacturing products specified in this section with minimum three years of documented experience.

B. Installer Qualifications: Company specializing in performing work of type specified and with at least three years of documented experience and approved by manufacturer.

1.06 DELIVERY, STORAGE, AND HANDLING

A. Comply with requirements of AAMA CW-10.

B. Protect finished surfaces with wrapping paper or strippable coating during installation. Do not use adhesive papers or sprayed coatings that bond to substrate when exposed to sunlight or weather.

1.07 FIELD CONDITIONS

A. Do not install sealants when ambient temperature is less than 40 degrees F.

B. Maintain this minimum temperature during and 24 hours after installation of sealants.

1.08 WARRANTY

A. See Section 017800 - Closeout Submittals for additional warranty requirements.

PART 2 PRODUCTS

2.01 MANUFACTURERS

A. Manufacturers - Aluminum Windows:
   1. EFCO, a Pella Company; 2700 Series: www.efcocorp.com.
   2. Graham Architectural Products 6500 Series: www.grahamwindow.com
   3. Kawneer 8225TL Series: www.kawneer.com
   4. Manko Window Systems, Inc; 800 Series: www.mankowindows.com.
   5. YKK AP America Inc; YOW 225 TU Series: www.ykkap.com.
   6. Winco Ventilator Co; 1150 Series: www.winco.com
   7. Tubelite; 3700 Series www.tubeliteinc.com.
   8. Oldcastle BuildingEnvelope; Signature Series 12PL; www.obe.com
   9. Substitutions: Not permitted.

2.02 ALUMINUM WINDOWS

A. Aluminum Windows: Extruded aluminum frame and sash, factory fabricated, factory finished, with operating hardware, related flashings, and anchorage and attachment devices.
   1. Frame Depth: 2-1/4 inches.
   2. Operable Units: Double weatherstripped.
   3. Provide factory-glazed units.
   4. Fabrication: Joints and corners flush, hairline, and weatherproof, accurately fitted and secured; prepared to receive anchors; fasteners and attachments concealed from view; reinforced as required for operating hardware and imposed loads.
   5. Perimeter Clearance: Minimize space between framing members and adjacent construction while allowing expected movement.
   6. Movement: Accommodate movement between window and perimeter framing and deflection of lintel, without damage to components or deterioration of seals.
   7. System Internal Drainage: Drain to the exterior by means of a weep drainage network any water entering joints, condensation occurring in glazing channel, and migrating moisture occurring within system.
   8. Thermal Movement: Design to accommodate thermal movement caused by 180 degrees F surface temperature without buckling stress on glass, joint seal failure, damaging loads on structural elements, damaging loads on fasteners, reduction in performance or other detrimental effects.

B. Fixed, Non-Operable Type:

1. Construction: Thermally broken.
2. Glazing: Double; clear; low-e.
3. Exterior Finish: Class I natural anodized.
4. Interior Finish: Class I natural anodized.

C. Outswinging Hopper Type:
1. Construction: Thermally broken.
2. Provide screens.
3. Glazing: Double; clear; low-e.
4. Exterior Finish: Class I natural anodized.
5. Interior Finish: Class I natural anodized.

2.03 PERFORMANCE REQUIREMENTS

A. Grade: AAMA/WDMA/CSA 101/I.S.2/A440 requirements for specific window type:
1. Performance Class (PC): CW.
2. Performance Grade (PG): Equivalent to or greater than specified design pressure.

B. Design Pressure (DP): In accordance with applicable codes.

C. Member Deflection: Limit member deflection to flexure limit of glass in any direction, with full recovery of glazing materials.

D. Condensation Resistance Factor of Frame: 50, measured in accordance with AAMA 1503.

E. Overall Thermal Transmittance (U-value): 0.35, maximum, including glazing, measured on window sizes required for this project.

F. Forced Entry Resistance: Tested to comply with ASTM F588 requirements for performance level of Grade 10 for specific window style required.

2.04 COMPONENTS

A. Frames: 2-1/4 inch wide by 2-1/4 inch deep profile, of 0.125 inch thick section; thermally broken with interior portion of frame insulated from exterior portion; flush glass stops of snap-on type.

B. Insect Screens: Extruded aluminum frame with mitered and reinforced corners; screen mesh taut and secure to frame; secured to window with adjustable hardware allowing screen removal without use of tools.
1. Hardware: Spring loaded steel pins; four per screen unit.
2. Screen Mesh: Vinyl-coated fiberglass, window manufacturer's standard mesh.
3. Frame Finish: Same as frame and sash.

C. Operable Sash Weatherstripping: Wool pile; permanently resilient, profiled to achieve effective weather seal.

D. Fasteners: Stainless steel.

E. Glazing Materials: See Section 088000.

F. Sealant for Setting Sills and Sill Flashing: Non-curing butyl type.

2.05 MATERIALS

A. Extruded Aluminum: ASTM B221 (ASTM B221M), 6063 alloy, T6 temper.

2.06 HARDWARE

A. Sash lock: Lever handle with cam lock.

B. Operator: Lever action handle fitted to projecting sash arms with limit stops.

C. Projecting Sash Arms: Cadmium plated steel, friction pivot joints with nylon bearings, removable pivot clips for cleaning.

D. Window Opening Control Devices (WOCD): Provide operable window sash hardware that limits openings to only allow passage of 4 inch diameter rigid sphere or less, and are easily releasable to fully open without use of keys, tools, or special knowledge.

E. Pulls: Manufacturer's standard type.

F. Bottom Rollers: Stainless steel, adjustable.

G. Limit Stops: Resilient rubber.

2.07 FINISHES

A. Class I Natural Anodized Finish: AAMA 611 AA-M12C22A41, clear anodic coating not less than 0.7 mil thick.

B. Finish Color: As selected by Architect from manufacturer's full range.

C. Apply one coat of bituminous coating to concealed aluminum and steel surfaces in contact with dissimilar materials.

PART 3 EXECUTION

3.01 EXAMINATION

A. Verify that wall openings and adjoining water-resistive barrier materials are ready to receive aluminum windows; see Section 072500.

3.02 PRIME WINDOW INSTALLATION

A. Install windows in accordance with manufacturer's instructions.

B. Attach window frame and shims to perimeter opening to accommodate construction tolerances and other irregularities.

C. Align window plumb and level, free of warp or twist. Maintain dimensional tolerances and alignment with adjacent work.

D. Install sill and sill end angles.

E. Provide thermal isolation where components penetrate or disrupt building insulation. Pack fibrous insulation in shim spaces at perimeter of assembly to maintain continuity of thermal barrier.

F. Install operating hardware not pre-installed by manufacturer.

G. Install glass and infill panels in accordance with requirements; see Section 088000.

3.03 TOLERANCES

A. Maximum Variation from Level or Plumb: 1/16 inches every 3 ft non-cumulative or 1/8 inches per 10 ft, whichever is less.

3.04 ADJUSTING

A. Adjust hardware for smooth operation and secure weathertight closure.

3.05 CLEANING

A. Remove protective material from factory finished aluminum surfaces.

B. Wash surfaces by method recommended and acceptable to window manufacturer; rinse and wipe surfaces clean.

C. Upon completion of installation, thoroughly clean aluminum surfaces in accordance with AAMA 609 & 610.

D. Remove excess glazing sealant by moderate use of mineral spirits or other solvent acceptable to sealant and window manufacturer.

END OF SECTION

SECTION 087100
DOOR HARDWARE

PART 1 GENERAL

1.01 SECTION INCLUDES

A. Hardware for wood and FRP doors.
B. Hardware for fire-rated doors.
C. Electrically operated and controlled hardware.
D. Low Energy Power Automatic Operators
E. Thresholds.
F. Weatherstripping and gasketing.

1.02 RELATED REQUIREMENTS

A. Section 064100 - Architectural Wood Casework: Cabinet hardware.
B. Section 079200 - Joint Sealants: Sealants for setting exterior door thresholds.
C. Section 080671 - Door Hardware Schedule: Schedule of door hardware sets.
D. Section 081113 - Hollow Metal Doors and Frames.
E. Section 081416 - Flush Wood Doors.
F. Section 081613 - Fiberglass Doors.
G. Section 083490 - Tornado-Resistant Assemblies: Tornado doors for storm shelters
H. Section 271000 - Structured Cabling - Wiring for Access Control homerun to data room
I. Section 284600 - Fire Detection and Alarm: Electrical connection to activate door closers.

1.03 REFERENCE STANDARDS

A. BHMA A156.1 - Standard for Butts and Hinges.
B. BHMA A156.2 - Bored and Preassembled Locks and Latches.
C. BHMA A156.3 - Exit Devices.
D. BHMA A156.4 - Door Closers and Pivots.
E. BHMA A156.5 - Cylinders and Input Devices for Locks.
F. BHMA A156.6 - Standard for Architectural Door Trim.
G. BHMA A156.7 - Template Hinge Dimensions.
H. BHMA A156.8 - Door Controls - Overhead Stops and Holders.
I. BHMA A156.13 - Mortise Locks and Latches.
J. BHMA A156.15 - Release Devices - Closer Holder, Electromagnetic and Electromechanical.
K. BHMA A156.16 - Standard for Auxiliary Hardware.
L. BHMA A156.17 - Self Closing Hinges & Pivots.
M. BHMA A156.18 - Standard for Materials and Finishes.
N. BHMA A156.21 - Thresholds.
O. BHMA A156.22 - Standard for Gasketing.
P. BHMA A156.23 - Electromagnetic Locks.
Q. BHMA A156.26 - Standard for Continuous Hinges.
R. BHMA A156.30 - Standard for High Security Cylinders.
S. BHMA A156.31 - Electric Strikes and Frame Mounted Actuators.
T. DHI WDHS.3 - Recommended Locations for Architectural Hardware for Flush Wood Doors.

U. NFPA 80 - Standard for Fire Doors and Other Opening Protectives.

V. UL (DIR) - Online Certifications Directory.

W. UL 437 - Standard for Key Locks.

1.04 ADMINISTRATIVE REQUIREMENTS

A. Coordinate the manufacture, fabrication, and installation of products that door hardware is installed on.

B. Furnish templates for door and frame preparation to manufacturers and fabricators of products requiring internal reinforcement for door hardware.

1.05 SUBMITTALS

A. See Section 013000 - Administrative Requirements for submittal procedures.

B. Product Data: Manufacturer's catalog literature for each type of hardware, marked to clearly show products to be furnished for this project, and includes construction details, material descriptions, finishes, and dimensions and profiles of individual components.

C. Shop Drawings - Door Hardware Schedule: Submit detailed listing that includes each item of hardware to be installed on each door. Use door numbering scheme as included in Contract Documents.
   1. Prepared by or under supervision of Architectural Hardware Consultant (AHC).
   2. Provide complete description for each door listed.

D. Shop Drawings - Electrified Door Hardware: Submit diagrams for power, signal, and control wiring for electrified door hardware that include details of interface with building safety and security systems. Provide elevations and diagrams for each electrified door opening as follows:
   1. Prepared by or under supervision of Architectural Hardware Consultant (AHC) and Electrified Hardware Consultant (EHC).
   2. Elevations: Submit front and back elevations of each door opening showing electrified devices with connections installed and an operations narrative describing how opening operates from either side at any given time.
   3. Diagrams: Submit point-to-point wiring diagram that shows each device in door opening system with related colored wire connections to each device.

1.06 QUALITY ASSURANCE

A. Manufacturer Qualifications: Company specializing in manufacturing products specified in this section with minimum five years of documented experience.

B. Installer Qualifications: Company specializing in performing work of the type specified for commercial door hardware with at least five years of documented experience.

1.07 INSPECTION AND TESTING

A. Submit a written report of the results of functional testing and inspection for fire door assemblies, in compliance with NFPA 80.
   1. Written report to be provided to the Owner and be made available to the Authority Having Jurisdiction (AHJ).
   2. Report to include the door number for each fire door assembly, door location, door and frame material, fire rating, and summary of deficiencies.

1.08 DELIVERY, STORAGE, AND HANDLING

A. Package hardware items individually; label and identify each package with door opening code to match door hardware schedule.

1.09 WARRANTY

A. See Section 017800 - Closeout Submittals for additional warranty requirements.

B. Manufacturer's Warranty: Provide warranty against defects in material and workmanship for period indicated. Complete forms in Owner's name and register with manufacturer.
   1. Closers: Five years, minimum.

2. Exit Devices: Three years, minimum.
3. Locksets and Cylinders: Three years, minimum.
4. Other Hardware: Two years, minimum.

PART 2 PRODUCTS

2.01 HINGES

A. Manufacturers:
1. McKinney; an Assa Abloy Group company: www.assaabloydss.com.
2. Hager Companies: www.hagerco.com.
3. Models:
a. Interior doors 36" wide and less, standard weight steel:
1) Hager, BB1279.
b. Swing clear at double egress, heavy weight steel:
1) Hager, BB1262.
c. Corrosive area doors 36" wide and less, standard weight stainless steel:
1) Hager, BB1191.

B. Substitutions: Not permitted.

C. Hinges: Comply with BHMA A156.1, Grade 1.
1. Self Closing Hinges: Comply with BHMA A156.17.
2. Butt Hinges: Comply with BHMA A156.1 and BHMA A156.7 for templated hinges.
a. Provide hinge width required to clear surrounding trim.
3. Continuous Hinges: Comply with BHMA A156.26.
4. Provide hinges on every swinging door.
5. Provide five-knuckle full mortise butt hinges unless otherwise indicated.
6. Provide ball-bearing hinges at each door with closer.
7. Provide non-removable pins on exterior outswinging doors.
8. Provide power transfer hinges where electrified hardware is mounted in door leaf.
9. Provide following quantity of butt hinges for each door:
a. Doors up to 60 inches High: Two hinges.
b. Doors From 60 inches High up to 90 inches High: Three hinges.
c. Doors 84 inches High and over: Butt hinges not allowed, use continuous gear type hinge.
d. Doors 36 inches Wide and over: Butt hinges not allowed, use continuous gear type hinge.

2.02 HINGES, CONTINUOUS GEAR TYPE

A. Manufacturers:
1. Assa Abloy- McKinney or Pemko: www.assaabloydss.com.
2. Hager Companies Roton: www.hagerco.com.
3. Models:
a. For new frames:
1) McKinney, MCK-25HD: only use on wired card readers
2) Roton, 780-224HD
b. For retrofits to existing frames:
1) McKinney, MCK-54D: only use on wired card readers
2) Roton, 780-053HD.
4. Substitutions: Not permitted.

2.03 FLUSHBOLTS AND COORDINATORS

A. Manufacturers:
1. Rockwood, an Assa Abloy Group company: www.assaabloydss.com.
2. Hager Companies: www.hagerco.com.
3. Ives, an Allegion brand: www.allegion.com/us.

4. Trimco: www.trimcohardware.com.
5. Models:
    a. Automatic at hollow metal door:
        1) Ives, FB31P.
        2) Rockwood, 2842.
        3) Trimco, 3810.
        4) Hager 292D
    b. Manual at hollow metal door:
        1) Ives, FB358.
        2) Rockwood, 550.
        3) Trimco, 3917.
        4) Hager 282D
6. Substitutions: Not permitted.

B. Flush Bolts: Comply with BHMA A156.16, Grade 1.
1. Flush Bolt Throw: 3/4 inch, minimum.
2. Provides extension bolts in leading edge of door, one bolt into floor, one bolt into top of frame.
    a. Pairs of Swing Doors: At inactive leaves, provide flush bolts of type as required to comply with code.
3. Provide dustproof floor strike for bolt into floor, except at metal thresholds.
4. Automatic Flush Bolts: Automatically latch upon closing of door; automatic retraction of bolts when active leaf is opened; located on inactive leaf of pair of doors.

2.04 EXIT DEVICES

A. Manufacturers:
1. Von Duprin, an Allegion brand: www.allegion.com/us.
2. Models:
    a. Von Duprin, XP99 series, 17 lever type.
3. Substitutions: Not permitted.

B. Exit Devices: Comply with BHMA A156.3, Grade 1.
1. Lever design to match lockset trim.
2. Provide cylinder with cylinder dogging or locking trim.
3. Provide exit devices properly sized for door width and height.
4. Provide strike as recommended by manufacturer for application indicated.
5. Provide less bottom rod (LBR) at scheduled locations to eliminate use of floor mounted strikes.
6. Provide UL (DIR) listed exit device assemblies for fire-rated doors and panic device assemblies for non-fire-rated doors.
7. For electrical options, provide quick connect plug-in pre-wired connectors.

2.05 ACCESS CONTROL LOCKS

A. Manufacturer - Access Control Lock and Exit Device:
1. Assa Abloy Brands; Sargent: www.assaabloydss.com.
2. Must be provided and installed by a manufacturer's certified integrator.
3. Model: 70 IN220 231 BIPS B EK1 NJ-### hardwired application.
    a. ### = hand:
        1) RHR is right hand reversed.
        2) LHR is left hand reversed.
    b. Coordinate wiring connection for access control device installed from each device location back to the data panel in the nearest MDF or IDF room.
        1) Final connections at patch panel to be provided by the Owner.
    c. Access Control programming is to be provided by the Owner.

B. Manufacturer - Exterior Trim

2.06 ELECTRIC STRIKES

A. Manufacturers:
   1. HES; an Assa Abloy Group company: www.assaabloydss.com.
   2. Models:
      a. For cylindrical locksets:
         1) HES, 1006.
      b. For rim exit device:
         1) HES, 9600.
   3. Substitutions: Not permitted.

B. Electric Strikes: Comply with BHMA A156.31, Grade 1.
   1. Provide UL (DIR) listed burglary-resistant electric strike; style to suit locks.
   2. Provide non-handed 24 VDC electric strike suitable for door frame material and scheduled lock configuration.
   3. Provide field selectable Fail Safe/Fail Secure modes.
   4. Provide transformer and rectifier as necessary for complete installation.
   5. Connect electric strikes into fire alarm where non-rated doors are scheduled to release with fire or sprinkler alarm condition.

2.07 ELECTROMAGNETIC LOCKS

A. Manufacturers:
   1. Securitron; an Assa Abloy Group company: www.assaabloydss.com.
   2. Substitutions: See Section 016000 - Product Requirements.

B. Electromagnetic Locks: Comply with BHMA A156.23, Grade 1.
   1. Holding Force: 600 lbs, minimum.
   2. Voltage: 12 VDC, and provide power supplies by same manufacturer as locks.
   3. Mounting: Surface mounted to door and frame on secure side, with fasteners, brackets, and spacer bars as required for application.

2.08 LOCK CYLINDERS

A. Manufacturers:
   1. Best Access Systems, division of Stanley Access Technologies LLC: www.bestaccess.com.
   2. Substitutions: Not permitted.

B. Lock Cylinders: Provide key access on outside of each lock, unless otherwise indicated.
   1. Provide standard type cylinders, Grade 1, with seven-pin core in compliance with BHMA A156.5 at locations indicated.
   2. Provide high security mechanical type cylinders, Grade 1, with seven-pin core in compliance with BHMA A156.30 or UL 437 at locations indicated.
   3. Provide cylinders from same manufacturer as locking device.
   4. Provide cams and/or tailpieces as required for locking devices.
   5. Within specific Door Sections, when provisions for lock cylinder are being referenced to this Section, provide specified lock cylinder and keyed to building keying system, unless otherwise indicated.
   6. Provide exit only on exterior doors unless scheduled otherwise.

2.09 CYLINDRICAL LOCKS

A. Manufacturers:
   1. Best Access Systems, division of Stanley Access Technologies LLC: www.bestaccess.com.
   2. Model: Series 9K37-[*Function*]-14LS3626
   3. Substitutions: Not permitted.

B. Cylindrical Locks (Bored): Comply with BHMA A156.2, Grade 1, 4000 Series.
   1. Bored Hole: 2-1/8 inch diameter.

2. Latchbolt Throw: 1/2 inch, minimum.
3. Backset: 2-3/4 inch unless otherwise indicated.
4. Strikes: Provide manufacturer's standard strike for each latchset or lockset with strike box and curved lip extending to protect frame in compliance with indicated requirements.
    a. Finish: To match lock or latch.
5. Provide a lock for each door, unless otherwise indicated that lock is not required.
6. Provide an intruder lockset for swinging door where hardware set is not indicated.
7. Trim: Provide lever handle or pull trim on outside of each lock, unless otherwise indicated.

2.10 MORTISE LOCKS

A. Manufacturers:
    1. Best Access Systems, division of Stanley Access Technologies LLC; [Series 45H7-Function -14S626- [Door Hand]-LC.]: www.bestaccess.com.
    2. Substitutions: Not permitted.

B. Mortise Locks: Comply with BHMA A156.13, Grade 1, Security, 1000 Series.
    1. Latchbolt Throw: 3/4 inch, minimum.
    2. Deadbolt Throw: 1 inch, minimum.
    3. Backset: 2-3/4 inch unless otherwise indicated.
    4. Strikes: Provide manufacturer's standard strike for each latchset or lockset with strike box and curved lip extending to protect frame in compliance with indicated requirements.
        a. Finish: To match lock or latch.

2.11 DOOR PULLS AND PUSH PLATES

A. Manufacturers:
    1. Rockwood or McKinney; an Assa Abloy Group company: www.assaabloydss.com.
    2. Hager Companies: www.hagerco.com.
    3. Trimco: www.trimcohardware.com.
    4. Models:
        a. Push Plate:
            1) McKinney, P054.
            2) Rockwood, 70E.
            3) Trimco, 1001-9
            4) Hager 30S
        b. Pull Plate:
            1) McKinney, DP803
            2) Rockwood, 111 x 70C
            3) Trimco, 1018-3B
            4) Hager 33G
    5. Substitutions: Not permitted.

B. Door Pulls and Push Plates: Comply with BHMA A156.6.
    1. Pull Type: Straight, unless otherwise indicated.
    2. Push Plate Type: Flat, with square corners, unless otherwise indicated.
        a. Edges: Beveled, unless otherwise indicated.
    3. Material: Stainless steel, unless otherwise indicated.
    4. Provide door pulls and push plates on doors without a lockset, latchset, exit device, or auxiliary lock unless otherwise indicated.
    5. On solid doors, provide matching door pull and push plate on opposite faces.

2.12 COORDINATORS

A. Manufacturers:
    1. Ives, an Allegion brand: www.allegion.com/us.
    2. Trimco: www.trimcohardware.com.
    3. Hager Companies; www.hagerco.com.

4. Models:
    a. Ives, CORG
    b. Trimco, 3093
    c. Hager 298D
5. Substitutions: Not permitted.

B. Coordinators: Provide on doors having closers and self-latching or automatic flush bolts to ensure that inactive door leaf closes before active door leaf.
1. Type: Bar, unless otherwise indicated.
2. Material: Stainless steel, unless otherwise indicated.
3. Ensure that coordination of other door hardware affected by placement of coordinators and carry bar is applied properly for completely operable installation.

2.13 CLOSERS

A. Manufacturers; Surface Mounted:
1. Norton; an Assa Abloy Group company: www.assaabloydss.com.
2. LCN, an Allegion brand: www.allegion.com/us/#sle.
3. Models:
    a. Interior doors with multi-size tri-style packaging:
        1) Norton, 7500
        2) LCN, 4040XP
    b. Exterior doors with heavy duty non-hold open parallel arm with spring-stop:
        1) Norton, 7500 CPS
        2) LCN, 4040XP-CUSH
4. Substitutions: Not permitted.

B. Closers: Comply with BHMA A156.4, Grade 1.
1. Type: Surface mounted to door.
2. Provide door closer on each exterior door.
3. Provide door closer on each fire-rated and smoke-rated door.
    a. Spring hinges are not an acceptable self-closing device, unless otherwise indicated.
4. Where an overlapping astragal is included on pairs of swinging doors, provide coordinator to ensure door leaves close in proper order.
5. At corridor entry doors, mount closer on room side of door.
6. At outswinging exterior doors, mount closer on interior side of door.

2.14 LOW ENERGY POWER AUTOMATIC OPERATORS

A. Electrified Atomatic Operators: ADA compliant type.

B. Provide wireless wall mounted actuators by same manufacturer.

C. Provide weather resistant actuators for exterior locations.

D. Operator motor voltage shall be 120 VAC.

E. Provide extended cover over operator at double door openings.

F. Provide ADA accessible symbols engraved on actuators and stickers on doors in accordance with ANSI A-117.1.

G. Manufacturers:
1. Assa Abloy: www.assaabloy.com
2. Models:
    a. Assa Abloy, Besam SW200i.
3. Substitutions: Not permitted.

2.15 OVERHEAD STOPS AND HOLDERS

A. Manufacturers:
1. Rixson or Sargent; an Assa Abloy Group company: www.assaabloydss.com/#sle.

2. Glynn-Johnson, an Allegion brand: www.allegion.com/us/#sle.
3. Hager Companies: www.hagerco.com.
4. Models:
    a. Heavy duty surface:
        1) Rixson, 9.
        2) Sargent, 590.
        3) Glynn-Johnson, 90.
        4) Hager 70 Series SRF
    b. Heavy duty concealed:
        1) Rixson, 1.
        2) Sargent, 690.
        3) Glynn-Johnson, 100.
        4) Hager 70 Series CON
5. Substitutions: Not permitted.

B. Overhead Stops and Holders (Door Checks): Comply with BHMA A156.8, Grade 1.
1. Provide stop for every swinging door, unless otherwise indicated.
2. Stop is not required if positive stop feature is specified for door closer; positive stop feature of door closer is not an acceptable substitute for a stop, unless otherwise indicated.

2.16 PROTECTION PLATES

A. Protection Plates: Comply with BHMA A156.6.

B. Edges: Beveled, on four sides unless otherwise indicated.

C. Fasteners: Countersunk screw fasteners.

D. Provide clear anti-microbial coating that is silver ion-based.

E. Drip Guard: Provide at head of exterior doors unless covered by roof or canopy.
1. Manufacturers - Drip Guard:
    a. Assa Abloy McKinney or Pemko: www.assaabloydss.com.
    b. National Guard Products, Inc: www.ngpinc.com.
    c. Models:
        1) McKinney, MCK346C.
        2) National Guard, 16AD.
        3) Pemko, 346C.
    d. Substitutions: See Section 016000 - Product Requirements

2.17 KICK PLATES

A. Manufacturers:
1. Trimco: www.trimcohardware.com.
2. McKinney or Rockwood an Assa Abloy Company: www.assaabloydss.com
3. Hager Companies: www.hagerco.com
4. Models:
    a. McKinney, KP50.
    b. Rockwood, K1050.
    c. Hager 194S
    d. Trimco, K0050.
5. Substitutions: Not permitted.

B. Kick Plates: Provide along bottom edge of push side of every door with closer, except aluminum storefront and glass entry doors, unless otherwise indicated.
1. Thickness: 0.050 inch minimum.
2. Height: 10 inches unless otherwise indicated.
3. Width:

a. Single doors: 1-1/2 inch less than door width on frame stop face and 1 inch less than door width on opposite face.
b. Double doors: 1 inch less than door width on both faces of each door.

4. Bevel all four edges and countersink holes for fasteners.
5. Provide UL listed kickplates where required on fire-rated doors.

2.18 ELECTROMAGNETIC DOOR HOLDERS

A. Manufacturers:
1. Rixson; an Assa Abloy Group company: www.assaabloydss.com.
2. Hager Companies: www.hagerco.com.
3. Models:
a. Wall mount doors with lever:
1) Rixson, 998.
2) Hager, 380F
b. Wall mount double door egress openings:
1) Rixson, 990.
2) Hager, 380S
c. Floor mount:
1) Rixson, 980.
2) Hager, 380G
4. Substitutions: See Section 016000 - Product Requirements.

B. Electromagnetic Door Holders: Comply with BHMA A156.15.
1. Type: Wall mounted, single unit, standard duty, with strike plate attached to door.
2. Holding Force, Standard Duty: 40 lbs-force, minimum.
3. Voltage: 12 VDC, and provide power supplies by same manufacturer as holders.
4. Fail safe; door released to close automatically when electrical current is interrupted.
5. Provide interface with fire detectors and fire-alarm system for fire-rated door assemblies.

2.19 WALL STOPS

A. Manufacturers:
1. Rockwood or McKinney; an Assa Abloy Group company: www.assaabloydss.com.
2. Hager Companies: www.hagerco.com.
3. Trimco: www.trimcohardware.com.
4. Ives, an Allegion brand: www.allegion.com/us.
5. Models:
a. Wall Stop:
1) McKinney, WS04.
2) Rockwood, 403.
3) Hager, 232W
4) Trimco, 1276CCS.
5) Ives, WS402CCV.
6. Substitutions: See Section 016000 - Product Requirements.

B. Wall Stops: Comply with BHMA A156.16, Grade 1 and Resilient Material Retention Test as described in this standard.
1. Provide wall stops to prevent damage to wall surface upon opening door.
2. Type: Bumper, concave, wall stop.
3. Material: Stainless steel housing with rubber insert.

2.20 ASTRAGALS

A. Manufacturers:
1. Pemko; an Assa Abloy Group company: www.assaabloydss.com.
2. Hager Companies: www.hagerco.com.
3. National Guard Products, Inc: www.ngpinc.com.

4. Substitutions: See Section 016000 - Product Requirements.

B. Astragals: Comply with BHMA A156.22.
   1. Type: Split, two parts, and with sealing gasket.
   2. Material: Stainless steel.
   3. Provide non-corroding fasteners at exterior locations.

2.21 THRESHOLDS

A. Manufacturers:
   1. Pemko or McKinney; an Assa Abloy Group company: www.assaabloydss.com.
   2. National Guard Products, Inc: www.ngpinc.com.
   3. Models:
   4. Substitutions: See Section 016000 - Product Requirements.

B. Thresholds: Comply with BHMA A156.21.
   1. Provide threshold at each exterior door, unless otherwise indicated.
   2. Type: Flat surface.
   3. Material: Aluminum.
   4. Threshold Surface: Fluted horizontal grooves across full width.
   5. Field cut threshold to profile of frame and width of door sill for tight fit.
   6. Provide non-corroding fasteners at exterior locations.

2.22 WEATHERSTRIPPING AND GASKETING

A. Manufacturers:
   1. Pemko or McKinney; an Assa Abloy Group company: www.assaabloydss.com.
   2. Hager Companies: www.hagerco.com/#sle.
   3. National Guard Products, Inc: www.ngpinc.com/#sle.
   4. Gasketing: Weather type
      a. Models:
         1) Door bottom sweeps:
            (a) McKinney, MCK358CN.
            (b) National Guard, 202NA.
            (c) Pemko, 368CN.
         2) Frame gasket:
            (a) Hager, 891SV-DBA
            (b) McKinney, MCK2891APK.
            (c) National Guard, 700 NA.
            (d) Pemko, 2891APK.
   5. Substitutions: See Section 016000 - Product Requirements.

B. Weatherstripping and Gasketing: Comply with BHMA A156.22.
   1. Head and Jamb Type: Adjustable.
   2. Door Sweep Type: Encased in retainer.
   3. Material: Aluminum, with brush weatherstripping.
   4. Provide frame-applied intumescent gasketing on wood doors that are labeled as smoke and draft control doors (Indicated as "S" on Drawings), unless otherwise indicated.
   5. See Section 08 1416 when wood door to frame sealing system is applied by door manufacturer.
   6. Provide weatherstripping on each exterior door at head, jambs, and meeting stiles of door pairs, unless otherwise indicated.
   7. Provide door bottom sweep on each exterior door, unless otherwise indicated.
   8. Provide sound-rated gasketing and automatic door bottom on doors indicated as "Sound-Rated", "Acoustical", or with "Sound Transmission Class (STC) rating"; fabricate as continuous gasketing, do not cut or notch gasketing material.

2.23 SILENCERS

A. Manufacturers:
   1. Ives, an Allegion brand: www.allegion.com/us.
   2. Rockwood; an Assa Abloy Group company: www.assaabloydss.com.
   3. Substitutions: See Section 016000 - Product Requirements.

B. Silencers: Provide at equal locations on door frame to mute sound of door's impact upon closing.
   1. Single Door: Provide three on strike jamb of frame.
   2. Pair of Doors: Provide two on head of frame, one for each door at latch side.
   3. Material: Rubber, gray color.

2.24 FINISHES

A. Finishes: Provide door hardware of same finish, unless otherwise indicated.
   1. Primary Finish: 626; satin chromium plated over nickel, with brass or bronze base material (former US equivalent US26D); BHMA A156.18.
   2. Secondary Finish: as follows:; BHMA A156.18.
      a. For exit devices only, finish is to be US28.
      b. For continuous gear hinges, finish is to be dark bronze anodized US20 for interior doors and exterior doors with dark bronze frames or US28 for exterior doors with clear anodized aluminum frames.
   3. Exceptions:
      a. Where base material metal is specified to be different, provide finish that is an equivalent appearance in accordance with BHMA A156.18.
      b. Hinges for Fire-Rated Doors: Steel base material with painted finish, in compliance with NFPA 80.

PART 3 EXECUTION

3.01 EXAMINATION

A. Verify that doors and frames are ready to receive this work; labeled, fire-rated doors and frames are properly installed, and dimensions are as indicated on shop drawings.

3.02 INSTALLATION

A. Install hardware in accordance with manufacturer's instructions and applicable codes.

B. Install hardware on fire-rated doors and frames in accordance with applicable codes and NFPA 80.

C. Use templates provided by hardware item manufacturer.

D. Do not install surface mounted items until application of finishes to substrate are fully completed.

E. Door Hardware Mounting Heights: Distance from finished floor to center line of hardware item. unless otherwise noted in the Schedule:.
   1. For Wood Doors: Install in compliance with DHI WDHS.3 recommendations.
   2. For FRP doors: Comply with DHI "Recommended Locations for Architectural Hardware for Steel Doors and Frames" or as recommended by the manufacturer.

F. Set exterior door thresholds with full-width bead of elastomeric sealant at each point of contact with floor providing a continuous weather seal; anchor thresholds with stainless steel countersunk screws.

3.03 FIELD QUALITY CONTROL

A. Perform field inspection and testing under provisions of Section 014000 - Quality Requirements.

B. Inspection and Testing

1. Provide functional testing and inspection of fire door assemblies by a qualified person in accordance with NFPA 80.
2. Schedule fire door assembly inspection within 90 days of Substantial Completion of the Project.
3. Submit a signed, written final report as specified in Paragraph 1.07.A.
4. Correct all deficiencies and schedule a reinspection of fire door assemblies noted as deficient on the inspection report.

3.04 ADJUSTING

A. Adjust work under provisions of Section 017000 - Execution and Closeout Requirements.

B. Adjust hardware for smooth operation.

C. Adjust gasketing for complete, continuous seal; replace if unable to make complete seal.

3.05 CLEANING

A. Clean finished hardware in accordance with manufacturer's written instructions after final adjustments have been made.

B. Clean adjacent surfaces soiled by hardware installation.

C. Replace items that cannot be cleaned to manufacturer's level of finish quality at no additional cost.

D. See Section 017419 - Construction Waste Management and Disposal for additional requirements.

3.06 PROTECTION

A. Protect finished Work under provisions of Section 017000 - Execution and Closeout Requirements.

B. Do not permit adjacent work to damage hardware or finish.

END OF SECTION 087100

SECTION 088000
GLAZING

PART 1 GENERAL

1.01 SECTION INCLUDES

A. Insulating glass units.

B. Glazing units.

C. Laminated glass interlayers.

D. Glazing compounds.

1.02 RELATED REQUIREMENTS

1.03 REFERENCE STANDARDS

A. 16 CFR 1201 - Safety Standard for Architectural Glazing Materials.

B. ANSI Z97.1 - American National Standard for Safety Glazing Materials Used in Buildings - Safety Performance Specifications and Methods of Test.

C. ASCE 7 - Minimum Design Loads and Associated Criteria for Buildings and Other Structures.

D. ASTM C864 - Standard Specification for Dense Elastomeric Compression Seal Gaskets, Setting Blocks, and Spacers.

E. ASTM C920 - Standard Specification for Elastomeric Joint Sealants.

F. ASTM C1036 - Standard Specification for Flat Glass.

G. ASTM C1048 - Standard Specification for Heat-Strengthened and Fully Tempered Flat Glass.

H. ASTM C1172 - Standard Specification for Laminated Architectural Flat Glass.

I. ASTM C1193 - Standard Guide for Use of Joint Sealants.

J. ASTM C1376 - Standard Specification for Pyrolytic and Vacuum Deposition Coatings on Flat Glass.

K. ASTM E1300 - Standard Practice for Determining Load Resistance of Glass in Buildings.

L. ASTM E2190 - Standard Specification for Insulating Glass Unit Performance and Evaluation.

M. GANA (GM) - GANA Glazing Manual.

N. GANA (LGRM) - Laminated Glazing Reference Manual.

O. GANA (SM) - GANA Sealant Manual.

P. IGMA TM-3000 - North American Glazing Guidelines for Sealed Insulating Glass Units for Commercial & Residential Use.

Q. NFRC 100 - Procedure for Determining Fenestration Product U-factors.

R. NFRC 200 - Procedure for Determining Fenestration Product Solar Heat Gain Coefficient and Visible Transmittance at Normal Incidence.

S. NFRC 300 - Test Method for Determining the Solar Optical Properties of Glazing Materials and Systems.

T. UL 972 - Standard for Burglary Resisting Glazing Material.

1.04 SUBMITTALS

A. See Section 013000 - Administrative Requirements for submittal procedures.

B. Product Data on Insulating Glass Unit and Plastic Film Glazing Types: Provide structural, physical and environmental characteristics, size limitations, special handling and installation requirements.

C. Product Data on Glazing Compounds and Accessories: Provide chemical, functional, and environmental characteristics, limitations, special application requirements, and identify available colors.

D. Warranty Documentation: Submit manufacturer warranty and ensure that forms have been completed in Owner's name and registered with manufacturer.

1.05 QUALITY ASSURANCE

A. Perform Work in accordance with GANA (GM), GANA (SM), GANA (LGRM), and IGMA TM-3000 for glazing installation methods.

B. Manufacturer Qualifications: Company specializing in manufacturing the products specified in this section with minimum three years of documented experience.

C. Installer Qualifications: Company specializing in performing work of the type specified and with at least three years documented experience and approved by manufacturer.

1.06 FIELD CONDITIONS

A. Do not install glazing when ambient temperature is less than 40 degrees F.

B. Maintain minimum ambient temperature before, during and 24 hours after installation of glazing compounds.

1.07 WARRANTY

A. See Section 017800 - Closeout Submittals for additional warranty requirements.

B. Insulating Glass Units: Provide a five (5) year manufacturer warranty to include coverage for seal failure, interpane dusting or misting, including providing products to replace failed units.

C. Laminated Glass: Provide a five (5) year manufacturer warranty to include coverage for delamination, including providing products to replace failed units.

PART 2 PRODUCTS

2.01 MANUFACTURERS

A. Float Glass Manufacturers:
   1. AGC Glass North America, Inc: www.agc-yourglass.com/#sle.
   2. Cardinal Glass Industries: www.cardinalcorp.com.
   3. Guardian Glass, LLC: www.guardianglass.com.
   4. Pilkington North America Inc: www.pilkington.com/na/#sle.
   5. Vitro Architectural Glass (formerly PPG Glass): www.vitroglazings.com/#sle.
   6. Insulite Glass Company: www.insuliteglass.com.

B. Laminated Glass Manufacturers:
   1. Cardinal Glass Industries: www.cardinalcorp.com.
   2. Viracon, Architectural Glass segment of Apogee Enterprises, Inc: www.viracon.com.
   3. Guardian Glass, LLC: www.guardianglass.com.
   4. Insulite Glass Company: www.insuliteglass.com.
   5. Substitutions: See Section 016000 - Product Requirements.

C. Fire-Protection-Rated Glass: Provide products as required to achieve indicated fire-rating period.
   1. Manufacturers:
      a. SAFTIFIRST, a division of O'Keeffe's Inc; SuperClear 45-HS: www.safti.com/#sle.
      b. SCHOTT North America Inc; PYRAN Platinum: www.us.schott.com/#sle.
      c. Technical Glass Products: www.fireglass.com/#sle.
      d. Vetrotech North America; Contraflam 45: www.vetrotechusa.com/#sle.
      e. Substitutions: See Section 016000 - Product Requirements.

2.02 PERFORMANCE REQUIREMENTS - EXTERIOR GLAZING ASSEMBLIES

A. Provide type and thickness of exterior glazing assemblies to support assembly dead loads, and to withstand live loads caused by positive and negative wind pressure acting normal to plane of glass.
   1. Design Pressure: Calculated in accordance with ASCE 7.
   2. Comply with ASTM E1300 for design load resistance of glass type, thickness, dimensions, and maximum lateral deflection of supported glass.
   3. Seismic Loads: Design and size glazing components to withstand seismic loads and sway displacement in accordance with the requirements of ASCE 7.
   4. Provide glass edge support system sufficiently stiff to limit the lateral deflection of supported glass edges to less than 1/175 of their lengths under specified design load.
   5. Glass thicknesses listed are minimum.

B. Weather-Resistive Barrier Seals: Provide completed assemblies that maintain continuity of building enclosure water-resistive barrier, vapor retarder, and/or air barrier.
   1. In conjunction with weather barrier related materials described in other sections, as follows:

C. Thermal and Optical Performance: Provide exterior glazing products with performance properties as indicated. Performance properties are in accordance with manufacturer's published data as determined with the following procedures and/or test methods:
   1. Center of Glass U-Value: Comply with NFRC 100 using Lawrence Berkeley National Laboratory (LBNL) WINDOW 6.3 computer program.
   2. Center of Glass Solar Heat Gain Coefficient (SHGC): Comply with NFRC 200 using Lawrence Berkeley National Laboratory (LBNL) WINDOW 6.3 computer program.
   3. Solar Optical Properties: Comply with NFRC 300 test method.

2.03 GLASS MATERIALS

A. Float Glass: Provide float glass based glazing unless otherwise indicated.
   1. Annealed Type: ASTM C1036, Type I - Transparent Flat, Class 1 - Clear, Quality - Q3.
   2. Kind HS - Heat-Strengthened Type: Complies with ASTM C1048.
   3. Kind FT - Fully Tempered Type: Complies with ASTM C1048.
   4. Fully Tempered Safety Glass: Complies with ANSI Z97.1 or 16 CFR 1201 criteria for safety glazing used in hazardous locations.

B. Laminated Glass: Float glass laminated in accordance with ASTM C1172.
   1. Laminated Safety Glass: Complies with ANSI Z97.1 - Class B or 16 CFR 1201 - Category I impact test requirements.
   2. Polyvinyl Butyral (PVB) Interlayer: 0.060 inch thick, minimum.

C. Laminated Security Glass: Annealed glass laminated in accordance ASTM C1172.
   1. Laminated Security Glass: Complies with applicable performance criteria.
   2. Interlayer: Polyvinyl butyral (PVB), 0.060 inch thick minimum.
   3. Performance Criteria:
      a. Burglary Resistance: Pass UL 972 tests in compliance with level of burglary and forced-entry resistance indicated; Multiple Impact.

2.04 INSULATING GLASS UNITS

A. Insulating Glass Units: Types as indicated.
   1. Durability: Certified by an independent testing agency to comply with ASTM E2190.
   2. Coated Glass: Comply with requirements of ASTM C1376 for pyrolytic (hard-coat) or magnetic sputter vapor deposition (soft-coat) type coatings on flat glass; coated vision glass, Kind CV; coated overhead glass, Kind CO; or coated spandrel glass, Kind CS.
   3. Warm-Edge Spacers: Low conductivity thermoplastic and stainless steel.
      a. Spacer Width: As required for specified insulating glass unit.
   4. Spacer Color: Black.
   5. Edge Seal:

a. Dual-Sealed System: Provide polyisobutylene sealant as primary seal applied between spacer and glass panes, and silicone, polysulfide, or polyurethane sealant as secondary seal applied around perimeter.

6. Color: Black.
7. Purge interpane space with dry air, hermetically sealed.

B. Insulating Glass Units: Vision glass, double glazed.
1. Applications: Exterior glazing unless otherwise indicated.
2. Space between lites filled with argon.
3. Outboard Lite: Annealed float glass, 1/4 inch thick, minimum.
a. Tint: Clear.
b. Coating: Low-E (passive type), on #2 surface.
4. Inboard Lite: Annealed float glass, 1/4 inch thick, minimum.
a. Tint: Clear.
5. Total Thickness: 1 inch.
6. Thermal Transmittance (U-Value), Summer - Center of Glass: 0.27, nominal.
7. Visible Light Transmittance (VLT): 70 percent, nominal.
8. Shading Coefficient: 0.45, nominal.
9. Solar Heat Gain Coefficient (SHGC): 0.41 percent, nominal.
10. Visible Light Reflectance, Outside: 11 percent, nominal.
11. Glazing Method: Dry glazing method, tape and gasket spline.

C. Insulating Security Glass Units: Vision glass, double glazed.
1. Applications: Exterior glazing within 7 feet of grade..
2. Utilize Type IG-1 with following modifications:
a. Outboard Lite: Laminated security glassThickness as required to meet performance requirements

2.05 GLAZING UNITS

A. Monolithic Interior Vision Glazing:
1. Applications: Interior glazing unless otherwise indicated.
2. Glass Type: Annealed float glass.
3. Tint: Clear.
4. Thickness: 1/4 inch, nominal.
5. Visible Light Transmittance (VLT): 70 percent, nominal.
6. Solar Heat Gain Coefficient (SHGC): 0.39 percent, nominal.
7. Visible Light Reflectance, Outside: 11 percent, nominal.

B. Fire-Resistance-Rated Glazing: Type, thickness, and configuration of glazing that contains flame, smoke, and blocks radiant heat, as required to achieve indicated fire-rating period exceeding 45 minutes.
1. Applications:
2. Glass Type: Laminated float glass.
3. Provide products listed by Underwriters Laboratories.
4. Safety Glazing Certification: 16 CFR 1201 Category II.
5. Fire-Resistance-Rating Period: As scheduled.
6. Markings for Fire-Resistance-Rated Glazing Assemblies: Provide permanent markings on fire-resistance-rated glazing in compliance with ICC (IBC), local building code, and authorities having jurisdiction.
a. "W" - meets wall assembly criteria of ASTM E119 or UL 263 fire test standards.
b. "D" - meets fire door assembly criteria of NFPA 252, UL 10B, or UL 10C fire test standards.
c. "H" - meets fire door assembly hose stream test of NFPA 252, UL 10B, or UL 10C fire test standards.

d. "T" - meets temperature rise of not more than 450 degrees F above ambient at end of 30 minutes fire exposure in accordance with NFPA 252, UL 10B, or UL 10C fire test standards.
e. "XXX" - placeholder that represents fire-rating period, in minutes.

7. Manufacturers:
   a. Technical Glass Products; Pilkington Pyrostop 60: www.fireglass.com/#sle.
   b. Substitutions: Not permitted.

C. Monolithic Safety Glazing: Non-fire-rated.
1. Applications:
   a. Glazed lites in doors, except fire doors.
   b. Glazed sidelights to doors, except in fire-rated walls and partitions.
   c. Other locations required by applicable federal, state, and local codes and regulations.
   d. Other locations indicated on drawings.
2. Glass Type: Fully tempered safety glass as specified.
3. Tint: Clear.
4. Thickness: 1/4 inch, nominal.

D. Security Glazing: Laminated glass, 2-Ply.
1. Applications: Locations as indicated on drawings.
2. Tint: Clear.
3. Outer Lite: Annealed glass.
4. Interlayer: Polyvinyl butyral (PVB), thickness as required to meet performance criteria.
5. Inside Lite: Annealed glass.
6. Performance Criteria:
   a. Burglary Resistance: Pass UL 972 tests in compliance with level of burglary and forced-entry resistance indicated; Multiple Impact.
7. Manufacturers:
   a. Manko Window Systems, Inc; EntryGuard: www.mankowindows.com/#sle.
   b. McGrory Glass Inc; DotView by McGrory Glass: www.mcgrory.com/#sle.
   c. School Guard Glass; SG4 Laminated Glass: www.schoolguardglass.com
   d. Substitutions: See Section 016000 - Product Requirements.

2.06 LAMINATED GLASS INTERLAYERS

A. Polyvinyl Butyral (PVB) Interlayer for Laminated Glazing:
1. Functionality: Post-breakage safety and security.
2. Applications:
3. Color: Clear.
4. Thickness: As required for indicated performance of laminated glass application.
5. Manufacturers:
   a. Eastman Chemical Company; Saflex Clear PVB Interlayer: www.saflex.com/#sle.
   b. Substitutions: See Section 016000 - Product Requirements.

2.07 GLAZING COMPOUNDS

A. Butyl Sealant: Single component; ASTM C920 Grade NS Class 12-1/2 Uses M and A, Shore A hardness of 10 to 20; black color.

2.08 ACCESSORIES

A. Setting Blocks: Silicone, with 80 to 90 Shore A durometer hardness; ASTM C864 Option II. Length of 0.1 inch for each square foot of glazing or minimum 4 inch by width of glazing rabbet space minus 1/16 inch by height to suit glazing method and pane weight and area.

B. Spacer Shims: Neoprene, 50 to 60 Shore A durometer hardness; ASTM C864 Option II. Continuous by one half the height of the glazing stop by thickness to suit application, self adhesive on one face.

C. Glazing Tape, Back Bedding Mastic Type: Preformed, butyl-based, 100 percent solids compound with integral resilient spacer rod applicable to application indicated; 5 to 30 cured Shore A durometer hardness; coiled on release paper; black color.
   1. Width: As required for application.
   2. Thickness: As required for application.
   3. Spacer Rod Diameter: As required for application.
   4. Manufacturers:
      a. Pecora Corporation: www.pecora.com.
      b. Tremco Global Sealants: www.tremcosealants.com.

D. Glazing Splines: Resilient silicone extruded shape to suit glazing channel retaining slot; ASTM C864 Option II; color black.

E. Glazing Clips: Manufacturer's standard type.

2.09 SOURCE QUALITY CONTROL

A. See Section 014000 - Quality Requirements for additional requirements.

PART 3 EXECUTION

3.01 VERIFICATION OF CONDITIONS

A. Verify that openings for glazing are correctly sized and within tolerances, including those for size, squareness, and offsets at corners.

B. Verify that the minimum required face and edge clearances are being provided.

C. Verify that surfaces of glazing channels or recesses are clean, free of obstructions that may impede moisture movement, weeps are clear, and support framing is ready to receive glazing system.

D. Verify that sealing between joints of glass framing members has been completed effectively.

E. Proceed with glazing system installation only after unsatisfactory conditions have been corrected.

3.02 PREPARATION

A. Clean contact surfaces with appropriate solvent and wipe dry immediately before glazing. Remove coatings that are not tightly bonded to substrates.

B. Seal porous glazing channels or recesses with substrate compatible primer or sealer.

C. Prime surfaces scheduled to receive sealant where required for proper sealant adhesion.

3.03 INSTALLATION, GENERAL

A. Install glazing in compliance with written instructions of glass, gaskets, and other glazing material manufacturers, unless more stringent requirements are indicated, including those in glazing referenced standards.

B. Install glazing sealants in accordance with ASTM C1193, GANA (SM), and manufacturer's instructions.

C. Do not exceed edge pressures around perimeter of glass lites as stipulated by glass manufacturer.

D. Set glass lites of system with uniform pattern, draw, bow, and similar characteristics.

E. Set glass lites in proper orientation so that coatings face exterior or interior as indicated.

F. Prevent glass from contact with any contaminating substances that may be the result of construction operations such as, and not limited to the following; weld splatter, fire-safing, plastering, mortar droppings, etc.

3.04 INSTALLATION - DRY GLAZING METHOD (TAPE AND GASKET SPLINE GLAZING)

A. Application - Exterior Glazed: Set glazing infills from the exterior of the building.

B. Cut glazing tape to length; install on glazing pane. Seal corners by butting tape and sealing junctions with butyl sealant.

C. Place setting blocks at 1/4 points with edge block no more than 6 inch from corners.

D. Rest glazing on setting blocks and push against fixed stop with sufficient pressure to attain full contact.

E. Install removable stops without displacing glazing spline. Exert pressure for full continuous contact.

F. Carefully trim protruding tape with knife.

3.05 CLEANING

A. See Section 017419 - Construction Waste Management and Disposal, for additional requirements.

B. Remove excess glazing materials from finish surfaces immediately after application using solvents or cleaners recommended by manufacturers.

C. Remove nonpermanent labels immediately after glazing installation is complete.

D. Clean glass and adjacent surfaces after sealants are fully cured.

E. Clean glass on both exposed surfaces not more than 2 days prior to Date of Substantial Completion in accordance with glass manufacturer's written recommendations.

3.06 PROTECTION

A. After installation, mark pane with an 'X' by using removable plastic tape or paste; do not mark heat absorbing or reflective glass units.

B. Remove and replace glass that is damaged during construction period prior to Date of Substantial Completion.

END OF SECTION

This page intentionally left blank

SECTION 088300
MIRRORS

PART 1 GENERAL

1.01 SECTION INCLUDES

A. Glass mirrors.
   1. Tempered safety glass.

1.02 RELATED REQUIREMENTS

A. Section 062000 - Finish Carpentry: Wood mirror frames.

B. Section 102800 - Toilet, Bath, and Laundry Accessories: Metal mirror frames.

1.03 REFERENCE STANDARDS

A. ASTM C1048 - Standard Specification for Heat-Strengthened and Fully Tempered Flat Glass.

B. ASTM C1193 - Standard Guide for Use of Joint Sealants.

C. GANA (GM) - GANA Glazing Manual.

D. GANA (SM) - GANA Sealant Manual.

1.04 SUBMITTALS

A. See Section 013000 - Administrative Requirements, for submittal procedures.

B. Product Data on Mirror Types: Submit structural, physical and environmental characteristics, size limitations, special handling and installation requirements.

C. Product Data on Glazing Compounds: Provide chemical, functional, and environmental characteristics, limitations, special application requirements. Identify available custom colors.

D. Manufacturer's Certificate: Certify that mirrors, meets or exceeds specified requirements.

E. Warranty: Submit manufacturer warranty and ensure that forms have been completed in Owner's name and registered with manufacturer.

1.05 QUALITY ASSURANCE

A. Perform Work in accordance with GANA Glazing Manual and GANA (SM) for glazing installation methods.

B. Fabricate, store, transport, receive, install, and clean mirrors in accordance with manufacturer's recommendations.

1.06 FIELD CONDITIONS

A. Do not install mirrors when ambient temperature is less than 50 degrees F.

B. Maintain minimum ambient temperature before, during and 24 hours after installation of glazing compounds.

1.07 WARRANTY

A. See Section 017800 - Closeout Submittals, for additional warranty requirements.

B. Provide ten year manufacturer warranty for reflective coating on mirrors and replacement of same.

PART 2 PRODUCTS

2.01 MANUFACTURERS

A. Mirrors:
   1. Lenoir Mirror Co; Lenoir Mirror: www.lenoirmirror.com.
   2. Trulite Glass and Aluminum Solutions; Trulite Mirror: www.trulite.com.
   3. Guradian Industries; UltraMirror; www.guardianglass.com
   4. Substitutions: See Section 016000 - Product Requirements.

2.02 MATERIALS

A. Mirror Design Criteria: Select materials and/or provide supports as required to limit mirror material deflection to 1/200, or to the flexure limit of glass, with full recovery of glazing materials, whichever is less.

B. Mirror Glass: Clear, tempered safety glass; ASTM C1048, with copper and silver coatings, and protective overcoating.
   1. Thickness: 1/4 inch.
   2. Size: As indicated on drawings.

2.03 ACCESSORIES

A. Glazing Clips: Manufacturer's standard type.

B. Mirror Attachment Accessories: Stainless steel J-profile channels at top and bottom of mirror. Fabricate top channel to allow the mirror to be lifted up and removed from the wall channels.

C. Mirror Adhesive: Chemically compatible with mirror coating and wall substrate. Adhesive must be secondary and additional to mechanical wall fasteners.

PART 3 EXECUTION

3.01 EXAMINATION

A. Verify that openings for mirrored glazing are correctly sized and within tolerance.

B. Verify that surfaces of mirror frames or recesses are clean, free of obstructions, and ready for installation of mirrors.

3.02 PREPARATION

A. Clean contact surfaces with solvent and wipe dry.

B. Seal porous mirror frames or recesses with substrate compatible primer or sealer. Prime surfaces scheduled to receive sealant.

C. Prepare installation in accordance with ASTM C1193 for solvent release sealants, and install sealant in accordance with manufacturer's instructions.

3.03 INSTALLATION

A. Install mirrors in accordance with manufacturer's recommendations.

B. Set mirrors plumb and level, and free of optical distortion.

C. Set mirrors with edge clearance free of surrounding construction including countertops or backsplashes.

D. Mirrors must be anchored mechanically to wall.

3.04 CLEANING

A. Remove wet glazing materials from finish surfaces.

B. Remove labels, wrapping, etc after work is complete.

C. Clean mirrors and adjacent surfaces.

END OF SECTION

SECTION 090561
COMMON WORK RESULTS FOR FLOORING PREPARATION

PART 1 GENERAL

1.01 SECTION INCLUDES

A. This section applies to floors identified in Contract Documents that are receiving the following types of floor coverings:
   1. Resilient tile and sheet.
   2. Carpet tile.

B. Removal of existing floor coverings.

C. Preparation of existing concrete floor slabs for installation of floor coverings.

D. Patching compound.

E. Remedial floor coatings.

F. Remedial floor treatment.

1.02 RELATED REQUIREMENTS

A. Section 014000 - Quality Requirements: Additional requirements relating to testing agencies and testing.

B. Section 017419 - Construction Waste Management and Disposal: Handling of existing floor coverings removed.

1.03 REFERENCE STANDARDS

A. ASTM C109/C109M - Standard Test Method for Compressive Strength of Hydraulic Cement Mortars (Using 50 mm [2 in.] Cube Specimens).

B. ASTM C472 - Standard Test Methods for Physical Testing of Gypsum, Gypsum Plasters, and Gypsum Concrete.

C. RFCI (RWP) - Recommended Work Practices for Removal of Resilient Floor Coverings.

1.04 SUBMITTALS

A. Floor Covering and Adhesive Manufacturers' Product Literature: For each specific combination of substrate, floor covering, and adhesive to be used; showing:
   1. Moisture and alkalinity (pH) limits and test methods.
   2. Manufacturer's required bond/compatibility test procedure.

B. Adhesive Bond and Compatibility Test Report.

C. Test Reports: For floor leveling, patching compound and remediation materials, provide independent laboratory reports and test results showing negative asbestos containing materials content using Polarized Light Microscopy (PLM) test method.

D. Remedial Materials Product Data: Manufacturer's published data on each product to be used for remediation.
   1. Test reports indicating compliance with specified performance requirements, performed by nationally recognized independent testing agency.
   2. Specimen Warranty: Copy of warranty to be issued by coating manufacturer and certificate of underwriter's coverage of warranty.

1.05 QUALITY ASSURANCE

A. Contractor may perform adhesive and bond test with Contractor's own personnel or hire a testing agency.

B. Remedial Coating Installer Qualifications: Company specializing in performing work of the type specified in this section, trained by or employed by coating manufacturer, and able to provide at least 3 project references showing at least 3 years' experience installing moisture emission coatings.

1.06 DELIVERY, STORAGE, AND HANDLING

A. Deliver, store, handle, and protect products in accordance with manufacturer's instructions and recommendations.

B. Deliver materials in manufacturer's packaging; include installation instructions.

C. Keep materials from freezing.

PART 2 PRODUCTS

2.01 MATERIALS

A. Patching Compound: Floor covering manufacturer's recommended product, suitable for conditions, and compatible with adhesive and floor covering. In the absence of any recommendation from flooring manufacturer, provide a product with the following characteristics:
   1. Cementitious moisture-, mildew-, and alkali-resistant compound, compatible with floor, floor covering, and floor covering adhesive, and capable of being feathered to nothing at edges.
   2. Latex or polyvinyl acetate additions are permitted; gypsum content is prohibited.
   3. Compressive Strength: 3000 psi, minimum, after 28 days, when tested in accordance with ASTM C109/C109M or ASTM C472, whichever is appropriate.
   4. Products:
      a. USG Corporation; Durock Brand Advanced Skim Coat Floor Patch: www.usg.com/#sle.
      b. Substitutions: See Section 016000 - Product Requirements.

B. Remedial Flooring Adhesive: Floor covering manufacturer's recommended product, suitable for the moisture and pH conditions present; low-VOC. In the absence of any recommendation from flooring manufacturer, provide a product recommended by adhesive manufacturer as suitable for substrate and floor covering and for conditions present.

C. Remedial Floor Coating: Single- or multi-layer coating or coating/overlay combination intended by its manufacturer to resist water vapor transmission to degree sufficient to meet flooring manufacturer's emission limits, resistant to the level of alkalinity (pH) found, and suitable for adhesion of flooring without further treatment.
   1. Thickness: As required for application and in accordance with manufacturer's installation instructions.
   2. Products:
      a. ARDEX Engineered Cements; ARDEX MC RAPID: www.ardexamericas.com/#sle.
      b. Floor Seal Technology, Inc; MES 100 with Floor Seal FloorCem SLU: www.floorseal.com/#sle.
      c. Sika Corporation; Sikafloor Moisture Tolerance Epoxy Primer and Sikafloor Self-Leveling Moisture Tolerant Resurfacer: www.sikafloorusa.com/#sle.
      d. UZIN, a division of UFLOOR Systems Inc; Uzin NC-890 Hydro Patch: www.ufloorsystems.com/#sle.
      e. Substitutions: See Section 016000 - Product Requirements.

D. Remedial Floor Treatment: Penetrating, spray-applied, silicate-based product intended by its manufacturer to resist water vapor transmission to degree sufficient to meet flooring manufacturer's emission limits, resistant to the level of alkalinity (pH) found, and suitable for adhesion of flooring without further treatment.

PART 3 EXECUTION

3.01 CONCRETE SLAB PREPARATION

A. Perform following operations in the order indicated:
   1. Existing concrete slabs (on-grade and elevated) with existing floor coverings:
      a. Visual observation of existing floor covering, for adhesion, water damage, alkaline deposits, and other defects.

b. Removal of existing floor covering.
2. Preliminary cleaning.
3. Specified remediation, if required.
4. Patching, smoothing, and leveling, as required.
5. Other preparation specified.
6. Adhesive bond and compatibility test.
7. Protection.

B. Remediations:
1. Active Water Leaks or Continuing Moisture Migration to Surface of Slab: Correct this condition before doing any other remediation; re-test after correction.
2. Excessive Moisture Emission or Relative Humidity: If an adhesive that is resistant to the level of moisture present is available and acceptable to flooring manufacturer, use that adhesive for installation of the flooring; if not, apply remedial floor coating or remedial sheet membrane over entire suspect floor area.
3. Excessive Alkalinity (pH): If remedial floor coating is necessary to address excessive moisture, no additional remediation is required; if not, if an adhesive that is resistant to the level present is available and acceptable to the flooring manufacturer, use that adhesive for installation of the flooring; otherwise, apply a skim coat of specified patching compound over entire suspect floor area.

3.02 REMOVAL OF EXISTING FLOOR COVERINGS

A. Comply with local, State, and federal regulations and recommendations of RFCI (RWP), as applicable to floor covering being removed.

B. Dispose of removed materials in accordance with local, State, and federal regulations and as specified.

3.03 PREPARATION

A. See individual floor covering section(s) for additional requirements.

B. Comply with requirements and recommendations of floor covering manufacturer.

C. Remove sub-floor ridges and bumps.

D. Fill and smooth surface cracks, grooves, depressions, control joints and other non-moving joints, and other irregularities with patching compound.
1. Apply, trowel, and float filler to achieve smooth, flat, hard surface.

E. Do not fill expansion joints, isolation joints, or other moving joints.

F. Prohibit traffic until filler is cured.

3.04 ADHESIVE BOND AND COMPATIBILITY TESTING

A. Comply with requirements and recommendations of floor covering manufacturer.

3.05 APPLICATION OF REMEDIAL FLOOR COATING

A. Comply with requirements and recommendations of coating manufacturer.

3.06 APPLICATION OF REMEDIAL FLOOR TREATMENT

A. Comply with requirements and recommendations of treatment manufacturer.

3.07 INSTALLATION OF REMEDIAL FLOOR SHEET MEMBRANE

A. Install in accordance with sheet membrane manufacturer's instructions.

3.08 PROTECTION

A. Cover prepared floors with building paper or other durable covering.

END OF SECTION

This page intentionally left blank

SECTION 092116
GYPSUM BOARD ASSEMBLIES

PART 1 GENERAL

1.01 SECTION INCLUDES

A. Performance criteria for gypsum board assemblies.

B. Metal stud wall framing.

C. Metal channel ceiling framing.

D. Cementitious backing board.

E. Gypsum wallboard

F. Joint treatment and accessories.

1.02 RELATED REQUIREMENTS

A. Section 061000 - Rough Carpentry: Wood blocking product and execution requirements.

1.03 REFERENCE STANDARDS

A. AISI S220 - North American Standard for Cold-Formed Steel Nonstructural Framing.

B. AISI S240 - North American Standard for Cold-Formed Steel Structural Framing.

C. ANSI A108.11 - American National Standard Specifications for Interior Installation of Cementitious Backer Units.

D. ANSI A118.9 - American National Standard Specifications for Test Methods and Specifications for Cementitious Backer Units.

E. ASTM A1003/A1003M - Standard Specification for Steel Sheet, Carbon, Metallic- and Nonmetallic-Coated for Cold-Formed Framing Members.

F. ASTM C665 - Standard Specification for Mineral-Fiber Blanket Thermal Insulation for Light Frame Construction and Manufactured Housing.

G. ASTM C754 - Standard Specification for Installation of Steel Framing Members to Receive Screw-Attached Gypsum Panel Products.

H. ASTM C840 - Standard Specification for Application and Finishing of Gypsum Board.

I. ASTM C1325 - Standard Specification for Fiber-Mat Reinforced Cementitious Backer Units.

J. ASTM C1396/C1396M - Standard Specification for Gypsum Board.

K. ASTM C1629/C1629M - Standard Classification for Abuse-Resistant Nondecorated Interior Gypsum Panel Products and Fiber-Reinforced Cement Panels.

L. ASTM C1658/C1658M - Standard Specification for Glass Mat Gypsum Panels.

M. ASTM D3273 - Standard Test Method for Resistance to Growth of Mold on the Surface of Interior Coatings in an Environmental Chamber.

N. GA-216 - Application and Finishing of Gypsum Panel Products.

1.04 SUBMITTALS

A. See Section 013000 - Administrative Requirements for submittal procedures.

B. Product Data:
   1. Provide data on metal framing, gypsum board, accessories, and joint finishing system.

C. Test Reports: For plaster, gypsum board panels and drywall compound, provide independent laboratory reports and test results showing negative asbestos containing materials content using Polarized Light Microscopy (PLM) test method.

1.05 QUALITY ASSURANCE

A. Installer Qualifications: Company specializing in performing gypsum board installation and finishing, with minimum five years of experience.

PART 2 PRODUCTS

2.01 GYPSUM BOARD ASSEMBLIES

A. Provide completed assemblies complying with ASTM C840 and GA-216.
   1. See PART 3 for finishing requirements.

B. Fire Rated Assemblies: Provide completed assemblies complying with applicable code.

2.02 METAL FRAMING MATERIALS

A. Steel Sheet: ASTM A1003/A1003M, subject to the ductility limitations indicated in AISI S240.

B. Manufacturers - Metal Framing, Connectors, and Accessories:
   1. Clarkwestern Dietrich Building Systems LLC: www.clarkdietrich.com.
   2. Custom Stud Inc: www.customstud.com
   3. Marino: www.marinoware.com/#sle.
   4. Telling Industries, www.buildstrong.com.
   5. Substitutions: See Section 016000 - Product Requirements.

C. Nonstructural Framing System Components: AISI S220; galvanized sheet steel, of size and properties necessary to comply with ASTM C754 for the spacing indicated, with maximum deflection of wall framing of L/120 at 5 psf.
   1. Studs: C-shaped with knurled or embossed faces.
   2. Runners: U shaped, sized to match studs.
   3. Ceiling Channels: C-shaped.

D. Partition Head To Structure Connections: Provide track fastened to structure with legs of sufficient length to accommodate deflection, for friction fit of studs cut short and fastened as indicated on drawings.

E. Nail Guard:
   1. Provide nail guard as required by local authority having jurisdiction.
   2. Provide nail guard on face of studs where piping and conduit are routed through the partition within 1-1/4" of the face of the studs.

2.03 BOARD MATERIALS

A. Manufacturers - Gypsum-Based Board:
   1. American Gypsum Company: www.americangypsum.com/#sle.
   2. CertainTeed Corporation: www.certainteed.com/#sle.
   3. Georgia-Pacific Gypsum: www.gpgypsum.com/#sle.
   4. National Gypsum Company: www.nationalgypsum.com/#sle.
   5. PABCO Gypsum: www.pabcogypsum.com/#sle.
   6. USG Corporation: www.usg.com/#sle.
   7. Substitutions: See Section 016000 - Product Requirements.

B. Gypsum Wallboard: Paper-faced gypsum panels as defined in ASTM C1396/C1396M; sizes to minimize joints in place; ends square cut.
   1. Application: Use for vertical surfaces and ceilings, unless otherwise indicated.
   2. Glass mat faced gypsum panels, as defined in ASTM C1658/C1658M, suitable for paint finish, of the same core type and thickness may be substituted for paper-faced board.
   3. Mold Resistance: Score of 10, when tested in accordance with ASTM D3273.
      a. Mold-resistant board is required whenever board is being installed before the building is enclosed and conditioned.
      b. Mold resistant board is required where board is being installed in areas with potential exposure to moisture.
   4. Thickness:

a. Vertical Surfaces: 5/8 inch.

5. Paper-Faced Products:
   a. American Gypsum Company; LightRoc Gypsum Wallboard: www.americangypsum.com/#sle.
   b. Georgia-Pacific Gypsum; ToughRock: www.gpgypsum.com/#sle.
   c. Substitutions: See Section 016000 - Product Requirements.
6. Mold-Resistant, Paper-Faced Products:
   a. American Gypsum Company; M-Bloc: www.americangypsum.com/#sle.
   b. American Gypsum Company; M-Bloc Type X: www.americangypsum.com/#sle.
   c. American Gypsum Company; M-Bloc Type C: www.americangypsum.com/#sle.
   d. Georgia-Pacific Gypsum; ToughRock Mold-Guard: www.gpgypsum.com/#sle.
   e. Georgia-Pacific Gypsum; ToughRock Fireguard X Mold-Guard: www.gpgypsum.com/#sle.
   f. National Gypsum Company; Gold Bond XP Gypsum Board: www.nationalgypsum.com/#sle.
   g. Substitutions: See Section 016000 - Product Requirements.
7. Glass Mat Faced Products Regular and Type X:
   a. Georgia-Pacific Gypsum; DensArmor Plus: www.gpgypsum.com/#sle.
   b. Georgia-Pacific Gypsum; DensArmor Plus Fireguard C: www.gpgypsum.com/#sle.
   c. National Gypsum Company; Gold Bond eXP Fire-Shield Interior Extreme Gypsum Panel: www.nationalgypsum.com/#sle.
   d. USG Corporation; USG Sheetrock Brand Glass-Mat Panels Mold Tough.
   e. Substitutions: See Section 016000 - Product Requirements.

C. Impact Resistant Wallboard:
1. Application: High-traffic areas indicated.
2. Surface Abrasion: Level 3, minimum, when tested in accordance with ASTM C1629/C1629M.
3. Indentation: Level 1, minimum, when tested in accordance with ASTM C1629/C1629M.
4. Soft Body Impact: Level 2, minimum, when tested in accordance with ASTM C1629/C1629M.
5. Hard Body Impact: Level 2, minimum, when tested in accordance with ASTM C1629/C1629M.
6. Mold Resistance: Score of 10, when tested in accordance with ASTM D3273.
7. Type: Fire-resistance-rated Type X, UL or WH listed.
8. Thickness: 5/8 inch.
9. Edges: Tapered.

D. Backing Board For Wet Areas: One of the following products:
1. Application: Surfaces behind tile in wet areas including tub and shower surrounds and shower ceilings.
2. Mold Resistance: Score of 10, when tested in accordance with ASTM D3273.
3. ANSI Cement-Based Board: Non-gypsum-based; aggregated Portland cement panels with glass fiber mesh embedded in front and back surfaces complying with ANSI A118.9 or ASTM C1325.
   a. Thickness: 1/2 inch.
   b. Products:
      1) Custom Building Products; WonderBoard: www.custombuildingproducts.com.
      2) National Gypsum Company; PermaBase Cement Board: www.nationalgypsum.com/#sle.
      3) USG Corporation; Durock Cement Board: www.usg.com.
      4) James Hardie Building Products, Inc; HardieBacker Fiber Cement Backer Board; www.jameshardie.com.
      5) Substitutions: See Section 016000 - Product Requirements.

2.04 GYPSUM BOARD ACCESSORIES

A. Acoustic Insulation: ASTM C665; preformed mineral-fiber, friction fit type, unfaced; thickness as required for STC.

B. High Build Drywall Surfacer: Vinyl acrylic latex-based coating for spray application, designed to take the place of skim coating and separate paint primer in achieving Level 5 finish.

PART 3 EXECUTION

3.01 EXAMINATION

A. Verify that project conditions are appropriate for work of this section to commence.

3.02 FRAMING INSTALLATION

A. Metal Framing: Install in accordance with AISI S220 and manufacturer's instructions.

B. Suspended Ceilings and Soffits: Space framing and furring members as indicated.
   1. Level ceiling system to a tolerance of 1/1200.
   2. Laterally brace entire suspension system.
   3. Install bracing as required at exterior locations to resist wind uplift.

C. Studs: Space studs at 16 inches on center.
   1. Extend partition framing to structure where indicated and to ceiling in other locations.
   2. Partitions Terminating at Ceiling: Attach ceiling runner securely to ceiling track in accordance with manufacturer's instructions.
   3. Partitions Terminating at Structure: Attach extended leg top runner to structure, maintain clearance between top of studs and structure, and brace both flanges of studs with continuous bridging.

D. Openings: Reinforce openings as required for weight of doors or operable panels, using not less than double studs at jambs.

E. Standard Wall Furring: Install at concrete walls scheduled to receive gypsum board, not more than 4 inches from floor and ceiling lines and abutting walls. Secure in place on alternate channel flanges at maximum 24 inches on center.
   1. Orientation: Horizontal.
   2. Spacing: At 16 inches on center.

F. Blocking: Install wood blocking for support of:
   1. Framed openings.
   2. Wall-mounted cabinets.
   3. Plumbing fixtures.
   4. Toilet partitions.
   5. Toilet accessories.
   6. Wall-mounted door hardware.

3.03 ACOUSTIC ACCESSORIES INSTALLATION

A. Acoustic Insulation: Place tightly within spaces, around cut openings, behind and around electrical and mechanical items within partitions, and tight to items passing through partitions.

B. Acoustic Sealant: Install in accordance with manufacturer's instructions.
   1. Place one bead continuously on substrate before installation of perimeter framing members.
   2. Place continuous bead at perimeter of each layer of gypsum board.
   3. Seal around all penetrations by conduit, pipe, ducts, and rough-in boxes, except where firestopping is provided.

3.04 BOARD INSTALLATION

A. Comply with ASTM C840, GA-216, and manufacturer's instructions. Install to minimize butt end joints, especially in highly visible locations.

B. Single-Layer Nonrated: Install gypsum board in most economical direction, with ends and edges occurring over firm bearing.

C. Double-Layer, Nonrated: Use gypsum board for first layer, placed parallel to framing or furring members, with ends and edges occurring over firm bearing. Use glass mat faced gypsum board at exterior walls and at other locations as indicated. Place second layer perpendicular to framing or furring members. Offset joints of second layer from joints of first layer.

D. Fire-Resistance-Rated Construction: Install gypsum board in strict compliance with requirements of assembly listing.

E. Cementitious Backing Board: Install over steel framing members and plywood substrate where indicated, in accordance with ANSI A108.11 and manufacturer's instructions.

F. Installation on Metal Framing: Use screws for attachment of gypsum board except face layer of nonrated double-layer assemblies, which may be installed by means of adhesive lamination.

3.05 INSTALLATION OF TRIM AND ACCESSORIES

A. Control Joints: Place control joints consistent with lines of building spaces and as indicated.
   1. Not more than 30 feet apart on walls and ceilings over 50 feet long.

B. Corner Beads: Install at external corners, using longest practical lengths.

C. Edge Trim: Install at locations where gypsum board abuts dissimilar materials.

3.06 JOINT TREATMENT

A. Paper Faced Gypsum Board: Use paper joint tape, bedded with ready-mixed vinyl-based joint compound and finished with ready-mixed vinyl-based joint compound.

B. Finish gypsum board in accordance with levels defined in ASTM C840, as follows:
   1. Level 5: Walls and ceilings to receive semi-gloss or gloss paint finish and other areas specifically indicated. Walls receiving marker board paint system including new and existing walls.
   2. Level 4: Walls and ceilings to receive paint finish or wall coverings, unless otherwise indicated.
   3. Level 3: Walls to receive textured wall finish.
   4. Level 2: In utility areas, behind cabinetry, and on backing board to receive tile finish.
   5. Level 1: Fire rated wall areas above finished ceilings, whether or not accessible in the completed construction.
   6. Level 0: Temporary partitions.

C. Tape, fill, and sand exposed joints, edges, and corners to produce smooth surface ready to receive finishes.
   1. Feather coats of joint compound so that camber is maximum 1/32 inch.

D. Where Level 5 finish is indicated, spray apply high build drywall surfacer over entire surface after joints have been properly treated; achieve a flat and tool mark-free finish.

E. Fill and finish joints and corners of cementitious backing board as recommended by manufacturer.

3.07 CORNER GUARDS

A. Install blocking and mechanical blocking anchoring, etc. required for recessed or surface mounted corner guards as detailed on the drawings above base.

3.08 TOLERANCES

A. Maximum Variation of Finished Gypsum Board Surface from True Flatness: 1/8 inch in 10 feet in any direction.

3.09 CLEANING

A. Clean _____.

3.10 PROTECTION

A. Protect installed gypsum board assemblies from subsequent construction operations.

END OF SECTION

SECTION 092119
ENCLOSURE OF ASBESTOS CONTAINING MATERIALS

PART 1 GENERAL

1.01 DESCRIPTION OF WORK

A. The work of this Section includes the enclosure of minor amounts of asbestos-containing materials.

1.02 SUBMITTALS

A. Product Data: Submit manufacturer's technical information including label analysis and application instructions for each material proposed for use.

B. Installation Instructions: Submit manufacturer's installation instructions with specific project requirements noted.

C. Safety Data Sheet: Submit the Safety Data Sheet, or equivalent, in accordance with the OSHA Hazard Communication Standard (29 CFR 1910.1200) for each surfactant and encapsulating material proposed for use on the work. Include a separate attachment for each sheet indicating the specific worker protective equipment proposed for use with the material indicated.

1.03 DELIVERY AND STORAGE

A. Deliver materials to the job site in original, new and unopened packages and containers bearing manufacturer's name and label, name of the material, and include application instructions.

B. Deliver materials together with a copy of the OSHA Safety Data Sheet for the material.

1.04 JOB CONDITIONS

A. Apply encapsulating materials only when environmental conditions in the work area are as required by the manufacturer's instructions.

PART 2 PRODUCTS

2.01 GENERAL: THE CONTRACTOR SHALL DETERMINE WHICH ENCLOSURE METHOD BEST SUITS THE WORK AREA, SUBSTRATE CONDITIONS, AND LOCATION OF INACCESSIBLE MATERIAL. SUBMIT A PRODUCT(S) TO ENCLOSURE THE MATERIAL AS DESCRIBED BELOW OR SUBMIT AN ALTERNATIVE PRODUCT FOR INSTALLATION.

2.02 GYPSUM BOARD PRODUCTS, SUPPORT MATERIALS, AND TRIM ACCESSORIES

A. Gypsum Wallboard: ASTM C 36, with regular backing, tapered edges, and ½" thick, in maximum lengths available to minimize end-to-end butt joints.

B. Metal Support Materials:
   1. General: Size ceiling support components to comply with ASTM C 754 unless otherwise indicated.
   2. Hanger Wire: ASTM A 641, soft, Class 1 galvanized.
   3. Hanger Rods and Flats: Mild steel with zinc or equally rust inhibitive coating for rods and zinc or rust-inhibitive paint finish for flats.
   4. Hanger Anchorage Devices: Screws, clips, bolts, or other devices applicable to the indicated method of structural anchorage for ceiling hangers and whose suitability for use intended has been proven through standard construction practices or by certified test data. Size devices for 3 x calculated load supported except size direct pull-out concrete inserts for 5 x calculated loads.
   5. Furring Members: ASTM C 645; 0.0179" min. thickness of base metal, hat-shaped.
   6. Studs: ASTM C 645; 0.0179" min. thickness of base metal unless otherwise indicated.
   7. Runners: Match studs; type recommended by stud manufacturer for floor and ceiling support of studs, and for vertical abutment of drywall work at other work.

C. General: Provide manufacturer's standard trim accessories of types indicated for drywall work, formed of galvanized steel unless otherwise indicated, with either knurled and perforated or

expanded flanges for nailing or stapling, and beaded for concealment of flanges in joint compound. Provide corner beads, L-type edge trim-beads, U-type edge trim-beads, special L-kerf-type edge trim-beads, and one-piece control joint beads.

1. Semi-Finishing Type: manufacturer's standard trim units which are not to be finished with joint compound (non-beaded).
2. Plastic Edge Trim: manufacturer's standard rigid or semi-rigid PVC moldings of the semi-finished type, shaped to provide resilient contact of gypsum board edges with other work; friction-fit, or pressure-sensitive adhesive mounting.

2.03 SRAY FOAM

A. Provide spray foam capable of specifically adhering to the asbestos-containing material, which satisfies fire ratings, and is compatible with the substrate to which it is being applied.

2.04 RUBBER MEMBRANE

A. Provide rubber membrane, at least 20 mil in thickness, to enclose the material. Indicate the materials with which the membrane will be attached and sealed to the substrate. The rubber membrane must be capable of expanding and contracting with the building structure to prevent ripping or tearing of the enclosure.

PART 3 EXECUTION

3.01 GENERAL

A. Do Not Commence Installation of the enclosure until all removal work within the work area has been completed and verified by the Owner that remaining material is inaccessible.

3.02 WORKER PROTECTION

A. Before beginning work with any material for which a Material Safety Data Sheet has been submitted provide workers with the required protective equipment, which may include combination HEPA/chemical cartridges. Require that appropriate protective equipment be used at all times.

3.03 GENERAL GYPSUM BOARD INSTALLATION REQUIREMENTS

A. Gypsum Board Application and Finishing Standards: ASTM C 840 and GA 216.

B. Locate exposed end-butt joints as far from center of walls and ceilings as possible, and stagger not less than 1'-0" in alternate courses of board.

C. Install ceiling boards in the direction and manner which will minimize the number of end-butt joints, and which will avoid end joints in the central area of each ceiling. Stagger end joints at least 1'-0".

D. Install wall/partition boards vertically or horizontally to avoid end-butt joints wherever possible. At stairwells and similar high walls, install boards horizontally with end joints staggered over studs.

E. Install exposed gypsum board with face side out. Do not install imperfect, damaged or damp boards. Butt boards together for a light contact at edges and ends with not more than 1/16" open space between boards. Do not force into place.

F. Locate either edge or end joints over supports, except in horizontal applications where intermediate supports or gypsum board back-blocking is provided behind end joints. Position boards so that like edges abut, tapered edges against tapered edges and mill-cut or field-cut ends against mill-cut or field- cut ends. Do not place tapered edges against cut edges or ends. Stagger vertical joints over different studs on opposite sides of partitions.

G. Attach gypsum board to supplementary framing and blocking. Provide for additional support at openings and cutouts.

H. Form control joints and expansion joints with space between edges of boards, prepared to receive trim accessories. Provide air tight seal.

I. Cover both faces of steel stud partition framing with gypsum board in concealed spaces (above ceilings, etc.), except in chase walls which are properly braced internally.
   1. Except where concealed application is required for sound, fire, air or smoke ratings, coverage may be accomplished with scraps of not less than 8 sq. ft. in area, and may be limited to not less than 75% of full coverage.

J. Provide air tight seal.

K. Comply with ASTM C 919 and manufacturer's recommendations for location of beads, and seal flanking paths around or through the work, including sealing of partitions above acoustical ceilings.

L. Space fasteners in gypsum boards in accordance with referenced standards and manufacturer's recommendations, except as otherwise indicated.

3.04 SEALING OF EXPOSED ASBESTOS-CONTAINING MATERIALS

A. Seal Asbestos-Containing Material exposed by removals up to an inaccessible spot with a spray foam.
   1. Prior to sealing, permit the exposed edges to dry completely to permit penetration of the foam sealer.

B. Seal edges of Asbestos-Containing Material exposed by removals up to an inaccessible spot with 20 mil thick rubber membrane.
   1. Install rubber membrane, overlapping edges by a minimum of two (2) inches.
   2. Attach the rubber membrane to the substrate through the use of metal clips or equivalent and seal the edge of the rubber membrane with a sealant.

END OF SECTION

This page intentionally left blank

SECTION 093000
TILING

PART 1 GENERAL

1.01 SECTION INCLUDES

A. Tile for floor applications.

B. Tile for wall applications.

C. Cementitious backer board as tile substrate.

D. Stone thresholds.

E. Non-ceramic trim.

1.02 RELATED REQUIREMENTS

A. Section 079200 - Joint Sealants: Sealing joints between tile work and adjacent construction and fixtures.

B. Section 092116 - Gypsum Board Assemblies: Tile backer board.

1.03 REFERENCE STANDARDS

A. ANSI A108.1a - American National Standard Specifications for Installation of Ceramic Tile in the Wet-Set Method, with Portland Cement Mortar.

B. ANSI A108.1b - Installation of Ceramic Tile on a Cured Portland Cement Mortar Setting Bed with Dry-Set, Modified Dry-Set, or Improved Modified Dry-Set Cement Mortar.

C. ANSI A108.1c - Contractor's Option: Installation of Ceramic Tile in the Wet-Set Method with Portland Cement Mortar or Installation of Ceramic Tile on a Cured Portland Cement Mortar Setting Bed with Dry-Set, Modified Dry-Set, or Improved Modified Dry-Set Cement Mortar.

D. ANSI A108.4 - American National Standard Specifications for Installation of Ceramic Tile with Organic Adhesive or Water Cleanable Tile-Setting Epoxy Adhesive.

E. ANSI A108.5 - Setting of Ceramic Tile with Dry-Set Cement Mortar, Modified Dry-Set Cement Mortar, EGP (Exterior Glue Plywood) Modified Dry-Set Cement Mortar, or Improved Modified Dry-Set Cement Mortar.

F. ANSI A108.6 - American National Standard Specifications for Installation of Ceramic Tile with Chemical Resistant, Water Cleanable Tile-Setting and -Grout Epoxy.

G. ANSI A108.8 - American National Standard Specifications for Installation of Ceramic Tile with Chemical Resistant Furan Resin Mortar and Grout.

H. ANSI A108.9 - American National Standard Specifications for Installation of Ceramic Tile with Modified Epoxy Emulsion Mortar/Grout.

I. ANSI A108.10 - American National Standard Specifications for Installation of Grout in Tilework.

J. ANSI A108.12 - Installation of Ceramic Tile with EGP (Exterior Glue Plywood) Modified Dry-Set Mortar.

K. ANSI A108.13 - American National Standard for Installation of Load Bearing, Bonded, Waterproof Membranes for Thin-Set Ceramic Tile and Dimension Stone.

L. ANSI A118.3 - American National Standard Specifications for Chemical Resistant, Water Cleanable Tile-Setting and -Grouting Epoxy and Water Cleanable Tile-Setting Epoxy Adhesive.

M. ANSI A118.12 - American National Standard Specifications for Crack Isolation Membranes for Thin-Set Ceramic Tile and Dimension Stone Installation.

N. ANSI A137.1 - American National Standard Specifications for Ceramic Tile.

O. ASTM C373 - Standard Test Methods for Determination of Water Absorption and Associated Properties by Vacuum Method for Pressed Ceramic Tiles and Glass Tiles and Boil Method for Extruded Ceramic Tiles and Non-tile Fired Ceramic Whiteware Products.

1.04 SUBMITTALS

A. See Section 013000 - Administrative Requirements for submittal procedures.

B. Product Data: Provide manufacturers' data sheets on tile, mortar, grout, and accessories. Include instructions for using grouts and adhesives.

C. Shop Drawings: Indicate tile layout, patterns, color arrangement, perimeter conditions, junctions with dissimilar materials, control and expansion joints, thresholds, ceramic accessories, and setting details.

D. Samples: Mount tile and apply grout on two plywood panels, minimum 18 by 18 inches in size illustrating pattern, color variations, and grout joint size variations.

E. Manufacturer's Certificate: Certify that products meet or exceed specified requirements.

1.05 QUALITY ASSURANCE

A. Manufacturer Qualifications: Company specializing in manufacturing the types of products specified in this section, with minimum five years of documented experience.

B. Installer Qualifications:

1.06 DELIVERY, STORAGE, AND HANDLING

A. Protect adhesives from freezing or overheating in accordance with manufacturer's instructions.

1.07 FIELD CONDITIONS

A. Do not install solvent-based products in an unventilated environment.

B. Maintain ambient and substrate temperature above 50 degrees F and below 100 degrees F during installation and curing of setting materials.

PART 2 PRODUCTS

2.01 TILE

A. Manufacturers: All products by the same manufacturer.
   1. American Olean Corporation: www.americanolean.com/#sle.
   2. Dal-Tile Corporation: www.daltile.com/#sle.
   3. Emser Tile, LLC: www.emser.com/#sle.
   4. Terrazzo & Marble Supply Companies: www.tmsupply.com/#sle.
   5. Florida Tile; www.floridatile.com.
   6. Substitutions: See Section 016000 - Product Requirements.

B. Porcelain Tile: ANSI A137.1, standard grade.
   1. Moisture Absorption: 0 to 0.5 percent as tested in accordance with ASTM C373.
   2. Size: as indicated on the drawings inch, nominal.
   3. Thickness: 3/8 inch.
   4. Surface Finish: Non-slip.
   5. Color(s): To be selected by Architect from manufacturer's custom range.
   6. Pattern: as indicated on the drawings.

2.02 SETTING MATERIALS

A. Manufacturers:
   1. ARDEX Engineered Cements: www.ardexamericas.com.
   2. Bostik Inc: www.bostik-us.com.
   3. Custom Building Products: www.custombuildingproducts.com.
   4. LATICRETE International, Inc: www.laticrete.com.
   5. Merkrete, by Parex USA, Inc: www.merkrete.com/sle.
   6. Substitutions: See Section 016000 - Product Requirements.

2.03 GROUTS

A. Manufacturers:

1. ARDEX Engineered Cements: www.ardexamericas.com.
2. Bostik Inc: www.bostik-us.com.
3. Custom Building Products: www.custombuildingproducts.com.
4. LATICRETE International, Inc: www.laticrete.com.
5. Merkrete, by Parex USA, Inc: www.merkrete.com/sle.
6. Substitutions: See Section 016000 - Product Requirements.

B. Epoxy Grout: ANSI A118.3 chemical resistant and water-cleanable epoxy grout.
1. Applications: Where indicated.
2. Color(s): As selected by Architect from manufacturer's full line.
3. Products:
a. ARDEX Engineered Cements; ARDEX WA: www.ardexamericas.com/#sle.
b. Custom Building Products; CEG-IG 100% Solids Industrial Grade Epoxy Grout: www.custombuildingproducts.com/#sle.
c. LATICRETE International, Inc; LATICRETE SPECTRALOCK PRO Premium Grout: www.laticrete.com/#sle.
d. Merkrete, by Parex USA, Inc; Merkrete Pro Epoxy: www.merkrete.com/#sle.
e. Stuart Dean Company, Inc; Marcoat GS: www.stuartdean.com/#sle.
f. Substitutions: See Section 016000 - Product Requirements.

2.04 MAINTENANCE MATERIALS

A. Grout Sealer: Liquid-applied, moisture and stain protection for existing or new Portland cement grout.
1. Composition: Water-based pigmented urethane acrylic.
2. Color(s): As selected by Architect from manufacturer's full line.
3. Products:
a. Merkrete, by Parex USA, Inc; Merkrete Revive: www.merkrete.com/#sle.
b. Substitutions: See Section 016000 - Product Requirements.

B. Tile Sealer: Stain protection for porcelain tile tile.
1. Products:
a. Custom Building Products; Aqua Mix Enrich 'N' Seal: www.custombuildingproducts.com/#sle.
b. STONETECH, a division of LATICRETE international, Inc; STONETECH Heavy Duty Stone Sealer: www.laticrete.com/#sle.
c. Substitutions: See Section 016000 - Product Requirements.

2.05 ACCESSORY MATERIALS

A. Concrete Floor Slab Crack Isolation Membrane: Material complying with ANSI A118.12; not intended as waterproofing.
1. Type: Fluid-applied.
2. Crack Resistance: No failure at 1/8 inch gap, minimum.
3. Products:
a. Substitutions: See Section 016000 - Product Requirements.

PART 3 EXECUTION

3.01 EXAMINATION

A. Verify that subfloor surfaces are smooth and flat within the tolerances specified for that type of work and are ready to receive tile.

B. Verify that wall surfaces are smooth and flat within the tolerances specified for that type of work, are dust-free, and are ready to receive tile.

C. Verify that subfloor surfaces are dust free and free of substances that could impair bonding of setting materials to subfloor surfaces.

D. Verify that concrete sub-floor surfaces are ready for tile installation by testing for moisture emission rate and alkalinity; obtain instructions if test results are not within limits recommended by tile manufacturer and setting materials manufacturer.

E. Verify that required floor-mounted utilities are in correct location.

3.02 PREPARATION

A. Protect surrounding work from damage.

B. Vacuum clean surfaces and damp clean.

C. Seal substrate surface cracks with filler. Level existing substrate surfaces to acceptable flatness tolerances.

D. Prepare substrate surfaces for adhesive installation in accordance with adhesive manufacturer's instructions.

3.03 INSTALLATION - GENERAL

A. Lay tile to pattern indicated. Do not interrupt tile pattern through openings.

B. Cut and fit tile to penetrations through tile, leaving sealant joint space. Form corners and bases neatly. Align floor joints.

C. Place tile joints uniform in width, subject to variance in tolerance allowed in tile size. Make grout joints without voids, cracks, excess mortar or excess grout, or too little grout.

D. Form internal angles square and external angles bullnosed.

E. Sound tile after setting. Replace hollow sounding units.

F. Keep control and expansion joints free of mortar, grout, and adhesive.

G. Prior to grouting, allow installation to completely cure; minimum of 48 hours.

H. Grout tile joints unless otherwise indicated. Use standard grout unless otherwise indicated.

I. At changes in plane and tile-to-tile control joints, use tile sealant instead of grout, with either bond breaker tape or backer rod as appropriate to prevent three-sided bonding.

3.04 CLEANING

A. Clean tile and grout surfaces.

3.05 PROTECTION

A. Do not permit traffic over finished floor surface for 4 days after installation.

END OF SECTION

SECTION 095100
ACOUSTICAL CEILINGS

PART 1 GENERAL

1.01 SECTION INCLUDES

A. Suspended metal grid ceiling system.

B. Acoustical units.

1.02 RELATED REQUIREMENTS

A. Section 016116 - Volatile Organic Compound (VOC) Content Restrictions.

1.03 REFERENCE STANDARDS

A. ASTM C635/C635M - Standard Specification for Manufacture, Performance, and Testing of Metal Suspension Systems for Acoustical Tile and Lay-in Panel Ceilings.

B. ASTM C636/C636M - Standard Practice for Installation of Metal Ceiling Suspension Systems for Acoustical Tile and Lay-In Panels.

C. ASTM E580/E580M - Standard Practice for Installation of Ceiling Suspension Systems for Acoustical Tile and Lay-in Panels in Areas Subject to Earthquake Ground Motions.

D. ASTM E1264 - Standard Classification for Acoustical Ceiling Products.

1.04 ADMINISTRATIVE REQUIREMENTS

A. Sequence work to ensure acoustical ceilings are not installed until building is enclosed, sufficient heat is provided, dust generating activities have terminated, and overhead work is completed, tested, and approved.

B. Do not install acoustical units until after interior wet work is dry.

1.05 SUBMITTALS

A. See Section 013000 - Administrative Requirements for submittal procedures.

B. Product Data: Provide data on suspension system components and acoustical units.

1.06 QUALITY ASSURANCE

A. Suspension System Manufacturer Qualifications: Company specializing in manufacturing the products specified in this section with minimum three years documented experience.

B. Acoustical Unit Manufacturer Qualifications: Company specializing in manufacturing the products specified in this section with minimum three years documented experience.

1.07 FIELD CONDITIONS

A. Maintain uniform temperature of minimum 60 degrees F, and maximum humidity of 40 percent prior to, during, and after acoustical unit installation.

PART 2 PRODUCTS

2.01 MANUFACTURERS

A. Acoustic Tiles/Panels: Match Existing
   1. Armstrong World Industries, Inc; Fine Fisssured: www.armstrong.com.
   2. Acoustic Ceiling Products, Inc; Genesis Standard Series Printed Pro: www.acpideas.com.
   3. CertainTeed Corporation; Fine Fissured High NRC Mineral Fiber Ceiling Panel: www.certainteed.com.

B. Substitutions: See Section 016000 - Product Requirements.

C. Suspension Systems:
   1. Same as for acoustical units.

2.02 ACOUSTICAL UNITS

A. Acoustical Units - General: ASTM E1264, Class A.

1. VOC Content: As specified in Section 016116.

B. Acoustical Panels, Type 24x48: Painted mineral fiber, with the following characteristics:
   1. Classification: ASTM E1264 Type III.
      a. Form: 2, water felted.
      b. Pattern: "B" - perforated, randomly spaced large holes.
   2. Panel Edge: Square.
   3. Color: White.
   4. Suspension System: Exposed grid.
   5. Products:
      a. Armstrong World Industries, Inc: Fine Fissured 1729 HumiGuard Plus; www.armstrongceilings.com/#sle.

2.03 SUSPENSION SYSTEM(S)

A. Metal Suspension Systems - General: Complying with ASTM C635/C635M; die cut and interlocking components, with perimeter moldings, hold down clips, stabilizer bars, clips, and splices as required.

2.04 ACCESSORIES

A. Support Channels and Hangers: Galvanized steel; size and type to suit application, seismic requirements, and ceiling system flatness requirement specified.

B. Hanger Wire: 12 gauge, 0.08 inch galvanized steel wire.

C. Perimeter Moldings: Same metal and finish as grid.
   1. At Exposed Grid: Provide L-shaped molding for mounting at same elevation as face of grid.
   2. At Concealed Grid: Provide exposed L-shaped molding.

D. Touch-up Paint: Type, color, and sheen to match acoustical and grid units.

PART 3 EXECUTION

3.01 EXAMINATION

A. Verify existing conditions before starting work.

B. Verify that layout of hangers will not interfere with other work.

3.02 INSTALLATION - SUSPENSION SYSTEM

A. Install suspension system in accordance with ASTM C636/C636M, ASTM E580/E580M, ASTM C636/C636M, ASTM E580/E580M, ASTM C636/C636M, and ASTM E580/E580M and as supplemented in this section.

B. Rigidly secure system, including integral mechanical and electrical components, for maximum deflection of 1:360.

C. Locate system on room axis according to reflected plan.

D. Perimeter Molding: Install at intersection of ceiling and vertical surfaces and at junctions with other interruptions.
   1. Use longest practical lengths.

E. Suspension System, Non-Seismic: Hang suspension system independent of walls, columns, ducts, pipes and conduit. Where carrying members are spliced, avoid visible displacement of face plane of adjacent members.

F. Where ducts or other equipment prevent the regular spacing of hangers, reinforce the nearest affected hangers and related carrying channels to span the extra distance.

G. Do not support components on main runners or cross runners if weight causes total dead load to exceed deflection capability.

H. Support fixture loads using supplementary hangers located within 6 inches of each corner, or support components independently.

I. Do not eccentrically load system or induce rotation of runners.

J. Perimeter Molding: Install at intersection of ceiling and vertical surfaces and at junctions with other interruptions.
   1. Use 1" seismic perimeter molding
   2. Do not use rivets where exposed to public.

K. Replace missing, broken bent or stained grid and tile within the work area.

3.03 INSTALLATION - ACOUSTICAL UNITS

A. Install acoustical units in accordance with manufacturer's instructions.

B. Fit acoustical units in place, free from damaged edges, stains or other defects detrimental to appearance and function.

C. Fit border trim neatly against abutting surfaces.

D. Install acoustical units level, in uniform plane, and free from twist, warp, and dents.

E. Cutting Acoustical Units:
   1. Cut to fit irregular grid and perimeter edge trim.
   2. Make field cut edges of same profile as factory edges.
   3. Double cut and field paint exposed reveal edges.

F. Where round obstructions occur, provide preformed closures to match perimeter molding.

G. Install hold-down clips on panels within 20 ft of an exterior door, and as directed by contract documents.

3.04 TOLERANCES

A. Maximum Variation from Flat and Level Surface: 1/8 inch in 10 feet.

B. Maximum Variation from Plumb of Grid Members Caused by Eccentric Loads: 2 degrees.

END OF SECTION

This page intentionally left blank

SECTION 096466
WOOD ATHLETIC FLOORING

PART 1 GENERAL

1.01 SECTION INCLUDES

A. Wood athletic flooring.

B. Subflooring.

C. Resilient cushioning.

D. Sheet vapor retarder.

E. Floor finishes.

F. Surface finishing and game markings.

1.02 RELATED REQUIREMENTS

A. Section 016116 - Volatile Organic Compound (VOC) Content Restrictions - Volatile Organic Compound (VOC) Content Restrictions.

B. Section 024100 - Demolition: Removal of existing wood athletic flooring and removal of existing telescoping bleachers and reinstallation.

C. Section 061000 - Rough Carpentry: Subfloor, miscellaneous concealed blocking and fasteners.

D. Section 090561 - Common Work Results for Flooring Preparation: Removal of existing floor coverings, cleaning, preparation, testing for slab moisture and remediation precedures.

E. Section 116623 - Gymnasium Equipment: Floor mounted sleeves and posts.

F. Section 126613 - Telescoping Bleachers: Coordination with existing bleachers and reinstallation.

1.03 REFERENCE STANDARDS

A. MFMA (PUR) - Performance and Uniformity Rating Sport Specific Standards.

B. MFMA (SPEC) - Guide Specifications for Maple Flooring Systems.

1.04 SUBMITTALS

A. See Section 013000 - Administrative Requirements, for submittal procedures.

B. Product Data: Provide data for flooring, subflooring, floor finish materials, resilient cushion, and game insert or socket devices.

C. Shop Drawings: Indicate floor joint pattern and termination details.
   1. Indicate provisions for expansion and contraction, wall base, and game insert or socket devices.
   2. Indicate size and type fasteners and anchors.
   3. Indicate location, size, design, and color of game markings.

1.05 QUALITY ASSURANCE

A. Perform work of this section in accordance with MFMA (SPEC).

B. Manufacturer Qualifications: Company specializing in manufacturing products specified in this section.
   1. Minimum five years of documented experience.

C. Installer Qualifications: Company specializing in installing products specified in this section.
   1. Minimum five years of documented experience.

1.06 MOCK-UP

A. Construct mock-up of wood athletic flooring including subflooring, resilient cushioning, and wood flooring. Illustrate final finish and include example of painted game lines.

B. See Section 014000 - Quality Requirements for additional requirements.

1.07 DELIVERY, STORAGE, AND HANDLING

A. Deliver materials and store off the floor in a well-ventilated, weather-tight space.

1.08 FIELD CONDITIONS

A. Do not install wood flooring until wet construction work is complete and permanent heat and air conditioning is installed and operating.

B. Maintain room temperature between 55 degrees F and 75 degrees F and relative humidity between 35 to 50 percent for a period of seven days prior to delivery of materials to installation space, during installation, and after installation.

C. Acclimate wood flooring materials to installation space a minimum of 48 hours prior to installation.

PART 2 PRODUCTS

2.01 MANUFACTURERS

A. Wood Athletic Flooring High School:
   1. Aacer Flooring; Powerplay Trax System : www.aacerflooring.com/#sle.
   2. Connor Sports Flooring; VIP System: www.connorfloor.com/#sle.
   3. Robbins Sports Surfaces; MVP System: www.robbinsfloor.com/#sle.
   4. Substitutions: Section 016000 - Product Requirements.

2.02 WOOD ATHLETIC FLOORING

A. General: Wood strip flooring, MFMA (PUR) compliant for application indicated; system components provided by single manufacturer.

B. Application: Gymnasium.

C. System Description:
   1. Floating, double layer subfloor, sheet cushion system, wood strip flooring..

2.03 COMPONENTS

A. Wood Strip Flooring:
   1. Species: Northern hard maple, kiln dried; tongue and groove edges, end matched.
   2. Grade: Second and better.
   3. Thickness: 25/32 or 33/32 inch.
   4. Width: 2-1/4 inches.
   5. Length: Random, minimum of 9 inches.

B. Subflooring: Two layers of 15/32 inch thick plywood, APA rated, exposure 1, minimum span rating of 32/16.

C. Subflooring: Manufacturer's standard pre-engineered subfloor suitable for system indicated.

D. Resilient Underlayment and resilient subfloor layer: Polyethylene foam sheet.
   1. Thickness: 5/8 inch minimum

E. Vapor Retarder: Polyethylene sheet, 6 mil thick; 2 inch wide tape for sealing sheet seams.

F. Fasteners and Anchors: Manufacturer's standard type and size to suit application.

2.04 FINISHES

A. Floor Finishes: Types recommended by flooring manufacturer and complying with MFMA specifications.
   1. Stain: Compatible with sealer, paint and finish coats; colors as indicated on the drawings.
   2. Sealer: Oil based urethane.
   3. Finish Coats: Oil based urethane; high gloss.
   4. Game Marking Paint: Compatible with sealer and finish coats; colors as indicated on drawings.

2.05 ACCESSORIES

A. Ventilating Base: Molded rubber, 4 inch high with a 3 inch toe, pre-molded outside corners; black color.

B. Edge Strip: Angle; mill finish aluminum.

C. Transition Strip: Same species and finish as flooring material; profiles indicated.

D. Game Socket Devices: Cast aluminum type, with anchors.

PART 3 EXECUTION

3.01 EXAMINATION

A. Verify existing conditions before starting this work.

B. Existing Concrete Floor Surfaces: Verify that substrates are ready for flooring installation by testing for moisture.
   1. Test in accordance with Section 090561.
   2. Follow moisture and humidity remediation procedures in Section 090561 - Common Work Results for Flooring Preparation.

C. Confirm existing concrete floor recess and provide cementicious fill as required for specific floor system being provided and in accordance with Section 035400 - Cast Underlayment.
   1. West Middle School: Floor recess approximately 3-3/4 inch.
   2. South High School: Floor recess approximately 4 inch.

D. Verify that concrete subfloor surface is smooth and flat to plus or minus 1/8 inch in 10 feet .

E. Verify that required floor-mounted utilities are in correct location.

3.02 PREPARATION

A. Prepare substrate to receive wood flooring in accordance with manufacturer's and MFMA instructions.

B. Vacuum clean substrate.

3.03 INSTALLATION

A. Place vapor retarder over concrete surface, overlap seams a minimum of 6 inches and seal with tape.

B. Subfloor:
   1. Middle School:
      a. Install lower layer of subfloor in accordance with manufacturer recommendations.
      b. The underside of the first layer shall have a continuous resilient pad.
      c. Install second layer of subfloor in accordance with manufacturer recommendations.
   2. High School:
      a. Lower Double Subfloor Composite: Install lower subfloor system in accordance with manufacturer recommendations.
      b. Upper Subfloor: Install upper subfloor in accordance with manufacturer recommendations.
   3. Allow 1/4 inch between plywood subfloor edges.

C. Install solid blocking at doorways, under stacked bleachers, under locations of heavy equipment, and as shown on drawings, in accordance with flooring manufacturer's recommendations.

D. Wood Flooring:
   1. Install in accordance with manufacturer's and MFMA instructions.
   2. Lay flooring parallel to length of main playing area. Blind nail or staple to subfloor.
   3. Install edge strips at unprotected or exposed edges, and where flooring terminates.
   4. Provide 2 inch expansion space at walls and other interruptions.

E. Install base at floor perimeter to cover expansion space in accordance with manufacturer's instructions. Miter inside corners.

F. Install floor sockets and inserts to a depth sufficient to ensure flush top surface with floor surface.

G. Finishing:
   1. Mask off adjacent surfaces before beginning sanding.
   2. Sand flooring to smooth even finish with no evidence of sander marks. Remove dust by vacuum.
   3. Apply two stain coats.
   4. Apply finishes in accordance with floor finish manufacturer's and MFMA instructions.
   5. Apply two sealer coats and two finish coats.
   6. Apply first coat, allow to dry, then buff lightly with recommended pad to remove irregularities. Vacuum clean and wipe with damp, lint-free cloth before applying second coat.
   7. Apply game lines/markers and logos in accordance with layout indicated on drawings.
   8. Apply two last coats of finish.

3.04 CLEANING

A. Clean floor surfaces in accordance with floor finish manufacturer's instructions.

3.05 PROTECTION

A. Prohibit traffic on finished floor for 72 hours after installation.

B. Place protective coverings over finished floors; do not remove coverings until Date of Substantial Completion.

END OF SECTION

SECTION 096500
RESILIENT FLOORING

PART 1 GENERAL

1.01 SECTION INCLUDES

A. Resilient base.

B. Installation accessories.

1.02 RELATED REQUIREMENTS

A. Section 016116 - Volatile Organic Compound (VOC) Content Restrictions.

B. Section 090561 - Common Work Results for Flooring Preparation: Removal of existing floor coverings, cleaning, and preparation.

1.03 REFERENCE STANDARDS

A. ASTM E648 - Standard Test Method for Critical Radiant Flux of Floor-Covering Systems Using a Radiant Heat Energy Source.

B. ASTM F1861 - Standard Specification for Resilient Wall Base.

C. NFPA 253 - Standard Method of Test for Critical Radiant Flux of Floor Covering Systems Using a Radiant Heat Energy Source.

D. RFCI (RWP) - Recommended Work Practices for Removal of Resilient Floor Coverings.

1.04 SUBMITTALS

A. See Section 013000 - Administrative Requirements for submittal procedures.

B. Product Data: Provide data on specified products, describing physical and performance characteristics; including sizes, patterns and colors available; and installation instructions.

C. Verification Samples: Submit two samples, ___ by ___ inch in size illustrating color and pattern for each resilient flooring product specified.

D. Maintenance Data: Include maintenance procedures, recommended maintenance materials, and suggested schedule for cleaning, stripping, and re-waxing.

E. Maintenance Materials: Furnish the following for Owner's use in maintenance of project.
   1. See Section 016000 - Product Requirements, for additional provisions.
   2. Extra Wall Base: 12 linear feet of each type and color.

1.05 QUALITY ASSURANCE

A. Manufacturer Qualifications: Company specializing in manufacturing specified flooring with minimum three years documented experience.

B. Installer Qualifications: Company specializing in installing specified flooring with minimum three years documented experience.

1.06 DELIVERY, STORAGE, AND HANDLING

A. Upon receipt, immediately remove any shrink-wrap and check materials for damage and the correct style, color, quantity and run numbers.

B. Store all materials off of the floor in an acclimatized, weather-tight space.

C. Maintain temperature in storage area between 55 degrees F and 90 degrees F.

D. Protect roll materials from damage by storing on end.

E. Do not double stack pallets.

1.07 FIELD CONDITIONS

A. Store materials for not less than 48 hours prior to installation in area of installation at a temperature of 70 degrees F to achieve temperature stability. Thereafter, maintain conditions above 55 degrees F.

PART 2 PRODUCTS

2.01 RESILIENT BASE

A. Resilient Base - Type ____: ASTM F1861, Type TP, rubber, thermoplastic; style as scheduled.
   1. Height: 6 inches.
   2. Thickness: 0.125 inch.
   3. Finish: Satin.
   4. Length: Roll.
   5. Color: As indicated on drawings.

PART 3 EXECUTION

3.01 EXAMINATION

A. Verify that surfaces are flat to tolerances acceptable to flooring manufacturer, free of cracks that might telegraph through flooring, clean, dry, and free of curing compounds, surface hardeners, and other chemicals that might interfere with bonding of flooring to substrate.

B. Verify that wall surfaces are smooth and flat within the tolerances specified for that type of work, are dust-free, and are ready to receive resilient base.

3.02 PREPARATION

A. Remove existing resilient flooring and flooring adhesives; follow the recommendations of RFCI (RWP).

B. Prepare floor substrates as recommended by flooring and adhesive manufacturers.

C. Prohibit traffic until filler is fully cured.

D. Clean substrate.

E. Apply primer as required to prevent "bleed-through" or interference with adhesion by substances that cannot be removed. Apply primer to _____ surfaces.

3.03 INSTALLATION - GENERAL

A. Starting installation constitutes acceptance of subfloor conditions.

B. Install in accordance with manufacturer's written instructions.

C. Adhesive-Applied Installation:
   1. Fit joints and butt seams tightly.
   2. Set flooring in place, press with heavy roller to attain full adhesion.

3.04 INSTALLATION - RESILIENT BASE

A. Fit joints tightly and make vertical. Maintain minimum dimension of 18 inches between joints.

B. Miter internal corners. At external corners, use premolded units. At exposed ends, use premolded units.

C. Install base on solid backing. Bond tightly to wall and floor surfaces.

D. Scribe and fit to door frames and other interruptions.

3.05 CLEANING

A. Remove excess adhesive from floor, base, and wall surfaces without damage.

B. Clean in accordance with manufacturer's written instructions.

3.06 PROTECTION

A. Prohibit traffic on resilient flooring for 48 hours after installation.

END OF SECTION

SECTION 096566
RESILIENT ATHLETIC FLOORING

PART 1 GENERAL

1.01 SECTION INCLUDES

A. Preformed Athletic Flooring; cushioned vinyl sheet flooring, adhesively installed.

B. Interlocking, loose-laid rubber tile.

C. Accessories.

1.02 RELATED REQUIREMENTS

A. Section 016116 - Volatile Organic Compound (VOC) Content Restrictions.

B. Section 090561 - Common Work Results for Flooring Preparation: Removal of existing floor coverings, cleaning, and preparation.

1.03 REFERENCE STANDARDS

A. ASTM D412 - Standard Test Methods for Vulcanized Rubber and Thermoplastic Elastomers--Tension.

B. ASTM D2240 - Standard Test Method for Rubber Property--Durometer Hardness.

1.04 SUBMITTALS

A. See Section 013000 - Administrative Requirements, for submittal procedures.

B. Product Data: Manufacturer's printed data sheets for products specified.

C. Test Reports: For flooring, leveling and patching compound and adhesives, provide independent laboratory reports and test results showing negative asbestos containing materials content using Polarized Light Microscopy (PLM) test method.

D. Selection Samples: Manufacturer's color charts for flooring materials specified and game line paints, indicating full range of colors and textures available. Game lines shall be limited to 1" (one inch) and 2" (two inches), and may be curved.

1.05 QUALITY ASSURANCE

A. Manufacturer Qualifications: Company specializing in manufacturing products specified in this section, with at least three years of documented experience.

B. Installer Qualifications: Company specializing in performing work of the type specified and with at least three years of documented experience.

1.06 DELIVERY, STORAGE, AND HANDLING

A. Deliver materials to project site in unopened containers clearly labeled with manufacturer's name and identification of contents.

B. Store materials in dry and clean location until needed for installation. During installation, handle in a manner that will prevent marring and soiling of finished surfaces.

1.07 FIELD CONDITIONS

A. Maintain temperature in spaces to receive adhesively installed resilient flooring within range of 70 to 95 degrees F for not less than 48 hours before the beginning of installation and for not less than 48 hours after installation has been completed. Subsequently, do not allow temperature in installed spaces to drop below 50 degrees F or to go above 100 degrees F.

PART 2 PRODUCTS

2.01 PREFORMED ATHLETIC FLOORING

A. Manufacturers: All products by the same manufacturer.
   1. Gerflor USA; Taraflex Sport M Plus Dry-Tex; www.gerflorusa.com.
   2. Substitutions: Not permitted.

B. Rubber Tile Flooring: Recycled SBR (styrene butadiene rubber) and colored EPDM granules with urethane binder.
   1. Thickness: Minimum 5/16 inch.
   2. Size: Nominal 18 inch square.
   3. Tensile Strength: Minimum 150 psi, per ASTM D412.
   4. Durometer Hardness, Type A: Minimum of 55, when tested in accordance with ASTM D2240.
   5. Surface Texture: Smooth.
   6. Colors: To be selected from manufacturer's full range of available colors.
      a. Selection to be made by Architect after award of contract.
      b. Allow for minimum of four colors to be selected, unless otherwise indicated, without additional cost to Owner.
      c. Colors to be homogenous in each room or space, unless otherwise indicated.
   7. Products:
      a. Johnsonite, a Tarkett Company; Product Replay Tile: www.johnsonite.com.
      b. Substitutions: See Section 016000 - Product Requirements.

2.02 ACCESSORIES

A. Leveling Compound: Latex-modified cement formulation as recommended by flooring manufacturer for substrate conditions.

B. Flooring Adhesive: Waterproof; types recommended by flooring manufacturer.

PART 3 EXECUTION

3.01 EXAMINATION

A. Examine substrates for conditions detrimental to installation of athletic flooring. Proceed with installation only after unsatisfactory conditions have been corrected.

B. Verify that surfaces are flat to tolerances acceptable to flooring manufacturer, free of cracks that might telegraph through flooring, clean, dry, and free of curing compounds, surface hardeners, and other chemicals that might interfere with bonding of athletic flooring to substrate.

C. Cementitious Subfloor Surfaces: Verify that substrates are ready for resilient flooring installation by testing for moisture and alkalinity (pH).
   1. Test in accordance with Section 090561.
   2. Obtain instructions if test results are not within limits recommended by resilient flooring manufacturer and adhesive materials manufacturer.

D. Report any unsatisfactory condition in writing.

3.02 PREPARATION

A. Prepare floor substrates for installation of flooring in accordance with Section 090561.

3.03 INSTALLATION

A. Starting installation constitutes acceptance of subfloor conditions.

B. Install in accordance with manufacturer's written instructions.

C. Rubber Tile Flooring:
   1. Lay out center lines in spaces to receive tile flooring, based on location of principal walls. Start tile installation from center, and adjust as necessary to avoid tiles less than one-half width at perimeter.
   2. Lay tiles square with room axis, matching for color and pattern by selecting from cartons and mixing as recommended by manufacturer.

3.04 CLEANING

A. Clean flooring using methods recommended by manufacturer.

3.05 PROTECTION

A. Protect finished athletic flooring from construction traffic to ensure that it is without damage upon Date of Substantial Completion.

END OF SECTION

This page intentionally left blank

SECTION 096700
FLUID-APPLIED FLOORING

PART 1 GENERAL LIQUID ELEMENTS

1.01 SECTION INCLUDES

A. Fluid-applied flooring and base.

1.02 RELATED REQUIREMENTS

A. Section 016116 - Volatile Organic Compound (VOC) Content Restrictions.

B. Section 079200 - Joint Sealants: Sealing joints between fluid-applied flooring and adjacent construction and fixtures.

C. Section 090561 - Common Work Results for Flooring Preparation: Concrete slab moisture and alkalinity testing and remediation procedures.

1.03 REFERENCE STANDARDS

A. ANSI/ESD STM7.1 - Standard Test Method for the Protection of Electrostatic Discharge Susceptible Items Flooring Systems Resistive Characterization.

B. ASTM D570 - Standard Test Method for Water Absorption of Plastics.

C. ASTM D638 - Standard Test Method for Tensile Properties of Plastics.

D. ASTM D695 - Standard Test Method for Compressive Properties of Rigid Plastics.

E. ASTM D905 - Standard Test Method for Strength Properties of Adhesive Bonds in Shear by Compression Loading.

F. ASTM D4060 - Standard Test Method for Abrasion Resistance of Organic Coatings by the Taber Abraser.

G. ASTM E96/E96M - Standard Test Methods for Gravimetric Determination of Water Vapor Transmission Rate of Materials.

H. ASTM E648 - Standard Test Method for Critical Radiant Flux of Floor-Covering Systems Using a Radiant Heat Energy Source.

I. ASTM F710 - Standard Practice for Preparing Concrete Floors to Receive Resilient Flooring.

J. ASTM F1869 - Standard Test Method for Measuring Moisture Vapor Emission Rate of Concrete Subfloor Using Anhydrous Calcium Chloride.

K. ASTM F2170 - Standard Test Method for Determining Relative Humidity in Concrete Floor Slabs Using in situ Probes.

L. ICRI 310.2R - Selecting and Specifying Concrete Surface Preparation for Sealers, Coatings, Polymer Overlays, and Concrete Repair.

1.04 SUBMITTALS

A. See Section 013000 - Administrative Requirements for submittal procedures.

B. Product Data: Provide data on specified products, describing physical and performance characteristics; sizes, patterns and colors available; and _____.

C. Samples: Submit two samples, 12" by 12" inch in size illustrating color and pattern for each floor material for each color specified.

D. Manufacturer's Installation Instructions: Indicate special procedures, perimeter conditions requiring special attention, and application rate for each coat.

E. Applicator's Qualification Statement.

F. Maintenance Materials: Furnish the following for Owner's use in maintenance of project.
   1. See Section 016000 - Product Requirements, for additional provisions.
   2. Extra Top Coat Materials: 2 gallons.

1.05 QUALITY ASSURANCE

A. Manufacturer Qualifications: Company specializing in manufacturing products specified in this section with minimum three years documented experience.

B. Applicator Qualifications: Company specializing in performing the work of this section.
   1. Minimum 3 years of documented experience.

1.06 DELIVERY, STORAGE, AND HANDLING

A. Store resin materials in a dry, secure area.

B. Store materials for three days prior to installation in area of installation to achieve temperature stability.

1.07 FIELD CONDITIONS

A. Maintain minimum temperature in storage area of 55 degrees F.

B. Store materials in area of installation for minimum period of 24 hours prior to installation.

C. Maintain ambient temperature required by manufacturer 72 hours prior to, during, and 24 hours after installation of materials.

PART 2 PRODUCTS

2.01 MANUFACTURERS

A. Fluid-Applied Flooring:
   1. Sherwin-Williams Company: www.flooring.sherwin-williams.com/#sle.
   2. Substitutions: See Section 016000 - Product Requirements.

2.02 FLUID-APPLIED FLOORING SYSTEMS

A. Fluid-Applied Flooring Type _____: Epoxy base coats, with broadcast aggregate.
   1. Products:
      a. Sherwin-Williams High-Performance Flooring; Resuflor Deco Quartz DB23: www.sherwin-williams.com/resin-flooring/#sle.

2.03 ACCESSORIES

A. Cant Strips: Molded of flooring resin material.

B. Primer: Type recommended by fluid-applied flooring manufacturer.

PART 3 EXECUTION

3.01 EXAMINATION

A. Verify that subfloor surfaces are smooth and flat within the tolerances specified for that type of work and are ready to receive flooring.

B. Cementitious Subfloor Surfaces: Verify that substrates are ready for fluid-applied flooring installation by testing for moisture and alkalinity (pH).
   1. Obtain instructions if test results are not within limits recommended by fluid-applied flooring manufacturer.

3.02 PREPARATION

A. Remove subfloor ridges and bumps. Fill low spots, cracks, joints, holes, and other defects with subfloor filler.

B. Prepare concrete surfaces according to ICRI 310.2R, _____.

C. Apply, trowel, and float filler to achieve smooth, flat, hard surface. Grind irregularities above the surface level. Prohibit traffic until filler is cured.

D. Vacuum clean substrate.

E. Apply primer to surfaces required by flooring manufacturer.

3.03 INSTALLATION - ACCESSORIES

A. Install cant strips at base of walls where flooring is to be extended up wall as base.

3.04 INSTALLATION - FLOORING

A. Apply in accordance with manufacturer's instructions.

B. Apply each coat to minimum thickness required by manufacturer.

C. Finish to smooth level surface.

D. Cove at vertical surfaces.

3.05 FIELD QUALITY CONTROL

A. See Section 014000 - Quality Requirements, for additional requirements.

B. Test installed floor surface in accordance with ANSI/ESD STM7.1 .

3.06 PROTECTION

A. Prohibit traffic on floor finish for 48 hours after installation.

B. Barricade area to protect flooring until fully cured.

END OF SECTION

This page intentionally left blank

SECTION 096813
TILE CARPETING

PART 1 GENERAL

1.01 SECTION INCLUDES

A. Carpet tile, fully adhered.

1.02 RELATED REQUIREMENTS

A. Section 016116 - Volatile Organic Compound (VOC) Content Restrictions.

B. Section 033000 - Cast-in-Place Concrete: Restrictions on curing compounds for concrete slabs and floors to receive adhesive-applied flooring.

C. Section 090561 - Common Work Results for Flooring Preparation: Removal of existing floor coverings, cleaning, and preparation.

D. Section 090561 - Common Work Results for Flooring Preparation: Concrete slab moisture and alkalinity independent testing and remediation procedures.

1.03 REFERENCE STANDARDS

A. ASTM D2859 - Standard Test Method for Ignition Characteristics of Finished Textile Floor Covering Materials.

B. ASTM E648 - Standard Test Method for Critical Radiant Flux of Floor-Covering Systems Using a Radiant Heat Energy Source.

C. ASTM E662 - Standard Test Method for Specific Optical Density of Smoke Generated by Solid Materials

D. NFPA 253 - Standard Method of Test for Critical Radiant Flux of Floor Covering Systems Using a Radiant Heat Energy Source.

1.04 SUBMITTALS

A. See Section 013000 - Administrative Requirements, for submittal procedures.

B. Shop Drawings: Indicate layout of joints, direction of carpet pile, and location of edge moldings.

C. Test Reports: For flooring, leveling and patching compound and adhesives, provide independent laboratory reports and test results showing negative asbestos containing materials content using Polarized Light Microscopy (PLM) test method.

1.05 QUALITY ASSURANCE

A. Installer Qualifications: Company specializing in installing carpet tile with minimum five years documented experience and approved by carpet tile manufacturer.

1.06 FIELD CONDITIONS

A. Store materials in area of installation for minimum period of 24 hours prior to installation.

PART 2 PRODUCTS

2.01 MATERIALS

A. Tile Carpeting, Type Modular: Patterned loop, manufactured in one color dye lot.
   1. Product: Gravity series manufactured by Tandus, A Tarkett Company: www.commercial.tarkett.com.
   2. Tile Size: 18 by 18 inch, nominal.
   3. Thickness:.187 inch pile height.
   4. Color: As indicated on the drawings.
   5. Pattern: As indicated on the drawings.
   6. Critical Radiant Flux: Minimum of 0.45 watts/sq cm, when tested in accordance with ASTM E648 or NFPA 253.
   7. Smoke Evolution: Maximum specific optical density of 450 or less, when tested in accordance with ASTM E 662.

8. Surface Flammability Ignition: Pass ASTM D2859 (the "pill test").
9. VOC Content: Comply with Section 016116.
10. Primary Backing Material: Powerbond.
11. Minimum Total Face Weight: 14 oz/sq yd.
12. Min. TARR: 3.5 when tested in accordance with ASTM D5252.
13. Dimensional Stability: Passing Aachen Test.

B. Carpet Tile Type Modular Walk Off: Patterned loop with scraper fibers, manufactured in one color dye lot. Provided by the owner.
1. Product: Abrasive Action II manufactured by Tandus, A Tarkett Company: www.commercial.tarkett.com.
2. Tile Size: 24 x 24 inch, nominal.
3. Thickness:.187 inch minimum pile height.
4. Color: As indicated on the drawings.
5. Critical Radiant Flux: Minimum of 0.45 watts/sq cm, when tested in accordance with ASTM E648 or NFPA 253.
6. Smoke Evolution: Maximum specific optical density of 450 or less, when tested in accordance with ASTM E 662.
7. Surface Flammability Ignition: Pass ASTM D2859 (the "pill test").
8. VOC Content: Comply with Section 01 6116.
9. Static Control Fiber: Invista Antron® Legacy type 6,6 or Invista Antron® Lumena with DuraTech® soil resistance treatment.
10. Max. Electrostatic Charge: 3 Kv. at 20 percent relative humidity.
11. Minimum Total Face Weight: 24 oz/sq yd.
12. Min. TARR: 3.5 when tested in accordance with ASTM D5252.
13. Dimensional Stability: Passing Aachen Test.

2.02 ACCESSORIES

A. Sub-Floor Filler: Type recommended by flooring material manufacturer, no latex material allowed.

B. Edge Strips: Embossed aluminum, color as selected by Architect.

C. Stair Nosing: As specified in Section 096500.

D. Adhesives:
1. Compatible with materials being adhered; maximum VOC content as specified in Section 016116.

E. Carpet Tile Adhesive: Recommended by carpet tile manufacturer.

PART 3 EXECUTION

3.01 EXAMINATION

A. Verify that subfloor surfaces are smooth and flat within tolerances specified for that type of work and are ready to receive carpet tile.

B. Verify that wall surfaces are smooth and flat within the tolerances specified for that type of work, are dust-free, and are ready to receive carpet tile.

C. Verify that subfloor surfaces are dust-free and free of substances that could impair bonding of adhesive materials to subfloor surfaces.

D. Cementitious Subfloor Surfaces: Verify that substrates are ready for flooring installation by testing for moisture and alkalinity (pH).
1. Test in accordance with Section 090561.
2. Obtain instructions if test results are not within limits recommended by flooring material manufacturer and adhesive materials manufacturer.

E. Verify that required floor-mounted utilities are in correct location.

3.02 PREPARATION

A. Prepare floor substrates for installation of flooring in accordance with Section 090561.

3.03 INSTALLATION

A. Starting installation constitutes acceptance of subfloor conditions.

B. Install carpet tile in accordance with manufacturer's instructions.

C. Blend carpet from different cartons to ensure minimal variation in color match.

D. Cut carpet tile clean. Fit carpet tight to intersection with vertical surfaces without gaps.

E. Lay carpet tile in square pattern, with pile direction alternating to next unit, set aligned as indicated on shop drawings.

F. Locate change of color or pattern between rooms under door centerline.

G. Trim carpet tile neatly at walls and around interruptions.

H. Complete installation of edge strips, concealing exposed edges.

3.04 CLEANING

A. Remove excess adhesive without damage, from floor, base, and wall surfaces.

B. Clean and vacuum carpet surfaces.

END OF SECTION

This page intentionally left blank

SECTION 098430
SOUND-ABSORBING WALL AND CEILING UNITS

PART 1 GENERAL

1.01 SECTION INCLUDES

A. Sound-absorbing panels; independent of visual display boards.

B. Sound-absorbing ceiling baffles.

1.02 REFERENCE STANDARDS

A. ASTM C423 - Standard Test Method for Sound Absorption and Sound Absorption Coefficients by the Reverberation Room Method.

B. ASTM E84 - Standard Test Method for Surface Burning Characteristics of Building Materials.

C. ASTM E795 - Standard Practices for Mounting Test Specimens during Sound Absorption Tests.

1.03 SUBMITTALS

A. See Section 013000 - Administrative Requirements for submittal procedures.

B. Product Data: Manufacturer's printed data sheets for products specified.

C. Shop Drawings: Fabrication and installation details, panel layout and fabric orientation.

D. Selection Samples: Manufacturer's color charts for fabric covering, indicating full range of fabrics, colors, and patterns available.

E. Verification Samples: Fabricated samples of each type of panel specified; 12 by 12 inch, showing construction, edge details, and fabric covering.

1.04 QUALITY ASSURANCE

A. Manufacturer Qualifications: Company specializing in manufacturing products of the type specified in this section, with at least three years of documented experience.

1.05 DELIVERY, STORAGE, AND HANDLING

A. Protect acoustical units from moisture during shipment, storage, and handling. Deliver in factory-wrapped bundles; do not open bundles until units are needed for installation.

B. Store units flat, in dry, well-ventilated space; do not stand on end.

C. Protect edges from damage.

PART 2 PRODUCTS

2.01 FABRIC-COVERED SOUND-ABSORBING UNITS

A. General:
   1. Prefinished, factory assembled fabric-covered panels.
   2. Surface Burning Characteristics: Flame spread index of 25 or less and smoke developed index of 450 or less, when tested in accordance with ASTM E84.

B. Fabric-Covered Acoustical Panels for Walls and Ceilings:
   1. Panel Core: Manufacturer's standard rigid or semi-rigid fiberglass core.
   2. Core Density: 6 to 10 lb/cu ft.
   3. Sound Absorption: Noise Reduction Coefficient (NRC) or Sound Absorption Average (SAA) of 1.10 when tested in accordance with ASTM C423.
   4. Panel Thickness: 2 inches.
   5. Corners: Square.
   6. Color: As selected by Architect from manufacturer's full range.
   7. Mounting Method: Back-mounted with mechanical fasteners.
   8. Products:
      a. G&S Acoustics: Acapella Scores, Acousti Panel: www.gsacoustics.com
      b. Kinetics Noise Control: www.kineticsnoise.com

c. Substitutions: See Section 016000 - Product Requirements

C. Wrapped Fiberglass Tackable Panels for Walls:
1. Panel Core: Manufacturer's standard rigid or semi-rigid fiberglass core.
a. Facing: 1/16 inch impact-resistant and tackable surface laminated to core.
2. Core Density: 6 to 10 lb/cu ft.
3. Sound Absorption: Noise Reduction Coefficient (NRC) or Sound Absorption Average (SAA) of 1.00 when tested in accordance with ASTM C423.
4. Panel Size: Standard and custom as indicated.
5. Panel Thickness: 2 inches.
6. Corners: Square.
7. Fabric: Fabric.
8. Color: As selected by Architect from manufacturer's full range.
9. Mounting Method: Back-mounted with mechanical fasteners.
10. Products:
a. Claridge: Tackwall TW1F
b. G&S Acoustics: Acousti-Tak (ATF); Geodesign: www.gsacoustics.com
c. Kinetics Noise Control: www.kineticsnoise.com
d. Substitutions: See Section 016000 - Product Requirements

D. Fabric-Covered Acoustical Ceiling Baffles:
1. Baffle Core: Manufacturer's standard core.
2. Sound Absorption: Noise Reduction Coefficient (NRC) or Sound Absorption Average (SAA) of 0.85 when tested in accordance with ASTM C423.
3. Baffle Size: 12 inches by 60 inches.
4. Baffle Thickness: As required to meet required acoustical performance.
5. Color: As selected by Architect from manufacturer's full range.
6. Mounting: Vertically suspended from ceiling or structure by one edge of panel.
7. Products:
a. Armstrong Ceilings; Feltworks: www.armstrongceilings.com
b. CSI Wall Panels; Soundcore Slab adn SCALA Finale 360 Ceiling System; www.csiwallpanels.com
c. G&S Acoustics - Pinta; Sonex Clean Baffle, Willtec Painted: www.gsacoustics.com
d. Substitutions: See 016000 - Product Requirements

2.02 FABRICATION

A. Fabric Wrapped, General: Fabricate panels to sizes and configurations as indicated, with fabric facing installed without sagging, wrinkles, blisters, or visible seams.
1. Where radiused or mitered corners are indicated, install fabric to avoid seams or gathering of material.
2. For panels suspended from ceiling, provide fabric covering both sides, with seams only at panel edges.

B. Tolerances: Fabricate to finished tolerance of plus or minus 1/16 inch for thickness, overall length and width, and squareness from corner to corner.

2.03 ACCESSORIES

A. Back-Mounting Accessories: Manufacturer's standard accessories for concealed support, designed to allow panel removal:

B. Ceiling-Suspended Accessories: Manufacturer's standard accessories at locations as indicated on each acoustical unit, sized appropriately for weight of acoustical unit.
1. Provide galvanized wire for suspension from ceiling at heights as indicated.

PART 3 EXECUTION

3.01 EXAMINATION

A. Examine substrates for conditions detrimental to installation of acoustical units. Proceed with installation only after unsatisfactory conditions have been corrected.

3.02 INSTALLATION

A. Install acoustical units in locations as indicated, following manufacturer's installation instructions.

B. Install mounting accessories and supports in accordance with shop drawings.

C. Align panels accurately, with edges plumb and top edges level. Scribe to fit accurately at adjoining work and penetrations.

D. Suspend ceiling baffles at locations and heights as indicated.

3.03 CLEANING

A. Clean fabric facing upon completion of installation from dust and other foreign materials, following manufacturer's instructions.

3.04 PROTECTION

A. Provide protection of installed acoustical panels until Date of Substantial Completion.

B. Replace panels that cannot be cleaned and repaired to satisfaction of the Architect.

END OF SECTION

This page intentionally left blank

SECTION 099123
INTERIOR PAINTING

PART 1 GENERAL

1.01 SECTION INCLUDES

A. Surface preparation.

B. Field application of paints.

C. Scope: Finish interior surfaces exposed to view, unless fully factory-finished and unless otherwise indicated, including the following:
   1. Elevator pit ladders.
   2. Prime surfaces to receive wall coverings.
   3. All miscellaneous steel and unfinished metal elements.
   4. Mechanical and Electrical:
      a. In finished areas, paint insulated and exposed pipes, conduit, boxes, insulated and exposed ducts, hangers, brackets, collars and supports, mechanical equipment, electrical equipment, and eletrical raceways, unless otherwise indicated.

D. Do Not Paint or Finish the Following Items:
   1. Items factory-finished unless otherwise indicated; materials and products having factory-applied primers are not considered factory finished.
   2. Items indicated to receive other finishes.
   3. Items indicated to remain unfinished.
   4. Fire rating labels, equipment serial number and capacity labels, bar code labels, and operating parts of equipment.
   5. Marble, granite, slate, and other natural stones.
   6. Floors, unless specifically indicated.
   7. Ceramic and other tiles.
   8. Glass.
   9. Acoustical materials, unless specifically indicated.
   10. Concealed pipes, ducts, and conduits.
   11. Bathroom and Accessories
   12. FRP Doors

1.02 RELATED REQUIREMENTS

A. Section 016116 - Volatile Organic Compound (VOC) Content Restrictions.

B. Section 092116 - Gypsum Board Assemblies: New and existing wall preparation for final finish.

1.03 DEFINITIONS

A. Comply with ASTM D16 for interpretation of terms used in this section.

1.04 REFERENCE STANDARDS

A. ASTM D16 - Standard Terminology for Paint, Related Coatings, Materials, and Applications.

B. ASTM D4442 - Standard Test Methods for Direct Moisture Content Measurement of Wood and Wood-Based Materials.

C. MPI (APL) - Master Painters Institute Approved Products List; Master Painters and Decorators Association.

D. MPI (APSM) - Master Painters Institute Architectural Painting Specification Manual.

E. SSPC-SP 1 - Solvent Cleaning.

F. SSPC-SP 2 - Hand Tool Cleaning.

1.05 SUBMITTALS

A. See Section 013000 - Administrative Requirements, for submittal procedures.

B. Product Data: Provide complete list of products to be used, with the following information for each:
   1. Manufacturer's name, product name and/or catalog number, and general product category (e.g., "alkyd enamel").
   2. MPI product number (e.g., MPI #47).
   3. Cross-reference to specified paint system(s) product is to be used in; include description of each system.

C. Certification: By manufacturer that paints and finishes comply with VOC limits specified.

1.06 QUALITY ASSURANCE

A. Manufacturer Qualifications: Company specializing in manufacturing the products specified, with minimum three years documented experience.

B. Applicator Qualifications: Company specializing in performing the type of work specified with minimum three years experience and approved by manufacturer.

1.07 DELIVERY, STORAGE, AND HANDLING

A. Deliver products to site in sealed and labeled containers; inspect to verify acceptability.

B. Container Label: Include manufacturer's name, type of paint, brand name, lot number, brand code, coverage, surface preparation, drying time, cleanup requirements, color designation, and instructions for mixing and reducing.

C. Paint Materials: Store at minimum ambient temperature of 45 degrees F and a maximum of 90 degrees F, in ventilated area, and as required by manufacturer's instructions.

1.08 FIELD CONDITIONS

A. Do not apply materials when surface and ambient temperatures are outside the temperature ranges required by the paint product manufacturer.

B. Follow manufacturer's recommended procedures for producing best results, including testing of substrates, moisture in substrates, and humidity and temperature limitations.

C. Minimum Application Temperatures for Paints: 50 degrees F for interiors unless required otherwise by manufacturer's instructions.

D. Provide lighting level of 80 ft candles measured mid-height at substrate surface.

PART 2 PRODUCTS

2.01 MANUFACTURERS

A. Provide paints and finishes from the same manufacturer to the greatest extent possible.
   1. In the event that a single manufacturer cannot provide specified products, minor exceptions will be permitted provided approval by Architect is obtained using the specified procedures for submittals.
   2. Substitution of MPI-approved products by a different manufacturer is preferred over substitution of unapproved products by the same manufacturer.
   3. Substitution of a different paint system using MPI-approved products by the same manufacturer will be considered.

B. Paints:
   1. Behr Process Corporation: www.behr.com/#sle.
   2. Glidden Paint: www.glidden.com
   3. PPG Paints: www.ppgpaints.com/#sle.
   4. Sherwin-Williams Company: www.sherwin-williams.com/#sle.

C. Primer Sealers: Same manufacturer as top coats.

D. Substitutions: Not permitted.

2.02 PAINTS AND FINISHES - GENERAL

A. Paints and Finishes: Ready-mixed, unless intended to be a field-catalyzed paint.

1. Where MPI paint numbers are specified, provide products listed in Master Painters Institute Approved Product List, current edition available at www.paintinfo.com, for specified MPI categories, except as otherwise indicated.
2. Provide paints and finishes of a soft paste consistency, capable of being readily and uniformly dispersed to a homogeneous coating, with good flow and brushing properties, and capable of drying or curing free of streaks or sags.
3. Provide materials that are compatible with one another and the substrates indicated under conditions of service and application, as demonstrated by manufacturer based on testing and field experience.
4. For opaque finishes, tint each coat including primer coat and intermediate coats, one-half shade lighter than succeeding coat, with final finish coat as base color.
5. Supply each paint material in quantity required to complete entire project's work from a single production run.
6. Do not reduce, thin, or dilute paint or finishes or add materials unless such procedure is specifically described in manufacturer's product instructions.

B. Volatile Organic Compound (VOC) Content: Comply with Section 016116.

C. Flammability: Comply with applicable code for surface burning characteristics.

D. Sheens: Provide the sheens specified; where sheen is not specified, sheen will be selected later by Architect from the manufacturer's full line.

E. Colors: As indicated on drawings.
1. Allow for minimum of three colors for each system, unless otherwise indicated, without additional cost to Owner.
2. Extend colors to surface edges; colors may change at any edge as directed by Architect.
3. In utility areas, finish equipment, piping, conduit, and exposed duct work in colors according to the color coding scheme indicated.

2.03 PAINT SYSTEMS - INTERIOR

A. Paint I-TR-C - Transparent Finish on Concrete Floors.
1. 1 coat stain.
2. Sealer: Water Based Sealer for Concrete Floors; MPI #99.
3. Sealer Sheen:
   a. Gloss: MPI gloss level 6; use this sheen at all locations.

B. WI-TR-S -Wood, Transparent, Varnish, No Stain:
1. One coat polyurethane sealer.

C. WI-TR-SS -Wood, Transparent, Varnish, Stain:
1. One coat of stain.
2. One coat sealer; polyurethane sealer, use for all locations unless otherwise indicated..

D. Paint MI-OP-3L - Ferrous Metals, Unprimed, Latex, 3 Coat:
1. One coat of latex primer.
2. Semi-gloss: Two coats of latex enamel.

E. Paint MI-OP-2L - Ferrous Metals, Primed, Latex, 2 Coat:
1. Touch-up with latex primer.
2. Semi-gloss: Two coats of latex enamel; use this sheen for all locations unless otherwise indicated.

F. Paint MgI-OP-3L - Galvanized Metals, Latex, 3 Coat:
1. One coat galvanize primer.
2. Semi-gloss: Two coats of latex enamel.

G. Paint CI-OP-3E - Concrete/Masonry, Epoxy Enamel, 3 Coat:
1. One coat of catalyzed epoxy primer.
2. Gloss: Two coats of catalyzed epoxy enamel; use this sheen for all locations unless otherwise indicated.

H. Paint GI-OP-3LA - Gypsum Board/Plaster, Latex-Acrylic, 3 Coat:
   1. One coat of latex primer sealer.
   2. Eggshell: Two coats of latex-acrylic enamel; use this sheen for all locations unless otherwise indicated.

I. Paint GI-P-1A - Gypsum Board/Plaster, Primer, 1 Coat:
   1. One coat of latex primer sealer.

2.04 PRIMERS

A. Primers: Provide the following unless other primer is required or recommended by manufacturer of top coats.
   1. Interior Institutional Low Odor/VOC Primer Sealer; MPI #149.
   2. Interior/Exterior Latex Block Filler; MPI #4.
   3. Concrete Floor Primer, Waterborne; MPI #99.
   4. Interior Rust-Inhibitive Water Based Primer; MPI #107.
   5. Interior Water Based Primer for Galvanized Metal; MPI #134 or #134 X-Green.

2.05 ACCESSORY MATERIALS

A. Accessory Materials: Provide primers, sealers, cleaning agents, cleaning cloths, sanding materials, and clean-up materials as required for final completion of painted surfaces.

B. Patching Material: Latex filler.

C. Fastener Head Cover Material: Latex filler.

PART 3 EXECUTION

3.01 EXAMINATION

A. Verify that surfaces are ready to receive work as instructed by the product manufacturer.

B. Examine surfaces scheduled to be finished prior to commencement of work. Report any condition that may potentially affect proper application.

C. If substrate preparation is the responsibility of another installer, notify Architect of unsatisfactory preparation before proceeding.

D. Test shop-applied primer for compatibility with subsequent cover materials.

E. Measure moisture content of surfaces using an electronic moisture meter. Do not apply finishes unless moisture content of surfaces is below the following maximums:
   1. Gypsum Wallboard: 12 percent.
   2. Plaster and Stucco: 12 percent.
   3. Interior Wood: 15 percent, measured in accordance with ASTM D4442.
   4. Concrete Floors and Traffic Surfaces: 8 percent.

3.02 PREPARATION

A. Clean surfaces thoroughly and correct defects prior to application.

B. Prepare surfaces using the methods recommended by the manufacturer for achieving the best result for the substrate under the project conditions.

C. Remove or repair existing paints or finishes that exhibit surface defects.

D. Remove or mask surface appurtenances, including electrical plates, hardware, light fixture trim, escutcheons, and fittings, prior to preparing surfaces or finishing.

E. Seal surfaces that might cause bleed through or staining of topcoat.

F. Remove mildew from impervious surfaces by scrubbing with solution of tetra-sodium phosphate and bleach. Rinse with clean water and allow surface to dry.

G. Masonry:

1. Remove efflorescence and chalk. Do not coat surfaces if moisture content, alkalinity of surfaces, or if alkalinity of mortar joints exceed that permitted in manufacturer's written instructions. Allow to dry.
2. Prepare surface as recommended by top coat manufacturer.
3. Clean surfaces with pressurized water. Use pressure range of 600 to 1,500 psi at 6 to 12 inches. Allow to dry.

H. Concrete Floors and Traffic Surfaces: Remove contamination, acid etch and rinse floors with clear water. Verify required acid-alkali balance is achieved. Allow to dry.

I. Gypsum Board: Fill minor defects with filler compound. Spot prime defects after repair.

J. Plaster: Fill hairline cracks, small holes, and imperfections with latex patching plaster. Make smooth and flush with adjacent surfaces. Wash and neutralize high-alkali surfaces.

K. Insulated Coverings: Remove dirt, grease, and oil from canvas and cotton.

L. Galvanized Surfaces:
1. Remove surface contamination and oils and wash with solvent according to SSPC-SP 1.
2. Prepare surface according to SSPC-SP 2.

M. Ferrous Metal:
1. Solvent clean according to SSPC-SP 1.
2. Shop-Primed Surfaces: Sand and scrape to remove loose primer and rust. Feather edges to make touch-up patches inconspicuous. Clean surfaces with solvent. Prime bare steel surfaces. Re-prime entire shop-primed item.
3. Remove rust, loose mill scale, and other foreign substances using methods recommended in writing by paint manufacturer and blast cleaning according to SSPC-SP 6 Commercial Blast Cleaning. Protect from corrosion until coated.

3.03 APPLICATION

A. Remove unfinished louvers, grilles, covers, and access panels on mechanical and electrical components and paint separately.

B. Apply products in accordance with manufacturer's written instructions and recommendations in "MPI Architectural Painting Specification Manual".

C. Where adjacent sealant is to be painted, do not apply finish coats until sealant is applied.

D. Do not apply finishes to surfaces that are not dry. Allow applied coats to dry before next coat is applied.

E. Apply each coat to uniform appearance in thicknesses specified by manufacturer.

F. Dark Colors and Deep Clear Colors: Regardless of number of coats specified, apply as many coats as necessary for complete hide.

G. Vacuum clean surfaces of loose particles. Use tack cloth to remove dust and particles just prior to applying next coat.

H. Reinstall electrical cover plates, hardware, light fixture trim, escutcheons, and fittings removed prior to finishing.

3.04 CLEANING

A. Collect waste material that could constitute a fire hazard, place in closed metal containers, and remove daily from site.

3.05 PROTECTION

A. Protect finishes until completion of project.

B. Touch-up damaged finishes after Substantial Completion.

3.06 SCHEDULE - PAINT SYSTEMS

A. Concrete Floors: Transparent finish for concrete floors
1. Interior: I-TR-C, gloss

B. Concrete, Concrete Masonry Units (CMU), Concrete Block, Brick Masonry: Finish surfaces exposed to view.
   1. Interior: CI-OP-3L, semi-gloss.

C. Gypsum Board: Finish surfaces exposed to view.

D. Plaster: Finish surfaces exposed to view.
   1. Interior Walls and Ceilings: GI-OP-3LA.

E. Wood: Finish surfaces exposed to view.
   1. Interior trim and frames: WI-TR-S, no stain.
   2. Interior trim and frames: WI-TR-SS, stained.

F. Wood Doors: WI-TR-SS for matching existing doors, otherwise use factory finish new doors.

G. Steel Doors and Frames: Finish surfaces exposed to view; MI-OP-3L, gloss.

H. Steel Fabrications: Finish surfaces exposed to view.
   1. Interior: MI-OP-3L, gloss.

I. Galvanized Steel: Finish surfaces exposed to view.
   1. Interior: MgI-OP-3L.

J. Shop-Primed Metal Items: Finish surfaces exposed to view.
   1. Finish the following items:
      a. Exposed surfaces of steel stairs and railings.
      b. Mechanical equipment.
   2. Interior: MI-OP-2L.

END OF SECTION

SECTION 099733
ENCAPSULATION OF ASBESTOS CONTAINING MATERIALS

PART 1 GENERAL

1.01 DESCRIPTION OF WORK

A. The work includes the encapsulating of the following:
   1. Lock down of removal work areas and abated surfaces
   2. Sealing of exposed edges
   3. Architectural Finish

1.02 SUBMITTALS

A. Product Data: Submit manufacturer's technical information including label analysis and application instructions for each material proposed for use.

B. Material Safety Data Sheet: Submit the Material Safety Data Sheet, or equivalent, in accordance with the OSHA Hazard Communication Standard (29 CFR 1910.1200) for each surfactant and encapsulating material proposed for use on the work. Include a separate attachment for each sheet indicating the specific worker protective equipment proposed for use with the material indicated.

C. Installation Instructions: Submit manufacturer's installation instructions with specific project requirements noted.

1.03 DELIVERY AND STORAGE

A. Deliver materials to the job site in original, new and unopened packages and containers bearing manufacturer's name and label, and following information:
   1. Name or title of material
   2. Manufacturer's stock number and date of manufacture
   3. Manufacturer's name
   4. Thinning instructions
   5. Application instructions

B. Deliver materials together with a copy of the OSHA Material Safety Data Sheet for the material.

1.04 JOB CONDITIONS

A. Apply encapsulating materials only when environmental conditions in the work area are as required by the manufacturer's instructions.

PART 2 PRODUCTS

2.01 ENCAPSULANTS

A. Provide penetrating, bridging type, and/or lockdown encapsulants specifically designed for application to the asbestos-containing material and abated surfaces to which it is being applied and is compatible with the substrate.

PART 3 EXECUTION

3.01 GENERAL

A. Prior to applying any encapsulating material, ensure that application of the sealer will not cause the base material to fail and allow the sealed material to fall of its own weight or separate from the substrate. Should Contractor doubt the ability of the installation to support the sealant, request direction from the Manufacturer before proceeding with the encapsulating work.

B. Do Not Commence Application of encapsulating materials until all removal work within the work area has been completed.

3.02 WORKER PROTECTION

A. Before beginning work with any material for which a Material Safety Data Sheet has been submitted provide workers with the required protective equipment, which may include

combination HEPA/chemical cartridges. Require that appropriate protective equipment be used at all times.

3.03 ENCAPSULATION (LOCKDOWN) OF ABATED SURFACES

A. Color the lockdown encapsulant so that visual confirmation of complete and uniform coverage of each coat is possible. Adhere to manufacturer's instructions for coloring.

B. Encapsulate all surfaces in full compliance with manufacturer’s instructions.

3.04 SEALING EXPOSED EDGES

A. Seal edges of Asbestos-Containing Material exposed by removals with two (2) coats of encapsulant.

B. Prior to sealing, permit the exposed edges to dry completely to permit penetration of the sealer.

C. Color the encapsulant contrasting colors in alternate coats so that visual confirmation of complete and uniform coverage of each coat is possible. Adhere to manufacturer's instructions for coloring. At the completion of work the encapsulated surface must be a uniform third color produced by the mixture.

3.05 ARCHITECTURAL FINISH

A. Examine Existing Conditions: Determine if the friable Asbestos-Containing Material to be encapsulated remains sufficiently bonded to receive the encapsulation process and if process will effectively prevent release of asbestos fibers from the material. If the existing
   1. Asbestos-Containing Material is loose and deteriorated, the Contractor must immediately notify the Owner's Representative that removal of friable Asbestos-Containing Material must be accomplished before encapsulation.

B. Before start of work on an architectural finish complete the work of the following:
   1. Section 015733 Worker Protection
   2. Section 015736 Respiratory Protection
   3. Section 015643 Temporary Enclosures
   4. Section 015726 Decontamination Units

C. Comply with all manufacturer's instructions for particular conditions of installation in each case. Consult with manufacturer's technical representative for conditions not covered.

D. Encapsulate all surfaces in full compliance with manufacturer's procedures.

E. At completion of Encapsulation and before removal of Work Area enclosures and Negative Pressure System, decontaminate space in accordance with requirements of Sections 017333 Project Decontamination.

END OF SECTION

SECTION 101400
SIGNAGE

PART 1 GENERAL

1.01 SECTION INCLUDES

A. Room identification and interior door signs.

B. Window Signs

C. Exterior Door Signs

D. Rest room identification signs.

E. Enclosed stairwell signs.

1.02 REFERENCE STANDARDS

A. St. Louis County Police and Fire Chiefs Premises Identification Ordinance - Guidelines for Premises Identification for Educational Group E Facilities.

B. 36 CFR 1191 - Americans with Disabilities Act (ADA) Accessibility Guidelines for Buildings and Facilities; Architectural Barriers Act (ABA) Accessibility Guidelines.

C. ADA Standards - 2010 ADA Standards for Accessible Design.

D. ICC A117.1 - Accessible and Usable Buildings and Facilities.

1.03 SUBMITTALS

A. See Section 013000 - Administrative Requirements, for submittal procedures.

B. Product Data: Manufacturer's printed product literature for each type of sign, indicating sign styles, font, foreground and background colors, locations, overall dimensions of each sign.

C. Signage Schedule: Provide information sufficient to completely define each sign for fabrication, including room number, room name, other text to be applied, sign and letter sizes, fonts, and colors.
   1. When room numbers to appear on signs differ from those on drawings, include the drawing room number on schedule.
   2. When content of signs is indicated to be determined later, request such information from Owner through Architect at least 2 months prior to start of fabrication; upon request, submit preliminary schedule.
   3. Submit for approval by Owner through Architect prior to fabrication.

D. Selection Samples: Where colors are not specified, submit two sets of color selection charts or chips.

1.04 QUALITY ASSURANCE

1.05 DELIVERY, STORAGE, AND HANDLING

A. Package signs as required to prevent damage before installation.

B. Package room identification and door frame signs in sequential order of installation, labeled by floor or building.

PART 2 PRODUCTS

2.01 SIGNAGE APPLICATIONS

A. Accessibility Compliance: Signs are required to comply with ADA Standards and ICC A117.1 and applicable building codes, unless otherwise indicated; in the event of conflicting requirements, comply with the most comprehensive and specific requirements.

B. Room Identification Signs: Provide a sign for every doorway, whether it has a door or not, within the limits of the Work as scheduled.
   1. Sign Type: Flat signs with frame with engraved panel media as specified.
   2. Provide "tactile" signage, with letters raised minimum 1/32 inch and Grade II braille.

3. Character Height: 1 inch.
4. Sign Size: 6 inches height by 8 inches width.
5. Sign Text:
   a. First Line: Room number as shown on the drawings.
   b. Second Line: Braille message including first line text information.
6. Example sign indicating layout requirements follows:

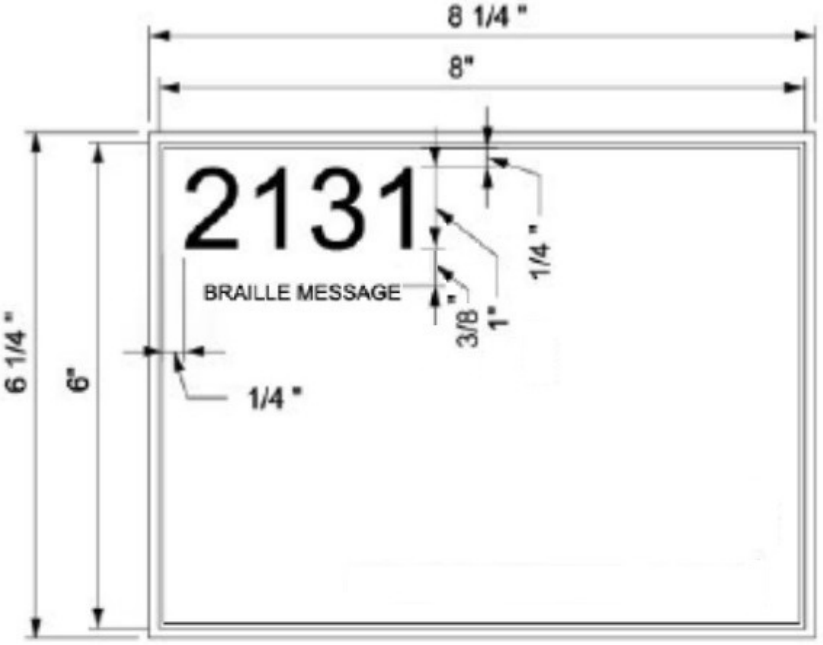

7. Rest Room Identification Signs: Provide a room identification sign and a pictogram sign for every restroom doorway, whether it has a door or not, within the limits of the Work as scheduled.
   a. Sign Type:
      1) Room Identification Signs: Flat signs with frame with engraved panel media as specified.
      2) Pictogram Signs: Flat signs without frame and beveled edges with engraved panel media as specified.
   b. Provide "tactile" signage, with letters raised minimum 1/32 inch and Grade II braille.
   c. Character Height: 1 inch.
   d. Pictogram Height:
      1) International Women Pictogram: 4 inches.
      2) International Men Pictogram: 4 inches.
      3) International Accessible Pictogram: 2-7/8 inches.
   e. Sign Size:
      1) 6 inches height by 8 inches width for room identification sign and dual pictogram sign.
      2) 6 inches height by 6 inches width for single pictogram sign.
   f. Room Identification Sign Text:
      1) First Line: Room number as shown on the drawings.
      2) Second Line: Identify with "MEN" and "WOMEN".
      3) Third Line: Braille message including first line and second line text information.
   g. Pictogram Application:

1) When sign text is "MEN" and restroom is not accessible use international men pictogram on single pictogram sign.
2) When sign text is "WOMEN" and restroom is not accessible use international women pictogram on single pictogram sign.
3) When sign text is "MEN" and restroom is accessible use international men pictogram and international accessible pictogram on dual pictogram sign.
4) When sign text is "WOMEN" and restroom is accessible use international women pictogram and international accessible pictogram on dual pictogram sign.

h. Example room identification sign indicating layout requirements follows:

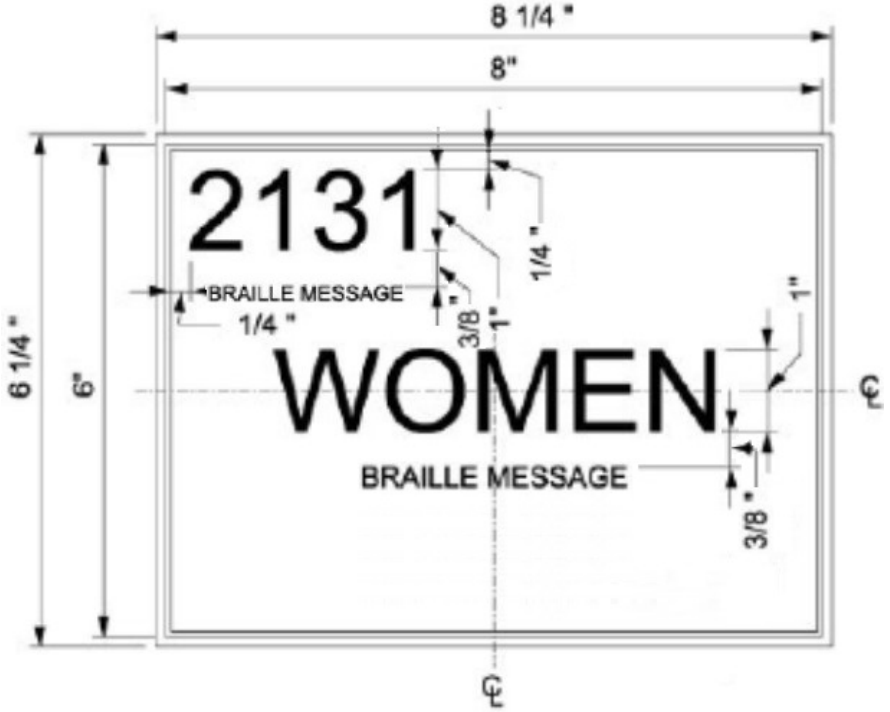

i. Example dual pictogram sign indicating layout requirements follows:

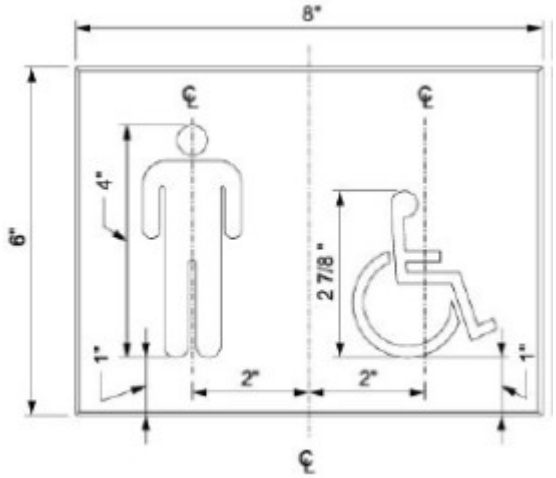

j. Example single pictogram sign indicating layout requirements follows:

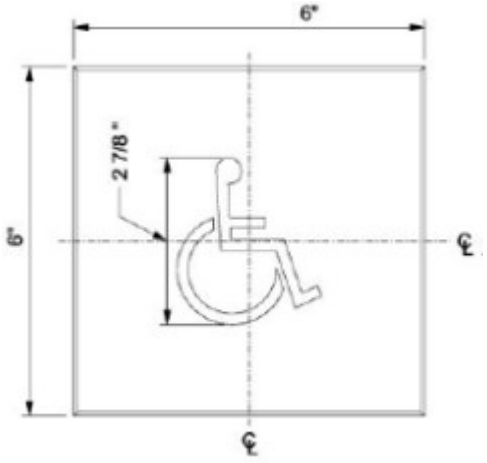

C. Interior Door Signs: Provide a sign above every interior door frame within the limits of the Work as scheduled.

1. Sign Type: Flat signs with numerical room number on ingress/corridor side and egress/room side of door without frame assigned the color of the zone they occupy. Room numbers shall be readable from all angles from the corridor or area to which they open. Use projected signs as required for readability with numbers on both sides. Door flush signs to have room numbers on one side.
2. Character Height: 4 inches.
3. Sign Size: 6 inches height by 14 inches width.
4. Sign Text: Room number as shown on the drawings.
5. Sign is not required to meet ADA Standards for Accessible Design.
6. Example sign indicating layout requirements follows:

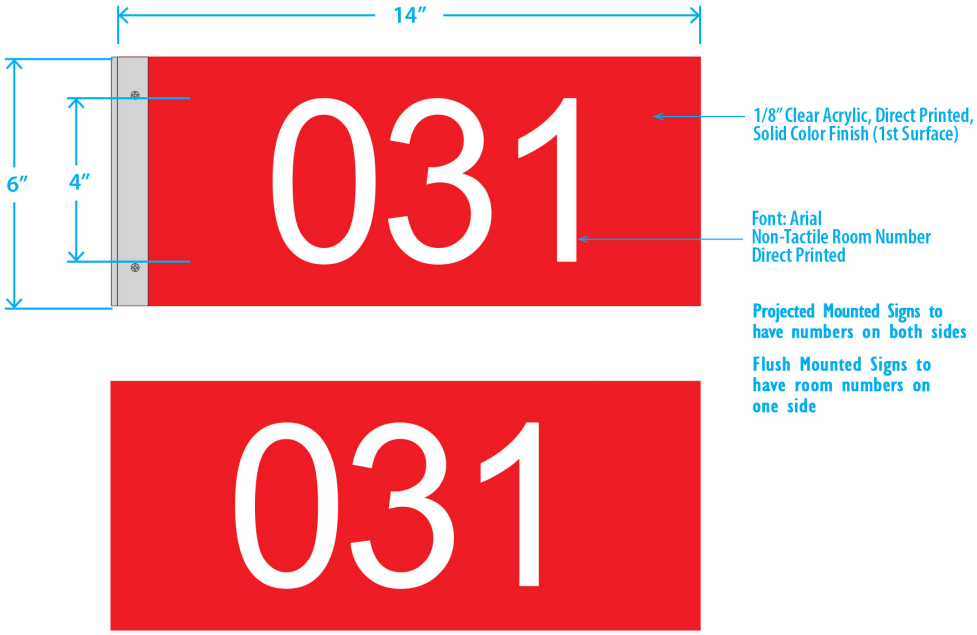

Interior Doors:

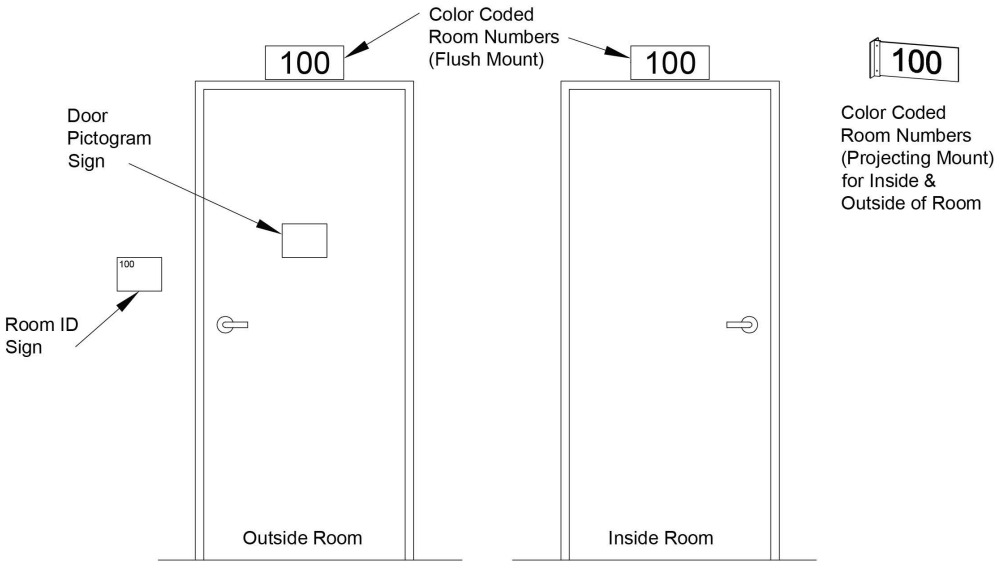

D. Window Signs: Provide a sign on left most facing window mounted on the interior or exterior visible from the exterior within the limits of the Work as scheduled.
   1. Sign Type: Flat signs with numerical room number mounted on left most facing exterior window without frame assigned the color of the zone they occupy. Window flush signs to have room numbers on one side visible from the exterior.
   2. Character Height: 6 inches.
   3. Sign Size: 8 inches height by 18 inches width.
   4. Sign Text: Room number as shown on the drawings.
   5. Sign is not required to meet ADA Standards for Accessible Design.
   6. Example sign indicating layout requirements follows:



E. Exterior Door Signs: Exterior doors are to be numbered in sequential order starting with the main entrance #1 within the limits of the Work as scheduled. Subsequent door shall be numbered in sequential order in a clockwise manner.
   1. Sign Type: Flat signs with numerical door number mounted on exterior and interior side of door without frame assigned the color of the zone they occupy.
   2. Character Height:
      a. Exterior of door: 6 inches.
      b. Interior of door: 4 inches.
   3. Sign Size:

a. Exterior of door: 8 inches height by 12 inches width.
b. Interior of door: 6 inches height by 9 inches width.

4. Sign Text: Room number as shown on the drawings.
5. Sign is not required to meet ADA Standards for Accessible Design.
6. Example sign indicating layout requirements follows:

Exterior:

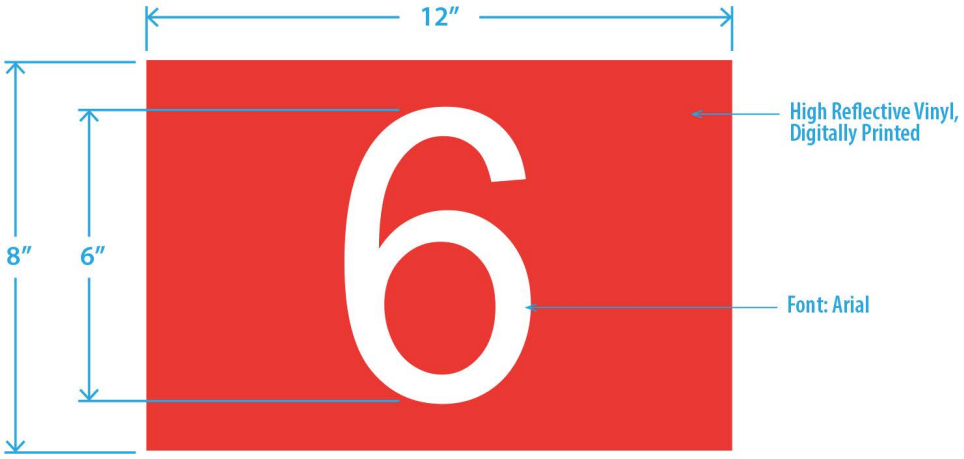

Interior:

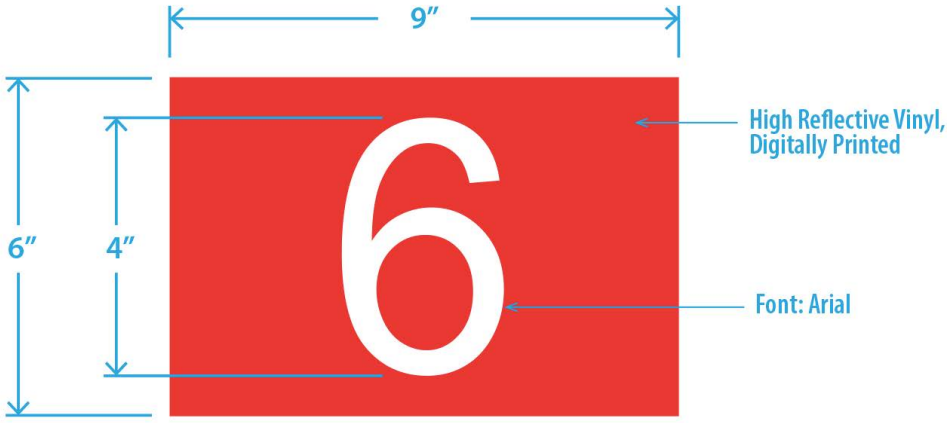

Exterior Doors:

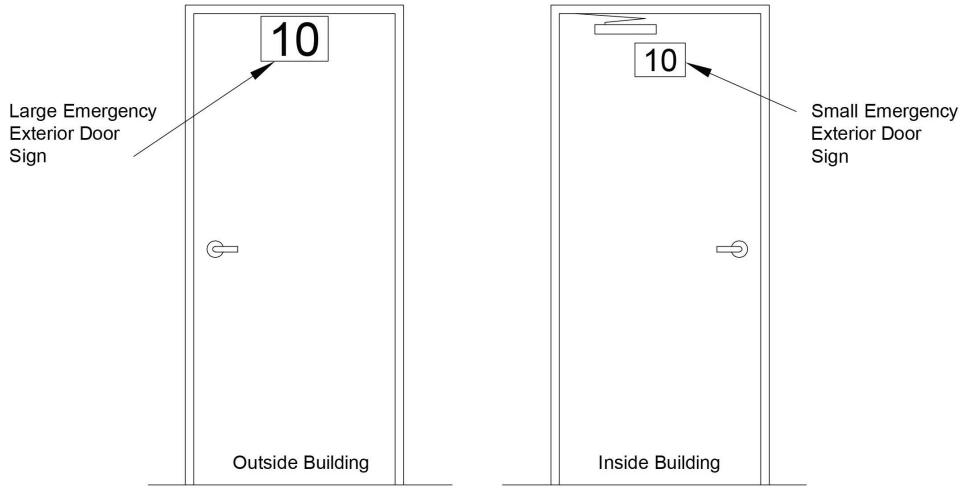

F. Enclosed Stairwell Signs: Provide a sign for each floor landing in stairwell exit enclosures designating the floor level, the terminus of the top and bottom of the exit enclosure and the identification of the stair.
   1. Sign Type: Flat signs without frame and beveled edges with engraved panel media as specified.
   2. Provide "tactile" signage, with letters raised minimum 1/32 inch and Grade II braille.
   3. Character Height:
      a. Identification of the stair enclosure number: 1-1/2 inch.
      b. Identification of the floor number: 5 inches.
      c. All other lettering and numbers: 1 inch.
   4. Sign Size: Minimum 18 inches height by 12 inches width, adjust size to fit text.
   5. Sign Text:
      a. First Line: Stair enclosure number shown on the drawings.
      b. Second Line: Floor level number and total number of levels.
      c. Third Line: Floor number shown on the drawings, which may not coincide with the level number.
      d. Fourth Line: Availability of roof access with the message "ROOF ACCESS" or "NO ROOF ACCESS" as applicable.
      e. Fifth Line: Exit discharge direction and level of exit discharge.
   6. Example sign indicating layout requirements follows:

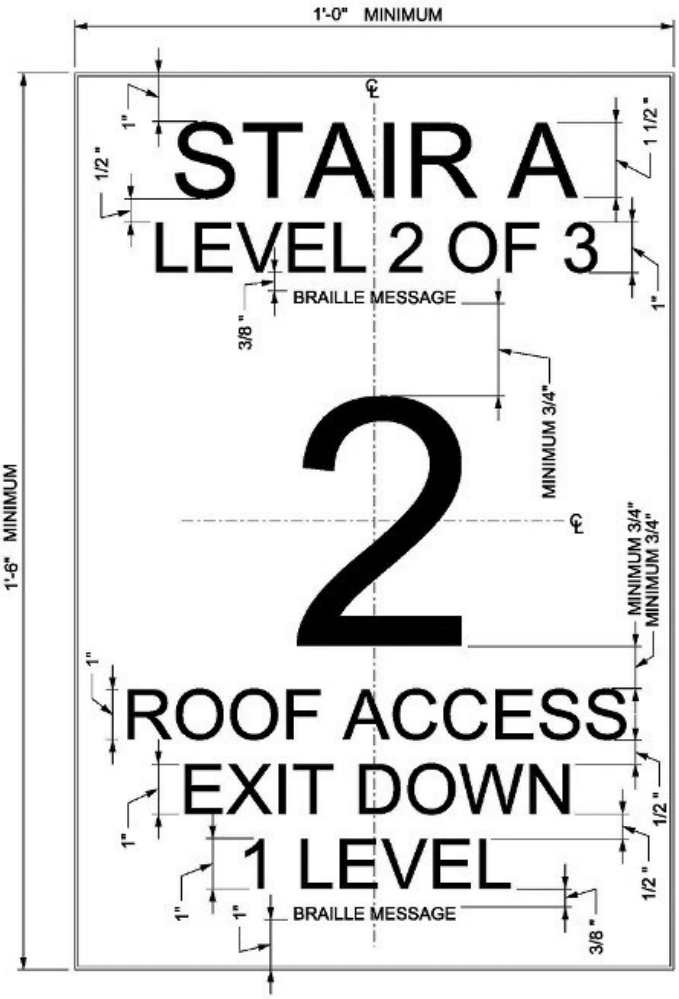

2.02 SIGN TYPES

A. Flat Signs: Signage media with frame.
   1. Basis of Design: Gravotech, Inc.; www.gravograph.us
   2. Edges: Square.
   3. Corners: Square.
   4. Removable signage media held in frame with adhesive snap locks, model Gravograph 36352.
   5. Frame:
      a. Molded plastic, color black.
      b. Size 6 inch by 6 inch, model Gravograph 35025.
      c. Size 6 inch by 8 inch or 8 inch by 6 inch, model Gravograph 35028.
   6. Wall Mounting of Signs: Concealed screws.

B. Flat Signs: Signage media without frame.
   1. Edges: Bevelled.
   2. Corners: Square.
   3. Wall Mounting of Signs: Exposed screw.

C. Interior Door and Window Signs (mounted on interior):
   1. Edges: Square
   2. Corners: Square

3. Mounting of Signs: Tape adhesive
4. Core: Sintra or equal foam PVC 3mm thick.
5. Finish: UV Cured Ink

D. Exterior Door and Window Signs (mounted on exterior):
1. Edges: Square
2. Corners: Square
3. Mounting of Signs: Use clear silicone adhesive
4. Core: Dibond or equal aluminum clad foam PVC core 3mm thick.
5. Finish: UV Cured Ink

E. Color and Font: Unless otherwise indicated:
1. Character Font: Helvetica, Arial, or other sans serif font.
a. Characters shall not be italic, oblique, script, highly decorative, or of other unusual forms.
2. Character Case: Upper case only.
3. Background Color:
a. Room Identification and Pictogram Signs - Black
b. Interior Door Signs, Window Signs, and Exterior Door Signs assigned the color of the zone they occupy
4. Character Color: White.

F. Pictograms: Provide standard international symbols for men, women, and accessible rest rooms.

2.03 TACTILE SIGNAGE MEDIA

A. Engraved Panels: Laminated colored plastic; engraved through face to expose core as background color:
1. Total Thickness: 1/16 inch.

2.04 NON-TACTILE SIGNAGE MEDIA

A. Engraved Panels: Laminated colored plastic; engraved through face to expose core as text color:
1. Total Thickness: 1/16 inch.

2.05 SAFETY SIGNAGE - ZONE IDENTIFICATION

A. Zone Designation: All occupiable structures on the premises shall be divided into sections or designated a specific zone agreeable to the AHJ.

B. Zone Color Assignment: The zones shall be assigned a primary or secondary color. Other colors may be used/added of approved by the AHJ.



RED
C: 0% M: 100% Y: 100% K: 0%
R: 237 G: 28 B: 36



ORANGE
C: 6% M: 68% Y: 91% K: 0%
R: 229 G: 114 B: 50

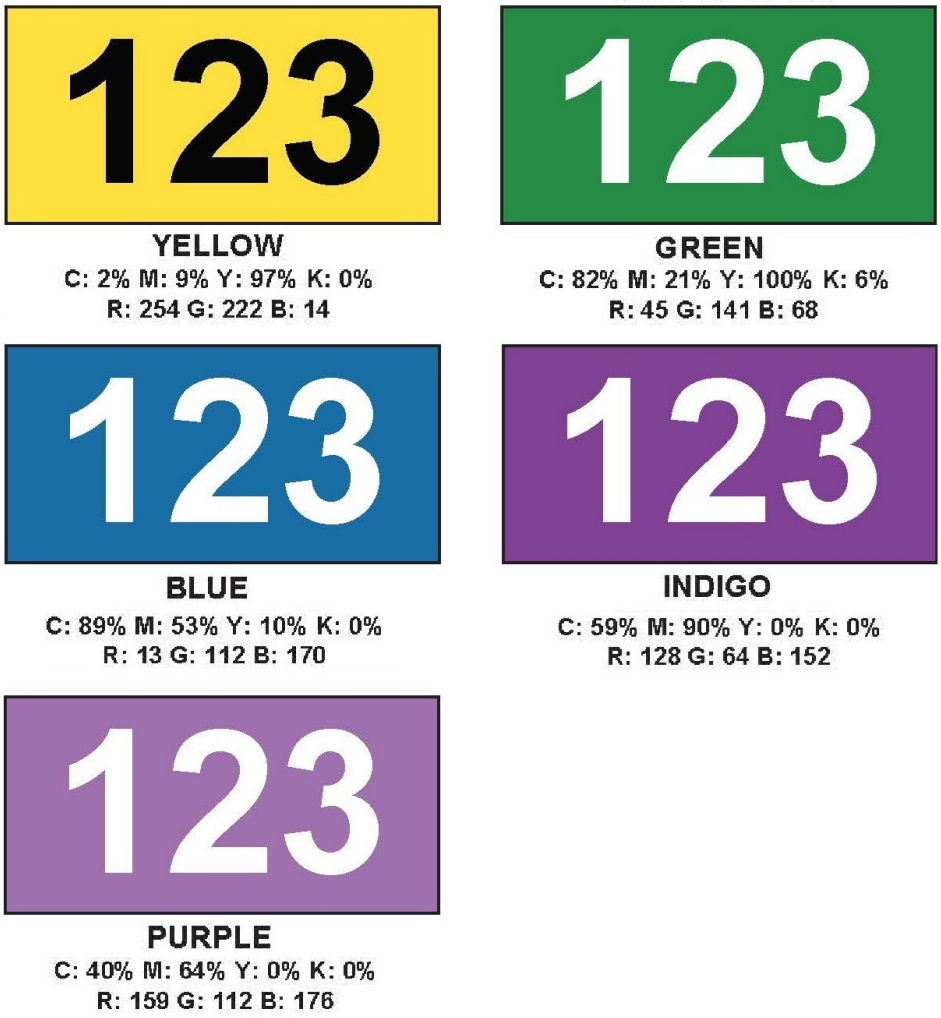

2.06 ACCESSORIES

A. Concealed Screws: Stainless steel, galvanized steel, chrome plated, or other non-corroding metal.

B. Exposed Screws: Stainless steel.

PART 3 EXECUTION

3.01 EXAMINATION

A. Verify that substrate surfaces are ready to receive work.

3.02 INSTALLATION

A. Install in accordance with manufacturer's instructions.

B. Install neatly, with horizontal edges level.

C. Locate signs as follows unless otherwise indicated:

1. Room Identification Signs:
    a. Mounting height at 48 inches above finished floor to bottom outside edge of sign frame.
    b. Locate on wall at latch side of door as close as possible to the door with a minimum distance of 6 inches from latch edge of door to closest vertical outside edge of sign frame.

c. At double doors, the sign shall be to the right of the right-hand door.
d. Where there is no wall space on the latch side of a single door, or to the right side of double doors, signs shall be on the nearest adjacent wall.

2. Rest Room Identification Signs:
   a. Room Identification Signs: Same height and location as other room identification signs.
   b. Pictogram Signs:
      1) Mounting height 54 inches above finished floor to bottom edge of sign.
      2) Locate sign centered on vertical centerline of door.
      3) Where the restroom has no door, locate directly above the room identification sign at a mounting height of 55 inches above finished floor to bottom edge of sign.
3. Door Signs:
   a. Interior flush signs: Locate above door frame on ingress/corridor side and egress/room side centered on the horizontal centerline of the door frame head with bottom of sign resting on the top of the door frame.
   b. Interior pedestal signs: Use projected signs as required for readability with numbers on both sides.
   c. Provide 2 fasteners, one at each end of the sign on the horizontal centerline of sign.
4. Window Signs:
   a. Mount to exterior window on the interior (or exterior if interior has security flim installed) of the left most facing window. Attach to glass so it is visible from the exterior.
5. Enclosed Stairwell Signs:
   a. Mounting height 60 inches above finished floor to top edge of sign.
   b. Locate sign in same location as room identification signs.
   c. At double doors, locate sign so that it can be seen whether the door is open or closed.
   d. Provide 4 fasteners, one at each corner of the sign.
6. If no location is indicated obtain Owner's instructions.

D. Protect from damage until Date of Substantial Completion; repair or replace damaged items.

3.03 SCHEDULE

A. Provide signs at the following locations as scheduled:
1. Room Identification Signs and Door Signs:
   a. Doorways see drawings.
2. Rest Room Identification Signs
   a. Doorways see drawings with text "BOYS" - Accessible.
   b. Doorways see drawings with text "GIRLS" - Accessible.
   c. Doorways see drawings with text "MEN" - Accessible.
   d. Doorways see drawings with text "WOMEN" - Accessible.
3. Enclosed Stairwell Signs

END OF SECTION

This page intentionally left blank

SECTION 102113.19
PLASTIC TOILET COMPARTMENTS

PART 1 GENERAL

1.01 SECTION INCLUDES

A. Solid plastic toilet compartments.

B. Urinal screens.

1.02 RELATED REQUIREMENTS

A. Section 055000 - Metal Fabrications: Concealed steel support members.

B. Section 061000 - Rough Carpentry: Blocking and supports.

C. Section 102800 - Toilet, Bath, and Laundry Accessories.

1.03 REFERENCE STANDARDS

A. ASTM A666/A666M - Standard Specification for Annealed or Cold-Worked Austenitic Stainless Steel Sheet, Strip, Plate, and Flat Bar.

B. ASTM E84 - Standard Test Method for Surface Burning Characteristics of Building Materials.

1.04 ADMINISTRATIVE REQUIREMENTS

A. Coordination: Coordinate the work with placement of support framing and anchors in walls and ceilings.

1.05 SUBMITTALS

A. See Section 013000 - Administrative Requirements, for submittal procedures.

B. Product Data: Provide data on panel construction, hardware, and accessories.

C. Shop Drawings: Indicate partition plan, elevation views, dimensions, details of wall and floor supports, door swings.

D. Samples: Color chart showing manufacturers full range of colors.

PART 2 PRODUCTS

2.01 MANUFACTURERS

A. Solid Plastic Toilet Compartments:
   1. ASI Global Partitions; _____: www.asi-globalpartitions.com/#sle.
   2. Scranton Products; Aria Partitions: www.scrantonproducts.com/#sle.
   3. Bobrick Washroom Equipment, Inc; Sierra Series; www.bobrick.com.
   4. Substitutions: Section 016000 - Product Requirements.

2.02 PLASTIC TOILET COMPARTMENTS

A. Toilet Compartments: Factory fabricated doors, pilasters, and divider panels made of solid molded high density polyethylene (HDPE), tested in accordance with NFPA 286, floor-mounted headrail-braced or made of solid color reinforced composite (SCRC), tested in accordance with ASTM E84, Class B, floor-mounted headrail-braced.
   1. Color: as selected by the architect from a full range of colors.

B. Doors:
   1. Thickness: 1 inch.
   2. Width: 24 inch.
   3. Width for Handicapped Use: 36 inch, out-swinging.
   4. Height: 55 inch.

C. Panels:
   1. Thickness: 1 inch.
   2. Height: 55 inch.
   3. Depth: As indicated on drawings.

D. Pilasters:
   1. Thickness: 1 inch.
   2. Width: As required to fit space; minimum 3 inch.

E. Screens: Without doors; to match compartments; mounted to wall with two panel brackets.

2.03 ACCESSORIES FOR TOILET PARTITIONS AND SCREENS

A. Pilaster Shoes: Formed ASTM A666, Type 304 stainless steel with satin finish, 3 in high, concealing floor fastenings.
   1. Provide adjustment for floor variations with screw jack through steel saddles integral with pilaster.

B. Head Rails: anodized aluminum, 1 inch by 1-1/2 inch size with anti-grip profile and cast socket wall brackets..

C. Pilaster Brackets: Satin stainless steel.

D. Wall Brackets: Continuous type, satin stainless steel.

E. Attachments, Screws, and Bolts: Stainless steel , tamper proof type.
   1. For attaching panels and pilasters to brackets: Through-bolts and nuts ; tamper proof.

F. Hardware: Polished stainless steel:
   1. Continuous gear hinges, gravity type, adjustable for door close positioning.
   2. Nylon bearings.
   3. Door Latch: Slide type with exterior emergency access feature.
   4. Door strike and keeper with rubber bumper; mounted on pilaster in alignment with door latch.
   5. Coat hook with rubber bumper; one per compartment, mounted on door.
      a. Provide two per compartment for ADA accessible cubicles.
   6. Provide door pull on both sides of door for ADA accessible cubicles.

PART 3 EXECUTION

3.01 EXAMINATION

A. Verify that field measurements are as indicated.

B. Verify correct spacing of and between plumbing fixtures.

C. Verify correct location of built-in framing, anchorage, and bracing.

3.02 INSTALLATION

A. Install partitions secure, rigid, plumb, and level in accordance with manufacturer's instructions.

B. Maintain 3/8 to 1/2 inch (9 to 13mm) space between wall and panels and between wall and end pilasters.

C. Attach panel brackets securely to walls using anchor devices.

D. Attach panels and pilasters to brackets. Locate head rail joints at pilaster center lines.

E. Field touch-up of scratches or damaged finish will not be permitted. Replace damaged or scratched materials with new materials.

3.03 TOLERANCES

A. Maximum Variation From True Position: 1/4 inch (6mm).

B. Maximum Variation From Plumb: 1/8 inch (3mm).

3.04 ADJUSTING

A. Adjust and align hardware to uniform clearance at vertical edge of doors, not exceeding 3/16 inch (5mm).

B. Adjust hinges to position doors in partial opening position when unlatched. Return out-swinging doors to closed position.

C. Adjust adjacent components for consistency of line or plane.

END OF SECTION

This page intentionally left blank

SECTION 102213
WIRE MESH PARTITIONS

PART 1 GENERAL

1.01 SECTION INCLUDES

A. Wire mesh systems for walls, ceilings, and stairways.

1.02 RELATED REQUIREMENTS

A. Section 087100 - Door Hardware: Cylinders for locksets.

B. Section 099123 - Interior Painting.

1.03 REFERENCE STANDARDS

A. ASTM A36/A36M - Standard Specification for Carbon Structural Steel.

B. ASTM A123/A123M - Standard Specification for Zinc (Hot-Dip Galvanized) Coatings on Iron and Steel Products.

C. ASTM A500/A500M - Standard Specification for Cold-Formed Welded and Seamless Carbon Steel Structural Tubing in Rounds and Shapes.

D. ASTM A510M - Standard Specification for General Requirements for Wire Rods and Coarse Round Wire, Carbon Steel (Metric); 2008.

1.04 SUBMITTALS

A. See Section 013000 - Administrative Requirements, for submittal procedures.

B. Product Data: Provide data for mesh materials, finishes.

C. Shop Drawings: Indicate plan and vertical dimensions, elevations, component details; head, jamb, and sill details; location of hardware. Provide component details, anchorage, and type and location of fasteners.
   1. Show field measurements on shop drawings.

PART 2 PRODUCTS

2.01 MANUFACTURERS

A. Wire Mesh Partitions:
   1. Acorn Wire and Iron Works, Inc: www.acornwire.com/#sle.
   2. The G-S Company; Sure Guard Standard Duty: www.g-sco.com/#sle.
   3. Miller Wire Works, Inc; standard 2 inch square: www.millerwireworks.com/#sle.
   4. Spaceguard Products; BeastWire Mesh Partitions with Standard Welded Wire Mesh- 2 inch square: www.spaceguardproducts.com/#sle.
   5. Substitutions: See Section 016000 - Product Requirements.

2.02 WIRE MESH PARTITIONS

A. Wire Mesh Partitions: Factory-fabricated modular assemblies of panels, doors, anchors, hardware, and accessories as required to provide a complete system. Standard welded wire mech 2 inch square.

2.03 COMPONENTS

A. Framing and Support Members:
   1. Material: ASTM A36/A36M steel shapes and ASTM A500/A500M cold-formed steel tubing.
   2. Framing, Corner Posts, and Intermediate Support Members: Manufacturer's standard sizes for system specified and as indicated on drawings.
   3. Vertical Stiffeners: As required for partitions greater than 144 inches in height.

2.04 FASTENERS

A. Bolts, Nuts and Washers: Hot dip galvanized.

B. Anchorage Devices: Provide power driven, powder actuated, and drilled expansion bolts.

C. Exposed Mechanical Fastenings: Flush countersunk screws or bolts, unobtrusively located, consistent with design of structure.

2.05 ACCESSORIES

A. Bracing: Formed sheet steel, thickness determined for conditions encountered, manufacturer's standard shapes, same finish as framing members.

B. Plates, Gussets, Clips: Formed sheet steel, thickness determined for conditions encountered, manufacturer's standard shapes, same finish as framing members.

C. Post Caps: Manufacturer's standard.

D. Floor and Ceiling Pilaster Shoe: Manufacturer's standard.

E. Floor Base: Manufacturer's standard.

2.06 FABRICATION

A. Fit and assemble in largest practical sections for delivery to site, ready for installation.

B. Make exposed joints flush or tight.

C. Provide mortised and tenoned joints for framing members.

D. Provide components required for anchorage to adjacent construction.

E. Frame openings made for penetrating mechanical and electrical components.

2.07 FINISHES

PART 3 EXECUTION

3.01 EXAMINATION

A. Verify that field measurements are as indicated.

B. Verify that substrate surfaces and required openings are ready to receive work.

3.02 PREPARATION

A. Clean substrate surfaces.

B. Clean partition surfaces of rust, scale, grease, and foreign matter prior to field finishing as specified in Section 099123.

3.03 INSTALLATION

A. Install in accordance with manufacturer's instructions.

B. Install items plumb and level, accurately fitted, free from distortion or defects.

3.04 TOLERANCES

A. Maximum Variation From Plumb or Level: 1/4 inch.

B. Maximum Misalignment From True Position: 1/4 inch.

3.05 CLEANING

A. Remove temporary protection to prefinished surfaces.

END OF SECTION

SECTION 102601
WALL AND CORNER GUARDS

PART 1 GENERAL

1.01 SECTION INCLUDES

A. Corner guards.

1.02 REFERENCE STANDARDS

A. ASTM E84 - Standard Test Method for Surface Burning Characteristics of Building Materials.

B. ASTM E119 - Standard Test Methods for Fire Tests of Building Construction and Materials.

1.03 SUBMITTALS

A. See Section 013000 - Administrative Requirements, for submittal procedures.

B. Product Data: Indicate physical dimensions, features, wall mounting brackets with mounted measurements, anchorage details, and rough-in measurements.

PART 2 PRODUCTS

2.01 MANUFACTURERS

A. Wall and Corner Guards:
   1. Arden Architectural Specialties, Inc: www.ardenarch.com.
   2. Construction Specialties, Inc: www.c-sgroup.com/#sle.
   3. Inpro: www.inprocorp.com.
   4. Koroseal Wall Protection Systems, Inc. www.korogard.com
   5. J L Industries.www.activarcpg.com
   6. Pauling Corporation,: www.pawling.com

2.02 COMPONENTS

A. Corner Guards - Flush Mounted:
   1. Surface Burning Characteristics: Provide assemblies with flame spread index of 25 or less and smoke developed index of 450 or less, when tested in accordance with ASTM E84.
   2. Width of Wings: 2 inches.
   3. Corner: Square.
   4. Color: As scheduled, or custom colors.
   5. Length: One piece.

B. Corner Guards - Surface Mounted:
   1. Width of Wings: 2 inches.
   2. Corner: Radiused.
   3. Color: As scheduled from manufacturer's full color custom line.
   4. Projection From Wall to Outside of Guard: ____ inch.
   5. Length: One piece.

2.03 FABRICATION

A. Fabricate components with tight joints, corners and seams.

B. Pre-drill holes for attachment.

C. Form end trim closure by capping and finishing smooth.

PART 3 EXECUTION

3.01 EXAMINATION

A. Verify that rough openings, concealed blocking, and anchors are correctly sized and located.

B. Verify that field measurements are as indicated on Drawings.

3.02 INSTALLATION

A. Install components in accordance with manufacturer's instructions, level and plumb, secured rigidly in position to wall framing members only.

B. Position corner guard 12 inches above finished floor to 54 inches high.

C. Attachment or anchoring shall be mechanical. Adhesive only is not acceptable.

3.03 TOLERANCES

A. Maximum Variation From Required Height: 1/4 inch.

B. Maximum Variation From Level or Plane For Visible Length: 1/4 inch.

END OF SECTION

SECTION 102800
TOILET, BATH, AND LAUNDRY ACCESSORIES

PART 1 GENERAL

1.01 SECTION INCLUDES

A. Commercial toilet accessories.

B. Commercial shower and bath accessories.

C. Under-lavatory pipe supply covers.

D. Accessories for toilet rooms, showers, utility rooms, and sinks

E. Electric hand/hair dryers.

F. Diaper changing stations.

G. Utility room accessories.

1.02 RELATED REQUIREMENTS

A. Section 224000 - Plumbing Fixtures: Under-lavatory pipe and supply covers.

1.03 REFERENCE STANDARDS

A. ADA Standards - 2010 ADA Standards for Accessible Design.

B. ASTM A123/A123M - Standard Specification for Zinc (Hot-Dip Galvanized) Coatings on Iron and Steel Products.

C. ASTM A269/A269M - Standard Specification for Seamless and Welded Austenitic Stainless Steel Tubing for General Service.

D. ASTM A666/A666M - Standard Specification for Annealed or Cold-Worked Austenitic Stainless Steel Sheet, Strip, Plate, and Flat Bar.

E. ASTM C1036 - Standard Specification for Flat Glass.

F. ASTM C1503 - Standard Specification for Silvered Flat Glass Mirror.

G. ASTM F2285 - Standard Consumer Safety Performance Specification for Diaper Changing Tables for Commercial Use.

1.04 ADMINISTRATIVE REQUIREMENTS

A. Coordinate the work with the placement of internal wall reinforcement, concealed ceiling supports, and reinforcement of toilet partitions to receive anchor attachments.

1.05 SUBMITTALS

A. See Section 013000 - Administrative Requirements, for submittal procedures.

B. Product Data: Submit data on accessories describing size, finish, details of function, and attachment methods.

PART 2 PRODUCTS

2.01 MANUFACTURERS

A. Basis of Design: Products listed are based on preferred products made by Bobrick Washroom Accessories; www.bobrick.com, GOJO Industries; www.gojo.com, Georgia-Pacific Professional; www.blue-connect.com and Kimberly-Clark Corporation; www.kimberly-clark.com..

B. Other Acceptable Manufacturers:
   1. AJW Architectural Products: www.ajw.com.
   2. ASI - American Specialties, Inc: www.americanspecialties.com.
   3. Bradley Corporation: www.bradleycorp.com.
   4. GOJO Industries: www.gojo.com
   5. A.R. Nelson Co: www.arnelson.com
   6. Georgia-Pacific Professional: www.blue-connect.com.

7. Kimberly Clark Corporation: www.kimberly-clark.com.
8. Substitutions: Section 016000 - Product Requirements.

C. Electric Hand/Hair Dryers:
1. Excel Dryer; Xlerator Eco Hand Dryer: www.exceldryer.com.
2. Substitutions: Section 016000 - Product Requirements.

2.02 MATERIALS

A. Accessories - General: Shop assembled, free of dents and scratches and packaged complete with anchors and fittings, steel anchor plates, adapters, and anchor components for installation.
1. Grind welded joints smooth.

B. Keys: Provide 4 keys for each accessory to Owner; master key lockable accessories.

C. Stainless Steel Sheet: ASTM A666/A666M, Type 304.

D. Stainless Steel Tubing: ASTM A269/A269M, Grade TP304 or TP316.

E. Mirror Glass: Annealed float glass, ASTM C1036 Type I, Class 1, Quality Q2, with silvering, protective and physical characteristics complying with ASTM C1503.

F. Fasteners, Screws, and Bolts: Hot dip galvanized; tamper-proof; security type.

G. Expansion Shields: Fiber, lead, or rubber as recommended by accessory manufacturer for component and substrate.

2.03 FINISHES

A. Stainless Steel: Satin finish, unless otherwise noted.

B. Galvanizing for Items Other than Sheet: Comply with ASTM A123/A123M; galvanize ferrous metal and fastening devices.

C. Back paint components where contact is made with building finishes to prevent electrolysis.

2.04 COMMERCIAL TOILET ACCESSORIES

A. (TPD-1) Toilet Paper Dispenser: Double Jumbo roll, surface mounted bracket type, stainless steel, spindleless type for tension spring delivery designed to prevent theft of tissue roll.
1. Product: 9551 manufactured by Kimberly-Clark Corporation.
2. Mounting height: 29 inches from top of accessory to finished floor and 15" away from front face of toilet.

B. (PTD) Paper Towel Dispenser: 8" diameter roll paper type, translucent smoke-colored plastic, surface mounted, push paddle dispenser, piano hinges and tumbler lock.
1. Product: 54338 manufactured by Georgia Pacific Professional.
2. Mounting height: 52 inches from top of accessory to finished floor.

C. (WR) Waste Receptacle: Recessed, stainless steel, seamless lower door for acces to container, with tumbler lock, reinforced panel full height of door, push in self closing top door, continuously welded bottom pan and seamless exposed flantes.
1. Product B-3644 manufactured by Bobrick Washroom Accessories.
2. Liner: Removable seamless stainless steel heavy duty receptacle.
3. Minimum capacity: 12 gallons
4. Mounting height: 45 inches from top of accessory to finished floor.

D. (SD) Soap Dispenser: Foam soap dispenser.
1. Product: 5155-06 manufactured by GOJO Industries Inc.
2. Mounting height: As indicated on the drawings.

E. (MIR) Mirrors: Stainless steel framed, 6 mm thick float glass mirror.
1. Product: B-290 Series Mirror manufactured by Bobrick Washroom Accessories.
2. Size: 18w x 30 inches
3. Frame: 0.05 inch angle shapes, with mitered, welded, ground corners, and tamperproof hanging system: No 4 finish.

4. Mirror: Number 1 quality with plastic filler strips protecting mirror edges, back protected by 3/16" thick water resistant polyethylene padding.
5. Mounting Height: as indicated on the drawings.

F. (ADA-MIR) - ADA Mirrors: Stainless steel framed, 6 mm thick float glass mirror.
1. Product: B-293 Series Tilt Mirror manufactured by Bobrick Washroom Accessories.
2. Size: 18w x 30h inches.
3. Backing: Full mirror sized, minimum 0.03 inch galvanized steel sheet and nonabsorptive water resistand filler material.
4. Mirror: Number 1 quality with plastic filler strips protecting mirror edges, back protected by 3/16" thick water resistant polyethylene padding, extends from wall 4 inches at top of mirror tapering to 1 inch at bottom of mirror.
5. Mounting height: As indicated on drawings.

G. (GB-1, GB-2) Grab Bars: Stainless steel, 1-1/4 inch outside diameter, minimum 0.05 inch wall thickness, nonslip grasping surface finish, concealed flange mounting; 1-1/2 inch clearance between wall and inside of grab bar.
1. Product: B-6806 series manufactured by Bobrick Washroom Accessories.
2. Length and configuration: Configuration as inidicated on drawings.
a. GB-1 is 36 inches long.
b. GB-2 is 42 inches long.
3. Mounting height: 36 inches.

H. (SNR) Sanitation Napkin Receptacles:
1. Product: 21501506 manufactured by Continental Manufacturing (distributed by American Plastics, 11840 Westline Industrial Drive, St. Louis, MO 63146. Phone 800.325.1051).
2. Mounting height: 33 inches to top of unit.

I. Electric Hand Dryers: Traditional fan-in-case type, with downward nozzle.
1. Cover: Stainless steel with brushed finish.

2.05 SHOWER ACCESSORIES

A. Shower Curtain Rod: Stainless steel tube, 1 inch outside diameter, 0.04 inch wall thickness, satin-finished, with 3 inch outside diameter, minimum 0.04 inch thick satin-finished stainless steel flanges, for installation with exposed fasteners.

B. Shower Curtain:
1. Material: Nylon reinforced vinyl, 0.008 inch thick, matte finish, with antibacterial treatment, flameproof and stain-resistant.
2. Size: 36 by 72 inches, hemmed edges.
3. Grommets: Stainless steel; pierced through top hem on 6 inch centers.
4. Color: As selected from manufacturer's standard colors.
5. Shower Curtain Hooks: Chrome-plated or stainless steel spring wire designed for snap closure.

C. Folding Shower Seat: Wall-mounted surface; welded tubular seat frame, structural support members, swing-down legs, hinges, and mechanical fasteners of Type 304 stainless steel, L-shaped, right hand seat.
1. Seat: One-piece, pan-type, 0.05 inch stainless steel sheet, Type 304. Weld seams and grind smooth.
2. Size: ADA Standards compliant.

D. Robe Hook: Heavy-duty stainless steel, single-prong, rectangular-shaped bracket and backplate for concealed attachment, satin finish.

2.06 UNDER-LAVATORY PIPE AND SUPPLY COVERS

A. Specified in 224000 - Plumbing Fixtures.

2.07 ELECTRIC HAND/HAIR DRYERS

A. Electric Hand Dryers: Traditional fan-in-case type, with downward fixed nozzle.
   1. Operation: Automatic, sensor-operated on and off.
   2. Mounting: Wall-mounted - surface.
   3. Cover: Plastic.
      a. Color: White.
      b. Tamper-resistant screw attachment of cover to mounting plate.
   4. Air Velocity: 15,000 linear feet per minute, minimum.
   5. Fan Control: Field adjustable down to approximately half-speed.
   6. Total Wattage: 500 W, maximum; no heater.
   7. Runtime: Field adjustable or automatic, up to 35 seconds.
   8. Electric Hand Dryer Products:
      a. Excel Dryer Inc; XLERATOReco: www.exceldryer.com/#sle.
      b. Substitutions: Section 016000 - Product Requirements.

2.08 DIAPER CHANGING STATIONS

A. Diaper Changing Station: Wall-mounted folding diaper changing station for use in commercial toilet facilities, meeting or exceeding ASTM F2285.
   1. Material: Polyethylene.
   2. Mounting: Surface.

2.09 UTILITY ROOM ACCESSORIES

A. (MHS) Combination Utility Shelf/Mop and Broom Holder: 0.05 inch thick stainless steel, Type 304, with 1/2 inch returned edges, 0.06 inch steel wall brackets.
   1. Product: B-239-34 manufactured by Bobrick Washroom Accessories.
   2. Drying rod: Stainless steel, 1/4 inch diameter.
   3. Hooks: 4, 0.06 inch stainless steel rag hooks at shelf front.
   4. Mop/broom holders: Three spring-loaded rubber cam holders at shelf front.
   5. Length: 34 inches.

PART 3 EXECUTION

3.01 EXAMINATION

A. Verify existing conditions before starting work.

B. Verify exact location of accessories for installation.

C. Verify that field measurements are as indicated on drawings.

D. See Section 061000 for installation of blocking, reinforcing plates, and concealed anchors in walls and ceilings.

E. Verify existing blocking or anchoring is in place.

3.02 PREPARATION

A. Deliver inserts and rough-in frames to site for timely installation.

B. Provide templates and rough-in measurements as required.

3.03 INSTALLATION

A. Install accessories in accordance with manufacturers' instructions in locations indicated on drawings.

B. Install plumb and level, securely and rigidly anchored to substrate.

C. Accessories shall be installed using mechanical attachment. Adhesive alone is NOT acceptable.

D. If any locations are unclear, conflict, or need verification contact the Architect for instruction.

E. Mounting Heights: As required by accessibility regulations and as indicated on the drawings, unless otherwise indicated.

3.04 PROTECTION

A. Protect installed accessories from damage due to subsequent construction operations.

END OF SECTION

This page intentionally left blank

SECTION 104400
FIRE PROTECTION SPECIALTIES

PART 1 GENERAL

1.01 SECTION INCLUDES

A. Fire extinguishers.

B. Fire blankets.

C. Fire extinguisher cabinets.

D. Accessories.

1.02 RELATED REQUIREMENTS

A. Section 099123 - Interior Painting: Field paint finish.

1.03 REFERENCE STANDARDS

A. FM (AG) - FM Approval Guide.

B. NFPA 10 - Standard for Portable Fire Extinguishers.

C. UL (DIR) - Online Certifications Directory.

1.04 SUBMITTALS

A. See Section 013000 - Administrative Requirements, for submittal procedures.

B. Product Data: Provide extinguisher operational features.

C. Shop Drawings: Indicate cabinet physical dimensions, rough-in measurements for recessed cabinets, wall bracket mounted measurements, and location.

D. Manufacturer's Certificate: Certify that products meet or exceed specified requirements.

1.05 FIELD CONDITIONS

A. Do not install extinguishers when ambient temperature may cause freezing of extinguisher ingredients.

PART 2 PRODUCTS

2.01 MANUFACTURERS

A. Fire Extinguishers:
   1. Amerex Corporation: www.amerex-fire.com
   2. Ansul, a Tyco Business: www.ansul.com.
   3. Nystrom, Inc: www.nystrom.com/sle.
   4. JL Industries: www.jlindustries.com
   5. Larsen'sManufacturing Co: Larsenmfg.com
   6. Pyro-Chem, a Tyco Business: www.pyrochem.com/#sle.
   7. Substitutions: See Section 016000 - Product Requirements.

B. Fire Extinguisher Cabinets and Accessories:
   1. Larsen's Manufacturing Co: www.larsensmfg.com.
   2. Potter-Roemer: www.potterroemer.com.
   3. Substitutions: See Section 016000 - Product Requirements.

2.02 FIRE EXTINGUISHERS

A. Fire Extinguishers - General: Comply with product requirements of NFPA 10 and applicable codes, whichever is more stringent.
   1. Provide extinguishers labeled by UL (DIR) or FM (AG) for purpose specified and as indicated.

B. Multipurpose Dry Chemical Type Fire Extinguishers: Carbon steel tank, with pressure gauge.
   1. Cartridge Operated: Spun shell.
   2. Class: A:B:C type.

3. Size: 5 pound.
4. Finish: Baked polyester powder coat, Red color.
5. Temperature range: Minus 65 degrees F to 120 degrees F.

2.03 FIRE EXTINGUISHER CABINETS

A. Cabinet Construction: Non-fire rated.
   1. Formed primed steel sheet; 0.036 inch thick base metal.

B. Cabinet Configuration: Recessed type, unless otherwise noted on drawings.
   1. Size to accommodate accessories.
   2. Trimless type.
   3. Provide cabinet enclosure with right angle inside corners and seams, and with formed perimeter trim and door stiles.

C. Door: 0.036 inch metal thickness, reinforced for flatness and rigidity with nylon catch. Hinge doors for 180 degree opening with two butt hinges.

D. Door Glazing: Plastic, clear, 1/8 inch thick UV acrylic. Set in resilient channel gasket glazing.

E. Cabinet Mounting Hardware: Appropriate to cabinet, with pre-drilled holes for placement of anchors.

F. Fabrication: Weld, fill, and grind components smooth.

G. Finish of Cabinet Exterior Trim and Door: No.4 - Brushed stainless steel.

H. Finish of Cabinet Interior: White colored enamel.

2.04 ACCESSORIES

A. Fire Blanket: Fire retardant treated wool; red, 62 by 84 inch size.

B. Fire Blanket Cabinet:
   1. Metal: Cold-rolled steel with a standard finish of red baked acrylic enamel.
   2. Surface mount 68 inch H x 6.25 inch W x 4 inch D
   3. Cabinet Signage: "Fire Blanket" placed on front of door vertically in white letters.

C. Cabinet Signage: Test: "Fire Extinguisher". Placed on glazing, full height of glazing red lettering.

PART 3 EXECUTION

3.01 EXAMINATION

A. Verify existing conditions before starting work.

B. Verify rough openings for cabinet are correctly sized and located.

3.02 INSTALLATION

A. Install in accordance with manufacturer's instructions.

B. Install cabinets plumb and level in wall openings, at code required height in inches from finished floor to inside bottom of cabinet.

C. Secure rigidly in place.

D. Place extinguishers in cabinets.

E. Position cabinet signage at glazing full height of glazing red lettering.

END OF SECTION

SECTION 105113
METAL LOCKERS

PART 1 GENERAL

1.01 SECTION INCLUDES

A. Metal lockers.

B. Locker benches.

1.02 RELATED REQUIREMENTS

A. Section 061000 - Rough Carpentry: Wood blocking and nailers.

B. Section 062000 - Finish Carpentry: Bench tops for locker bench support brackets.

1.03 REFERENCE STANDARDS

A. ADA Standards - 2010 ADA Standards for Accessible Design.

B. ASTM A653/A653M - Standard Specification for Steel Sheet, Zinc-Coated (Galvanized) or Zinc-Iron Alloy-Coated (Galvannealed) by the Hot-Dip Process.

C. ASTM A879/A879M - Standard Specification for Steel Sheet, Zinc Coated by the Electrolytic Process for Applications Requiring Designation of the Coating Mass on Each Surface.

D. ASTM A1008/A1008M - Standard Specification for Steel, Sheet, Cold-Rolled, Carbon, Structural, High-Strength Low-Alloy, High-Strength Low-Alloy with Improved Formability, Required Hardness, Solution Hardened, and Bake Hardenable.

E. ICC A117.1 - Accessible and Usable Buildings and Facilities.

1.04 SUBMITTALS

A. See Section 013000 - Administrative Requirements for submittal procedures.

B. Product Data: Manufacturer's published data on locker construction, sizes, and accessories.

C. Shop Drawings: Indicate locker plan layout, numbering plan and combination lock code.

D. Samples: Submit two samples ___ by ___ inches in size showing color and finish of metal locker material.

1.05 DELIVERY, STORAGE, AND HANDLING

A. Protect locker finish and adjacent surfaces from damage.

PART 2 PRODUCTS

2.01 MANUFACTURERS

A. ASI Storage Solutions: www.asi-storage.com/#sle.

B. DeBourgh Manufacturing Co: www.debourgh.com/#sle.

C. Substitutions: See Section 016000 - Product Requirements.

2.02 APPLICATIONS

A. Athletic Lockers: Metal lockers, free-standing with matching closed base.
   1. Width: Varies, see drawings & locker schedule.
   2. Depth: Varies, see drawings & locker schedule.
   3. Height: 72 inches.
   4. Configuration: Varies, see drawings & locker schedule.
   5. Fittings: Size and configuration as indicated on drawings.
      a. Hooks: Two single prong.
   6. Ventilation: Perforated side panels and doors.
   7. Locking: Padlock hasps, for padlocks provided by Owner.
   8. Provide sloped top.
   9. Color: To be selected from manufacturer's full range by Architect.

2.03 METAL LOCKERS

A. Accessibility: Design units indicated on drawings as 'accessible' to comply with ICC A117.1 and ADA Standards.

B. Locker Case Construction:
   1. Standard-Duty, Knocked Down Construction: Made of formed sheet steel; metal edges finished smooth without burrs; baked enamel or powder coat finished inside and out.
      a. Locker Body Components: Formed and flanged from steel sheet of the following type and minimum thicknesses:
         1) Perforated Steel Sheet: Commercial Steel (CS), Type B, supplied for exposed applications and complying with ASTM A1008/A1008M and the following:
            (a) Perforations: Manufacturer's standard pattern of square holes.

C. Latches and Door Handles: Manufacturer's standard.

D. Sloped Top: 20 gauge, 0.0359 inch, with closed ends.

E. Coat Hooks: Stainless steel or zinc-plated steel.

F. Locks: Locker manufacturer's standard type indicated in Applications article above.

2.04 LOCKER BENCHES

A. Locker Benches: Stationary type; bench top of laminated birch; painted steel pedestals.
   1. Accessibility: Comply with ICC A117.1 and ADA Standards.

PART 3 EXECUTION

3.01 EXAMINATION

A. Verify that prepared bases are in correct position and configuration.

B. Verify bases and embedded anchors are properly sized.

3.02 INSTALLATION

A. Install in accordance with manufacturer's instructions.

B. Place and secure on prepared base.

C. Install lockers plumb and square.

D. Install fittings if not factory installed.

E. Replace components that do not operate smoothly.

3.03 CLEANING

A. Clean locker interiors and exterior surfaces.

END OF SECTION

SECTION 105613
METAL STORAGE SHELVING

PART 1 GENERAL

1.01 SECTION INCLUDES

A. Metal storage shelving.

1.02 SUBMITTALS

A. See Section 013000 - Administrative Requirements, for submittal procedures.

B. Shop Drawings: Indicate location, type, and layout of shelving, including lengths, heights, and aisle layout, and relationship to adjacent construction.

C. Warranty: Submit manufacturer warranty and ensure that forms have been completed in Owner's name and registered with manufacturer.

1.03 QUALITY ASSURANCE

A. Manufacturer Qualifications: Company specializing in manufacturing products specified in this section, with not less than Three years of documented experience.

B. Installer Qualifications: Company specializing in performing the work of this section with minimum three years of documented experience and approved by manufacturer.

1.04 DELIVERY, STORAGE, AND HANDLING

A. Inspect for dents, scratches, or other damage. Replace damaged units.

B. Store in manufacturer's unopened packaging until ready for installation.

C. Store under cover and elevated above grade.

1.05 WARRANTY

A. See Section 017800 - Closeout Submittals, for additional warranty requirements.

B. Provide five year manufacturer warranty covering defects of manufacturing and workmanship and rust and corrosion.

PART 2 PRODUCTS

2.01 MANUFACTURERS

2.02 SHELVING - GENERAL

A. See drawings for layout and sizes.
   1. Clear Aisle Widths: 42 clear inches, minimum.

PART 3 EXECUTION

3.01 EXAMINATION

A. Verify that substrate is level and that clearances are as specified.

B. Do not begin installation until substrates have been properly prepared.

C. If substrate preparation is the responsibility of another installer, notify Architect of unsatisfactory preparation before proceeding.

3.02 PREPARATION

A. Clean surfaces thoroughly prior to installation.

B. Prepare surfaces using the methods recommended by the manufacturer for achieving the best result for the substrate under the project conditions.

3.03 INSTALLATION

A. Install in accordance with manufacturer's instructions.

B. Install shelving with shelf surfaces level and vertical supports plumb; adjust feet and bases as required.

3.04 CLEANING

A. Clean shelving and surrounding area after installation.

3.05 PROTECTION

A. Protect installed products until completion of project.

B. Touch-up, repair or replace damaged products before Date of Substantial Completion.

END OF SECTION

SECTION 105617
WALL MOUNTED STANDARDS AND SHELVING

PART 1 GENERAL

1.01 SECTION INCLUDES

A. Steel shelf standards, brackets, and accessories.

B. See drawings for locations and configurations.

1.02 SUBMITTALS

A. See Section 013000 - Administrative Requirements for submittal procedures.

B. Product Data: Manufacturer's data sheets on each product to be used.

1.03 QUALITY ASSURANCE

A. Manufacturer Qualifications: Company specializing in manufacturing products specified in this section, with not less than five years of documented experience.

1.04 DELIVERY, STORAGE, AND HANDLING

A. Store products under cover and elevated above grade.

B. Store products in manufacturer's unopened packaging until ready for installation.

PART 2 PRODUCTS

2.01 MANUFACTURERS

A. Steel Shelf Standards and Brackets:
   1. Knape & Vogt Manufacturing Company; 87™/187™ Series: www.knapeandvogt.com/#sle.
   2. Substitutions: See Section 016000 - Product Requirements.

2.02 COMPONENTS

A. Fasteners: Screws as recommended by manufacturer for intended application or as otherwise required by project conditions. Finish of exposed to view fasteners to match finish of standards and other components.

2.03 MATERIALS

A. Super-Duty Shelf Standards and Brackets: Single-slotted channel standards for brackets adjustable in 1 inch increments along entire length of standard, drilled and countersunk for screws.
   1. Load Capacity: Recommended by manufacturer for loading of 540 to 1,060 pounds per pair of standards.
   2. Face Width: 5/8 inch, single slotted.
   3. Material: 12 gage, 0.1046 inch sheet steel.
   4. Lengths: As indicated on drawings.
   5. Finish: Electroplated, chrome-look.
   6. Brackets: 12 gage, 0.1046 inch sheet steel, reinforced, locking into slots with molded nylon cam lock lever; size to suit shelves; same finish as standards.
   7. Bracket Quantity: Provide one bracket for each 12 inches of standard length.

B. Fasteners: Screws as recommended by manufacturer for intended application or as otherwise required by project conditions.

PART 3 EXECUTION

3.01 EXAMINATION

A. Do not begin installation until substrates have been properly prepared.

B. If substrate preparation is the responsibility of another installer, notify Architect of unsatisfactory preparation before proceeding.

3.02 PREPARATION

A. Clean surfaces thoroughly prior to installation.

B. Prepare surfaces using the methods recommended by the manufacturer for achieving the best result for the substrate under the project conditions.

3.03 INSTALLATION

A. Install in accordance with manufacturer's instructions.

B. Mount standards or brackets to solid backing capable of supporting intended loads.

C. Install brackets, shelving, and accessories.

3.04 PROTECTION

A. Protect installed products until completion of project.

B. Touch-up, repair or replace damaged products before Substantial Completion.

END OF SECTION

SECTION 115214
INSTRUCTIONAL TECHNOLOGY EQUIPMENT

PART 1 GENERAL

1.01 SECTION INCLUDES

A. Interactive LED displays.

B. Projectors and projector mounts.

C. Cabling and accessories.

1.02 RELATED REQUIREMENTS

A. Section 260529 - Hangers and Supports for Electrical Systems: Cabling supports.

B. Section 260533.23 - Surface Raceways for Electrical Systems: Surface mounted raceways to conceal cabling.

C. Section 260533.16 - Boxes for Electrical Systems: Boxes for faceplate cabling terminations.

1.03 ADMINISTRATIVE REQUIREMENTS

A. Preinstallation Meeting: Conduct a preinstallation meeting at least one week prior to the start of the work of this section ; require attendance by all affected installers.

1.04 SUBMITTALS

A. See Section 013000 - Administrative Requirements for submittal procedures.

B. Product Data: Product specification sheets for interactive whiteboards, interactive LED displays, projectors, projector mounts, cabling, and wall plates.

C. Operation Data: Provide for interactive whiteboards, interactive LED displays, and projectors.

D. Maintenance Data: Provide for interactive whiteboards, interactive LED displays, and projectors.

E. Warranty: Submit manufacturer warranty and ensure that forms have been completed in Owner's name and registered with manufacturer.

1.05 QUALITY ASSURANCE

A. Supplier Qualifications: Manufacturer authorized educational reseller of equipment in this section.
   1. Interactive whiteboards and interactive LED displays must be purchased through a SMART Educational Product reseller.
   2. Projectors must be purchased through an Epson Brighter Future dealer.

B. Installer Qualifications: Company specializing in performing the work of this section and approved by manufacturer.
   1. Installer must have a St. Louis County licensed low voltage electrician (licensed electrician is also acceptable) on staff to obtain permits and oversee installation of all vertical ceiling mount cabling installations.

1.06 DELIVERY, STORAGE, AND HANDLING

A. Deliver all equipment and accessories to project site in original packaging .

B. Store equipment and accessories in dry protected area in orginal packaging until installation.

1.07 WARRANTY

A. See Section 017800 - Closeout Submittals for additional warranty requirements.

B. Provide two year manufacturer warranty for interactive whiteboards and interactive LED displays.

C. Provide two year manufacturer warranty for interactive pen displays.

D. Provide three year manufacturer warranty for projectors.

PART 2 PRODUCTS

2.01 EQUIPMENT

A. Manufacturers:
   1. Epson America, Inc.: www.epson.com
   2. Quiktron, Inc.: www.quiktron.com
   3. Substitutions: Not permitted.

B. Interactive LED Displays:

C. Projectors:
   1. Projector And Boom Arm For Horizontal Boom Wall Mount: Epson; Model PowerLite 520 with horizontal boom wall mount.
      a. Short Throw Boom Arm: Epson; Model V12H706020 for PowerLite 520.

D. Speakers:
   1. Model SMART Technologies SBA-100 Audio System.
      a. Include both Model 51-00770-20 and 51-00771-21 mounting brackets for mounting speakers to SMART Boards.
      b. Include all necessary power, audio, and control cabling for a complete working interactive whiteboard sound system.

2.02 ACCESSORIES

A. Fasteners: As required by manufacturer and appropriate for substrate or equipment mount.

B. Horizontal Boom Wall Mount Accessories:
   1. Flying Lead: Quiktron; Model 2212-60018-002. Rapid Run flying lead HD15+3.5mm+Composite Video+Stereo Audio.
   2. Plenum Rated Multi-Format Runner Cable: Quiktron; Model 600 series, number dependent upon cable length required for installation. Rapid Run plenum rated pc runner cable.
   3. Integrated Wall Plate: Quiktron; Model 2212-60032-001. Rapid Run single gang integrated HD15+3.5mm+RCA Audio/Video wall plate.

PART 3 EXECUTION

3.01 EXAMINATION

A. Verification of Conditions: Verify that substrate is sound and can support the interactive whiteboard and interactive LED display prior to installation. .

B. Report any concerns about substrate to Owner prior to installation.

3.02 INSTALLATION

A. Install interactive whiteboards, interactive LED displays, and projectors in accordance with manufacturer's instructions.
   1. Install in horizontal as indicated on the drawings.
   2. Install in vertical locations as follows unless indicated otherwise on the drawings:
      a. High Schools and Support Buildings: 85 inches to top of Smartboard.
      b. Elementary Schools 3rd Grade Through 5th Grade and Middle Schools: 80 inches to top of Smartboard.
      c. Pre-School and Elementary Schools Kindergarten Through 2nd Grade: 75 inches to top of Smartboard.

B. Install projector mount in accordance with manufacturer's instructions.
   1. Install horizontal boom wall mount after intereactive whiteboard is installed to insure proper alignment of projector with interactive whiteboard.

C. Install projector in projector mount in accordance with manufacturer's instructions.

D. Horizontal Boom Wall Mount Systems Integration:

1. Connect projector to integrated wall plate with flying lead connected to plenum rated pc runner cabling.
2. Install plenum rated pc runner cabling in surface mounted raceway where exposed to view on wall.
3. Connect projector power cord to wall mounted power receptacle as indicated in drawings.

E. Install interactive whiteboard sound system in accordance with manufacturer's instructions.

3.03 SYSTEM STARTUP

A. Prepare and start equipment and systems in accordance with manufacturers' instructions and recommendations.

B. Adjust for proper operation within manufacturer's published tolerances.

3.04 ADJUSTING

A. Adjust projector to insure projected image is in focus on interactive whiteboard.

3.05 CLEANING

A. Clean interactive whiteboard, interactive LED display, and projector lense with manufacturer recommended cleaning supplies.

3.06 PROTECTION

A. Protect installed interactive whiteboards, interactive LED displays, and projectors from subsequent construction operations.

END OF SECTION

This page intentionally left blank

SECTION 116623
GYMNASIUM EQUIPMENT

PART 1 GENERAL

1.01 SECTION INCLUDES

A. Floor anchors for tensioned elements.

B. Floor sleeves for net and goal posts.

C. Wall mounted protection pads.

1.02 RELATED REQUIREMENTS

1.03 ADMINISTRATIVE REQUIREMENTS

A. Large Components: Ensure that large components can be moved into final position without damage to other construction.

1.04 SUBMITTALS

A. See Section 013000 - Administrative Requirements, for submittal procedures.

B. Product Data: Provide manufacturer's data showing configuration, sizes, materials, finishes, hardware, and accessories; include:
   1. Manufacturer's installation instructions.

C. Warranty: Submit manufacturer warranty and ensure that forms have been completed in Owner's name and registered with manufacturer.

1.05 QUALITY ASSURANCE

A. Manufacturer Qualifications: Company specializing in manufacturing products specified in this section, with not less than three years of documented experience.

B. Installer Qualifications: Company specializing in performing work of the type specified with minimum five years of experience.

1.06 DELIVERY, STORAGE, AND HANDLING

A. Deliver products to project site in manufacturer's original packaging with factory original labels attached.

B. Store products indoors and elevated above floor; prevent warping, twisting, or sagging.

C. Store products in accordance with manufacturer's instructions; protect from extremes of weather, temperature, moisture, and other damage.

1.07 WARRANTY

A. See Section 017800 - Closeout Submittals, for additional warranty requirements.

PART 2 PRODUCTS

2.01 MANUFACTURERS

A. Gymnasium Equipment:
   1. Draper, Inc: www.draperinc.com/sle.
   2. Performance Sports Systems: www.perfsports.com.
   3. Porter Athletic Equipment Company: www.porterathletic.com.
   4. _____.
   5. Substitutions: See Section 016000 - Product Requirements.

2.02 GENERAL REQUIREMENTS

A. See drawings for sizes and locations, unless noted otherwise.

B. Provide mounting plates, brackets, and anchors of sufficient size and strength to securely attach equipment to building structure; comply with requirements of Contract Documents.

C. Hardware: Heavy duty steel hardware, as recommended by manufacturer.

2.03 FLOOR-MOUNTED EQUIPMENT

A. Floor Sleeves for Posts: Metal sleeve, with latch cover, cast into concrete subfloor to hold poles for nets and goals; installed flush with finish floor surface.
   1. Latch Cover: Brass, round; tamper proof with cylinder lock and key.
   2. Sleeve: Aluminum. coordinate size with existing equipment
   3. Depth of Sleeve: 9 inches from floor surface to bottom, including latch cover.

2.04 WALL PADDING

A. Wall Padding: Foam filling bonded to backing board, wrapped in covering; each panel fabricated in one piece.
   1. Covering: Vinyl-coated polyester fabric, mildew and rot resistant; stapled to back of board.
      a. Color: As selected from manufacturer's standard range.
      b. Texture: Embossed leather-look.
      c. Fabric Weight: 14 oz/sq yd, minimum.
   2. Foam: Soft, urethane or polyurethane, with 3.5 pcf nominal density.
   3. Foam Thickness: 2 inches.
   4. Backing Board: Plywood.
      a. Thickness: 3/8 inch, minimum.
   5. Panel Dimensions: __ inches wide by __ inches long, including nailing/fastening margins.
   6. Fastening Margins: 1 inch wide, covered by fabric covering.

PART 3 EXECUTION

3.01 EXAMINATION

A. Take field measurements to ensure proper fitting of work. If taking field measurements before fabrication will delay work, allow for adjustments within recommended tolerances.

B. Inspect areas and conditions before installation, and notify Architect in writing of unsatisfactory or detrimental conditions.

C. Do not proceed with this work until conditions have been corrected; commencing installation constitutes acceptance of work site conditions.

3.02 INSTALLATION

A. Install in accordance with Contract Documents and manufacturer's instructions.

B. Coordinate installation of inserts and anchors that must be built in to flooring or subflooring.

C. Install equipment rigid, straight, plumb, and level.

D. Secure equipment with manufacturer's recommended anchoring devices.

E. Install wall padding securely, with edges tight to wall and without wrinkles in fabric covering.

F. Separate dissimilar metals to prevent electrolytic corrosion.

3.03 CLEANING

A. Remove masking or protective covering from finished surfaces.

B. Clean equipment in accordance with manufacturer's recommendations.

END OF SECTION

SECTION 126100
FIXED AUDIENCE SEATING

PART 1 GENERAL

1.01 SECTION INCLUDES

A. Fixed, non-upholstered audience seating.

B. Seating accessories.

1.02 RELATED REQUIREMENTS

1.03 REFERENCE STANDARDS

A. ADA Standards - 2010 ADA Standards for Accessible Design.

1.04 SUBMITTALS

A. See Section 013000 - Administrative Requirements, for submittal procedures.

B. Shop Drawings: Fabrication and installation details, chair layouts and dimensions and seat numbering scheme.
   1. Field Measurements: Verify seating layout by field measurements and record field dimensions on shop drawings.

C. Selection Samples: Manufacturer's color charts and swatches for fabric upholstery, indicating full range of materials, colors, and patterns available.

D. Installer's qualification statement.

1.05 QUALITY ASSURANCE

A. Installer Qualifications: An experienced installer certified in writing by the seating manufacturer to be qualified for installation of specified seating.

1.06 DELIVERY, STORAGE, AND HANDLING

A. Deliver seats to project site in unopened containers clearly labeled with manufacturer's name and identification of contents.

B. Store seating units in dry and clean location until needed for installation. During installation, handle in a manner that will prevent marring and soiling of finished surfaces.

1.07 WARRANTY

A. See Section 017800 - Closeout Submittals for additional warranty requirements.

B. Extended Correction Period: Correct defective work within a 5-year period after Date of Substantial Completion. Replace parts that fail under normal use at no extra charge to Owner.

PART 2 PRODUCTS

2.01 MANUFACTURERS

A. Fixed Audience Seating:
   1. Hussey Seating Company: www.husseyseating.com.
   2. Irwin Seating Company; _____: www.irwinseating.com/#sle.

B. Substitutions: See Section 016000 - Product Requirements.

C. Provide all fixed audience seating by one manufacturer.

2.02 NON-UPHOLSTERED SEATING

A. Fixed seating system designed to permit radial installation using common middle support standards in each row and aisle standards aligned as indicated on drawings. Width of seats not less than 21 inches, except exit seat locations may be reduced to 20 inches to complete specific row dimensions.

B. Performance Criteria:

C. One-Piece Chairs: Contoured, shell-type construction with rolled edges, fabricated from molded fiberglass or injection-molded high-impact polypropylene.
   1. Provide embedded provisions for fastening to welded bracket for connection to steel support standards.

2.03 ACCESSORIES

A. Seat and Aisle Numbers: Manufacturer's standard seat numbers securely fastened to front edge of folding seats and row numbers securely fastened to end panels; anodized aluminum finish, with letters and numbers countersunk and filled with black paint; recessed mounting.

PART 3 EXECUTION

3.01 EXAMINATION

A. Examine substrates for conditions detrimental to installation of fixed audience seating. Proceed with installation only after unsatisfactory conditions have been corrected.

3.02 INSTALLATION

A. Comply with manufacturer's installation instructions and approved shop drawings.

B. Anchor support standards securely to substrate with at least two anchoring devices recommended by manufacturer.
   1. Place standards in each row laterally so the standards at the aisle will be in alignment.
   2. Vary width of seats and backs as required to optimize sightlines, and comply with the ADA Standards for row and aisle widths.
   3. Attach components to standards with sufficient flexibility to compensate for convergence of seats toward the center.

3.03 ADJUSTING

A. Replace upholstery fabric damaged or soiled during installation.

END OF SECTION

SECTION 126613
TELESCOPING BLEACHERS

PART 1 GENERAL

1.01 SECTION INCLUDES

A. Telescoping bleachers.

B. Electric motor operators, controls, and internal wiring.

1.02 RELATED REQUIREMENTS

A. Section 260583 - Wiring Connections: Connection of electric motors.

1.03 REFERENCE STANDARDS

A. NFPA 102 - Standard for Grandstands, Folding and Telescopic Seating, Tents, and Membrane Structures.

B. PS 1 - Structural Plywood.

1.04 SUBMITTALS

A. See Section 013000 - Administrative Requirements, for submittal procedures.

B. Product Data: Manufacturer's data sheets on each product to be used, including:
   1. Preparation instructions and recommendations.
   2. Storage handling and requirements.
   3. Installation methods.

C. Shop Drawings: Complete layout with dimensions, seat heights, row spacing and rise, aisle widths and locations, points of connection to substrate, assembly dimensions, and material types and finishes.
   1. Provide drawings customized to this project.
   2. Include Professional Engineer certification.
   3. Wiring Diagrams: Show locations of motors, electrical wiring, and rough-in connections.
   4. Graphics Layout Drawings: Indicate pattern of customized seat colors.

D. Selection Samples: For each material for which color selection is required, submit samples, 2 by 2 inches in size, illustrating colors and finishes available from full custom colors.

E. Operation and Maintenance Data: Manufacturer's operation and maintenance instructions, including annual inspection and maintenance and bi-annual inspection by a Professional Engineer or manufacturer factory service personnel.

F. Submit sample floor roller to be used on the project and verify it will not mark the wood floor.

1.05 QUALITY ASSURANCE

A. Manufacturer Qualifications: Company specializing in manufacturing products specified in this section, with not less than three years of documented experience.

B. Installer Qualifications: Manufacturer's installation crew.

1.06 DELIVERY, STORAGE, AND HANDLING

A. Store, in original packaging, under cover and elevated above grade.

1.07 WARRANTY

A. See Section 017800 - Closeout Submittals, for additional warranty requirements.

B. Correct defective Work (labor and materials), within a five year period after Date of Substantial Completion. Replace parts that fail under normal use at no extra charge to Owner.

C. Warranty: Includes manufacturer labor, assembly, and material warranty and ensure that forms have been completed in Owner's name and registered with manufacturer.

PART 2 PRODUCTS

2.01 MANUFACTURERS

A. Telescoping Bleachers:
   1. Interkal LLC: www.interkal.com.
   2. Irwin Telescopic Seating Company: www.irwintelescopicseating.com.
   3. Hussey Seating Company: www.husseyseating.com.
   4. Substitutions: See Section 016000 - Product Requirements.

2.02 TELESCOPING BLEACHERS

A. Telescoping Bleachers: Factory assembled tiered benches that retract horizontally into depth approximately the same as a single row depth, with fixed seats mounted on leading edge of platforms.
   1. Provide a design certified by a licensed Professional Engineer licensed in the State in which the Project is located.
   2. Provide a design that has been in use for at least 5 years; submit documentation.
   3. Design to comply with applicable requirements of NFPA 102 and requirements of code authorities having jurisdiction; where conflicts between requirements occur, comply with whichever is more stringent.
   4. Design with solid fascia (riser) or seat fronts that conceal interior mechanisms when fully retracted, fitting tightly enough to prevent climbing up face; at front row provide key locked, hinged fascia (skirt) to cover gap between seat riser/fascia and floor.
   5. Configurations: As indicated on drawings.
   6. Wheelchair Spaces: Allow portions of first row, as indicated, to be manually retracted without affecting other rows; provide removable railings at row two behind wheelchair spaces. Rows shall be also be adjustable to be useable for normal seating
   7. Cutouts: Fit units to irregular wall surfaces, columns, pilasters, roof drain leaders, and other obstructions; take field measurements prior to fabrication.
   8. Operation: Motor operated.
   9. Risers and treads shall be solid panels with not joints, so that high heals can't penetrate.

B. Design Loads: Design to withstand the following loading conditions:
   1. Live Load on Structural Supports: 100 psf, minimum, of gross horizontal projection.
   2. Live Load on Seats and Walking Surfaces: 120 pounds per linear foot.
   3. Lateral Sway Stress on Structural Supports: 24 pounds per linear foot of seat plank.
   4. Perpendicular Sway Stress on Structural Supports: 10 pounds per linear foot of seat plank.

C. Dimensions:
   1. See drawings for overall dimensions, verify in field.
   2. Rows: 10.
   3. Rise Per Row: 10 inches.
   4. Row Depth: 24 inches.
   5. Seat Height Above Tread: 6 inches.
   6. Closed Depth: Not more than 44 inches more than single row depth.
   7. Width: 78.5 feet.

D. Structural Supports: Steel or aluminum; manufacturer's standard wheeled carriages supporting each tier separately, with moving parts permanently lubricated and metal parts cushioned to prevent metal-to-metal contact during operation.
   1. Design so that each row carriage so that it will individually support the design loads and is self supporting when fully assembled without dependence on platform panels or boards, seats, or fascia.
   2. Welding: In accordance with AWS D1.1/D1.1M and AWS D1.3/D1.3M.
   3. Bolting: Use lock-washers or locknuts.

4. Wheels: Minimum 5 inch diameter by 1-1/8 inch wide, with non-marring rubber tires; ball, roller, or oil-impregnated metal bearings; minimum of 2 wheels at each floor support.
5. Finish: Manufacturer's standard enamel or powder coating.
6. Row Locking: Automatically mechanically lock each carriage to adjacent carriages when fully extended.
7. Unlocking: Automatically unlock all rows before engaging retraction mechanism.

E. Motor Operation: Traction wheels with non-marring rubber covering, using motor adequately sized for the purpose.
1. Provide UL listed electrical components and wiring.
2. Controls: Start, Stop, Forward, and Reverse in a single control unit.
3. Control Station: Removable plug-in low-voltage pendant station, with first-row plug-in location for each motor.
4. Limit Switches: Automatically stop operation when unit has reached fully open or fully closed position.
5. Provide all wiring internal to bleacher units, to junction box located where indicated; ensure that wiring is not energized except during operation.
6. Electrical Characteristics: 120V, single phase, 60 Hz.
7. Provide access to motor from front side of bleachers; a hinged front skirt or hinged section at least 30 inches wide is acceptable.

2.03 SEAT AND PLATFORM COMPONENTS

A. Seat/Fascia Assembly: Continuous, molded UV-stabilized high-density polyethylene plastic, seat minimum 1 inch thick, textured finish, homogeneous color throughout, match existing bleachers in large gym, color selected from manufacturer's full line including custom colors; approximately 18 inch long sections independently removable with tongue-and-groove or rabbeted interlock at end joints.
1. Shape: Ergonomically contoured, with internal ribs spaced for natural flexibility; rear edge cantilevered to provide toe room of not less than 3 inches; no openings to trap debris.
2. Provide end caps of same material and finish on each exposed end.
3. Supports: Internal steel reinforcement of each seat segment bolted to platform nose member; minimum two bolts per segment.
4. Patterns. Individual seat color(s) pattern related to school colors, mascots, etc. shall be as shown on drawings.

B. Platform, Tread, and Step Structure: Plywood continuously supported on front and rear with side joints tongue-and-grooved.
1. Plywood: PS 1, 5-ply southern pine or polyethylene-overlaid douglas fir or southern pine, Grade A-C.
2. Plywood Thickness: 5/8 inch, minimum.
3. Front (Nose), Rear, and Intermediate Supports: Steel channel or tube, hot-dipped galvanized.
4. Provide end caps of same material and finish on each exposed end.
5. Finish: High gloss clear urethane, both sides, unless polyethylene finished.
6. Bleacher risers shall have both tread and riser enclosed to resist a 2 " diameter ball from going through.
7. Nosings: Extruded aluminum; clear anodized finish.
8. At aisles provide permanently attached intermediate steps of same construction and finish.
9. At bottom of aisles provide step in front of first riser, hinged to first platform to fold for storage.

2.04 HANDRAILS AND RAILINGS

A. Handrails and railings shall comply with local code. Provide the following railings:
1. Aisle Handrails: Single post folding railing segment mounted in center of aisle at every other row beginning at row 2.

2. End of Row Guardrails: Self-storing, at open ends of sections beginning at row 2.
3. Height: 42 inches above adjacent platform or tread.
4. Removable Railings: Provide steel post sockets attached to platform supports.

B. Design handrails and railings to withstand the following loads:
1. Concentrated Load on Handrails: 200 pounds in any direction.
2. Concentrated Load on Guardrails: 200 pounds in any direction along top rail.
3. Live Load on Handrails: 50 pounds per linear foot, applied in any direction.
4. Live Load on Guardrails:
a. Horizontal: 50 pounds per linear foot, applied at the guardrail height.
b. Vertical: 100 pounds per linear foot, applied vertically to top of guardrail.

C. Railing Construction: Round steel or aluminum pipe or tube, with formed elbows at corners and caps at ends of straight runs.
1. Aluminum: 1.66 inches minimum outside diameter; natural anodized finish.
2. Steel: 1-1/2 inch minimum outside diameter, with 11 gauge, 0.12 inch minimum wall thickness; textured powder coat epoxy finish.

2.05 ACCESSORIES

A. Fillers and Closures:
1. Ends of Retracted Units: Plywood panels, finished to match platforms.
2. Back of Units: Full width plywood panels, finished to match platforms, up to 8 feet above floor; vinyl curtains above to underside of top platform.
3. Sides of Extended Units: Vinyl curtains.
4. Vinyl Curtains: 18 ounce vinyl with grommets; color as selected from manufacturer's standard palette or custom palette of standard colors do not include school colors.

B. Motion Monitor: Strobe light and warning horn rated at 150 dB, both of which operate continuously during movement of any section of bleachers; mount strobe light where it is clearly visible to entire bleacher installation.

C. Fasteners: Provide hardware and fasteners in accordance with manufacturer's recommendations.

D. Anchorage: As indicated on drawings; provide hardware in accordance with manufacturer's recommendations.

PART 3 EXECUTION

3.01 EXAMINATION

A. Verify that field measurements are consistent with those on the shop drawings.

B. Verify that electrical rough-ins have been installed and are accessible.

C. Do not begin installation until substrates have been properly prepared and area has been cleared of obstructions.

D. If substrate preparation is the responsibility of another installer, notify Architect of unsatisfactory preparation before proceeding.

3.02 PREPARATION

A. Clean surfaces thoroughly prior to installation.

B. Prepare surfaces using the methods recommended by the manufacturer for achieving the best result for the substrate under the project conditions.

3.03 INSTALLATION

A. Install in accordance with manufacturer's instructions.

B. Do not field cut or alter seats, fascia, or structural members without approval.

C. Provide manufacturer's field representative to inspect completed installation.

3.04 ADJUSTING

A. Lubricate, test, and adjust each moving assembly to ensure proper operation in compliance with manufacturer's recommendations.

3.05 CLEANING

A. Clean exposed and semi-exposed assembly surfaces.

B. Touch up finishes on damaged or soiled areas.

3.06 CLOSEOUT ACTIVITIES

A. Demonstration and Training: Provide manufacturer's field representative to demonstrate to and train Owner's operating personnel in proper operation of equipment.
   1. Location: On site using installed equipment.
   2. Time: As agreed between Owner and Contractor.

3.07 PROTECTION

A. Protect installed products until completion of project.

B. Touch-up, repair, or replace damaged products before Date of Substantial Completion.

END OF SECTION

This page intentionally left blank

SECTION 142400
HYDRAULIC ELEVATORS

PART 1 GENERAL

1.01 SECTION INCLUDES

A. Complete hydraulic elevator systems.
   1. Passenger type.
   2. Service type.
   3. Freight type.

B. Elevator Maintenance Contract.

1.02 GENERAL REQUIREMENTS

A. 4 Stop Service Elevator:
   1. - New nonproprietary controller – Motion Control Engineering or approved equal.
   2. - New hydraulic power unit – MEI or approved equal.
   3. - New cab and hall fixtures – Innovation Industries or approved equal.
   4. - New car and hall doors – Columbia or approved equal.
   5. - New door operating equipment – GAL Manufacturing or approved equal.
   6. - New roller guides – ELSCO or approved equal.
   7. - New hoistway wire and traveling cable.
   8. - Wrap return, strike and header in stainless steel finish.
   9. - New cab interior with stainless steel kick plates – SnapCab or approved equal.
   10. - New cartop handrails.
   11. - Sand and re stain the existing finish floor.
   12. - New LED pit lighting.
   13. - New 110v disconnect for cab lighting.
   14. - Move pit light switch to proper location.
   15. - Make existing fire system programming changes.

B. 2 Stop Passenger Elevator:
   1. - New nonproprietary controller – Motion Control Engineering or approved equal.
   2. - New hydraulic power unit – MEI or approved equal.
   3. - New cab and hall fixtures – Innovation Industries or approved equal.
   4. - New car door – Columbia or approved equal.
   5. - Retain existing hall doors.
   6. - New door operator – GAL Manufacturing or approved equal.
   7. - New GAL retrofit kit allowing retention of hall doors and other equipment.
   8. - New roller guides – ELSCO or approved equal.
   9. - New hoistway wire and traveling cable.
   10. - New hydraulic packing seal.
   11. - Wrap return, strike and header in stainless steel finish.
   12. - New cab interior with stainless steel kick plates – SnapCab or approved equal.
   13. - New LED pit lighting.
   14. - New 110v disconnect for cab lighting.
   15. - Make existing fire system programming changes.
   16. - Piping and electrical box in machine room may need to be relocated (By Others)

1.03 RELATED REQUIREMENTS

A. Section 033000 - Cast-in-Place Concrete: Includes elevator pit and grouting thresholds.

B. Section 055000 - Metal Fabrications: Includes elevator pit ladder, sill supports, divider beams, and overhead hoist beams.

C. Section 096500 - Resilient Flooring: Floor finish in car.

D. Section 096813 - Tile Carpeting: Floor finish in car.

E. Section 211300 - Fire-Suppression Sprinkler Systems: Sprinkler heads in hoistway.

F. Section 260533.13 - Conduit for Electrical Systems:
   1. Conduit to elevator equipment devices remote from elevator machine room or hoistway.

G. Section 260583 - Wiring Connections:

H. Section 284600 - Fire Detection and Alarm:
   1. Fire and smoke detectors and interconnecting devices.
   2. Fire alarm signal lines to elevator controller cabinet.

I. Section 312316 - Excavation: Excavation for cylinder casing, hydraulic lines, and remote machine room.

1.04 REFERENCE STANDARDS

A. AAMA 611 - Specification for Anodized Architectural Aluminum.

B. ADA Standards - 2010 ADA Standards for Accessible Design.

C. AISC 360 - Specification for Structural Steel Buildings.

D. ASCE 7 - Minimum Design Loads and Associated Criteria for Buildings and Other Structures.

E. ASME A17.1 - Safety Code for Elevators and Escalators Includes Requirements for Elevators, Escalators, Dumbwaiters, Moving Walks, Material Lifts, and Dumbwaiters with Automatic Transfer Devices.

F. ASME A17.2 - Guide for Inspection of Elevators, Escalators, and Moving Walks Includes Inspection Procedures for Electric Traction and Winding Drum Elevators, Hydraulic Elevators, Inclined Elevators, Limited-Use/Limited-Application Elevators, Private Residence Elevators, Escalators, Moving Walks, Dumbwaiters, and Material Lifts.

G. ASTM A139/A139M - Standard Specification for Electric-Fusion (Arc)-Welded Steel Pipe (NPS 4 and Over).

H. ASTM A666/A666M - Standard Specification for Annealed or Cold-Worked Austenitic Stainless Steel Sheet, Strip, Plate, and Flat Bar.

I. ASTM B209/B209M - Standard Specification for Aluminum and Aluminum-Alloy Sheet and Plate.

J. ASTM B221 - Standard Specification for Aluminum and Aluminum-Alloy Extruded Bars, Rods, Wire, Profiles, and Tubes.

K. ASTM B221M - Standard Specification for Aluminum and Aluminum-Alloy Extruded Bars, Rods, Wire, Profiles, and Tubes (Metric).

L. AWS D1.1/D1.1M - Structural Welding Code - Steel.

M. NEMA LD 3 - High-Pressure Decorative Laminates.

N. NEMA MG 00001 - Motors and Generators.

O. NFPA 13 - Standard for the Installation of Sprinkler Systems.

P. NFPA 70 - National Electrical Code.

Q. NFPA 80 - Standard for Fire Doors and Other Opening Protectives.

R. PS 1 - Structural Plywood.

1.05 ADMINISTRATIVE REQUIREMENTS

A. Coordination:
   1. Coordinate work with other installers to provide conduits necessary for installation of wiring including but not limited to:
      a. Elevator equipment devices remote from elevator machine room or hoistway.
      b. Remote group automatic panel from controller cabinet.
      c. Telephone service for machine room.
      d. Elevator pit for lighting and sump pump.

e. Automatic transfer switch from controller cabinet.
f. Fire alarm panel from controller cabinet.

2. Coordinate work with other installers for equipment provisions necessary for proper elevator operation, including but not limited to, the following:
   a. Automatic transfer switches with auxiliary contacts for emergency power transfer status indication.
   b. Shunt trip devices for automatic disconnection of elevator power prior to fire suppression system activation.
   c. Overcurrent protection devices selected to achieve required selective coordination.
3. Coordinate with the Authority Having Jurisdiction (AHJ) in meeting all permit requirements including applying for and securing permits. In addition it is the responsibility of the contractor to coordinate and schedule all inspections required by the AHJ during the course of the work, for successful completion of the work and final acceptance of the work by the AHJ.

B. Preinstallation Meeting: Convene meeting at least one week prior to start of this work.
1. Review schedule of installation, proper procedures and conditions, and coordination with related work.

C. Construction Use of Elevator: Elevator may be used for transport of construction personnel and materials in compliance with ASME A17.1.
1. Enclose car with protective plywood on floor, walls, and ceiling.
2. Provide temporary lighting.
3. Provide control panel with manual and emergency operation.

1.06 SUBMITTALS

A. See Section 013000 - Administrative Requirements for submittal procedures.

B. Product Data: Submit data on following items:
1. Signal and operating fixtures, operating panels, and indicators.
2. Car design, dimensions, layout, and components.
3. Car and hoistway door and frame details.
4. Electrical characteristics and connection requirements.

C. Shop Drawings: Include appropriate plans, elevations, sections, diagrams, and details on following items:
1. Elevator Equipment and Machines: Size and location of driving machines, power units, controllers, governors, and other components.
2. Hoistway Components: Size and location of car guide rails, buffers, jack unit and other components.
3. Rail bracket spacing; maximum loads imposed on guide rails requiring load transfer to building structural framing.
4. Clearances and over-travel of car.
5. Locations in hoistway and machine room of traveling cables and connections for car lighting and telephone.
6. Location and sizes of hoistway and car doors and frames.
7. Electrical characteristics and connection requirements.
8. Indicate arrangement of elevator equipment and allow for clear passage of equipment through access openings.

D. Samples: Submit samples illustrating car interior finishes, car and hoistway door and frame finishes, and handrail material and finish in the form of cut sheets or finish color selection brochures.

E. Manufacturer's Qualification Statement.

F. Installer's Qualification Statement.

G. Testing Agency's Qualification Statement.

H. Warranty Documentation: Submit manufacturer warranty and ensure that forms have been completed in Owner's name and registered with manufacturer.

I. Initial Maintenance Contract.

J. Maintenance Contract: Submit proposal to Owner for standard one year continuing maintenance contract agreement in accordance with ASME A17.1 and requirements as indicated, starting on date initial maintenance contract is scheduled to expire.
   1. Indicate in proposal the services, obligations, conditions, and terms for agreement period and for renewal options.

K. Operation and Maintenance Data:
   1. Parts catalog with complete list of equipment replacement parts; identify each entry with equipment description and identifying code.
   2. Operation and maintenance manual.
   3. Schematic drawings of equipment and hydraulic piping, and wiring diagrams of installed electrical equipment with list of corresponding symbols to identify markings on machine room and hoistway apparatus.

1.07 QUALITY ASSURANCE

A. Designer Qualifications: Design guide rails, brackets, anchors, and machine anchors under direct supervision of a licensed Professional Structural Engineer experienced in design of this type of work and licensed in the State in which the Project is located.

B. Manufacturer Qualifications: Company specializing in manufacturing the products specified in this section with minimum ten years documented experience.

C. Installer Qualifications: Company specializing in performing the work of this section and approved by elevator equipment manufacturer.

D. Testing Agency Qualifications: Independent firm specializing in performing testing and inspections of type specified in this section.

1.08 WARRANTY

A. See Section 017800 - Closeout Submittals for additional warranty requirements.

B. Provide manufacturer's warranty for elevator operating equipment and devices for one year from Date of Substantial Completion.

PART 2 PRODUCTS

2.01 MANUFACTURERS

A. Hydraulic Elevator Manufacturers:
   1. Otis Elevator Company; : www.otis.com.
   2. Schindler Elevator Corporation : www.schindler.com/#sle.
   3. ThyssenKrupp Elevator; : www.thyssenkruppelevator.com.
   4. Kone Elevator; ; www.kone.us

B. Substitutions: See Section 016000 - Product Requirements.

C. Source Limitations: Provide elevator and associated equipment and components produced by the same manufacturer as the other elevator equipment used for this project and obtained from a single supplier.

2.02 COMPONENTS

A. Elevator Equipment:
   1. Motors, Hydraulic Equipment, Controllers, Controls, Buttons, Wiring, Devices, and Indicators: Comply with NFPA 70; see Section 260583.
   2. Buffers:
   3. Lubrication Equipment:

B. Electrical Equipment:
   1. Motors: NEMA MG 1.

2. Boxes, Conduit, Wiring, and Devices: As required by NFPA 70; see Sections 260533.13 and 260583.
3. Spare Conductors: Provide ten percent in extra conductors and two pairs of shielded audio cables in traveling cables.
4. Include wiring and connections to elevator devices remote from hoistway and between elevator machine room. Provide additional components and wiring to suit machine room layout. See Section 260583.

2.03 PERFORMANCE REQUIREMENTS

A. Regulatory Requirements: Comply with ASME A17.1, applicable local codes, and authorities having jurisdiction (AHJ).

B. Accessibility Requirements: Comply with ADA Standards.

C. Perform structural steel design, fabrication, and installation in accordance with AISC 360.

D. Comply with seismic design requirements in accordance with ASME A17.1, applicable local codes, and authorities having jurisdiction (AHJ).
1. Complying with Elevator Safety Requirements for Seismic Risk Zone in accordance with ASME A17.1, ASCE 7 and other related requirements.
   a. Project Seismic Risk: As indicated on drawings.
2. Provide earthquake emergency operations in accordance with ASME A17.1 requirements.

E. Perform welding of steel in accordance with AWS D1.1/D1.1M.

F. Fabricate and install door and frame assemblies in accordance with NFPA 80 and in compliance with requirements of authorities having jurisdiction.

G. Perform electrical work in accordance with NFPA 70.

H. Comply with venting or pressurization of hoistway design in accordance with HVAC system requirements and authorities having jurisdiction (AHJ).

I. Comply with fire protection sprinkler system of hoistway design in accordance with NFPA 13 requirements and authorities having jurisdiction (AHJ). See Section 211300.

2.04 OPERATION CONTROLS

A. Elevator Controls: Provide landing operating panels and landing indicator panels.
1. Landing Operating Panels: Metallic type, one for originating "Up" and one for originating "Down" calls, one button only at terminating landings; with illuminating indicators.
2. Landing Indicator Panels: Illuminating.
3. Comply with ADA Standards for elevator controls.

B. Interconnect elevator control system with building security, fire alarm, and smoke alarm systems.

C. Door Operation Controls:
1. Program door control to open doors automatically when car arrives at floor landing.
2. Render "Door Close" button inoperative when car is standing at dispatch landing with doors open.
3. Door Safety Devices: Moveable, retractable safety edges, quiet in operation; equipped with photo-electric light rays.

D. Provide "Firefighter's Emergency Operation" in accordance with ASME A17.1, applicable building codes, and authorities having jurisdiction (AHJ).

2.05 OPERATION CONTROL TYPE

A. Single Automatic (Push Button) Operation Control: Applies to car in single elevator shaft.
1. Refer to description provided in ASME A17.1.
2. Set system operation so that momentary pressure of landing button dispatches car from other landing to that landing.

3. Allow call registered by momentary pressure of landing button at any time to remain registered until car stops in response to that landing call.
4. If elevator car door is not opened within predetermined period of time after car has stopped at terminal landing allow car to respond to call registered from other landing.

2.06 SERVICE CONTROL TYPE

A. Restricted Access Service Control:
1. Landing Call Lock-out: Provide a key operated switch with key removable from "On" or "Off" position in landing control station that performs the following when activated:
a. Restricts or permits landing call registration for that landing.
b. Causes the elevator to not respond to that landing.
2. Allow "Firefighter's Emergency Operation" to take control priority over "Restricted Access Service Control".

2.07 EMERGENCY POWER

A. Set-up elevator operation to run with elevator emergency power supply when the normal building power supply fails, and in compliance with ASME A17.1 requirements.

B. Elevator Emergency Power Supply: Supplied by battery backup; provide elevator system components as required for emergency power characteristics.

C. Emergency Lighting: Comply with ASME A17.1 elevator lighting requirements.

D. Provide operational control circuitry for adapting the change from normal to emergency power.

E. Upon transfer to emergency power, advance one elevator at a time to a pre-selected landing, stop car, open doors, disable operating circuits, and hold in standby condition.

2.08 MATERIALS

A. Steel Cylinder Casing: ASTM A139/A139M, Grade A steel.

B. Stainless Steel Sheet: ASTM A666/A666M, Type 304; finish unless otherwise indicated.

C. Extruded Aluminum: ASTM B221 (ASTM B221M), natural anodized finish unless otherwise indicated.

D. Aluminum Sheet: ASTM B209/B209M, 3105 alloy, O temper.

E. Plywood: PS 1, Structural I, Grade C-D or better, sanded.

F. Resilient Flooring: Vinyl tile flooring and Resilient base, see Section 096500.

G. Plastic Laminate: NEMA LD 3, Type HGS, color as selected by Architect from manufacturer's standard line of colors.

2.09 CAR AND HOISTWAY ENTRANCES

A. Elevator No. 01:
1. Car and Hoistway Entrances, Each Elevator Floor Lobby:
a. Hoistway Fire Rating: 2 Hours.
b. Framed Opening Finish and Material: Brushed stainless steel.
c. Car Door Material: Powder coat on steel, with rigid sandwich panel construction.
d. Hoistway Door Material: Stainless steel, with rigid sandwich panel construction.
e. Door Type: Single leaf.
f. Door Operation: Side opening, two speed.
g. Paint Color: As selected by Architect from manufacturer's standard line.
h. Door Width: 36 inches.
i. Door Height: 84 inches.
j. Sills: Extruded aluminum.

B. Elevator, No. 02:
1. Car and Hoistway Entrances, Each Elevator Floor Lobby:
a. Framed Opening Finish and Material: Alkyd enamel on steel.

b. Car Door Material: Powder coat on steel, with rigid sandwich panel construction.
c. Hoistway Door Material: Powder coat on steel, with rigid sandwich panel construction.
d. Paint Color: As selected by Architect from manufacturer's standard line.
e. Door Width: 36 inches.
f. Door Height: 84 inches.
g. Sills: Extruded aluminum.

C. Sills/Thresholds: Configure to align with frame return and coordinate with floor finish.

D. Gasketing: Provide acoustic type gasketing at hoistway doors and frames to eliminate audible noise due to car activities in the hoistway, and air pressure differential between hoistway and landing floors.

2.10 CAR EQUIPMENT AND MATERIALS

A. Elevator Car, No. 01 and 02:
1. Car Operating Panel: Provide main and auxiliary; flush-mounted applied face plate, with illuminated call buttons corresponding to floors served with "Door Open/Door Close" buttons, "Door Open" button, "Door Close" button, and alarm button.
a. Panel Material: Integral with front return; one per car.
b. Car Floor Position Indicator: Above door with illuminating position indicators.
c. Locate alarm button where it is unlikely to be accidentally actuated; not more than 54 inch above car finished floor.
d. Provide matching service cabinet integral with front return panel, with hinged door and keyed lock in each car.
e. Provide following within service cabinet as part of car operating panel:
1) Switch for each auxiliary operational control, keyed.
2) Switches for fan, light, and inspection control.
3) Emergency light.
4) Telephone cabinet and hard-wired connection with telephone.
5) Control for each other special feature specified.
f. Provide convenience outlet receptacle; 110VAC, 15 amps, locate below service cabinet.
2. Flooring: Resilient vinyl tile.
3. Front Return Panel: Match material of car door.
4. Door Wall: Plastic laminate on plywood.
5. Side Walls: Plastic laminate on plywood.
6. Rear Wall: Plastic laminate on plywood.
7. Hand Rail: Stainless steel, at all three sides. Provide open clearance space 1-1/2 inch (38 mm) wide to face of wall.
a. Flat Bar Stock, Solid: 1/4 inch thick by 2 inch high.
b. Stainless Steel Finish: No. 4 Brushed.
8. Ceiling: Car 02 metal ceiling to remain
a. Canopy Ceiling: Stainless steel.
b. Frame Finish: Color anodized aluminum.
c. Lay-in Panel: Aluminum sheet.
d. Lighting: 4 LED recessed lights.
9. Provide emergency access panel for egress from car at ceiling.

2.11 MACHINE ROOM FITTINGS

2.12 FINISHES

A. Powder Coat on Steel: Clean and degrease metal surface; apply one coat of primer; two coats of powder coat.

B. Baked Enamel on Steel: Clean and degrease metal surface; apply one coat of primer sprayed and baked; two coats of enamel sprayed and baked.

C. Finish Paint for Metal Surfaces: Alkyd enamel, semi-gloss, color as selected, complying with VOC limitations of authorities having jurisdiction (AHJ).

D. Color Anodized Finish: Class I, AAMA 611 AA-M12C22A44, electrolytically deposited colored anodic coating not less than 0.7 mil, 0.0007 inch thick.

PART 3 EXECUTION

3.01 EXAMINATION

A. Verify existing conditions before starting this work.

B. Verify that hoistway, pit, and machine room are ready for work of this section.

C. Verify hoistway shaft and openings are of correct size and within tolerance.

D. Verify location and size of machine foundation and position of machine foundation bolts.

E. Verify that electrical power is available and of correct characteristics.

3.02 PREPARATION

A. Arrange for temporary electrical power for installation work and testing of elevator components; see Section 015000 - Temporary Facilities and Controls for additional requirements.

B. Maintain elevator pit excavation free of water.

3.03 INSTALLATION

A. Coordinate this work with installation of hoistway wall construction.

B. Install system components, and connect equipment to building utilities.

C. Provide conduit, electrical boxes, wiring, and accessories; see Sections 260533.13 and 260583.

D. Install hydraulic piping between cylinder and pump unit.

E. Mount machines, motors, and pumps on vibration and acoustic isolators.
   1. Place on structural supports and bearing plates.
   2. Securely fasten to building supports.
   3. Prevent lateral displacement.

F. Install hoistway, elevator equipment, and components in accordance with approved shop drawings.

G. Install guide rails to allow for thermal expansion and contraction movement of guide rails.

H. Accurately machine and align guide rails, forming smooth joints with machined splice plates.

I. Install hoistway door sills, frames, and headers in hoistway walls; grout sills in place, set hoistway floor entrances in alignment with car openings, and align plumb with hoistway.

J. Structural Metal Surfaces: Clean surfaces of rust, oil or grease; wipe clean with solvent; prime two coats.

K. Wood Surfaces not Exposed to Public View: Finish with one coat primer; one coat enamel.

L. Adjust equipment for smooth and quiet operation.

3.04 TOLERANCES

A. Guide Rail Alignment: Plumb and parallel to each other in accordance with ASME A17.1 and ASME A17.2.

B. Car Movement on Aligned Guide Rails: Smooth movement, without any objectionable lateral or oscillating movement or vibration.

3.05 FIELD QUALITY CONTROL

A. See Section 014000 - Quality Requirements for additional requirements.

B. Testing and inspection by regulatory agencies certified in accordance with ASME QEI 1 will be performed at their discretion.

C. Perform testing and inspection in accordance with requirements.

D. Operational Tests:
   1. Perform operational tests in the presence of Owner and Architect.
   2. At an agreed time, and the building occupied with normal building traffic, conduct tests to verify performance.
      a. Furnish event recording of each landing call registrations, time initiated, and response time throughout entire working day.
   3. Set period of time elevator takes to travel between typical floor landings at not more than 15 seconds.
      a. Measure time from moment doors start to close until car has stopped level at next floor landing and doors are opening.

3.06 ADJUSTING

A. Adjust for smooth acceleration and deceleration of car to minimize passenger discomfort.

B. Adjust with automatic floor leveling feature at each floor landing to reach 1/4 inch maximum from flush with sill.

3.07 CLEANING

A. Remove protective coverings from finished surfaces.

B. Clean surfaces and components in accordance with manufacturers written instructions.

3.08 CLOSEOUT ACTIVITIES

A. Demonstrate proper operation of equipment to Owner's designated representative.

3.09 PROTECTION

A. Do not permit construction traffic within car after cleaning.

B. Protect installed products until Date of Substantial Completion.

C. Touch-up, repair, or replace damaged products and materials prior to Date of Substantial Completion.

3.10 MAINTENANCE

A. Provide Initial Maintenance Contract of elevator system and components in accordance with ASME A17.1 and requirements as indicated for 3 months from Date of Substantial Completion.

B. Perform maintenance contract services using competent and qualified personnel under the supervision and direct employ of the elevator manufacturer or original installer.

C. Include systematic examination, adjustment, and lubrication of elevator equipment.

D. Perform work without removing cars from use during peak traffic periods.

END OF SECTION

This page intentionally left blank

SECTION 220523
GENERAL-DUTY VALVES FOR PLUMBING PIPING

PART 1 GENERAL

1.01 SECTION INCLUDES

A. Ball valves.

B. Check valves.

1.02 RELATED REQUIREMENTS

1.03 ABBREVIATIONS AND ACRONYMS

A. CWP: Cold working pressure.

B. EPDM: Ethylene propylene copolymer rubber.

C. NBR: Acrylonitrile-butadiene, Buna-N, or nitrile rubber.

D. NRS: Non-rising stem.

E. OS&Y: Outside screw and yoke.

F. PFA: Perfluoroalkoxy alkane.

G. PTFE: Polytetrafluoroethylene.

H. RS: Rising stem.

I. TFE: Tetrafluoroethylene.

J. WOG: Water, oil, and gas.

1.04 REFERENCE STANDARDS

A. ASME B1.20.1 - Pipe Threads, General Purpose, Inch.

B. AWWA C606 - Grooved and Shouldered Joints.

C. MSS SP-80 - Bronze Gate, Globe, Angle, and Check Valves.

1.05 SUBMITTALS

A. See Section 013000 - Administrative Requirements for submittal procedures.

B. Product Data: Provide data on valves including manufacturers catalog information. Submit performance ratings, rough-in details, weights, support requirements, and piping connections.

PART 2 PRODUCTS

2.01 GENERAL REQUIREMENTS

A. Valve Pressure and Temperature Ratings: No less than rating indicated; as required for system pressures and temperatures.

B. Valve Sizes: Match upstream piping unless otherwise indicated.

C. Valve Actuator Types:
   1. Hand Lever: Quarter-turn valves 6 inch and smaller except plug valves.

D. Insulated Piping Valves: With 2 inch stem extensions and the following features:
   1. Gate Valves: Rising stem.
   2. Ball Valves: Extended operating handle of non-thermal-conductive material, and protective sleeve that allows operation of valve without breaking the vapor seal or disturbing insulation.

E. Valve-End Connections:
   1. Threaded End Valves: ASME B1.20.1.
   2. Grooved End Connections: AWWA C606.

F. General ASME Compliance:

2.02 BRONZE, BALL VALVES

A. General:
   1. Fabricate from dezincification resistant material.
   2. Copper alloys containing more than 15 percent zinc are not permitted.

2.03 BRONZE, SWING CHECK VALVES

A. General:
   1. Fabricate from dezincification resistant material.
   2. Copper alloys containing more than 15 percent zinc are not permitted.

B. Class 125:
   1. Pressure and Temperature Rating: MSS SP-80, Type 3.
   2. Design: Y-pattern, horizontal or vertical flow.
   3. WOG Rating: 200 psi.
   4. Body: Bronze.
   5. End Connections: Threaded.
   6. Disc: Bronze.

PART 3 EXECUTION

3.01 INSTALLATION

A. Provide unions or flanges with valves to facilitate equipment removal and maintenance while maintaining system operation and full accessibility for servicing.

B. Provide separate valve support as required and locate valve with stem at or above center of piping, maintaining unimpeded stem movement.

END OF SECTION 220523

SECTION 220548
VIBRATION AND SEISMIC CONTROLS FOR PLUMBING PIPING AND EQUIPMENT

PART 1 GENERAL

1.01 SECTION INCLUDES

A. External seismic snubber assemblies.

B. Seismic restraint systems.

1.02 RELATED REQUIREMENTS

A. Section 033000 - Cast-in-Place Concrete.

1.03 REFERENCE STANDARDS

A. ASCE 7 - Minimum Design Loads and Associated Criteria for Buildings and Other Structures.

B. ASCE 19 - Structural Applications of Steel Cables for Buildings.

C. FEMA 412 - Installing Seismic Restraints for Mechanical Equipment.

D. FEMA 414 - Installing Seismic Restraints for Duct and Pipe.

E. FEMA E-74 - Reducing the Risks of Nonstructural Earthquake Damage.

F. MFMA-4 - Metal Framing Standards Publication.

G. SMACNA (SRM) - Seismic Restraint Manual Guidelines for Mechanical Systems.

1.04 SUBMITTALS

A. See Section 013000 - Administrative Requirements for submittal procedures.

B. Shop Drawings - Seismic Controls:
   1. Include dimensioned plan views and sections indicating proposed plumbing component locations and distributed system routing, with locations and details of gravity supports and seismic restraints and associated attachments.
   2. Identify anchor manufacturer, type, minimum embedment, minimum spacing, minimum member thickness, and minimum edge distance requirements.
   3. Indicate proposed arrangement of distributed system trapeze support groupings.
   4. Indicate proposed locations for distributed system flexible fittings and/or connections.
   5. Indicate locations of seismic separations where applicable.

C. Product Data:

D. Manufacturer's Instructions: Indicate installation instructions with special procedures and setting dimensions.

1.05 QUALITY ASSURANCE

A. Comply with applicable building code.

B. Perform design and installation in accordance with applicable codes.

PART 2 PRODUCTS

2.01 MANUFACTURERS

A. The VMC Group; thevmcgroup.com

B. B-line: www.cooperindustries.com

2.02 PERFORMANCE REQUIREMENTS

A. General:
   1. All vibration isolators, base frames and inertia bases to conform to all uniform deflection and stability requirements under all operating loads.
   2. Steel springs to function without undue stress or overloading.

3. Steel springs to operate in the linear portion of the load versus deflection curve over deflection range of not less than 50 percent above specified deflection.
4. Lateral to vertical stiffness ratio to not exceed 0.08 with spring deflection at minimum 75 percent of specified deflection.
5. All equipment mounted on vibration isolated bases to have minimum operating clearance of 2 inches between the base and floor or support beneath unless noted otherwise.

2.03 VIBRATION-ISOLATED EQUIPMENT SUPPORT BASES

A. Structural Bases:
1. Construction: Engineered, structural steel frames with welded brackets for side mounting of the isolators.
2. Frames: Square, rectangular or T-shaped.
3. Design: Sufficiently rigid to prevent misalignment or undue stress on machine, and to transmit design loads to isolators and snubbers.

B. Concrete Inertia Bases:
1. Construction: Engineered, steel forms, with integrated isolator brackets and anchor bolts, welded or tied reinforcing bars running both ways in a single layer.
2. Size: 6 inches minimum depth and sized to accommodate elbow supports.
3. Mass: Minimum of 1.5 times weight of isolated equipment.
4. Connecting Point: Reinforced to connect isolators and snubbers to base including template and fastening devices for equipment.
5. Concrete: Filled on site with minimum 3000 psi concrete. See Section 033000 for additional requirements.

2.04 EXTERNAL SEISMIC SNUBBER ASSEMBLIES

A. Description: Steel snubbing assemblies designed for external attachment to both equipment and supporting structure that, as part of a complete system, restrain equipment motion in all directions during a seismic event while maintaining vibration isolation during normal operation.

B. Seismic Snubbing Elements:
1. Air Gap: Between 0.125 inches and 0.25 inches unless otherwise indicated.
2. Points of Contact: Cushioned with resilient material, minimum 0.25 inch thick; capable of being visually inspected for damage and replaced.

C. Comply with:
1. FEMA 412.
2. FEMA 414.
3. FEMA E-74.
4. SMACNA (SRM).

2.05 SEISMIC RESTRAINT SYSTEMS

A. Description: System components and accessories specifically designed for field assembly and attachment of seismic restraints.

B. Cable Restraints:
1. Comply with ASCE 19.
2. Cables: Pre-stretched, galvanized steel wire rope with certified break strength.
3. Cable Connections: Use only swaged end fittings. Cable clips and wedge type end fittings are not permitted in accordance with ASCE 19.
4. Use protective thimbles for cable loops where potential for cable damage exists.

C. Rigid Restraints: Use MFMA-4 steel channel (strut), steel angle, or steel pipe for structural element; suitable for both compressive and tensile design loads.

D. Comply with:
1. FEMA 412.

2. FEMA 413.
3. FEMA 414.
4. FEMA E-74.
5. SMACNA (SRM).

PART 3 EXECUTION

3.01 INSTALLATION

A. Install products in accordance with manufacturer's instructions.

B. Install anchors and fasteners in accordance with ICC Evaluation Services, LLC (ICC-ES) evaluation report conditions of use where applicable.

C. Secure fasteners according to manufacturer's recommended torque settings.

D. Install flexible piping connections to provide sufficient slack for vibration isolation and/or seismic relative displacements as indicated or as required.

3.02 INSTALLATION - GENERAL

A. Install in accordance with manufacturer's instructions.

3.03 INSTALLATION - SEISMIC

A. Comply with:
1. FEMA 412.
2. FEMA 414.
3. FEMA E-74.

B. Seismic Snubbers:
1. Provide minimum of four seismic snubbers located close to isolators.
2. Snub equipment designated for post-disaster use to 0.05 inch maximum clearance.
3. Snub all other equipment between 0.15 inch and 0.25 inch clearance.

C. Floor and Base-Mounted Equipment, Vibration Isolated Equipment and associated Vibration and Seismic Controls for Connections:
1. Install equipment anchorage items designed to resist seismic design force in any direction.
2. Install vibration and seismic controls designed to include base and isolator requirements.
3. Provide flexible connections between equipment and interconnected piping.
4. Provide isolators and restraints designed for amplified code forces per ASCE 7 and with demonstrated ability to resist required forces including gravity, operational and seismic forces.
5. Where equipment is not designed to be point loaded, provide base capable of transferring gravity and seismic demands from equipment to isolator base plate anchorage.
6. Where concrete floor thickness is less than required for expansion anchor installation, install through bolt in lieu of expansion anchor.

3.04 SCHEDULES

A. Pipe Isolation Schedule.
1. 1 Inch Pipe Size: Isolate 120 diameters from equipment.
2. 2 Inch Pipe Size: Isolate 90 diameters from equipment.
3. 3 Inch Pipe Size: Isolate 80 diameters from equipment.
4. 4 Inch Pipe Size: Isolate 75 diameters from equipment.
5. 6 Inch Pipe Size: Isolate 60 diameters from equipment.
6. 8 Inch Pipe Size: Isolate 60 diameters from equipment.

END OF SECTION 220548

SECTION 220553
IDENTIFICATION FOR PLUMBING PIPING AND EQUIPMENT

PART 1 GENERAL

1.01 SECTION INCLUDES

A. Nameplates.

B. Tags.

C. Stencils.

D. Pipe markers.

E. Ceiling tacks.

1.02 REFERENCE STANDARDS

A. ASME A13.1 - Scheme for the Identification of Piping Systems.

B. ASME A13.1 - Scheme for the Identification of Piping Systems.

1.03 SUBMITTALS

A. Submittal is not required.

PART 2 PRODUCTS

2.01 PLUMBING COMPONENT IDENTIFICATION GUIDELINE

A. Pipe Markers: 3/4 inch diameter and higher.

2.02 IDENTIFICATION MANUFACTURERS

A. Kolbi Pipe Marker Co.: www.kolbipipemarkers.com.

B. Seton Identification Products: www.seton.com.

C. Brady Corp. .

D. Craftmark Identification Systems.

E. Labelmaster

F. VisionMark, Inc.

G. Almetek Industries, Inc.

H. Advanced Graphic Engraving: www.advancedgraphicengraving.com.

I. MIFAB, Inc.: www.mifab.com.

J. Substitutions: See Section 016000 - Product Requirements.

2.03 NAMEPLATES

A. Description: Laminated piece with up to three lines of text.
   1. Letter Color: White.
   2. Letter Height: 1/2 inch.
   3. Background Color: Black.

2.04 TAGS

A. Flexible: Vinyl with engraved black letters on light contrasting background color with up to three lines of text. Minimum tag size 1-1/2 inch in diameter.

B. Metal Tags: Brass with stamped letters, character size and words to ANSI A13.1; tag size minimum 1-1/2 inch diameter with smooth edges.

C. Valve Tag Chart: Typewritten 12-point letter size list in anodized aluminum frame.

2.05 PIPE MARKERS

A. Comply with ASME A13.1.

B. Flexible Marker: Factory fabricated, semi-rigid, preformed to fit around pipe or pipe covering; minimum information indicating flow direction arrow and identification of fluid conveyed.

C. Flexible Tape Marker: Flexible, vinyl film tape with pressure-sensitive adhesive backing and printed markings.

D. Underground Flexible Marker: Bright-colored continuously printed ribbon tape, minimum 6 inches wide by 4 mil, 0.004 inch thick, manufactured for direct burial service.

E. Identification Scheme, ASME A13.1:
   1. Primary: External Pipe Diameter, Uninsulated or Insulated.
   2. Secondary: Color scheme per fluid service.
      a. Water; Potable, Cooling, Boiler Feed, and Other: White text on green background.

PART 3 EXECUTION

3.01 INSTALLATION

A. Install flexible nameplates with corrosive-resistant mechanical fasteners, or adhesive. Apply with sufficient adhesive to ensure permanent adhesion and seal with clear lacquer.

B. Install tags in clear view and align with axis of piping

C. Install plastic pipe markers in accordance with manufacturer's instructions.

D. Install plastic tape pipe marker around pipe in accordance with manufacturer's instructions.

E. Install underground plastic pipe markers 6 to 8 inches below finished grade, directly above buried pipe.

F. Install identification in clear view and align with axis of piping.

G. Locate identification not to exceed 20 feet on straight runs including risers and drops, adjacent to each valve and Tee, at each side of penetration of structure or enclosure, and at each obstruction.

H. Locate ceiling tacks to locate valves above lay-in panel ceilings. Locate in corner of panel closest to equipment.

END OF SECTION 220553

SECTION 220719
PLUMBING PIPING INSULATION

PART 1 GENERAL

1.01 SECTION INCLUDES

A. Cellular glass insulation.

B. Flexible elastomeric cellular insulation.

C. Glass fiber insulation.

D. Jacketing and accessories.

1.02 RELATED REQUIREMENTS

A. Section 078400 - Firestopping.

B. Section 099123 - Interior Painting: Painting insulation jacket.

C. Section 221005 - Plumbing Piping: Placement of hangers and hanger inserts.

1.03 REFERENCE STANDARDS

A. ASTM C534/C534M - Standard Specification for Preformed Flexible Elastomeric Cellular Thermal Insulation in Sheet and Tubular Form.

B. ASTM C547 - Standard Specification for Mineral Fiber Pipe Insulation.

C. ASTM C552 - Standard Specification for Cellular Glass Thermal Insulation.

D. ASTM C578 - Standard Specification for Rigid, Cellular Polystyrene Thermal Insulation.

E. ASTM C585 - Standard Practice for Inner and Outer Diameters of Thermal Insulation for Nominal Sizes of Pipe and Tubing.

F. ASTM C591 - Standard Specification for Unfaced Preformed Rigid Cellular Polyisocyanurate Thermal Insulation.

G. ASTM C795 - Standard Specification for Thermal Insulation for Use in Contact with Austenitic Stainless Steel.

H. ASTM E84 - Standard Test Method for Surface Burning Characteristics of Building Materials.

I. ASTM E96/E96M - Standard Test Methods for Gravimetric Determination of Water Vapor Transmission Rate of Materials.

J. UL 723 - Standard for Test for Surface Burning Characteristics of Building Materials.

1.04 SUBMITTALS

A. See Section 013000 - Administrative Requirements for submittal procedures.

B. Product Data: Provide product description, thermal characteristics, list of materials and thickness for each service, and locations.

C. Test Reports: For plumbing piping insulation, provide independent laboratory reports and test results showing negative asbestos containing materials content using Polarized Light Microscopy (PLM) test method.

1.05 QUALITY ASSURANCE

A. Applicator Qualifications: Company specializing in performing the type of work specified in this section with minimum _____ years of experience.

1.06 DELIVERY, STORAGE, AND HANDLING

A. Accept materials on site, labeled with manufacturer's identification, product density, and thickness.

1.07 FIELD CONDITIONS

A. Maintain ambient conditions required by manufacturers of each product.

B. Maintain temperature before, during, and after installation for minimum of 24 hours.

PART 2 PRODUCTS

2.01 REGULATORY REQUIREMENTS

A. Surface Burning Characteristics: Flame spread index/Smoke developed index of 25/50, maximum, when tested in accordance with ASTM E84, UL 723, ASTM E84, or UL 723.

2.02 GLASS FIBER INSULATION

A. Manufacturers:

B. Insulation: ASTM C547 and ASTM C795; rigid, preformed pipe insulation, noncombustible.
   1. K Value: 0.24 at 75 degrees F.
   2. Maximum Service Temperature: 850 degrees F.
   3. Maximum Moisture Absorption: 0.2 percent by volume.

C. Insulation: ASTM C547 and ASTM C795; semi-rigid, v-grooved, noncombustible, end grain adhered to jacket.
   1. K Value: 0.24 at 75 degrees F.
   2. Maximum Service Temperature: 650 degrees F.
   3. Maximum Moisture Absorption: 0.2 percent by volume.

D. Vapor Barrier Jacket: White Kraft paper with glass fiber yarn, bonded to aluminized film; moisture vapor transmission when tested in accordance with ASTM E96/E96M of 0.02 perm.

E. Vapor Barrier Jacket: ASJ (all service jacket), white, triple-ply laminate polypropylene, mold resistant, metalized polyester vapor barrier film backing.
   1. Manufacturers:
      a. Venture Tape: 1555U; www.venturetape.com.
      b. Polyguard: Insulrap 30 vapor barrier I-30; www.polyguardproducts.com.
      c. Substitutions: See Section 016000 - Product Requirements.

F. Tie Wire: 0.048 inch stainless steel with twisted ends on maximum 12 inch centers.

G. Vapor Barrier Lap Adhesive: Compatible with insulation.

H. Insulating Cement/Mastic: ASTM C195; hydraulic setting on mineral wool.

I. Fibrous Glass Fabric:
   1. Cloth: Untreated; 9 oz/sq yd weight.
   2. Blanket: 1.0 pcf density.
   3. Weave: 5 by 5.

J. Indoor Vapor Barrier Finish:
   1. Cloth: Untreated; 9 oz/sq yd weight.
   2. Vinyl emulsion type acrylic, compatible with insulation, white color.

K. Outdoor Vapor Barrier Mastic: Vinyl emulsion type acrylic or mastic, compatible with insulation, black color.

L. Outdoor Breather Mastic: Vinyl emulsion type acrylic or mastic, compatible with insulation, black color.

M. Insulating Cement: ASTM C449.

2.03 CELLULAR GLASS INSULATION

A. Manufacturers:
   1. Pittsburgh Corning Corporation: www.foamglasinsulation.com.
   2. Substitutions: See Section 016000 - Product Requirements.

B. Insulation: ASTM C552, Type II, Grade 6.
   1. K Value: 0.35 at 100 degrees F.
   2. Service Temperature Range: From 250 degrees F to 800 degrees F.
   3. Water Vapor Permeability: 0.005 perm inch maximum per inch.

4. Water Absorption: 0.5 percent by volume, maximum.

C. Self-Seal Lap Joint Sealant:
   1. Compatible with insulation and Jacketing.

D. Insulation Securement:
   1. Stripping Tape: Glass fiber-reinforced, 1" wide, Scotch Brand Filament #880 by 3M or approved equal.
      a. Application: temporary securement for piping insulation that is covered with metal jacketing afterwiords.
   2. Metal Bands: AISI type 304 (BSI 304 S16) stainless steel. 0.5" x 0.015" bands with matching seals.
      a. Application: permanent securement for piping insulation that is not covered with metal jacketing afterwards.

E. Factory-applied or Field-applied Jacketing for Underground Piping:
   1. PITTWRAP® CW Plus Jacketing: 50 mil thick self-sealing high polymer asphalt membrane with an integral glass scrim and an aluminized Mylar film on the surface.
   2. Service Termperature: Up to 20 to 170 degree F.
   3. Water Vapor Permeability: 0.002 perm inch.

F. Vapor Retarder Mastic for Underground Application: PITTCOTE 300 Finish - asphalt coating especially formulated for use with FOAMGLAS® insulation.
   1. Reinforcing Fabric: PC® Fabric 79, synthetic fabric, 6.5x 6 mesh.

2.04 FLEXIBLE ELASTOMERIC CELLULAR INSULATION

A. Manufacturers:
   1. Substitutions: See Section 016000 - Product Requirements.

B. Insulation: Preformed flexible elastomeric cellular rubber insulation complying with ASTM C534/C534M Type I Grade 1; use molded tubular material wherever possible.
   1. 'K' value: ASTM C177, 0.25 at 75 degrees F.
   2. Minimum Service Temperature: Minus 40 degrees F.
   3. Maximum Service Temperature: 250 degrees F.
   4. Maximum moisture absorption: 0.2 percent by volume.
   5. Connection: Waterproof vapor barrier adhesive.
   6. Color: White

C. Elastomeric Foam Adhesive: Air dried, contact adhesive, low VOC, compatible with insulation.

2.05 JACKETING AND ACCESSORIES

A. PVC Plastic Jacket:
   1. Jacket: One piece molded type fitting covers and sheet material, off-white color.
      a. Minimum Service Temperature: 0 degrees F.
      b. Maximum Service Temperature: 150 degrees F.
      c. Moisture Vapor Permeability: 0.002 perm inch, maximum, when tested in accordance with ASTM E96/E96M.
      d. Thickness: 10 mil, 0.010 inch.
      e. Connections: Brush on welding adhesive.
   2. Covering Adhesive Mastic: Compatible with insulation.

PART 3 EXECUTION

3.01 EXAMINATION

A. Verify that piping has been tested before applying insulation materials.

B. Verify that surfaces are clean and dry, with foreign material removed.

3.02 INSTALLATION

A. Install in accordance with manufacturer's instructions.

B. Exposed Piping: Locate insulation and cover seams in least visible locations.

C. Insulated pipes conveying fluids below ambient temperature: Insulate entire system including fittings, valves, unions, flanges, strainers, flexible connections, pump bodies, and expansion joints.

D. Glass fiber insulated pipes conveying fluids below ambient temperature:
   1. Provide vapor barrier jackets, factory-applied or field-applied. Secure with self-sealing longitudinal laps and butt strips with pressure-sensitive adhesive. Secure with outward clinch expanding staples and vapor barrier mastic.
   2. Insulate fittings, joints, and valves with molded insulation of like material and thickness as adjacent pipe. Finish with glass cloth and vapor barrier adhesive or PVC fitting covers.

E. For hot piping conveying fluids 140 degrees F or less, do not insulate flanges and unions at equipment, but bevel and seal ends of insulation.

F. For hot piping conveying fluids over 140 degrees F, insulate flanges and unions at equipment.

G. Glass fiber insulated pipes conveying fluids above ambient temperature:
   1. Provide standard jackets, with or without vapor barrier, factory-applied or field-applied. Secure with self-sealing longitudinal laps and butt strips with pressure-sensitive adhesive. Secure with outward clinch expanding staples.
   2. Insulate fittings, joints, and valves with insulation of like material and thickness as adjoining pipe. Finish with glass cloth and adhesive or PVC fitting covers.

H. Inserts and Shields:
   1. Application: Piping 1-1/2 inches diameter or larger.
   2. Shields: Galvanized steel between pipe hangers or pipe hanger rolls and inserts.
   3. Insert Location: Between support shield and piping and under the finish jacket.
   4. Insert Configuration: Minimum 6 inches long, of same thickness and contour as adjoining insulation; may be factory fabricated.
   5. Insert material: Hydrous calcium silicate insulation or 7.5 lb/cu. ft. density cellular glass insulation.

I. Continue insulation through walls, sleeves, pipe hangers, and other pipe penetrations. Finish at supports, protrusions, and interruptions. At fire separations, see Section 078400.

J. Pipe Exposed in Mechanical Equipment Rooms (less than 10 feet above finished floor): Finish with PVC jacket and fitting covers.

K. Pipe Exposed in Finished Spaces: Finish with PVC jacket and fitting covers.

L. Exterior Applications: Provide vapor barrier jacket. Insulate fittings, joints, and valves with insulation of like material and thickness as adjoining pipe, and finish with glass mesh reinforced vapor barrier cement. Cover with aluminum jacket with seams located on bottom side of horizontal piping.

M. Buried Piping: Provide factory fabricated assembly with inner all-purpose service jacket with self-sealing lap, and asphalt impregnated open mesh glass fabric, with one mil, 0.001 inch thick aluminum foil sandwiched between three layers of bituminous compound; outer surface faced with a polyester film.

N. Buried Piping: Provide metal jacket where the system transitions from below ground to above ground.

3.03 SCHEDULES

A. In no case shall installed piping insulation have insulation thicknesses that are less than what is required by local energy codes and ASHRAE 90.1, based on comparable insulation conductivity values at the specified mean rating temperature.

B. See Plumbing Piping Insulation Application and Thickness Schedule on drawing.

C. Plumbing Piping Insulation Application and Thickness Schedule - Above Grade
   1. Types of Piping as applicable:

a. Domestic Cold Water, Hot Water, and Hot Water Recirculation
b. Tempered Water and Recirculation
c. Non-potable Cold Water, Hot Water, and Recirculation:
d. Roof Drain Bodies
e. Roof Drainage Within 10 Feet of the Exterior
f. Roof Drainage Run Horizontal at Roof Level
g. Plumbing Vents Within 10 Feet of the Exterior
h. Chilled Drinking Water Supply:
i. Chilled Drinking Water Recirculation:

2. Insulation:
   a. Glass Fiber Insulation:
      1) Pipe Size Range: 1-1/4 inch and smaller
         (a) Thickness: 1/2 inch
      2) Pipe Size Range: 1-1/2 inch and larger
         (a) Thickness: 1 inch
   b. Cellular Glass Insulation:
      1) Pipe Size Range: 1-1/4 inch and smaller
         (a) Thickness: 1/2 inch
      2) Pipe Size Range: 1-1/2 inch and larger
         (a) Thickness: 1 inch
   c. Flexible Elastomeric Cellular Insulatio:
      1) Pipe Size Range: 1-1/4 inch and smaller.
         (a) Thickness: 1/2 inch
      2) Pipe Size Range: 1-1/2 inch and larger
         (a) Thickness: 1 inch

END OF SECTION 220719

SECTION 221005
PLUMBING PIPING

PART 1 GENERAL

1.01 SECTION INCLUDES

A. Domestic water piping, buried within 5 feet of building.

B. Domestic water piping, above grade.

1.02 RELATED REQUIREMENTS

A. Section 330110.58 - Disinfection of Water Utility Piping Systems.

B. Section 220516 - Expansion Fittings and Loops for Plumbing Piping.

C. Section 220548 - Vibration and Seismic Controls for Plumbing Piping and Equipment.

D. Section 220553 - Identification for Plumbing Piping and Equipment.

E. Section 330110.58 - Disinfection of Water Utility Piping Systems.

1.03 REFERENCE STANDARDS

A. ASME B16.18 - Cast Copper Alloy Solder Joint Pressure Fittings.

B. ASME B16.22 - Wrought Copper and Copper Alloy Solder-Joint Pressure Fittings.

C. ASME B31.9 - Building Services Piping.

D. ASTM A123/A123M - Standard Specification for Zinc (Hot-Dip Galvanized) Coatings on Iron and Steel Products.

E. ASTM B32 - Standard Specification for Solder Metal.

F. ASTM B280 - Standard Specification for Seamless Copper Tube for Air Conditioning and Refrigeration Field Service.

G. ASTM C4 - Standard Specification for Clay Drain Tile and Perforated Clay Drain Tile.

H. ASTM D2564 - Standard Specification for Solvent Cements for Poly(Vinyl Chloride) (PVC) Plastic Piping Systems.

I. ASTM D2665 - Standard Specification for Poly(Vinyl Chloride) (PVC) Plastic Drain, Waste, and Vent Pipe and Fittings.

J. ASTM D2846/D2846M - Standard Specification for Chlorinated Poly(Vinyl Chloride) (CPVC) Plastic Hot- and Cold-Water Distribution Systems.

K. ASTM D2855 - Standard Practice for the Two-Step (Primer and Solvent Cement) Method of Joining Poly (Vinyl Chloride) (PVC) or Chlorinated Poly (Vinyl Chloride) (CPVC) Pipe and Piping Components with Tapered Sockets.

L. ASTM D3034 - Standard Specification for Type PSM Poly(Vinyl Chloride) (PVC) Sewer Pipe and Fittings.

M. ASTM F441/F441M - Standard Specification for Chlorinated Poly(Vinyl Chloride) (CPVC) Plastic Pipe, Schedules 40 and 80.

N. ASTM F442/F442M - Standard Specification for Chlorinated Poly(Vinyl Chloride) (CPVC) Plastic Pipe (SDR-PR).

O. CISPI 301 - Standard Specification for Hubless Cast Iron Soil Pipe and Fittings for Sanitary and Storm Drain, Waste, and Vent Piping Applications.

P. CISPI 310 - Specification for Coupling for Use in Connection with Hubless Cast Iron Soil Pipe and Fittings for Sanitary and Storm Drain, Waste, and Vent Piping Applications.

Q. MSS SP-58 - Pipe Hangers and Supports - Materials, Design, Manufacture, Selection, Application, and Installation.

R. MSS SP-67 - Butterfly Valves.

S. MSS SP-110 - Ball Valves Threaded, Socket-Welding, Solder Joint, Grooved and Flared Ends.

T. NSF 61 - Drinking Water System Components - Health Effects.

U. NSF 372 - Drinking Water System Components - Lead Content.

1.04 SUBMITTALS

A. See Section 013000 - Administrative Requirements for submittal procedures.

B. Product Data: Provide data on pipe materials, pipe fittings, valves, and accessories. Provide manufacturers catalog information. Indicate valve data and ratings.

1.05 QUALITY ASSURANCE

A. Perform work in accordance with applicable codes.

B. Valves: Manufacturer's name and pressure rating marked on valve body.

C. Welding Materials and Procedures: Comply with ASME BPVC-IX and applicable state labor regulations.

D. Welder Qualifications: Certified in accordance with ASME BPVC-IX.

E. Identify pipe with marking including size, ASTM material classification, ASTM specification, potable water certification, water pressure rating.

1.06 DELIVERY, STORAGE, AND HANDLING

A. Accept valves on site in shipping containers with labeling in place. Inspect for damage.

B. Provide temporary protective coating on cast iron and steel valves.

C. Provide temporary end caps and closures on piping and fittings. Maintain in place until installation.

D. Protect piping systems from entry of foreign materials by temporary covers, completing sections of the work, and isolating parts of completed system.

1.07 FIELD CONDITIONS

A. Do not install underground piping when bedding is wet or frozen.

PART 2 PRODUCTS

2.01 GENERAL REQUIREMENTS

A. Potable Water Supply Systems: Provide piping, pipe fittings, solder, and flux (if used), complying with NSF 61 and NSF 372; label pipe and fittings.

2.02 SANITARY SEWER AND VENT PIPING, BURIED WITHIN 5 FEET OF BUILDING

A. PVC Pipe: ASTM D2665 or ASTM D3034.
   1. Fittings: PVC.
   2. Joints: Solvent welded, with ASTM D2564 solvent cement.

2.03 SANITARY SEWER AND VENT PIPING, ABOVE GRADE

A. Cast Iron Pipe: CISPI 301, hubless, service weight.
   1. Fittings: Cast iron.
   2. Joints: CISPI 310, neoprene gaskets and stainless steel clamp-and-shield assemblies.

2.04 DOMESTIC WATER PIPING, BURIED WITHIN 5 FEET OF BUILDING

A. Copper Pipe: ASTM B42, hard drawn.
   1. Fittings: ASME B16.18, cast copper alloy or ASME B16.22 wrought copper and bronze.
   2. Joints: ASTM B 32, alloy Sn95 solder.

2.05 DOMESTIC WATER PIPING, ABOVE GRADE

A. Copper Tube: ASTM B88 (ASTM B88M), Type L (B), Drawn (H).

2.06 STORM DRAINAGE PIPING, BURIED WITHIN 5 FEET OF BUILDING

A. Cast Iron Pipe: CISPI 301, hubless, service weight.

1. Fittings: Cast iron.
2. Joints: Neoprene gaskets and stainless steel clamp-and-shield assemblies.

B. PVC Pipe: ASTM D2665 or ASTM D3034.
1. Fittings: PVC.
2. Joints: Solvent welded, with ASTM D2564 solvent cement.

2.07 STORM DRAINAGE PIPING, ABOVE GRADE

A. Cast Iron Pipe: CISPI 301, hubless, service weight.
1. Fittings: Cast iron.
2. Joints: Neoprene gaskets and stainless steel clamp-and-shield assemblies.

2.08 PIPE FLANGES, UNIONS, AND COUPLINGS

A. Unions for Pipe Sizes 3 inch and Under:
1. Ferrous Pipe: Class 150 malleable iron threaded unions.
2. Copper Tube and Pipe: Class 150 bronze unions with soldered joints.

B. Flanges for Pipe Sizes Over 1 inch:
1. Ferrous Pipe: Class 150 malleable iron threaded or forged steel slip-on flanges; preformed neoprene gaskets.
2. Copper Tube and Pipe: Class 150 slip-on bronze flanges; preformed neoprene gaskets.

C. Mechanical Couplings for Grooved and Shouldered Joints: Two or more curved housing segments with continuous key to engage pipe groove, circular C-profile gasket, and bolts to secure and compress gasket.
1. Dimensions and Testing: In accordance with AWWA C606.
2. Housing Material: Provide ASTM A47/A47M malleable iron, ductile iron, or _____, galvanized.
3. Gasket Material: EPDM suitable for operating temperature range from minus 30 degrees F to 230 degrees F.
4. Bolts and Nuts: Hot dipped galvanized or zinc-electroplated steel.
5. When pipe is field grooved, provide coupling manufacturer's grooving tools.

D. Dielectric Connections: Union with galvanized or plated steel threaded end, copper solder end, water impervious isolation barrier.

2.09 PIPE HANGERS AND SUPPORTS

A. Provide hangers and supports that comply with MSS SP-58.
1. If type of hanger or support for a particular situation is not indicated, select appropriate type using MSS SP-58 recommendations.
2. Overhead Supports: Individual steel rod hangers attached to structure or to trapeze hangers.
a. Cold and Hot Pipe Sizes 6 inch and Larger: Double hangers.
3. Trapeze Hangers: Welded steel channel frames attached to structure.
4. Vertical Pipe Support: Steel riser clamp.
5. Floor Supports: Concrete pier or steel pedestal with floor flange; fixture attachment.
6. Rooftop Supports for Low-Slope Roofs: Steel pedestals with bases that rest on top of roofing membrane, not requiring any attachment to the roof structure and not penetrating the roofing assembly, with support fixtures as specified; and as follows:
a. Bases: High-density polypropylene.
b. Base Sizes: As required to distribute load sufficiently to prevent indentation of roofing assembly.
c. Steel Components: Stainless steel or carbon steel hot-dip galvanized after fabrication in accordance with ASTM A123/A123M.
d. Attachment and Support Fixtures: As recommended by manufacturer, same type as indicated for equivalent indoor hangers and supports; corrosion-resistant material.
e. Height: Provide minimum clearance of 6 inches under pipe to top of roofing.

f. Manufacturers:
1) PHP Systems/Design; _____: www.phpsd.com/#sle.
2) Miro Industries, Inc.
3) Substitutions: See Section 016000 - Product Requirements.

B. Plumbing Piping - Drain, Waste, and Vent:
1. Hangers for Pipe Sizes 1/2 to 1-1/2 inch: Malleable iron, adjustable swivel, split ring.
2. Hangers for Pipe Sizes 2 inch and Over: Carbon steel, adjustable, clevis.
3. Wall Support for Pipe Sizes to 3 inch: Cast iron hook.
4. Wall Support for Pipe Sizes 4 inch and Over: Welded steel bracket and wrought steel clamp.
5. Floor Support: Cast iron adjustable pipe saddle, lock nut, nipple, floor flange, and concrete pier or steel support.
6. Copper Pipe Support: Carbon steel ring, adjustable, copper plated.

C. Plumbing Piping - Water:
1. Hangers for Pipe Sizes 1/2 to 1-1/2 inch: Malleable iron, adjustable swivel, split ring.
2. Hangers for Cold Pipe Sizes 2 inch and Over: Carbon steel, adjustable, clevis.
3. Hangers for Hot Pipe Sizes 2 to 4 inch: Carbon steel, adjustable, clevis.
4. Hangers for Hot Pipe Sizes 6 inch and Larger: Adjustable steel yoke, cast iron pipe roll, double hanger.
5. Wall Support for Pipe Sizes Up to 3 inch: Cast iron hook.
6. Wall Support for Pipe Sizes 4 inch and Larger: Welded steel bracket and wrought steel clamp.
7. Wall Support for Hot Pipe Sizes 6 inch and Larger: Welded steel bracket and wrought steel clamp with adjustable steel yoke and cast iron pipe roll.
8. Floor Support for Cold Pipe: Cast iron adjustable pipe saddle, lock nut, nipple, floor flange, and concrete pier or steel support.
9. Floor Support for Hot Pipe Sizes to 4 inch: Cast iron adjustable pipe saddle, locknut, nipple, floor flange, and concrete pier or steel support.
10. Floor Support for Hot Pipe Sizes 6 inch and Larger: Adjustable cast iron pipe roll and stand, steel screws, and concrete pier or steel support.
11. Copper Pipe Support: Carbon steel ring, adjustable, copper plated.

D. Hanger Fasteners: Attach hangers to structure using appropriate fasteners, as follows:

2.10 BALL VALVES

A. Manufacturers:
1. Grinnell Products, a Tyco Business: www.grinnell.com.
2. Nibco, Inc: www.nibco.com.
3. Uponor, Inc: www.uponorengineering.com/sle.
4. Substitutions: See Section 016000 - Product Requirements.

B. Construction, 4 inch and Smaller: MSS SP-110, Class 150, 400 psi CWP, bronze or ductile iron body, 304 stainless steel or chrome plated brass ball, regular port, teflon seats and stuffing box ring, blow-out proof stem, lever handle with balancing stops, threaded or grooved ends with union.

2.11 BUTTERFLY VALVES

A. Manufacturers:
1. Crane Company; _____: www.cranecpe.com/#sle.
2. Substitutions: See Section 016000 - Product Requirements.

B. Construction 1-1/2 inch and Larger: MSS SP-67, 200 psi CWP, cast or ductile iron body, nickel-plated ductile iron disc, resilient replaceable EPDM seat, wafer ends, extended neck, 10 position lever handle.

C. Provide gear operators for valves 8 inches and larger, and chain-wheel operators for valves mounted over 8 feet above floor.

2.12 FLOW CONTROLS

A. Construction: Class 125, Brass or bronze body with union on inlet and outlet, temperature and pressure test plug on inlet and outlet, blowdown/backflush drain.

B. Calibration: Control flow within 5 percent of selected rating, over operating pressure range of 10 times minimum pressure required for control, maximum minimum pressure 3.5 psi.

2.13 SWING CHECK VALVES

A. Up to 2 Inches:
   1. Class 125, bronze body and cap, bronze swing disc with rubber seat, solder ends.

B. Over 2 Inches:
   1. Class 125, iron body, bronze swing disc, renewable disc seal and seat, flanged or grooved ends.

2.14 SPRING LOADED CHECK VALVES

A. Class 125, iron body, bronze trim, stainless steel springs, bronze disc, Buna N seals, wafer style ends.

2.15 PRESSURE REDUCING VALVES

A. Manufacturers:
   1. Amtrol Inc: www.amtrol.com.
   2. Cla-Val Co: www.cla-val.com.
   3. Watts Regulator Company: www.wattsregulator.com.
   4. Substitutions: See Section 016000 - Product Requirements.

B. 2 inch and Smaller:
   1. ASSE 1003, bronze body, stainless steel, and thermoplastic internal parts, fabric reinforced diaphragm, strainer, threaded single union ends.
   2. Pressure Reducing Pilot-Operator:
      a. Operating Range: 5 to 50 psi.
      b. Connected into brass or bronze pilot piping and fittings.
      c. Fixed flow restrictor, pressure gauges, and isolation valves.

C. 2 inch and Larger:
   1. ASSE 1003, cast iron body with interior lining complying with AWWA C550, bronze fitted, elastomeric diaphragm and seat disc, flanged.
   2. Pressure Reducing Pilot-Operator:
      a. Operating Range: 5 to 50 psi.
      b. Connected into brass or bronze pilot piping and fittings.
      c. Fixed flow restrictor, strainer, pressure gauges, and isolation valves.

2.16 STRAINERS

A. Manufacturers:
   1. Armstrong International, Inc: www.armstronginternational.com.
   2. Green Country Filter Manufacturing: www.greencountryfilter.com.
   3. WEAMCO: www.weamco.com.
   4. Dearborn Brass: www.dearbornbrass.com.

B. Size 2 inch and Smaller:
   1. Threaded brass body for 175 psi CWP, Y pattern with 1/32 inch stainless steel perforated screen.
   2. Class 150, threaded bronze body 300 psi CWP, Y pattern with 1/32 inch stainless steel perforated screen.

C. Size 1-1/2 inch to 4 inch:

1. Class 125, flanged iron body, Y pattern with 1/16 inch stainless steel perforated screen.

D. Size 5 inch and Larger:
   1. Class 125, flanged iron body, basket pattern with 1/8 inch stainless steel perforated screen.

PART 3 EXECUTION

3.01 EXAMINATION

A. Verify that excavations are to required grade, dry, and not over-excavated.

3.02 PREPARATION

A. Ream pipe and tube ends. Remove burrs. Bevel plain end ferrous pipe.

B. Remove scale and dirt, on inside and outside, before assembly.

C. Prepare piping connections to equipment with flanges or unions.

3.03 INSTALLATION

A. Install in accordance with manufacturer's instructions.

B. Provide non-conducting dielectric connections wherever jointing dissimilar metals.

C. Route piping in orderly manner and maintain gradient. Route parallel and perpendicular to walls.

D. Install piping to maintain headroom, conserve space, and not interfere with use of space.

E. Group piping whenever practical at common elevations.

F. Install piping to allow for expansion and contraction without stressing pipe, joints, or connected equipment. See Section 220516.

G. Provide clearance in hangers and from structure and other equipment for installation of insulation and access to valves and fittings.

H. Provide access where valves and fittings are not exposed.

I. PVC Pipe: Make solvent-welded joints in accordance with ASTM D2855.

J. Sleeve pipes passing through partitions, walls, and floors.

K. Inserts:
   1. Provide inserts for placement in concrete formwork.
   2. Provide inserts for suspending hangers from reinforced concrete slabs and sides of reinforced concrete beams.
   3. Provide hooked rod to concrete reinforcement section for inserts carrying pipe over 4 inches.
   4. Where concrete slabs form finished ceiling, locate inserts flush with slab surface.
   5. Where inserts are omitted, drill through concrete slab from below and provide through-bolt with recessed square steel plate and nut above slab.

L. Pipe Hangers and Supports:
   1. Install in accordance with ASME B31.9.
   2. Support horizontal piping as indicated.
   3. Install hangers to provide minimum 1/2 inch space between finished covering and adjacent work.
   4. Place hangers within 12 inches of each horizontal elbow.
   5. Use hangers with 1-1/2 inch minimum vertical adjustment. Design hangers for pipe movement without disengagement of supported pipe.
   6. Support vertical piping at every other floor. Support riser piping independently of connected horizontal piping.
   7. Where several pipes can be installed in parallel and at same elevation, provide multiple or trapeze hangers.
   8. Provide copper plated hangers and supports for copper piping.

9. Prime coat exposed steel hangers and supports. Hangers and supports located in crawl spaces, pipe shafts, and suspended ceiling spaces are not considered exposed.
10. Provide hangers adjacent to motor-driven equipment with vibration isolation; see Section 220548.
11. Support cast iron drainage piping at every joint.

M. When installing more than one piping system material, ensure system components are compatible and joined to ensure the integrity of the system. Provide necessary joining fittings. Ensure flanges, union, and couplings for servicing are consistently provided.

3.04 APPLICATION

A. Use grooved mechanical couplings and fasteners only in accessible locations.

B. Install unions downstream of valves and at equipment or apparatus connections.

C. Install brass male adapters each side of valves in copper piped system. Solder adapters to pipe.

D. Install globe valves for throttling, bypass, or manual flow control services.

E. Provide lug end butterfly valves adjacent to equipment when provided to isolate equipment.

F. Provide spring-loaded check valves on discharge of water pumps.

G. Provide flow controls in water recirculating systems where indicated.

3.05 TOLERANCES

A. Drainage Piping: Establish invert elevations within 1/2 inch vertically of location indicated and slope to drain at minimum of 1/8 inch per foot slope.

B. Water Piping: Slope at minimum of 1/32 inch per foot and arrange to drain at low points.

3.06 DISINFECTION OF DOMESTIC WATER PIPING SYSTEM

A. Disinfect water distribution system in accordance with Section 330110.58.

B. Prior to starting work, verify system is complete, flushed, and clean.

C. Ensure acidity (pH) of water to be treated is between 7.4 and 7.6 by adding alkali (caustic soda or soda ash) or acid (hydrochloric).

D. Inject disinfectant, free chlorine in liquid, powder, tablet, or gas form throughout system to obtain 50 to 80 mg/L residual.

E. Bleed water from outlets to ensure distribution and test for disinfectant residual at minimum 15 percent of outlets.

F. Maintain disinfectant in system for 24 hours.

G. If final disinfectant residual tests less than 25 mg/L, repeat treatment.

H. Flush disinfectant from system until residual equal to that of incoming water or 1.0 mg/L.

I. Take samples no sooner than 24 hours after flushing, from 10 percent of outlets and from water entry, and analyze in accordance with AWWA C651.

3.07 SERVICE CONNECTIONS

A. Provide new sanitary sewer services. Before commencing work, check invert elevations required for sewer connections, confirm inverts and ensure that these can be properly connected with slope for drainage and cover to avoid freezing.

B. Provide new water service complete with approved reduced pressure backflow preventer and water meter with by-pass valves, pressure reducing valve, and sand strainer.
1. Provide sleeve in wall for service main and support at wall with reinforced concrete bridge. Calk enlarged sleeve and make watertight with pliable material. Anchor service main inside to concrete wall.

2. Provide 18 gauge, 0.0478-inch galvanized sheet metal sleeve around service main to 6 inch above floor and 6 feet minimum below grade. Size for minimum of 2 inches of loose batt insulation stuffing.

3.08 SCHEDULES

A. Pipe Hanger Spacing:
   1. Metal Piping:
      a. Pipe Size: 1/2 inch to 1-1/4 inch:
         1) Maximum Hanger Spacing: 6.5 ft.
         2) Hanger Rod Diameter: 3/8 inches.
      b. Pipe Size: 1-1/2 inch to 2 inch:
         1) Maximum Hanger Spacing: 10 ft.
         2) Hanger Rod Diameter: 3/8 inch.
      c. Pipe Size: 2-1/2 inch to 3 inch:
         1) Maximum Hanger Spacing: 10 ft.
         2) Hanger Rod Diameter: 1/2 inch.
      d. Pipe Size: 4 inch to 6 inch:
         1) Maximum Hanger Spacing: 10 ft.
         2) Hanger Rod Diameter: 5/8 inch.
      e. Pipe Size: 8 inch to 12 inch:
         1) Maximum hanger spacing: 14 ft.
         2) Hanger Rod Diameter: 7/8 inch.
      f. Pipe Size: 14 inch and Over:
         1) Maximum Hanger Spacing: 20 ft.
         2) Hanger Rod Diameter: 1 inch.
   2. Plastic Piping:
      a. All Sizes:
         1) Maximum Hanger Spacing: 6 ft.
         2) Hanger Rod Diameter: 3/8 inch.

END OF SECTION 221005

SECTION 221006
PLUMBING PIPING SPECIALTIES

PART 1 GENERAL

1.01 SECTION INCLUDES

A. Drains.
B. Cleanouts.
C. Hose bibbs.
D. Hydrants.
E. Washing machine boxes and valves.
F. Refrigerator valve and recessed box.
G. Backwater valves.
H. Backflow preventers.
I. Double check valve assemblies.
J. Water hammer arrestors.
K. Sumps and interceptors.
L. Mixing valves.

1.02 RELATED REQUIREMENTS

A. Section 011000 - Summary: Product requirements for Owner furnished kitchen equipment.
B. Section 016000 - Product Requirements: Procedures for Owner-supplied products.
C. Section 221005 - Plumbing Piping.

1.03 REFERENCE STANDARDS

A. ADA Standards - 2010 ADA Standards for Accessible Design.
B. ASME A112.6.4 - Roof, Deck, and Balcony Drains.
C. ASSE 1011 - Performance Requirements for Hose Connection Vacuum Breakers.
D. ASSE 1012 - Performance Requirements for Backflow Preventers with an Intermediate Atmospheric Vent.
E. ASSE 1013 - Reduced Pressure Principle (RP) Backflow Prevention Assemblies.
F. ASSE 1019 - Performance Requirements for Wall Hydrant with Backflow Protection and Freeze Resistance.
G. DIN 19580 - Drainage Channels for Vehicular and Pedestrian Areas - Durability, Mass Per Unit Area and Evaluation of Conformity.
H. NSF 61 - Drinking Water System Components - Health Effects.
I. NSF 372 - Drinking Water System Components - Lead Content.
J. PDI-WH 201 - Water Hammer Arresters.

1.04 SUBMITTALS

A. See Section 013000 - Administrative Requirements for submittal procedures.
B. Product Data: Provide component sizes, rough-in requirements, service sizes, and finishes.
C. Operation Data: Indicate frequency of treatment required for interceptors.

1.05 DELIVERY, STORAGE, AND HANDLING

A. Accept specialties on site in original factory packaging. Inspect for damage.

PART 2 PRODUCTS

2.01 GENERAL REQUIREMENTS

A. Specialties in Potable Water Supply Systems: Provide products that comply with NSF 61 and NSF 372 for maximum lead content.

2.02 DRAINS

A. Manufacturers:
   1. Jay R. Smith Manufacturing Company: www.jayrsmith.com.
   2. Josam Company: designed full flow.
   3. Noble Company: www.noblecompany.com.
   4. Zurn Industries, LLC: www.zurn.com.
   5. Wade; www.wadedrains.com.
   6. Mifab; www.mifab.com.

B. Floor Drains:

C. Floor Drain Accessory
   1. Inline Floor Drain Trap Sealer
      a. Manufacturer: Rector Seal; http://www.rectorseal.com/index.php/sureseal/
      b. Model: SureSeal
      c. Size: Match floor drain trap size.
      d. Performance: Certified to ASSE 1072 for use in any floor drain at any location.

2.03 CLEANOUTS

A. Manufacturers:
   1. Jay R. Smith Manufacturing Company: www.jayrsmith.com.
   2. Josam Company: www.josam.com.
   3. Zurn Industries, Inc: www.zurn.com.
   4. Wade; www.wade.com.
   5. Substitutions: See Section 016000 - Product Requirements.

2.04 HOSE BIBBS

A. Manufacturers:
   1. Jay R. Smith Manufacturing Company: www.jayrsmith.com.
   2. Watts Regulator Company: www.wattsregulator.com.
   3. Zurn Industries, LLC: www.zurn.com.

B. Interior Hose Bibbs:
   1. Bronze or brass with integral mounting flange, replaceable hexagonal disc, hose thread spout, chrome-plated where exposed with handwheel, integral vacuum breaker in compliance with ASSE 1011.

2.05 HYDRANTS

A. Manufacturers:
   1. Jay R. Smith Manufacturing Company: www.jayrsmith.com.
   2. Zurn Industries, LLC: www.zurn.com.

B. Wall Hydrants:
   1. ASSE 1019; freeze resistant, self-draining type with chrome-plated wall plate hose thread spout, handwheel, and integral vacuum breaker.

C. Floor Hydrants:
   1. ASSE 1019; chrome-plated lockable recessed box, hose thread spout, lockshield and removable key, and vacuum breaker.

D. Post Roof Hydrants:
   1. Exposed, non-freeze.

2. Coated cast iron head and lift handle withlock option, galvanized steel casing, bronze and stainless steel interior components.
3. 3/4" inlet connection with 1/8" tapped drain port on housing, adapter vacumm breaker, and 3/4" male hose connection.
4. Coated cast iron roof support sleeve with wide anchoring flange and clamp collar.

2.06 WASHING MACHINE BOXES AND VALVES

A. Box Manufacturers:
1. IPS Corporation/Water-Tite: www.ipscorp.com.
2. Oatey Supply Chain Services, Inc: www.oatey.com.
3. Substitutions: See Section 016000 - Product Requirements.

B. Valve Manufacturers:
1. IPS Corporation/Water-Tite: www.ipscorp.com.
2. Zurn Industries, LLC: www.zurn.com.
3. Substitutions: See Section 016000 - Product Requirements.

C. Description: Plastic preformed rough-in box with brass long shank valves with wheel handles, socket for 2 inch waste, slip in finishing cover.

2.07 REFRIGERATOR VALVE AND RECESSED BOX

A. Box Manufacturers:
1. IPS Corporation/Water-Tite: www.ipscorp.com.
2. Oatey Supply Chain Services, Inc: www.oatey.com.
3. Substitutions: See Section 016000 - Product Requirements.

B. Valve Manufacturers:
1. IPS Corporation/Water-Tite: www.ipscorp.com.
2. Zurn Industries, LLC: www.zurn.com.
3. Substitutions: See Section 016000 - Product Requirements.

C. Description: Plastic preformed rough-in box with brass valves with wheel handle, slip in finishing cover.

2.08 BACKWATER VALVES

A. Manufacturers:
1. Jay R. Smith Manufacturing Company: www.jayrsmith.com.
2. Zurn Industries, LLC: www.zurn.com.
3. Substitutions: See Section 016000 - Product Requirements.
4. Watts Regulator Company[<>]: www.wattsregulator.com.

B. Cast Iron Backwater Valves: ASME A112.6.4; lacquered cast iron body and cover, brass valve, extension sleeve, and access cover.

2.09 BACKFLOW PREVENTERS

A. Reduced Pressure Backflow Preventer Assembly:
1. ASSE 1013; cast bronze body and stainless steel springs; two independently operating, spring loaded check valves; diaphragm type differential pressure relief valve located between check valves; third check valve that opens under back pressure in case of diaphragm failure, and non-threaded vent outlet.
2. Size: _____ inch assembly with threaded gate valves.

2.10 DOUBLE CHECK-VALVE ASSEMBLIES

A. Double Check Valve Assembly:
1. ASSE 1012; cast bronze body with corrosion resistant internal parts and stainless steel springs; two independently operating check valves with intermediate atmospheric vent.
2. Size: 3/4 to 2 inch, NPS assembly with threaded full port ball valves.

2.11 WATER HAMMER ARRESTORS

A. Manufacturers:
   1. Jay R. Smith Manufacturing Company: www.jayrsmith.com.
   2. Watts Regulator Company, a part of Watts Water Technologies: www.wattsregulator.com.
   3. Zurn Industries, LLC: www.zurn.com.
   4. Substitutions: See Section 016000 - Product Requirements.

B. Water Hammer Arrestors:
   1. Stainless steel construction, bellows type sized in accordance with PDI-WH 201, precharged suitable for operation in temperature range minus 100 to 300 degrees F and maximum 250 psi working pressure.

2.12 MIXING VALVES

A. Thermostatic Mixing Valves:
   1. Manufacturers:
      a. ESBE: www.esbe.se/en.
      b. Watts: Watts.com.
      c. Leonard Valve Company: www.leonardvalve.com.
   2. Valve: Chrome-plated cast brass body, stainless steel or copper alloy bellows, integral temperature adjustment.
   3. Capacity: refer to drawing.
   4. Accessories:
      a. Check valve on inlets.
      b. Volume control shut-off valve on outlet.
      c. Stem thermometer on outlet.
      d. Strainer stop checks on inlets.
   5. Cabinet: 16 gauge, 0.0598 inch prime-coated steel, for recessed mounting with keyed lock.

B. Pressure Balanced Mixing Valves:
   1. Manufacturers:
      a. Delta Faucet Company: www.deltafaucet.com.
      b. Tacotherm Ltd: www.tacotherm.co.uk.
      c. _____.
      d. Substitutions: See Section 016000 - Product Requirements.
   2. Capacity: refer to drawing.
   3. Accessories:
      a. Volume control shut-off valve on outlet.
      b. Stem thermometer on outlet.
      c. Strainer stop checks on inlets.
      d. Cabinet: 16 gauge, 0.0598 inch prime-coated steel, for recessed mounting with keyed lock.

PART 3 EXECUTION

3.01 INSTALLATION

A. Install in accordance with manufacturer's instructions.

B. Extend cleanouts to finished floor or wall surface. Lubricate threaded cleanout plugs with mixture of graphite and linseed oil. Ensure clearance at cleanout for rodding of drainage system.

C. Encase exterior cleanouts in concrete flush with grade.

D. Install floor cleanouts at elevation to accommodate finished floor.

E. Install approved potable water protection devices on plumbing lines where contamination of domestic water may occur; on boiler feed water lines, janitor rooms, fire sprinkler systems, premise isolation, irrigation systems, flush valves, interior and exterior hose bibbs.

F. Pipe relief from backflow preventer to nearest drain.

G. Install water hammer arrestors complete with accessible isolation valve on hot and cold water supply piping to lavatories sinks and washing machine outlets as applicable.

H. Install air chambers on hot and cold water supply piping to each fixture or group of fixtures (each washroom). Fabricate same size as supply pipe or 3/4 inch minimum, and minimum 18 inches long.

END OF SECTION 221006

SECTION 224000
PLUMBING FIXTURES

PART 1 GENERAL

1.01 SECTION INCLUDES

A. Flush valve water closets.

B. Wall hung urinals.

C. Lavatories.

D. Wall-hung, solid surface, multistation lavatory units.

E. Sinks.

F. Under-lavatory pipe supply covers.

G. Mop sinks.

H. Service sinks.

1.02 RELATED REQUIREMENTS

A. Section 221005 - Plumbing Piping.

B. Section 221119 - Domestic Water Piping Specialties.

1.03 REFERENCE STANDARDS

A. ADA Standards - 2010 ADA Standards for Accessible Design.

B. ASME A112.6.1M - Floor-Affixed Supports for Off-the-Floor Plumbing Fixtures for Public Use.

C. ASME A112.18.1 - Plumbing Supply Fittings.

D. ASME A112.18.9 - Protectors/Insulators for Exposed Waste and Supplies on Accessible Fixtures.

E. ASME A112.19.2 - Ceramic Plumbing Fixtures.

F. ASSE 1070 - Performance Requirements for Water Temperature Limiting Devices.

G. ASTM E84 - Standard Test Method for Surface Burning Characteristics of Building Materials.

H. ICC A117.1 - Accessible and Usable Buildings and Facilities.

I. NSF 61 - Drinking Water System Components - Health Effects.

J. NSF 372 - Drinking Water System Components - Lead Content.

1.04 SUBMITTALS

A. See Section 013000 - Administrative Requirements for submittal procedures.

B. Product Data: Provide manufacturer's literature and data sheets for each product. Include materials of fabrication, rough-in requirements, location and sizes of connections, configurations, dimensions, finishes, features, and accessories.

C. Maintenance Data: Include fixture trim exploded view and replacement parts lists.

D. Test Results: Provide test results for lead content for all potable water sources where water may be consumed from new fixtures.

1.05 REGULATORY REQUIREMENTS

A. Potable water systems must adhere to the State of Missouri "Get the Lead Out of School Drinking Water Act" per RSMo 160.077.

1.06 DELIVERY, STORAGE, AND HANDLING

A. Accept fixtures on-site in factory packaging. Inspect for damage.

B. Protect installed fixtures from damage by securing areas and by leaving factory packaging in place to protect fixtures and prevent use.

PART 2 PRODUCTS

2.01 GENERAL REQUIREMENTS

A. ADA: Where indicated to be ADA-compliant, provide fixtures complying with ADA Standards and ICC A117.1.

B. Water Efficiency: EPA WaterSense label is required for all water closets, urinals, and lavatory faucets.

2.02 FLUSH VALVE WATER CLOSETS

A. Water Closets:
   1. Vitreous china, ASME A112.19.2, floor mounted, siphon jet flush action, china bolt caps.
   2. Flush Valve: Exposed (top spud).1.6 gallon.
   3. Flush Operation: Manual, oscillating handle.
   4. Handle Height: 44 inches or less.

B. Flush Valves:
   1. Manufacturers:
      a. Sloan Valve Company Model; XL Regal #111: www.sloanvalve.com/#sle.
      b. Substitutions: Not permitted.

2.03 WALL HUNG URINALS (LOW WATER FLOW)

A. Vitreous china, ASME A112.19.2, wall hung with side shields and concealed carrier.
   1. Flush Volume: 0.1 to 0.8 gpf.
   2. Flush Valve: Exposed (top spud).
   3. Flush Operation: Sensor operated.
   4. Trapway Outlet: Integral.
   5. Outlet Size and Location: 2 inches, bottom side.

2.04 LAVATORIES

A. Wall-Hung Basin:
   1. Vitreous China: ASME A112.19.2; white, rectangular basin with splash lip, front overflow, soap depression, and hanger. Size as indicated on drawings with 4-inch centerset spacing.

B. Supply Faucet: ASME A112.18.1; chrome plated combination supply fitting with open grid strainer, water economy aerator with maximum flow of 0.5 gallon per minute (low-flow), hot and cold lever handles.

C. Thermostatic Mixing Valve:
   1. ASSE 1070 water temperature limiting valve.
   2. See Section 221119 for mixing valve specifications.

D. Accessories:
   1. Chrome-plated 17 gauge, 0.0538 inch brass P-trap with clean-out plug and arm with escutcheon.
   2. Chrome plated P-trap with clean-out plug and arm with escutcheon.
   3. Trap and waster arm insulated and offset to meet ADA compliance.

E. Lavatory Carrier:
   1. ASME A112.6.1M; cast iron and steel frame with tubular legs, lugs for floor and wall attachment, threaded studs for fixture hanger, bearing plate and studs.
   2. Lavatory Insulation Kit (for ADA Lavatory, see drawing for applicable locations)
      a. Manufacturers:
         1) Plumberex.
         2) Truebro.
         3) Substitutions: Section 01600 - Product Requirements.

b. Product Description: Safety Covers conforming to ANSI A177.1 and consisting of insulation kit of molded closed cell vinyl construction, 3/16 inch thick, white color, for insulating tailpiece, P-trap, valves, and supply piping. Furnish with weep hole and angle valve access covers.

2.05 SINKS

A. Manufacturers:
   1. Elkay Manufacturing Co.: www.elkay.com

B. Single Compartment Bowl: ASME A112.19.3; 20 gage thick, Type 304 stainless steel, self rimming and undercoated, with ledge back drilled for trim.
   1. Bowl Size: See schedule on drawing.
   2. Offset drain outlet for ADA compliance.
   3. Holes: 3-hole for 8" on center faucet.
   4. Depth: See schedule on drawing.

C. Accessories: Chrome plated, stainless steel P-trap with clean-out plug; screwdriver stop and arm with escutcheon, flexible supplies

D. Sink Faucet Without Side Sprayer: ASME A112.18.1; chrome plated brass construction with 9" arm, swing spout, water economy aerator, indexed lever handles with hot and cold color indicators, rotate the hot side handle in a counterclockwise manner to open and the cold side handle in clockwise to open. 8" on center.
   1. Swing spout:
      a. Elementary School Application (Student Use): 120 degree swing.
      b. Other Than Elementary School Application: 360 degree swing.
   2. Aerator maximum flow:
      a. Health Area and Regular Classroom Application: 1 gpm
      b. Staff Break Room Application: 1.6 gpm
   3. Manufacturers:
      a. Chicago Faucets, Model 1100 - E35 CP
      b. Substitutions: Not permitted

2.06 UNDER-LAVATORY PIPE SUPPLY COVERS

A. General:
   1. Insulate exposed drainage piping including hot, cold and tempered water supplies under lavatories or sinks per ADA Standards.
   2. Construction: 1/8 inch PVC with antimicrobial, antifungal and UV resistant properties.
      a. Comply with ASME A112.18.9 for covers on accessible lavatory piping.
      b. Comply with ICC A117.1.

2.07 ADA SHOWERS

A. Manufacturers:

B. Low-Flow Shower Head:
   1. ASME A112.18.1; chrome-plated vandal-proof institutional head with integral wall bracket, built-in 1.5 gpm flow control.

2.08 ELECTRIC WATER COOLERS WITH BOTTLE FILLER

A. Water Cooler: Electric, mechanically refrigerated; surface mounted, ADA compliant; stainless steel top, vinyl on steel body, elevated anti-squirt bubbler with stream guard, automatic stream regulator, push button, mounting bracket; integral air cooled condenser and stainless steel grille.
   1. Capacity: 8 gph of 50 degrees F water with inlet at 80 degrees F and room temperature of 90 degrees F, when tested in accordance with ASHRAE Std 18.
   2. Electrical: 115 VAC, 60 Hertz compressor, 6 foot cord and plug for connection to electric wiring system including grounding connector.

B. Bottle Filler: Materials to match fountain.

2.09 SERVICE SINKS

A. Bowl: 24 by 24 by 10 inch high white molded stone, floor mounted, with one inch wide shoulders, vinyl bumper guard, stainless steel strainer.

PART 3 EXECUTION

3.01 EXAMINATION

A. Verify walls, floors, and finishes are prepared and ready for installation of fixtures.

B. Verify rough-ins for field connections match sizes and locations shown on drawings.

C. Verify electric power is available and of the correct characteristics.

D. Verify casework and countertops are prepared and ready for installation of fixtures.

3.02 INSTALLATION

A. Install products in accordance with manufacturer's instructions.

B. Install components level and plumb.

C. Secure fixtures in place.

D. Install rigid or flexible supplies to fixtures. Provide supply stops, reducers, and escutcheons.

3.03 ADJUSTING

3.04 TESTING

A. Perform independent testing, using the Owner's Third Party Consultant for Lead in Drinking Water for lead content on all potable water sources from new fixtures where water may be consumed. Submit test results and certification that lead content is acceptable in meeting the State of Missouri Get the Lead Out of School Drinking Water Act.

3.05 CLEANING

A. See Section 017000 - Execution and Closeout Requirements for additional requirements.

B. Clean plumbing fixtures to remove dirt, fingerprints, paint, or other foreign material and restore finishes to match original factory finish.

3.06 PROTECTION

A. Protect installed products from damage due to subsequent construction operations.

B. Do not permit use of fixtures by construction personnel.

3.07 SCHEDULES

A. Fixture Heights: Install fixtures to heights above finished floor as indicated on drawings.

B. Fixture Rough-In: As scheduled on drawings

END OF SECTION 224000

SECTION 230529
HANGERS AND SUPPORTS FOR HVAC PIPING AND EQUIPMENT

PART 1 GENERAL

1.01 SECTION INCLUDES

A. Support and attachment components.

1.02 RELATED REQUIREMENTS

A. Section 033000 - Cast-in-Place Concrete: Concrete equipment pads.

1.03 REFERENCE STANDARDS

A. ASTM A36/A36M - Standard Specification for Carbon Structural Steel.

B. ASTM A47/A47M - Standard Specification for Ferritic Malleable Iron Castings.

C. ASTM A123/A123M - Standard Specification for Zinc (Hot-Dip Galvanized) Coatings on Iron and Steel Products.

D. ASTM A153/A153M - Standard Specification for Zinc Coating (Hot-Dip) on Iron and Steel Hardware.

E. ASTM A181/A181M - Standard Specification for Carbon Steel Forgings, for General-Purpose Piping.

F. ASTM A283/A283M - Standard Specification for Low and Intermediate Tensile Strength Carbon Steel Plates.

G. ASTM A395/A395M - Standard Specification for Ferritic Ductile Iron Pressure-Retaining Castings for Use at Elevated Temperatures.

H. ASTM A653/A653M - Standard Specification for Steel Sheet, Zinc-Coated (Galvanized) or Zinc-Iron Alloy-Coated (Galvannealed) by the Hot-Dip Process.

I. ASTM A1011/A1011M - Standard Specification for Steel, Sheet and Strip, Hot-Rolled, Carbon, Structural, High-Strength Low-Alloy, High-Strength Low-Alloy with Improved Formability, and Ultra-High Strength.

J. ASTM B633 - Standard Specification for Electrodeposited Coatings of Zinc on Iron and Steel.

K. ASTM E84 - Standard Test Method for Surface Burning Characteristics of Building Materials.

L. ASTM E96/E96M - Standard Test Methods for Gravimetric Determination of Water Vapor Transmission Rate of Materials.

M. FM (AG) - FM Approval Guide.

N. MFMA-4 - Metal Framing Standards Publication.

O. MSS SP-58 - Pipe Hangers and Supports - Materials, Design, Manufacture, Selection, Application, and Installation.

P. UL (DIR) - Online Certifications Directory.

Q. UL 723 - Standard for Test for Surface Burning Characteristics of Building Materials.

1.04 ADMINISTRATIVE REQUIREMENTS

A. Coordination:
   1. Coordinate sizes and arrangement of supports and bases with the actual equipment and components to be installed.
   2. Coordinate the work with other trades to provide additional framing and materials required for installation.
   3. Coordinate compatibility of support and attachment components with mounting surfaces at the installed locations.

4. Coordinate the arrangement of supports with ductwork, piping, equipment and other potential conflicts installed under other sections or by others.
5. Notify Architect of any conflicts with or deviations from Contract Documents. Obtain direction before proceeding with work.

B. Sequencing:
1. Do not install products on or provide attachment to concrete surfaces until concrete has fully cured in accordance with Section 033000.

PART 2 PRODUCTS

2.01 SUPPORT AND ATTACHMENT COMPONENTS

A. General Requirements:
1. Provide all required hangers, supports, anchors, fasteners, fittings, accessories, and hardware as necessary for the complete installation of plumbing work.
2. Provide products listed, classified, and labeled as suitable for the purpose intended, where applicable.
3. Where support and attachment component types and sizes are not indicated, select in accordance with manufacturer's application criteria as required for the load to be supported with a minimum safety factor of _____. Include consideration for vibration, equipment operation, and shock loads where applicable.
4. Steel Components: Use corrosion resistant materials suitable for the environment where installed.
a. Zinc-Plated Steel: Electroplated in accordance with ASTM B633.
b. Galvanized Steel: Hot-dip galvanized after fabrication in accordance with ASTM A123/A123M or ASTM A153/A153M.

B. Prefabricated Trapeze-Framed Metal Strut Systems:
1. Strut Channel or Bracket Material:
2. Accessories: Provide bracket covers, cable basket clips, cable tray clips, clamps, conduit clamps, fire-retarding brackets, j-hooks, protectors, and vibration dampeners.

C. Hanger Rods:
1. Threaded zinc-plated steel unless otherwise indicated.
2. Minimum Size, Unless Otherwise Indicated or Required:
a. Equipment Supports: 1/2 inch diameter.
b. Piping up to 1 inch: 1/4 inch diameter.
c. Piping larger than 1 inch: 3/8 inch diameter.
d. Trapeze Support for Multiple Pipes: 3/8 inch diameter.

D. Thermal Insulated Pipe Supports:
1. General Requirements:
a. Insulated pipe supports to be provided at hanger, support, and guide locations on pipe requiring insulation or additional support.
b. Surface Burning Characteristics: Flame spread index/smoke developed index of 5/30, maximum, when tested in accordance with ASTM E84 or UL 723.
c. Pipe supports to be provided for nominally sized, 1/2 to 30 inch iron pipes.
d. Insulation inserts to consist of rigid polyisocyanurate (urethane) insulation surrounded by a 360 degree, PVC jacketing.
2. PVC Jacket:
a. Pipe insulation protection shields to be provided with a ball bearing hinge and locking seam.
b. Moisture Vapor Transmission: 0.0071 perm inch, when tested in accordance with ASTM E96/E96M.
c. Thickness: 60 mil.

E. Pipe Supports:

1. Material: ASTM A395/A395M ductile iron, ASTM A36/A36M carbon steel, ASTM A47/A47M malleable iron, ASTM A181/A181M forged steel, or ASTM A283/A283M steel.
2. Liquid Temperatures Up To 122 degrees F:
   a. Overhead Support: MSS SP-58 Types 1, 3 through 12.
   b. Support From Below: MSS SP-58 Types 35 through 38.

F. Beam Clamps:
1. MSS SP-58 types 19 through 23, 25 or 27 through 30 based on required load.
2. Beam C-Clamp: MSS SP-58 type 23, malleable iron and steel with plain, stainless steel, and zinc finish.
3. Small or Junior Beam Clamp: MSS SP-58 type 19, malleable iron with plain finish. For inverted usage provide manufacturer listed size(s).
4. Wide Mouth Beam Clamp: MSS SP-58 type 19, malleable iron with plain finish.
5. Centerload Beam Clamp with Extension Piece: MSS SP-58 type 30, malleable iron with plain finish.
6. FM (AG) and UL (DIR) Approved Beam Clamp: MSS SP-58 type 19, plain finish,
7. Provide clamps with hardened steel cup-point set screws and lock-nuts for anchoring in place.
8. Material: ASTM A395/A395M ductile iron, ASTM A36/A36M carbon steel, ASTM A47/A47M malleable iron, ASTM A181/A181M forged steel, or ASTM A283/A283M steel.

G. Riser Clamps:
1. For insulated pipe runs, provide two bolt-type clamps designed for installation under insulation.
2. MSS SP-58 type 1 or 8, carbon steel or steel with epoxy plated, plain, stainless steel, or zinc plated finish.
3. Medium Split Horizontal Pipe Clamp: MSS SP-58 type 4, carbon steel or stainless steel with epoxy plated, plain, stainless steel, or zinc plated finish.
4. Copper Tube Pipe Clamp: MSS SP-58 type 8, epoxy plated copper.
5. UL (DIR) listed: Pipe sizes 1/2 to 8 inch.

H. U-Bolts:
1. MSS SP-58 Type 24, carbon steel u-bolt for pipe support or anchoring.

I. Offset Pipe Clamps: Double-leg design two-piece pipe clamp.

J. Strut Clamps:
1. Pipe Clamp: Two-piece rigid, universal, or outer diameter type, carbon steel with epoxy copper or zinc finish.

K. Pipe Hangers:
1. Split Ring Hangers:
   a. Provide hinged split ring and yoke roller hanger with epoxy copper or plain finish.
   b. Material: ASTM A47/A47M malleable iron or ASTM A36/A36M carbon steel.
   c. Provide hanger rod and nuts of the same type and material for a given pipe run.
   d. Provide coated or plated hangers to isolate steel hangers from dissimilar metal tube or pipe.
2. Band Hangers, Adjustable:
   a. MSS SP-58 Type 7 or 9, Zinc-plated ASTM A1011/A1011M steel or ASTM A653/A653M carbon steel.
3. Clevis Hangers, Adjustable:
   a. Copper Tube: MSS SP-58 Type 1, epoxy-plated copper.

L. Pipe Shields for Insulated Piping:
1. General Construction and Requirements:
   a. Surface Burning Characteristics: Comply with ASTM E84 or UL 723.
   b. Shields Material: UV-resistant polypropylene with glass fill.

c. Maximum Insulated Pipe Outer Diameter: 12-5/8 inch.
d. Minimum Service Temperature: Minus 40 degrees F.
e. Maximum Service Temperature: 178 degrees F.
f. Pipe shields to be provided at hanger, support, and guide locations on pipe requiring insulation or additional support.

M. Anchors and Fasteners:
1. Unless otherwise indicated and where not otherwise restricted, use the anchor and fastener types indicated for the specified applications.
2. Concrete: Use preset concrete inserts, expansion anchors, or screw anchors.
3. Solid or Grout-Filled Masonry: Use expansion anchors or screw anchors.
4. Hollow Masonry: Use toggle bolts.
5. Hollow Stud Walls: Use toggle bolts.
6. Steel: Use beam-ceiling clamps, beam clamps, machine bolts, or welded threaded studs.
7. Plastic and lead anchors are not permitted.
8. Preset Concrete Inserts: Continuous metal channel (strut) and spot inserts specifically designed to be cast in concrete ceilings, walls, and floors.
a. Comply with MFMA-4.
b. Channel Material: Use galvanized steel.
c. Manufacturer: Same as manufacturer of metal channel (strut) framing system.

N. Pipe Installation Accessories:
1. Seismic Bracing Hardware:
a. Cable Suspension Systems:
1) Strut channel or bracket-fitted fitting with locking mechanism for pipe or equipment suspension using cable wires extended to surface-mounted end-fixing fittings.
2) Provide cable wire and end-fixing as required to hold minimum weight of 120 lb.
b. Cable Sway Bracing Systems:
1) Cable wire hanger with fix and release spring mechanism enclosed using zinc housing with 302 stainless steel components for pipe or equipment suspension to surface-mounted end-fixing fittings.
2) Provide cable wire and end-fixing as required to hold minimum weight of 25 lb.

PART 3 EXECUTION

3.01 INSTALLATION

A. Install products in accordance with manufacturer's instructions.

B. Provide independent support from building structure. Do not provide support from piping, ductwork, conduit, or other systems.

C. Unless specifically indicated or approved by Architect, do not provide support from suspended ceiling support system or ceiling grid.

D. Unless specifically indicated or approved by Architect, do not provide support from roof deck.

E. Do not penetrate or otherwise notch or cut structural members without approval of Structural Engineer.

F. Provide thermal insulated pipe supports complete with hangers and accessories. Install thermal insulated pipe supports during the installation of the piping system.

G. Equipment Support and Attachment:
1. Use metal fabricated supports or supports assembled from metal channel (strut) to support equipment as required.
2. Use metal channel (strut) secured to studs to support equipment surface-mounted on hollow stud walls when wall strength is not sufficient to resist pull-out.

3. Use metal channel (strut) to support surface-mounted equipment in wet or damp locations to provide space between equipment and mounting surface.
4. Securely fasten floor-mounted equipment. Do not install equipment such that it relies on its own weight for support.

H. Preset Concrete Inserts: Use manufacturer-provided closure strips to inhibit concrete seepage during concrete pour.

I. Secure fasteners according to manufacturer's recommended torque settings.

J. Remove temporary supports.

END OF SECTION 230529

SECTION 230548
VIBRATION AND SEISMIC CONTROLS FOR HVAC

PART 1 GENERAL

1.01 SECTION INCLUDES

A. External seismic snubber assemblies.

1.02 RELATED REQUIREMENTS

1.03 REFERENCE STANDARDS

A. ASCE 7 - Minimum Design Loads and Associated Criteria for Buildings and Other Structures.

B. ASHRAE (HVACA) - ASHRAE Handbook - HVAC Applications.

C. FEMA 412 - Installing Seismic Restraints for Mechanical Equipment.

D. FEMA 413 - Installing Seismic Restraints for Electrical Equipment.

E. FEMA 414 - Installing Seismic Restraints for Duct and Pipe.

F. FEMA E-74 - Reducing the Risks of Nonstructural Earthquake Damage.

G. IAS AC172 - Accreditation Criteria for Fabricator Inspection Programs for Structural Steel AC172.

H. SMACNA (SRM) - Seismic Restraint Manual Guidelines for Mechanical Systems.

1.04 SUBMITTALS

A. See Section 013000 - Administrative Requirements for submittal procedures.

B. Product Data:
   1. Provide manufacturer's product literature documenting compliance with PART 2 PRODUCTS.
   2. Include seismic rating documentation for each isolator and restraint component accounting for horizontal, vertical, and combined loads.

C. Shop Drawings:

D. Manufacturer's Instructions: Indicate installation instructions with special procedures and setting dimensions.

1.05 QUALITY ASSURANCE

A. Comply with applicable building code.

B. Perform design and installation in accordance with applicable codes.

C. Designer Qualifications: Perform design under direct supervision of a Professional Engineer experienced in design of this type of work and registered and licensed in the State in which the Project is located.

PART 2 PRODUCTS

2.01 MANUFACTURERS

A. The VMC Group; thevmcgroup.com

B. B-line: www.cooperindustries.com

C. Substitutions: See Section 016000 - Product Requirements.

2.02 PERFORMANCE REQUIREMENTS

A. General:
   1. All vibration isolators, base frames and inertia bases to conform to all uniform deflection and stability requirements under all operating loads.
   2. Steel springs to function without undue stress or overloading.
   3. Steel springs to operate in the linear portion of the load versus deflection curve over deflection range of not less than 50 percent above specified deflection.

4. Lateral to vertical stiffness ratio to not exceed 0.08 with spring deflection at minimum 75 percent of specified deflection.
5. All equipment mounted on vibration isolated bases to have minimum operating clearance of 2 inches between the base and floor or support beneath unless noted otherwise.

2.03 EXTERNAL SEISMIC SNUBBER ASSEMBLIES

A. Description: Steel snubbing assemblies designed for external attachment to both equipment and supporting structure that, as part of a complete system, restrain equipment motion in all directions during a seismic event while maintaining vibration isolation during normal operation.

B. Seismic Snubbing Elements:
1. Air Gap: Between 0.125 inches and 0.25 inches unless otherwise indicated.
2. Points of Contact: Cushioned with resilient material, minimum 0.25 inch thick; capable of being visually inspected for damage and replaced.

C. Comply with:

PART 3 EXECUTION

3.01 INSTALLATION

A. Install products in accordance with manufacturer's instructions.

B. Install anchors and fasteners in accordance with ICC Evaluation Services, LLC (ICC-ES) evaluation report conditions of use where applicable.

C. Secure fasteners according to manufacturer's recommended torque settings.

D. Install flexible piping connections to provide sufficient slack for vibration isolation and/or seismic relative displacements as indicated or as required.

3.02 INSTALLATION - GENERAL

A. Install in accordance with manufacturer's instructions.

3.03 FIELD QUALITY CONTROL

A. See Section 014000 - Quality Requirements, for additional requirements.

B. Inspect vibration isolation and/or seismic control components for damage and defects.

C. Correct deficiencies and replace damaged or defective vibration isolation and/or seismic control components.

D. Inspect isolated equipment after installation and submit report. Include static deflections.

3.04 SCHEDULE

END OF SECTION 230548

SECTION 230553
IDENTIFICATION FOR HVAC PIPING AND EQUIPMENT

PART 1 GENERAL

1.01 SECTION INCLUDES

A. Nameplates.

B. Tags.

C. Stencils.

D. Pipe markers.

E. Ceiling tacks.

1.02 REFERENCE STANDARDS

A. ASME A13.1 - Scheme for the Identification of Piping Systems.

B. ASTM D709 - Standard Specification for Laminated Thermosetting Materials.

1.03 SUBMITTALS

A. See Section 013000 - Administrative Requirements for submittal procedures.

B. List: Submit list of wording, symbols, letter size, and color coding for mechanical identification.

C. Chart and Schedule: Submit valve chart and schedule, including valve tag number, location, and function.

D. Product Data: Provide manufacturers catalog literature for each product required.

PART 2 PRODUCTS

2.01 IDENTIFICATION APPLICATIONS

A. All HVAC Equipment (air and water): Nameplates, and Ceiling tacks, where located above lay-in ceiling

B. Control Panels and Control Modules: Nameplates.

C. Fire Dampers and Combination Fire & Smoke Dampers: Nameplates, and Ceiling tacks, where located above lay-in ceiling.

D. Instrumentation: Tags, and Ceiling tacks, where located above lay-in ceiling.

E. Piping: Pipe markers.

F. Relays: Tags, and Ceiling tacks, where located above lay-in ceiling

G. Small-sized Equipment: Tags, and Ceiling tacks, where located above lay-in ceiling.

H. Tanks: Nameplates.

I. Valves: Tags, and ceiling tacks where located above lay-in ceiling.

J. Water Treatment Devices: Nameplates.

2.02 IDENTIFICATION MANUFACTURERS

A. Kolbi Pipe Marker Co.: www.kolbipipemarkers.com.

B. Seton Identification Products: www.seton.com.

C. Brady Corp. .

D. Craftmark Identification Systems.

E. Labelmaster

F. VisionMark, Inc.

G. Almetek Industries, Inc.

H. Advanced Graphic Engraving: www.advancedgraphicengraving.com.

I. MIFAB, Inc.: www.mifab.com.

J. Substitutions: See Section 016000 - Product Requirements.

2.03 NAMEPLATES

A. Letter Color: White.

B. Letter Height: 1/4 inch.

C. Background Color: Black.

D. Plastic: Comply with ASTM D709.

2.04 TAGS

A. Plastic Tags: Laminated three-layer plastic with engraved black letters on light contrasting background color. Tag size minimum 1-1/2 inch diameter.

B. Metal Tags: Aluminum with stamped letters; tag size minimum 1-1/2 inch diameter with smooth edges.

C. Valve Tag Chart: Typewritten letter size list in anodized aluminum frame.

2.05 STENCILS

A. Stencils: With clean cut symbols and letters of following size:
   1. 3/4 to 1-1/4 inch Outside Diameter of Insulation or Pipe: 8 inch long color field, 1/2 inch high letters.
   2. 1-1/2 to 2 inch Outside Diameter of Insulation or Pipe: 8 inch long color field, 3/4 inch high letters.
   3. 2-1/2 to 6 inch Outside Diameter of Insulation or Pipe: 12 inch long color field, 1-1/4 inch high letters.
   4. 8 to 10 inch Outside Diameter of Insulation or Pipe: 24 inch long color field, 2-1/2 inch high letters.
   5. Over 10 inch Outside Diameter of Insulation or Pipe: 32 inch long color field, 3-1/2 inch high letters.
   6. Ductwork and Equipment: 2-1/2 inch high letters.

B. Stencil Paint: As specified in Section 099123, semi-gloss enamel, colors complying with ASME A13.1.

2.06 PIPE MARKERS

A. Color: Comply with ASME A13.1.

B. Plastic Pipe Markers: Factory fabricated, flexible, semi- rigid plastic, preformed to fit around pipe or pipe covering; minimum information indicating flow direction arrow and identification of fluid being conveyed.

C. Plastic Tape Pipe Markers: Flexible, vinyl film tape with pressure-sensitive adhesive backing and printed markings.

D. Underground Plastic Pipe Markers: Bright-colored continuously printed plastic ribbon tape, minimum 6 inches wide by 4 mil, 0.004 inch thick, manufactured for direct burial service.

E. Color code as follows:
   1. Heating, Cooling, and Boiler Feedwater: Green with white letters.
   2. Toxic and Corrosive Fluids: Orange with black letters.
   3. Compressed Air: Blue with white letters.

2.07 CEILING TACKS

A. Description: Steel with 3/4 inch diameter color coded head.

B. Color code as follows:
   1. HVAC Equipment: Yellow.
   2. Fire Dampers and Smoke Dampers: Red.
   3. Heating/Cooling Valves: Blue.

PART 3 EXECUTION

3.01 PREPARATION

A. Degrease and clean surfaces to receive adhesive for identification materials.

B. Prepare surfaces in accordance with Section 099123 for stencil painting.

3.02 INSTALLATION

A. Install nameplates with corrosive-resistant mechanical fasteners, or adhesive. Apply with sufficient adhesive to ensure permanent adhesion and seal with clear lacquer.

B. Install tags with corrosion resistant chain.

C. Apply stencil painting in accordance with Section 099123.

D. Install plastic pipe markers in accordance with manufacturer's instructions.

E. Install plastic tape pipe markers complete around pipe in accordance with manufacturer's instructions.

F. Use tags on piping 3/4 inch diameter and smaller.
   1. Identify service, flow direction, and pressure.

G. Install in clear view and align with axis of piping.

H. Locate identification not to exceed 20 feet on straight runs including risers and drops, adjacent to each valve and Tee, at each side of penetration of structure or enclosure, and at each obstruction.

I. Locate ceiling tacks to locate valves or dampers above lay-in panel ceilings. Locate in corner of panel closest to equipment.

END OF SECTION 230553

SECTION 230593
TESTING, ADJUSTING, AND BALANCING FOR HVAC

PART 1 GENERAL

1.01 SECTION INCLUDES

A. Testing, adjustment, and balancing of air systems.

B. Testing, adjustment, and balancing of hydronic and refrigerating systems.

1.02 RELATED REQUIREMENTS

A. Section 014000 - Quality Requirements: Employment of testing agency and payment for services.

1.03 REFERENCE STANDARDS

A. AABC (NSTSB) - AABC National Standards for Total System Balance, 7th Edition.

B. ASHRAE Std 111 - Measurement, Testing, Adjusting, and Balancing of Building HVAC Systems.

C. NEBB (TAB) - Procedural Standard for Testing, Adjusting and Balancing of Environmental Systems.

D. SMACNA (TAB) - HVAC Systems Testing, Adjusting and Balancing.

1.04 SUBMITTALS

A. See Section 013000 - Administrative Requirements, for submittal procedures.

B. Installer Qualifications: Submit name of adjusting and balancing agency and TAB supervisor for approval within 30 days after award of Contract.

C. Control System Coordination Reports: Communicate in writing to the controls installer all setpoint and parameter changes made or problems and discrepancies identified during TAB that affect, or could affect, the control system setup and operation.

D. Final Report: Indicate deficiencies in systems that would prevent proper testing, adjusting, and balancing of systems and equipment to achieve specified performance.
   1. Submit under provisions of Section 014000.
   2. Include actual instrument list, with manufacturer name, serial number, and date of calibration.
   3. Form of Test Reports: Where the TAB standard being followed recommends a report format use that; otherwise, follow ASHRAE Std 111.
   4. Units of Measure: Report data in both I-P (inch-pound) and SI (metric) units.
   5. Include the following on the title page of each report:
      a. Name of Testing, Adjusting, and Balancing Agency.
      b. Address of Testing, Adjusting, and Balancing Agency.
      c. Telephone number of Testing, Adjusting, and Balancing Agency.
      d. Project name and owner project number.
      e. Project location.
      f. Project Architect.
      g. Project Engineer.
      h. Project Contractor.
      i. Project altitude.
      j. Report date.

E. Project Record Documents: Record actual locations of flow measuring stations and balancing valves and rough setting.

PART 2 PRODUCTS - NOT USED

PART 3 EXECUTION

3.01 GENERAL REQUIREMENTS

A. Perform total system balance in accordance with one of the following:
   1. NEBB Procedural Standards for Testing Adjusting Balancing of Environmental Systems.
   2. SMACNA (TAB).
   3. Maintain at least one copy of the standard to be used at project site at all times.

B. Begin work after completion of systems to be tested, adjusted, or balanced and complete work prior to Substantial Completion of the project.

C. TAB Agency Qualifications:
   1. Company specializing in the testing, adjusting, and balancing of systems specified in this section.
   2. Having minimum of three years documented experience.
   3. Certified by one of the following:
      a. AABC, Associated Air Balance Council: www.aabc.com/#sle; upon completion submit AABC National Performance Guaranty.
      b. NEAABC BB, National Environmental Balancing Bureau: www.nebb.org/#sle.
      c. TABB, The Testing, Adjusting, and Balancing Bureau of National Energy Management Institute: www.tabbcertified.org/#sle.

D. TAB Supervisor and Technician Qualifications: Certified by same organization as TAB agency.

3.02 EXAMINATION

A. Verify that systems are complete and operable before commencing work. Ensure the following conditions:
   1. Systems are started and operating in a safe and normal condition.
   2. Temperature control systems are installed complete and operable.
   3. Proper thermal overload protection is in place for electrical equipment.
   4. Final filters are clean and in place. If required, install temporary media in addition to final filters.
   5. Duct systems are clean of debris.
   6. Fans are rotating correctly.
   7. Fire and volume dampers are in place and open.
   8. Air coil fins are cleaned and combed.
   9. Access doors are closed and duct end caps are in place.
   10. Air outlets are installed and connected.
   11. Duct system leakage is minimized.
   12. Hydronic systems are flushed, filled, and vented.
   13. Pumps are rotating correctly.
   14. Proper strainer baskets are clean and in place.
   15. Service and balance valves are open.

B. Submit field reports. Report defects and deficiencies that will or could prevent proper system balance.

C. Beginning of work means acceptance of existing conditions.

3.03 PREPARATION

A. Provide instruments required for testing, adjusting, and balancing operations. Make instruments available to Architect to facilitate spot checks during testing.

B. Provide additional balancing devices as required.

3.04 ADJUSTMENT TOLERANCES

A. Air Handling Systems: Adjust to within plus or minus 5 percent of design for supply systems and plus or minus 10 percent of design for return and exhaust systems.

B. Air Outlets and Inlets: Adjust total to within plus 10 percent and minus 5 percent of design to space. Adjust outlets and inlets in space to within plus or minus 10 percent of design.

C. Hydronic Systems: Adjust to within plus or minus 10 percent of design.

3.05 RECORDING AND ADJUSTING

A. Field Logs: Maintain written logs including:
   1. Running log of events and issues.
   2. Discrepancies, deficient or uncompleted work by others.
   3. Contract interpretation requests.
   4. Lists of completed tests.

B. Ensure recorded data represents actual measured or observed conditions.

C. Permanently mark settings of valves, dampers, and other adjustment devices allowing settings to be restored. Set and lock memory stops.

D. Mark on drawings the locations where traverse and other critical measurements were taken and cross reference the location in the final report.

E. After adjustment, take measurements to verify balance has not been disrupted or that such disruption has been rectified.

F. Leave systems in proper working order, replacing belt guards, closing access doors, closing doors to electrical switch boxes, and restoring thermostats to specified settings.

3.06 AIR SYSTEM PROCEDURE (AS APPLICABLE TO THE PROJECT)

A. Adjust air handling and distribution systems to provide required or design supply, return, and exhaust air quantities at site altitude.

B. Make air quantity measurements in ducts by Pitot tube traverse of entire cross sectional area of duct.

C. Measure air quantities at air inlets and outlets.

D. Adjust distribution system to obtain uniform space temperatures free from objectionable drafts and noise.

E. Use volume control devices to regulate air quantities only to extend that adjustments do not create objectionable air motion or sound levels. Effect volume control by duct internal devices such as dampers and splitters.

F. Vary total system air quantities by adjustment of fan speeds. Provide drive changes required. Vary branch air quantities by damper regulation.

G. Provide system schematic with required and actual air quantities recorded at each outlet or inlet.

H. Measure static air pressure conditions on air supply units, including filter and coil pressure drops, and total pressure across the fan. Make allowances for 50 percent loading of filters.

I. Adjust outside air automatic dampers, outside air, return air, and exhaust dampers for design conditions.

J. Measure temperature conditions across outside air, return air, and exhaust dampers to check leakage.

K. Where modulating dampers are provided, take measurements and balance at extreme conditions. Balance variable volume systems at maximum air flow rate, full cooling, and at minimum air flow rate, full heating.

L. Measure building static pressure and adjust supply, return, and exhaust air systems to provide required relationship between each to maintain approximately 0.05 inches positive static pressure near the building entries.

M. Check multi-zone units for motorized damper leakage. Adjust air quantities with mixing dampers set first for cooling, then heating, then modulating.

N. For variable air volume system powered units set volume controller to air flow setting indicated. Confirm connections properly made and confirm proper operation for automatic variable air volume temperature control.

O. On fan powered VAV boxes, adjust air flow switches for proper operation.

3.07 WATER SYSTEM PROCEDURE (AS APPLICABLE TO THE PROJECT)

A. Adjust water systems to provide required or design quantities.

B. Use calibrated Venturi tubes, orifices, or other metered fittings and pressure gauges to determine flow rates for system balance. Where flow metering devices are not installed, base flow balance on temperature difference across various heat transfer elements in the system.

C. Adjust systems to provide specified pressure drops and flows through heat transfer elements prior to thermal testing. Perform balancing by measurement of temperature differential in conjunction with air balancing.

D. Effect system balance with automatic control valves fully open to heat transfer elements.

E. Effect adjustment of water distribution systems by means of balancing cocks, valves, and fittings. Do not use service or shut-off valves for balancing unless indexed for balance point.

F. Where available pump capacity is less than total flow requirements or individual system parts, full flow in one part may be simulated by temporary restriction of flow to other parts.

3.08 SCOPE

A. Test of existing prior to commencement of demolition.
   1. As specified on drawings.

B. Test, adjust, and balance the following:

C. See drawing for additional information and requirement.

3.09 MINIMUM DATA TO BE REPORTED

A. Electric Motors:
   1. Manufacturer.
   2. Model/Frame.
   3. HP/BHP.
   4. Phase, voltage, amperage; nameplate, actual, no load.
   5. RPM.
   6. Service factor.
   7. Starter size, rating, heater elements.
   8. Sheave Make/Size/Bore.

B. V-Belt Drives:
   1. Identification/location.
   2. Required driven RPM.
   3. Driven sheave, diameter and RPM.
   4. Belt, size and quantity.
   5. Motor sheave diameter and RPM.
   6. Center to center distance, maximum, minimum, and actual.

C. Pumps:
   1. Identification/number.
   2. Manufacturer.
   3. Size/model.

4. Impeller.
5. Service.
6. Design flow rate, pressure drop, BHP.
7. Actual flow rate, pressure drop, BHP.
8. Discharge pressure.
9. Suction pressure.
10. Total operating head pressure.
11. Shut off, discharge and suction pressures.
12. Shut off, total head pressure.

D. Combustion Equipment:
1. Boiler manufacturer.
2. Model number.
3. Serial number.
4. Firing rate.
5. Overfire draft.
6. Gas meter timing dial size.
7. Gas meter time per revolution.
8. Gas pressure at meter outlet.
9. Gas flow rate.
10. Heat input.
11. Burner manifold gas pressure.
12. Percent carbon monoxide (CO).
13. Percent carbon dioxide (CO2).
14. Percent oxygen (O2).
15. Percent excess air.
16. Flue gas temperature at outlet.
17. Ambient temperature.
18. Net stack temperature.
19. Percent stack loss.
20. Percent combustion efficiency.
21. Heat output.

E. Air Cooled Condensers:
1. Identification/number.
2. Location.
3. Manufacturer.
4. Model number.
5. Serial number.
6. Entering DB air temperature, design and actual.
7. Leaving DB air temperature, design and actual.
8. Number of compressors.

F. Chillers:
1. Identification/number.
2. Manufacturer.
3. Capacity.
4. Model number.
5. Serial number.
6. Evaporator entering water temperature, design and actual.
7. Evaporator leaving water temperature, design and actual.
8. Evaporator pressure drop, design and actual.
9. Evaporator water flow rate, design and actual.
10. Condenser entering water temperature, design and actual.

11. Condenser pressure drop, design and actual.
12. Condenser water flow rate, design and actual.

G. Cooling Tower:
1. Tower identification/number.
2. Manufacturer.
3. Model number.
4. Serial number.
5. Rated capacity.
6. Entering air WB temperature, specified and actual.
7. Leaving air WB temperature, specified and actual.
8. Ambient air DB temperature.
9. Condenser water entering temperature.
10. Condenser water leaving temperature.
11. Condenser water flow rate.
12. Fan RPM.

H. Heat Exchangers:
1. Identification/number.
2. Location.
3. Service.
4. Manufacturer.
5. Model number.
6. Serial number.
7. Steam pressure, design and actual.
8. Primary water entering temperature, design and actual.
9. Primary water leaving temperature, design and actual.
10. Primary water flow, design and actual.
11. Primary water pressure drop, design and actual.
12. Secondary water leaving temperature, design and actual.
13. Secondary water flow, design and actual.
14. Secondary water pressure drop, design and actual.

I. Cooling Coils:
1. Identification/number.
2. Location.
3. Service.
4. Manufacturer.
5. Air flow, design and actual.
6. Entering air DB temperature, design and actual.
7. Entering air WB temperature, design and actual.
8. Leaving air DB temperature, design and actual.
9. Leaving air WB temperature, design and actual.
10. Water flow, design and actual.
11. Water pressure drop, design and actual.
12. Entering water temperature, design and actual.
13. Leaving water temperature, design and actual.
14. Saturated suction temperature, design and actual.
15. Air pressure drop, design and actual.

J. Heating Coils:
1. Identification/number.
2. Location.
3. Service.
4. Manufacturer.

5. Air flow, design and actual.
6. Water flow, design and actual.
7. Water pressure drop, design and actual.
8. Entering water temperature, design and actual.
9. Leaving water temperature, design and actual.
10. Entering air temperature, design and actual.
11. Leaving air temperature, design and actual.
12. Air pressure drop, design and actual.

K. Electric Duct Heaters:
1. Manufacturer.
2. Identification/number.
3. Location.
4. Model number.
5. Design kW.
6. Number of stages.
7. Phase, voltage, amperage.
8. Test voltage (each phase).
9. Test amperage (each phase).
10. Air flow, specified and actual.
11. Temperature rise, specified and actual.

L. Induction Units:
1. Manufacturer.
2. Identification/number.
3. Location.
4. Model number.
5. Size.
6. Design air flow.
7. Design nozzle pressure drop.
8. Final nozzle pressure drop.
9. Final air flow.

M. Air Moving Equipment:
1. Location.
2. Manufacturer.
3. Model number.
4. Serial number.
5. Arrangement/Class/Discharge.
6. Air flow, specified and actual.
7. Return air flow, specified and actual.
8. Outside air flow, specified and actual.
9. Total static pressure (total external), specified and actual.
10. Inlet pressure.
11. Discharge pressure.
12. Sheave Make/Size/Bore.
13. Number of Belts/Make/Size.
14. Fan RPM.

N. Return Air/Outside Air:
1. Identification/location.
2. Design air flow.
3. Actual air flow.
4. Design return air flow.
5. Actual return air flow.

6. Design outside air flow.
7. Actual outside air flow.
8. Return air temperature.
9. Outside air temperature.
10. Required mixed air temperature.
11. Actual mixed air temperature.
12. Design outside/return air ratio.
13. Actual outside/return air ratio.

O. Exhaust Fans:
1. Location.
2. Manufacturer.
3. Model number.
4. Serial number.
5. Air flow, specified and actual.
6. Total static pressure (total external), specified and actual.
7. Inlet pressure.
8. Discharge pressure.
9. Sheave Make/Size/Bore.
10. Number of Belts/Make/Size.
11. Fan RPM.

P. Duct Traverses:
1. System zone/branch.
2. Duct size.
3. Area.
4. Design velocity.
5. Design air flow.
6. Test velocity.
7. Test air flow.
8. Duct static pressure.
9. Air temperature.
10. Air correction factor.

Q. Duct Leak Tests:
1. Description of ductwork under test.
2. Duct design operating pressure.
3. Duct design test static pressure.
4. Duct capacity, air flow.
5. Maximum allowable leakage duct capacity times leak factor.
6. Test apparatus:
    a. Blower.
    b. Orifice, tube size.
    c. Orifice size.
    d. Calibrated.
7. Test static pressure.
8. Test orifice differential pressure.
9. Leakage.

R. Air Monitoring Stations:
1. Identification/location.
2. System.
3. Size.
4. Area.
5. Design velocity.

6. Design air flow.
7. Test velocity.
8. Test air flow.

S. Flow Measuring Stations:
1. Identification/number.
2. Location.
3. Size.
4. Manufacturer.
5. Model number.
6. Serial number.
7. Design Flow rate.
8. Design pressure drop.
9. Actual/final pressure drop.
10. Actual/final flow rate.
11. Station calibrated setting.

T. Terminal Unit Data:
1. Manufacturer.
2. Type, constant, variable, single, dual duct.
3. Identification/number.
4. Location.
5. Model number.
6. Size.
7. Minimum static pressure.
8. Minimum design air flow.
9. Maximum design air flow.
10. Maximum actual air flow.
11. Inlet static pressure.

U. Air Distribution Tests:
1. Air terminal number.
2. Room number/location.
3. Terminal type.
4. Terminal size.
5. Area factor.
6. Design velocity.
7. Design air flow.
8. Test (final) velocity.
9. Test (final) air flow.
10. Percent of design air flow.

V. Sound Level Reports:
1. in general sound test and report are not required when system sound level is accepted by Owner at a visual inspection. If the system/component has a sound problem, upon the request of Owner, the sound and report shall be performed to assist the Engineer and/or contractor to analyze the problem for resolution, at contractor's cost.
2. Location.
3. Octave bands - equipment off.
4. Octave bands - equipment on.

W. Vibration Tests:
1. In general vibration test is not required when system vibration level is accepted by Owner at a visual inspection. If the system/component has a sound problem, upon the request of Owner, the sound and report shall be performed to assist the Engineer and/or contractor to analyze the problem for resolution, at contractor's cost.

2. Location of points:
    a. Fan bearing, drive end.
    b. Fan bearing, opposite end.
    c. Motor bearing, center (if applicable).
    d. Motor bearing, drive end.
    e. Motor bearing, opposite end.
    f. Casing (bottom or top).
    g. Casing (side).
    h. Duct after flexible connection (discharge).
    i. Duct after flexible connection (suction).
3. Test readings:
    a. Horizontal, velocity and displacement.
    b. Vertical, velocity and displacement.
    c. Axial, velocity and displacement.
4. Normally acceptable readings, velocity and acceleration.
5. Unusual conditions at time of test.
6. Vibration source (if non-complying).

END OF SECTION 230593

SECTION 230713
DUCT INSULATION

PART 1 GENERAL

1.01 SECTION INCLUDES

A. Duct insulation.

B. Duct liner.

C. Jacketing and accessories.

1.02 REFERENCE STANDARDS

A. ASTM B209/B209M - Standard Specification for Aluminum and Aluminum-Alloy Sheet and Plate.

B. ASTM C518 - Standard Test Method for Steady-State Thermal Transmission Properties by Means of the Heat Flow Meter Apparatus.

C. ASTM C612 - Standard Specification for Mineral Fiber Block and Board Thermal Insulation.

D. ASTM C916 - Standard Specification for Adhesives for Duct Thermal Insulation.

E. ASTM C1071 - Standard Specification for Fibrous Glass Duct Lining Insulation (Thermal and Sound Absorbing Material).

F. ASTM C1338 - Standard Test Method for Determining Fungi Resistance of Insulation Materials and Facings; 2008.

G. ASTM E84 - Standard Test Method for Surface Burning Characteristics of Building Materials.

H. ASTM E96/E96M - Standard Test Methods for Gravimetric Determination of Water Vapor Transmission Rate of Materials.

I. ASTM G21 - Standard Practice for Determining Resistance of Synthetic Polymeric Materials to Fungi.

J. SMACNA (DCS) - HVAC Duct Construction Standards Metal and Flexible.

K. UL 723 - Standard for Test for Surface Burning Characteristics of Building Materials.

1.03 SUBMITTALS

A. See Section 013000 - Administrative Requirements for submittal procedures.

B. Product Data: Provide product description, thermal characteristics, list of materials and thickness for each service, and locations.

C. Test Reports: For duct insulation, provide independent laboratory reports and test results showing negative asbestos containing materials content using Polarized Light Microscopy (PLM) test method.

1.04 QUALITY ASSURANCE

A. Applicator Qualifications: Company specializing in performing the type of work specified in this section and approved by manufacturer.

1.05 DELIVERY, STORAGE, AND HANDLING

A. Accept materials on site in original factory packaging, labelled with manufacturer's identification, including product density and thickness.

B. Protect insulation from weather and construction traffic, dirt, water, chemical, and mechanical damage, by storing in original wrapping.

1.06 FIELD CONDITIONS

A. Maintain ambient temperatures and conditions required by manufacturers of adhesives, mastics, and insulation cements.

B. Maintain temperature during and after installation for minimum period of 24 hours.

PART 2 PRODUCTS

2.01 REGULATORY REQUIREMENTS

A. Surface Burning Characteristics: Flame spread index/Smoke developed index of 25/50, maximum, when tested in accordance with ASTM E84, UL 723, ASTM E84, or UL 723.

2.02 MANIFACTURERS

A. Knauf Insulation: www.knaufusa.com.

B. Johns Manville Corporation: www.jm.com.

C. Owens Corning Corp: www.owenscorning.com.

D. CertainTeed Corporation: www.certainteed.com.

E. Substitutions: See Section 016000 - Product Requirements.

2.03 GLASS FIBER, FLEXIBLE

A. Vapor Barrier Jacket:
   1. Kraft paper with glass fiber yarn and bonded to aluminized film.
   2. Moisture Vapor Permeability: 0.02 perm inch, when tested in accordance with ASTM E96/E96M.
   3. Secure with pressure-sensitive tape.

B. Vapor Barrier Tape:
   1. Kraft paper reinforced with glass fiber yarn and bonded to aluminized film, with pressure-sensitive rubber-based adhesive.

C. Outdoor Vapor Barrier Mastic:
   1. Vinyl emulsion type acrylic or mastic, compatible with insulation, black color.

2.04 GLASS FIBER, RIGID

A. Insulation: ASTM C612; rigid, noncombustible blanket.
   1. K Value: 0.24 at 75 degrees F, when tested in accordance with ASTM C518.
   2. Maximum Service Temperature: 450 degrees F.
   3. Maximum Water Vapor Absorption: 5.0 percent.
   4. Maximum Density: 8.0 pcf.

B. Vapor Barrier Jacket:
   1. Kraft paper with glass fiber yarn and bonded to aluminized film.
   2. Moisture Vapor Permeability: 0.02 perm inch, when tested in accordance with ASTM E96/E96M.
   3. Secure with pressure-sensitive tape.

C. Vapor Barrier Tape:
   1. Kraft paper reinforced with glass fiber yarn and bonded to aluminized film, with pressure-sensitive rubber-based adhesive.

D. Indoor Vapor Barrier Finish:
   1. Cloth: Untreated; 9 oz/sq yd weight, glass fabric.
   2. Vinyl emulsion type acrylic, compatible with insulation, black color.

2.05 JACKETING AND ACCESSORIES

A. Canvas Jacket: UL listed 6 oz/sq yd plain weave cotton fabric treated with dilute fire-retardant lagging adhesive.
   1. Lagging Adhesive:
      a. Compatible with insulation.

B. Mineral Fiber (Outdoor) Jacket: Asphalt impregnated and coated sheet, 50 lb/square.

C. Aluminum Jacket:
   1. Comply with ASTM B209/B209M, Temper H14, minimum thickness of 0.016 inch with factory-applied polyethylene and kraft paper moisture barrier on the inside surface.

D. Alumaguard Jacket: A composite membrane consisting of a multiply embossed UV-resistant aluminum foil/polymer laminate to which is applied a layer of rubberized asphalt.
   1. Thickness: 55-60 mils
   2. Weight: 0.3 lbs/sf

2.06 DUCT LINER

A. Glass Fiber Insulation: Non-corrosive, incombustible glass fiber complying with ASTM C1071; flexible blanket, rigid board, and preformed round liner board; impregnated surface and edges coated with poly vinyl acetate polymer, acrylic polymer, or black composite.
   1. Fungal Resistance: No growth when tested according to ASTM G21.
   2. Apparent Thermal Conductivity: Maximum of 0.31 at 75 degrees F.
   3. Service Temperature: Up to 250 degrees F.
   4. Rated Velocity on Coated Air Side for Air Erosion: 5,000 fpm, minimum.
   5. Minimum Noise Reduction Coefficients:
      a. 1/2 inch Thickness: 0.30.
      b. 1 inch Thickness: 0.45.
      c. 1-1/2 inches Thickness: 0.60.
      d. 2 inch Thickness: 0.70.

B. Adhesive: Waterproof, fire-retardant type, ASTM C916.

C. Liner Fasteners: Galvanized steel, self-adhesive pad with integral head.

PART 3 EXECUTION

3.01 EXAMINATION

A. Test ductwork for design pressure prior to applying insulation materials.

B. Verify that surfaces are clean, foreign material removed, and dry.

3.02 INSTALLATION

A. Install insulation in accordance with manufacturer's instructions.

B. Install in accordance with NAIMA National Insulation Standards.

C. Insulated Ducts Conveying Air Below Ambient Temperature:
   1. Provide insulation with vapor barrier jackets.
   2. Finish with tape and vapor barrier jacket.
   3. Continue insulation through walls, sleeves, hangers, and other duct penetrations.
   4. Insulate entire system including fittings, joints, flanges, flexible connections, and expansion joints.

D. Insulated Ducts Conveying Air Above Ambient Temperature:
   1. Provide with or without standard vapor barrier jacket.
   2. Insulate fittings and joints. Where service access is required, bevel and seal ends of insulation.
   3. Continue insulation through walls, sleeves, hangers, and other duct penetrations.

E. Ducts Exposed in Finished Spaces shall double wall insulated duct as specified in Section 233100 HVAC Ducts and Casings.

F. Exterior Applications: Provide insulation with vapor barrier jacket. Cover with outdoor jacket finished; see Section _____.

G. External Duct Insulation Application:
   1. Secure insulation with vapor barrier with wires and seal jacket joints with vapor barrier adhesive or tape to match jacket.
   2. Secure insulation without vapor barrier with staples, tape, or wires.
   3. Install without sag on underside of duct. Use adhesive or mechanical fasteners where necessary to prevent sagging. Lift duct off trapeze hangers and insert spacers.
   4. Seal vapor barrier penetrations by mechanical fasteners with vapor barrier adhesive.

5. Stop and point insulation around access doors and damper operators to allow operation without disturbing wrapping.

H. Duct and Plenum Liner Application:
1. Adhere insulation with adhesive for 100 percent coverage.
2. Secure insulation with mechanical liner fasteners. Refer to SMACNA (DCS) for spacing.
3. Seal and smooth joints. Seal and coat transverse joints.
4. Seal liner surface penetrations with adhesive.
5. Duct dimensions indicated are net inside dimensions required for airflow. Increase duct size to allow for insulation thickness.

3.03 SCHEDULES

A. Exhaust Ducts:
1. Exhaust Ducts Within 10 ft of Exterior Openings :
a. Concealed Duct and Exposed Duct in Occupied Space:
1) Flexible Glass Fiber Duct Insulation, [1] inches thick.
2) Flexible Glass Fiber Duct Line Insulation, [1] inches thick.
2. Exhaust Ducts Exposed to Outdoor Air:
a. Double Wall Construction: Flexible Glass Fiber Duct LinerInsulation, [1] inches thick.
b. Rigid Glass Fiber Duct Insulation with Aluminimum Jacket, 1 inches thick.

B. Outside Air Intake Ducts:
1. Concealed Duct and Exposed Duct in Occupied Space:
a. Flexible Glass Fiber Duct Insulation, [1] inches thick.
b. Flexible Glass Fiber Duct Line Insulation, [1] inches thick.
2. Exhaust Ducts Exposed to Outdoor Air:
a. Double Wall Construction: Flexible Glass Fiber Duct LinerInsulation, 2 inches thick.
b. Rigid Glass Fiber Duct Insulation with Aluminimum Jacket, 2 inches thick.

C. Supply Ducts:
1. Concealed Duct and Exposed Duct in Unoccupied Space:
a. Flexible Glass Fiber Duct Insulation, 1 inches thick.
b. Flexible Glass Fiber Duct Line Insulation, 1 inches thick.
2. Exhaust Ducts Exposed to Outdoor Air:
a. Double Wall Construction: Flexible Glass Fiber Duct LinerInsulation, 1 inches thick.
b. Rigid Glass Fiber Duct Insulation with Aluminimum Jacket, 1 inches thick.

D. Supply Ducts Downstream Terminal Boxes:
1. Conceal Duct Round or Exposed Round Duct in Unoccupied Space: Flexible Glass Fiber Duct Insulation, 1 inches thick.
2. Exposed Round Duct in Finished Space:
a. Double Wall Construction with Flexible Glass Fiber Duct Insulation, 1 inches thick.
3. Rectangle Duct: Flexible Glass Fiber Duct Line Insulation, 1 inches thick.

E. Return and Relief Ducts:
1. Interior: As indicated on drawing for acoustic control.
2. Exterior:
a. Double Wall Construction: Flexible Glass Fiber Duct LinerInsulation, 1 inches thick.
b. Rigid Glass Fiber Duct Insulation with Aluminimum Jacket, 1 inches thick.

END OF SECTION 230713

SECTION 230719
HVAC PIPING INSULATION

PART 1 GENERAL

1.01 SECTION INCLUDES

A. Piping insulation.

B. Flexible removable and reusable blanket insulation.

C. Jacketing and accessories.

1.02 RELATED REQUIREMENTS

A. Section 078400 - Firestopping.

B. Section 232113 - Hydronic Piping: Placement of hangers and hanger inserts.

1.03 REFERENCE STANDARDS

A. ASTM C177 - Standard Test Method for Steady-State Heat Flux Measurements and Thermal Transmission Properties by Means of the Guarded-Hot-Plate Apparatus.

B. ASTM C195 - Standard Specification for Mineral Fiber Thermal Insulating Cement.

C. ASTM C449 - Standard Specification for Mineral Fiber Hydraulic-Setting Thermal Insulating and Finishing Cement.

D. ASTM C534/C534M - Standard Specification for Preformed Flexible Elastomeric Cellular Thermal Insulation in Sheet and Tubular Form.

E. ASTM C547 - Standard Specification for Mineral Fiber Pipe Insulation.

F. ASTM C552 - Standard Specification for Cellular Glass Thermal Insulation.

G. ASTM C795 - Standard Specification for Thermal Insulation for Use in Contact with Austenitic Stainless Steel.

H. ASTM E84 - Standard Test Method for Surface Burning Characteristics of Building Materials.

I. ASTM E96/E96M - Standard Test Methods for Gravimetric Determination of Water Vapor Transmission Rate of Materials.

J. UL 723 - Standard for Test for Surface Burning Characteristics of Building Materials.

1.04 SUBMITTALS

A. See Section 013000 - Administrative Requirements for submittal procedures.

B. Product Data: Provide product description, thermal characteristics, list of materials and thickness for each service, and locations.

C. Test Reports: For HVAC pipe and fitting insulaton, provide independent laboratory reports and test results showing negative asbestos containing materials content using Polarized Light Microscopy (PLM) test method.

D. Manufacturer's Instructions: Indicate installation procedures that ensure acceptable workmanship and installation standards will be achieved.

1.05 DELIVERY, STORAGE, AND HANDLING

A. Accept materials on site, labeled with manufacturer's identification, product density, and thickness.

1.06 FIELD CONDITIONS

A. Maintain ambient conditions required by manufacturers of each product.

B. Maintain temperature before, during, and after installation for minimum of 24 hours.

PART 2 PRODUCTS

2.01 REGULATORY REQUIREMENTS

A. Surface Burning Characteristics: Flame spread index/Smoke developed index of 25/50, maximum, when tested in accordance with ASTM E84, UL 723, ASTM E84, or UL 723.

2.02 GLASS FIBER, RIGID

A. Manufacturers:
   1. CertainTeed Corporation: www.certainteed.com.
   2. Johns Manville Corporation: www.jm.com.
   3. Knauf Insulation: www.knaufinsulation.com.
   4. Owens Corning Corp: www.owenscorning.com.
   5. Substitutions: See Section 016000 - Product Requirements.

B. Insulation: ASTM C547and ASTM C795; rigid molded, noncombustible.
   1. K Value: ASTM C177, 0.24 at 75 degrees F.
   2. Maximum Service Temperature: 850 degrees F.
   3. Maximum Moisture Absorption: 0.2 percent by volume.

C. Insulation: ASTM C547and ASTM C795; semi-rigid, noncombustible, end grain adhered to jacket.
   1. K Value: ASTM C177, 0.24 at 75 degrees F.
   2. Maximum Service Temperature: 650 degrees F.
   3. Maximum Moisture Absorption: 0.2 percent by volume.

D. Vapor Barrier Jacket: White kraft paper with glass fiber yarn, bonded to aluminized film; moisture vapor transmission when tested in accordance with ASTM E96/E96M of 0.02 perm-inches.

E. Tie Wire: 0.048 inch stainless steel with twisted ends on maximum 12 inch centers.

F. Vapor Barrier Lap Adhesive: Compatible with insulation.

G. Insulating Cement/Mastic: ASTM C195; hydraulic setting on mineral wool.

H. Fibrous Glass Fabric:
   1. Cloth: Untreated; 9 oz/sq yd weight.
   2. Blanket: 1.0 pcf density.
   3. Weave: 5 by 5.

I. Indoor Vapor Barrier Finish:
   1. Cloth: Untreated; 9 oz/sq yd weight.
   2. Vinyl emulsion type acrylic, compatible with insulation, black color.

J. Outdoor Vapor Barrier Mastic: Vinyl emulsion type acrylic or mastic, compatible with insulation, black color.

K. Outdoor Breather Mastic: Vinyl emulsion type acrylic or mastic, compatible with insulation, black color.

L. Insulating Cement: ASTM C449.

2.03 CELLULAR GLASS

A. Manufacturers:
   1. Pittsburgh Corning Corporation: www.foamglasinsulation.com.
   2. Substitutions: See Section 016000 - Product Requirements.

B. Block Insulation: ASTM C552, Type I, Grade 6.
   1. K Value: 0.35 at 100 degrees F.
   2. Service Temperature: 800 degrees F, maximum.
   3. Water Absorption: 0.5 percent by volume, maximum.

2.04 FLEXIBLE ELASTOMERIC CELLULAR INSULATION

A. Manufacturers:
   1. Aeroflex USA, Inc; Aerocel Stay-Seal with Protape (SSPT): www.aeroflexusa.com/#sle.
   2. Armacell LLC; ArmaFlex Ultra with FlameDefense: www.armacell.us/#sle.
   3. Substitutions: See Section 016000 - Product Requirements.

B. Insulation: Preformed flexible elastomeric cellular rubber insulation complying with ASTM C534/C534M Grade 1; use molded tubular material wherever possible.
   1. Minimum Service Temperature: Minus 40 degrees F.
   2. Maximum Service Temperature: 180 degrees F.
   3. Connection: Waterproof vapor barrier adhesive.

C. Elastomeric Foam Adhesive: Air dried, contact adhesive, compatible with insulation.

2.05 JACKETING AND ACCESSORIES

A. PVC Plastic.
   1. Manufacturers:
      a. Johns Manville Corporation: www.jm.com.
      b. Substitutions: See Section 016000 - Product Requirements.
   2. Jacket: One piece molded type fitting covers and sheet material, off-white color.
      a. Minimum Service Temperature: 0 degrees F.
      b. Maximum Service Temperature: 150 degrees F.
      c. Moisture Vapor Permeability: 0.002 perm inch, maximum, when tested in accordance with ASTM E96/E96M.
      d. Thickness: 10 mil, 0.010 inch.
      e. Connections: Brush on welding adhesive.
   3. Covering Adhesive Mastic: Compatible with insulation.

PART 3 EXECUTION

3.01 EXAMINATION

A. Test piping for design pressure, liquid tightness, and continuity prior to applying insulation materials.

B. Verify that surfaces are clean and dry, with foreign material removed.

3.02 INSTALLATION

A. Install in accordance with manufacturer's instructions.

B. Install in accordance with NAIMA National Insulation Standards.

C. Exposed Piping: Locate insulation and cover seams in least visible locations.

D. Glass Fiber Insulated Pipes Conveying Fluids Below Ambient Temperature:
   1. Provide vapor barrier jackets, factory-applied or field-applied; secure with self-sealing longitudinal laps and butt strips with pressure-sensitive adhesive. Secure with outward clinch expanding staples and vapor barrier mastic.

E. For hot piping conveying fluids over 140 degrees F, insulate flanges and unions at equipment.

F. Glass Fiber Insulated Pipes Conveying Fluids Above Ambient Temperature:
   1. Insulate fittings, joints, and valves with insulation of like material and thickness as adjoining pipe. Finish with glass cloth and adhesive or PVC fitting covers.

G. Inserts and Shields:
   1. Application: Piping 1-1/2 inches diameter or larger.
   2. Shields: Galvanized steel between pipe hangers or pipe hanger rolls and inserts.
   3. Insert location: Between support shield and piping and under the finish jacket.
   4. Insert Configuration: Minimum 6 inches long, of same thickness and contour as adjoining insulation; may be factory fabricated.

5. Insert Material: Hydrous calcium silicate insulation or other heavy density insulating material suitable for the planned temperature range.

H. Continue insulation through walls, sleeves, pipe hangers, and other pipe penetrations. Finish at supports, protrusions, and interruptions. At fire separations, see Section 078400.

I. Pipe Exposed in Mechanical Equipment Rooms or Finished Spaces (less than 10 feet above finished floor): Finish with PVC jacket and fitting covers.

J. Exterior Applications: Provide vapor barrier jacket. Insulate fittings, joints, and valves with insulation of like material and thickness as adjoining pipe, and finish with glass mesh reinforced vapor barrier cement. Cover with aluminum jacket with seams located on bottom side of horizontal piping. Provide two coats of UV resistant finish for flexible elastomeric cellular insulation without jacketing.

K. Buried Piping: Provide factory-fabricated assembly with inner all-purpose service jacket with self-sealing lap, and asphalt impregnated open mesh glass fabric, with 1 mil, 0.001 inch thick aluminum foil sandwiched between three layers of bituminous compound; outer surface faced with polyester film.

L. Heat Traced Piping: Insulate fittings, joints, and valves with insulation of like material, thickness, and finish as adjoining pipe. Size large enough to enclose pipe and heat tracer. Cover with aluminum jacket with seams located on bottom side of horizontal piping.

3.03 SCHEDULE

END OF SECTION 230719

SECTION 230733
REPAIR OF INSULATION AND LAGGING

PART 1 GENERAL

1.01 RELATED WORK SPECIFIED ELSEWHERE

A. Installation of Critical and Primary Barriers, and Work Area Isolation Procedures are set forth in Section 015643 Temporary Enclosures.

B. Project Decontamination procedures are specified in Section 017333 Project Decontamination.

C. Disposal of asbestos-containing waste is specified in Section 028233 Disposal of Asbestos Containing Waste Material.

1.02 DESCRIPTION OF WORK

A. Repair of insulation on all piping upon which asbestos-containing insulation is to remain.

B. Repair of laggings on boilers, breechings and equipment upon which asbestos-containing lagging and/or insulation is to remain.

C. Labeling of repaired Asbestos-Containing Materials.

1.03 RELATED WORK PRACTICES

A. Repair of Insulation and Lagging is defined as Class III asbestos work in 29 CFR 1926.1101. The following work practices are mandatory:
   1. The work shall be performed using wet methods.
   2. To the extent feasible, the work shall be performed using local exhaust ventilation.
   3. Where disturbance involves drilling, cutting, abrading, sanding, chipping, breaking, or sawing of TSI or surfacing material, the Contractor shall use impermeable dropcloths and shall isolate the operation using mini-enclosures or glove bag systems.
   4. Where a "negative exposure assessment" for a job or where monitoring results show the PEL has been exceeded, the Contractor shall contain the area using impermeable
      a. drop-cloths and plastic barriers or shall isolate the operation using a control system specified in 29 CFR 1926.1101 (g)(5).

B. Refer to Section 015736 Respiratory Protection for the minimum respiratory protection required during this operation.

1.04 SUBMITTALS

A. Before the Start of Work: Submit the following to the Owner for review. No work shall begin until these submittals are provided:
   1. Mineral Wool Insulating Cement: Provide product data
   2. Waterproof Cement: Provide product data
   3. Nonwoven Fibrous Glass Mat: Provide product data
   4. Open Weave Glass Fiber Mat: Provide product data
   5. Plastic Jackets: Provide product data
   6. Labels: Submit samples

PART 2 PRODUCTS

2.01 MINERAL WOOL INSULATING CEMENT

A. Provide job-mixed insulating plaster manufactured for use on plumbing equipment.

2.02 WATERPROOF CEMENT

A. Provide premixed or job mixed cement manufactured for coating of thermal insulation laggings.

2.03 NONWOVEN FIBROUS GLASS MAT

A. Provide felt approximately 3/32" thick fabricated from glass fibers.

2.04 OPEN WEAVE GLASS FIBER MAT

A. Provide cloth with approximately 1/4" openings in weave, fabricated from glass fibers twisted or braided into strands approximately 1/128" in diameter.

2.05 BRIDGING TYPE ENCAPSULANT

A. As specified in Section 099733 Encapsulation of Asbestos Containing Materials.

PART 3 EXECUTION

3.01 GENERAL

A. Piping: Remove any loose material with HEPA vacuum. No existing jacket material is to be removed.

B. Reinforced Bridging Encapsulant: Repair with reinforced bridging encapsulant:
   1. Fill holes with mineral wool insulating cement and cover damaged areas with nonwoven fibrous glass mat completely saturated with bridging type encapsulant.
   2. Wrap open joints with nonwoven fibrous glass mat embedded in bridging type encapsulant.
   3. Smooth mat to a wrinkle free condition. Allow to dry and coat entire surface of mat with an additional coat of bridging type encapsulant and brush to a smooth uniform appearance.

C. Fittings: Remove any loose material with HEPA vacuum. No existing jacket material is to be removed.

D. Reinforced Bridging Encapsulant: Repair with reinforced bridging encapsulant:
   1. Patch damaged fittings as required, using mineral wool insulating cement. Smooth insulation to a uniform appearance, continuous with and not overlapping adjacent straight insulation runs.
   2. Cover entire surface of fitting with nonwoven fibrous glass mat embedded in bridging type encapsulant. Stretch to conform to shape of fitting and smooth to a uniform appearance without wrinkles.
   3. Overlap jackets of adjacent straight insulation sections by 3."
   4. Allow to dry and coat entire surface of mat with bridging type encapsulant and brush to a smooth finished appearance.

E. Equipment Laggings: (hot water tanks, converters, etc.) Fill damaged portion of lagging as required with mineral wool insulating cement and cover with nonwoven fibrous glass mat completely embedded in bridging type encapsulant. Coat area of repair and six inches on all sides with bridging type encapsulant, brush out to a uniform appearance. Completely coat laggings which do not possess a canvas jacket with two coats of bridging type encapsulant.

F. Boiler and Smoke Hoods Breeching Laggings: Fill damaged portions of laggings, as required, with mineral wool insulating cement. Coat entire surface of lagging with 1/4" minimum thickness of mineral wool insulating cement reinforced with open weave glass fiber mat. Trowel surface smooth finish.

3.02 LABELING

A. Label all asbestos-containing piping insulation, fitting insulation laggings, etc. with a 3" x 5" stickers containing the words:

CAUTION
ASBESTOS HAZARD
DON NOT DISTURB WITHOUT
PROPER TRAINING AND EQUIPMENT

END OF SECTION 230733

SECTION 230913
INSTRUMENTATION AND CONTROL DEVICES FOR HVAC

PART 1 GENERAL

1.01 SECTION INCLUDES

A. Control panels.

B. Control Valves:
   1. Electronic operators.

C. HVAC&R Sensors:
   1. Temperature sensors.
   2. Humidity sensors.

D. Time clocks.

E. Sensors with transmitters:
   1. Building static pressure transmitters.

F. Control valves.

G. Automatic dampers.

H. Damper operators.

I. Time clocks.

J. Input/Output sensors.

K. Miscellaneous accessories.

1.02 RELATED REQUIREMENTS

A. Section 232113 - Hydronic Piping: Installation of control valves, flow switches, temperature sensor sockets, and gauge taps.

B. Section 233300 - Air Duct Accessories.

C. Section 260583 - Wiring Connections: Electrical characteristics and wiring connections.

D. Section 262726 - Wiring Devices: Elevation of exposed components.

1.03 REFERENCE STANDARDS

A. NEMA BS 31032 - Residential Controls–Electrical Wall-Mounted Room Thermostats.

B. NEMA EN 10250 - Enclosures for Electrical Equipment (1000 Volts Maximum).

C. NFPA 90A - Standard for the Installation of Air-Conditioning and Ventilating Systems.

D. UL 94 - Tests for Flammability of Plastic Materials for Parts in Devices and Appliances.

1.04 SUBMITTALS

A. See Section 013000 - Administrative Requirements for submittal procedures.

B. Submit all submital documents listed in this Section under Section 230923 - Direct-Digital Control System for HVAC.

C. Product Data: Provide description and engineering data for each control system component. Include sizing as requested. Provide data for each system component and software module.

D. Shop Drawings: Indicate complete operating data, system drawings, wiring diagrams, and written detailed operational description of sequences.
   1. Submit schedule of valves indicating size, flow, and pressure drop for each valve.
      a. Valve submittals shall be coordinated for type, quantity, size, and piping configuration to ensure compatibility with pipe design.
   2. Submit automatic dampers indicating arrangement, velocities, and static pressure drops for each system.

a. Damper submittals shall be coordinated for type, quantity, and size to ensure compatibility with sheet metal design.

E. Manufacturer's Instructions: Provide for all manufactured components.

F. Operation and Maintenance Data: Include inspection period, cleaning methods, recommended cleaning materials, and calibration tolerances.

1.05 QUALITY ASSURANCE

1.06 WARRANTY

A. See Section 017800 - Closeout Submittals for additional warranty requirements.

B. Provide five year manufacturer's warranty for contro valves.

PART 2 PRODUCTS

2.01 SYSTEM PERFORMANCE

A. Reporting Accuracy. System shall report values with minimum end-to-end accuracy listed in Table below.

Measured Variable	Reported Accuracy
Space Temperature	±0.5ºC (±1ºF)
Ducted Air	±0.5ºC (±1ºF)
Outside Air	±1.0ºC (±2ºF)
Dew Point	±1.5ºC (±3ºF)
Water Temperature	±0.5ºC (±1ºF)
Delta-T	±0.15º (±0.25ºF)
Relative Humidity	±5% RH
Water Flow	±2% of full scale
Airflow (terminal)	±10% of full scale (Accuracy applies to 10%–100% of scale)
Airflow (measuring stations)	±5% of full scale
Airflow (pressurized spaces)	±3% of full scale
Air Pressure (ducts)	±25 Pa (±0.1 in. w.g.)
Air Pressure (space)	±3 Pa (±0.01 in. w.g.)
Water Pressure	±2% of full scale (For both absolute and differential pressure)
Electrical	±1% of reading (Not including utility-supplied meters)
Carbon Monoxide (CO)	±5% of reading
Carbon Dioxide (CO2)	±50 ppm

B. Control Stability and Accuracy. Control loops shall maintain measured variable at setpoint within tolerances listed in Table below.

Controlled Variable	Control Accuracy	Range of Medium
Air Pressure	±50 Pa (±0.2 in. w.g.) ±3 Pa (±0.01 in. w.g.)	0–1.5 kPa (0–6 in. w.g.) -25 to 25 Pa (-0.1 to 0.1 in. w.g.)
Airflow	±10% of full scale	
Space Temperature	±1.0ºC (±2.0ºF)	
Duct Temperature	±1.5ºC (±3ºF)	
Humidity	±5% RH	
Fluid Pressure	±10 kPa (±1.5 psi)	MPa (1–150 psi)

	±250 Pa (±1.0 in. w.g.)	0–12.5 kPa (0–50 in. w.g.) differential

2.02 EQUIPMENT - GENERAL

A. Products Requiring Electrical Connection: Listed and classified by Underwriters Laboratories Inc., as suitable for the purpose specified and indicated.

2.03 CONTROL PANELS

A. NEMA EN 10250, general purpose utility enclosures with enameled finished face panel.

B. Provide common keying for all panels.

2.04 CONTROL VALVES

A. Manufacturer:
   1. BELIMO.

B. Control Valves:
   1. Factory fabricated of type, body material, and pressure class based on maximum pressure and temperature rating of piping system, unless otherwise indicated.
   2. Sizing:
      a. Two-Position: Line size or size using a pressure differential of 1 psi.
      b. Two-Way Modulating: 5 psid or twice the load pressure drop, whichever is more.
      c. Three-Way Modulating: Twice the load pressure drop, but not more than 5 psid

C. The manufacturer shall warrant all components for a period of 5 years from the date of production, with the first two years unconditional (except as noted).

D. Pressure Independent Control Valves [Water Coil Optimization] (Also, see 2.16.F.2 for Pressure Independent Zone Valves.)
   1. NPS 2 and Smaller: Forged brass body rated at no less than 250 PSI, stainless steel ball and stem, female NPT union ends, dual EPDM lubricated O-rings and a brass or TEFZEL characterizing disc.
   2. NPS 2-1/2 through 6: GG25 cast iron body according to ANSI Class 125, standard class B, stainless steel ball and blowout proof stem, flange to match ANSI 125 with a dual EPDM O-ring packing design, PTFE seats, and a stainless steel flow characterizing disc.
   3. Accuracy: The control valves shall accurately control the flow from 0 to 100% rated flow with an operating pressure differential range of 5 to 50 PSI differential across the valve with a valve body flow accuracy of +/- 5 total assembly error incorporating differential pressure fluctuation, manufacturing tolerances and valve hysteresis
   4. Flow Characteristics: Equal percentage characteristic.
   5. All actuators shall be capable of being electronically programmed in the field by use of external computer software or a dedicated handheld tool for the adjustment of flow. Programming using actuator mounted switches or multi-turn actuators are not acceptable.
   6. Water coil optimization shall be accomplished by utilizing a pressure independent control valve assembly; two temperature sensors providing feedback of coil inlet and outlet water temperatures; and an electronic flow meter to provide analog flow feedback. Software shall control the valve to avoid the coil differential temperature from falling below a programmed set point, The valve assembly shall be capable of accepting an analog signal representing the coil power required. Real-time data and configuration of valve operating parameters shall be available by means of BACnet MS/TP, BACnet/IP or HTTP. Monitored points shall include, but not be limited to inlet and outlet coil water temperatures, absolute flow, absolute valve position, absolute coil power and total heating/cooling energy in BTU/hr. Configuration points shall include but not be limited to valve, flow, and power settings. Historical trend data shall be stored for up to 13 months and be retrievable in a standard time-stamped format.

7. The manufacturer shall provide a published commissioning procedure following the guidelines of the National Environmental Balancing Bureau (NEBB) and the Testing Adjusting Balancing Bureau (TABB).
8. A wet calibrated electronic flow meter shall provide dynamic feedback to measure flow and verify performance.
9. The control valve shall require no maintenance and shall not include replaceable cartridges.

E. Characterized Control Valves:
1. 3" and Smaller: Nickel-plated forged brass body rated at no less than 400 psi, stainless steel ball and blowout proof stem, female NPT end fittings, with a dual EPDM O-ring packing design, fiberglass reinforced Teflon seats, and a TEFZEL or stainless steel flow characterizing disc.
2. 2-1/2" through 6": GG25 cast iron body, ANSI 125, class B, stainless steel ball and blowout proof stem, flange to match ANSI 125 with a dual EPDM O-ring package design, PTFE seats, and a stainless steel flow characterizing disc.
3. Valve assemblies shall be maintenance free.
4. NPS 2" and smaller characterized control valves shall be provided as part of a pipe package supplied by the valve manufacturer. The supply side of the coil shall contain a strainer/shut-off ball valve/drain with hose connection/[an integrated isolation ball valve/manual air vent with a P/T port. The return side of the coil shall contain a union fitting with a P/T port, characterized control valve, an integrated manual balancing valve/union/isolation ball valve/manual air vent with P/T port. Shut-off valves as an integrated part of the characterized control valve are prohibited. For 3-way installations, supply an integrated 100% port isolation valve/manual air vent with a P/T port for field installation in the bypass of the circuit . A 12" or 24" flexible hose set shall be provided for each coil supply and return connection for all pipe packages.

F. Zone Valves (two-position and modulating)
1. Non-Pressure Independent Zone Valve
   a. NPS ½" and ¾": Forged brass body rated at no less than 230 psi, chrome plated brass ball and stem, NPT female ends and EPDM O-rings. Valves utilizing flapper or paddle assemblies for flow control shall not be permitted.
2. Flow Characteristic: Equal percentage (2-way) and Linear (3-way).
3. Flow rating (Cv or gpm max) shall be field adjustable without the use of external devices. The control span shall adapt to the adjusted flow rating.
4. The control valve shall require no maintenance and shall not include replaceable cartridges.

G. Globe valves shall have the following characteristics:
1. Hydraulic system globe valves shall have the following characteristics:
   a. NPS 2 and Smaller: ANSI Class 250 bronze body, stainless steel stem, brass plug, bronze seat, and a TFE packing.
   b. NPS 2-1/2 and Larger: ANSI Class 125 [250] cast iron body, stainless steel stem, bronze plug, bronze seat, and a TFE V-ring packing.
   c. Flow Characteristics: Two-way valves shall have equal percentage characteristics; three-way valves shall have linear characteristics.
   d. Two- and three-way globe valves shall be used only if characterized control valves do not fit the sizing criteria or application.

H. Butterfly Valves - Resilient Seat:
1. NPS 2 to 12: Valve body shall be full lugged ductile iron 200 psig body with a 304 stainless steel disc, EPDM seat, extended neck and shall meet ANSI Class 125/150 flange standards. Disc-to-stem connection shall utilize an internal spline. The shaft shall be supported at four locations by RPTFE bushings. A coated disc shell is not acceptable.

2. NPS 14 and Larger: Valve body shall be full lugged ductile iron 150 psig body with a 304 stainless steel disc, EPDM seat, extended neck and shall meet ANSI Class 125/150 flange standards. Disc-to-stem connection shall utilize a dual-pin method to prevent the disc from settling onto the liner. The shaft shall be supported at four locations by RPTFE bushings. A coated disc shell is not acceptable.
3. Sizing: Two-Position (on/off) butterfly valves shall be sized using the 900 Cv rating. Modulating butterfly valves shall be sized using the 600 Cv rating.
4. Flow Characteristics: Modified equal percentage, unidirectional dead end service.
5. Close-Off Pressure Rating: Bubble-tight shutoff (no leakage).
6. The combination of two 2-way butterfly valves in a tee configuration cross-linked to ensure proper flow orientation shall be permitted. The tee shall be constructed of cast iron/stainless steel.

I. Butterfly Valves - High Performance:
1. Valve body shall be full lugged carbon steel ANSI Class 150 [300] body with a 316 stainless steel disc without a nylon coating, RTFE seat, and be ANSI Class 150300 flange standards. Blowout-proof shaft shall be 17-4ph stainless steel and shall be supported at four locations by glass-backed TFE bushings. Valve packing shall be Chevron TFE and shall include fully adjustable packing flange and separable packing gland. Valve body shall have long stem design to allow for 2” insulation (minimum). Valve face-to-face dimensions shall comply with API 609 and MSS-SP-68. Valve assembly shall be completely assembled and tested, ready for installation.
2. Sizing: Two-Position (on/off) butterfly valves shall be sized using the 900 Cv rating. Modulating butterfly valves shall be sized using the 600 Cv rating.
3. Flow Characteristics: Modified equal percentage, full rated, bi-directional, dead end service with either flange removed.
4. Close-Off Pressure Rating: Bubble-tight shutoff (no leakage).
5. Media Temperature Range: ANSI Class 150 [300] limitations.
6. Max Differential Pressure: 285 psi @ 100 deg F for ANSI 150 (725 psi @ 100 deg F for ANSI 300).
7. The combination of two 2-way butterfly valves in a tee configuration cross-linked to ensure proper flow orientation shall be permitted. The tee should be constructed of cast iron/stainless steel.

J. Water valves shall fail normally open or closed, as scheduled on plans, or as follows:
1. Water zone valves-normally open preferred.
2. Heating coils in air handlers-normally open.
3. Chilled water control valves-normally closed.
4. Other applications-as scheduled or as required by sequences of operation.

K. Electronic Operators:
1. Control valves shall be two-way or three-way type for two-position or modulating service as indicated.
2. Valves shall spring return to normal position as indicated on freeze, fire, or temperature protection.
3. Close-off (differential) Pressure Rating: Valve actuator and trim shall be furnished to provide the following minimum close-off pressure ratings:
   a. Water Valves:
      1) Two-way: 150% of total system (pump) head.
      2) Three-way: 300% of pressure differential between ports A and B at design flow or 100% of total system (pump) head.
4. Select operator for full shut off at maximum pump differential pressure.
5. Signal and Range. Proportional actuators shall accept a 0-10 Vdc or a 0-20 mA control signal and shall have a 2-10 Vdc or 4-20 mA operating range. (Floating motor actuators may be substituted for proportional actuators in terminal unit applications)
6. Wiring. 24 Vac and 24 Vdc actuators shall operate on Class 2 wiring.

7. Manual Positioning. Operators shall be able to manually position each actuator when the actuator is not powered. Non-spring-return actuators shall have an external manual gear release. Spring-return actuators with more than 60 in.-lb torque capacity shall have a manual crank.
8. Product:
    a. Belimo
    b. Industrial Actuators (Butterfly Valves)

2.05 CONTROL DAMPERS

A. See Section 233300 for dampers and this section for actuators and operators.

2.06 DAMPER OPERATORS

A. General: Provide smooth proportional control with sufficient power for air velocities 20 percent greater than maximum design velocity and to provide tight seal against maximum system pressures. Provide spring return for two position control and for fail safe operation.
    1. Provide sufficient number of operators to achieve unrestricted movement throughout damper range.
    2. Provide one operator for maximum 24 sq ft damper section.

2.07 HVAC&R SENSORS

A. Temperature Sensors:
    1. Use RTD (Resistance Temperature Device) type temperature sensing elements with characteristics resistant to moisture, vibration, and other conditions consistent with the application without affecting accuracy and life expectancy.
    2. Construct RTD of nickel or platinum with base resistance of 1000 ohms at 70 degrees F.
    3. 100 ohm platinum RTD is acceptable if used with project DDC controllers.
    4. Temperature Sensing Device: Compatible with project DDC controllers.
    5. Performance Characteristics:
        a. RTD:
            1) Room Sensor Accuracy: Plus/minus 0.50 degrees F minimum.
            2) Duct Averaging Accuracy: Plus/minus 0.50 degrees F minimum.
            3) Chilled Water Accuracy: Plus/minus 0.50 degrees F minimum.
            4) All Other Accuracy: Plus/minus 0.75 degrees F minimum.
            5) Range: Minus 40 degrees F through 220 degrees F minimum.
        b. Thermistor:
            1) Accuracy (All): Plus/minus 0.36 degrees F minimum.
            2) Range: Minus 25 degrees F through 122 degrees F minimum.
            3) Heat Dissipation Constant: 2.7 mW per degree C.
        c. Temperature Transmitter:
            1) Accuracy: 0.10 degree F minimum or plus/minus 0.20 percent of span.
            2) Output: 4 to 20 mA.
        d. Sensing Range:
            1) Provide limited range sensors if required to sense the range expected for a respective point.
            2) Use RTD type sensors for extended ranges beyond minus 30 to 230 degrees F.
            3) Use temperature transmitters in conjunction with RTD's when RTD's are incompatible with DDC controller direct temperature input.
        e. Wire Resistance:
            1) Use appropriate wire size to limit temperature offset due to wire resistance to 1.0 degree F or use temperature transmitter when offset is greater than 1.0 degree F due to wire resistance.
            2) Compensate for wire resistance in software input definition when feature is available in the DDC controller.
        f. Room Sensors: Locking cover as indicated on drawing.

g. Outside Air Sensors: Watertight inlet fitting shielded from direct rays of the sun.
h. Room Temperature Sensors:
    1) Construct for surface or wall box mounting.
    2) Provide the following:
        (a) Setpoint reset slide switch with an adjustable temperature range.
        (b) Momentary override request push button for activation of after-hours operation as indicated on drawing.
        (c) Analog thermometer.
    3) Product: BAPI; www.bapihvac.com
        (a) Substitutions: See Section 01 6000 - Product Requirements.
i. Temperature Averaging Elements:
    1) Use on duct sensors for ductwork 10 sq ft or larger.
    2) Use averaging elements where prone to stratification with sensor length 8 ft or 16 ft.
    3) Provide for all mixed air and heating coil discharge sensors regardless of duct size.
j. Insertion Elements:
    1) Use in ducts not affected by temperature stratification or smaller than 11 sq inches.
    2) Provide dry type, insertion elements for liquids, installed in immersion wells, with minimum insertion length of 2.5 inches.
k. Immersion Sensors. Provide immersion sensors with a separable stainless steel well. Well pressure rating shall be consistent with system pressure it will be immersed in. Well shall withstand pipe design flow velocities.

B. Humidity Sensors:
1. Drift: No more than 1% of full scale annually.
2. Room Sensors: Span of 20 - 80 percent relative humidity.
    a. Provide locking cove as indicated on drawing.
3. Duct and Outside Air Sensors: With element guard and mounting plate, range of 0 - 100 percent relative humidity.
    a. Duct Sensors: have a sampling chamber.
    b. Outside Air Sensors: suitable for ambient conditions of -40°F–170°F.

C. Static Pressure Sensors:
1. Unidirectional with ranges not exceeding 150 percent of maximum expected input.
2. Temperature compensate with typical thermal error or 0.06 percent of full scale in temperature range of 40 to 100 degrees F.
3. Accuracy: One percent of full scale with repeatability 0.3 percent.
4. Output: 0 - 5 vdc with power at 12 to 28 vdc.

D. Equipment Operation Sensors:
1. Status Inputs for Fans: Differential pressure switch with adjustable range of 0 to 5 inches wg.
2. Status Inputs for Pumps: Differential pressure switch piped across pump with adjustable pressure differential range of 8 to 60 psi.
3. Status Inputs for Electric Motors: Current sensing relay with current transformers, adjustable and set to 175 percent of rated motor current.

E. Damper Position Indication: Potentiometer mounted in enclosure with adjustable crank arm assembly connected to damper to transmit 0 - 100 percent damper travel.

F. Carbon Monoxide Detectors:
1. Single or multichannel dual level detectors, using solid state sensors with three year minimum life. Sensor replacement shall take maximum 15 minutes. Suitable over temperature range of 23 to 130 degrees F.

2. Provide individual indicators and contractors for each level, initially calibrated for 50 ppm and 100 ppm.
3. Maximum response time to 100 ppm CO calibration gas: Two minutes.

G. Carbon Dioxide Sensors:
1. General: Provide non-dispersive infrared (NDIR) CO2 sensors with integral transducers and linear output.
a. Linear, CO2 Concentration Range Display: 0 to 2000 ppm.
b. Full Scale Accuracy: Plus/minus 100 ppm or plus/minus 5 percent of reading which ever is higher.
c. Maximum Response Time: 1 minute.
d. Analog Output: 0-10 VDC.
e. Rated Ambient Conditions:
1) Air Temperature: Range of 32 to 122 degrees F.
2) Relative Humidity: Range of 0 to 95 percent (non-condensing).
2. Calibration Characteristics:
a. Automatically compensating algorithm for sensor drift due to sensor degradation.
b. Maximum Drift: 2 percent.
c. User calibratable with a minimum calibration interval of 5 years.
3. Construction:
a. Sensor Chamber: Non-corrosive material for neutral effect on carbon dioxide sample.
b. Provide duct mounted sensors with duct probe designed to protect sensing element from dust accumulation and mechanical damage.

2.08 TIME CLOCKS

A. Seven day programming switch timer with synchronous timing motor and seven day dial, continuously charged Ni-cad battery driven power failure 8 hour carry over and multiple switch trippers to control systems for minimum of two and maximum of eight signals per day with two normally open and two normally closed output switches.

2.09 OVERRIDE TIMERS.

A. Unless implemented in control software, override timers shall be spring-wound line voltage, UL Listed, with contact rating and configuration required by application. Provide 0-6 hour calibrated dial unless otherwise specified. Flush mount timer on local control panel face or where shown.

2.10 FLOW SWITCHES.

A. Flow-proving switches shall be paddle (water service only) or differential pressure type (air or water service) as shown. Switches shall be UL listed, SPDT snap-acting, and pilot duty rated (125 VA minimum).

B. Paddle switches shall have adjustable sensitivity and NEMA 1 enclosure unless otherwise specified.

C. Differential pressure switches shall have scale range and differential suitable for intended application and NEMA 1 enclosure unless otherwise specified.

2.11 RELAYS.

A. Control Relays. Control relays shall be plug-in type, UL listed, and shall have dust cover and LED “energized” indicator. Contact rating, configuration, and coil voltage shall be suitable for application.

B. Time Delay Relays. Time delay relays shall be solid-state plug-in type, UL listed, and shall have adjustable time delay. Delay shall be adjustable ±100% from setpoint shown. Contact rating, configuration, and coil voltage shall be suitable for application. Provide NEMA 1 enclosure for relays not installed in local control panel.

2.12 SENSORS WITH TRANSMITTERS

A. Building Static Pressure Transmitters:

1. One pipe, direct acting, double bell, scale range 0.01 to 6.0 in-wc positive or negative, and sensitivity of 0.0005 in-wc. Transmit electronic signal to receiver with matching scale range.

B. Pressure Transmitters:
   1. One pipe direct acting for gas, liquid, or steam service, range suitable for system, proportional electronic output.

C. Temperature Transmitters:
   1. One pipe, directly proportional output signal to measured variable, linearity within plus or minus 1/2 percent of range for 200 degrees F span and plus or minus 1 percent for 50 degrees F span, with 50 degrees F. temperature range, compensated bulb, averaging capillary, or rod and tube operation on 20 psig input pressure and 3 to 15 psig output.

D. Humidity Transmitters:
   1. One pipe, directly proportioned output signal to measured variable, linearity within plus or minus 1 percent for 70 percent relative humidity span, capable of withstanding 95 percent relative humidity without loss of calibration.

E. Current Transmitters.
   1. AC current transmitters shall be self-powered, combination split-core current transformer type with built-in rectifier and high-gain servo amplifier with 4-20 mA two-wire output. Full-scale unit ranges shall be 10 A, 20 A, 50 A, 100 A, 150 A, and 200 A, with internal zero and span adjustment. Unit accuracy shall be ±1% full-scale at 500 ohm maximum burden.
   2. Transmitter shall meet or exceed ANSI/ISA S50.1 requirements and shall be UL/CSA recognized.
   3. Unit shall be split-core type for clamp-on installation on existing wiring.

F. Voltage Transmitters.
   1. AC voltage transmitters shall be self-powered single-loop (two-wire) type, 4-20 mA output with zero and span adjustment.
   2. Adjustable full-scale unit ranges shall be 100-130 Vac, 200-250 Vac, 250-330 Vac, and 400-600 Vac. Unit accuracy shall be ±1% full-scale at 500 ohm maximum burden.
   3. Transmitters shall meet or exceed ANSI/ISA S50.1 requirements and shall be UL/CSA recognized at 600 Vac rating.

2.13 TRANSFORMERS

A. Current Transformers.
   1. AC current transformers shall be UL/CSA recognized and shall be completely encased (except for terminals) in approved plastic material.
   2. Transformers shall be available in various current ratios and shall be selected for ±1% accuracy at 5 A full-scale output.
   3. Use fixed-core transformers for new wiring installation and split-core transformers for existing wiring installation.

B. Voltage Transformers.
   1. AC voltage transformers shall be UL/CSA recognized, 600 Vac rated, and shall have built-in fuse protection.
   2. Transformers shall be suitable for ambient temperatures of 4°C-55°C (40°F-130°F) and shall provide ±0.5% accuracy at 24 Vac and 5 VA load.
   3. Windings (except for terminals) shall be completely enclosed with metal or plastic.

2.14 HYDRONIC FLOWMETERS

A. Insertion-Type Turbine Meter
   1. Dual counter-rotating axial turbine elements, each with its own rotational sensing system, and an averaging circuit to reduce measurement errors due to swirl and flow profile distortion. Single turbine for piping 2 inches and smaller. Flow sensing turbine rotors shall be non-metallic and not impaired by magnetic drag.

2. Insertion type complete with ‘hot-tap’ isolation valves to enable sensor removal without water supply system shutdown.
3. Sensing method shall be impedance sensing (non magnetic and non photoelectric)
4. Volumetric accuracy
   a. ± 0.5% of reading at calibrated velocity
   b. ± 1% of reading from 3 to 30 ft/s (10:1 range)
   c. ± 2% of reading from 0.4 to 20 ft/s (50:1 range)
5. Each sensor shall be individually calibrated and tagged accordingly against the manufacturer’s primary standards which must be accurate to within 0.1% of flow rate and traceable to the National Institute of Standards and Technology (NIST).
6. Maximum operating pressure of 400 psi and maximum operating temperature of 200°F continuous (220°F peak).
7. All wetted metal parts shall be constructed of 316 stainless steel.
8. Analog outputs shall consist of non interactive zero and span adjustments, a DC linearly of 0.1% of span, voltage output of 0-10 Vdc, and current output of 4-20 mA.

2.15 CURRENT SWITCHES.

A. Current-operated switches shall be self-powered, solid-state with adjustable trip current. Select switches to match application current and DDC system output requirements.

2.16 PRESSURE TRANSDUCERS.

A. Transducers shall have linear output signal and field-adjustable zero and span.

B. Transducer sensing elements shall withstand continuous operating conditions of positive or negative pressure 50% greater than calibrated span without damage.

C. Water pressure transducer diaphragm shall be stainless steel with minimum proof pressure of 1000 kPa (150 psi). Transducer shall have 4-20 mA output, suitable mounting provisions, and block and bleed valves.

D. Water differential pressure transducer diaphragm shall be stainless steel with minimum proof pressure of 1000 kPa (150 psi). Over-range limit (differential pressure) and maximum static pressure shall be 2000 kPa (300 psi.)Transducer shall have 4-20 mA output, suitable mounting provisions, and 5-valve manifold.

2.17 DIFFERENTIAL PRESSURE SWITCHES.

A. Differential pressure switches (air or water service) shall be UL listed, SPDT snap-acting, pilot duty rated (125 VA minimum) and shall have scale range and differential suitable for intended application and NEMA 1 enclosure unless otherwise specified.

2.18 PRESSURE-ELECTRIC (PE) SWITCHES.

A. Shall be metal or neoprene diaphragm actuated, operating pressure rated for 0-175 kPa (0-25 psig), with calibrated scale minimum setpoint range of 14-125 kPa (2-18 psig) minimum, UL listed.

B. Provide one- or two-stage switch action (SPDT, DPST, or DPDT) as required by application Electrically rated for pilot duty service (125 VA minimum) and/or for motor control.

C. Switches shall be open type (panel-mounted) or enclosed type for remote installation. Enclosed type shall be NEMA 1 unless otherwise specified.

D. Each pneumatic signal line to PE switches shall have permanent indicating gauge.

PART 3 EXECUTION

3.01 EXAMINATION

A. Verify existing conditions before starting work.

B. Verify that systems are ready to receive work.

C. Beginning of installation means installer accepts existing conditions.

D. Sequence work to ensure installation of components is complementary to installation of similar components in other systems.

E. Coordinate installation of system components with installation of mechanical systems equipment such as air handling units and air terminal units.

F. Ensure installation of components is complementary to installation of similar components.

G. Coordinate installation of system components with installation of mechanical systems equipment such as air handling units and air terminal units.

3.02 INSTALLATION

A. Install in accordance with manufacturer's instructions.

B. Check and verify location of thermostats with plans and room details before installation. Locate 60 inches above floor. Align with lighting switches and humidistats; see Section 262726.

C. Mount freeze protection thermostats using flanges and element holders.

D. Mount outdoor reset thermostats and outdoor sensors indoors, with sensing elements outdoors with sun shield.

E. Provide thermostats in aspirating boxes in front entrances.

F. Provide guards on thermostats in where indicated.

G. Provide valves with position indicators and with pilot positioners where sequenced with other controls.

H. Install damper motors on outside of duct in warm areas. Do not install motors in locations at outdoor temperatures.

I. Mount control panels adjacent to associated equipment on vibration free walls or free standing angle iron supports. One cabinet may accommodate more than one system in same equipment room. Provide engraved plastic nameplates for instruments and controls inside cabinet and engraved plastic nameplates on cabinet face.

J. Install "hand/off/auto" selector switches to override automatic interlock controls when switch is in "hand" position.

K. Provide conduit and electrical wiring in accordance with Section 260583. Electrical material and installation shall be in accordance with appropriate requirements of .

L. Control Valve Installation
   1. Slip-stem control valves shall be installed so that the stem position is not more than 60 degrees from the vertical up position. Ball type control valves shall be installed with the stem in the horizontal position.
   2. Valves shall be installed in accordance with the manufacturer's recommendations.
   3. Control valves shall be installed so that they are accessible and serviceable and so that actuators may be serviced and removed without interference from structure or other pipes and/or equipment.
   4. Isolation valves shall be installed so that the control valve body may be serviced without draining the supply/return side piping system. Unions shall be installed at all connections to screw-type control valves.
   5. Provide tags for all control valves indicating service and number. Tags shall be brass, 1.5 inch in diameter, with ¼ inch high letters. Securely fasten with chain and hook. Match identification numbers as shown on approved controls shop drawings.

M. Control Damper Installation
   1. Duct openings shall be free of any obstruction or irregularities that might interfere with blade or linkage rotation or actuator mounting. Duct openings shall measure ¼ in. larger than damper dimensions and shall be square, straight, and level.

2. Individual damper sections, as well as entire multiple section assemblies, must be completely square and free from racking, twisting, or bending. Measure diagonally from upper corners to opposite lower corners of each damper section. Both dimensions must be within 0.3 cm (1/8 in.) of each other.
3. Follow the manufacturer's instructions for field installation of control dampers. Unless specifically designed for vertical blade application, dampers must be mounted with blade axis horizontal.
4. Install extended shaft or jackshaft according to manufacturer’s instructions. (Typically, a sticker on the damper face shows recommended extended shaft location. Attach shaft on labeled side of damper to that blade.)
5. Damper blades, axles, and linkage must operate without binding. Before system operation, cycle damper after installation to ensure proper operation. On multiple section assemblies, all sections must open and close simultaneously.
6. Provide a visible and accessible indication of damper position on the drive shaft end.
7. Support ductwork in area of damper when required to prevent sagging due to damper weight.
8. After installation of low-leakage dampers with seals, caulk between frame and duct or opening to prevent leakage around perimeter of damper.

N. Installation of Sensors
1. Install sensors in accordance with the manufacturer's recommendations.
2. Mount sensors rigidly and adequately for environment within which the sensor operates.
3. Room temperature sensors shall be installed on concealed junction boxes properly supported by wall framing.
4. All wires attached to sensors shall be sealed in their raceways or in the wall to stop air transmitted from other areas from affecting sensor readings.
5. Sensors used in mixing plenums and hot and cold decks shall be of the averaging type. Averaging sensors shall be installed in a serpentine manner vertically across the duct. Each bend shall be supported with a capillary clip.
6. Low-limit sensors used in mixing plenums shall be installed in a serpentine manner horizontally across duct. Each bend shall be supported with a capillary clip. Provide 3 m (1 ft) of sensing element for each 1 m2(1 ft2) of coil area.
7. Do not install temperature sensors within the vapor plume of a humidifier. If installing a sensor downstream of a humidifier, install it at least 3 m (10 ft) downstream.
8. All pipe-mounted temperature sensors shall be installed in wells. Install liquid temperature sensors with heat-conducting fluid in thermal wells.
9. Install outdoor air temperature sensors on north wall, complete with sun shield at designated location.
10. Differential Air Static Pressure.
    a. Supply Duct Static Pressure. Pipe the high-pressure tap to the duct using a pitot tube. Pipe the low-pressure port to a tee in the height-pressure tap tubing of the corresponding building static pressure sensor (if applicable) or to the location of the duct high-pressure tap and leave open to the plenum.
    b. Return Duct Static Pressure. Pipe high-pressure tap to duct using a pitot tube. Pipe the low-pressure port to a tee in the low-pressure tap tubing of the corresponding building static pressure sensor.
    c. Building Static Pressure. Pipe the low-pressure port of the pressure sensor to the static pressure port located on the outside of the building through a high-volume accumulator. Pipe the high-pressure port to a location behind a thermostat cover.
    d. The piping to the pressure ports on all pressure transducers shall contain a capped test port located adjacent to the transducer.
    e. All pressure transducers, other than those controlling VAV boxes, shall be located in field device panels, not on the equipment monitored or on ductwork. Mount transducers in a location accessible for service without use of ladders or special equipment.

f. All air and water differential pressure sensors shall have gauge tees mounted adjacent to the taps. Water gauges shall also have shut-off valves installed before the tee.

11. Smoke detectors, freezestats, high-pressure cut-offs, and other safety switches shall be hard-wired to de-energize equipment as described in the sequence of operation. Switches shall require manual reset. Provide contacts that allow DDC software to monitor safety switch status.
12. Install humidity sensors for duct mounted humidifiers at least 3 m (10 ft) downstream of the humidifier. Do not install filters between the humidifier and the sensor.

O. Flow Switch Installation
1. Use correct paddle for pipe diameter.
2. Adjust flow switch according to manufacturer's instructions.

P. Actuators
1. General. Mount and link control damper actuators according to manufacturer's instructions.
a. To compress seals when spring-return actuators are used on normally closed dampers, power actuator to approximately 5° open position, manually close the damper, and then tighten the linkage.
b. Check operation of damper/actuator combination to confirm that actuator modulates damper smoothly throughout stroke to both open and closed positions.
c. Provide all mounting hardware and linkages for actuator installation.
2. Electric/Electronic
a. Dampers: Actuators shall be direct mounted on damper shaft or jackshaft unless shown as a linkage installation. For low-leakage dampers with seals, the actuator shall be mounted with a minimum 5° travel available for tightening the damper seal. Actuators shall be mounted following manufacturer’s recommendations.
b. Valves: Actuators shall be connected to valves with adapters approved by the actuator manufacturer. Actuators and adapters shall be mounted following the actuator manufacturer's recommendations.

Q. Control Damper Installation
1. Damper submittals shall be coordinated for type, quantity, and size to ensure compatibility with sheet metal design.
2. Duct openings shall be free of any obstruction or irregularities that might interfere with blade or linkage rotation or actuator mounting. Duct openings shall measure ¼ in. larger than damper dimensions and shall be square, straight, and level.
3. Individual damper sections, as well as entire multiple section assemblies, must be completely square and free from racking, twisting, or bending. Measure diagonally from upper corners to opposite lower corners of each damper section. Both dimensions must be within 0.3 cm (1/8 in.) of each other.
4. Follow the manufacturer's instructions for field installation of control dampers. Unless specifically designed for vertical blade application, dampers must be mounted with blade axis horizontal.
5. Install extended shaft or jackshaft according to manufacturer’s instructions. (Typically, a sticker on the damper face shows recommended extended shaft location. Attach shaft on labeled side of damper to that blade.)
6. Damper blades, axles, and linkage must operate without binding. Before system operation, cycle damper after installation to ensure proper operation. On multiple section assemblies, all sections must open and close simultaneously.
7. Provide a visible and accessible indication of damper position on the drive shaft end.
8. Support ductwork in area of damper when required to prevent sagging due to damper weight.

9. After installation of low-leakage dampers with seals, caulk between frame and duct or opening to prevent leakage around perimeter of damper.

END OF SECTION 230913

SECTION 230923
DIRECT-DIGITAL CONTROL SYSTEM FOR HVAC

PART 1 GENERAL

1.01 SECTION INCLUDES

A. Controllers.

B. Power supplies and line filtering.

1.02 RELATED REQUIREMENTS

A. Section 230913 - Instrumentation and Control Devices for HVAC.

B. Section 230993 - Sequence of Operations for HVAC Controls.

C. Section 260583 - Wiring Connections: Electrical characteristics and wiring connections.

1.03 REFERENCE STANDARDS

A. ANSI/CEA 709.1.D - Control Network Protocol Specification.

B. ASHRAE Std 135 - BACnet - A Data Communication Protocol for Building Automation and Control Networks.

C. NFPA 70 - National Electrical Code.

D. UL (DIR) - Online Certifications Directory.

1.04 COODINATION REQUIREMENTS

A. Coordinate with HVAC equipment supplier and system field installer to clarly identify the following components to ensure the entire system meets the design intent:
   1. Interface requirment for HVAC equipment factory provided controllers.
   2. HVAC equipment factory supplied and installed control components.
   3. HVAC equipment factory installed control components.
   4. Field installed components.

1.05 SUBMITTALS

A. See Section 013000 - Administrative Requirements for submittal procedures.

B. Product Data and Shop Drawing: Provide data and shop drawingfor each system hardware, software module and equipment to be installed or provided.
   1. DDC System Hardware
      a. A complete bill of materials to be used indicating quantity, manufacturer, model number, and relevant technical data of equipment to be used.
      b. Manufacturer’s description and technical data such as performance curves, product specifications, and installation and maintenance instructions for items listed below and for relevant items not listed below:
         1) Direct digital controllers (controller panels)
         2) Control panels
         3) Power supplies
         4) Batteries
         5) Operator interface equipment
         6) Wiring
      c. Wiring diagrams and layouts for each control panel. Show termination numbers.
      d. Schematic diagrams for all field sensors and controllers. Provide floor plans of all sensor locations and control hardware. Riser diagrams
   2. Central System Hardware and Software
      a. A complete bill of material of equipment used indicating quantity, manufacturer, model number, and relevant technical.

b. Manufacturer’s description and technical data such as product specifications and installation and maintenance instructions for items listed below and for relevant items furnished under this contract not listed below:
    1) Central Processing Unit (CPU) or web server
    2) Monitors
    3) Keyboards
    4) Power supplies
    5) Battery backups
    6) Interface equipment between CPU or server and control panels
    7) Operating System software
    8) Operator interface software
    9) Color graphic software
    10) Third-party software
c. Schematic diagrams for all control, communication, and power wiring. Provide a schematic drawing of the central system installation. Label all cables and ports with computer manufacturers’ model numbers and functions. Show interface wiring to control system.
d. Network riser diagrams of wiring between central control unit and control panels.
e. Controlled Systems
    1) Riser diagrams showing control network layout, communication protocol, and wire types.
    2) A schematic diagram of each controlled system. The schematics shall have all control points labeled with point names shown or listed. The schematics shall graphically show the location of all control elements in the system.
    3) A schematic wiring diagram of each controlled system. Label control elements and terminals. Where a control element is also shown on control system schematic, use the same name.
    4) An instrumentation list (Bill of Materials) for each controlled system. List each control system element in a table. Show element name, type of device, manufacturer, model number, and product data sheet number.
    5) A mounting, wiring, and routing plan-view drawing. The design shall take into account HVAC, electrical, and other systems’ design and elevation requirements. The drawing shall show the specific location of all concrete pads and bases and any special wall bracing for panels to accommodate this work.
    6) A complete description of the operation of the control system, including sequences of operation. The description shall include and reference a schematic diagram of the controlled system.
    7) A point list for each control system. List I/O points and software points specified in Section 23 09 93. Indicate alarmed and trended points.

3. Quantities of items submitted shall be reviewed but are the responsibility of the Contractor.
4. BACnet Protocol Implementation Conformance Statement (PICS) for each submitted type of controller and operator interface.

C. Manufacturer's Instructions: Indicate manufacturer's installation instructions for all manufactured components.

D. Project Record Documents: Record actual locations of control components, including control units, thermostats, and sensors.
1. Revise shop drawings to reflect actual installation and operating sequences.
2. Include submittals data in final "Record Documents" form.

E. Operation and Maintenance Data:
1. Include interconnection wiring diagrams complete field installed systems with identified and numbered, system components and devices.

2. Include keyboard illustrations and step-by-step procedures indexed for each operator function.
3. Include inspection period, cleaning methods, cleaning materials recommended, and calibration tolerances.

1.06 QUALITY ASSURANCE

A. Perform work in accordance with NFPA 70.

B. Products Requiring Electrical Connection: Listed and classified by UL (DIR) as suitable for purpose specified and indicated.

1.07 OWNERSHIP OF PROPRIETARY MATERIAL

A. Project-specific software and documentation shall become Owner's property. This includes, but is not limited to:
1. Graphics
2. Record drawings
3. Database
4. Application programming code; software.
5. Documentation

1.08 DEFINITION

A. BACnet Interoperability Building Blocks (BIBB): A BIBB defines a small portion of BACnet functionality that is needed to perform a particular task. BIBBS are combined to build the BACnet functional requirements for a device in a specification.

B. BACnet/BACnet Standard: BACnet communication requirements as defined by the latest version of ASHRAE/ANSI 135 and approved addenda.

C. Control Systems Server: A computer(s) that maintain(s) the systems configuration and programming database.

D. Controller: Intelligent stand-alone control device. Controller is a generic reference to building controllers, custom application controllers, and application specific controllers.

E. Direct Digital Control: Microprocessor-based control including Analog/Digital conversion and program logic.

F. Gateway: Bi-directional protocol translator connecting control systems that use different communication protocols.

G. Local Area Network: Computer or control system communications network limited to local building or campus.

H. Master-Slave/Token Passing: Data link protocol as defined by the BACnet standard.

I. Point-to-Point Serial communication as defined in the BACnet standard.

J. Primary Controlling LAN: High speed, peer-to-peer controller LAN connecting BCs and optionally AACs and ASCs. Refer to System Architecture below.

K. Protocol Implementation Conformance Statement: A written document that identifies the particular options specified by BACnet that are implemented in a device.

L. Router: A device that connects two or more networks at the network layer.

M. Wiring: Raceway, fittings, wire, boxes and related items.

PART 2 PRODUCTS

2.01 MANUFACTURERS

A. _____.
1. Local Representative: ACES, Justin Vogt, (314) 722-2727; jmvogt@automaticcontrols.net.

B. Substitutions: See Section 016000 - Product Requirements.

2.02 SYSTEM PERFORMANCE

A. Performance Standards. System shall conform to the following minimum standards over network connections. Systems shall be tested using manufacturer's recommended hardware and software for operator workstation (server and browser for web-based systems).
   1. Graphic Display. A graphic with 20 dynamic points shall display with current data within 10 sec.
   2. Graphic Refresh. A graphic with 20 dynamic points shall update with current data within 8 sec.and shall automatically refresh every 15 sec.
   3. Configuration and Tuning Screens. Screens used for configuring, calibrating, or tuning points, PID loops, and similar control logic shall automatically refresh within 6 sec.
   4. Object Command. Devices shall react to command of a binary object within 2 sec. Devices shall begin reacting to command of an analog object within 2 sec.
   5. Alarm Response Time. An object that goes into alarm shall be annunciated at the workstation within 45 sec.
   6. Program Execution Frequency. Custom and standard applications shall be capable of running as often as once every 5 sec. Select execution times consistent with the mechanical process under control.
   7. Performance. Programmable controllers shall be able to completely execute DDC PID control loops at a frequency adjustable down to once per sec. Select execution times consistent with the mechanical process under control.
   8. Multiple Alarm Annunciation. Each workstation on the network shall receive alarms within 5 sec of other workstations.

2.03 MATERIALS

A. Use new products the manufacturer is currently manufacturing and selling for use in new installations. Do not use this installation as a product test site unless explicitly approved in writing by Owner. Spare parts shall be available for at least five years after completion of this contract.

2.04 COMMUNICATION

A. Control products, communication media, connectors, repeaters, hubs, and routers shall comprise a BACnet internetwork. Controller and operator interface communication shall conform to ANSI/ASHRAE Standard 135, BACnet.

B. Install new wiring and network devices as required to provide a complete and workable control network.

C. Use existing Ethernet backbone for network segments marked "existing" on project drawings.

D. Each controller shall have a communication port for temporary connection to a laptop computer or other operator interface. Connection shall support memory downloads and other commissioning and troubleshooting operations.

E. Internetwork operator interface and value passing shall be transparent to internetwork architecture.
   1. An operator interface connected to a controller shall allow the operator to interface with each internetwork controller as if directly connected. Controller information such as data, status, and control algorithms shall be viewable and editable from each internetwork controller.
   2. Inputs, outputs, and control variables used to integrate control strategies across multiple controllers shall be readable by each controller on the internetwork. Program and test all cross-controller links required to execute control strategies specified in Section 23 09 93. An authorized operator shall be able to edit cross-controller links by typing a standard object address or by using a point-and-click interface.

F. Workstations, Building Control Panels, and Controllers with real-time clocks shall use the BACnet Time Synchronization service. System shall automatically synchronize system clocks daily from an operator-designated device via the internetwork. The system shall automatically adjust for daylight saving and standard time as applicable.

G. System shall be expandable to at least twice the required input and output objects with additional controllers, associated devices, and wiring.

H. System shall support Web services data exchange with any other system that complies with XML (extensible markup language) and SOAP (simple object access protocol) standards specified by the Web Services Interoperability Organization(WS-I) Basic Profile 1.0 or higher. Web services support shall as a minimum be provided at the workstation or web server level and shall enable data to be read from or written to the system.
   1. System shall support Web services read data requests by retrieving requested trend data or point values (I/O hardware points, analog value software points, or binary value software points) from any system controller or from the trend history database.
   2. System shall support Web services write data request to each analog and binary object that can be edited through the system operator interface by downloading a numeric value to the specified object.
   3. For read or write requests, the system shall require user name and password authentication and shall support SSL (Secure Socket Layer) or equivalent data encryption.
   4. System shall support discovery through a Web services connection or shall provide a tool available through the Operator Interface that will reveal the path/identifier needed to allow a third party Web services device to read data from or write data to any object in the system which supports this service.

2.05 CONTROLLERS

A. General:
   1. Provide an adequate number of the following as required to achieve performance specified in Section 23 09 23 Article 2.03 (System Performance):
      a. Building Controllers (BC)
      b. Advanced Application Controllers (AAC)
      c. Application Specific Controllers (ASC)
      d. Smart Actuators (SA)
      e. Smart Sensors (SS)
   2. Every device in the system which executes control logic and directly controls HVAC equipment must conform to a standard BACnet Device profile as specified in ANSI/ASHRAE 135, BACnet Annex L.

B. BACnet.
   1. BCs: Each BC shall conform to BACnet Building Controller (B-BC) device profile as specified in ANSI/ASHRAE 135, BACnet Annex L, and shall be listed as a certified B-BC in the BACnet Testing Laboratories (BTL) Product Listing.
   2. AACs: Each AAC shall conform to BACnet Advanced Application Controller (B-AAC) device profile as specified in ANSI/ASHRAE 135, BACnet Annex L and shall be listed as a certified B-AAC in the BTL Product Listing.
   3. ASCs: Each ASC shall conform to BACnet Application Specific Controller (B-ASC) device profile as specified in ANSI/ASHRAE 135, BACnet Annex L and shall be listed as a certified B-ASC in the BTL Product Listing.
   4. SSs: Each SS shall conform to BACnet Smart Sensor (B-SS) device profile as specified in ANSI/ASHRAE 135, BACnet Annex L and shall be listed as a certified B-SS in the BTL Product Listing.
   5. BACnet Communication.
      a. Each BC shall reside on or be connected to a BACnet network using ISO 8802-3 (Ethernet) Data Link/Physical layer protocol and BACnet/IP addressing.
      b. BACnet routing shall be performed by BCs or other BACnet device routers as necessary to connect BCs to networks of AACs and ASCs.

c. Each AAC shall reside on a BACnet network using ISO 8802-3 (Ethernet) Data Link/Physical layer protocol with BACnet/IP addressing, or it shall reside on a BACnet network using the ARCNET or MS/TP Data Link/Physical layer protocol.
d. Each ASC shall reside on a BACnet network using the ARCNET or MS/TP Data Link/Physical layer protocol.
e. Each SA shall reside on a BACnet network using the ARCNET or MS/TP Data Link/Physical layer protocol.
f. Each SS shall reside on a BACnet network using ISO 8802-3 (Ethernet) Data Link/Physical layer protocol with BACnet/IP addressing, or it shall reside on a BACnet network using ARCNET or MS/TP Data Link/Physical layer protocol.

C. Communication:
1. Service Port:
a. Each controller shall provide a service communication port for connection to a Portable Operator's Terminal.
1) Connection shall be extended to space temperature sensor ports where shown on drawings.
2. Signal Management:
a. BC and ASC operating systems shall manage input and output communication signals to allow distributed controllers to share real and virtual object information and to allow for central monitoring and alarms.
3. Data Sharing:
a. Each BC and AAC shall share data as required with each networked BC and AAC.
4. Stand-Alone Operation:
a. Each piece of equipment specified in Section 23 09 93 shall be controlled by a single controller to provide stand-alone control in the event of communication failure.
b. All I/O points specified for a piece of equipment shall be integral to its controller. Provide stable and reliable stand-alone control using default values or other method for values normally read over the network such as outdoor air conditions, supply air or water temperature coming from source equipment, etc.

D. Environment:
1. Controller hardware shall be suitable for anticipated ambient conditions:
a. Controllers used outdoors or in wet ambient conditions shall be mounted in waterproof enclosures and shall be rated for operation at -20°F to 140°F.
b. Controllers used in conditioned space shall be mounted in dust-protective enclosures and shall be rated for operation at 32°F to 120°F.

E. Keypad and Display:
1. Provide a local keypad and display for each BC and AAC
2. Use for interrogating and editing data.
3. System security password prevents unauthorized use.

F. Real-Time Clock:
1. Controllers that perform scheduling shall have a real-time clock.

G. Serviceability:
1. Diagnostic LEDs for power, communication, and processor.
2. Make all wiring connections to field removable, modular terminal strips, or to a termination card connected by a ribbon cable.
3. Each BC and AAC shall continually check its processor and memory circuit status and shall generate an alarm on abnormal operation.
4. System shall continuously check controller network and generate alarm for each controller that fails to respond.

H. Memory:
1. Controller memory shall support operating system, database, and programming requirements.

2. Each BC and AAC shall retain BIOS and application programming for at least 72 hours in the event of power loss.
3. Each ASC and SA shall use nonvolatile memory and shall retain BIOS and application programming in the event of power loss. System shall automatically download dynamic control parameters following power loss.

I. Immunity to Power and Noise:
1. Maintain operation at 90 to 110 percent of nominal voltage rating.
2. Perform orderly shutdown below 80 percent of nominal voltage.
3. Operation protected against electrical noise of 5 to 120 Hz and from keyed radios up to 5 W. at 3 feet.

J. Transformer:
1. ASC power supply shall be fused or current limiting and shall be rated at a minimum of 125% of ASC power consumption.

2.06 INPUT AND OUTPUT INTERFACE

A. General:
1. Hard-wire input and output points to BCs, AACs, ASCs, or SAs.

B. Protection:
1. All input points and output points shall be protected such that shorting of the point to itself, to another point, or to ground shall cause no damage to the controller.
2. All input and output points shall be protected from voltage up to 24 V of any duration, such that contact with this voltage will cause no controller damage.

C. Binary Inputs.
1. Allow the monitoring of ON/OFF signals from remote devices.
2. Provide a wetting current of at least 12 mA to be compatible with commonly available control devices and shall be protected against contact bounce and noise.
3. Sense dry contact closure without application of power external to the controller.

D. Pulse Accumulation Inputs:
1. Conform to binary input requirements and shall also accumulate up to 10 pulses per second.

E. Analog Inputs:
1. Allow for monitoring low-voltage (0-10 Vdc), current (4-20 mA), or resistance (thermistor or RTD) signals.
2. Compatible with and field configurable to commonly available sensing devices.

F. Binary Outputs:
1. Used for On/Off operation or a pulsed low-voltage signal for pulse width modulation control.
2. On building Controllers, outputs provided with three position (On/Off/Auto) override switches.
3. Status lights for BCs and AACs to be selectable for normally open or normally closed operation.

G. Analog Outputs:
1. Analog outputs shall not drift more than 0.4% of range annually.
2. Monitoring signal provides a 0 to 10 VDC or a 4 to 20 mA output signal for end device control.
3. Each BC and AAC analog output shall have a two-position (auto-manual) switch, a manually adjustable potentiometer for manual override, and status lights.
4. Drift to not exceed 0.4 percent of range per year.

H. Tri-State Outputs:
1. Coordinate two binary outputs to control three point, floating type, electronic actuators without feedback.

2. Limit the use of three point, floating devices to the following zone and terminal unit control applications:
    a. VAV terminal units.
    b. Duct mounted heating coils.
    c. Zone dampers.
    d. Radiation.
3. Control algorithms run the zone actuator to one end of its stroke once every 24 hours for verification of operator tracking.

I. System Object Capacity:
1. System size to be expandable to at keast twice the number of input / output objects required providing additional controllers, including associated devices and wiring as necessary to achieve this capacity requirement.
2. Hardware additions or software revisions for the installed operator interfaces are not to be required for future, system expansions.

2.07 AUXILIARY CONTROL DEVICES

A. Refer to Section 230913 - Instrumentation and Control Devices

2.08 WIRING AND RACEWAYS

A. General. Provide copper wiring, plenum cable, and raceways as specified in applicable sections of Division 26.

B. Insulated wire shall use copper conductors and shall be UL listed for 200°F minimum service.

2.09 FIBER OPTIC CABLE SYSTEM

A. Optical Cable. Optical cables shall be duplex 900 mm tight-buffer construction designed for intra-building environments. Sheath shall be UL listed OFNP in accordance with NEC Article 770. Optical fiber shall meet the requirements of FDDI, ANSI X3T9.5 PMD for 62.5/125mm.

B. Connectors. Field terminate optical fibers with ST type connectors. Connectors shall have ceramic ferrules and metal bayonet latching bodies.

PART 3 EXECUTION

3.01 INSTALLERS

A. Installer List:
1. Automatic Controls Equipment Systems, Inc.http://www.automaticcontrols.net
2. Contact: Justin Vogt at 314-722-2972 or Robert Vogt at 314.722.2971

B. Substitution Limitations: Same as specified for products; see Section 016000 - Product Requirements.

3.02 EXAMINATION

A. Verify existing conditions before starting work.

B. Verify that conditioned power supply is available to the control units and to the operator work station. Verify that field end devices, wiring installed prior to installation proceeding.

C. Examine the drawings and specifications for other parts of the work. If head room or space conditions appear inadequatem, or if any discrepancies occur between the plans and the contractor’s work and the plans and the work of others, report these discrepancies to the Owner and shall obtain written instructions for any changes necessary to accommodate the contractor’s work with the work of others. Any changes in the work covered by this specification made necessary by the failure or neglect of the contractor to report such discrepancies shall be made by and at the expense of the contractor.

3.03 PROTECTION

A. The contractor shall protect all work and material from damage by his/her work or employees and shall be liable for all damage thus caused.

B. The contractor shall be responsible for his/her work and equipment until finally inspected, tested, and accepted. The contractor shall protect any material that is not immediately installed. The contractor shall close all open ends of work with temporary covers or plugs during storage and construction to prevent entry of foreign objects.

3.04 COORDINATION

A. Site
   1. Where the mechanical work will be installed in close proximity to, or will interfere with, work of other trades, the contractor shall assist in working out space conditions to make a satisfactory adjustment. If the contractor installs his/her work before coordinating with other trades, so as to cause any interference with work of other trades, the contractor shall make the necessary changes in his/her work to correct the condition without extra charge.
   2. Coordinate and schedule work with other work in the same area and with work dependent upon other work to facilitate mutual progress.

B. Submittals. See Section 23 09 23 Article 1.10 (Submittals).

C. Test and Balance.
   1. Provide a qualified technician to assist in the test and balance process.

D. Life Safety (By Others).
   1. Duct smoke detectors required for air handler shutdown are provided and controled under Division 28.
   2. Smoke dampers and actuators required for duct smoke isolation are provided under Division 23 and are controled under Division 28.
   3. Fire and smoke dampers and actuators required for fire-rated walls are provided under Division 23. Fire and smoke damper control is provided under Division 28.

E. Coordination with controls specified in other sections or divisions. Other sections and/or divisions of this specification include controls and control devices that are to be part of or interfaced to the control system specified in this section. These controls shall be integrated into the system and coordinated by the contractor as follows:
   1. All communication media and equipment shall be provided as specified in Section 23 09 23 Article 2.2 (Communication).
   2. Each supplier of a controls product is responsible for the configuration, programming, start up, and testing of that product to meet the sequences of operation described in Section 23 09 93.
   3. The contractor shall coordinate and resolve any incompatibility issues that arise between control products provided under this section and those provided under other sections or divisions of this specification.
   4. The contractor is responsible for providing all controls described in the contract documents regardless of where within the contract documents these controls are described.
   5. The contractor is responsible for the interface of control products provided by multiple suppliers regardless of where this interface is described within the contract documents.

3.05 GENERAL WORKMANSHIP

A. Install equipment, piping, and wiring/raceway parallel to building lines (i.e. horizontal, vertical, and parallel to walls) wherever possible.

B. Provide sufficient slack and flexible connections to allow for vibration of piping and equipment.

C. Install equipment in readily accessible locations as defined by Chapter 1 Article 100 Part A of the National Electrical Code (NEC).

D. Verify integrity of all wiring to ensure continuity and freedom from shorts and grounds.

E. All equipment, installation, and wiring shall comply with industry specifications and standards for performance, reliability, and compatibility and be executed in strict adherence to local codes and standard practices.

3.06 FIELD QUALITY CONTROL

A. All work, materials, and equipment shall comply with rules and regulations of applicable local, state, and federal codes and ordinances as identified in Section 23 09 23 Article 1.8 (Codes and Standards).

B. Contractor shall continually monitor the field installation for code compliance and quality of workmanship.

C. Contractor shall have work inspection by local and/or state authorities having jurisdiction over the work.

3.07 EXISTING EQUIPMENT

A. Wiring. Interconnecting control wiring shall be removed and shall become the property of the contractor unless specifically noted or shown to be reused.

B. Local Control Panels. Remove and deliver existing control panels to Owner.

C. Repair. Unless otherwise directed, the contractor is not responsible for repair or replacement of existing energy equipment and systems, valves, dampers, or actuators. Should the contractor find existing equipment that requires maintenance, the engineer is to be notified immediately.

D. Indicator Gauges. Where these devices remain and are not removed, they must be made operational and recalibrated to ensure reasonable accuracy.

E. Room Thermostats. Remove and deliver existing room thermostats to Owner unless otherwise noted. Patch and finish holes and marks left by removal to match existing walls.

F. Electronic Sensors and Transmitters. Remove and deliver existing sensors and transmitters to Owner.

G. Controllers and Auxiliary Electronic Devices. Remove and deliver existing controllers and auxiliary electronic devices to Owner.

H. Damper Actuators, Linkages, and Appurtenances. Remove and deliver existing damper actuators, linkages and appurtenances to Owner.

I. Control Valves. Replace existing control valves with new. Deliver removed control valves to Owner.

J. Control Compressed Air Systems. Replace existing control compressed air systems with new unless otherwise noted. Deliver removed systems to Owner.

K. Existing System Operating Schedule. Existing mechanical system may be disabled during this work.

L. The scheduling of fans through existing or temporary time clocks or control system shall be maintained throughout the DDC system installation

M. Install control panels where shown.

N. Modify existing starter control circuits, if necessary, to provide hand-off-auto control of each controlled starter. If new starters or starter control packages are required, these shall be included as part of this contract.

O. Patch holes and finish to match existing walls.

3.08 WIRING

A. All control and interlock wiring shall comply with national and local electrical codes, and Division 26 of this specification, Where the requirements of this section differ from Division 26, the requirements of this section shall take precedence.

B. All NEC Class 1 (line voltage) wiring shall be UL listed in approved raceway according to NEC and Division 26 requirements.

C. All low-voltage wiring shall meet NEC Class 2 requirements. Low-voltage power circuits shall be subfused when required to meet Class 2 current limit.

D. Where NEC Class 2 (current-limited) wires are in concealed and accessible locations, including ceiling return air plenums, approved cables not in raceway may be used provided that cables are UL listed for the intended application.

E. All wiring in mechanical, electrical, or service rooms - or where subject to mechanical damage - shall be installed in raceway at levels below 3 m (10ft).

F. Do not install Class 2 wiring in raceways containing Class 1 wiring. Boxes and panels containing high-voltage wiring and equipment may not be used for low-voltage wiring except for the purpose of interfacing the two (e.g. relays and transformers).

G. Do not install wiring in raceway containing tubing.

H. Where Class 2 wiring is run exposed, wiring is to be run parallel along a surface or perpendicular to it and neatly tied at 3 m (10 ft) intervals.

I. Where plenum cables are used without raceway, they shall be supported from or anchored to structural members. Cables shall not be supported by or anchored to ductwork, electrical raceways, piping, or ceiling suspension systems.

J. All wire-to-device connections shall be made at a terminal block or terminal strip. All wire-to-wire connections shall be at a terminal block.

K. All wiring within enclosures shall be neatly bundled and anchored to permit access and prevent restriction to devices and terminals.

L. Maximum allowable voltage for control wiring shall be 120 V. If only higher voltages are available, the contractor shall provide step-down transformers.

M. All wiring shall be installed as continuous lengths, with no splices permitted between termination points.

N. Install plenum wiring in sleeves where it passes through walls and floors. Maintain fire rating at all penetrations.

O. Size of raceway and size and type of wire type shall be the responsibility of the contractor in keeping with the manufacturer’s recommendations and NEC requirements, except as noted elsewhere.

P. Include one pull string in each raceway 2.5 cm (1 in.) or larger.

Q. Use color-coded conductors throughout with conductors of different colors.

R. Control and status relays are to be located in designated enclosures only. These enclosures include packaged equipment control panel enclosures unless they also contain Class 1 starters.

S. Conceal all raceways except within mechanical, electrical, or service rooms. Install raceway to maintain a minimum clearance of 15 cm (6 in.) from high-temperature equipment (e.g. steam pipes or flues).

T. Secure raceways with raceway clamps fastened to the structure and spaced according to code requirements. Raceways and pull boxes may not be hung on flexible duct strap or tie rods. Raceways may not be run on or attached to ductwork.

U. Adhere to this specification's Division 26 requirements where raceway crosses building expansion joints.

V. Install insulated bushings on all raceway ends and openings to enclosures. Seal top end of vertical raceways.

W. The contractor shall terminate all control and/or interlock wiring and shall maintain updated (as-built) wiring diagrams with terminations identified at the job site.

X. Flexible metal raceways and liquid-tight flexible metal raceways shall not exceed 1 m (3 ft) in length and shall be supported at each end. Flexible metal raceway less than ½ in. electrical trade size shall not be used. In areas exposed to moisture, including chiller and boiler rooms, liquid-tight, flexible metal raceways shall be used.

Y. Raceway must be rigidly installed, adequately supported, properly reamed at both ends, and left clean and free of obstructions. Raceway sections shall be joined with couplings (according to code). Terminations must be made with fittings at boxes, and ends not terminating in boxes shall have bushings installed.

3.09 COMMUNICATION WIRING

A. The contractor shall adhere to the items listed in the "Wiring" article in Part 3 of the specification.

B. All cabling shall be installed in a neat and workmanlike manner. Follow manufacturer's installation recommendations for all communication cabling

C. Do not install communication wiring in raceways and enclosures containing Class 1 or other Class 2 wiring.

D. Maximum pulling, tension, and bend radius for the cable installation, as specified by the cable manufacturer, shall not be exceeded during installation.

E. Contractor shall verify the integrity of the entire network following cable installation. Use appropriate test measures for each particular cable.

F. When a cable enters or exits a building, a lightning arrestor must be installed between the lines and ground. The lighting arrestor shall be installed according to manufacturer’s instructions.

G. All runs of communication wiring shall be unspliced length when that length is commercially available.

H. All communication wiring shall be labeled to indicate origination and destination data.

I. Grounding of coaxial cable shall be in accordance with NEC regulations article on "Communications Circuits, Cable, and Protector Grounding."

J. BACnet MS/TP communications wiring shall be installed in accordance with ASHRAE/ANSI Standard 135. This includes but is not limited to:
   1. The network shall use shielded, twisted-pair cable with characteristic impedance between 100 and 120 ohms. Distributed capacitance between conductors shall be less than 100 pF per meter (30 pF per foot.)
   2. The maximum length of an MS/TP segment is 1200 meters (4000 ft) with AWG 18 cable. The use of greater distances and/or different wire gauges shall comply with the electrical specifications of EIA-485.
   3. The maximum number of nodes per segment shall be 32, as specified in the EIA 485 standard. Additional nodes may be accommodated by the use of repeaters.
   4. An MS/TP EIA-485 network shall have no T connections.

3.10 FIBER OPTIC CABLE

A. Maximum pulling tensions as specified by the cable manufacturer shall not be exceeded during installation. Post-installation residual cable tension shall be within cable manufacturer's specifications.

B. All cabling and associated components shall be installed in accordance with manufacturers' instructions. Minimum cable and unjacketed fiber bend radii, as specified by cable manufacturer, shall be maintained.

3.11 INSTALLATION

A. Install control units and other hardware in position on permanent walls where not subject to excessive vibration.

B. Install software in control units and in operator work station. Implement all features of programs to specified requirements and appropriate to sequence of operation. Refer to Section 230993.

C. Provide with 120v AC, 15 amp dedicated emergency power circuit to each programmable control unit.

D. Provide conduit and electrical wiring in accordance with Section 260583. Electrical material and installation shall be in accordance with appropriate requirements of .

3.12 MANUFACTURER'S FIELD SERVICES

A. Start and commission systems. Allow sufficient time for start-up and commissioning prior to placing control systems in permanent operation.

3.13 WARNING LABELS

A. Permanent warning labels shall be affixed to all equipment that can be automatically started by the control system.
   1. Labels shall use white lettering (12-point type or larger) on a red background.
   2. Warning labels shall read as follows.

C A U T I O N

THIS EQUIPMENT IS OPERATING UNDER AUTOMATIC CONTROL AND MAY START OR STOP AT ANY TIME WITHOUT WARNING. SWITCH DISCONNECT TO"OFF"POSITION BEFORE SERVICING.

B. Permanent warning labels shall be affixed to all motor starters and control panels that are connected to multiple power sources utilizing separate disconnects.
   1. Labels shall use white lettering (12-point type or larger) on a red background.
   2. Warning labels shall read as follows.

C A U T I O N

THIS EQUIPMENT IS FED FROM MORE THAN ONE POWER SOURCE WITH SEPARATE DISCONNECTS. DISCONNECT ALL POWER SOURCES BEFORE SERVICING.

3.14 IDENTIFICATION OF HARDWARE AND WIRING

A. All wiring and cabling, including that within factory-fabricated panels shall be labeled at each end within 5 cm (2 in.) of termination with control system address or termination number.

B. All pneumatic tubing shall be labeled at each end within 5 cm (2 in.) of termination with a descriptive identifier.

C. Permanently label or code each point of field terminal strips to show the instrument or item served.

D. Identify control panels with minimum 1 cm (½ in.) letters on laminated plastic nameplates.

E. Identify all other control components with permanent labels. All plug-in components shall be labeled such that label removal of the component does not remove the label.

F. Identify room sensors related to terminal boxes or valves with nameplates.

G. Manufacturers' nameplates and UL or CSA labels shall be visible and legible after equipment is installed.

H. Identifiers shall match record documents.

3.15 CONTROLLERS

A. Provide a separate controller for each AHU or other HVAC system. A DDC controller may control more than one system provided that all points associated with the system are assigned to the same DDC controller. Points used for control loop reset, such as outside air or space temperature, are exempt from this requirement.

B. Building Controllers and Custom Application Controllers shall be selected to provide the required I/O point capacity required to monitor all of the hardware points listed in Section 23 09 93 (Sequences of Operation).

3.16 PROGRAMMING

A. Provide sufficient internal memory for the specified sequences of operation and trend logging.

B. Point Naming. Name points as shown on the equipment points list provided with each sequence of operation. See Section 23 09 93 (Sequences of Operation). If character limitations or space restrictions make it advisable to shorten the name, the abbreviations given in Appendix B to Section 23 09 93 may be used. Where multiple points with the same name reside in the same controller, each point name may be customized with its associated Program Object number. For example, "Zone Temp 1" for Zone 1, "Zone Temp 2" for Zone 2.

C. Software Programming.
   1. Provide programming for the system and adhere to the sequences of operation provided. All other system programming necessary for the operation of the system, but not specified in this document, also shall be provided by the contractor. Embed into the control program sufficient comment statements to clearly describe each section of the program. The comment statements shall reflect the language used in the sequences of operation. Use the appropriate technique based on the following programming types:
      a. Text-based:
         1) Must provide actions for all possible situations
         2) Must be modular and structured
         3) Must be commented
      b. Graphic-based:
         1) Must provide actions for all possible situations
         2) Must be documented
      c. Parameter-based:
         1) Must provide actions for all possible situations
         2) Must be documented.

D. Operator Interface.
   1. Standard Graphics. Provide graphics for all mechanical systems and floor plans of the building. This includes each chilled water system, hot water system, chiller, boiler, air handler, and all terminal equipment. Point information on the graphic displays shall dynamically update. Show on each graphic all input and output points for the system. Also show relevant calculated points such as setpoints. As a minimum, show on each equipment graphic the input and output points and relevant calculated points as indicated on the applicable Points List in Section 23 09 93.
   2. The contractor shall provide all the labor necessary to install, initialize, start up, and troubleshoot all operator interface software and its functions as described in this section. This includes any operating system software, the operator interface database, and any third-party software installation and integration required for successful operation of the operator interface.

3.17 CONTROL SYSTEM CHECKOUT AND TESTING

A. Startup Testing. All testing listed in this article shall be performed by the contractor and shall make up part of the necessary verification of an operating control system. This testing shall be completed before the owner’s representative is notified of the system demonstration.
   1. The contractor shall furnish all labor and test apparatus required to calibrate and prepare for service of all instruments, controls, and accessory equipment furnished under this specification.
   2. Verify that all control wiring is properly connected and free of all shorts and ground faults. Verify that terminations are tight.
   3. Enable the control systems and verify calibration of all input devices individually. Perform calibration procedures according to manufacturers’ recommendations.
   4. Verify that all binary output devices (relays, solenoid valves, two-position actuators and control valves, magnetic starters, etc.) operate properly and that the normal positions are correct.

5. Verify that all analog output devices (I/Ps, actuators, etc.) are functional, that start and span are correct, and that direction and normal positions are correct. The contractor shall check all control valves and automatic dampers to ensure proper action and closure. The contractor shall make any necessary adjustments to valve stem and damper blade travel.
6. Verify that the system operation adheres to the sequences of operation. Simulate and observe all modes of operation by overriding and varying inputs and schedules. Tune all DDC loops.
7. Alarms and Interlocks:
    a. Check each alarm separately by including an appropriate signal at a value that will trip the alarm.
    b. Interlocks shall be tripped using field contacts to check the logic, as well as to ensure that the fail-safe condition for all actuators is in the proper direction.
    c. Interlock actions shall be tested by simulating alarm conditions to check the initiating value of the variable and interlock action

3.18 CLEANING

A. The contractor shall clean up all debris resulting from his/her activities daily. The contractor shall remove all cartons, containers, crates, etc., under his/her control as soon as their contents have been removed. Waste shall be collected and placed in a designated location.

B. At the completion of work in any area, the contractor shall clean all work, equipment, etc., keeping it free from dust, dirt, and debris, etc.

C. At the completion of work, all equipment furnished under this section shall be checked for paint damage, and any factory-finished paint that has been damaged shall be repaired to match the adjacent areas. Any cabinet or enclosure that has been deformed shall be replaced with new material and repainted to match the adjacent areas.

3.19 TRAINING

A. Provide training for a designated staff of Owner’s representatives. Training shall be provided via self-paced training, web-based or computer-based training, classroom training, or a combination of training methods.

3.20 CONTROLS COMMUNICATION PROTOCOL

A. General. The electronic controls packaged with this equipment shall communicate with the building direct digital control (DDC) system. The DDC system shall communicate with these controls to read the information and change the control setpoints as shown in the points list, sequences of operation, and control schematics. The information to be communicated between the DDC system and these controls shall be in the standard object format as defined in ANSI/ASHRAE Standard 135 (BACnet). Controllers shall communicate with other BACnet objects on the internetwork using the Read (Execute) Property service as defined in Clause 15.5 of Standard 135.

B. Distributed Processing. The controller shall be capable of stand-alone operation and shall continue to provide control functions if the network connection is lost.

C. I/O Capacity. The controller shall contain sufficient I/ O capacity to control the target system.

D. The Controller shall have a physical connection for a laptop computer or a portable operator’s tool.

E. Environment. The hardware shall be suitable for the anticipated ambient conditions.
    1. Controllers used outdoors and/or in wet ambient conditions shall be mounted within waterproof enclosures and shall be rated for operation at 40°C to 60°C (40°F to 140°F).
    2. Controllers used in conditioned space shall be mounted in dust-proof enclosures and shall be rated for operation at 0°C to 50°C (32°F to 120°F).

F. Serviceability. Provide diagnostic LEDs for power, communication, and processor. All wiring connections shall be made to field removable, modular terminal strips or to a termination card connected by a ribbon cable.

G. Memory. The Controller shall maintain all BIOS and programming information in the event of a power loss for at least 30 days.

H. Power. Controller shall be able to operate at 90% to 110% of nominal voltage rating.

I. Transformer. Power supply for the Controller must be rated at minimum of 125% of ASC power consumption and shall be fused or current limiting type.

3.21 START-UP AND CHECKOUT PROCEDURES

A. Start up, check out, and test all hardware and software and verify communication between all components.
   1. Verify that all control wiring is properly connected and free of all shorts and ground faults. Verify that terminations are tight.
   2. Verify that all analog and binary input/output points read properly.
   3. Verify alarms and interlocks.
   4. Verify operation of the integrated system.

3.22 SEQUENCES OF OPERATION

A. See Section 230993 - Sequences of Operation, With Points Lists.

END OF SECTION 230923

SECTION 230993
SEQUENCE OF OPERATIONS FOR HVAC CONTROLS

PART 1 GENERAL

1.01 SECTION INCLUDES

A. This section defines the manner and method by which controls function. Requirements for each type of control system operation are specified. Equipment, devices, and system components required for control systems are specified in other sections.

B. Sequence of operation for:
   1. Air terminal units.
   2. VAV Rooftop unit/AHU

1.02 RELATED REQUIREMENTS

A. Section 230913 - Instrumentation and Control Devices for HVAC.

B. Section 230923 - Direct-Digital Control System for HVAC.

1.03 SUBMITTALS

A. See Section 013000 - Administrative Requirements for submittal procedures.

B. Submit all submittal documents listed in this Section under Section 230923 - Direct-Digital Control System for HVAC.

C. Sequence of Operation Documentation: Submit written sequence of operation for entire HVAC system and each piece of equipment.
   1. Preface: 1 or 2 paragraph overview narrative of the system describing its purpose, components and function.
   2. State each sequence in small segments and give each segment a unique number for referencing in Functional Test procedures; provide a complete description regardless of the completeness and clarity of the sequences specified in Contract Documents.
   3. Include at least the following sequences:
      a. Start-up.
      b. Warm-up mode.
      c. Normal operating mode.
      d. Unoccupied mode.
      e. Shutdown.
      f. Capacity control sequences and equipment staging.
      g. Temperature and pressure control, such as setbacks, setups, resets, etc.
      h. Detailed sequences for all control strategies, such as economizer control, optimum start/stop, staging, optimization, demand limiting, etc.
      i. Effects of power or equipment failure with all standby component functions.
      j. Sequences for all alarms and emergency shut downs.
      k. Seasonal operational differences and recommendations.
      l. Interactions and interlocks with other systems.
   4. Include initial and recommended values for all adjustable settings, setpoints and parameters that are typically set or adjusted by operating staff; and any other control settings or fixed values, delays, etc. that will be useful during testing and operating the equipment.
   5. For packaged controlled equipment, include manufacturer's furnished sequence of operation amplified as required to describe the relationship between the packaged controls and the control system, indicating which points are adjustable control points and which points are only monitored.
   6. Include schedules, if known.

D. Control System Diagrams: Submit graphic schematic of the control system showing each control component and each component controlled, monitored, or enabled.

1. Label with settings, adjustable range of control and limits.
2. Include flow diagrams for each control system, graphically depicting control logic.
3. Include the system and component layout of all equipment that the control system monitors, enables or controls, even if the equipment is primarily controlled by packaged or integral controls.
4. Include draft copies of graphic displays indicating mechanical system components, control system components, and controlled function status and value.
5. Include all monitoring, control and virtual points specified in elsewhere.
6. Include a key to all abbreviations.

E. Points List: Submit list of all control points indicating at least the following for each point.
1. Name of controlled system.
2. Point abbreviation.
3. Point description; such as dry bulb temperature, airflow, etc.
4. Display unit.
5. Control point or setpoint (Yes / No); i.e. a point that controls equipment and can have its setpoint changed.
6. Monitoring point (Yes / No); i.e. a point that does not control or contribute to the control of equipment but is used for operation, maintenance, or performance verification.
7. Intermediate point (Yes / No); i.e. a point whose value is used to make a calculation which then controls equipment, such as space temperatures that are averaged to a virtual point to control reset.
8. Calculated point (Yes / No); i.e. a “virtual” point generated from calculations of other point values.

F. Project Record Documents: Record actual locations of components and setpoints of controls, including changes to sequences made after submission of shop drawings.

PART 2 PRODUCTS - NOT USED

PART 3 EXECUTION

3.01 VAV ROOFTOP UNIT/AHU, DX OR CHILLED WATER COOLING, NATURAL GAS OR ELECTRIC OR WATER HEATING

A. Run Conditions - Scheduled:
1. The unit shall run based upon an operator adjustable schedule.
2. When the unit is OFF:
   a. Outside air damper: Fully closed.
   b. Relief air damper: Fully closed.
   c. Return air damper: Fully open.
   d. Supply fans: Off
   e. Return/Relief Fan, as applicable: Off
3. When the unit is ON at Occupied Mode, 5 minutes delay open the outside air damper to its minimum air flow position after start the supply, and return/relief fans as applicable.
4. Maintain OA damper closed at Morning Warm Up, and Unoccupied Modes.
5. During unoccupied mode, the unit shall run when:
   a. 20% zones call for cooling.
   b. Any zone calls for heating.

B. AHU Optimal Start:
1. The unit shall start prior to scheduled occupancy based on the time necessary for the zones to reach their occupied setpoints. The start time shall automatically adjust based on changes in outside air temperature and zone temperatures.

C. Supply Fan:
1. The supply fan shall run anytime when the unit is commanded to run, unless shutdown on safeties. To prevent short cycling, the supply fan shall have a user definable (adj.) minimum runtime.

2. Alarms shall be provided as follows:
    a. Supply Fan Failure: Commanded on, but the status is off.
    b. Supply Fan in Hand: Commanded off, but the status is on.
    c. Supply Fan Runtime Exceeded: Status runtime exceeds a user definable limit (adj.).

D. Supply Air Duct Static Pressure Control:
1. The controller shall measure duct static pressure and modulate the supply fan VFD speed to maintain a duct static pressure setpoint. The speed shall not drop below 30% (adj.). The static pressure setpoint shall be reset based on zone cooling requirements.
    a. The initial duct static pressure setpoint shall be in 1.0 inch H2O (adj.).
    b. As cooling demand increases, the setpoint shall incrementally reset up to a maximum of in 1.5 inch H2O (adj.).
    c. As cooling demand decreases, the setpoint shall incrementally reset down to a minimum of in 0.5 inch H2O (adj.).
    d. Adjust the setpoint per final testing and balancing result.
2. Alarms shall be provided as follows:
    a. High Supply Air Static Pressure: If the supply air static pressure is 25% (adj.) greater than setpoint.
    b. Low Supply Air Static Pressure: If the supply air static pressure is 25% (adj.) less than setpoint.
    c. Supply Fan VFD Fault.

E. Exhaust Fan:
1. The exhaust fan shall run whenever the supply fan runs.
2. The exhaust fans speed shall be synchronized with the supply fans speed.
3. Alarms shall be provided as follows:
    a. Exhaust Fan Failure: Commanded on, but the status is off.
    b. Exhaust Fan in Hand: Commanded off, but the status is on.
    c. Exhaust Fan Runtime Exceeded: Status runtime exceeds a user definable limit (adj.).
    d. Exhaust Fan VFD Fault.

F. Building Static Pressure Control:
1. The controller shall measure building static pressure and modulate the return fan VFD speed to maintain a building static pressure setpoint of in 0.05 inch H2O (adj.). The return fan VFD speed shall not drop below 30% (adj.).
2. Alarms shall be provided as follows:
    a. High Building Static Pressure: If the building air static pressure is 25% (adj.) greater than setpoint.
    b. Low Building Static Pressure: If the building air static pressure is 25% (adj.) less than setpoint.

G. Heat Recovery Wheel - Constant Speed:
1. The controller shall run the heat recovery wheel for energy recovery as follows.
    a. Cooling Recovery Mode:
        1) The controller shall measure the heat wheel discharge air temperature and run the heat wheel to maintain a setpoint 2°F (adj.) less than the unit supply air temperature setpoint. The heat wheel shall run for cool recovery whenever:
            (a) The unit return air temperature is 5°F (adj.) or more below the outside air temperature.
            (b) AND the unit is in a cooling mode.
            (c) AND the economizer (if present) is off.
            (d) AND the supply fan is on.
    b. Heating Recovery Mode:
        1) The controller shall measure the heat wheel discharge air temperature and run the heat wheel to maintain a setpoint 2°F (adj.) greater than the unit supply air temperature setpoint. The heat wheel shall run for heat recovery whenever:

(a) The unit return air temperature is 5°F (adj.) or more above the outside air temperature.
(b) AND the unit is in a heating mode.
(c) AND the economizer (if present) is off.
(d) AND the supply fan is on.

2. Periodic Self-Cleaning:
   a. The heat wheel shall run for 20 sec (adj.) every 24 hr (adj.) the unit runs.
3. Frost Protection:
   a. The heat wheel shall run for 20 sec (adj.) every 600 sec (adj.) whenever:
      1) Outside air temperature drops below 15°F (adj.)
      2) OR the exhaust air temperature drops below 20°F (adj.).
4. The heat wheel bypass dampers will open whenever the heat wheel is disabled.
5. Alarms shall be provided as follows:
   a. Heat Wheel Rotation Failure: Commanded on, but the status is off.
   b. Heat Wheel in Hand: Commanded off, but the status is on.
   c. Heat Wheel Runtime Exceeded: Status runtime exceeds a user definable limit (adj.).

H. Supply Air Temperature Setpoint - Optimized:
1. The controller shall monitor the supply air temperature and shall maintain a supply air temperature setpoint reset based on zone cooling and heating requirements
2. The supply air temperature setpoint shall be reset for cooling based on zone cooling requirements as follows:
   a. Occupied Cooling Mode:
      1) When outside air dewpoint is above 56 °F (adj.):
         (a) Supply air temperature setpoint shall be 55°F (adj.)
      2) When outside air dewpoint is at or below 56 °F (adj.):
         (a) The initial supply air temperature setpoint shall be 60°F (adj.).
         (b) As cooling demand increases, the setpoint shall incrementally reset down to a minimum of 55°F (adj.).
         (c) As cooling demand decreases, the setpoint shall incrementally reset up to a maximum of 65°F (adj.).
   b. Unoccupied Cooling Mode:
      1) Supply air temperature shall be at 65 °F (adj.).
      2) Modulate cooling valve to maintain the supply air temperature cooling set point.
   c. Preheating Mode:
      1) When mixing air temperature is below 52 °F (adj.), modulate heating coil valve to maintain supply air temperature at set point 60 °F (adj.).

I. Cooling Mode:
1. The cooling shall be enabled whenever:
   a. Outside air temperature is greater than 55°F (adj.).
   b. AND the supply fan status is on.
   c. AND the heating (if present) is not active.
2. Modulate cooling valve to maintain the supply air temperature cooling set point.

J. Preheating Mode:
1. The preheating shall be enabled whenever:
   a. Mixing air temperature is less than 52°F (adj.).
   b. AND the supply fan status is on.
   c. AND the cooling is Off.
   d. AND economizer is disabled.
2. Modulate preheating valve to maintain the supply air temperature cooling set point.

K. Alarms shall be provided as follows:
1. High Supply Air Temp: If the supply air temperature is 5°F (adj.) greater than setpoint.

2. Low Supply Air Temp: If the supply air temperature is 5°F (adj.) less than setpoint.

L. Economizer:
1. The controller shall measure the mixed air temperature and modulate the economizer dampers in sequence to maintain a setpoint 2°F (adj.) less than the supply air temperature setpoint. The outside air dampers shall maintain a minimum adjustable position of 20% (adj.) open whenever occupied.
2. The economizer shall be enabled whenever:
   a. The outside air enthalpy is less than 27 Btu/lb (adj.) (Enthalpy of 75°F DB / 50%RH is 28.1 Btu/lb; 55°F DB / 100%RH is 23.2 Btu/lb)
   b. AND the supply fan status is ON (both occupied mode and unoccupied mode)
   c. AND the supply fan status is on.
3. The economizer shall close whenever:
   a. Mixed air temperature drops from 40°F to 35°F (adj.)
   b. OR the freezestat (if present) is on.
   c. OR on loss of supply fan status.
4. Modulate mixed air damper to maintain the supply air temperature setpoint described in paragraph Supply Air Temperature Setpoint - Optimized.
   a. When the economizer is at 100% open and is insufficient to maintain the Supply Air Temperature Setpoint, modulate chilled water valve to maintain the Supply Air Temperature.
5. Economizer shall be applied to both occupied mode and unoccupied mode.

M. Minimum Outside Air Ventilation - Carbon Dioxide (CO2) Control:
1. BAS shall monitor all zone CO2 sensors. The CO2 sensors shall control the Outside Air Ventilation between System Maximum Ventilation and System Minimum Ventilation to maintain all zone CO2 concentration within 1100 PPM.
2. Normal Mode:
   a. When all zone CO2 sensor readings are below setpoint, 750 PPM (adj.). The AHU OA damper shall be modulated to close with a time delay ramp that gradually goes from System Maximum Ventilation position to System Minimum Ventilation position over a 20 minute period.
      1) During this time, if any zone CO2 reaches 900 ppm, the OA damper shall remain at the present position.
      2) When any zone CO2 reaches 1100 ppm, the AHU/RTU shall goes to DVC Mode.
3. DVC Mode:
   a. DVC Control shall be activated when:
      1) any zone CO2 sensor is over setpoint, 1100 PPM (adj.).
      2) And its VAV box is at minimum cooling CFM or above for at least 5 minimums (adj..) at cooling mode,
      3) Or VAV box is at heating CFM for at least 5 minimums (adj.) at heating mode.
   b. The OA damper shall be modulated open with a time delay ramp that gradually goes from System Minimum Ventilation position to System Maximum Ventilation position over a 20 minute period.
      1) During this time, if all zone CO2 drops below 750 ppm, the AHU/RTU shall return to Normal Mode.
4. DDC controller shall monitor the total supply air CFM that shall never drop below 30% setpoint (adj.). Open each VAV up to 30% for proper supply fan operation at minimum fan air flow condition.
5. Alarms shall be provided as follow:
   a. High Zone Carbon Dioxide Concentration: any zone CO2 concentration is greater than 1400 ppm (adj.).

N. Mixed Air Temperature:

1. The controller shall monitor the mixed air temperature and use as required for economizer control (if present) and preheating control (if present).

O. ReturnAir Humidity:
   1. The controller shall monitor the return air humidity and use as required for economizer control (if present) or humidity control (if present).

P. Return Air Temperature:
   1. The controller shall monitor the air temperature and use as required for setpoint control or economizer control (if present).

Q. Supply Air Temperature:
   1. The controller shall monitor the supply air temperature.
   2. Alarms shall be provided as follows:
      a. High Supply Air Temp: If the supply air temperature is greater than 75°F (adj.), except in morning warm up mode.
      b. Low Supply Air Temp: If the supply air temperature is less than 45°F (adj.).

R. OA Flow Station:
   1. BAS shall monitor the CFM of OA Flow Station.
   2. Alarms shall be provided as follows:
      a. High OA CFM: If OA CFM is 15% greater than setpoint (adj.).
      b. Low OA CFM: If OA CFM is 15% less than setpoint (adj.).

3.02 TERMINAL AIR UNITS

A. Run Conditions - Scheduled:
   1. The unit shall run according to a user definable time schedule in the following modes:
      a. Occupied Mode: The unit shall maintain
         1) A 75°F (adj.) cooling setpoint
         2) A 70°F (adj.) heating setpoint.
      b. Unoccupied Mode (night setback): The unit shall maintain
         1) A 82°F (adj.) cooling setpoint.
         2) A 60°F (adj.) heating setpoint.
   2. Alarms shall be provided as follows:
      a. High Zone Temp: If the zone temperature is greater than the cooling setpoint by 5°F (adj.).
      b. Low Zone Temp: If the zone temperature is less than the heating setpoint by 5°F (adj.).

B. Zone Setpoint Adjuster:
   1. The occupant shall be able to adjust the zone temperature heating and cooling setpoints at the zone sensor.

C. Zone Optimal Start:
   1. The unit shall use an optimal start algorithm for morning start-up. This algorithm shall minimize the unoccupied warm-up or cool-down period while still achieving comfort conditions by the start of scheduled occupied period.

D. Zone Unoccupied Override (Selected Zone as Indicated on Drawing, if applicable):
   1. A timed local override control shall allow an occupant to override the schedule and place the unit into an occupied mode for an adjustable period of time. At the expiration of this time, control of the unit shall automatically return to the schedule.

E. Reversing Variable Volume Terminal Unit - Flow Control:
   1. Occupied Cooling Mode:
      a. Zone damper shall be modulating between maximum occupied CFM (adj.) and minimum occupied CFM (adj.) to maintain the zone cooling temperature setpoint.

b. When space temperature is within the dead band (setpoint +- 1, adj.), the respective zone VAV shall remain at current CFM setpoint to provide matching demand cooling capacity.

2. Occupied Reheating Mode:
   a. Conditions to enable the unoccupied reheating mode:
      1) OA temperature > 60°F, adj., and
      2) the zone CFM reaches cooling minimum set point, and
      3) space temperature is below its heating setpoint
   b. The VAV CFM shall remain at cooling minimum set point.
   c. The heating water valve shall modulate to maintain the zone heating temperature setpoint.
   d. The discharge air temperature shall be at 70°F (adj.) or below depending the heating water valve position that can satisfy the zone heating temperature setpoint.
   e. When zone temperature is within the dead band (setpoint +- 1, adj.), the zone damper and heating valve shall remain at current positions to provide matching demand capacity.
   f. Alarms shall be provided when: the discharge air temperature is above 75°F (adj.)
      1) the discharge air temperature is above 75°F (adj.)
3. Occupied Heating Mode (When OA temperature <= 60°F):
   a. Conditions to enable the unoccupied reheating mode:
      1) OA temperature <= 60°F, and
      2) zone CFM reaches cooling minimum set point, and
      3) zone temperature is below its heating setpoint.
   b. VAV shall operate with the following sequences:
      1) The zone CFM shall remain at cooling minimum set point initially.
      2) The heating water valve shall modulate to maintain the zone heating temperature setpoint;
      3) The discharge air temperature shall be at or below the designed heating discharge air temperature, depending on the position that can satisfy the zone heating temperature set point.
      4) When the discharge air temperature reaches the maximum design discharge air temperature and zone temperature is still below the zone heating setpoint:
         (a) Modulate VAV air damper and gradually increase the CFM up to Maximum heating CFM to maintain the zone heating temperature.
         (b) Modulating the heating control valve to maintain the maximum design heating discharge air temperature.
   c. When zone temperature is within the dead band (setpoint +- 1, adj.), the VAV CFM and heating valve shall remain at current positions to provide matching demand capacity.
   d. Reverse the cycle above when zone temperature is above zone heating setpoint.
4. Occupied - CO2 Ventilation (OA CFM) Control:
   a. When individual zone CO2 level is below setpoint (900 PPM, adj.), zone CFM is allowed to go down to 15% (adj.) of design full flow of cooling to satisfy the zone temperature setpoint.
   b. When individual zone CO2 level is between 900 PPM, adj. to 1100 PPM:
      1) The CO2 sensor shall override the temperature sensor to remain zone CFM at current CFM to maintain the zone CO2 level.
      2) Enable the heating or the reheating mode, as needed, to satisfy the zone heating temperature setpoint.
   c. When individual CO2 sensor is above its setpoint, 1100 PPM (adj.), the CO2 sensor shall override the temperature sensor to increase the zone CFM gradually to maintain zone CO2 level at 1100 PPM:
      1) At heating mode, increase the zone CFM up to design heating CFM.

2) At cooling or reheat Mode, increase the zone CFM up to design cooling CFM
3) Enable heating or reheating mode as needed to stratify the zone heating temperature setpoint.

5. Unoccupied Mode:
   a. Unoccupied Cooling Mode:
      1) (When 20% (adj.) of zones call for cooling, AHU/RTU shall be enabled. Set AHU discharge air temperature at 65 F degree , adj during unoccupied mode - Refer AHU/RTU operating sequence.)
      2) Zone damper shall be modulated to maintain the zone unoccupied cooling temperature setpoint.
      3) Turn off AHU/RTU when < 15% (adj.) of zones calls for cooling.
   b. Unoccupied Heating Mode:
      1) (When any zone calls for heating, AHU or RTU shall be enabled. Maintain AHU discharge air temperature 60 f degree or above; remain AHU heating off when return air temperature is 60 f degree or above. Refer to AHU/RTU sequence of operation.)
      2) The zone heating CFM shall remain at minimum heating CFM initially.
      3) The zone heating valve shall modulate to satisfy the zone heating temperature setpoint. The discharge air temperature shall be up to designed heating discharge air temperature.
      4) After zone discharge air temperature reaches maximum heating discharge temperature and the zone continues calling for heating:
         (a) Modulate zone damper up to designed maximum heating cfm to maintain zone heating temperature setpoint.
         (b) Modulate zone heating water valve to maintain the designed discharge air temperature.
      5) Reverse the cycle above when the zone temperature is above unoccupied zone heating setpoint.
      6) Turn off AHU/RTU when all zone CFM is at minimum position and heating valve is fully closed.

F. Discharge Air Temperature:
   1. Alarms shall be provided as follows:
      a. High Discharge Air Temp: If the discharge air temperature is greater than 5°F (adj.) above setpoint.
      b. Low Discharge Air Temp: If the discharge air temperature is less than 5°F (adj.) below setpoint.

G. The controller shall monitor the zone discharge air temperature, zone CFM, zone heating valve position, zone temperature; and display them on VAV graphic. Display AHU/RTU discharge air temperature as VAV inlet air temperature on VAV graphic

3.03 EXHAUST FANS

A. Run Conditions - Scheduled:
   1. The fan shall run according to a defined air handling equipment schedule.

B. Fan Status:
   1. The controller shall monitor the fan status.

C. Alarms shall be provided as follows:
   1. Fan Failure: Commanded on, but the status is off.
   2. Fan in Hand: Commanded off, but the status is on.

END OF SECTION 230993

SECTION 232113
HYDRONIC PIPING

PART 1 GENERAL

1.01 SECTION INCLUDES

A. Hydronic system requirements.

B. Heating water and glycol piping, above grade.

C. Chilled water piping, above grade.

D. Equipment drains and overflows.

E. Pipe hangers and supports.

F. Unions, flanges, mechanical couplings, and dielectric connections.

G. Valves:
   1. Globe or angle valves.
   2. Ball valves.
   3. Butterfly valves.
   4. Check valves.

H. Flow controls.

1.02 RELATED REQUIREMENTS

A. Section 083100 - Access Doors and Panels.

B. Section 099123 - Interior Painting.

C. Section 230516 - Expansion Fittings and Loops for HVAC Piping.

D. Section 230548 - Vibration and Seismic Controls for HVAC.

E. Section 230553 - Identification for HVAC Piping and Equipment.

F. Section 230719 - HVAC Piping Insulation.

G. Section 232114 - Hydronic Specialties.

H. Section 232500 - HVAC Water Treatment: Pipe cleaning.

1.03 REFERENCE STANDARDS

A. ASME B16.3 - Malleable Iron Threaded Fittings: Classes 150 and 300.

B. ASME B16.18 - Cast Copper Alloy Solder Joint Pressure Fittings.

C. ASME B16.22 - Wrought Copper and Copper Alloy Solder-Joint Pressure Fittings.

D. ASME B31.9 - Building Services Piping.

E. ASME BPVC-IX - Boiler and Pressure Vessel Code, Section IX - Qualification Standard for Welding, Brazing, and Fusing Procedures; Welders; Brazers; and Welding, Brazing, and Fusing Operators.

F. ASTM A53/A53M - Standard Specification for Pipe, Steel, Black and Hot-Dipped, Zinc-Coated, Welded and Seamless.

G. ASTM A106/A106M - Standard Specification for Seamless Carbon Steel Pipe for High-Temperature Service.

H. ASTM A123/A123M - Standard Specification for Zinc (Hot-Dip Galvanized) Coatings on Iron and Steel Products.

I. ASTM A183 - Standard Specification for Carbon Steel Track Bolts and Nuts.

J. ASTM A234/A234M - Standard Specification for Piping Fittings of Wrought Carbon Steel and Alloy Steel for Moderate and High Temperature Service.

K. ASTM A536 - Standard Specification for Ductile Iron Castings.

L. ASTM B32 - Standard Specification for Solder Metal.

M. ASTM B88 - Standard Specification for Seamless Copper Water Tube.

N. ASTM B88M - Standard Specification for Seamless Copper Water Tube (Metric).

O. ASTM D1785 - Standard Specification for Poly(Vinyl Chloride) (PVC) Plastic Pipe, Schedules 40, 80, and 120.

P. ASTM D2000 - Standard Classification System for Rubber Products in Automotive Applications.

Q. ASTM D2241 - Standard Specification for Poly(Vinyl Chloride) (PVC) Pressure-Rated Pipe (SDR Series).

R. ASTM D2466 - Standard Specification for Poly(Vinyl Chloride) (PVC) Plastic Pipe Fittings, Schedule 40.

S. ASTM D2467 - Standard Specification for Poly(Vinyl Chloride) (PVC) Plastic Pipe Fittings, Schedule 80.

T. ASTM D2855 - Standard Practice for the Two-Step (Primer and Solvent Cement) Method of Joining Poly (Vinyl Chloride) (PVC) or Chlorinated Poly (Vinyl Chloride) (CPVC) Pipe and Piping Components with Tapered Sockets.

U. ASTM F708 - Standard Practice for Design and Installation of Rigid Pipe Hangers.

V. ASTM F1476 - Standard Specification for Performance of Gasketed Mechanical Couplings for Use in Piping Applications.

W. AWS D1.1/D1.1M - Structural Welding Code - Steel.

X. AWWA C606 - Grooved and Shouldered Joints.

Y. MSS SP-58 - Pipe Hangers and Supports - Materials, Design, Manufacture, Selection, Application, and Installation.

Z. See Section 013000 - Administrative Requirements for submittal procedures.

AA. Product Data:
1. Include data on pipe materials, pipe fittings, valves, and accessories.
2. Show grooved joint couplings, fittings, valves, and specialties on drawings and product submittals, specifically identified with the manufacturer's style or series designation.
3. A distributor's representative is not considered qualified to perform the training.

1.04 DELIVERY, STORAGE, AND HANDLING

A. Accept valves on site in shipping containers with labeling in place. Inspect for damage.

B. Provide temporary protective coating on cast iron and steel valves.

C. Provide temporary end caps and closures on piping and fittings. Maintain in place until installation.

D. Protect piping systems from entry of foreign materials by temporary covers, completing sections of the work, and isolating parts of completed system.

1.05 FIELD CONDITIONS

A. Do not install underground piping when bedding is wet or frozen.

PART 2 PRODUCTS

2.01 HYDRONIC SYSTEM REQUIREMENTS

A. Comply with ASME B31.9 and applicable federal, state, and local regulations.

B. Piping: Provide piping, fittings, hangers, and supports as required, as indicated, and as follows:
1. Where more than one piping system material is specified, provide joining fittings that are compatible with piping materials and ensure that the integrity of the system is not jeopardized.
2. Use non-conducting dielectric connections whenever jointing dissimilar metals.

3. Grooved mechanical joints may be used in accessible locations only.
    a. Accessible locations include those exposed on interior of building, in mechanical rooms, and above ground outdoors.
    b. Grooved mechanical connections and joints comply with AWWA C606.
        1) Ductile Iron: Comply with ASTM A536, Grade 65-45-12.
        2) Steel: Comply with ASTM A106/A106M, Grade B or ASTM A53/A53M.
    c. Use rigid joints unless otherwise indicated.
    d. Use flexible joints at pump connections.
        1) Depending on pipe size, three or four flexible joints may be used in lieu of a flexible connector.
            (a) Piping size 3" and under: three flexible joints
            (b) Piping size 4" and over: four flexible joints
    e. Use gaskets of molded synthetic rubber with central cavity, pressure responsive configuration and complying with ASTM D2000, Grade 2CA615A15B44F17Z for circulating medium up to maximum 250 degrees F or Grade M3BA610A15B44Z for circulating medium up to maximum 200 degrees F.
    f. Provide steel coupling nuts and bolts complying with ASTM A183.
4. Provide pipe hangers and supports in accordance with ASME B31.9 or MSS SP-58 unless indicated otherwise.

C. Pipe-to-Valve and Pipe-to-Equipment Connections: Use flanges, unions, or grooved couplings to allow disconnection of components for servicing; do not use direct welded, soldered, or threaded connections.

D. Valves: Provide valves where indicated on drawings:
1. Provide drain valves where indicated, and if not indicated provide at least at main shut-off, low points of piping, bases of vertical risers, and at equipment. Use 3/4 inch ball valves with hose end and cap, or pipe to nearest floor drain as indicated on drawing.
2. On discharge of hydronic pumps, use spring loaded check valves.
3. Isolate equipment:
    a. Piping 2" or under: using ball valves with union or grooved mechanical couplings
    b. Piping 2-1/2": using butterfly valves with lug end flanges or grooved mechanical couplings
4. For throttling, bypass, or manual flow control services, use the following valves.
    a. 2" and under: Ball valve.
    b. 2-1/2" and over: Globe or butterfly valve.
5. For throttling and isolation service in chilled and condenser water systems, use only butterfly valves.
6. In heating water, chilled water, or condenser water systems, butterfly valves may be used interchangeably with globe valves.
7. For shut-off and to isolate parts of systems or vertical risers, use the following valves.
    a. 2" and under: Ball valve.
    b. 2-1/2" and over: Globe or butterfly valve.

E. Welding Materials and Procedures: Comply with ASME BPVC-IX.

2.02 HEATING WATERWITH OR WITHOUT GLYCOL PIPING, ABOVE GRADE

1. Threaded Joints: ASME B16.3, malleable iron fittings.
    a. Do not use in inaccessible concealed area.
2. Grooved Joints: AWWA C606 grooved pipe, fittings of same material, and mechanical couplings.
    a. Do not use in inaccessible concealed area.

B. Copper Tube: ASTM B88 (ASTM B88M), Type L (B), hard drawn, using one of the following joint types:
    a. Manufacturers:
        1) Grinnell Products, a Tyco Business: www.grinnell.com.

2) Viega LLC: www.viega.com.
3) Substitutions: See Section 016000 - Product Requirements.

2.03 CHILLED WATER PIPING, ABOVE GRADE

A. Steel Pipe: ASTM A53/A53M, Schedule 40, black; using one of the following joint types:
1. Welded Joints: ASTM A234/A234M, wrought steel welding type fittings; AWS D1.1/D1.1M welded.
2. Threaded Joints: ASME B16.3, malleable iron fittings.
a. Do not use in inaccessible concealed area.
3. Grooved Joints: AWWA C606 grooved pipe, fittings of same material, and mechanical couplings.
a. Do not use in inaccessible concealed area.

2.04 EQUIPMENT DRAINS AND OVERFLOWS

A. Steel Pipe: ASTM A53/A53M, Schedule 40 galvanized; using one of the following joint types:
1. Threaded Joints: Galvanized cast iron, or ASME B16.3 malleable iron fittings.

B. Copper Tube: ASTM B88 (ASTM B88M), Type M (C), drawn; using one of the following joint types:
1. Solder Joints: ASME B16.18 cast brass/bronze or ASME B16.22 solder wrought copper fittings; ASTM B32 lead-free solder, HB alloy (95-5 tin-antimony) or tin and silver.

C. PVC Pipe: ASTM D1785, Schedule 40, or ASTM D2241, SDR 21 or 26.
1. Fittings: ASTM D2466 or D2467, PVC.
2. Joints: Solvent welded in accordance with ASTM D2855.
3. Application: For outdoor on roof only, unless indicated on drawings otherwise.
a. Do not install in plenum area whether it is return air plenum or non-return air plenum! Do not install in rated wall!

2.05 PIPE HANGERS AND SUPPORTS

A. Provide hangers and supports that comply with MSS SP-58.
1. If type of hanger or support for a particular situation is not indicated, select appropriate type using MSS SP-58 recommendations.
2. Hangers for Cold Pipe Sizes 2 Inches and Greater: Carbon steel, adjustable, clevis.
3. Hangers for Hot Pipe Sizes 2 to 4 Inches: Carbon steel, adjustable, clevis.
4. Hangers for Hot Pipe Sizes 6 Inches and Greater: Adjustable steel yoke, cast iron roll, double hanger.
5. Multiple or Trapeze Hangers: Steel channels with welded spacers and hanger rods.
6. Multiple or Trapeze Hangers for Hot Pipe Sizes 6 Inches and Greater: Steel channels with welded spacers and hanger rods, cast iron roll.
7. Wall Support for Pipe Sizes to 3 Inches: Cast iron hook.
8. Wall Support for Pipe Sizes 4 Inches and Greater: Welded steel bracket and wrought steel clamp.
9. Wall Support for Hot Pipe Sizes 6 Inches and Greater: Welded steel bracket and wrought steel clamp with adjustable steel yoke and cast iron roll.
10. Vertical Support: Steel riser clamp.
11. Floor Support for Cold Pipe: Cast iron adjustable pipe saddle, lock nut, nipple, floor flange, and concrete pier or steel support.
12. Floor Support for Hot Pipe Sizes to 4 Inches: Cast iron adjustable pipe saddle, lock nut, nipple, floor flange, and concrete pier or steel support.
13. Floor Support for Hot Pipe Sizes 6 Inches and Greater: Adjustable cast iron roll and stand, steel screws, and concrete pier or steel support.
14. Copper Pipe Support: Carbon steel ring, adjustable, copper plated.
15. Hanger Rods: Mild steel threaded both ends, threaded one end, or continuous threaded.

16. Inserts: Malleable iron case of galvanized steel shell and expander plug for threaded connection with lateral adjustment, top slot for reinforcing rods, lugs for attaching to forms; size inserts to suit threaded hanger rods.

B. In grooved installations, use rigid couplings with offsetting angle-pattern bolt pads or with wedge-shaped grooves in header piping to permit support and hanging in accordance with ASME B31.9.

C. Rooftop Supports for Low-Slope Roofs: Steel pedestals with bases that rest on top of roofing membrane, not requiring any attachment to the roof structure and not penetrating the roofing assembly, with support fixtures as specified; and as follows:
   1. Bases: High-density polypropylene.
   2. Base Sizes: As required to distribute load sufficiently to prevent indentation of roofing assembly.
   3. Steel Components: Stainless steel or carbon steel hot-dip galvanized after fabrication in accordance with ASTM A123/A123M.
   4. Attachment/Support Fixtures: As recommended by manufacturer, same type as indicated for equivalent indoor hangers and supports; corrosion-resistant material.
   5. Manufacturers:
      a. PHP Systems/Design: www.phpsd.com.
      b. Miro Industruies : http://www.miroind.com/.
      c. Substitutions: See Section 016000 - Product Requirements.

2.06 UNIONS, FLANGES, MECHANICAL COUPLINGS, AND DIELECTRIC CONNECTIONS

A. Unions for Pipe of 2 Inches and Less:
   1. Ferrous Piping: 150 psi brass or malleable iron, threaded.
   2. Copper Pipe: Bronze, soldered joints.

B. Flanges for Pipe 2 Inches and Greater:
   1. Ferrous Piping: 150 psig forged steel, slip-on.
   2. Copper Piping: Bronze.

C. Mechanical Couplings for Grooved and Shouldered Joints: Two or more curved housing segments with continuous key to engage pipe groove, offsetting angled bolt-pad requiring visual verification only for correct installation, circular C-profile gasket, and bolts to secure and compress gasket.
   1. Rigid Coupling description:
      a. Two curved housing segments with offsetting angled bolt-pad and continuous key to engage pipe groove.
         1) Designed for visual verification of correct installation only; minimum bolt torque setting will not be allowed.
         2) Couplings 14 inch and greater designed for an advance groove system for large diameter pipe based upon an extended "A" dimension (pipe end to groove) for wider gasket seat area and a wedge shaped groove for ease of coupling installation and alignment.
      b. Circular C-profile gasket shall be manufactured in-house by coupling manufacturer and shall be designed and tested for the entire life of the piping system.
         1) Gaskets 2 inch through 12 inch shall feature an integrated pipe-stop to insure coupling alignment over the pipe groove.
         2) Gaskets 14 inch and greater shall be designed specifically for large diameter pipe and feature an extended gasket seat area.
      c. Bolts to secure and compress gasket.
      d. Installation-ready with no loose parts or requirement to be disassembled for installation.
   2. Dimensions and Testing: In accordance with AWWA C606.
   3. Mechanical Couplings: Comply with ASME B31.9 and ASTM F1476.
   4. Housing Material: Ductile iron complying with ASTM A536.

5. Gasket Material: EPDM suitable for operating temperature range from -30 degrees F to 250 degrees F.
6. Bolts and Nuts: Hot dipped galvanized or zinc-electroplated steel.
7. When pipe is field grooved, provide coupling manufacturer's grooving tools.
8. Manufacturers:
   a. Victaulic Company: www.victaulic.com.
      1) Model Series 107N Rigid Coupling for sizes 2 inch through 12 inch.
   b. Substitutions: See Section 016000 - Product Requirements.

D. Dielectric Connections:
1. Waterways:
   a. Water impervious insulation barrier capable of limiting galvanic current to 1 percent of short circuit current in a corresponding bimetallic joint.
   b. Dry insulation barrier able to withstand 600-volt breakdown test.
   c. Construct of galvanized steel with threaded end connections to match connecting piping.
   d. Suitable for the required operating pressures and temperatures.
2. Flanges:
   a. Dielectric flanges with same pressure ratings as standard flanges.
   b. Water impervious insulation barrier capable of limiting galvanic current to 1 percent of short circuit current in a corresponding bimetallic joint.
   c. Dry insulation barrier able to withstand 600-volt breakdown test.
   d. Construct of galvanized steel with threaded end connections to match connecting piping.
   e. Suitable for the required operating pressures and temperatures.

2.07 GLOBE OR ANGLE VALVES

A. Manufacturers:
1. Conbraco Industries: www.apollovalves.com.
2. Milwaukee Valve Company: www.milwaukeevalve.com.
3. Nibco, Inc: www.nibco.com.
4. Tour Andersson, a Victaulic company: www.imi-hydronic.com.
5. Substitutions: See Section 016000 - Product Requirements.

B. Up To and Including 2 Inches:
1. Bronze body, bronze trim, screwed bonnet, rising stem and handwheel, inside screw with backseating stem, renewable composition disc and bronze seat, solder ends.

C. Over 2 Inches:
1. Iron body, bronze trim, bolted bonnet, rising stem, handwheel, outside screw and yoke, rotating plug-type disc with renewable seat ring and disc, flanged ends.

2.08 BALL VALVES

A. Manufacturers:
1. Conbraco Industries: www.apollovalves.com.
2. Grinnell Products, a Tyco Business: www.grinnell.com.
3. Milwaukee Valve Company: www.milwaukeevalve.com.
4. Nibco, Inc: www.nibco.com.
5. Victaulic Company; _____: www.victaulic.com/#sle.
6. Substitutions: See Section 016000 - Product Requirements.

B. Up To and Including 2 Inches:
1. Bronze one piece body, chrome plated brass ball, teflon seats and stuffing box ring, lever handle with balancing stops, solder ends with union.

C. Over 2 Inches:

1. Ductile iron body, chrome platedstainless steel ball, teflon or Virgin TFE seat and stuffing box seals, lever handle or gear operated, flanged ends, rated to 800 psi.

2.09 PLUG VALVES

A. Manufacturers:
   1. Conbraco Industries: www.apollovalves.com.
   2. Milwaukee Valve Company: www.milwaukeevalve.com.
   3. Nibco, Inc: www.nibco.com.
   4. Substitutions: See Section 016000 - Product Requirements.

B. Up To and Including 2 Inches:
   1. Bronze body, bronze tapered plug, 40 percent port opening, non-lubricated, teflon packing, threaded ends.
   2. Operator: One plug valve wrench for every ten plug valves minimum of one.

C. Over 2 Inches:
   1. Cast iron body and plug, 40 percent port opening, pressure lubricated, teflon packing, flanged ends.
   2. Operator: Each plug valve with a wrench with set screw.

2.10 BUTTERFLY VALVES

A. Manufacturers:
   1. Crane Co.: www.craneco.com.
   2. Grinnell Products, a Tyco Business: www.grinnell.com.
   3. Shurjoint Piping Products, Inc., a Tyco Business: www.shurjoint.com.
   4. Hammond Valve: www.hammondvalve.com.
   5. Milwaukee Valve Company: www.milwaukeevalve.com.
   6. Victaulic Company: www.victaulic.com.
   7. Substitutions: See Section 016000 - Product Requirements.

B. Body: Cast or ductile iron with resilient replaceable EPDM seat, wafer, lug, or grooved ends, extended neck.

C. Disc: Construct of aluminum bronze, chrome plated ductile iron, stainless steel, ductile iron with EPDM enscapsulation, or Buna-N enscapsulation.

D. Operator: 10 position lever handle.

2.11 SWING CHECK VALVES

A. Manufacturers:
   1. Grinnell Products, a Tyco Business: www.grinnell.com.
   2. Hammond Valve: www.hammondvalve.com.
   3. Milwaukee Valve Company: www.milwaukeevalve.com.
   4. Nibco, Inc: www.nibco.com.
   5. Victaulic Company: www.victaulic.com.
   6. Substitutions: See Section 016000 - Product Requirements.

B. Up To and Including 2 Inches:
   1. Bronze body, bronze trim, bronze rotating swing disc, with composition disc, solder ends.

C. Over 2 Inches:
   1. Iron body, bronze trim, stainless steel, bronze, or bronze faced rotating swing disc, renewable disc and seat, flanged or grooved ends.

2.12 SPRING LOADED CHECK VALVES

A. Manufacturers:
   1. Crane Co.: www.craneco.com.
   2. Hammond Valve: www.hammondvalve.com.
   3. Milwaukee Valve Company: www.milwaukeevalve.com.

4. Victaulic Company; _____: www.victaulic.com/#sle.
5. Substitutions: See Section 016000 - Product Requirements.

B. Iron body, bronze trim, split plate, hinged with stainless steel spring, resilient seal bonded to body, wafer, or threaded lug ends.

2.13 FLOW CONTROLS

A. Manufacturers:
1. Griswold Controls: www.griswoldcontrols.com.
2. ITT Bell & Gossett: www.bellgossett.com.
3. Taco, Inc: www.taco-hvac.com.
4. Tour Andersson, a Victaulic company: www.imi-hyronic.com.
5. Substitutions: See Section 016000 - Product Requirements.

B. Construction: Class 125, Brass or bronze body with union on inlet and outlet, temperature and pressure test plug on inlet and outlet, blowdown/backflush drain.

C. Calibration: Control flow within 10 percent of selected rating, over operating pressure range of 10 times minimum pressure required for control, minimum pressure 2 psi.

PART 3 EXECUTION

A. Ream pipe and tube ends. Remove burrs. Bevel plain end ferrous pipe.

B. Prepare pipe for grooved mechanical joints as required by coupling manufacturer.

C. Remove scale and dirt on inside and outside before assembly.

D. Keep open ends of pipe free from scale and dirt. Protect open ends with temporary plugs or caps.

E. After completion, fill, clean, and treat systems. See Section 232500 for additional requirements.

3.02 INSTALLATION

A. Install in accordance with manufacturer's instructions.

B. Install heating water, glycol piping to ASME B31.9 requirements.

C. Install condenser water piping to ASME B31.9 requirements.

D. Install engine exhaust piping to ASME B31.9 requirements.

E. Install chilled water piping to ASME B31.5 requirements

F. PVC Pipe: Make solvent-welded joints in accordance with ASTM D2855.

G. Route piping in orderly manner, parallel to building structure, and maintain gradient.

H. Install piping to conserve building space and to avoid interference with use of space.

I. Group piping whenever practical at common elevations.

J. Install firestopping to preserve fire resistance rating of partitions and other elements, using materials and methods specified _____.

K. Slope piping and arrange to drain at low points.

L. Install piping to allow for expansion and contraction without stressing pipe, joints, or connected equipment. See Section 230516.

M. Grooved Joints:
1. Install in accordance with the manufacturer's latest published installation instructions.
2. Gaskets to be suitable for the intended service, molded, and produced by the coupling manufacturer.

N. Inserts:
1. Provide inserts for placement in concrete formwork.

2. Provide inserts for suspending hangers from reinforced concrete slabs and sides of reinforced concrete beams.
3. Provide hooked rod to concrete reinforcement section for inserts carrying pipe over 4 inches.
4. Where concrete slabs form finished ceiling, locate inserts flush with slab surface.
5. Where inserts are omitted, drill through concrete slab from below and provide through-bolt with recessed square steel plate and nut above slab.

O. Pipe Hangers and Supports:
1. Install in accordance with ASME B31.9, ASTM F708, or MSS SP-58.
2. Support horizontal piping as scheduled.
3. Install hangers to provide minimum 1/2-inch space between finished covering and adjacent work.
4. Place hangers within 12 inches of each horizontal elbow.
5. Use hangers with 1-1/2 inches minimum vertical adjustment. Design hangers for pipe movement without disengagement of supported pipe.
6. Support vertical piping at every other floor. Support riser piping independently of connected horizontal piping.
7. Where several pipes can be installed in parallel and at same elevation, provide multiple or trapeze hangers.
8. Provide copper plated hangers and supports for copper piping.
9. Prime coat exposed steel hangers and supports. See Section 09 9123. Hangers and supports located in crawl spaces, pipe shafts, and suspended ceiling spaces are not considered exposed.

P. Provide clearance in hangers and from structure and other equipment for installation of insulation and access to valves and fittings. See Section 230719.

Q. Provide access where valves and fittings are not exposed. Coordinate size and location of access doors with Section 083100 .

R. Use eccentric reducers to maintain top of pipe level.

S. Prepare unfinished pipe, fittings, supports, and accessories, ready for finish painting. See Section 099123.

T. Install valves with stems upright or horizontal, not inverted.

3.03 SCHEDULES

A. Hanger Spacing for Copper Tubing.

B. Hanger Spacing for Steel Piping.

C. Hanger Spacing for Plastic Piping.

END OF SECTION 232113

SECTION 232114
HYDRONIC SPECIALTIES

PART 1 GENERAL

1.01 SECTION INCLUDES

A. Air vents.

B. Strainers.

C. Suction diffusers.

D. Pressure-temperature test plugs.

E. Balancing valves.

F. Automatic flow control valves.

G. Relief valves.

H. Pressure reducing valves.

1.02 RELATED REQUIREMENTS

A. Section 232113 - Hydronic Piping.

1.03 REFERENCE STANDARDS

A. ASME BPVC-VIII-1 - Boiler and Pressure Vessel Code, Section VIII, Division 1: Rules for Construction of Pressure Vessels.

1.04 SUBMITTALS

A. See Section 013000 - Administrative Requirements for submittal procedures.

B. Product Data: Provide product data for manufactured products and assemblies required for this project. Include component sizes, rough-in requirements, service sizes, and finishes. Include product description and model.

C. Manufacturer's Installation Instructions: Indicate hanging and support methods, joining procedures.

1.05 DELIVERY, STORAGE, AND HANDLING

A. Accept valves on site in shipping containers with labeling in place. Inspect for damage.

B. Provide temporary protective coating on cast iron and steel valves.

C. Provide temporary end caps and closures on piping and fittings. Maintain in place until installation.

D. Protect piping systems from entry of foreign materials by temporary covers, completing sections of the work, and isolating parts of completed system.

PART 2 PRODUCTS

2.01 AIR VENTS

A. Manufacturers:
   1. Armstrong International, Inc: www.armstronginternational.com.
   2. ITT Bell & Gossett: www.bellgossett.com.
   3. Taco, Inc: www.taco-hvac.com.
   4. Substitutions: See Section 016000 - Product Requirements.

B. Manual Air Vent: Short vertical sections of 2-inch diameter pipe to form air chamber, with 1/8 inch brass needle valve at top of chamber.

C. Float Air Vent:

D. Maximum Fluid Pressure: 150 psi.

E. Maximum Fluid Temperature: 250 degrees F.

2.02 AIR SEPARATORS

A. Coalescing Air/Dirt Separators:
   1. Manufacturers:
      a. Armstrong International, Inc: www.armstronginternational.com.
      b. ITT Bell & Gossett: www.bellgossett.com.
      c. Spirotherm, Inc: www.spirotherm.com.
      d. Substitutions: See Section 016000 - Product Requirements.
   2. Tank: Fabricated steel tank; tested and stamped in accordance with ASME BPVC-VIII-1 for maximum fluid service subject to application requirements and manufacturer's standard maximum operating conditions.
   3. Air Vent: Integral float actuated air vent at top fitting of tank rated at 150 psi, threaded to top of separator.
   4. End Connections: Class 150 flanged for 2-1/2 inch and larger otherwise threaded.
   5. Blowdown Connection: Threaded.
   6. Size: Match system flow capacity.
   7. Maximum Fluid Service Pressure: 150 psi.
   8. Maximum Fluid Service Temperature: 250 degrees F.

2.03 STRAINERS

A. Manufacturers:
   1. Armstrong International, Inc: www.armstronginternational.com.
   2. Flexicraft Industries: www.flexicraft.com.
   3. Grinnell Products, a Tyco Business: www.grinnell.com.
   4. Shurjoint Piping Products, Inc., a Tyco Business: www.shurjoint.com.
   5. The Metraflex Company: www.metraflex.com.
   6. Substitutions: See Section 016000 - Product Requirements.

B. Size 2 inch and Under:
   1. Provide threaded, grooved, or sweat brass or iron body for up to 175 psi working pressure, Y-pattern strainer with 1/32 inch stainless steel perforated screen.
   2. Screwed brass or iron body for 175 psi working pressure, Y pattern with stainless steel perforated screen.

C. Size 2-1/2 inch to 4 inch:
   1. Body Material by Fluid Service:
   2. Provide flanged or grooved iron body for 175 psi working pressure, Y pattern with stainless steel perforated screen.

D. Size 5 inch and Larger:
   1. Provide flanged or grooved iron body for up to 175 psi working pressure, basket pattern with 1/8 inch stainless steel perforated screen.
   2. Liquid Fluid Service: Up to 285 psi at 100 degrees F.
   3. Provide flanged or grooved iron body for 175 psi working pressure, basket pattern with stainless steel perforated screen.

E. Perforated Mesh Size (verify with applicable equipment manufactuer):
   1. Chilled Water Evaporator inlet: Minimum Mesh number 40 (0.0165")
   2. Water cooled Condenser Inlet; Minimum Mesh number 30 (0.0232")
   3. Condensing Boiler Inlet: Minimum Mesh number 30 (0.0232")
   4. Pump Sunction: Minimum Mesh number 30 (0.0232")

2.04 SUCTION DIFFUSERS

A. Manufacturers:
   1. Anvil International, Inc: www.anvilintl.com.
   2. Grinnell Products, a Tyco Business: www.grinnell.com.
   3. Victaulic Company of America: www.victaulic.com.

4. Substitutions: See Section 016000 - Product Requirements.

B. Accessories: Adjustable foot support, blowdown tapping in bottom, gauge tapping in side.

2.05 COMBINATION PUMP DISCHARGE VALVES

A. Manufacturers:
1. Crane Co.: www.craneco.com.
2. Taco, Inc: www.taco-hvac.com.
3. Victaulic Company of America: www.victaulic.com.
4. Substitutions: See Section 016000 - Product Requirements.

B. Quarter-Turn Plug Type: Flanged cast-iron body with bolt-on bonnet, position indicator, stainless steel stem, backflow preventer, memory stop, metering connectors, bubble-tight shutoff, and wrench-adjustable plug flow regulator.

2.06 PRESSURE-TEMPERATURE TEST PLUGS

A. Manufacturers:
1. Ferguson Enterprises Inc: www.fnw.com.
2. Peterson Equipment Company Inc: www.petesplug.com.
3. Sisco Manufacturing Company Inc: www.siscomfg.com.
4. Substitutions: See Section 016000 - Product Requirements.

B. Construction: Brass body designed to receive temperature or pressure probe with removable protective cap, and Neoprene rated for minimum 200 degrees F.

C. Application: Use extended length plugs to clear insulated piping.

2.07 BALANCING VALVES

A. Manufacturers:
1. Armstrong International, Inc: www.armstronginternational.com.
2. Taco, Inc: www.taco-hvac.com.
3. Substitutions: See Section 016000 - Product Requirements.

B. Size 2 inch and Smaller:
1. Provide ball or globe style with flow balancing, shut-off capabilities, memory stops, and minimum of two metering ports and female sweat, NPT threaded, press, or soldered connections.
2. Metal construction materials consist of bronze or brass.
3. Non-metal construction materials consist of Teflon, EPDM, or engineered resin.

C. Size 2-1/2 inch and Larger:
1. Provide ball, globe, or butterfly style with flow balancing, shut-off capabilities, memory stops, and minimum of two metering ports and flanged, grooved, or weld-end connections.
2. Valve body construction materials consist of cast iron, carbon steel, or ductile iron.
3. Internal components construction materials consist of brass, aluminum bronze, bronze, Teflon, EPDM, NORYL, or engineered resin.

2.08 AUTOMATIC FLOW CONTROL VALVES

A. Manufacturers:
1. Armstrong International: www.armstronginternational.com
2. Taco Inc: www.taco-hvac.com.
3. Substitutions: See Section 016000 - Product Requirements.

B. Construction:
1. Brass, bronze, or iron body with union on inlet and outlet, temperature and pressure test plug on inlet and outlet with blowdown/backflush drain.
2. Built-in lug-type outlet butterfly valve with 2-position handle.

C. Calibration: Control flow within 10 percent of selected rating, over operating pressure range of 10 times minimum pressure required for control, minimum pressure 2 psi.

D. Control Mechanism: Provide stainless steel or nickel-plated, brass piston or regulator cup, operating against stainless steel helical or wave formed spring or elastomeric diaphragm and polyphenylsulfone orifice plate.

2.09 FLOW METERS

A. Manufacturers:
   1. Dwyer Instruments, Inc: www.dwyer-inst.com.
   2. EMCO Flow Systems: www.emcoflow.com.
   3. Substitutions: See Section 016000 - Product Requirements.

B. Orifice principle by-pass circuit with direct reading gauge, soldered or flanged piping connections for 125 psi working pressure, with shut off valves, and drain and vent connections.

C. Direct reading with insert pitot tube, threaded coupling, for 150 psi working pressure, maximum 240 degrees F, 5 percent accuracy.

D. Cast iron, wafer type, orifice insert flow meter for 250 psi working pressure, with read-out valves equipped with integral check valves with gasketed caps.

2.10 RADIATOR VALVES

A. Manufacturers:
   1. Armstrong International, Inc: www.armstronginternational.com.
   2. ITT Bell & Gossett: www.bellgossett.com.
   3. Myson, Inc: www.mysoninc.com.
   4. Substitutions: See Section 016000 - Product Requirements.

B. Angle or straight pattern, rising stem, inside screw globe valve for 125 psi working pressure, with bronze body and integral union for screwed connections, renewable composition disc, plastic wheel handle for shut-off service, and lockshield key cap and set screw memory bonnet for balancing service.

2.11 RELIEF VALVES

A. Manufacturers:
   1. Armstrong International, Inc: www.armstronginternational.com.
   2. ITT Bell & Gossett: www.bellgossett.com.
   3. Substitutions: See Section 016000 - Product Requirements.

B. Bronze body, teflon seat, stainless steel stem and springs, automatic, direct pressure actuated, capacities ASME certified and labelled.

2.12 PRESSURE REDUCING VALVES

A. Manufacturers:
   1. Armstrong International, Inc: www.armstronginternational.com.
   2. ITT Bell & Gossett: www.bellgossett.com.
   3. Taco, Inc: www.taco-hvac.com.
   4. Substitutions: See Section 016000 - Product Requirements.

B. Operation: Automatically feeds make-up water to the hydronic system whenever pressure in the system drops below the pressure setting of the valve. Refer to Section 232113.

C. Materials of Construction:
   1. Valve Body: Constructed of bronze, cast iron, brass, iron, or _____.
   2. Internal Components: Construct of stainless steel or brass and engineered plastics or composition material.

D. Connections:

E. Provide integral check valve and strainer.

F. Maximum Inlet Pressure: 400 psi.

G. Maximum Fluid Temperature: 180 degrees F.

H. Adjustable Pressure Range: From 10 to 45 psi, set to 25 psi.

PART 3 EXECUTION

3.01 INSTALLATION

A. Install specialties in accordance with manufacturer's instructions.

B. Provide strainer at inlet of chiller evaporator, water cooled chiller condenser, boiler, pump, etc. HVAC equipment as applicable.

END OF SECTION 232114

SECTION 232300
REFRIGERANT PIPING

PART 1 GENERAL

1.01 SECTION INCLUDES

A. Piping.

B. Preinsulated Line Set (for VRF system or split system under 5 tons of cooling).

C. Refrigerant.

D. Moisture and liquid indicators.

E. Valves.

F. Strainers.

G. Filter-driers.

1.02 RELATED REQUIREMENTS

A. Section 083100 - Access Doors and Panels.

B. Section 260583 - Wiring Connections: Electrical characteristics and wiring connections.

1.03 REFERENCE STANDARDS

A. ASHRAE Std 15 - Safety Standard for Refrigeration Systems.

B. ASME B31.5 - Refrigeration Piping and Heat Transfer Components.

1.04 SUBMITTALS

A. See Section 013000 - Administrative Requirements for submittal procedures.

B. Product Data: Provide general assembly of specialties, including manufacturer's catalogue information. Provide manufacturer's catalog data including load capacity.

C. Shop Drawings: Indicate schematic layout of system, including equipment, critical dimensions, and sizes.

D. Design Data: Submit design data indicating pipe sizing. Indicate load-carrying capacity of trapeze, multiple pipe, and riser support hangers.

E. Test Reports: Indicate results of leak test, acid test.

F. Manufacturer's Installation Instructions: Indicate support, connection requirements, and isolation for servicing.

G. Project Record Documents: Record exact locations of equipment and refrigeration accessories on record drawings.

H. Maintenance Data: Include instructions for changing cartridges, assembly views, spare parts lists.

1.05 DELIVERY, STORAGE, AND HANDLING

A. Deliver and store piping and specialties in shipping containers with labeling in place.

B. Protect piping and specialties from entry of contaminating material by leaving end caps and plugs in place until installation.

C. Dehydrate and charge components such as piping and receivers, seal prior to shipment, until connected into system.

PART 3 EXECUTION

2.01 PREPARATION

A. Ream pipe and tube ends. Remove burrs. Bevel plain-end ferrous pipe.

B. Remove scale and dirt on inside and outside before assembly.

C. Prepare piping connections to equipment with flanges or unions.

2.02 INSTALLATION

A. Install refrigeration specialties in accordance with manufacturer's instructions.

B. Route piping in orderly manner, with plumbing parallel to building structure, and maintain gradient.

C. Install piping to conserve building space and avoid interference with use of space.

D. Group piping whenever practical at common elevations and locations. Slope piping one percent in direction of oil return.

E. Install piping to allow for expansion and contraction without stressing pipe, joints, or connected equipment.

F. Inserts:
   1. Provide inserts for placement in concrete formwork.
   2. Provide inserts for suspending hangers from reinforced concrete slabs and sides of reinforced concrete beams.
   3. Provide hooked rod to concrete reinforcement section for inserts carrying pipe over 4 inches.
   4. Where concrete slabs form finished ceiling, locate inserts flush with slab surface.
   5. Where inserts are omitted, drill through concrete slab from below and provide through-bolt with recessed square steel plate and nut above slab.

G. Pipe Hangers and Supports:
   1. Install in accordance with ASME B31.5.
   2. Support horizontal piping as indicated.
   3. Install hangers to provide minimum 1/2 inch space between finished covering and adjacent work.
   4. Place hangers within 12 inches of each horizontal elbow.
   5. Support vertical piping at every other floor. Support riser piping independently of connected horizontal piping.
   6. Where several pipes can be installed in parallel and at same elevation, provide multiple or trapeze hangers.
   7. Provide copper plated hangers and supports for copper piping.

H. Arrange piping to return oil to compressor. Provide traps and loops in piping, and provide double risers as required. Slope horizontal piping 0.40 percent in direction of flow.

I. Provide clearance for installation of insulation and access to valves and fittings.

J. Provide access to concealed valves and fittings. Coordinate size and location of access doors with Section 083100.

K. Flood piping system with nitrogen when brazing.

L. Where pipe support members are welded to structural building frame, brush clean, and apply one coat of zinc rich primer to welding.

M. Insulate piping and equipment.

N. Follow ASHRAE Std 15 procedures for charging and purging of systems and for disposal of refrigerant.

O. Provide replaceable cartridge filter-driers, with isolation valves and valved bypass.

P. Locate expansion valve sensing bulb immediately downstream of evaporator on suction line.

Q. Provide external equalizer piping on expansion valves with refrigerant distributor connected to evaporator.

R. Install flexible connectors at right angles to axial movement of compressor, parallel to crankshaft.

S. Line Set Cover Systems:
   1. Provide cover for all exposed piping in finish area and as indicated on drawing.

T. Fully charge completed system with refrigerant after testing.

U. Provide electrical connection to solenoid valves. See Section 260583.

2.03 FIELD QUALITY CONTROL

A. See Section 014000 - Quality Requirements, for additional requirements.

B. Test refrigeration system in accordance with ASME B31.5.

C. Pressure test system with dry nitrogen to 200 psi. Perform final tests at 27 inches vacuum and 200 psi using halide torch. Test and repair piping until no leakage.

2.04 SCHEDULES

A. Hanger Spacing for Copper Tubing.

1. 1/2 inch, 5/8 inch, and 7/8 inch OD: Maximum span, 5 feet; minimum rod size, 1/4 inch.
2. 1-1/8 inch OD: Maximum span, 6 feet; minimum rod size, 1/4 inch.
3. 1-3/8 inch OD: Maximum span, 7 feet; minimum rod size, 3/8 inch.
4. 1-5/8 inch OD: Maximum span, 8 feet; minimum rod size, 3/8 inch.
5. 2-1/8 inch OD: Maximum span, 8 feet; minimum rod size, 3/8 inch.
6. 2-5/8 inch OD: Maximum span, 9 feet; minimum rod size, 3/8 inch.
7. 3-1/8 inch OD: Maximum span, 10 feet; minimum rod size, 3/8 inch.
8. 3-5/8 inch OD: Maximum span, 11 feet; minimum rod size, 1/2 inch.
9. 4-1/8 inch OD: Maximum span, 12 feet; minimum rod size, 1/2 inch.

END OF SECTION 232300

SECTION 232500
HVAC WATER TREATMENT

PART 1 GENERAL

1.01 SECTION INCLUDES

A. Materials.
   1. System cleaner.
   2. Closed system treatment (water).

1.02 RELATED REQUIREMENTS

A. Section 232113 - Hydronic Piping.

B. Section 232114 - Hydronic Specialties.

1.03 SUBMITTALS

A. See Section 013000 - Administrative Requirements, for submittal procedures.

B. Product Data: Provide chemical treatment materials, chemicals, and equipment including electrical characteristics and connection requirements.

C. Shop Drawings: Indicate system schematic, equipment locations, and controls schematics, electrical characteristics and connection requirements.

D. Manufacturer's Installation Instructions: Indicate placement of equipment in systems, piping configuration, and connection requirements.

E. Manufacturer's Field Reports: Indicate start-up of treatment systems when completed and operating properly. Indicate analysis of system water after cleaning and after treatment.

F. Operation and Maintenance Data: Include data on chemical feed pumps, agitators, and other equipment including spare parts lists, procedures, and treatment programs. Include step by step instructions on test procedures including target concentrations.

1.04 REGULATORY REQUIREMENTS

A. Conform to applicable code for addition of non-potable chemicals to building mechanical systems and to public sewage systems.

B. Products Requiring Electrical Connection: Listed and classified by UL as suitable for the purpose specified and indicated.

PART 2 PRODUCTS

2.01 TEST EQUIPMENT

A. Provide white enamel test cabinet with local and fluorescent light, capable of accommodating 4 - 10 ml zeroing titrating burettes and associated reagents.

B. Provide the following test kits:
   1. Alkalinity titration test kit.
   2. Chloride titration test kit.
   3. Sulphite titration test kit.
   4. Total hardness titration test kit.
   5. Low phosphate test kit.
   6. Conductivity bridge, range 0 - 10,000 micro-ohms.
   7. Creosol red pH slide complete with reagent.
   8. Portable electronic conductivity meter.
   9. High nitrite test kit.

2.02 SIDE-STREAM FILTRATION SYSTEM

A. Manufacturers:

B. System: Flow indicator, filter housing with cartridge filter, shut-off valves, and flow control valve.

C. Hot Water and Glycol Filter Housing: Glass reinforced nylon plastic suitable for 220 degrees F and 200 psi operating conditions.

D. Chilled Water Filter Housing: Reinforced polypropylene plastic housing suitable for 125 degrees F and 125 psi operating conditions.

E. Cartridges: 30 micron for start-up and 5 micron for system operation.

PART 3 EXECUTION

3.01 PREPARATION

A. Systems shall be operational, filled, started, and vented prior to cleaning. Use water meter to record capacity in each system.

B. Place terminal control valves in open position during cleaning.

C. Verify that electric power is available and of the correct characteristics.

3.02 CLEANING SEQUENCE

A. Concentration:
   1. As recommended by manufacturer.
   2. Fill steam boilers only with cleaner and water.

B. Hot Water Heating Systems:
   1. Apply heat while circulating, slowly raising temperature to 160 degrees F and maintain for 12 hours minimum.
   2. Remove heat and circulate to 100 degrees F or less; drain systems as quickly as possible and refill with clean water.
   3. Circulate for 6 hours at design temperatures, then drain.
   4. Refill with clean water and repeat until system cleaner is removed.

C. Chilled Water Systems:
   1. Circulate for 48 hours, then drain systems as quickly as possible.
   2. Refill with clean water, circulate for 24 hours, then drain.
   3. Refill with clean water and repeat until system cleaner is removed.

3.03 INSTALLATION

A. Install in accordance with manufacturer's instructions.

3.04 CLOSED SYSTEM TREATMENT

A. Provide one bypass feeder on each system. Install isolating and drain valves and necessary piping. Install around balancing valve downstream of circulating pumps unless indicated otherwise.

B. Introduce closed system treatment through bypass feeder when required or indicated by test.

C. Provide 3/4 inch water coupon rack around circulating pumps with space for 4 test specimens.

3.05 CONDENSER WATER SYSTEMS (COOLING TOWERS)

A. Provide solution pumps to feed sequestering agent and corrosion inhibitor from solution tank into condenser water supply to tower. Provide agitator as required.

B. Provide conductivity controller to sample condenser water and operate 1 inch solenoid bleed valve and solution pumps. Provide 1/4 inch solenoid valve and piping to blowdown controller sampler wired to open when condensing water pump is operating.

C. Provide solution pump to feed diluted acid from solution tank into condenser water supply to tower.

D. Introduce algicide to tower by intermittent slug feed.

E. Provide water meter in make-up water line to tower, to activate solution pumps for preset time when condenser water pumps are running.

F. Provide liquid level switch in each solution tank to deactivate solution pump and agitator and sound local alarm bell.

G. Provide 3/4 inch water coupon rack around circulating pumps with space for 4 test specimens.

3.06 CLOSEOUT ACTIVITIES

A. Training: Train Owner's personnel on operation and maintenance of chemical treatment system.
   1. Provide minimum of two hours of instruction for two people.
   2. Have operation and maintenance data prepared and available for review during training.
   3. Conduct training using actual equipment after treated system has been put into full operation.

3.07 MAINTENANCE

A. Perform maintenance work using competent and qualified personnel under the supervision and in the direct employ of the equipment manufacturer or original installer.

B. Provide service and maintenance of treatment systems for one year from Date of Substantial Completion.

C. Provide monthly technical service visits to perform field inspections and make water analysis on-site. Detail findings in writing on proper practices, chemical treating requirements, and corrective actions needed. Submit two copies of field service report after each visit.

D. Provide laboratory and technical assistance services during this maintenance period.

E. Provide on-site inspections of equipment during scheduled or emergency shutdown to properly evaluate success of water treatment program, and make recommendations in writing based upon these inspections.

END OF SECTION 232500

SECTION 233100
HVAC DUCTS AND CASINGS

PART 1 GENERAL

A. Metal ducts.

B. Air plenums and casings.

1.02 SECTION INCLUDES

A. Flexible ducts.

1.03 RELATED REQUIREMENTS

A. Section 233319 - Duct Silencers.

1.04 REFERENCE STANDARDS

A. ASHRAE (FUND) - ASHRAE Handbook - Fundamentals.

B. ASTM A36/A36M - Standard Specification for Carbon Structural Steel.

C. ASTM A653/A653M - Standard Specification for Steel Sheet, Zinc-Coated (Galvanized) or Zinc-Iron Alloy-Coated (Galvannealed) by the Hot-Dip Process.

D. ASTM E84 - Standard Test Method for Surface Burning Characteristics of Building Materials.

E. ICC-ES AC01 - Acceptance Criteria for Expansion Anchors in Masonry Elements.

F. ICC-ES AC106 - Acceptance Criteria for Predrilled Fasteners (Screw Anchors) in Masonry.

G. ICC-ES AC193 - Acceptance Criteria for Mechanical Anchors in Concrete Elements.

H. ICC-ES AC308 - Acceptance Criteria for Post-Installed Adhesive Anchors in Concrete Elements.

I. NFPA 90A - Standard for the Installation of Air-Conditioning and Ventilating Systems.

J. SMACNA (DCS) - HVAC Duct Construction Standards Metal and Flexible.

K. UL 181 - Standard for Factory-Made Air Ducts and Air Connectors.

1.05 SUBMITTALS

A. See Section 013000 - Administrative Requirements for submittal procedures.

B. Product Data: Provide data for duct materials.

C. Shop Drawings: Indicate duct fitting types, gauges, sizes, welds, and configuration.

1.06 REGULATORY REQUIREMENTS

A. Construct ductwork to NFPA 90A standards.

1.07 FIELD CONDITIONS

A. Do not install duct sealants when temperatures are less than those recommended by sealant manufacturers.

B. See Section 017800 - Closeout Submittals for additional warranty requirements.

C. Maintain temperatures within acceptable range during and after installation of duct sealants.

1.08 WARRANTY

PART 2 PRODUCTS

2.01 REQUIREMENTS FOR ALL PRODUCTS OF THIS SECTION

A. Surface Burning Characteristics: Flame spread/Smoke developed index of 25/50, maximum, when tested in accordance with ASTM E84, NFPA 255, or UL 723.

2.02 GENERAL REQUIREMENTS

A. Provide metal duct unless otherwise indicated. Fibrous glass duct can be substituted at the Contractor's option.

a. Seal: Class C, apply to seal off transverse joints.
b. Leakage:

2. Construct tees, bends, and elbows with radius of not less than 1-1/2 times width of duct on centerline. Where not possible and where rectangular elbows must be used, provide airfoil turning vanes of perforated metal with glass fiber insulation.
3. Increase duct sizes gradually, not exceeding 15 degrees divergence wherever possible; maximum 30 degrees divergence upstream of equipment and 45 degrees convergence downstream.
4. Where ducts are connected to exterior wall louvers and duct outlet is smaller than louver frame, provide blank-out panels sealing louver area around duct. Use same material as duct, painted black on exterior side; seal to louver frame and duct.
   a. Seal: Class A, apply sealing of transverse joints, longitudinal seams, and duct wall penetrations.

B. Duct Fabrication Requirements:

C. Provide UL Class 1 ductwork, fittings, hangers, supports, and appurtenances in accordance with NFPA 90A and SMACNA (DCS) guidelines unless stated otherwise.

D. Acoustical Treatment: Provide sound-absorbing liners and sectional silencers for metal-based ducts in compliance with Section 233319.

E. Duct Shape and Material in accordance with Allowed Static Pressure Range:

F. Duct Sealing and Leakage in accordance with Static Pressure Class:
   a. Leakage:
   b. Seal: Class B, apply sealing of transverse joints and longitudinal seams.

2. Duct and Fitting Fabrication and Support: SMACNA (DCS) including specifics for continuously welded round and oval duct fittings.
3. Use reinforced and sealed sheet-metal materials at recommended gauges for indicated operating pressures or pressure class.
4. Provide turning vanes of perforated metal with glass fiber insulation when acoustical lining is indicated.
5. Provide turning vanes of perforated metal with glass fiber insulation when an acoustical lining is required.
   a. Leakage:
      1) Round: Class 6 or 6 cfm/100 sq ft.
      2) Rectangular: Class 24 or 24 cfm/100 sq ft.
6. Low Pressure Service: From 2 in-wc to 3 in-wc:
      1) Round: Class 3 or 3 cfm/100 sq ft.
7. Medium and High Pressure Service: Above 3 in-wc:
      1) Rectangular: Class 12 or 12 cfm/100 sq ft.
      2) Round: Class 12 or 12 cfm/100 sq ft.
8. Low Pressure Service: Up to 2 in-wc:
9. Round: Plus or minus 2 in-wc of galvanized steel.
10. Rectangular: Plus or minus 1/2 in-wc of galvanized steel.

2.03 METAL DUCTS

1. Galvanized Steel: Hot-dipped galvanized steel sheet, ASTM A653/A653M FS Type B, with G60/Z180 coating.
   a. Inner Wall: Perforated galvanized steel.
      1) Thickness: 1 inch fiberglass.
      2) Thickness: 1 inch.
      3) Carlisle HVAC Products; Nexus Flange Connectors with Sealant Pocket: www.carlislehvac.com/#sle.
      4) Elgen Manufacturing Company, Inc: www.elgenmfg.com/#sle.
      5) L&L Fabrication; www.landlfab.com/duct-fabrication/.

2. Pressure Rating: 10 in-wc positive and 1 in-wc negative.
3. Temperature Range: Minus 20 degrees F to 250 degrees F.
    a. Thermaflex; www.thermaflex.com.

B. Material Requirements:
    a. Fittings: Manufacture with solid inner wall.
    b. Insulation:
    c. Insulation:
        1) Material: Air.
2. Round Connection System: Interlocking duct connection system per SMACNA (DCS).
3. Round spiral lock seam duct with galvanized steel outer wall.
4. Fittings: Manufacture with solid inner wall of perforated galvanized steel.
5. Maximum Velocity: 5500 fpm.
    a. Hart & Cooley, Inc; www.hartandcooley.com/#sle.
6. Insulation: R6 insulation with polyethylene vapor barrier film.

C. Connectors, Fittings, Sealants, and Miscellaneous:
1. Transverse Duct Connection System: SMACNA "E" rated rigid class connection, interlocking angle and duct edge connection system with sealant, gasket, cleats, and corner clips in accordance with SMACNA (DCS).

D. Round Spiral Duct:

E. Round Metal Ducts:
1. Flat-Oval Double Wall Insulated Duct: Machine made from round spiral lock seam duct.
2. Round Double Wall Insulated Duct: Round spiral lock seam duct with galvanized steel outer wall, perforated galvanized steel inner wall; fitting with the solid inner wall.
    a. Manufacturers:
        1) Substitutions: See Section 016000 - Product Requirements.

F. Flat-Oval Metal Ducts:
    a. Substitutions: See Section 016000 - Product Requirements.
2. Manufacturers:

G. Flexible Ducts: UL 181, Class 1, polyethylene film, mechanically fastened and rolled using galvanized steel to form a spiral helix.

2.04 AIR PLENUMS AND CASINGS

A. Fabricate in accordance with SMACNA (DCS) for indicated operating pressures indicated.

B. Minimum Fabrication Requirements:
1. Provide 16-gauge, 0.059-inch sheet steel back facing and 22-gauge, 0.029-inch perforated sheet steel front facing with 3/32 inch diameter holes on 5/32 inch centers.
2. Mount floor-mounted plenum or casings on 4-inch high concrete curbs. At floor, rivet panels on 8-inch centers to angles. Where floors are acoustically insulated, provide liner of galvanized 18-gauge, 0.052-inch expanded metal mesh supported at 12-inch centers, turned up 12 inches at sides with sheet metal shields.
3. Install hinged access doors where indicated or required for access to equipment for cleaning and inspection.
4. Provide clear wire glass observation ports, minimum 6 by 6 inch size.
5. Fabricate acoustic plenum or casing with reinforcing turned inward.
6. Construct panels 3 inches thick, packed with 4.5 pcf minimum glass fiber insulation media, on inverted channel of 16-gauge, 0.059-inch sheet steel.

C. Access Doors:
1. Reinforce door frames with steel angles tied to horizontal and vertical plenum supporting angles.

PART 3 EXECUTION

3.01 INSTALLATION

A. Install, support, and seal ducts in accordance with SMACNA (DCS).

B. Install products following the manufacturer's instructions.

C. During construction, provide temporary closures of metal or taped polyethylene on open ductwork to prevent construction dust from entering the ductwork system.

D. Flexible Ducts: Connect to metal ducts with adhesive.

E. Duct sizes indicated are precise inside dimensions. For lined ducts, maintain sizes inside lining.

F. Provide openings in ductwork as indicated to accommodate thermometers and controllers. Provide pilot tube openings as indicated for testing of systems, complete with metal can with spring device or screw to insure against air leakage. For openings, insulate ductwork and install insulation material inside a metal ring.

G. Locate ducts with sufficient space around equipment to allow normal operating and maintenance activities.

H. Use crimp joints with or without bead for joining round duct sizes 8 inch and smaller with a crimp in the direction of airflow.

I. Use double nuts and lock washers on threaded rod supports.

J. Connect terminal units to supply ducts directly or with one foot maximum length of flexible duct. Do not use flexible duct to change direction.

K. Connect diffusers or light troffer boots to low-pressure ducts directly or with 5 feet maximum length of flexible duct held in place with strap or clamp.

L. Set plenum doors at 6 to 12 inches above floor. Arrange door swings so that fan static pressure holds door in closed position.

M. At exterior wall louvers, seal duct to louver frame.

END OF SECTION 233100

SECTION 233300
AIR DUCT ACCESSORIES

PART 1 GENERAL

1.01 SECTION INCLUDES

A. Air turning devices/extractors.

B. Backdraft dampers - metal.

C. Combination fire and smoke dampers.

D. Duct access doors.

E. Duct test holes.

F. Fire dampers.

G. Flexible duct connectors.

H. Smoke dampers.

I. Volume control dampers.

1.02 RELATED REQUIREMENTS

A. Section 233100 - HVAC Ducts and Casings.

1.03 REFERENCE STANDARDS

A. NFPA 90A - Standard for the Installation of Air-Conditioning and Ventilating Systems.

B. NFPA 92 - Standard for Smoke Control Systems.

C. NFPA 96 - Standard for Ventilation Control and Fire Protection of Commercial Cooking Operations.

D. SMACNA (DCS) - HVAC Duct Construction Standards Metal and Flexible.

E. UL 33 - Safety Heat Responsive Links for Fire-Protection Service.

F. UL 555 - Standard for Fire Dampers.

G. UL 555C - Standard for Safety Ceiling Dampers.

H. UL 555S - Standard for Smoke Dampers.

1.04 SUBMITTALS

A. See Section 013000 - Administrative Requirements for submittal procedures.

B. Product Data: Provide for shop-fabricated assemblies including volume control dampers, duct access doors, duct test holes, and hardware used. Include electrical characteristics and connection requirements.

1.05 QUALITY ASSURANCE

A. Products Requiring Electrical Connection: Listed and classified by Underwriters Laboratories Inc. as suitable for the purpose specified and indicated.

PART 2 PRODUCTS

2.01 AIR TURNING DEVICES/EXTRACTORS

A. Multi-blade device with blades aligned in short dimension; steel or aluminum construction matching the ductwork matrial; with individually adjustable blades, mounting straps.

B. Multi-blade device with radius blades attached to pivoting frame and bracket, steel or aluminum construction, with push-pull operator strap.

2.02 BACKDRAFT DAMPERS - METAL

A. Manufacturers:

1. Louvers & Dampers, Inc, a brand of Mestek, Inc; _____: www.louvers-dampers.com/#sle.

2. Nailor Industries, Inc; _____: www.nailor.com/#sle.
3. Ruskin Company; _____: www.ruskin.com/#sle.
4. Substitutions: See Section 016000 - Product Requirements.

B. Multi-Blade, Parallel Action Gravity Balanced Backdraft Dampers: Galvanized steel, with center pivoted blades of maximum 6 inch width, with felt or flexible vinyl sealed edges, linked together in rattle-free manner with 90 degree stop, steel ball bearings, and plated steel pivot pin; adjustment device to permit setting for varying differential static pressure.

2.03 COMBINATION FIRE AND SMOKE DAMPERS

A. Manufacturers:
1. Louvers & Dampers, Inc, a brand of Mestek, Inc; _____: www.louvers-dampers.com/#sle.
2. Nailor Industries, Inc; _____: www.nailor.com/#sle.
3. Ruskin Company; _____: www.ruskin.com/#sle.
4. Substitutions: See Section 016000 - Product Requirements.

B. Fabricate in accordance with NFPA 90A, UL 555, UL 555S, and as indicated.
1. Fire Resistance per schedule on drawing:
   a. 1-1/2 hours in accordance with UL555.
   b. 3 hours in accordance with UL555.
2. Smoke Rating:
   a. Leakage Class I Smoke Damper in accordance with UL555S. A Class l smoke damper leaks no more than 8 cubic feet per minute (.23 m3/min) at 4 in. wg. (1 kPa) differential pressure.
3. Elevated Temperature Rating:
   a. 250°F.
4. Air Flow Rating per schedule on drawing:
   a. 2000 fpm.
   b. 3000 fpm.
5. Differential Pressure Rating: 4 in. wg.

C. Provide factory sleeve and collar for each damper.
1. Minimum 20 gage (1.0 mm) thickness, minimum 17 inches (432 mm) long.
2. Silicone caulk factory applied to sleeve at damper frame to comply with leakage rating requirements.

D. Multiple Blade Dampers: Fabricate with 16 gage roll formed galvanized steel frame, oil-impregnated bronze or stainless steel sleeve bearings and plated steel axles, stainless steel jamb seals, 1/8 x 1/2 inch plated steel concealed linkage, stainless steel closure spring, blade stops, and lock, and 1/2 inch actuator shaft.
1. Blades:
   a. Style: True airfoil-shaped, single piece, double skin.
   b. Action: Opposed.
   c. Material: Minimum 14 gage equivalent thickness, galvanized steel.
   d. Width: Maximum 6 inches.

E. Accessories:
1. Mounting Angles:
2. Breakaway Connections:

2.04 DUCT ACCESS DOORS

A. Manufacturers:
1. Acudor Products Inc, a Division of Nelson Industrial Inc: www.acudor.com.
2. Elgen Manufacturing, Inc: www.elgenmfg.com.
3. Lloyd Industries, Inc: www.firedamper.com/#sle.
4. Nailor Industries, Inc: www.nailor.com.

5. Ruskin Company, a brand of Johnson Controls: www.ruskin.com.
6. SEMCO LLC; _____: www.semcohvac.com/#sle.
7. Substitutions: See Section 016000 - Product Requirements.

B. Fabricate in accordance with SMACNA (DCS) and as indicated.

2.05 DUCT TEST HOLES

A. Temporary Test Holes: Cut or drill in ducts as required. Cap with neat patches, neoprene plugs, threaded plugs, or threaded or twist-on metal caps.

B. Permanent Test Holes: Factory fabricated, air tight flanged fittings with screw cap. Provide extended neck fittings to clear insulation.
1. Manufacturers:
2. Carlisle HVAC Products; Dynair Test Port with Red Cap with O-Ring Seal: www.carlislehvac.com/#sle.

2.06 FIRE DAMPERS

A. Manufacturers:
1. Louvers & Dampers, Inc, a brand of Mestek, Inc; _____: www.louvers-dampers.com/#sle.
2. Nailor Industries, Inc; _____: www.nailor.com/#sle.
3. Ruskin Company; _____: www.ruskin.com/#sle.
4. Substitutions: See Section 016000 - Product Requirements.

B. Fabricate in accordance with NFPA 90A and UL 555, and as indicated.

C. Ceiling (Radiation) Dampers: Galvanized steel, 22-gauge, 0.0299-inch frame and 16-gauge, 0.0598-inch flap, two layers of 0.125-inch thick ceramic fiber on top side and one layer on bottom side for round flaps, with locking clip.
1. Rated for one hour service in compliance with UL 555C.

D. Horizontal Dampers: Galvanized steel, 22-gauge, 0.0299-inch frame, stainless steel closure spring, and lightweight, heat-retardant, non-asbestos fabric blanket.

E. Curtain Type Dampers: Galvanized steel with interlocking blades. Provide stainless steel closure springs and latches for horizontal installations. Configure with blades out of air stream except for 1-inch pressure-class ducts up to 12 inches in height.

F. Multiple Blade Dampers: 16-gauge, 0.0598-inch galvanized steel frame and blades, oil-impregnated bronze or stainless steel sleeve bearings and plated steel axles, 1/8 by 1/2 inch plated steel concealed linkage, stainless steel closure spring, blade stops, and lock.

G. Fusible Links: UL 33, separate at 160 degrees F with adjustable link straps for combination fire/balancing dampers.

2.07 FLEXIBLE DUCT CONNECTORS

A. Fabricate in accordance with SMACNA (DCS) and as indicated.

B. Flexible Duct Connections: Fabric crimped into metal edging strip.
1. Fabric: UL listed fire-retardant neoprene coated woven glass fiber fabric to NFPA 90A, minimum density 30 oz/sq yd.
a. Net Fabric Width: Approximately 2 inches wide.

C. Leaded Vinyl Sheet: Minimum 0.55 inch thick, 0.87 lbs per sq ft, 10 dB attenuation in 10 to 10,000 Hz range.

D. Maximum Installed Length: 14 inch.

2.08 SMOKE DAMPERS

A. Manufacturers:
1. Louvers & Dampers, Inc, a brand of Mestek, Inc; _____: www.louvers-dampers.com/#sle.
2. Nailor Industries, Inc; _____: www.nailor.com/#sle.

3. Ruskin Company; _____: www.ruskin.com/#sle.
4. Substitutions: See Section 016000 - Product Requirements.

B. Fabricate in accordance with NFPA 90A and UL 555S, and as indicated.

C. Dampers: UL Class 1 airfoil blade type smoke damper, normally open automatically operated by pneumatic actuator.

D. Electro Thermal Link: Fusible link melting at 165 degrees F; 120 volts, single phase, 60 Hz; UL listed and labeled.

2.09 VOLUME CONTROL DAMPERS

A. Manufacturers:
1. Louvers & Dampers, Inc, a brand of Mestek, Inc: www.louvers-dampers.com.
2. Nailor Industries, Inc: www.nailor.com.
3. Ruskin Company, a brand of Johnson Controls: www.ruskin.com.
4. Substitutions: See Section 016000 - Product Requirements.

B. Fabricate in accordance with SMACNA (DCS) and as indicated.

C. Single Blade Dampers:
1. Fabricate for duct sizes up to 6 by 30 inch.

D. Multi-Blade Damper: Fabricate consisting of opposed blades with maximum blade sizes 8 by 72 inches. Assemble center- and edge-crimped blades in prime-coated or galvanized-channel frame with suitable hardware.

E. End Bearings: Except in round ducts 12 inches and smaller, provide end bearings. On multiple blade dampers, provide oil-impregnated nylon, thermoplastic elastomer, or sintered bronze bearings.

F. Quadrants:
1. Provide locking, indicating quadrant regulators on single and multi-blade dampers.
2. On insulated ducts mount quadrant regulators on stand-off mounting brackets, bases, or adapters.
3. Where rod lengths exceed 30 inches provide regulator at both ends.

PART 3 EXECUTION

3.01 PREPARATION

A. Verify that electric power is available and of the correct characteristics.

3.02 INSTALLATION

A. Install accessories in accordance with manufacturer's instructions, NFPA 90A, and follow SMACNA (DCS). See Section 233100 for duct construction and pressure class.

B. Provide backdraft dampers on exhaust fans or exhaust ducts nearest to outside and where indicated.

C. Provide duct access doors for inspection and cleaning before and after filters, coils, fans, automatic dampers, at fire dampers, combination fire and smoke dampers, and elsewhere as indicated. Provide for cleaning kitchen exhaust ducts in accordance with NFPA 96 Provide minimum 8 by 8 inch size access door for hand and shoulder access, or as indicated on drawings. Provide minimum 4 by 4 inch size access door for balancing dampers only. Review locations prior to fabrication.

D. Provide duct test holes where indicated and required for testing and balancing purposes.

E. Provide fire dampers, combination fire and smoke dampers, and smoke dampers at locations indicated, where ducts and outlets pass through fire-rated components, and where required by authorities having jurisdiction. Install with required perimeter mounting angles, sleeves, breakaway duct connections, corrosion resistant springs, bearings, bushings and hinges.

F. Install smoke dampers and combination smoke and fire dampers in accordance with NFPA 92.

G. At fans and motorized equipment associated with ducts, provide flexible duct connections immediately adjacent to the equipment.

H. For fans developing static pressures of 5.0 inches and over, cover flexible connections with leaded vinyl sheet, held in place with metal straps.

I. Provide balancing dampers at points on supply, return, and exhaust systems where branches are taken from larger ducts as required for air balancing. Install minimum two duct widths from duct take-off.

J. Provide balancing dampers on duct take-off to diffusers, grilles, and registers, regardless of whether dampers are specified as part of the diffuser, grille, or register assembly.

END OF SECTION 233300

SECTION 233423
HVAC POWER VENTILATORS

PART 1 GENERAL

1.01 RELATED REQUIREMENTS

1.02 REFERENCE STANDARDS

A. AMCA (DIR) - (Directory of) Products Licensed Under AMCA International Certified Ratings Program.

B. AMCA 99 - Standards Handbook.

C. AMCA 204 - Balance Quality and Vibration Levels for Fans.

D. AMCA 210 - Laboratory Methods of Testing Fans for Certified Aerodynamic Performance Rating.

E. AMCA 300 - Reverberation Room Methods of Sound Testing of Fans.

F. AMCA 301 - Methods for Calculating Fan Sound Ratings from Laboratory Test Data.

G. NEMA EN 10250 - Enclosures for Electrical Equipment (1000 Volts Maximum).

H. UL 705 - Power Ventilators.

1.03 SUBMITTALS

A. See Section 013000 - Administrative Requirements for submittal procedures.

B. Product Data: Provide data on fans and accessories, including fan curves with specified operating point plotted, power, rpm, sound power levels at rated capacity, and electrical characteristics and connection requirements.

C. Manufacturer's Instructions: Indicate installation instructions.

D. Maintenance Data: Include instructions for lubrication, motor and drive replacement, spare parts list, and wiring diagrams.

1.04 FIELD CONDITIONS

A. Permanent ventilators may be used for ventilation during construction only after ductwork is clean, filters are in place, bearings have been lubricated, and fan has been test run under observation.

PART 2 PRODUCTS

2.01 MANUFACTURERS

A. Greenheck Fan Corporation; _____: www.greenheck.com/#sle.

B. Loren Cook Company; _____: www.lorencook.com/#sle.

C. PennBarry, Division of Air System Components; _____: www.pennbarry.com/#sle.

2.02 POWER VENTILATORS - GENERAL

A. Static and Dynamically Balanced: Comply with AMCA 204.

B. Performance Ratings: Comply with AMCA 210, bearing certified rating seal.

C. Sound Ratings: Comply with AMCA 301, tested to AMCA 300, bearing certified sound ratings seal.

D. Fabrication: Comply with AMCA 99.

E. UL Compliance: UL 705, listed, labeled, designed, manufactured, and tested.

F. Electrical Components: Listed and classified by Underwriters Laboratories Inc. as suitable for the purpose specified and indicated.

G. Enclosed Safety Switches: Comply with NEMA EN 10250.

2.03 INLINE CENTRIFUGAL FANS AND BLOWERS

A. Manufacturers:
   1. Greenheck Fan Corporation: www.greenheck.com/#sle.
   2. Loren Cook Company: www.lorencook.com/#sle.
   3. PennBarry, Division of Air System Components; _____: www.pennbarry.com/#sle.
   4. Substitutions: See Section 016000 - Product Requirements.

B. Centrifugal Fan Unit: V-belt or direct driven, with galvanized steel housing lined with acoustic insulation, resiliently-mounted motor, gravity backdraft damper in discharge.
   1. Direct-driven, resiliently mounted motor, heavy-duty ball bearings, galvanized steel housing for indoor service, and removable service panels.

C. Forward Curved Blower:
   1. Operation: As indicated on drawings.
   2. Accessories: Provide backdraft damper and external vibration isolator spring.

D. Disconnect Switch: Cord and plug-in housing for thermal overload protected motor.

E. Sheaves: Cast iron or steel, dynamically balanced, bored to fit shafts and keyed; variable and adjustable pitch motor sheaves selected so required rpm gets reached with sheaves set at mid-position; fan shaft with self-aligning prelubricated ball bearings.

PART 3 EXECUTION

3.01 INSTALLATION

A. Install in accordance with manufacturer's instructions.

END OF SECTION 233423

SECTION 233600
AIR TERMINAL UNITS

PART 1 GENERAL

1.01 SECTION INCLUDES

A. Variable volume terminal units.

B. Integral heating coils.

C. Integral damper motor operators.

1.02 RELATED REQUIREMENTS

A. Section 011000 - Summary: Owner furnished air terminal units (excess stock).

B. Section 230548 - Vibration and Seismic Controls for HVAC.

C. Section 233100 - HVAC Ducts and Casings.

D. Section 233300 - Air Duct Accessories.

E. Section 233700 - Air Outlets and Inlets.

1.03 REFERENCE STANDARDS

A. ASTM A492 - Standard Specification for Stainless Steel Rope Wire.

B. ASTM A603 - Standard Specification for Metallic-Coated Steel Structural Wire Rope.

C. NFPA 90A - Standard for the Installation of Air-Conditioning and Ventilating Systems.

D. SMACNA (SRM) - Seismic Restraint Manual Guidelines for Mechanical Systems.

E. UL 181 - Standard for Factory-Made Air Ducts and Air Connectors.

1.04 SUBMITTALS

A. See Section 013000 - Administrative Requirements for submittal procedures.

B. Product Data: Provide data indicating configuration, general assembly, and materials used in fabrication. Include catalog performance ratings that indicate airflow, static pressure, and NC designation. Include electrical characteristics and connection requirements.

C. Shop Drawings: Indicate configuration, general assembly, and materials used in fabrication, and electrical characteristics and connection requirements.

1. Include schedules listing discharge and radiated sound power level for each of the second through sixth-octave bands at inlet static pressures of 1 to 4 in-wc.

D. Manufacturer's Installation Instructions: Indicate support and hanging details, installation instructions, recommendations, and service clearances required.

E. Operation and Maintenance Data: Include manufacturer's descriptive literature, operating instructions, maintenance and repair data, and parts lists. Include directions for resetting constant-volume regulators.

F. Warranty: Submit manufacturer warranty and ensure forms have been completed in Owner's name and registered with manufacturer.

1.05 QUALITY ASSURANCE

A. Products Requiring Electrical Connection: Listed and classified by Underwriters Laboratories Inc. as suitable for the purpose specified and indicated.

1.06 WARRANTY

A. See Section 017800 - Closeout Submittals for additional warranty requirements.

B. Provide five year manufacturer warranty for air terminal units.

PART 2 PRODUCTS

2.01 MANUFACTURERS

A. Titus;

B. The Trane Company;

C. Price Industries;

D. Tuttle and Bailey;

E. Substitutions: See Section 016000 - Product Requirements.

2.02 MANUFACTURED UNITS

A. Ceiling mounted variable air volume supply air control terminals for connection to single duct, central air systems, with electronic variable volume controls,, hot water heating coils.

B. Identify each terminal unit with clearly marked identification label and air flow indicator. Include unit nominal air flow, maximum factory set airflow, minimum factory set air flow, and coil type.

2.03 SINGLE DUCT VARIABLE VOLUME UNITS

A. Basic Assembly:
   1. Casings: Minimum 22 gage galvanized steel.
   2. Lining: Minimum 1 inch thick neoprene or vinyl coated fibrous glass insulation, 1.5 lb/cu ft density, meeting NFPA 90A requirements and UL 181 erosion requirements. Face lining with mylar film.
   3. Plenum Air Inlets: Round stub connections for duct attachment.
   4. Plenum Air Outlets: S slip and drive connections.

B. Basic Unit:
   1. Configuration: Air volume damper assembly inside unit casing. Locate control components inside protective metal shroud.
   2. Volume Damper: Construct of galvanized steel with peripheral gasket and self lubricating bearings; maximum damper leakage: 2 percent of design air flow at 1 inches rated inlet static pressure.
   3. Mount damper operator to position damper normally open.

C. Hot Water Heating Coil:
   1. Construction: 1/2 inch copper tube mechanically expanded into aluminum plate fins, maximum 12 fins per inch, leak tested under water to 200 psig pressure, factory installed.Maximum 12 fins per inch.
   2. Capacity: Based on 180 degree F entering water, 150 degree F leaving water and indicated heating air volume.
      a. Coil performance data shall be based on test run in accordance with ARI Standard 410.

D. Controls:
   1. Factory provides all safety controls.
   2. Temperture control provides temperature controls. Refer to Section 230913 and Section 230993.

PART 3 EXECUTION

3.01 INSTALLATION

A. Install in accordance with manufacturer's instructions.

B. Install the inlets of air terminal units and air flow sensors a minimum of four duct diameters from elbows, transitions, and duct takeoffs.

C. Provide ceiling access doors or locate units above easily removable ceiling components.

D. Support units individually from structure with wire rope complying with ASTM A492 and ASTM A603 in accordance with SMACNA (SRM). See Section 23 0548.

E. Do not support from ductwork.

F. Connect to ductwork in accordance with Section 233100.

G. Verify that electric power is available and of the correct characteristics.

3.02 ADJUSTING

A. Reset volume with damper operator attached to assembly allowing flow range modulation from 100 percent of design flow to scheduled minimum airflow for cooling and schedule heating airflow.

END OF SECTION 233600

SECTION 233700
AIR OUTLETS AND INLETS

PART 1 GENERAL

1.01 SECTION INCLUDES

A. Diffusers:

B. Rectangular ceiling diffusers.

C. Registers/grilles:
   1. Ceiling-mounted, exhaust and return register/grilles.
   2. Ceiling-mounted, supply register/grilles.
   3. Wall-mounted, exhaust and return register/grilles.

D. Door grilles.

E. Louvers:

F. Louvered penthouses.

G. Roof hoods.

H. Goosenecks.

1.02 REFERENCE STANDARDS

A. AMCA 500-L - Laboratory Methods of Testing Louvers for Rating.

B. ASHRAE Std 70 - Method of Testing the Performance of Air Outlets and Air Inlets.

C. SMACNA (DCS) - HVAC Duct Construction Standards Metal and Flexible.

1.03 SUBMITTALS

A. See Section 013000 - Administrative Requirements for submittal procedures.

B. Product Data: Provide data for equipment required for this project. Review outlets and inlets as to size, finish, and type of mounting prior to submission. Submit schedule of outlets and inlets showing type, size, location, application, and noise level.

C. Project Record Documents: Record actual locations of air outlets and inlets.

1.04 QUALITY ASSURANCE

A. Test and rate air outlet and inlet performance in accordance with ASHRAE Std 70.

B. Test and rate louver performance in accordance with AMCA 500-L.

PART 2 PRODUCTS

2.01 MANUFACTURERS

A. American Louver Company; ALC Grilles and Registers: www.americanlouver.com/#sle.

B. Hart & Cooley, Inc: www.hartandcooley.com/#sle.

C. Krueger-HVAC, Division of Air System Components: www.krueger-hvac.com.

D. Price Industries: www.price-hvac.com/#sle.

E. Titus, a brand of Air Distribution Technologies: www.titus-hvac.com.

F. Tuttle and Bailey: www.tuttleandbailey.com/#sle.

G. Substitutions: Not permitted.

2.02 RECTANGULAR CEILING DIFFUSERS

A. Type: Provide square, stamped, multi-core, square, adjustable pattern, stamped, multi-core, square and rectangular, multi-louvered, square and rectangular, adjustable pattern, and multi-louvered diffuser to discharge air in 360 degree, one way, two way, three way, and four way pattern with sectorizing baffles where indicated.

B. Connections: As indicated on drawings, otherwise round.

C. Frame: Provide surface mount, snap-in, inverted T-bar, and spline type. In plaster ceilings, provide plaster frame and ceiling frame.

D. Fabrication: Steel with baked enamel finish.

E. Color: As indicated.

F. Accessories: Provide radial opposed blade volume control damper per schedule on drawing; sectorizing baffle with damper adjustable from diffuser face.

2.03 CEILING SUPPLY REGISTERS/GRILLES

A. Type: Streamlined and individually adjustable curved blades to discharge air along face of grille, two-way deflection.

B. Frame: 1-1/4 inch margin with countersunk screw mounting and gasket.

C. Construction: Made of steel with factory enamel finish.

D. Color: As indicated.

E. Damper: Integral, gang-operated, opposed blade type with removable key operator, operable from face.

2.04 CEILING EXHAUST AND RETURN REGISTERS/GRILLES

A. Type: Streamlined blades, 3/4 inch minimum depth, 3/4 inch maximum spacing, with blades set at 45 degrees, vertical face.

B. Frame: 1-1/4 inch margin with countersunk screw mounting.

C. Color: As indicated.

D. Damper: Integral, gang-operated, opposed blade type with removable key operator, operable from face where not individually connected to exhaust fans.

E. Gymnasiums: Provide front pivoted or welded in place blades, securely fastened to be immobile.

2.05 WALL SUPPLY REGISTERS/GRILLES

A. Type: Streamlined and individually adjustable curved blades to discharge air along face of grille with two-way deflection.

B. Frame: 1-1/4 inch margin with countersunk screw mounting and gasket.

C. Fabrication: Aluminum extrusions with factory clear lacquer finish.

D. Color: As indicated.

E. Damper: Integral, gang-operated, opposed blade type with removable key operator, operable from face.

2.06 WALL EXHAUST AND RETURN REGISTERS/GRILLES

A. Type: Streamlined blades, 3/4 inch minimum depth, 3/4 inch maximum spacing, with spring or other device to set blades, vertical face.

B. Frame: 1-1/4 inch margin with countersunk screw mounting.

C. Fabrication: Steel frames and blades, with factory baked enamel finish.

D. Color: As indicated on the drawings.

E. Damper: Integral, gang-operated, opposed blade type with removable key operator, operable from face.

F. Gymnasiums: Provide front pivoted or welded in place blades, securely fastened to be immobile.

PART 3 EXECUTION

3.01 INSTALLATION

A. Install in accordance with manufacturer's instructions.

B. Check location of outlets and inlets and make necessary adjustments in position to comply with architectural features, symmetry, and lighting arrangement.

C. Install diffusers to ductwork with air tight connection.

D. Provide balancing dampers on duct take-off to diffusers and grilles and registers, despite whether dampers are specified as part of diffuser, or grille and register assembly.

E. Paint ductwork visible behind air outlets and inlets matte black, see Section 099123.

END OF SECTION 233700

SECTION 237313
MODULAR INDOOR CENTRAL-STATION AIR-HANDLING UNITS

PART 1 GENERAL

1.01 SECTION INCLUDES

A. Casing construction.
B. Fan section.
C. Coil section.
D. Filter and air cleaner section.
E. Damper section.
F. Airflow measurement.
G. Total energy recovery wheel section.
H. Desiccant wheel.
I. Access section.
J. Air blender section.
K. Turning and discharge plenum section.

1.02 RELATED REQUIREMENTS

A. Section 230593 - Testing, Adjusting, and Balancing for HVAC.
B. Section 230719 - HVAC Piping Insulation.
C. Section 233300 - Air Duct Accessories: Flexible duct connections.
D. Section 251400 - Integrated Automation Local Control Units.

1.03 REFERENCE STANDARDS

A. ABMA STD 9 - Load Ratings and Fatigue Life for Ball Bearings.
B. ABMA STD 11 - Load Ratings and Fatigue Life for Roller Bearings.
C. AHRI 410 - Forced-Circulation Air-Cooling and Air-Heating Coils.
D. AHRI 430 (I-P) - Standard for Performance Rating of Central Station Air-handling Unit Supply Fans.
E. AHRI 1060 (I-P) - Performance Rating of Air-to-Air Exchangers for Energy Recovery Ventilation Equipment.
F. AMCA (DIR) - (Directory of) Products Licensed Under AMCA International Certified Ratings Program.
G. AMCA 210 - Laboratory Methods of Testing Fans for Certified Aerodynamic Performance Rating.
H. AMCA 300 - Reverberation Room Methods of Sound Testing of Fans.
I. AMCA 301 - Methods for Calculating Fan Sound Ratings from Laboratory Test Data.
J. AMCA 500-D - Laboratory Methods of Testing Dampers for Rating.
K. AMCA 500-L - Laboratory Methods of Testing Louvers for Rating.
L. AMCA 611 - Certified Ratings Program - Product Rating Manual for Airflow Measurement Stations.
M. ASHRAE Std 62.1 - Ventilation for Acceptable Indoor Air Quality.
N. ASHRAE Std 90.1 I-P - Energy Standard for Buildings Except Low-Rise Residential Buildings.
O. ASHRAE Std 135 - BACnet - A Data Communication Protocol for Building Automation and Control Networks.

P. NEMA MG 00001 - Motors and Generators.

Q. NFPA 70 - National Electrical Code.

R. NFPA 90A - Standard for the Installation of Air-Conditioning and Ventilating Systems.

S. SMACNA (DCS) - HVAC Duct Construction Standards Metal and Flexible.

T. UL (DIR) - Online Certifications Directory.

U. UL 181 - Standard for Factory-Made Air Ducts and Air Connectors.

V. UL 508 - Industrial Control Equipment.

W. UL 1812 - Ducted Heat Recovery Ventilators.

1.04 ADMINISTRATIVE REQUIREMENTS

A. Preinstallation Meeting: Conduct a preinstallation meeting one week prior to the start of the work of this section; require attendance by all affected installers.

B. Sequencing: Ensure that utility connections are achieved in an orderly and expeditious manner.

1.05 SUBMITTALS

A. See Section 013000 - Administrative Requirements for submittal procedures.

B. Product Data:
   1. Published Literature: Indicate dimensions, weights, capacities, ratings, gauges and finishes of materials, and electrical characteristics and connection requirements.
   2. Filters: Data for filter media, filter performance data, filter assembly, and filter frames.
   3. Fans: Performance and fan curves with specified operating point clearly plotted, power, RPM.
   4. Air Coil: Performance at design condition.
   5. Sound Power Level Data: Fan outlet and casing radiation at rated capacity.
   6. Electrical Requirements: Power supply wiring including wiring diagrams for interlock and control wiring, clearly indicating factory-installed and field-installed wiring.
   7. Sustainable Design Documentation: Submit manufacturer's product data on refrigerant used, showing compliance with specified requirements.

C. Shop Drawings: Indicate assembly, unit dimensions, weight loading, required clearances, construction details, field connection details, and electrical characteristics and connection requirements.

D. Manufacturer's Instructions: Include installation instructions.

E. Maintenance Data: Include instructions for lubrication, filter replacement, motor and drive replacement, spare parts lists, and wiring diagrams.

1.06 REGULATORY REQUIREMENTS

A. Products Requiring Electrical Connection: Listed and classified by UL (DIR) as suitable for the purpose specified and indicated.

1.07 DELIVERY, STORAGE, AND HANDLING

A. Accept products on site in factory-fabricated protective containers, with factory-installed shipping skids and lifting lugs. Inspect for damage.

B. Store in clean dry place and protect from weather and construction traffic.

C. Handle carefully to avoid damage to components, enclosures, and finish.

D. Do not operate units until:
   1. ductwork is clean
   2. filters are in place
   3. bearings lubricated
   4. condensate properly trapped

5. piping connections verified
6. leak tested
7. belts aligned and tensioned
8. all shipping braces have been removed
9. fan has been test run under observation

PART 2 PRODUCTS

2.01 MANUFACTURERS

A. Daikin Applied: www.daikinapplied.com.

B. Trane Inc: www.trane.com.

C. York International Corporation / Johnson Controls Inc: www.york.com.

D. Aaon Heating and Cooling Products[<>]: www.aaon.com

E. Substitutions: See Section 016000 - Product Requirements.

2.02 CASING CONSTRUCTION

A. Full Perimeter Base Rail with Integral Base-Rails :
   1. Construct of galvanized steel.
   2. Provide base rail of sufficient height to raise unit for external trapping of condensate drain pans.

B. Casing:
   1. Construct of one piece, insulated, double wall panels.
   2. Provide mid-span, no through metal, internal thermal break.
   3. Construct outer panels of galvanized steel and inner panels of galvanized steel.
   4. Casing Air Pressure Performance Requirements:
      a. Able to withstand up to 8 in-wc positive or negative static pressure.
      b. Not to exceed 0.0042 inches per inch deflection at 1.5 times design static pressure up to a maximum of plus 8 in-wc in positive pressure sections and minus 8 in-wc in negative pressure sections.
   5. Stainless steel fasteners or screws for outdoor units.

C. Access Doors:
   1. Construction, thermal and air pressure performance same as casing.
   2. Provide surface mounted handles on hinged, swing doors with removable door hold open bracket.

D. Outside Air and Exhaust Air Weather Hood:
   1. Fabricate from same material as casing outer panel.
   2. Extend hood past perimeter of unit casing opening so as not to instruct airflow path.
   3. Paint hoods with same finish as external surface of outdoor units.
   4. Provide inlet hood for each fresh air damper with a sine wave moisture eliminator to prevent entrainment of water into the unit from outside air.
   5. Provide exhaust hoods or louver for all exhaust air openings.
   6. Size each hood for 100 percent of nominal fresh air damper capacities.

E. Unit Flooring: Construct with sufficient strength to support expected people and equipment loads associated with maintenance activities.

F. Casing Leakage: Seal joints and provide airtight access doors so that air leakage does not exceed one percent of design flow at the specified casing pressure.

G. Insulation:
   1. Provide minimum thermal thickness of 12 R throughout.
   2. Completely fill panel cavities in each direction to prevent voids and settling.
   3. Comply with NFPA 90A.

H. Drain Pan Construction:

1. Provide cooling coil sections with an insulated, double wall, stainless steel drain pan complying with ASHRAE 62.1 for indoor air quality and sufficiently sized to collect condensate.
2. Slope in two planes to promote positive drainage and eliminate stagnate water conditions.
3. Locate outlet of sufficient diameter at lowest point of pan to prevent overflow at normal operating conditions.
4. Provide threaded drain connections constructed of drain pan material, extended sufficient distance beyond the base to accommodate field installed, condensate drain trapping.

I. Louvers: Stationary, of galvanized steel, 4 inches deep with plenum, nylon bearings, 1/2-inch mesh, 0.04-inch galvanized wire bird screen in aluminum frame, and bearing AMCA Certified Ratings Seal in accordance with AMCA 500-L. Furnish adjustable louvers with hollow vinyl bulb edging on blades and foam side stops to limit leakage to maximum 2 percent at 4 in-wc differential pressure when sized for 2000 fpm face velocity.

J. Provide factory installed service module including GFCI receptacle independent from load side; designed to receive power from field supplied 120 volt source.

K. Finish:
1. Indoor Units:
a. Color: Manufacturer's standard color.

2.03 FAN OR FAN ARRAY SECTION

A. Type: Air foil, double width, double inlet, centrifugal plenum type fan.

B. Performance Ratings: Determined in accordance with AMCA 210 and labeled with AMCA Certified Rating Seal.

C. Sound Ratings: AMCA 301; tested to AMCA 300 and label with AMCA Certified Sound Rating Seal.

D. Bearings: Self-aligning, grease lubricated, with lubrication fittings extended to exterior of casing with plastic tube and grease fitting rigidly attached to casing.

E. External Motor Junction Box: Factory mount NEMA 4 external junction box and connect to extended motor leads from internally mounted motors.

F. Motor Wiring Conduit: Factory wire fan motor wiring to the unit mounted starter-disconnect, variable frequency drive, and external motor junction box.

G. Flexible Duct Connections:
1. For separating fan, coil, and adjacent sections.

H. Supply Fan Performance: As scheduled on drawing.

I. Drives:
1. Bearings: Heavy duty pillow block type, ball bearings with ABMA STD 9 L-10 life at 50 000 hours.
2. Shafts: Solid, hot rolled steel, ground and polished, with key-way, and protectively coated with lubricating oil.
3. Motor Safety Factor: 1.5

2.04 COIL SECTION

A. Casing: Provide access to both sides of coils. Enclose coils with headers and return bends exposed outside casing. Slide coils into casing through removable end panel with blank off sheets and sealing collars at connection penetrations.

B. Drain Pans: 24 inch downstream of coil and down spouts for cooling coil banks more than one coil high.

C. Eliminators: Three break of galvanized steel, mounted over drain pan.

D. Air Coils:

1. Certify capacities, pressure drops, and selection procedures in accordance with AHRI 410.

E. Fabrication:
1. Tubes: 5/8 inch OD seamless copper expanded into fins, brazed joints.
2. Fins: Aluminum.
3. Casing: Die formed channel frame of galvanized steel.

F. Water Heating Coils:
1. Headers: Cast iron, seamless copper tube, or prime coated steel pipe with brazed joints.
2. Configuration: Drainable, with threaded plugs for drain and vent; serpentine type with return bends on smaller sizes and return headers on larger sizes.
3. See air handling unit schedule on drawing for coil performance.

G. Water Cooling Coils:
1. Headers: Cast iron, seamless copper tube, or prime coated steel pipe with brazed joints.
2. Configuration: Drainable, with threaded plugs for drain and vent; threaded plugs in return bends and in headers opposite each tube.
3. Performance: As scheduled on drawing.

2.05 FILTER AND AIR CLEANER SECTION

A. General: Provide filter sections with filter racks, minimum of one access door for filter removal, and filter block-offs to prevent air bypass.

B. Pleated Media Filters:
1. Media: 2 inch, 100 percent synthetic fibers, continuously laminated to a grid with water repellent adhesive, and capable of operating up to a maximum of 625 fpm without loss of efficiency and holding capacity.
2. Frame: Steel wire grid.
3. Minimum Efficiency Reporting Value: 5 MERV when tested in accordance with ASHRAE Std 52.2.

2.06 DAMPER SECTION

A. Mixing Section: Provide a functional section to support the damper assembly for modulating the volume of outdoor, return, and exhaust air.

B. Damper Blades:
1. Double-skin airfoil design with metal, compressible jamb seals and extruded-vinyl blade-edge seals on each blade.
2. Self-lubricating stainless steel or synthetic sleeve bearings.
3. Comply with ASHRAE Std 90.1 I-P for rated maximum leakage rate.
4. Provide leakage testing and pressure ratings in compliance with AMCA 500-D test methods.
5. Arrange in parallel or opposed-blade configuration.

2.07 AIRFLOW MEASUREMENT

A. Airflow Meter:
1. Provide airflow measurement system to directly measure fan airflow or measure differential pressure that can be used to calculate airflow without interfering with submitted airflow performance and noise levels.
2. Accuracy: Plus/minus 5 percent when operating within the stable operating region of the fan curve.

B. Airflow Measurement Station:
1. Provide factory installed, airflow measurement station tested in accordance with AMCA 611 and bearing the AMCA Ratings Seal for Airflow Measurement Performance.
2. Station Location: Install in outdoor and return opening(s) to measure airflow.
3. Damper Blades:
a. Galvanized steel or extruded aluminum construction.

b. Housed in galvanized steel or extruded aluminum frame and mechanically fastened to a rotating axle rod.
c. Comply with ASHRAE Std 90.1 I-P for rated maximum leakage rate.

4. Measurement Range: Minimum of 15 percent to 100 percent of unit nominal flow.
5. Operation: Provide low voltage signal corresponding to actual airflow for controlling and documenting airflow.
6. Accuracy: Plus/minus 5 percent.

2.08 TOTAL ENERGY RECOVERY WHEEL SECTION

A. Certified in accordance with AHRI 1060 (I-P) and UL 1812 for mechanical, electrical, and fire safety.

B. Wheel Construction:
1. Dessicant Properties:
a. Factory coated.
b. Washable using standard detergent or alkaline based coil cleaner.
c. Resistant to high levels of humidity.
2. Construct housing of stainless steel, aluminum, or galvanized steel.
3. Factory set adjustable diameter seals and self-adjusting perimeter seals.
4. Permanently sealed and lubricated wheel bearings.
5. Motor:
a. Thermally protected.
b. Factory mounted.

C. Maintenance and Access Features:
1. Access doors upstream and downstream of the wheel cassette.
2. Removable wheel segments to facilitate maintenance and cleaning.
3. Adequate space for cleaning, service, and maintenance.

D. Controls:
1. Wheel Control: Damper control of recovery capacity to 40 percent of initial total recovery capacity.

2.09 ACCESS SECTION

A. Provide where indicated on drawings to allow for inspection, cleaning, and maintenance of field-installed components.

B. Construct access doors same as previously specified within this Section.

2.10 AIR BLENDER SECTION

A. Provide factory engineered air mixers incorporating fixed blades with no moving parts.

B. Construction:
1. Welded and mechanically fastened.
2. Finish: Galvanized.

C. Factory install with adequate distances upstream and downstream, based on cataloged performance with a minimum, effectiveness of 70 percent outside air or within plus/minus 6 degrees F of theoretical mixed air temperature, at a minimum distance of one mixer diameter downstream of the mixer.

D. Include pressure loss due to mixer design and mixer-to-plenum ratio in the pressure drop rating for the static air mixer.

2.11 TURNING AND DISCHARGE PLENUM SECTION

A. Provide plenum to efficiently turn and discharge air.
1. Scale plenum vertical height to accommodate discharge duct height.
2. Scale plenum horizontal length to accommodate required dimensional constraints.

B. Acoustical Liner:

1. Fabricate from corrosion-proof, perforated stainless steel with completely encapsulated fiberglass insulation.
2. Prevent breakaway, flake off, or delamination when tested at 9000 fpm in accordance with UL 181.

2.12 OPERATING CONTROLS - VARIABLE VOLUME UNITS

A. Coordinate requirements with Automatic Controls Equipment Systems (ACES) inc., Justin Vogt at (314) 722-2727. The coordination must occur prior to submit the bid.

B. The operation control panel and necessary control devices shall be provided and installed by ACES. The unit manufacturer shall provide control compartment that is adquate to fit all control components.

C. The manufacturer shall furnish all necessary safety controls.

D. Unit shall be equipped with hot gas by-pass control on the lead refrigeration stage to protect against evaporator frosting at low air flows and suction pressures.

2.13 FAN MOTOR CONTROLS AND DDC CONTROLS

A. Combination Starter-Disconnects:
1. Provide combination starter-disconnect for each fan motor.
2. Factory mount in full metal enclosure and wire to fan motor.
3. Mount starter-disconnect on fan section externally within a dedicated controls section or housed fan section.
    a. Indoor unit: starter-disconnect in a NEMA 1 enclosure.
    b. Outdoor unit: starter-disconnect in a NEMA 3R enclosure.
4. Include circuit breaker disconnect with through-the-door interlocking handle for externally mounted starters, spring loaded, and designed to rest only in the full and lockable ON or OFF state.
5. Allow enclosure entry via a concealed defeater mechanism when the handle is in the ON position.
6. Include the following items:
    a. Hand-Off-Auto (H-O-A) switch.
    b. Two normally open auxiliary contacts.
    c. Overload heaters.
    d. Manual reset overloads.
    e. 120V control transformer with fusing and secondary grounding.
7. Include power wiring from the starter control transformer to the secondary control system transformers, and start-stop wiring from the direct digital controller start-stop relay to the starter H-O-A switch.

B. Combination VFD - Disconnects:
1. Provide factory mounted, combination VFD - disconnect for each fan motor.
2. Factory mount in full metal enclosure and wire to fan motor.
3. Mount VFD-disconnect on fan section externally within a dedicated controls section or housed fan section.
    a. Indoor unit: starter-disconnect in a NEMA 1 enclosure.
    b. Outdoor unit: starter-disconnect in a NEMA 3R enclosure.
4. Include circuit breaker disconnect with through-the-door interlocking handle for externally mounted starters, spring loaded, and designed to rest only in the full and lockable ON or OFF state.
5. Allow enclosure entry via a concealed defeater mechanism when the handle is in the ON position.
6. Include control transformer with sufficient capacity to support the following items:
    a. VFD and controls.
    b. Binary output on-off wiring.
    c. Analog output speed-signal wiring.

d. Wires that interface between VFD and direct digital controller.

7. Mount starter on fan section externally within a dedicated controls section or housed fan section.
   a. Indoor unit: starter-disconnect in a NEMA 1 enclosure.
   b. Outdoor unit: starter-disconnect in a NEMA 3R enclosure.

C. Factory Installed Direct Digital Control (DDC) System:
1. DDC Controller:
   a. Provide panel-mounted, factory wired, application-specific (ASC) or advanced application-programmable controller (APC).
   b. ASC or APC: See Section 251400 except for manufacturer-provided units that are fully compatible with site BAS, BMS, SCADA, or Integrated Automation System.
   c. Include built-in or provide local screen push-button interface for local monitoring, adjustment, tuning, data logging, and troubleshooting.
   d. Factory configured to handle internal equipment using manufacturer's specific instructions unless directly specified on listed sequence of operation.
   e. Factory wired into panel-mounted auxiliary relay(s) to handle scheduled or interlocked cycle-duty operation of externally linked equipment as indicated on drawings.
   f. Factory installed, wired, programmed, and tested, including each component.
   g. BAS, SCADA, or other Integrated Automation Link: ASHRAE Std 135 BACnet MS/TP.
2. Mixing Section Dampers:
   a. Outdoor Air Damper: Fail closed using spring-return actuator.
   b. Return Air Damper: Fail open using spring-return actuator.
3. Temperature Sensors: Provide for fan discharge, supply, return, mixed air, and coil section. Use averaging type for coil sections.
4. Low Limit Switches:
   a. Factory wire to momentary push-button reset circuit.
   b. Provide separate low limit for each coil in a coil stack.
5. Fan Status: Provide pressure switch to determine running status.
6. Loaded Filter Section: Tube to filter section to indicate sectional filter status.
7. Condensate Overflow Switches:
   a. Comply with UL 508; shut down unit in the event of primary drain blockage.
   b. Factory install float switch in drain pan to detect high water condensate level.
   c. Locate float switch above primary drain line connection and below drain pan rim.
8. Relays, Unit-Mounted, Output-Linked: Provide for external loads including motor starters, relief dampers, pumps, condensing units, and other equipment as specified in the drawings.
9. DDC control module and associated control devices are provided by AECS.
10. Factory test all components.

PART 3 EXECUTION

3.01 INSTALLATION

A. Install in accordance with manufacturer's instructions.

B. Bolt sections together with gaskets.

C. Isolate fan section with flexible duct connections.

D. Install flexible duct connections between fan inlet and discharge ductwork and air handling unit sections. Ensure that metal bands of connectors are parallel with minimum 1 inch flex between ductwork and fan while running.

E. Provide fixed sheaves required for final air balance.

F. Make connections to coils with unions or flanges.

G. Hydronic Coils:
   1. Hydronic Coils: Connect water supply to leaving air side of coil (counterflow arrangement).
   2. Provide shut-off valve on supply line and lockshield balancing valve with memory stop on return line.
   3. Locate water supply at bottom of supply header and return water connection at top.
   4. Provide manual air vents at high points complete with stop valve.
   5. Ensure water coils are drainable and provide drain connection at low points.

H. Insulate coil headers located outside airflow as specified for piping; see Section 230719.

I. Cooling Coils:
   1. Pipe drain and overflow to nearest floor drain.

END OF SECTION 237313

SECTION 237413
PACKAGED OUTDOOR CENTRAL-STATION AIR-HANDLING UNITS

PART 1 GENERAL

1.01 SECTION INCLUDES

A. Packaged roof top unit.

B. Unit controls.

C. Roof mounting curb and base.

1.02 RELATED REQUIREMENTS

A. Section 230913 - Instrumentation and Control Devices for HVAC: Control components.

B. Section 230923 - Direct-Digital Control System for HVAC

C. Section 230993 - Sequence of Operation for HVAC Controls

D. Section 260583 - Wiring Connections: Installation and wiring of thermostats and other controls components; wiring from unit terminal strip to remote panel.

E. Section 260583 - Wiring Connections: Electrical characteristics and wiring connections.

1.03 REFERENCE STANDARDS

A. AHRI 210/240 - Performance Rating of Unitary Air-Conditioning and Air-Source Heat Pump Equipment.

B. AHRI 270 (SI/I-P) - Sound Performance Rating of Outdoor Unitary Equipment.

C. NFPA 90A - Standard for the Installation of Air-Conditioning and Ventilating Systems.

1.04 SUBMITTALS

A. See Section 013000 - Administrative Requirements for submittal procedures.

B. Product Data: Provide capacity and dimensions of manufactured products and assemblies required for this project. Indicate electrical service with electrical characteristics and connection requirements, and duct connections.

C. Shop Drawings: Indicate capacity and dimensions of manufactured products and assemblies required for this project. Indicate electrical service with electrical characteristics and connection requirements, and duct connections.

D. Manufacturer's Instructions: Indicate assembly, support details, connection requirements, and include start-up instructions.

E. Operation and Maintenance Data: Include manufacturer's descriptive literature, operating instructions, installation instructions, maintenance and repair data, and parts listing.

F. Warranty: Submit manufacturer's warranty and ensure forms have been filled out in Owner's name and registered with manufacturer.

G. Startup report.

1.05 QUALITY ASSURANCE

A. Products Requiring Electrical Connection: Listed and classified by Underwriters Laboratories Inc. as suitable for the purpose specified and indicated.

1.06 DELIVERY, STORAGE, AND HANDLING

A. Protect units from physical damage by storing off site until roof mounting curbs are in place, ready for immediate installation of units.

1.07 WARRANTY

A. See Section 017800 - Closeout Submittals for additional warranty requirements.

B. Provide a five year warranty to include coverage for refrigeration compressors.

C. Provide a twenty five year warranty to include coverage for heat exchanger.

PART 2 PRODUCTS

2.01 MANUFACTURERS

A. Daikin Applied: www.daikinapplied.com.

B. Aaon Inc: www.aaon.com.

C. Trane; http://www.trane.com

D. York International Corporation/Johnson Controls Inc: www.johnsoncontrols.com/#sle.

E. Substitutions: See Section 016000 - Product Requirements.

2.02 MANUFACTURED UNITS

A. Electrical Characteristics:
   1. See Section 260583.
   2. Disconnect Switch: Factory mount disconnect switch per factory standard.
   3. Convenience Outlet: Factory installed and pre-powered with a transformer upstream of the main power disconnect switch, 115 volt, 20 amp, GFCI type, externally mounted with weather protection cover. Mount GFCI outlet in a location on cabinet where doors, when opened, will not impact the outlet.

2.03 FABRICATION

A. Cabinet: G90 Galvanized steel with baked enamel finish, including access doors with multiple or piano hangers and 1/4 turn cam operated adjustable compression locking handles..
   Structural members shall be minimum 18 gage, with access doors or panels of minimum 20 gage.
   1. All air side of the cabinet and access doors shall be insulated double wall construction with minimum 24 gage galvanized steel interior liner.
   2. Insulated base panel. Double wall insulated base panel for exposed base application.
   3. Sloped roof for proper drainage of rain water.
   4. Condensate drain pan: insulated 304 stainless steel drain pan with slop to drain connection.
   5. All opening through the base pan of the unit shall have upturned flanges, minimum 1/2" in height.
   6. Hail guard for condenser coil, same finish as the unit cabinet.
   7. Factory installed weatherproof, outside air intake hood with bird screen.
   8. Furnish barometric dampers at relief air opening to prevent back-draft.
   9. Unit shall have decals and tags to indicate unit lifting and rigging, service areas and cautions areas.
   10. All mounting screws, nuts and bolts shall be stainless steel.
   11. Any part mounted on an external panel that is adjacent to a swinging access door shall be protected from potentially damaging the cabinet finishes when swinging open the access door.
   12. Any part mounted on an access door with a panel adjacent to the opening direction shall be protected from potentially damaging the cabinet finishes when swinging open the access door.
   13. Unit cabinet shall be designed to operate at total static pressures up to 5.0 inches w.g.
   14. Control and power wiring diagram shall be laminated and mounted on the inside the control access door.

B. Insulation: Edges are protected from erosion.
   1. Minimum R-value of 7 or higher for 15 tons or smaller unit.
   2. Minimum R-value of 13 for 16 tons or larger.

C. Supply and Return or Exhaust Fan as Applicable:

1. Fan: Single width, single inlet (SWSI) airfoil centrifugal fans with rubber isolation mounts. Direct drive fan mounted to the motor shaft.
2. Fan: Backward curved plenum supply fans with rubber isolation mounts. Direct drive fan mounted to the motor shaft.
3. Fan Wheel: Class II construction with aluminum fan blades that are continuously welded to the hub plate and end rim.
4. Slide out fan assembly for servicing and maintenance.
5. All fan assemblies shall be statically and dynamically balanced at the factory, including a final trim balance, prior to shipment.
6. Fan motor:
    a. Totally enclosed EC motor that is 15% - 100% speed controlled by the rooftop unit controller, premium efficiency.
    b. Motor with VFD drive, premium efficiency. (acceptable for 16 tons or larger unit)
    c. Build-in thermal overload protection.
    d. Build-in phase failure protection.
7. The supply fan shall be capable of airflow modulation from 30% to 100% of the scheduled designed airflow. The fan shall not operate in a state of surge at any point within the modulation range.
8. Fan performance as indicated in schedule on drawing.

D. Air Filters:
1. The filter rack to accept a 2" prefilter and a 4" final filter.
2. Hinged access door for the filter section.
3. The manufacturer shall ship the rooftop unit with 2" MERV 8 filters.

E. Roof Mounting Curb: minmum 20 inches high galvanized steel, channel frame with gaskets, nailer strips.

2.04 NATURAL GAS HEATING

A. The gas heating section shall be installed downstream of the supply air fan.

B. Gas Burner: Atmospheric type burner with adjustable combustion air supply, gas valve, manual shu-off valve, intermittent spark or glow coil ignition, flame sensing device, and automatic 100 percent shut-off pilot.

C. Gas Burner Safety Controls: Energize ignition, limit time for establishment of flame, prevent opening of gas valve until pilot flame is proven, stop gas flow on ignition failure, energize blower motor, and after airflow proven and slight delay, allow gas valve to open.

D. High Limit Control: Temperature sensor with fixed stop at maximum permissible setting, de-energize burner on excessive bonnet temperature and energize burner when temperature drops to lower safe value.

E. Heat Exchanger: Stainless steel.

F. Capacity Control: Stages or modulation control as indicated in schedule on drawing.
1. Modulating gas valve, adjustable speed combustion blower.

G. Unit ETL certification shall cover the complete unit including the gas heating control modules.

H. Supply Fan Control: Temperature sensor sensing bonnet temperatures and independent of burner controls, with provisions for continuous fan operation.

2.05 ECONOMIZER

A. The economizer operation shall be fully integral to the mechanical cooling and allow up to 100% of mechanical cooling if needed to maintain the cooling discharge air temperature.

B. Moisture eliminator filters to drain water away from the entering air stream at outside air intake hood.

C. The outside and return and exhaust air dampers:

1. Sized for 100% of the supply air volume
2. Parallel blade design.
3. Gasketed with side seals to provide an air leakage rate of 4 cfm / square foot of damper area at 1" differential pressure per ASHRAE 90.1 Energy Standard.

D. A barometric exhaust damper shall be provided to exhaust air out of the unit.

E. A bird screen shall be provided to prevent infiltration of rain and foreign materials.

F. Damper Operator: Gear train sealed in oil, 0-100% full damper modulation, spring return.

2.06 AIRFLOW MEASUREMENT

A. Flow Meter:
1. Provide airflow measurement system to directly measure fan airflow or measure differential pressure that can be used to calculate airflow without interfering with submitted airflow performance and noise levels.
2. Accuracy: Plus/minus 5 percent (device and transmitter) when operating within the stable operating region of the fan curve.

B. Air Flow Measurement Station:
1. Provide factory installed, airflow measurement station tested in accordance with AMCA 611 and bearing the AMCA Ratings Seal for Airflow Measurement Performance.
2. Station Location: Install in outdoor opening to measure airflow.
3. Measurement Range: Minimum of 7.5 percent to 100 percent of unit nominal flow.
4. Operation: Provide low voltage signal corresponding to actual airflow for controlling and documenting airflow.
5. Accuracy: Plus/minus 5 percent.

2.07 CONTROLS

A. Coordination with Automatic Controls Equipment Systems (ACES) inc.: The coordination must occur prior to submission of the bid.
1. Contact: Justin Vogt at (314) 722-2727
2. The coordination must occur prior to submission of the bid.
3. Refer to Section 230993 for operating sequences for each unit.

B. Custom Controller:
1. The operation control panel and necessary control devices may be provided by ACES and installed at factory, or provided by ACES and installed at field.
    a. The operation control panel and necessary control devices may be provided by ACES and installed at factory
        1) ACES shall ship the control panel and necessary control devices with detail installation instruction to the manufacturer.
        2) Manufacturer shall install all parts provided by ACES per installation instruction.
            (a) The control panel and devises shall be installed for easy field service.
            (b) The control panel shall be installed inside the control compartment.
    b. The operation control panel and necessary control devices are provided by ACES and installed at field.
        1) Manufacturer shall provide adequate space inside the control compartment for field installation of ACES's controller.
        2) Manufacturer shall provide control terminate strip with necessary control point terminations.
    c. Operating Sequence and Control Point List: Refer to Section 230993
2. The manufacturer shall furnish all necessary safety controls.

PART 3 EXECUTION

3.01 EXAMINATION AND COORDINATION

A. Verify that roof is ready to receive work and opening dimensions are as indicated on shop drawings.

B. Verify that proper power supply is available.

C. Ensure roof openings are temporarily covered to protect rain water gets into the building after they are cut and remain covered till it is the time to set the rooftop unit in place.

D. Inspect roof curb and rooftop unit are damage free and ready for installation.

E. Verify the curb dimension and roof opening dimension to ensure they fit the rooftop unit. Notify Owner the discrepancy prior to installing the rooftop unit

F. Notify Owner the date to install the unit minimum 2 business days in advance.

3.02 INSTALLATION

A. Install in accordance with manufacturer's instructions.

B. Install in accordance with NFPA 90A.

C. Mount units on factory built roof mounting curb providing watertight enclosure to protect ductwork and utility services. Install roof mounting curb level.

D. Roof Curb installation for curbs provided by unit manufacturers:
   1. Install roof curb level.
   2. Provide insulation for the curb if the curb is without internal liner.
   3. Coordinate curb installation and flashing with Section 07620.
   4. Install units on roof curb providing watertight enclosure to protect ductwork and utility services.
   5. Install gasket material between unit base and roof curb.

E. Install units on vibration isolators. Refer to Section 230548.

F. Connect units to supply and return ductwork with flexible connections per drawing.

G. Install condensate piping with trap and route from drain pan to nearest roof drain.

H. Install components furnished loose for field mounting.

I. Install electrical devices furnished loose for field mounting.

3.03 SYSTEM STARTUP

A. Prepare and start equipment. Adjust for proper operation.

B. Startup according to procedures provided by manufacturer.

3.04 CLOSEOUT ACTIVITIES

A. Demonstrate operation to Owner's maintenance personnel.

B. Coordinate with Owner for training schedule.

END OF SECTION 237413

SECTION 238126.13
SMALL-CAPACITY SPLIT-SYSTEM AIR CONDITIONERS

PART 1 GENERAL

1.01 SECTION INCLUDES

A. Air cooled condensing units.

B. Indoor air handling (fan and coil) units for ductless systems.

C. Controls.

1.02 REFERENCE STANDARDS

A. AHRI 210/240 - Performance Rating of Unitary Air-Conditioning and Air-Source Heat Pump Equipment.

B. AHRI 270 (SI/I-P) - Sound Performance Rating of Outdoor Unitary Equipment.

C. AHRI 520 - Performance Rating of Positive Displacement Condensing Units.

D. ASHRAE Std 15 - Safety Standard for Refrigeration Systems.

E. ASHRAE Std 23 - Methods for Performance Testing Positive Displacement Refrigerant Compressors and Compressor Units.

F. NFPA 90A - Standard for the Installation of Air-Conditioning and Ventilating Systems.

G. NFPA 90B - Standard for the Installation of Warm Air Heating and Air-Conditioning Systems.

H. UL 207 - Standard for Refrigerant-Containing Components and Accessories, Nonelectrical.

1.03 SUBMITTALS

A. See Section 013000 - Administrative Requirements, for submittal procedures.

B. Product Data: Provide rated capacities, weights, accessories, electrical nameplate data, and wiring diagrams.

C. Shop Drawings: Indicate assembly, required clearances, and location and size of field connections.

D. Design Data: Indicate refrigerant pipe sizing.

E. Manufacturer's Instructions: Indicate rigging, assembly, and installation instructions.

F. Operation and Maintenance Data: Include manufacturer's descriptive literature, operating instructions, installation instructions, maintenance and repair data, and parts listing.

G. Warranty: Submit manufacturers warranty and ensure forms have been filled out in Owner's name and registered with manufacturer.

1.04 WARRANTY

A. See Section 017800 - Closeout Submittals, for additional warranty requirements.

B. Provide five year manufacturers warranty for compressor of air cooled condensing unit.

PART 2 PRODUCTS

2.01 MANUFACTURERS

A. Mitsubishi; www.mitsubishielectric.com; www.mehvac.com;www.mitsubishielectric.com; http://vrf.mitsubishipro.com
   1. Indoor Wall Unit Application
      a. Air Conditioning Unit: MSY indoor unit / MUY outdoor unit
      b. Heat Pump Unit: MSZ indoor unit / MUZ outdoor unit
   2. Indoor Ceiling Recess Application
      a. Heat Pump Unit: SLZ indoor unit / SUZ outdoor unit
   3. Horizontal-Ducted Application
      a. Heat Pump Unit: SEZ indoor unit / SUZ outdoor unit

4. MDF Closet Application (Low ambient 0 F degree cooliing application)
    a. Indoor Wall Unit Application: PKA Indoor Unit / PUY Out Door Unit
    b. Indoor Ceiling Recess Application: PLA Indoor Unit / PUY Out Door Unit
    c. Indoor Horizontal Ducted Application: PEA/PEAD Indoor Unit / PUY Out Door Unit
    d. Indoor Ceiling Surface Application: PCA Indoor Unit / PUY Out Door Unit

B. Friedrich; www.friedrich.com

C. Substitutions: Not permitted.

2.02 SYSTEM DESIGN

A. Split-System Heating and Cooling Units: Self-contained, packaged, matched factory-engineered and assembled, pre-wired indoor and outdoor units; UL listed.
1. Heating and Cooling: Air-source electric heat pump located in outdoor unit with evaporator; auxiliary electric heat.
2. Provide refrigerant lines internal to units and between indoor and outdoor units, factory cleaned, dried, pressurized and sealed, with insulated suction line.

B. Performance Requirements: See Drawings for additional requirements.

2.03 INDOOR AIR HANDLING UNITS FOR DUCTLESS SYSTEMS

A. Indoor Units: Self-contained, packaged, factory assembled, pre-wired unit consisting of cabinet, supply fan, evaporator coil, and controls; wired for single power connection with control transformer.
1. Cabinet: Galvanized steel.
    a. Finish: White.
2. Fan: Line-flow fan direct driven by a single motor.
3. Filter return air with washable, antioxidant pre-filter and a pleated anti-allergy enzyme filter.

B. Evaporator Coils: Copper tube aluminum fin assembly, galvanized or polymer drain pan sloped in all directions to drain, drain connection, refrigerant piping connections, restricted distributor or thermostatic expansion valve.
1. Construction and Ratings: In accordance with AHRI 210/240 and UL 207.
2. Manufacturer: System manufacturer.

2.04 OUTDOOR UNITS

A. Outdoor Units: Self-contained, packaged, pre-wired unit consisting of cabinet, with compressor and condenser.
1. Comply with AHRI 210/240.
2. Refrigerant: R-410A.
3. Cabinet: Galvanized steel with baked enamel finish, easily removed and secured access doors with safety interlock switches, glass fiber insulation with reflective liner.
4. Construction and Ratings: In accordance with AHRI 210/240 with testing in accordance with ASHRAE Std 23 and UL 207.
5. Sound Rating: 69 dBA, when measured in accordance with AHRI 270 (SI/I-P).

B. Air Cooled Condenser: Aluminum fin and copper tube coil, AHRI 520 with direct drive axial propeller fan resiliently mounted, galvanized fan guard.
1. Condenser Fans: Direct-drive propeller type.
2. Condenser Fan Motor: Enclosed, 1-phase type, permanently lubricated.

C. Coil: Air-cooled, aluminum fins bonded to copper tubes.

D. Accessories: Filter drier, high-pressure switch (manual reset), low pressure switch (automatic reset), service valves and gauge ports, thermometer well (in liquid line).
1. Provide thermostatic expansion valves.

E. Operating Controls:
1. Control by room thermostat to maintain room temperature setting.

2. Low Ambient Kit: Provide refrigerant pressure switch to cycle condenser fan on when condenser refrigerant pressure is above 285 psig and off when pressure drops below 140 psig for operation to 0 degrees F.

2.05 ACCESSORY EQUIPMENT

A. Room Thermostat: Wall-mounted, electric solid state microcomputer based room thermostat with remote sensor to maintain temperature setting; low-voltage; with following features:
   1. System selector switch (heat-off-cool) and fan control switch (auto-on).
   2. Automatic switching from heating to cooling.
   3. Preferential rate control to minimize overshoot and deviation from setpoint.
   4. Set-up for four separate temperatures per day.
   5. Instant override of setpoint for continuous or timed period from one hour to 31 days.
   6. Short cycle protection.
   7. Programming based on weekdays, Saturday and Sunday.
   8. Selection features including degree F or degree C display, 12 or 24 hour clock, keyboard disable, remote sensor, fan on-auto.
   9. Battery replacement without program loss.
   10. Thermostat Display:
      a. Time of day.
      b. Actual room temperature.
      c. Programmed temperature.
      d. System Mode Indication: Heating, Cooling, Fan Auto, Off, and On, Auto or On, Off.

PART 3 EXECUTION

3.01 EXAMINATION

A. Verify that substrates are ready for installation of units and openings are as indicated on shop drawings.

B. Verify that proper power supply is available and in correct location.

3.02 INSTALLATION

A. Install in accordance with manufacturer's instructions and requirements of local authorities having jurisdiction.

B. Install in accordance with NFPA 90A and NFPA 90B.

END OF SECTION 238126.13

SECTION 260505
SELECTIVE DEMOLITION FOR ELECTRICAL

PART 1 GENERAL

1.01 SECTION INCLUDES

A. Electrical demolition.

1.02 RELATED REQUIREMENTS

A. Section 017000 - Execution and Closeout Requirements: Additional requirements for alterations work.

1.03 SUBMITTALS

A. No submittals required.

PART 2 PRODUCTS

2.01 MATERIALS AND EQUIPMENT

A. Materials and equipment for patching and extending work: As specified in individual sections.

PART 3 EXECUTION

3.01 EXAMINATION

A. Verify field measurements and circuiting arrangements are as indicated.

B. Verify that abandoned wiring and equipment serve only abandoned facilities.

C. Demolition drawings are based on field observation and existing record documents.

D. Report discrepancies to Owner before disturbing existing installation.

E. Beginning of demolition means installer accepts existing conditions.

3.02 PREPARATION

A. Verify field loads on circuits identified for demolition.

B. Disconnect electrical systems in walls, floors, and ceilings to be removed.

C. Coordinate utility service outages with utility company.

D. Provide temporary wiring and connections to maintain existing systems in service during construction.

E. When electrical demolition work must be performed on energized equipment or circuits, use personnel experienced in such operations.

F. Existing Electrical Service: Maintain existing system in service until new system is complete and ready for service. Disable system only to make switchovers and connections. Minimize outage duration.
   1. Obtain permission from Owner at least 48 hours before partially or completely disabling system.
   2. Make temporary connections to maintain service in areas adjacent to work area.

G. Existing Fire Alarm System: Maintain existing system in service until new system is accepted. Disable system only to make switchovers and connections. Minimize outage duration.
   1. Notify Owner before partially or completely disabling system.
   2. Make notifications at least 48 hours in advance.
   3. Make temporary connections to maintain service in areas adjacent to work area.

H. Existing Telephone, Data Network, Public Address, Video Surveillance, and Security Systems: Maintain existing system in service until new system is complete and ready for service. Disable system only to make switchovers and connections. Minimize outage duration.
   1. Notify Owner at least 48 hours before partially or completely disabling system.
   2. Make temporary connections to maintain service in areas adjacent to work area.

3.03 DEMOLITION AND EXTENSION OF EXISTING ELECTRICAL WORK

A. Remove, relocate, and extend existing installations to accommodate new construction.

B. Remove abandoned wiring to source of supply.

C. Remove exposed abandoned conduit, including abandoned conduit above accessible ceiling finishes. Cut conduit flush with walls and floors, and patch surfaces.

D. Disconnect abandoned outlets and remove devices. Remove abandoned outlets if conduit servicing them is abandoned and removed. Provide blank cover for abandoned outlets that are not removed.

E. Disconnect and remove abandoned panelboards and distribution equipment.

F. Disconnect and remove electrical devices and equipment serving utilization equipment that has been removed.

G. Disconnect and remove abandoned luminaires. Remove brackets, stems, hangers, and other accessories.

H. Repair adjacent construction and finishes damaged during demolition and extension work.

I. Maintain access to existing electrical installations that remain active. Modify installation or provide access panel as appropriate.

J. Extend existing installations using materials and methods compatible with existing electrical installations, or as specified.

K. Protect salvaged item, as indicated on drawings, against damage during removal, transportation, and reinstallation.

L. Coordinate with Owner for storage location of salvaged items.

M. Return salvaged items of historic value to Owner (markers, plaques, cornerstones, monuments).

3.04 CLEANING AND REPAIR

A. See Section 017419 - Construction Waste Management and Disposal for additional requirements.

B. Clean existing materials and equipment that remain or that are to be reused.

C. Obtain Owner's guidance before proceeding on any non-scope related repairs needed to existing materials and equipment that remain or that are to be reused.

D. Panelboards: Clean exposed surfaces and check tightness of electrical connections. Replace damaged circuit breakers and provide closure plates for vacant positions.

E. Panelboards: Provide new, typed circuit directory showing revised circuiting arrangement for all panelboards affected by work.

F. Panelboards: Remove abandon cabling inside panelboards.

G. Luminaires: Remove existing luminaires for cleaning. Use mild detergent to clean all exterior and interior surfaces; rinse with clean water and wipe dry. Replace lamps, ballasts and broken electrical parts.

END OF SECTION 260505

SECTION 260519
LOW-VOLTAGE ELECTRICAL POWER CONDUCTORS AND CABLES

PART 1 GENERAL

1.01 SECTION INCLUDES

A. Single conductor building wire.

B. Metal-clad cable.

C. Wiring connectors.

D. Electrical tape.

E. Heat shrink tubing.

F. Oxide inhibiting compound.

G. Wire pulling lubricant.

H. Cable ties.

I. 120V power connections to fire alarm components.

1.02 RELATED REQUIREMENTS

A. Section 078400 - Firestopping.

B. Section 260505 - Selective Demolition for Electrical: Disconnection, removal, and/or extension of existing electrical conductors and cables.

C. Section 260526 - Grounding and Bonding for Electrical Systems: Additional requirements for grounding conductors and grounding connectors.

D. Section 260553 - Identification for Electrical Systems: Identification products and requirements.

E. Section 284600 - Fire Detection and Alarm: Fire alarm system conductors and cables.

1.03 REFERENCE STANDARDS

A. ASTM B3 - Standard Specification for Soft or Annealed Copper Wire.

B. ASTM B8 - Standard Specification for Concentric-Lay-Stranded Copper Conductors, Hard, Medium-Hard, or Soft.

C. ASTM B33 - Standard Specification for Tin-Coated Soft or Annealed Copper Wire for Electrical Purposes.

D. ASTM B787/B787M - Standard Specification for 19 Wire Combination Unilay-Stranded Copper Conductors for Subsequent Insulation.

E. ASTM D3005 - Standard Specification for Low-Temperature Resistant Vinyl Chloride Plastic Pressure-Sensitive Electrical Insulating Tape.

F. ASTM D4388 - Standard Specification for Nonmetallic Semi-Conducting and Electrically Insulating Rubber Tapes.

G. NECA 1 - Standard for Good Workmanship in Electrical Construction.

H. NECA 120 - Standard for Installing Armored Cable (AC) and Type Metal-Clad (MC) Cable.

I. NEMA WC 70 - Power Cables Rated 2000 Volts or Less for the Distribution of Electrical Energy.

J. NETA ATS - Standard for Acceptance Testing Specifications for Electrical Power Equipment And Systems.

K. NFPA 70 - National Electrical Code.

L. UL 44 - Thermoset-Insulated Wires and Cables.

M. UL 83 - Thermoplastic-Insulated Wires and Cables.

N. UL 267 - Outline of Investigation for Wire-Pulling Compounds.

O. UL 486A-486B - Wire Connectors.

P. UL 486C - Splicing Wire Connectors.

Q. UL 486D - Sealed Wire Connector Systems.

R. UL 493 - Thermoplastic-Insulated Underground Feeder and Branch-Circuit Cables.

S. UL 510 - Polyvinyl Chloride, Polyethylene, and Rubber Insulating Tape.

T. UL 1569 - Metal-Clad Cables.

1.04 ADMINISTRATIVE REQUIREMENTS

A. Coordination:

1. Coordinate sizes of raceways, boxes, and equipment enclosures installed under other sections with the actual conductors to be installed, including adjustments for conductor sizes increased for voltage drop.
2. Coordinate with electrical equipment installed under other sections to provide terminations suitable for use with the conductors to be installed.
3. Notify Architect of any conflicts with or deviations from Contract Documents. Obtain direction before proceeding with work.

1.05 SUBMITTALS

A. No submittals required.

1.06 QUALITY ASSURANCE

A. Comply with requirements of NFPA 70.

B. Product Listing Organization Qualifications: An organization recognized by OSHA as a Nationally Recognized Testing Laboratory (NRTL) and acceptable to authorities having jurisdiction.

1.07 DELIVERY, STORAGE, AND HANDLING

A. Receive, inspect, handle, and store conductors and cables in accordance with manufacturer's instructions.

1.08 FIELD CONDITIONS

A. Do not install or otherwise handle thermoplastic-insulated conductors at temperatures lower than 14 degrees F, unless otherwise permitted by manufacturer's instructions. When installation below this temperature is unavoidable, notify Architect and obtain direction before proceeding with work.

PART 2 PRODUCTS

2.01 CONDUCTOR AND CABLE APPLICATIONS

A. Do not use conductors and cables for applications other than as permitted by NFPA 70 and product listing.

B. Provide single conductor building wire installed in suitable raceway unless otherwise indicated.

C. Nonmetallic-sheathed cable is not permitted.

D. Service entrance cable is not permitted.

E. Armored cable is not permitted.

F. Metal-clad cable is permitted only as follows:

1. At indoor, dry locations.
2. Where not exposed to damage or corrosive atmospheres.
3. Where not exposed to view.
4. Where concealed above accessible ceilings for connections to luminaires.

5. Where concealed in hollow stud walls and above accessible ceilings for branch circuits up to 20 A.
6. Provide single conductor building wire in raceway for circuit homerun to panelboards.

2.02 CONDUCTOR AND CABLE GENERAL REQUIREMENTS

A. Provide products that comply with requirements of NFPA 70.

B. Provide products listed, classified, and labeled as suitable for the purpose intended.

C. Provide new conductors and cables manufactured not more than one year prior to installation.

D. Unless specifically indicated to be excluded, provide all required conduit, boxes, wiring, connectors, etc. as required for a complete operating system.

E. Comply with NEMA WC 70.

F. Thermoplastic-Insulated Conductors and Cables: Listed and labeled as complying with UL 83.

G. Thermoset-Insulated Conductors and Cables: Listed and labeled as complying with UL 44.

H. Conductors for Grounding and Bonding: Also comply with Section 260526.

I. Conductors and Cables Installed in Cable Tray: Listed and labeled as suitable for cable tray use.

J. Conductors and Cables Installed Where Exposed to Direct Rays of Sun: Listed and labeled as sunlight resistant.

K. Conductors and Cables Installed Exposed in Spaces Used for Environmental Air (only where specifically permitted): Plenum rated, listed and labeled as suitable for use in return air plenums.

L. Conductor Material:
1. Provide copper conductors only. Aluminum conductors are not acceptable for this project. Conductor sizes indicated are based on copper.
2. Copper Conductors: Soft drawn annealed, 98 percent conductivity, uncoated copper conductors complying with ASTM B3, ASTM B8, or ASTM B787/B787M unless otherwise indicated.
3. Tinned Copper Conductors: Comply with ASTM B33.

M. Minimum Conductor Size:
1. Branch Circuits: 12 AWG.
   a. Exceptions:
      1) 20 A, 120 V circuits longer than 75 feet: 10 AWG, for voltage drop.
      2) 20 A, 120 V circuits longer than 150 feet: 8 AWG, for voltage drop.
      3) 20 A, 277 V circuits longer than 150 feet: 10 AWG, for voltage drop.
2. Control Circuits: 16 AWG.

N. Conductor Color Coding:
1. Color code conductors as indicated unless otherwise required by the authority having jurisdiction. Maintain consistent color coding throughout project.
2. Color Coding Method: Integrally colored insulation.
   a. Conductors size 6 AWG and larger may have black insulation color coded using vinyl color coding electrical tape.
3. Color Code (Power and Lighting):
   a. 480Y/277 V, 3 Phase, 4 Wire System:
      1) Phase A: Brown.
      2) Phase B: Orange.
      3) Phase C: Yellow.
      4) Neutral/Grounded: Gray.
   b. 208Y/120 V, 3 Phase, 4 Wire System:

1) Phase A: Black.
2) Phase B: Red.
3) Phase C: Blue.
4) Neutral/Grounded: White.

c. Equipment Ground, All Systems: Green.
d. Travelers for 3-Way and 4-Way Switching: Purple or purple electrical tape wrapped around jacket of conductor utilized.
e. For modifications or additions to existing wiring systems, comply with existing color code when existing code complies with NFPA 70 and is approved by the authority having jurisdiction.
f. For control circuits, comply with manufacturer's recommended color code.

4. Color Code (Systems): The following colors apply to overall outside jacket when conductors are not in color marked conduit. All system wiring not in conduit must be plenum rated.
a. Fire Alarm System: Red.
b. Telephone System: White.
c. HVAC Control System: Green.
d. PA System: Grey.
e. Cat5e Data System: Blue.
f. Cat6 Data System: Violet.
g. Security System: White.
h. CCTV System: Yellow

2.03 SINGLE CONDUCTOR BUILDING WIRE

A. Manufacturers:
1. Copper Building Wire:
a. Cerro Wire LLC: www.cerrowire.com/#sle.
b. Encore Wire Corporation: www.encorewire.com/#sle.
c. Southwire Company: www.southwire.com/#sle.
d. Houston Wire and Cable Company: www.houwire.com
e. General Cable Technologies Corporation: www.generalcable.com
f. Coleman Cable, Inc: www.colemancable.com
g. Substitutions: See Section 016000 - Product Requirements.

B. Description: Single conductor insulated wire.

C. Conductor Stranding:
1. Feeders and Branch Circuits:
a. Size 10 AWG and Smaller: Solid.
b. Size 8 AWG and Larger: Stranded.
2. Control Circuits: Stranded.

D. Insulation Voltage Rating: 600 V.

E. Insulation:
1. Copper Building Wire: Type THHN/THWN, THHN/THWN-2, or XHHW-2.
2. Any Copper Wire Installed Underground: Type XHHW-2.

2.04 METAL-CLAD CABLE

A. Manufacturers:
1. Cerro Wire LLC[<>]: www.cerrowire.com.
2. AFC Cable Systems Inc: www.afcweb.com/#sle.
3. Encore Wire Corporation: www.encorewire.com/#sle.
4. Southwire Company: www.southwire.com/#sle.
5. Coleman Cable, Inc: www.colemancable.com

6. Substitutions: See Section 016000 - Product Requirements.

B. Description: NFPA 70, Type MC cable listed and labeled as complying with UL 1569, and listed for use in classified firestop systems to be used.

C. Conductor Stranding:
   1. Size 10 AWG and Smaller: Solid.
   2. Size 8 AWG and Larger: Stranded.

D. Insulation Voltage Rating: 600 V.

E. Insulation: Type THHN, THHN/THWN, or THHN/THWN-2.

F. Provide dedicated neutral conductor for each single circuit (120/277V) when utilizing multi-conductor MC cable.

G. Grounding: Full-size integral equipment grounding conductor.

H. Armor: Aluminum or steel interlocked tape.

2.05 WIRING CONNECTORS

A. Description: Wiring connectors appropriate for the application, suitable for use with the conductors to be connected, and listed as complying with UL 486A-486B or UL 486C as applicable.

B. Connectors for Grounding and Bonding: Comply with Section 260526.

C. Wiring Connectors for Splices and Taps:
   1. Copper Conductors Size 8 AWG and Smaller: Use twist-on insulated spring connectors.
   2. Copper Conductors Size 6 AWG and Larger: Use mechanical connectors or compression connectors.

D. Wiring Connectors for Terminations:
   1. Provide terminal lugs for connecting conductors to equipment furnished with terminations designed for terminal lugs.
   2. Provide compression adapters for connecting conductors to equipment furnished with mechanical lugs when only compression connectors are specified.
   3. Where over-sized conductors are larger than the equipment terminations can accommodate, provide connectors suitable for reducing to appropriate size, but not less than required for the rating of the overcurrent protective device.
   4. Provide motor pigtail connectors for connecting motor leads in order to facilitate disconnection.
   5. Copper Conductors Size 8 AWG and Larger: Use mechanical connectors or compression connectors where connectors are required.
   6. Stranded Conductors Size 10 AWG and Smaller: Use crimped terminals for connections to terminal screws.
   7. Conductors for Control Circuits: Use crimped terminals for all connections.

E. Do not use insulation-piercing or insulation-displacement connectors designed for use with conductors without stripping insulation.

F. Do not use push-in wire connectors.

G. Twist-on Insulated Spring Connectors: Rated 600 V, 221 degrees F for standard applications and 302 degrees F for high temperature applications; pre-filled with sealant and listed as complying with UL 486D for damp and wet locations.
   1. Manufacturers:
      a. 3M: www.3m.com/#sle.
      b. Ideal Industries, Inc: www.idealindustries.com/#sle.
      c. NSI Industries LLC: www.nsiindustries.com/#sle.
      d. Substitutions: See Section 016000 - Product Requirements.

H. Mechanical Connectors: Provide bolted type or set-screw type.
   1. Manufacturers:
      a. Burndy LLC: www.burndy.com/#sle.
      b. Ilsco: www.ilsco.com/#sle.
      c. Thomas & Betts Corporation: www.tnb.com/#sle.
      d. Substitutions: See Section 016000 - Product Requirements.

I. Compression Connectors: Provide circumferential type or hex type crimp configuration.
   1. Manufacturers:
      a. Burndy LLC: www.burndy.com/#sle.
      b. Ilsco: www.ilsco.com/#sle.
      c. Thomas & Betts Corporation: www.tnb.com/#sle.
      d. Substitutions: See Section 016000 - Product Requirements.

J. Crimped Terminals: Nylon-insulated, with insulation grip and terminal configuration suitable for connection to be made.
   1. Manufacturers:
      a. Burndy LLC: www.burndy.com/#sle.
      b. Ilsco: www.ilsco.com/#sle.
      c. Thomas & Betts Corporation: www.tnb.com/#sle.
      d. 3M: www.3m.com.
      e. Substitutions: See Section 016000 - Product Requirements.

2.06 ACCESSORIES

A. Electrical Tape:
   1. Manufacturers:
      a. 3M: www.3m.com/#sle.
      b. Plymouth Rubber Europa: www.plymouthrubber.com/#sle.
      c. Substitutions: See Section 016000 - Product Requirements.
   2. Vinyl Color Coding Electrical Tape: Integrally colored to match color code indicated; listed as complying with UL 510; minimum thickness of 7 mil; resistant to abrasion, corrosion, and sunlight; suitable for continuous temperature environment up to 221 degrees F.
   3. Vinyl Insulating Electrical Tape: Complying with ASTM D3005 and listed as complying with UL 510; minimum thickness of 7 mil; resistant to abrasion, corrosion, and sunlight; conformable for application down to 0 degrees F and suitable for continuous temperature environment up to 221 degrees F.
   4. Rubber Splicing Electrical Tape: Ethylene Propylene Rubber (EPR) tape, complying with ASTM D4388; minimum thickness of 30 mil; suitable for continuous temperature environment up to 194 degrees F and short-term 266 degrees F overload service.
   5. Electrical Filler Tape: Rubber-based insulating moldable putty, minimum thickness of 125 mil; suitable for continuous temperature environment up to 176 degrees F.
   6. Moisture Sealing Electrical Tape: Insulating mastic compound laminated to flexible, all-weather vinyl backing; minimum thickness of 90 mil.

B. Wire Pulling Lubricant:
   1. Manufacturers:
      a. 3M: www.3m.com/#sle.
      b. American Polywater Corporation: www.polywater.com/#sle.
      c. Ideal Industries, Inc: www.idealindustries.com/#sle.
      d. Substitutions: See Section 016000 - Product Requirements.
   2. Listed and labeled as complying with UL 267.
   3. Suitable for use with conductors/cables and associated insulation/jackets to be installed.
   4. Suitable for use at installation temperature.

C. Cable Ties: Material and tensile strength rating suitable for application.

PART 3 EXECUTION

3.01 EXAMINATION

A. Verify that interior of building has been protected from weather.

B. Verify that work likely to damage wire and cable has been completed.

C. Verify that raceways, boxes, and equipment enclosures are installed and are properly sized to accommodate conductors and cables in accordance with NFPA 70.

D. Verify that field measurements are as indicated.

E. Verify that conditions are satisfactory for installation prior to starting work.

3.02 PREPARATION

A. Clean raceways thoroughly to remove foreign materials before installing conductors and cables.

3.03 INSTALLATION

A. Circuiting Requirements:
   1. Arrange circuiting to minimize splices.
   2. Maintain separation of Class 1, Class 2, and Class 3 remote-control, signaling, and power-limited circuits in accordance with NFPA 70.
   3. Maintain separation of wiring for emergency systems in accordance with NFPA 70.
   4. Common Neutrals: Sharing of neutral/grounded conductors among single phase branch circuits of different phases installed in the same raceway is not permitted. Provide dedicated neutral/grounded conductor for each individual branch circuit.
   5. Provide oversized neutral/grounded conductors where indicated and as specified below.
      a. Provide 200 percent rated neutral for feeders fed from K-rated transformers.
      b. Provide 200 percent rated neutral for feeders serving panelboards with 200 percent rated neutral bus.

B. Install products in accordance with manufacturer's instructions.

C. Perform work in accordance with NECA 1 (general workmanship).

D. Install metal-clad cable (Type MC) in accordance with NECA 120.

E. Installation in Raceway:
   1. Tape ends of conductors and cables to prevent infiltration of moisture and other contaminants.
   2. Pull all conductors and cables together into raceway at same time.
   3. Do not damage conductors and cables or exceed manufacturer's recommended maximum pulling tension and sidewall pressure.
   4. Use suitable wire pulling lubricant where necessary, except when lubricant is not recommended by the manufacturer.

F. Paralleled Conductors: Install conductors of the same length and terminate in the same manner.

G. Secure and support conductors and cables in accordance with NFPA 70 using suitable supports and methods approved by the authority having jurisdiction. Provide independent support from building structure. Do not provide support from raceways, piping, ductwork, or other systems.

H. Terminate cables using suitable fittings.
   1. Metal-Clad Cable (Type MC):
      a. Use listed fittings.
      b. Cut cable armor only using specialized tools to prevent damaging conductors or insulation. Do not use hacksaw or wire cutters to cut armor.
      c. Do not use direct-bearing set-screw type fittings for cables with aluminum armor.

I. Install conductors with a minimum of 12 inches of slack at each outlet.

J. Neatly train and bundle conductors inside boxes, wireways, panelboards and other equipment enclosures.

K. Group or otherwise identify neutral/grounded conductors with associated ungrounded conductors inside enclosures in accordance with NFPA 70.

L. Make wiring connections using specified wiring connectors.
   1. Make splices and taps only in accessible boxes. Do not pull splices into raceways or make splices in conduit bodies or wiring gutters.
   2. Remove appropriate amount of conductor insulation for making connections without cutting, nicking or damaging conductors.
   3. Do not remove conductor strands to facilitate insertion into connector.
   4. Clean contact surfaces on conductors and connectors to suitable remove corrosion, oxides, and other contaminates. Do not use wire brush on plated connector surfaces.
   5. Mechanical Connectors: Secure connections according to manufacturer's recommended torque settings.
   6. Compression Connectors: Secure connections using manufacturer's recommended tools and dies.

M. Insulate splices and taps that are made with uninsulated connectors using methods suitable for the application, with insulation and mechanical strength at least equivalent to unspliced conductors.

N. Insulate ends of spare conductors using vinyl insulating electrical tape.

O. Field-Applied Color Coding: Where vinyl color coding electrical tape is used in lieu of integrally colored insulation as permitted in Part 2 under "Color Coding", apply half overlapping turns of tape at each termination and at each location conductors are accessible.

P. Identify conductors and cables in accordance with Section 260553.

Q. Install firestopping to preserve fire resistance rating of partitions and other elements, using materials and methods specified in Section 078400.

R. Unless specifically indicated to be excluded, provide final connections to all equipment and devices, including those furnished by others, as required for a complete operating system.

3.04 FIELD QUALITY CONTROL

A. See Section 014000 - Quality Requirements, for additional requirements.

B. Perform continuity test on all branch circuit conductors.

C. Verify proper phasing of connections and correct, if necessary.

D. Correct deficiencies and replace damaged or defective conductors and cables.

END OF SECTION 260519

SECTION 260526
GROUNDING AND BONDING FOR ELECTRICAL SYSTEMS

PART 1 GENERAL

1.01 SECTION INCLUDES

A. Grounding and bonding requirements.

B. Conductors for grounding and bonding.

C. Connectors for grounding and bonding.

1.02 RELATED REQUIREMENTS

A. Section 260519 - Low-Voltage Electrical Power Conductors and Cables: Additional requirements for conductors for grounding and bonding, including conductor color coding.
   1. Includes oxide inhibiting compound.

B. Section 260553 - Identification for Electrical Systems: Identification products and requirements.

C. Section 265600 - Exterior Lighting: Additional grounding and bonding requirements for pole-mounted luminaires.

1.03 REFERENCE STANDARDS

A. IEEE 81 - IEEE Guide for Measuring Earth Resistivity, Ground Impedance, and Earth Surface Potentials of a Grounding System.

B. NECA 1 - Standard for Good Workmanship in Electrical Construction.

C. NEMA GR 1 - Grounding Rod Electrodes and Grounding Rod Electrode Couplings.

D. NETA ATS - Standard for Acceptance Testing Specifications for Electrical Power Equipment And Systems.

E. NFPA 70 - National Electrical Code.

F. UL 467 - Grounding and Bonding Equipment.

1.04 ADMINISTRATIVE REQUIREMENTS

A. Coordination:
   1. Verify exact locations of underground metal water service pipe entrances to building.
   2. Coordinate the work with other trades to provide steel reinforcement complying with specified requirements for concrete-encased electrode.
   3. Notify Architect of any conflicts with or deviations from Contract Documents. Obtain direction before proceeding with work.

B. Sequencing:
   1. Do not install ground rod electrodes until final backfill and compaction is complete.

1.05 SUBMITTALS

A. No submittals required.

1.06 QUALITY ASSURANCE

A. Comply with requirements of NFPA 70.

B. Product Listing Organization Qualifications: An organization recognized by OSHA as a Nationally Recognized Testing Laboratory (NRTL) and acceptable to authorities having jurisdiction.

1.07 DELIVERY, STORAGE, AND HANDLING

A. Receive, inspect, handle, and store products in accordance with manufacturer's instructions.

PART 2 PRODUCTS

2.01 GROUNDING AND BONDING REQUIREMENTS

A. Existing Work: Where existing grounding and bonding system components are indicated to be reused, they may be reused only where they are free from corrosion, integrity and continuity are verified, and where acceptable to the authority having jurisdiction.

B. Do not use products for applications other than as permitted by NFPA 70 and product listing.

C. Provide all required components, conductors, connectors, conduit, boxes, fittings, supports, accessories, etc. as necessary for a complete grounding and bonding system.

D. Where conductor size is not indicated, size to comply with NFPA 70 but not less than applicable minimum size requirements specified.

E. Separately Derived System Grounding:
   1. Separately derived systems include, but are not limited to:
      a. Transformers (except autotransformers such as buck-boost transformers).
      b. Uninterruptible power supplies (UPS), when configured as separately derived systems.
   2. Provide grounding electrode conductor to connect derived system grounded conductor to nearest effectively grounded metal building frame. Unless otherwise indicated, make connection at neutral (grounded) bus in source enclosure.
   3. Provide bonding jumper to connect derived system grounded conductor to nearest metal building frame and nearest metal water piping in the area served by the derived system, where not already used as a grounding electrode for the derived system. Make connection at same location as grounding electrode conductor connection.
   4. Provide system bonding jumper to connect system grounded conductor to equipment ground bus. Make connection at same location as grounding electrode conductor connection. Do not make any other connections between neutral (grounded) conductors and ground on load side of separately derived system disconnect.
   5. Where the source and first disconnecting means are in separate enclosures, provide supply-side bonding jumper between source and first disconnecting means.

F. Bonding and Equipment Grounding:
   1. Provide bonding for equipment grounding conductors, equipment ground busses, metallic equipment enclosures, metallic raceways and boxes, device grounding terminals, and other normally non-current-carrying conductive materials enclosing electrical conductors/equipment or likely to become energized as indicated and in accordance with NFPA 70.
   2. Provide insulated equipment grounding conductor in each feeder and branch circuit raceway. Do not use raceways as sole equipment grounding conductor.
   3. Where circuit conductor sizes are increased for voltage drop, increase size of equipment grounding conductor proportionally in accordance with NFPA 70.
   4. Unless otherwise indicated, connect wiring device grounding terminal to branch circuit equipment grounding conductor and to outlet box with bonding jumper.
   5. Terminate branch circuit equipment grounding conductors on solidly bonded equipment ground bus only. Do not terminate on neutral (grounded) or isolated/insulated ground bus.
   6. Provide bonding jumper across expansion or expansion/deflection fittings provided to accommodate conduit movement.

2.02 GROUNDING AND BONDING COMPONENTS

A. General Requirements:
   1. Provide products listed, classified, and labeled as suitable for the purpose intended.
   2. Provide products listed and labeled as complying with UL 467 where applicable.

B. Conductors for Grounding and Bonding, in Addition to Requirements of Section 260526:
   1. Use insulated copper conductors:
      a. Exceptions:

1) Use bare tinned copper conductors where installed underground in direct contact with earth.
2) Use bare tinned copper conductors where directly encased in concrete (not in raceway).

C. Connectors for Grounding and Bonding:
1. Description: Connectors appropriate for the application and suitable for the conductors and items to be connected; listed and labeled as complying with UL 467.
2. Use exothermic welded connections for underground, concealed and other inaccessible connections.
3. Use mechanical connectors, compression connectors, or exothermic welded connections for accessible connections.
a. Exceptions:
1) Use exothermic welded connections for connections to metal building frame.
4. Manufacturers - Mechanical and Compression Connectors:
a. Advanced Lightning Technology (ALT): www.altfab.com/#sle.
b. Burndy LLC: www.burndy.com/#sle.
c. Erico International Corporation: www.erico.com
d. ILSCO: www.ilsco.com
e. Harger Lightning & Grounding: www.harger.com/#sle.
f. Thomas & Betts Corporation: www.tnb.com/#sle.
g. Substitutions: See Section 016000 - Product Requirements.
5. Manufacturers - Exothermic Welded Connections:
a. Burndy LLC: www.burndy.com/#sle.
b. Harger Lightning & Grounding: www.harger.com.
c. ThermOweld: www.thermoweld.com.
d. Substitutions: See Section 016000 - Product Requirements.

D. Oxide Inhibiting Compound: Comply with Section 260519.

PART 3 EXECUTION

3.01 EXAMINATION

A. Verify that work likely to damage grounding and bonding system components has been completed.

B. Verify that field measurements are as indicated.

C. Verify that conditions are satisfactory for installation prior to starting work.

3.02 INSTALLATION

A. Install products in accordance with manufacturer's instructions.

B. Perform work in accordance with NECA 1 (general workmanship).

C. Ground Rod Electrodes: Install ground rod electrodes vertically. Where encountered rock prohibits vertical installation, install at 45 degree angle or bury horizontally in trench at least 30 inches (750 mm) deep in accordance with NFPA 70 or provide ground plates.
1. Outdoor Installations: Install with top of rod 6 inches below finished grade.
2. Indoor Installations: Install with 4 inches of top of rod exposed.

D. Make grounding and bonding connections using specified connectors.
1. Remove appropriate amount of conductor insulation for making connections without cutting, nicking or damaging conductors. Do not remove conductor strands to facilitate insertion into connector.
2. Remove nonconductive paint, enamel, or similar coating at threads, contact points, and contact surfaces.
3. Exothermic Welds: Make connections using molds and weld material suitable for the items to be connected in accordance with manufacturer's recommendations.

4. Mechanical Connectors: Secure connections according to manufacturer's recommended torque settings.
5. Compression Connectors: Secure connections using manufacturer's recommended tools and dies.

E. Identify grounding and bonding system components in accordance with Section 260553.

3.03 FIELD QUALITY CONTROL

A. See Section 014000 - Quality Requirements, for additional requirements.

B. Inspect and test in accordance with NETA ATS except Section 4.

C. Perform inspections and tests listed in NETA ATS, Section 7.13.

D. Perform ground electrode resistance tests under normally dry conditions. Precipitation within the previous 48 hours does not constitute normally dry conditions.

E. Investigate and correct deficiencies where measured ground resistances do not comply with specified requirements.

F. Submit detailed reports indicating inspection and testing results and corrective actions taken.

END OF SECTION 260526

SECTION 260529
HANGERS AND SUPPORTS FOR ELECTRICAL SYSTEMS

PART 1 GENERAL

1.01 SECTION INCLUDES

A. Support and attachment requirements and components for equipment, conduit, cable, boxes, and other electrical work.

1.02 RELATED REQUIREMENTS

A. Section 033000 - Cast-in-Place Concrete: Concrete equipment pads.

B. Section 055000 - Metal Fabrications: Materials and requirements for fabricated metal supports.

C. Section 260533.13 - Conduit for Electrical Systems: Additional support and attachment requirements for conduits.

D. Section 260533.16 - Boxes for Electrical Systems: Additional support and attachment requirements for boxes.

E. Section 265100 - Interior Lighting: Additional support and attachment requirements for interior luminaires.

1.03 REFERENCE STANDARDS

A. ASTM A123/A123M - Standard Specification for Zinc (Hot-Dip Galvanized) Coatings on Iron and Steel Products.

B. ASTM A153/A153M - Standard Specification for Zinc Coating (Hot-Dip) on Iron and Steel Hardware.

C. ASTM B633 - Standard Specification for Electrodeposited Coatings of Zinc on Iron and Steel.

D. ASTM D635 - Standard Test Method for Rate of Burning and/or Extent and Time of Burning of Plastics in a Horizontal Position.

E. ASTM E84 - Standard Test Method for Surface Burning Characteristics of Building Materials.

F. MFMA-4 - Metal Framing Standards Publication.

G. NECA 1 - Standard for Good Workmanship in Electrical Construction.

H. NFPA 70 - National Electrical Code.

I. NFPA 101 - Life Safety Code.

J. UL 5B - Strut-Type Channel Raceways and Fittings.

1.04 ADMINISTRATIVE REQUIREMENTS

A. Coordination:
   1. Coordinate sizes and arrangement of supports and bases with actual equipment and components to be installed.
   2. Coordinate work to provide additional framing and materials required for installation.
   3. Coordinate compatibility of support and attachment components with mounting surfaces at installed locations.
   4. Coordinate arrangement of supports with ductwork, piping, equipment and other potential conflicts.
   5. Notify Architect of conflicts with or deviations from Contract Documents. Obtain direction before proceeding with work.

B. Sequencing:
   1. Do not install products on or provide attachment to concrete surfaces until concrete has cured; see Section 033000.

1.05 SUBMITTALS

A. No submittals required.

1.06 QUALITY ASSURANCE

A. Products: Listed and classified by a Nationally Recognized Testing Laboratory as suitable for the purpose specified and indicated.

B. Product Listing Organization Qualifications: Organization recognized by OSHA as Nationally Recognized Testing Laboratory (NRTL) and acceptable to authorities having jurisdiction.

1.07 DELIVERY, STORAGE, AND HANDLING

A. Receive, inspect, handle, and store products in accordance with manufacturer's instructions.

PART 2 PRODUCTS

2.01 SUPPORT AND ATTACHMENT COMPONENTS

A. General Requirements:
   1. Comply with the following. Where requirements differ, comply with most stringent.
      a. NFPA 70.
      b. Requirements of authorities having jurisdiction.
   2. Provide required hangers, supports, anchors, fasteners, fittings, accessories, and hardware as necessary for complete installation of electrical work.
   3. Provide products listed, classified, and labeled as suitable for purpose intended, where applicable.
   4. Do not use products for applications other than as permitted by NFPA 70 and product listing.
   5. Steel Components: Use corrosion-resistant materials suitable for environment where installed.
      a. Indoor Dry Locations: Use zinc-plated steel.
      b. Outdoor and Damp or Wet Indoor Locations: Use galvanized steel or stainless steel.
      c. Zinc-Plated Steel: Electroplated in accordance with ASTM B633.
      d. Galvanized Steel: Hot-dip galvanized after fabrication in accordance with ASTM A123/A123M or ASTM A153/A153M.

B. Conduit and Cable Supports: Straps and clamps suitable for conduit or cable to be supported.
   1. Conduit Straps: One-hole or two-hole type; steel or malleable iron.
   2. Conduit Clamps: Bolted type.

C. Outlet Box Supports: Hangers and brackets suitable for boxes to be supported.

D. Metal Channel/Strut Framing Systems:
   1. Description: Factory-fabricated, continuous-slot, metal channel/strut and associated fittings, accessories, and hardware required for field assembly of supports.
   2. Comply with MFMA-4.
   3. Channel Material:
      a. Indoor Dry Locations: Use painted steel, zinc-plated steel, or galvanized steel.
      b. Outdoor and Damp or Wet Indoor Locations: Use galvanized steel.
   4. Minimum Channel Thickness: Steel sheet, 12 gauge, 0.1046 inch.
   5. Minimum Channel Dimensions: 1-5/8 inch wide by 13/16 inch high.

E. Fiberglass Channel/Strut Framing Systems:
   1. Manufacturers:
      a. Atkore International Inc; Unistrut: www.unistrut.us/#sle.
      b. Champion Fiberglass: www.championfiberglass.com/#sle.
      c. Eaton Corporation: www.eaton.com/#sle.
      d. Enduro Composites: www.endurocomposites.com/#sle.
      e. Substitutions: See Section 016000 - Product Requirements.

f. Source Limitations: Furnish channel/strut and associated fittings, accessories, and hardware produced by single manufacturer.

2. Description: Factory-fabricated, continuous-slot, fiberglass channel/strut and associated fittings, accessories, and hardware required for field assembly of supports.
3. Flammability: Fire retardant with NFPA 101, Class A flame spread index, maximum of 25, when tested in accordance with ASTM E84; self extinguishing in accordance with ASTM D635.

F. Hanger Rods: Threaded zinc-plated steel.
1. Minimum Size, Unless Otherwise Indicated or Required:
   a. Equipment Supports: 1/2-inch diameter.
   b. Single Conduit up to 1-inch (27 mm) Trade Size: 1/4-inch diameter.
   c. Single Conduit Larger than 1-inch (27 mm) Trade Size: 3/8-inch diameter.
   d. Trapeze Support for Multiple Conduits: 3/8-inch diameter.
   e. Outlet Boxes: 1/4-inch diameter.
   f. Luminaires: 1/4-inch diameter.

G. Non-Penetrating Rooftop Supports for Low-Slope Roofs: Pedestals or blocks with thermoplastic or rubber bases that rest on top of roofing membrane, not requiring any attachment to the roof structure and not penetrating the roofing assembly.
1. Manufacturers:
   a. Atkore International Inc; Unistrut: www.unistrut.us/#sle.
   b. Eaton Corporation: www.eaton.com/#sle.
   c. nVent; Caddy: www.nvent.com/#sle.
   d. Substitutions: See Section 016000 - Product Requirements.
2. Description: Steel pedestals with thermoplastic or rubber bases that rest on top of roofing membrane, not requiring attachment to roof structure and not penetrating roofing assembly, with support fixtures as specified.
3. Size, as required, to distribute load sufficiently to prevent indentation of roofing assembly.
4. Utilize condiut straps at every rooftop support to positively attach rooftop conduit to rooftop supports.
5. Utilize slip pads, made of compatable rooftop material, at every rooftop support.
6. Attachment/Support Fixtures: As recommended by manufacturer, same type as indicated for equivalent indoor hangers and supports.
7. Mounting Height: Provide minimum clearance of 6 inches under supported component to top of roofing.
8. Manufacturers:
   a. Cooper B-Line, a division of Eaton Corporation; DURA-BLOCK: www.cooperindustries.com.
   b. Erico International Corporation; CADDY PYRAMID ST OR PYRAMID 50: www.erico.com/#sle.
   c. Substitutions: See Section 016000 - Product Requirements.

H. Anchors and Fasteners:
1. Concrete: Use preset concrete inserts or expansion anchors.
   a. Preset Concrete Inserts: Continuous metal channel (strut) and spot inserts specifically designed to be cast in concrete ceilings, walls, and floors.
      1) Comply with MFMA-4.
      2) Channel Material: Use galvanized steel.
2. Solid or Grout-Filled Masonry: Use expansion anchors.
3. Hollow Masonry: Use toggle bolts.
4. Hollow Stud Walls: Use toggle bolts.
5. Steel: Use beam clamps.
6. Sheet Metal: Use sheet metal screws.
7. Plastic and lead anchors are not permitted.

8. Powder-actuated fasteners are not permitted.
9. Hammer-driven anchors and fasteners are not permitted.
10. Preset Concrete Inserts: Continuous metal channel/strut and spot inserts specifically designed to be cast in concrete ceilings, walls, and floors.
    a. Comply with MFMA-4.
    b. Channel Material: Use galvanized steel.
    c. Minimum Channel Thickness: Steel sheet, 12 gauge, 0.1046 inch minimum base metal thickness.

PART 3 EXECUTION

3.01 EXAMINATION

A. Verify that field measurements are as indicated.

B. Verify that mounting surfaces are ready to receive support and attachment components.

C. Verify that conditions are satisfactory for installation prior to starting work.

3.02 INSTALLATION

A. Install products in accordance with manufacturer's instructions.

B. Install hangers and supports in accordance with NECA 1.

C. Provide independent support from building structure. Do not provide support from piping, ductwork, or other systems.

D. Unless specifically indicated or approved by Architect, do not provide support from suspended ceiling support system or ceiling grid.

E. Unless specifically indicated or approved by Architect, do not provide support from roof deck.

F. Do not penetrate or otherwise notch or cut structural members without approval of Structural Engineer.

G. Field Welding, Where Approved by Architect: See Section 055000.

H. Equipment Support and Attachment:
    1. Use metal, fabricated supports or supports assembled from metal channel/strut to support equipment as required.
    2. Use metal channel/strut secured to studs to support equipment surface mounted on hollow stud walls when wall strength is not sufficient to resist pull-out.
    3. Use metal channel/strut to support surface-mounted equipment in wet or damp locations to provide space between equipment and mounting surface.
    4. Securely fasten floor-mounted equipment. Do not install equipment such that it relies on its own weight for support.

I. Conduit Support and Attachment: See Section 260533.13 for additional requirements.

J. Box Support and Attachment: See Section 260533.16 for additional requirements.

K. Interior Luminaire Support and Attachment: See Section 265100 for additional requirements.

L. Preset Concrete Inserts: Use manufacturer provided closure strips to inhibit concrete seepage during concrete pour.

M. Secure fasteners in accordance with manufacturer's recommended torque settings.

N. Remove temporary supports.

O. Identify independent electrical component support wires above accessible ceilings, where permitted, with color distinguishable from ceiling support wires in accordance with NFPA 70.

3.03 FIELD QUALITY CONTROL

A. See Section 014000 - Quality Requirements for additional requirements.

B. Inspect support and attachment components for damage and defects.

C. Repair cuts and abrasions in galvanized finishes using zinc-rich paint recommended by manufacturer. Replace components that exhibit signs of corrosion.

D. Correct deficiencies and replace damaged or defective support and attachment components.

END OF SECTION 260529

SECTION 260533.13
CONDUIT FOR ELECTRICAL SYSTEMS

PART 1 GENERAL

1.01 SECTION INCLUDES

A. Galvanized steel rigid metal conduit (RMC).
B. Stainless steel rigid metal conduit (RMC).
C. Stainless steel intermediate metal conduit (IMC).
D. PVC-coated galvanized steel rigid metal conduit (RMC).
E. Flexible metal conduit (FMC).
F. Liquidtight flexible metal conduit (LFMC).
G. Galvanized steel electrical metallic tubing (EMT).
H. Stainless steel electrical metallic tubing (EMT).
I. Rigid polyvinyl chloride (PVC) conduit.

1.02 RELATED REQUIREMENTS

A. Section 078400 - Firestopping.
B. Section 260526 - Grounding and Bonding for Electrical Systems.
   1. Includes additional requirements for fittings for grounding and bonding.
C. Section 260529 - Hangers and Supports for Electrical Systems.
D. Section 260533.23 - Surface Raceways for Electrical Systems.
E. Section 260553 - Identification for Electrical Systems: Identification products and requirements.
F. Section 312316.13 - Trenching: Excavating, bedding, and backfilling.

1.03 REFERENCE STANDARDS

A. ANSI C80.1 - American National Standard for Electrical Rigid Steel Conduit (ERSC).
B. ANSI C80.3 - American National Standard for Electrical Metallic Tubing -- Steel (EMT-S).
C. NECA 1 - Standard for Good Workmanship in Electrical Construction.
D. NECA 101 - Standard for Installing Steel Conduits (Rigid, IMC, EMT).
E. NECA 111 - Standard for Installing Nonmetallic Raceways (RNC, ENT, LFNC).
F. NEMA FB 1 - Fittings, Cast Metal Boxes, and Conduit Bodies for Conduit, Electrical Metallic Tubing, and Cable.
G. NEMA RN 1 - Polyvinyl-Chloride (PVC) Externally Coated Galvanized Rigid Steel Metal Conduit and Intermediate Metal Conduit.
H. NEMA TC 2 - Electrical Polyvinyl Chloride (PVC) Conduit.
I. NEMA TC 3 - Polyvinyl Chloride (PVC) Fittings for Use with Rigid PVC Conduit and Tubing.
J. NFPA 70 - National Electrical Code.
K. UL 1 - Flexible Metal Conduit.
L. UL 6 - Electrical Rigid Metal Conduit-Steel.
M. UL 360 - Liquid-Tight Flexible Metal Conduit.
N. UL 514A - Metallic Outlet Boxes.
O. UL 514B - Conduit, Tubing, and Cable Fittings.
P. UL 651 - Schedule 40, 80, Type EB and A Rigid PVC Conduit and Fittings.
Q. UL 797 - Electrical Metallic Tubing-Steel.

R. UL 797A - Electrical Metallic Tubing - Aluminum and Stainless Steel.

S. UL 1203 - Explosion-Proof and Dust-Ignition-Proof Electrical Equipment for Use in Hazardous (Classified) Locations.

T. UL 2419 - Outline of Investigation for Electrically Conductive Corrosion Resistant Compounds.

1.04 ADMINISTRATIVE REQUIREMENTS

A. Coordination:
   1. Coordinate minimum sizes of conduits with actual type and quantity of conductors to be installed, including adjustments for conductor sizes increased for voltage drop.
   2. Coordinate arrangement of conduits with structural members, ductwork, piping, equipment, and other potential conflicts.
   3. Verify exact conduit termination locations required for boxes, enclosures, and equipment.
   4. Coordinate work to provide roof penetrations that preserve integrity of roofing system and do not void roof warranty.
   5. Notify Architect of conflicts with or deviations from Contract Documents. Obtain direction before proceeding with work.

B. Sequencing:
   1. Do not begin installation of conductors and cables until installation of conduit between termination points is complete.

1.05 SUBMITTALS

A. See Section 013000 - Administrative Requirements for submittals procedures.

1.06 QUALITY ASSURANCE

A. Products: Listed and classified by a Nationally Recognized Testing Laboratory as suitable for the purpose specified and indicated.

B. Product Listing Organization Qualifications: Organization recognized by OSHA as Nationally Recognized Testing Laboratory (NRTL) and acceptable to authorities having jurisdiction.

1.07 DELIVERY, STORAGE, AND HANDLING

A. Receive, inspect, handle, and store conduit and fittings in accordance with manufacturer's instructions.

PART 2 PRODUCTS

2.01 CONDUIT APPLICATIONS

A. Use the conduit types indicated for the specified applications. Where conduit type for a particular application is not specified, consult Architect.

B. Underground:
   1. Where rigid polyvinyl chloride (PVC) conduit is provided, transition to galvanized steel rigid metal conduit (RMC), stainless steel rigid metal conduit (RMC), galvanized steel intermediate metal conduit (IMC), stainless steel intermediate metal conduit (IMC), or schedule 80 rigid PVC conduit where emerging from underground.
   2. Where rigid polyvinyl (PVC) conduit larger than 2-inch (53 mm) trade size is provided, use galvanized steel rigid metal conduit (RMC) elbows, stainless steel rigid metal conduit (RMC) elbows, galvanized steel intermediate metal conduit (IMC) elbows, stainless steel intermediate metal conduit (IMC) elbows, PVC-coated galvanized steel rigid metal conduit (RMC) elbows, or concrete-encased PVC elbows for bends.

C. Embedded Within Concrete:
   1. Within Slab on Grade: Not permitted.
   2. Within Slab Above Ground: Not permitted.

D. Hazardous/Classified Locations: Use galvanized steel rigid metal conduit (RMC), stainless steel rigid metal conduit (RMC), galvanized steel intermediate metal conduit (IMC), stainless steel intermediate metal conduit (IMC), or PVC-coated galvanized steel rigid metal conduit (RMC).

E. Flexible Connections to Luminaires Above Accessible Ceilings: Use flexible metal conduit (FMC).

F. Flexible Connections to Vibrating Equipment:
   1. Dry Locations: Use flexible metal conduit (FMC).
   2. Damp, Wet, or Corrosive Locations: Use liquidtight flexible metal conduit (LFMC).
   3. Maximum Length: 6 feet unless otherwise indicated.

G. Fished in Existing Walls, Where Necessary: Use flexible metal conduit (FMC), galvanized steel electrical metallic tubing (EMT), or stainless steel electrical metallic tubing (EMT).

2.02 CONDUIT - GENERAL REQUIREMENTS

A. Comply with NFPA 70.

B. Existing Work: Where existing conduits are indicated to be reused, they may be reused only where they comply with specified requirements, are free from corrosion, and integrity is verified by pulling mandrel through them.

C. Structured Cabling for Voice and Data Systems: Conduits Only. See Owners low-voltage matrix of responsibility.

D. Fittings for Grounding and Bonding: See Section 260526 for additional requirements.

E. Provide conduit, fittings, supports, and accessories required for complete raceway system.

F. Provide products listed, classified, and labeled by testing firm acceptable to authority having jurisdiction as suitable for the purpose indicated.

G. Minimum Conduit Size:

H. Where conduit size is not indicated, size to comply with NFPA 70.

2.03 GALVANIZED STEEL RIGID METAL CONDUIT (RMC)

A. Manufacturers:
   1. Allied Tube & Conduit, a division of Atkore International: www.alliedeg.com/#sle.
   2. Western Tube, a division of Zekelman Industries: www.westerntube.com/#sle.
   3. Wheatland Tube, a division of Zekelman Industries: www.wheatland.com/#sle.
   4. Substitutions: See Section 016000 - Product Requirements.

B. Description: NFPA 70, Type RMC galvanized steel rigid metal conduit complying with ANSI C80.1 and listed and labeled as complying with UL 6.

C. Fittings:
   1. Manufacturers:
      a. Bridgeport Fittings Inc: www.bptfittings.com/#sle.
      b. O-Z/Gedney, a brand of Emerson Electric Co: www.emerson.com/#sle.
      c. Substitutions: See Section 016000 - Product Requirements.
   2. Nonhazardous Locations: Use fittings complying with NEMA FB 1 and listed and labeled as complying with UL 514B or UL 6.
   3. Hazardous/Classified Locations: Use fittings listed and labeled as complying with UL 1203 for classification of installed location.
   4. Material: Use steel or malleable iron.
      a. Do not use die cast zinc fittings.
   5. Connectors and Couplings: Use threaded type fittings only. Threadless fittings, including set screw and compression/gland types, are not permitted.

2.04 STAINLESS STEEL RIGID METAL CONDUIT (RMC)

A. Description: NFPA 70, Type RMC stainless steel rigid metal conduit complying with ANSI C80.1 and listed and labeled as complying with UL 6A.

B. Fittings:
   1. Nonhazardous Locations: Use fittings complying with NEMA FB 1 and listed and labeled as complying with UL 514B or UL 6A.
   2. Material: Use stainless steel with corrosion resistance equivalent to conduit.
   3. Connectors and Couplings: Use threaded type fittings only. Threadless fittings, including set screw and compression/gland types, are not permitted.

2.05 STAINLESS STEEL INTERMEDIATE METAL CONDUIT (IMC)

A. Description: NFPA 70, Type IMC galvanized steel intermediate metal conduit complying with ANSI C80.6 and listed and labeled as complying with UL 1242.

B. Fittings:
   1. Nonhazardous Locations: Use fittings complying with NEMA FB 1 and listed and labeled as complying with UL 514B or UL 1242.

2.06 PVC-COATED GALVANIZED STEEL RIGID METAL CONDUIT (RMC)

A. Manufacturers:
   1. Thomas & Betts Corporation: www.tnb.com.
   2. Robroy Industries: www.robroy.com.
   3. Substitutions: Not permitted.

B. Description: NFPA 70, Type RMC galvanized steel rigid metal conduit with external polyvinyl chloride (PVC) coating complying with NEMA RN 1 and listed and labeled as complying with UL 6.

C. Exterior Coating: Polyvinyl chloride (PVC), nominal thickness of 40 mil, 0.040 inch.

D. Interior Coating: Urethane, minimum thickness of 2 mil, 0.002 inch.

E. PVC-Coated Boxes and Fittings:
   1. Manufacturer: Same as manufacturer of PVC-coated conduit to be installed.
   2. Nonhazardous Locations: Use boxes and fittings listed and labeled as complying with UL 514A, UL 514B, or UL 6.
   3. Hazardous/Classified Locations: Use fittings listed and labeled as complying with UL 1203 for classification of installed location.
   4. Material: Use steel or malleable iron.
   5. Exterior Coating: Polyvinyl chloride (PVC), minimum thickness of 40 mil, 0.040 inch.
   6. Interior Coating: Urethane, minimum thickness of 2 mil, 0.002 inch.

F. PVC-Coated Supports: Furnish with exterior coating of polyvinyl chloride (PVC), minimum thickness of 15 mil, 0.015 inch.

2.07 FLEXIBLE METAL CONDUIT (FMC)

A. Manufacturers:
   1. AFC Cable Systems, Inc: www.afcweb.com.
   2. Electri-Flex Company: www.electriflex.com.
   3. International Metal Hose: www.metalhose.com.
   4. Substitutions: See Section 016000 - Product Requirements.

B. Description: NFPA 70, Type FMC standard-wall steel flexible metal conduit listed and labeled as complying with UL 1, and listed for use in classified firestop systems.

C. Fittings:
   1. Manufacturers:
      a. Bridgeport Fittings Inc: www.bptfittings.com/#sle.
      b. O-Z/Gedney, a brand of Emerson Electric Co: www.emerson.com/#sle.

c. Substitutions: See Section 016000 - Product Requirements.
2. Description: Fittings complying with NEMA FB 1 and listed and labeled as complying with UL 514B.
3. Material: Use steel or malleable iron.
a. Do not use die cast zinc fittings.

2.08 LIQUIDTIGHT FLEXIBLE METAL CONDUIT (LFMC)

A. Manufacturers:
1. AFC Cable Systems, Inc: www.afcweb.com.
2. Electri-Flex Company: www.electriflex.com.
3. International Metal Hose: www.metalhose.com.
4. Substitutions: See Section 016000 - Product Requirements.

B. Description: NFPA 70, Type LFMC polyvinyl chloride (PVC) jacketed steel flexible metal conduit listed and labeled as complying with UL 360.

C. Fittings:
1. Manufacturers:
a. Bridgeport Fittings Inc: www.bptfittings.com/#sle.
b. O-Z/Gedney, a brand of Emerson Electric Co: www.emerson.com/#sle.
c. Substitutions: See Section 016000 - Product Requirements.
2. Description: Fittings complying with NEMA FB 1 and listed and labeled as complying with UL 514B.
3. Material: Use steel or malleable iron.
a. Do not use die cast zinc fittings.

2.09 GALVANIZED STEEL ELECTRICAL METALLIC TUBING (EMT)

A. Manufacturers:
1. Allied Tube & Conduit: www.alliedeg.com.
2. Nucor Tubular Products: www.nucortubular/#sle.
3. Wheatland Tube Company: www.wheatland.com.
4. Substitutions: See Section 016000 - Product Requirements.

B. Description: NFPA 70, Type EMT galvanized steel electrical metallic tubing complying with ANSI C80.3 and listed and labeled as complying with UL 797.

C. Fittings:
1. Manufacturers:
a. Bridgeport Fittings Inc: www.bptfittings.com/#sle.
b. O-Z/Gedney, a brand of Emerson Electric Co: www.emerson.com/#sle.
c. Substitutions: See Section 016000 - Product Requirements.
2. Description: Fittings complying with NEMA FB 1 and listed and labeled as complying with UL 514B.
3. Material: Use steel or malleable iron.
a. Do not use die cast zinc fittings.
4. Connectors and Couplings: Use compression/gland or set-screw type.
a. Do not use indenter type connectors and couplings.

2.10 STAINLESS STEEL ELECTRICAL METALLIC TUBING (EMT)

A. Description: NFPA 70, Type EMT stainless steel electrical metallic tubing complying with ANSI C80.3 and listed and labeled as complying with UL 797A.

B. Fittings:
1. Description: Fittings complying with NEMA FB 1 and listed and labeled as complying with UL 514B.
2. Connectors and Couplings: Use compression/gland or set-screw type.

2.11 RIGID POLYVINYL CHLORIDE (PVC) CONDUIT

A. Manufacturers:
   1. Cantex Inc: www.cantexinc.com/#sle.
   2. JM Eagle: www.jmeagle.com/#sle.
   3. Substitutions: See Section 016000 - Product Requirements.

B. Description: NFPA 70, Type PVC rigid polyvinyl chloride conduit complying with NEMA TC 2 and listed and labeled as complying with UL 651; Schedule 40 unless otherwise indicated, Schedule 80 where subject to physical damage; rated for use with conductors rated 90 degrees C.

C. Fittings:
   1. Manufacturer: Same as manufacturer of conduit to be connected.
   2. Description: Fittings complying with NEMA TC 3 and listed and labeled as complying with UL 651; material to match conduit.

2.12 ACCESSORIES

A. Corrosion Protection Tape: PVC-based, minimum thickness of 20 mil, 0.020 inch.

B. Conduit Joint Compound: Corrosion-resistant, electrically conductive compound listed as complying with UL 2419; suitable for use with conduit to be installed.

C. Solvent Cement for PVC Conduit and Fittings: As recommended by manufacturer of conduit and fittings to be installed.

D. Pull Strings: Use nylon or polyester tape with average breaking strength of not less than 1,250 lbf.

E. Sealing Compound for Hazardous/Classified Location Sealing Fittings: Listed for use with particular fittings to be installed.

F. Sealing Systems for Concrete Penetrations:
   1. Sleeves: Provide water stop ring or cement coating that bonds to concrete to prevent water infiltration.
   2. Rate for minimum of 40 psig; suitable for sealing around conduits to be installed.

PART 3 EXECUTION

3.01 EXAMINATION

A. Verify that field measurements are as indicated.

B. Verify that mounting surfaces are ready to receive conduits.

C. Verify that conditions are satisfactory for installation prior to starting work.

D. Verify routing and termination locations of conduit prior to rough-in.

3.02 INSTALLATION

A. Install products in accordance with manufacturer's instructions.

B. Install conduit in accordance with NECA 1.

C. Install galvanized steel rigid metal conduit (RMC) in accordance with NECA 101.

D. Install PVC-coated galvanized steel rigid metal conduit (RMC) using only tools approved by manufacturer.

E. Install rigid polyvinyl chloride (PVC) conduit in accordance with NECA 111.

F. Conduit Routing:
   1. Unless dimensioned, conduit routing indicated is diagrammatic.
   2. When conduit destination is indicated without specific routing, determine exact routing required.
   3. Conceal conduits unless specifically indicated to be exposed.
   4. Conduits in the following areas may be exposed, unless otherwise indicated:

a. Electrical rooms.
b. Mechanical equipment rooms.
c. Within joists in areas with no ceiling.

5. Unless otherwise approved, do not route exposed conduits:
   a. Across floors.
   b. Across top of parapet walls.
   c. Across building exterior surfaces.
6. Arrange conduit to maintain adequate headroom, clearances, and access.
7. Arrange conduit to provide no more than equivalent of four 90-degree bends between pull points.
8. Arrange conduit to provide no more than 150 feet between pull points.
9. Route conduits above water and drain piping where possible.
10. Arrange conduit to prevent moisture traps. Provide drain fittings at low points and at sealing fittings where moisture may collect.
11. Maintain minimum clearance of 6 inches between conduits and piping for other systems.
12. Maintain minimum clearance of 12 inches between conduits and hot surfaces. This includes, but is not limited to:
    a. Heaters.
    b. Hot water piping.
    c. Flues.
13. Group parallel conduits in same area on common rack.

G. Conduit Support:
1. Secure and support conduits in accordance with NFPA 70 using suitable supports and methods approved by authorities having jurisdiction; see Section 260529.
2. Provide independent support from building structure. Do not provide support from piping, ductwork, or other systems.
3. Installation Above Suspended Ceilings: Do not provide support from ceiling support system. Do not provide support from ceiling grid or allow conduits to lay on ceiling tiles.
4. Use conduit strap to support single surface-mounted conduit.
   a. Use clamp back spacer with conduit strap for damp and wet locations to provide space between conduit and mounting surface.
5. Use metal channel/strut with accessory conduit clamps to support multiple parallel surface-mounted conduits.
6. Use conduit clamp to support single conduit from beam clamp or threaded rod.
7. Use trapeze hangers assembled from threaded rods and metal channel/strut with accessory conduit clamps to support multiple parallel suspended conduits.
8. Use nonpenetrating rooftop supports to support conduits routed across rooftops, where approved.
9. Use of spring steel conduit clips for support of conduits is not permitted.
10. Use of wire for support of conduits is not permitted.
11. Where conduit support intervals specified in NFPA 70 and NECA standards differ, comply with most stringent requirements.

H. Connections and Terminations:
1. Use approved zinc-rich paint or conduit joint compound on field-cut threads of galvanized steel conduits prior to making connections.
2. Where two threaded conduits must be joined and neither can be rotated, use three-piece couplings or split couplings. Do not use running threads.
3. Use suitable adapters where required to transition from one type of conduit to another.
4. Provide drip loops for liquidtight flexible conduit connections to prevent drainage of liquid into connectors.
5. Terminate threaded conduits in boxes and enclosures using threaded hubs or double lock nuts for dry locations and raintight hubs for wet locations.

6. Where spare conduits stub up through concrete floors and are not terminated in box or enclosure, provide threaded couplings equipped with threaded plugs set flush with finished floor.
7. Provide insulating bushings, insulated throats, or listed metal fittings with smooth, rounded edges at conduit terminations to protect conductors.
8. Secure joints and connections to provide mechanical strength and electrical continuity.

I. Penetrations:
1. Do not penetrate or otherwise notch or cut structural members, including footings and grade beams, without approval of Structural Engineer.
2. Make penetrations perpendicular to surfaces.
3. Provide sleeves for penetrations as required to facilitate installation. Set sleeves flush with exposed surfaces unless otherwise indicated or required.
4. Conceal bends for conduit risers emerging above ground.
5. Provide suitable sealing system where conduits penetrate exterior wall below grade.
6. Where conduits penetrate waterproof membrane, seal to maintain integrity of membrane.
7. Provide decorative metal escutcheon plates for conduit penetrations exposed to public view.
8. Install firestopping to preserve fire resistance rating of partitions and other elements; see Section 078400.

J. Underground Installation:
1. Provide trenching and backfilling; see Section 312316.13.
2. Backfill with red flowable-fill to a minimum of 4 inches above underground conduits.
   a. Anchor underground conduits at 10 foot intervals to trench bottom to avoid floating after flowable fill is poured.
3. Minimum Conduit Depth:
   a. Underground, Exterior: 18 inches.
   b. Under Slab on Grade: 12 inches to bottom of slab.

K. Conduit Movement Provisions: Where conduits are subject to movement, provide expansion and expansion/deflection fittings to prevent damage to enclosed conductors or connected equipment. This includes, but is not limited to:
1. Where conduits cross structural joints intended for expansion, contraction, or deflection.
2. Where calculated in accordance with NFPA 70 for rigid polyvinyl chloride (PVC) conduit installed above ground to compensate for thermal expansion and contraction.
3. Where conduits are subject to earth movement by settlement or frost.

L. Conduit Sealing:
1. Use foam conduit sealant to prevent entry of moisture and gases. This includes, but is not limited to:
   a. Where conduits enter building from outside.
   b. Where service conduits enter building from underground distribution system.
   c. Where conduits enter building from underground.
   d. Where conduits may transport moisture to contact live parts.
2. Where conduits cross barriers between areas of potential substantial temperature differential, use foam conduit sealant at accessible point near penetration to prevent condensation. This includes, but is not limited to:
   a. Where conduits pass from outdoors into conditioned interior spaces.
   b. Where conduits pass from unconditioned interior spaces into conditioned interior spaces.

M. Provide pull string in each empty conduit and in conduits where conductors and cables are to be installed by others. Leave minimum slack of 12 inches at each end.

N. Provide grounding and bonding; see Section 260526.

O. Identify conduits; see Section 260553.

3.03 FIELD QUALITY CONTROL

A. See Section 014000 - Quality Requirements for additional requirements.

B. Repair cuts and abrasions in galvanized finishes using zinc-rich paint recommended by manufacturer. Replace components that exhibit signs of corrosion.

C. Where coating of PVC-coated galvanized steel rigid metal conduit (RMC) contains cuts or abrasions, repair in accordance with manufacturer's instructions.

D. Correct deficiencies and replace damaged or defective conduits.

3.04 CLEANING

A. Clean interior of conduits to remove moisture and foreign matter.

3.05 PROTECTION

A. Immediately after installation of conduit, use suitable manufactured plugs to provide protection from entry of moisture and foreign material and do not remove until ready for installation of conductors.

END OF SECTION 260533.13

SECTION 260533.16
BOXES FOR ELECTRICAL SYSTEMS

PART 1 GENERAL

1.01 SECTION INCLUDES

A. Outlet and device boxes up to 100 cubic inches, including those used as junction and pull boxes.

B. Cabinets and enclosures, including junction and pull boxes larger than 100 cubic inches.

C. Boxes for hazardous (classified) locations.

D. Floor boxes.

E. Underground boxes/enclosures.

1.02 RELATED REQUIREMENTS

A. Section 033000 - Cast-in-Place Concrete.

B. Section 078400 - Firestopping.

C. Section 083100 - Access Doors and Panels: Panels for maintaining access to concealed boxes.

D. Section 260526 - Grounding and Bonding for Electrical Systems.

E. Section 260529 - Hangers and Supports for Electrical Systems.

F. Section 260533.13 - Conduit for Electrical Systems:
   1. Conduit bodies and other fittings.
   2. Additional requirements for locating boxes to limit conduit length and/or number of bends between pulling points.

G. Section 260533.23 - Surface Raceways for Electrical Systems:
   1. Accessory boxes designed specifically for surface raceway systems.
   2. Lay-in wireways and wiring troughs with removable covers.

H. Section 260553 - Identification for Electrical Systems: Identification products and requirements.

I. Section 262726 - Wiring Devices:
   1. Wall plates.
   2. Floor box service fittings.
   3. Additional requirements for locating boxes for wiring devices.

J. Section 271000 - Structured Cabling: Additional requirements for communications systems outlet boxes.

1.03 REFERENCE STANDARDS

A. NECA 1 - Standard for Good Workmanship in Electrical Construction.

B. NECA 130 - Standard for Installing and Maintaining Wiring Devices.

C. NEMA EN 10250 - Enclosures for Electrical Equipment (1000 Volts Maximum).

D. NEMA FB 1 - Fittings, Cast Metal Boxes, and Conduit Bodies for Conduit, Electrical Metallic Tubing, and Cable.

E. NEMA OS 1 - Sheet-Steel Outlet Boxes, Device Boxes, Covers, and Box Supports.

F. NEMA OS 2 - Nonmetallic Outlet Boxes, Device Boxes, Covers and Box Supports.

G. NFPA 70 - National Electrical Code.

H. SCTE 77 - Specifications for Underground Enclosure Integrity.

I. UL 50 - Enclosures for Electrical Equipment, Non-Environmental Considerations.

J. UL 50E - Enclosures for Electrical Equipment, Environmental Considerations.

K. UL 508A - Industrial Control Panels.

L. UL 514A - Metallic Outlet Boxes.

M. UL 514C - Nonmetallic Outlet Boxes, Flush-Device Boxes, and Covers.

N. UL 1203 - Explosion-Proof and Dust-Ignition-Proof Electrical Equipment for Use in Hazardous (Classified) Locations.

1.04 ADMINISTRATIVE REQUIREMENTS

A. Coordination:
   1. Coordinate the work with other trades to avoid placement of ductwork, piping, equipment, or other potential obstructions within the dedicated equipment spaces and working clearances for electrical equipment required by NFPA 70.
   2. Coordinate arrangement of electrical equipment with the dimensions and clearance requirements of the actual equipment to be installed.
   3. Coordinate minimum sizes of boxes with the actual installed arrangement of conductors, clamps, support fittings, and devices, calculated according to NFPA 70.
   4. Coordinate minimum sizes of pull boxes with the actual installed arrangement of connected conduits, calculated according to NFPA 70.
   5. Coordinate the placement of boxes with millwork, furniture, devices, equipment, etc. installed under other sections or by others.
   6. Coordinate the work with other trades to preserve insulation integrity.
   7. Coordinate the work with other trades to provide walls suitable for installation of flush-mounted boxes where indicated.
   8. Notify Architect of any conflicts with or deviations from Contract Documents. Obtain direction before proceeding with work.

1.05 SUBMITTALS

A. See Section 013000 - Administrative Requirements, for submittal procedures.

B. Product Data: Provide manufacturer's standard catalog pages and data sheets for boxes for hazardous (classified) locations, floor boxes, underground boxes/enclosures, and boxes/cabinets/enclosures over 100 cubic inches.
   1. Outlet and device box submittals are not required.

C. Maintenance Materials: Furnish the following for Owner's use in maintenance of project.
   1. See Section 016000 - Product Requirements, for additional provisions.
   2. Keys for Lockable Enclosures: Two of each different key.

1.06 QUALITY ASSURANCE

A. Comply with requirements of NFPA 70.

B. Comply with NEMA 250 for electrical cabinets and enclosures larger than 100 cubic inches (1,650 cu cm).

C. Comply with SCTE 77 for Polymer Concrete Underground Boxes/Enclosures.

D. Products: Listed and classified by a Nationally Recognized Testing Laboratory as suitable for the purpose specified and indicated.

E. Product Listing Organization Qualifications: An organization recognized by OSHA as a Nationally Recognized Testing Laboratory (NRTL) and acceptable to authorities having jurisdiction.

1.07 DELIVERY, STORAGE, AND HANDLING

A. Receive, inspect, handle, and store products in accordance with manufacturer's instructions.

PART 2 PRODUCTS

2.01 BOXES

A. General Requirements:

1. Do not use boxes and associated accessories for applications other than as permitted by NFPA 70 and product listing.
2. Provide all boxes, fittings, supports, and accessories required for a complete raceway system and to accommodate devices and equipment to be installed.
3. Provide products listed, classified, and labeled as suitable for the purpose intended.
4. Where box size is not indicated, size to comply with NFPA 70 but not less than applicable minimum size requirements specified.
5. Provide grounding terminals within boxes where equipment grounding conductors terminate.

B. Outlet and Device Boxes Up to 100 cubic inches, Including Those Used as Junction and Pull Boxes:
1. Use sheet-steel boxes for dry locations unless otherwise indicated or required.
2. Use cast iron boxes for damp or wet locations; furnish with compatible weatherproof gasketed covers.
3. Use cast iron boxes where exposed galvanized steel rigid metal conduit is used.
4. Use suitable concrete type boxes where flush-mounted in concrete.
5. Use suitable masonry type boxes where flush-mounted in masonry walls.
6. Use raised covers suitable for the type of wall construction and device configuration where required.
7. Use shallow boxes where required by the type of wall construction.
8. Do not use "through-wall" boxes designed for access from both sides of wall.
9. Sheet-Steel Boxes: Comply with NEMA OS 1, and list and label as complying with UL 514A.
10. Cast Metal Boxes: Comply with NEMA FB 1, and list and label as complying with UL 514A; furnish with threaded hubs.
11. Boxes for Supporting Luminaires and Ceiling Fans: Listed as suitable for the type and weight of load to be supported; furnished with fixture stud to accommodate mounting of luminaire where required.
12. Boxes for Ganged Devices: Use multigang boxes of single-piece construction. Do not use field-connected gangable boxes unless specifically indicated or permitted.
13. Wall Plates: Comply with Section 262726.
14. Manufacturers:
    a. Cooper Crouse-Hinds, a division of Eaton Corporation: www.cooperindustries.com/#sle.
    b. Hubbell Incorporated; Bell Products: www.hubbell-rtb.com/#sle.
    c. Hubbell Incorporated; RACO Products: www.hubbell-rtb.com/#sle.
    d. O-Z/Gedney, a brand of Emerson Electric Co: www.emerson.com/#sle.
    e. Thomas & Betts Corporation: www.tnb.com/#sle.
    f. Substitutions: See Section 016000 - Product Requirements.

C. Cabinets and Enclosures, Including Junction and Pull Boxes Larger Than 100 cubic inches:
1. Comply with NEMA EN 10250, and list and label as complying with UL 50 and UL 50E, or UL 508A.
2. NEMA EN 10250 Environment Type, Unless Otherwise Indicated:
    a. Indoor Clean, Dry Locations: Type 1, painted steel.
    b. Outdoor Locations: Type 3R, painted steel.
    c. Wet, Damp, or Corrosive Locations: Type 4X, stainless steel or fiberglass.
3. Junction and Pull Boxes Larger Than 100 cubic inches:
    a. Provide screw-cover or hinged-cover enclosures unless otherwise indicated.
    b. Boxes 6 square feet and Larger: Provide sectionalized screw-cover or hinged-cover enclosures.
4. Cabinets and Hinged-Cover Enclosures, Other Than Junction and Pull Boxes:
    a. Provide lockable hinged covers, all locks keyed alike unless otherwise indicated.
    b. Back Panels: Painted steel, removable.

c. Terminal Blocks: Provide voltage/current ratings and terminal quantity suitable for purpose indicated, with 25 percent spare terminal capacity.

5. Finish for Painted Steel Enclosures: Manufacturer's standard grey unless otherwise indicated.
6. Manufacturers:
   a. Cooper B-Line, a division of Eaton Corporation: www.cooperindustries.com/#sle.
   b. Hoffman, a brand of Pentair Technical Products: www.hoffmanonline.com/#sle.
   c. Hubbell Incorporated; Wiegmann Products: www.hubbell-wiegmann.com/#sle.
   d. Substitutions: See Section 016000 - Product Requirements.

D. Boxes for Hazardous (Classified) Locations: Listed and labeled as complying with UL 1203 for the classification of the installed location.
1. Manufacturers:
   a. Appleton, a brand of Emerson Electric Co: www.emerson.com/#sle.
   b. Cooper Crouse-Hinds, a division of Eaton Corporation: www.cooperindustries.com/#sle.
   c. Hubbell Incorporated; Killark Products: www.hubbell-killark.com/#sle.
   d. Substitutions: See Section 016000 - Product Requirements.

E. Floor Boxes:
1. Description: Floor boxes compatible with floor box service fittings provided in accordance with Section 262726; with partitions to separate multiple services; furnished with all components, adapters, and trims required for complete installation.
2. Use nonmetallic floor boxes within slab on grade.
3. Use sheet-steel or nonmetallic floor boxes within slab above grade.
4. Metallic Floor Boxes: Fully adjustable (with integral means for leveling adjustment prior to and after concrete pour).
5. Non-Metallic Floor Boxes: Adjustable (with means for leveling adjustment prior to and after concrete pour).
6. Manufacturer: Same as manufacturer of floor box service fittings.

F. In-ground Boxes/Enclosures:
1. Description: In-ground, open bottom boxes furnished with flush, non-skid covers with legend indicating type of service and stainless steel tamper resistant cover bolts.
2. Size: As indicated on drawings.
3. Depth: As required to extend below frost line to prevent frost upheaval, but not less than 12 inches.
4. Provide logo on cover to indicate type of service.
5. Applications:
   a. Sidewalks and Landscaped Areas Subject Only to Occasional Nondeliberate Vehicular Traffic: Use polymer concrete enclosures with minimum SCTE 77 Tier 5 load rating.
   b. Do not use polymer concrete enclosures in areas subject to deliberate vehicular traffic.
6. Polymer Concrete Underground Boxes/Enclosures: Comply with SCTE 77.
   a. Manufacturers:
      1) Hubbell Incorporated; Quazite Products: www.hubbellpowersystems.com/#sle.
      2) MacLean Highline: www.macleanhighline.com/#sle.
      3) Oldcastle Precast, Inc: www.oldcastleprecast.com/#sle.
      4) Substitutions: See Section 016000 - Product Requirements.
   b. Combination fiberglass/polymer concrete boxes/enclosures are acceptable.

PART 3 EXECUTION

3.01 EXAMINATION

A. Verify that field measurements are as indicated.

B. Verify that mounting surfaces are ready to receive boxes.

C. Verify that conditions are satisfactory for installation prior to starting work.

3.02 INSTALLATION

A. Install products in accordance with manufacturer's instructions.

B. Perform work in a neat and workmanlike manner in accordance with NECA 1 and, where applicable, NECA 130.

C. Arrange equipment to provide minimum clearances in accordance with manufacturer's instructions and NFPA 70.

D. Provide separate boxes for emergency power and normal power systems.

E. Provide separate boxes for line voltage and low voltage systems.

F. Flush-mount boxes in finished areas.

G. Boxes may be surface-mounted where exposed conduits are permitted.

H. Box Locations:
   1. Locate boxes to be accessible. Provide access panels in accordance with Section 083100.
   2. Unless dimensioned, box locations indicated are approximate.
      a. Owner must approve any adjustment to box locations for wall devices.
   3. Locate boxes for devices installed under other sections:
      a. Switches, Receptacles, and Other Wiring Devices: Comply with Section 262726.
      b. Communications Systems Outlets: Comply with Section 271000.
   4. Locate boxes so that wall plates do not span different building finishes.
   5. Locate boxes so that wall plates do not cross masonry joints.
   6. Unless otherwise indicated, where multiple outlet boxes are installed at the same location at different mounting heights, install along a common vertical center line.
   7. Do not install flush-mounted boxes on opposite sides of walls back-to-back. Provide minimum 6 inches horizontal separation unless otherwise indicated.
   8. Acoustic-Rated Walls: Do not install flush-mounted boxes on opposite sides of walls back-to-back; provide minimum 24 inches horizontal separation.
   9. Fire Resistance Rated Walls: Install flush-mounted boxes such that the required fire resistance will not be reduced.
      a. Do not install flush-mounted boxes on opposite sides of walls back-to-back; provide minimum 24 inches separation where wall is constructed with individual noncommunicating stud cavities or protect both boxes with listed putty pads.
      b. Do not install flush-mounted boxes with area larger than 16 square inches or such that the total aggregate area of openings exceeds 100 square inches for any 100 square feet of wall area.
   10. Locate junction and pull boxes to facilitate installation of conductors, and to limit conduit length and/or number of bends between pulling points in accordance with Section 260534.
   11. Locate junction and pull boxes in the following areas:
      a. Concealed above accessible suspended ceilings.
      b. Within joists in areas with no ceiling.
      c. Electrical rooms.
      d. Mechanical equipment rooms.

I. Box Supports:
   1. Secure and support boxes in accordance with NFPA 70 and Section 260529 using suitable supports and methods approved by the authority having jurisdiction.
   2. Provide independent support from building structure. Do not provide support from piping, ductwork, or other systems.
   3. Installation Above Suspended Ceilings: Do not provide support from ceiling grid or ceiling support system.

4. Use far-side support to secure flush-mounted boxes supported from single stud in hollow stud walls. Replace supports for boxes that permit excessive movement.

J. Install boxes plumb and level.

K. Flush-Mounted Boxes:
   1. Install boxes in noncombustible materials such as concrete, tile, gypsum, plaster, etc. so that front edge of box or associated raised cover is not set back from finished surface more than 1/4 inch or does not project beyond finished surface.
   2. Install boxes in combustible materials such as wood so that front edge of box or associated raised cover is flush with finished surface.

L. Floor-Mounted Cabinets: Mount on properly sized 4 inch high concrete pad constructed in accordance with Section 033000.

M. Install boxes as required to preserve insulation integrity.

N. Metallic Floor Boxes: Install box level at the proper elevation to be flush with finished floor.

O. Nonmetallic Floor Boxes: Cut box flush with finished floor after concrete pour.

P. In-ground Boxes/Enclosures:
   1. Install enclosure on gravel base, minimum 6 inches deep.
   2. Flush-mount enclosures located in concrete or paved areas.
   3. Mount enclosures located in landscaped areas with top at 1 inch above finished grade.
   4. Install additional bracing inside enclosures in accordance with manufacturer's instructions to minimize box sidewall deflections during backfilling. Backfill with cover bolted in place.

Q. Install permanent barrier between ganged wiring devices when voltage between adjacent devices exceeds 300 V.

R. Install firestopping to preserve fire resistance rating of partitions and other elements, using materials and methods specified in Section 078400.

S. Close unused box openings.

T. Install blank wall plates on junction boxes and on outlet boxes with no devices or equipment installed or designated for future use.

U. Provide grounding and bonding in accordance with Section 260526.

V. Identify boxes in accordance with Section 260553.

3.03 CLEANING

A. Clean interior of boxes to remove dirt, debris, plaster and other foreign material.

3.04 PROTECTION

A. Immediately after installation, protect boxes from entry of moisture and foreign material until ready for installation of conductors.

END OF SECTION 260533.16

SECTION 260533.23
SURFACE RACEWAYS FOR ELECTRICAL SYSTEMS

PART 1 GENERAL

1.01 SECTION INCLUDES

A. Surface raceway systems.

B. Wireways.

C. Floor raceway systems.

1.02 RELATED REQUIREMENTS

A. Section 260526 - Grounding and Bonding for Electrical Systems.

B. Section 260529 - Hangers and Supports for Electrical Systems.

C. Section 260533.13 - Conduit for Electrical Systems.

D. Section 260533.16 - Boxes for Electrical Systems.

E. Section 260553 - Identification for Electrical Systems: Identification products and requirements.

F. Section 262723 - Indoor Service Poles.

G. Section 262726 - Wiring Devices: Receptacles.

1.03 REFERENCE STANDARDS

A. NECA 1 - Standard for Good Workmanship in Electrical Construction.

B. NEMA BI 50061 - Installation Guidelines for Surface and Nonmetallic Raceway.

C. NEMA EN 10250 - Enclosures for Electrical Equipment (1000 Volts Maximum).

D. NFPA 70 - National Electrical Code.

E. UL 5 - Surface Metal Raceways and Fittings.

F. UL 5A - Nonmetallic Surface Raceways and Fittings.

G. UL 111 - Outline of Investigation for Multioutlet Assemblies.

H. UL 870 - Wireways, Auxiliary Gutters, and Associated Fittings.

1.04 ADMINISTRATIVE REQUIREMENTS

A. Coordination:
   1. Coordinate the placement of raceways with millwork, furniture, equipment, etc. installed under other sections or by others.
   2. Coordinate rough-in locations of outlet boxes provided under Section 260533.16 and conduit provided under Section 260533.13 as required for installation of raceways provided under this section.
   3. Verify minimum sizes of raceways with the actual conductors and components to be installed.
   4. Floor raceway systems: Coordinate the work with other trades to provide floors suitable for installation of floot raceway systems where indicated.
   5. Notify Architect of any conflicts with or deviations from Contract Documents. Obtain direction before proceeding with work.

B. Sequencing:
   1. Do not install raceways until final surface finishes and painting are complete.
   2. Do not begin installation of conductors and cables until installation of raceways is complete between outlet, junction and splicing points.

1.05 SUBMITTALS

A. See Section 013000 - Administrative Requirements, for submittal procedures.

B. Product Data: Provide manufacturer's standard catalog pages and data sheets including dimensions, knockout sizes and locations, materials, fabrication details, finishes, service condition requirements, and accessories.
   1. Surface Raceway Systems: Include information on fill capacities for conductors and cables.

1.06 QUALITY ASSURANCE

A. Comply with requirements of NFPA 70.

B. Product Listing Organization Qualifications: An organization recognized by OSHA as a Nationally Recognized Testing Laboratory (NRTL) and acceptable to authorities having jurisdiction.

1.07 DELIVERY, STORAGE, AND HANDLING

A. Receive, inspect, handle, and store products in accordance with manufacturer's instructions.

PART 2 PRODUCTS

2.01 RACEWAY REQUIREMENTS

A. Provide all components, fittings, supports, and accessories required for a complete raceway system.

B. Provide products listed, classified, and labeled as suitable for the purpose intended.

C. Do not use raceways for applications other than as permitted by NFPA 70 and product listing.

2.02 SURFACE RACEWAY SYSTEMS

A. Manufacturers:
   1. Hubbell Incorporated; _____: www.hubbell.com/#sle.
   2. Wiremold, a brand of Legrand North America, Inc; Wiremold : www.legrand.us/#sle.
   3. Panduit Corporation: www.panduit.com
   4. Substitutions: Not permitted.

B. Surface Metal Raceways: Listed and labeled as complying with UL 5.

C. Surface Nonmetallic Raceways: Listed and labeled as complying with UL 5A.

D. Multioutlet Assemblies: Listed and labeled as complying with UL 111.

E. Surface Raceway Systems (Metal and Nonmetallic):
   1. Type, Size, and Length: As indicated on the drawings.
   2. Color: Match adjacent finish, contractor to paint if necessary to match adjacent finish.
   3. Accessory Device Boxes: Suitable for the devices to be installed; color to match raceway.
   4. Integrated Device Provisions:
      a. Receptacles:
         1) Comply with Section 262726.
         2) Configuration: As indicated on the drawings.
         3) Color: As specified in Section 262726.
         4) Spacing: As indicated on the drawings.
      b. Communications Outlets:
         1) Configuration: As indicated on the drawings.
         2) Spacing: As indicated on the drawings.

2.03 WIREWAYS

A. Manufacturers:
   1. Cooper B-Line, a division of Cooper Industries: www.cooperindustries.com/#sle.
   2. Hoffman, a brand of Pentair Technical Products: www.hoffmanonline.com/#sle.
   3. Schneider Electric; Square D Products: www.schneider-electric.us/#sle.
   4. Substitutions: See Section 016000 - Product Requirements.

B. Description: Lay-in wireways and wiring troughs with removable covers; listed and labeled as complying with UL 870.

C. Wireway Type, Unless Otherwise Indicated:
   1. Indoor Clean, Dry Locations: NEMA EN 10250, Type 1, painted steel with hinged cover secured with latches.
   2. Outdoor Locations: NEMA EN 10250, Type 3R, painted steel with screw-cover; include provision for padlocking.

D. Finish for Painted Steel Wireways: Manufacturer's standard grey unless otherwise indicated.

E. Minimum Wireway Size: 2.5 by 2.5 inches unless otherwise indicated.

F. Where wireway size is not indicated, size to comply with NFPA 70 but not less than applicable minimum size requirements specified.

PART 3 EXECUTION

3.01 EXAMINATION

A. Verify that field measurements are as indicated.

B. Verify that outlet boxes and conduit terminations are installed in proper locations and are properly sized in accordance with NFPA 70 to accommodate raceways.

C. Verify that mounting surfaces are ready to receive raceways and that final surface finishes are complete, including painting.

D. Verify that conditions are satisfactory for installation prior to starting work.

3.02 INSTALLATION

A. Install products in accordance with manufacturer's instructions.

B. Perform work in accordance with NECA 1 (general workmanship).

C. Surface Nonmetallic Raceways: Install in accordance with NEMA BI 50061.

D. Install raceways plumb and level.

E. Arrange wireways and associated raceway connections to comply with NFPA 70, including but not limited to requirements for deflected conductors and wireways used as pullboxes. Increase size of wireway where necessary.

F. Secure and support raceways in accordance with Section 260529 at intervals complying with NFPA 70 and manufacturer's requirements.

G. Close unused raceway openings.

H. Provide grounding and bonding in accordance with Section 260526.

I. Identify raceways in accordance with Section 260553.

3.03 FIELD QUALITY CONTROL

A. See Section 014000 - Quality Requirements, for additional requirements.

B. Inspect raceways for damage and defects.

C. Surface Raceway Systems with Integrated Devices: Test each wiring device to verify operation and proper polarity.

D. Correct wiring deficiencies and replace damaged or defective raceways.

3.04 CLEANING

A. Clean exposed surfaces to remove dirt, paint, or other foreign material and restore to match original factory finish.

3.05 PROTECTION

A. Protect installed raceways from subsequent construction operations.

END OF SECTION 260533.23

SECTION 260548
VIBRATION AND SEISMIC CONTROLS FOR ELECTRICAL SYSTEMS

PART 1 GENERAL

1.01 SECTION INCLUDES

A. Vibration isolation requirements.

B. Seismic control requirements.
   1. Includes requirements for seismic qualification of equipment not specified in this section.

C. Vibration-isolated equipment support bases.

D. Vibration isolators.

E. External seismic snubber assemblies.

F. Seismic restraint systems.

1.02 RELATED REQUIREMENTS

A. Section 014533 - Code-Required Special Inspections and Procedures.

B. Section 033000 - Cast-in-Place Concrete.

C. Section 055000 - Metal Fabrications: Materials and requirements for fabricated metal supports.

D. Section 260529 - Hangers and Supports for Electrical Systems.

1.03 DEFINITIONS

A. Electrical Component: Where referenced in this section in regards to seismic controls, applies to any portion of the electrical system subject to seismic evaluation in accordance with applicable codes, including distributed systems (e.g., conduit, cable tray).

B. Seismic Restraint: Structural members or assemblies of members or manufactured elements specifically designed and applied for transmitting seismic forces between components and the seismic force-resisting system of the structure.

1.04 REFERENCE STANDARDS

A. ASCE 7 - Minimum Design Loads and Associated Criteria for Buildings and Other Structures.

B. ASCE 19 - Structural Applications of Steel Cables for Buildings.

C. ASHRAE (HVACA) - ASHRAE Handbook - HVAC Applications.

D. ASTM E580/E580M - Standard Practice for Installation of Ceiling Suspension Systems for Acoustical Tile and Lay-in Panels in Areas Subject to Earthquake Ground Motions.

E. FEMA 413 - Installing Seismic Restraints for Electrical Equipment.

F. FEMA E-74 - Reducing the Risks of Nonstructural Earthquake Damage.

G. ICC (IBC) - International Building Code.

H. ICC-ES AC156 - Acceptance Criteria for Seismic Certification by Shake-Table Testing of Nonstructural Components.

I. MFMA-4 - Metal Framing Standards Publication.

J. NECA 1 - Standard for Good Workmanship in Electrical Construction.

K. NFPA 70 - National Electrical Code.

L. SMACNA (SRM) - Seismic Restraint Manual Guidelines for Mechanical Systems.

1.05 ADMINISTRATIVE REQUIREMENTS

A. Coordination:

1. Coordinate selection and arrangement of vibration isolation and/or seismic control components with the actual equipment to be installed.
2. Coordinate the work with other trades to provide additional framing and materials required for installation.
3. Coordinate compatibility of support and attachment components with mounting surfaces at the installed locations.
4. Seismic Controls:
    a. Coordinate the arrangement of seismic restraints with ductwork, piping, equipment and other potential conflicts installed under other sections or by others.
    b. Coordinate the work with other trades to accommodate relative positioning of essential and nonessential components in consideration of seismic interaction.
5. Notify Architect of any conflicts with or deviations from Contract Documents. Obtain direction before proceeding with work.

B. Sequencing:
1. Do not install products on or provide attachment to concrete surfaces until concrete has fully cured in accordance with Section 033000.

1.06 SUBMITTALS

A. See Section 013000 - Administrative Requirements, for submittal procedures.

B. Design Documents: Prepare and submit all information required for plan review and permitting by authorities having jurisdiction, including but not limited to floor plans, details, and calculations.

C. Product Data: Provide manufacturer's standard catalog pages and data sheets for products, including materials, fabrication details, dimensions, and finishes.
1. Vibration Isolators: Include rated load capacities and deflections; include information on color coding or other identification methods for spring element load capacities.
2. Seismic Controls: Include seismic load capacities.

D. Shop Drawings - Vibration Isolation Systems:
1. Include dimensioned plan views and sections indicating proposed arrangement of vibration isolators; indicate equipment weights and static deflections.
2. Vibration-Isolated Equipment Support Bases: Include base weights, including concrete fill where applicable; indicate equipment mounting provisions.

E. Shop Drawings - Seismic Controls:
1. Include dimensioned plan views and sections indicating proposed electrical component locations and distributed system routing, with locations and details of gravity supports and seismic restraints and associated attachments.
2. Identify mounting conditions required for equipment seismic qualification.
3. Identify anchor manufacturer, type, minimum embedment, minimum spacing, minimum member thickness, and minimum edge distance requirements.
4. Indicate proposed arrangement of distributed system trapeze support groupings.
5. Indicate proposed locations for distributed system flexible fittings and/or connections.
6. Indicate locations of seismic separations where applicable.

F. Seismic Design Data:
1. Compile information on project-specific characteristics of actual installed electrical components necessary for determining seismic design forces required to design appropriate seismic controls, including but not limited to the following.
2. Include structural calculations, stamped or sealed by seismic controls designer, demonstrating suitability of seismic controls for seismic design forces.

G. Evidence of qualifications for seismic controls designer.

H. Evidence of qualifications for manufacturer.

1.07 QUALITY ASSURANCE

A. Comply with NFPA 70.

B. Comply with applicable building code.

C. Seismic Controls Designer Qualifications: Registered professional engineer licensed in the State in which the Project is located and with minimum five years experience designing seismic restraints for nonstructural components.
   1. Designer may be employed by the manufacturer of the seismic restraint products.

D. Manufacturer Qualifications: Company specializing in manufacturing the products specified in this section with minimum three years documented experience.

1.08 DELIVERY, STORAGE, AND HANDLING

A. Receive, inspect, handle, and store products in accordance with manufacturer's instructions.

PART 2 PRODUCTS

2.01 VIBRATION ISOLATION REQUIREMENTS

A. Design and provide vibration isolation systems to reduce vibration transmission to supporting structure from vibration-producing electrical equipment and/or electrical connections to vibration-isolated equipment.

B. Comply with applicable general recommendations of ASHRAE (HVACA), where not in conflict with other specified requirements:

C. General Requirements:
   1. Select vibration isolators to provide required static deflection.
   2. Select vibration isolators for uniform deflection based on distributed operating weight of actual installed equipment.
   3. Select seismic type vibration isolators to comply with seismic design requirements, including conditions of equipment seismic certification where applicable.
   4. Select vibration-isolated equipment support bases and associated vibration isolators to provide minimum 2-inch operating clearance beneath base unless otherwise indicated.

D. Equipment Isolation:
   1. Transformers:
      a. Specified vibration isolators are in addition to any factory-installed internal core and coil assembly vibration isolators unless otherwise indicated.
      b. Floor-Mounted Transformers, Nonseismic Applications: Use resilent material isolator pads, resilient material isolator mounts, or open (unhoused) spring isolators.
      c. Floor-Mounted Transformers, Seismic Applications: Use seismic type resilient material isolator mounts or seismic type restrained spring isolators.
      d. Suspended Transformers, Nonseismic Applications: Use resilient material isolator hangers, spring isolator hangers, or combination resilient material/spring isolator hangers.
      e. Suspended Transformers, Seismic Applications: Use seismic type resilient material isolator hangers, seismic type spring isolator hangers, or seismic type combination resilient material/spring isolator hangers.
      f. Wall-Mounted Transformers, Nonseismic Applications: Use resilient material isolator mounts.
      g. Wall-Mounted Transformers, Seismic Applications: Use seismic type resilient material isolator mounts.
      h. Minimum Static Deflection:
         1) Transformers Mounted on Grade-Level Slabs: 0.25 inch deflection unless otherwise indicated.
         2) Transformers Mounted at Above-Grade Levels: 0.5 inch deflection unless otherwise indicated.

E. Conduit Isolation:
   1. Use flexible conduit or cable for electrical connections to vibration-isolated equipment, including equipment installed under other sections or by others.
   2. Vibration Isolators:
      a. Provide vibration isolators for conduit supports:
         1) Located within 50 feet of connected vibration-isolated equipment where flexible connection to equipment is not possible.
         2) For conduits over 2 inch trade size located below or within 50 feet of noise-sensitive areas indicated.
      b. Minimum Static Deflection:
         1) First Three Supports Closest to Isolated Equipment: Same as static deflection of equipment; maximum of 2 inch deflection required.
         2) Remainder of Supports: 0.75 inch deflection unless otherwise indicated.
      c. Suspended Conduits, Nonseismic Applications: Use resilient material isolator hangers, spring isolator hangers, or combination resilient material/spring isolator hangers.
      d. Suspended Conduits, Seismic Applications: Use seismic type resilient material isolator hangers, seismic type spring isolator hangers, or seismic type combination resilient material/spring isolator hangers.
      e. Use modular seal or approved resilient material where vibration-isolated conduits penetrate building elements (e.g., walls, floors) arranged to prevent vibration transmission to structure.

2.02 SEISMIC CONTROL REQUIREMENTS

A. Design and provide electrical component restraints, supports, and attachments suitable for seismic loads determined in accordance with applicable codes, as well as gravity and operating loads and other structural design considerations of the installed location. Consider wind loads for outdoor electrical components.

B. Seismic Design Criteria: ICC (IBC).
   1. Seismic Design Category: D.
   2. Risk Category: 3.

C. Component Importance Factor (Ip): Electrical components to be assigned a component importance factor (Ip) of 1.5 unless otherwise indicated.

D. Seismic Qualification of Equipment:
   1. Provide special certification for electrical equipment furnished under other sections and assigned a component importance factor (Ip) of 1.5, certifying that equipment will remain operable following a design level earthquake.
   2. Seismic qualification to be by shake table testing in accordance with recognized testing standard procedure, such as ICC-ES AC156, acceptable to authorities having jurisdiction.
   3. Notify Architect and obtain direction where mounting restrictions required by conditions of seismic certification conflict with specified requirements.
   4. Seismically qualified equipment to be furnished with factory-installed labels referencing certificate of compliance and associated mounting restrictions.

E. Seismic Restraints:
   1. Provide seismic restraints for electrical components except where exempt according to applicable codes and specified seismic design criteria, as approved by authorities having jurisdiction.
   2. Seismic Restraint Exemptions:
      a. Exemptions for Seismic Design Category D, E, and F:
         1) Electrical components with component importance factor (Ip) of 1.0 where all of the following apply:
            (a) The component is positively attached to the structure.

(b) Flexible connections are provided between the component and associated ductwork, piping, and conduit.
(c) Either:
(1) The component weighs 400 pounds or less and has a center of mass located 4 feet or less above the adjacent floor level.
(2) The component weighs 20 pounds or less or, in the case of a distributed system, 5 pounds per foot or less.

b. Raceway Exemptions, All Seismic Design Categories:
1) Conduits less than 2-1/2 inch trade size.
2) Trapeze supported raceways weighing less than 10 pounds per foot.
3) Hanger supported raceways where each hanger in the raceway run is 12 inches or less in length from the raceway support to the supporting structure; rod hangers, where used, to be equipped with swivels.

c. Lighting Exemptions, All Seismic Design Categories:
1) Suspended luminaires where attachments are designed to accommodate 1.4 times the operating weight acting in both the vertical and horizontal directions and connections to structure allow for 360 degree range of motion in the horizontal plane; arrange to prevent impact between luminaires and the structure or other nonstructural components.
2) Lay-in luminaires weighing less than 56 pounds secured to ceiling grid and provided with safety wires in accordance with ASTM E580/E580M.

3. Comply with applicable general recommendations of the following, where not in conflict with applicable codes, seismic design criteria, or other specified requirements:
a. ASHRAE (HVACA).
b. FEMA 413.
c. FEMA E-74.
d. SMACNA (SRM).

4. Seismic restraint capacities to be verified by a Nationally Recognized Testing Laboratory (NRTL) or certified by an independent third-party registered professional engineer acceptable to authorities having jurisdiction.

5. Seismic Type Vibration Isolators:
a. Comply with seismic design requirements, including conditions of equipment seismic certification where applicable.

6. External Seismic Snubber Assemblies:
a. Provide quantity and arrangement of external seismic snubber assemblies as required to restrain equipment in all directions (both lateral and vertical).
b. Do not use external seismic snubber assemblies that restrain equipment only in one or more lateral directions (but not vertical) except where uplift forces are zero or are addressed by other restraints.

7. Seismic Restraint Systems:
a. Except where otherwise restricted, use of either cable or rigid restraints is permitted.
b. Use only cable restraints to restrain vibration-isolated electrical components, including distributed systems.
c. Use only one restraint system type for a given electrical component or distributed system (e.g., conduit, cable tray) run; mixing of cable and rigid restraints on a given component/run is not permitted.
d. Size restraint elements, including anchorage, to resist seismic loads as necessary to restrain electrical component in all lateral directions; consider bracket geometry in anchor load calculations.
e. Use rod stiffener clips to attach bracing to hanger rods as required to prevent rod buckling from vertical (upward) compressive load introduced by cable or rigid restraints loaded in tension, in excess of downward tensile load due to supported electrical component weight.

f. Select hanger rods and associated anchorage as required to accommodate vertical (downward) tensile load introduced by rigid restraints loaded in compression, in addition to downward tensile load due to supported electrical component weight.
g. Clevis hangers may only be used for attachment of transverse restraints; do not use for attachment of longitudinal restraints.
h. Where seismic restraints are attached to clevis hangers, provide clevis bolt reinforcement accessory to prevent clevis hanger deformation.
i. Do not introduce lateral loads on open bar joist chords or the weak axis of beams, or loads in any direction at other than panel points unless approved by project Structural Engineer of Record.

F. Seismic Attachments:
1. Attachments to be bolted, welded, or otherwise positively fastened without consideration of frictional resistance produced by the effects of gravity.
2. Post-Installed Concrete and Masonry Anchors: Evaluated and recognized by ICC Evaluation Service, LLC (ICC-ES) or qualified evaluation service acceptable to authorities having jurisdiction for compliance with applicable building code, and qualified for seismic applications; concrete anchors to be qualified for installation in both cracked and uncracked concrete.
3. Do not use power-actuated fasteners.
4. Do not use friction clips (devices that rely on mechanically applied friction to resist loads). Beam clamps may be used for supporting sustained loads where provided with restraining straps.
5. Comply with anchor minimum embedment, minimum spacing, minimum member thickness, and minimum edge distance requirements.
6. Concrete Housekeeping Pads:
a. Increase size of pad as required to comply with anchor requirements.
b. Provide pad reinforcement and doweling to ensure integrity of pad and connection and to provide adequate load path from pad to supporting structure.

G. Seismic Interactions:
1. Include provisions to prevent seismic impact between electrical components and other structural or nonstructural components.
2. Include provisions such that failure of a component, either essential or nonessential, does not cause the failure of an essential component.

H. Seismic Relative Displacement Provisions:
1. Use suitable fittings or flexible connections to accommodate:
a. Relative displacements at connections between components, including distributed systems (e.g., conduit, cable tray); do not exceed load limits for equipment utility connections.
b. Relative displacements between component supports attached to dissimilar parts of structure that may move differently during an earthquake.
c. Design displacements at seismic separations.
d. Anticipated drifts between floors.

2.03 VIBRATION-ISOLATED EQUIPMENT SUPPORT BASES

A. Manufacturers:
1. Vibration-Isolated Equipment Support Bases:
a. Kinetics Noise Control, Inc: www.kineticsnoise.com/#sle.
b. Mason Industries: www.mason-ind.com/#sle.
c. Vibration Eliminator Company, Inc: www.veco-nyc.com/#sle.
2. Substitutions: See Section 016000 - Product Requirements.

3. Source Limitations: Furnish vibration-isolated equipment support bases and associated components and accessories produced by the same manufacturer as the vibration isolators and obtained from a single supplier.

B. Vibration-Isolated Structural Steel Bases:
   1. Description: Engineered structural steel frames with integral mounting provisions for vibration isolators, sized and configured for mounting of equipment.

C. Vibration-Isolated Concrete Inertia Bases:
   1. Description: Concrete-filled engineered steel forms with integral mounting provisions for vibration isolators, sized and configured for mounting of equipment.
   2. Minimum Base Depth: 6 inches.
   3. Minimum Base Mass (Including Concrete): 1.5 times weight of supported equipment.
   4. Concrete Reinforcement: Welded or tied reinforcing bars running both ways in a single layer.
   5. Concrete: Filled on site with minimum 3000 psi concrete in accordance with Section 033000.

2.04 VIBRATION ISOLATORS

A. Manufacturers:
   1. Vibration Isolators:
      a. Kinetics Noise Control, Inc: www.kineticsnoise.com/#sle.
      b. Mason Industries: www.mason-ind.com/#sle.
      c. Vibration Eliminator Company, Inc: www.veco-nyc.com/#sle.
   2. Substitutions: See Section 016000 - Product Requirements.
   3. Source Limitations: Furnish vibration-isolators and associated accessories produced by a single manufacturer and obtained from a single supplier.

B. General Requirements:
   1. Resilient Materials for Vibration Isolators: Oil, ozone, and oxidant resistant.
   2. Spring Elements for Spring Isolators:
      a. Color code or otherwise identify springs to indicate load capacity.
      b. Lateral Stability: Minimum lateral stiffness to vertical stiffness ratio of 0.8.
      c. Designed to operate in the linear portion of their load versus deflection curve over deflection range of not less than 50 percent above specified deflection.
      d. Designed to provide additional travel to solid of not less than 50 percent of rated deflection at rated load.
      e. Selected to provide designed deflection of not less than 75 percent of specified deflection.
      f. Selected to function without undue stress or overloading.
   3. Seismic Snubbing Elements for Seismic Isolators:
      a. Air Gap: Between 0.125 inches and 0.25 inches unless otherwise indicated.
      b. Points of Contact: Cushioned with resilient material, minimum 0.25 inch thick; capable of being visually inspected for damage and replaced.

C. Vibration Isolators for Nonseismic Applications:
   1. Resilient Material Isolator Pads:
      a. Description: Single or multiple layer pads utilizing elastomeric (e.g., neoprene, rubber) or fiberglass isolator material.
      b. Pad Thickness: As required for specified minimum static deflection; minimum 0.25 inch thickness.
      c. Multiple Layer Pads: Provide bonded, galvanized sheet metal separation plate between each layer.
   2. Resilient Material Isolator Mounts, Nonseismic:

a. Description: Mounting assemblies for bolting equipment to supporting structure utilizing elastomeric (e.g., neoprene, rubber) or fiberglass isolator material; fail-safe type.

3. Open (Unhoused) Spring Isolators:
   a. Description: Isolator assembly consisting of single or multiple free-standing, laterally stable steel spring(s) without a housing.
   b. Bottom Load Plate: Nonskid, molded, elastomeric isolator material or steel with nonskid elastomeric isolator pad with provisions for bolting to supporting structure as required.
   c. Furnished with integral leveling device for positioning and securing supported equipment.
4. Housed Spring Isolators:
   a. Description: Isolator assembly consisting of single or multiple free-standing, laterally stable steel spring(s) within a metal housing.
   b. Furnished with integral elastomeric snubbing elements, nonadjustable type, for limiting equipment movement and preventing metal-to-metal contact between housing elements.
   c. Bottom Load Plate: Steel with nonskid, elastomeric isolator pad with provisions for bolting to supporting structure as required.
   d. Furnished with integral leveling device for positioning and securing supported equipment.
5. Resilient Material Isolator Hangers, Nonseismic:
   a. Description: Isolator assembly designed for installation in hanger rod suspension system utilizing elastomeric (e.g., neoprene, rubber) or fiberglass isolator material for the lower hanger rod connection.
6. Spring Isolator Hangers, Nonseismic:
   a. Description: Isolator assembly designed for installation in hanger rod suspension system utilizing single or multiple free-standing, laterally stable steel spring(s) in series with an elastomeric element for the lower hanger rod connection.
   b. Designed to accommodate misalignment of bottom hanger rod up to 30 degrees (plus/minus 15 degrees) without short-circuiting of isolation.
7. Combination Resilient Material/Spring Isolator Hangers, Nonseismic:
   a. Description: Isolator assembly designed for installation in hanger rod suspension system utilizing single or multiple free-standing, laterally stable steel spring(s) for the lower hanger rod connection and elastomeric (e.g., neoprene, rubber) or fiberglass isolator material for the upper hanger rod connection.
   b. Designed to accommodate misalignment of bottom hanger rod up to 30 degrees (plus/minus 15 degrees) without short-circuiting of isolation.

D. Vibration Isolators for Seismic Applications:
1. Resilient Material Isolator Mounts, Seismic:
   a. Description: Mounting assemblies for bolting equipment to supporting structure utilizing elastomeric (e.g., neoprene, rubber) isolator material; specifically designed and rated for seismic applications with integral snubbing in all directions.
2. Restrained Spring Isolators, Seismic:
   a. Description: Isolator assembly consisting of single or multiple free-standing, laterally stable steel spring(s) in series with elastomeric (e.g., neoprene, rubber) isolator material within a metal housing designed to prevent movement of supported equipment above an adjustable vertical limit stop; specifically designed and rated for seismic applications with integral snubbing in all directions.
   b. Bottom Load Plate: Steel with provisions for bolting to supporting structure as required.
   c. Furnished with integral leveling device for positioning and securing supported equipment.

d. Provides constant free and operating height.

3. Resilient Material Isolator Hangers, Seismic:
   a. Description: Isolator assembly designed for installation in hanger rod suspension system utilizing elastomeric (e.g., neoprene, rubber) isolator material for the lower hanger rod connection; specifically designed and rated for seismic applications with vertical limit stop to prevent upward travel of hanger rod and cushion impact.
4. Spring Isolator Hangers, Seismic:
   a. Description: Isolator assembly designed for installation in hanger rod suspension system utilizing single or multiple free-standing, laterally stable steel spring(s) in series with an elastomeric element for the lower hanger rod connection; specifically designed and rated for seismic applications with vertical limit stop to prevent upward travel of hanger rod and cushion impact.
   b. Designed to accommodate misalignment of bottom hanger rod up to 30 degrees (plus/minus 15 degrees) without short-circuiting of isolation.
5. Combination Resilient Material/Spring Isolator Hangers, Seismic:
   a. Description: Isolator assembly designed for installation in hanger rod suspension system utilizing single or multiple free-standing, laterally stable steel spring(s) for the lower hanger rod connection and elastomeric (e.g., neoprene, rubber) isolator material for the upper hanger rod connection; specifically designed and rated for seismic applications with vertical limit stop to prevent upward travel of hanger rod and cushion impact.
   b. Designed to accommodate misalignment of bottom hanger rod up to 30 degrees (plus/minus 15 degrees) without short-circuiting of isolation.

2.05 EXTERNAL SEISMIC SNUBBER ASSEMBLIES

A. Manufacturers:
   1. External Seismic Snubber Assemblies:
      a. Kinetics Noise Control, Inc: www.kineticsnoise.com/#sle.
      b. Mason Industries: www.mason-ind.com/#sle.
      c. Vibration Eliminator Company, Inc: www.veco-nyc.com/#sle.
   2. Substitutions: See Section 016000 - Product Requirements.
   3. Source Limitations: Furnish external seismic snubber assemblies and associated accessories produced by the same manufacturer as the vibration isolators and obtained from a single supplier.

B. Description: Steel snubbing assemblies designed for external attachment to both equipment and supporting structure that, as part of a complete system, restrain equipment motion in all directions during a seismic event while maintaining vibration isolation during normal operation.

C. Seismic Snubbing Elements:
   1. Air Gap: Between 0.125 inches and 0.25 inches unless otherwise indicated.
   2. Points of Contact: Cushioned with resilient material, minimum 0.25 inch thick; capable of being visually inspected for damage and replaced.

2.06 SEISMIC RESTRAINT SYSTEMS

A. Manufacturers:
   1. Seismic Restraint Systems:
      a. AFCON, a brand of Anvil International: www.anvilintl.com/#sle.
      b. Eaton Corporation: www.eaton.com/#sle.
      c. Kinetics Noise Control, Inc: www.kineticsnoise.com/#sle.
      d. Mason Industries: www.mason-ind.com/#sle.
   2. Substitutions: See Section 016000 - Product Requirements.
   3. Source Limitations: Furnish seismic restraint system components and accessories produced by a single manufacturer and obtained from a single supplier.

B. Description: System components and accessories specifically designed for field assembly and attachment of seismic restraints.

C. Cable Restraints:
   1. Comply with ASCE 19.
   2. Cables: Pre-stretched, galvanized steel wire rope with certified break strength.
   3. Cable Connections: Use only swaged end fittings. Cable clips and wedge type end fittings are not permitted in accordance with ASCE 19.
   4. Use protective thimbles for cable loops where potential for cable damage exists.

D. Rigid Restraints: Use MFMA-4 steel channel (strut), steel angle, or steel pipe for structural element; suitable for both compressive and tensile design loads.

PART 3 EXECUTION

3.01 EXAMINATION

A. Verify that field measurements are as shown on the drawings.

B. Verify that mounting surfaces are ready to receive vibration isolation and/or seismic control components and associated attachments.

C. Verify that conditions are satisfactory for installation prior to starting work.

3.02 CODE-REQUIRED SPECIAL INSPECTIONS

A. Arrange work to accommodate tests and/or inspections performed by Special Inspection Agency employed by Owner or Architect in accordance with Section 014533 and statement of special inspections as required by applicable building code.

B. Frequency of Special Inspections: Where special inspections are designated as continuous or periodic, arrange work accordingly.
   1. Continuous Special Inspections: Special Inspection Agency to be present in the area where the work is being performed and observe the work at all times the work is in progress.
   2. Periodic Special Inspections: Special Inspection Agency to be present in the area where work is being performed and observe the work part-time or intermittently and at the completion of the work.

C. Seismic special inspections include, but are not limited to:
   1. Seismically Qualified Equipment: Verification that label, anchorage, and mounting comply with certificate of compliance.

D. Prior to starting work, Contractor to submit written statement of responsibility to authorities having jurisdiction and to Owner acknowledging awareness of special requirements contained in the statement of special inspections.

E. Special Inspection Agency services do not relieve Contractor from performing inspections and testing specified elsewhere.

3.03 INSTALLATION

A. Install products in accordance with manufacturer's instructions.

B. Install products in accordance with applicable requirements of NECA 1 (general workmanship).

C. Install anchors and fasteners in accordance with ICC Evaluation Services, LLC (ICC-ES) evaluation report conditions of use where applicable.

D. Secure fasteners according to manufacturer's recommended torque settings.

E. Install flexible conduit and cable connections to provide sufficient slack for vibration isolation and/or seismic relative displacements as indicated or as required.

F. Vibration Isolation Systems:
   1. Vibration-Isolated Equipment Support Bases:

a. Provide specified minimum clearance beneath base.

2. Spring Isolators:
   a. Position equipment at operating height; provide temporary blocking as required.
   b. Lift equipment free of isolators prior to lateral repositioning to avoid damage to isolators.
   c. Level equipment by adjusting isolators gradually in sequence to raise equipment uniformly such that excessive weight or stress is not placed on any single isolator.
3. Isolator Hangers:
   a. Use precompressed isolator hangers where required to facilitate installation and prevent damage to equipment utility connection provisions.
   b. Locate isolator hangers at top of hanger rods in accordance with manufacturer's instructions.
4. Clean debris from beneath vibration-isolated equipment that could cause short-circuiting of isolation.
5. Use elastomeric grommets for attachments where required to prevent short-circuiting of isolation.
6. Adjust isolators to be free of isolation short circuits during normal operation.
7. Do not overtighten fasteners such that resilient material isolator pads are compressed beyond manufacturer's maximum recommended deflection.

G. Seismic Controls:
1. Provide specified snubbing element air gap; remove any factory-installed spacers, debris or other obstructions.
2. Use only specified components, anchorage, and hardware evaluated by seismic design. Comply with conditions of seismic certification where applicable.
3. Where mounting hole diameter exceeds bolt diameter by more than 0.125 inch, use epoxy grout, elastomeric grommet, or welded washer to reduce clearance to 0.125 inch or less.
4. Equipment with Sheet Metal Housings:
   a. Use Belleville washers to distribute stress over a larger surface area of the sheet metal connection interface as approved by manufacturer.
   b. Attach additional steel as approved by manufacturer where required to transfer loads to structure.
   c. Where mounting surface is irregular, do not shim housing; reinforce housing with additional steel as approved by manufacturer.
5. Concrete Housekeeping Pads:
   a. Size in accordance with seismic design to meet anchor requirements.
   b. Install pad reinforcement and doweling in accordance with seismic design to ensure integrity of pad and associated connection to slab.
6. Seismic Restraint Systems:
   a. Do not attach seismic restraints and gravity supports to dissimilar parts of structure that may move differently during an earthquake.
   b. Install restraints within permissible angles in accordance with seismic design.
   c. Install cable restraints straight between component/run and structural attachment; do not bend around other nonstructural components or structural elements.
   d. Install cable restraints for vibration-isolated components slightly slack to prevent short-circuiting of isolation.
   e. Install hanger rod stiffeners where indicated using only specified clamps; do not weld stiffeners to hanger rod.

3.04 FIELD QUALITY CONTROL

A. See Section 014000 - Quality Requirements, for additional requirements.

B. Inspect vibration isolation and/or seismic control components for damage and defects.

C. Vibration Isolation Systems:

1. Verify isolator static deflections.
2. Verify required clearance beneath vibration-isolated equipment support bases.
3. Verify vibration isolation performance during normal operation; investigate sources of isolation short circuits.

D. Seismic Controls:
   1. Verify snubbing element air gaps.

E. Correct deficiencies and replace damaged or defective vibration isolation and/or seismic control components.

END OF SECTION 260548

SECTION 260553
IDENTIFICATION FOR ELECTRICAL SYSTEMS

PART 1 GENERAL

1.01 SECTION INCLUDES

A. Electrical identification requirements.

B. Identification nameplates and labels.

C. Wire and cable markers.

D. Voltage markers.

E. Warning signs and labels.

1.02 RELATED REQUIREMENTS

A. Section 260519 - Low-Voltage Electrical Power Conductors and Cables: Color coding for power conductors and cables 600 V and less; vinyl color coding electrical tape.

1.03 REFERENCE STANDARDS

A. ANSI Z535.2 - American National Standard for Environmental and Facility Safety Signs.

B. ANSI Z535.4 - American National Standard for Product Safety Signs and Labels.

C. NFPA 70 - National Electrical Code.

D. NFPA 70E - Standard for Electrical Safety in the Workplace.

E. UL 969 - Marking and Labeling Systems.

1.04 ADMINISTRATIVE REQUIREMENTS

A. Coordination:
   1. Verify final designations for equipment, systems, and components to be identified prior to fabrication of identification products.

B. Sequencing:
   1. Do not conceal items to be identified, in locations such as above suspended ceilings, until identification products have been installed.
   2. Do not install identification products until final surface finishes and painting are complete.

1.05 SUBMITTALS

A. No submittals required.

1.06 QUALITY ASSURANCE

A. Comply with requirements of NFPA 70.

1.07 FIELD CONDITIONS

A. Do not install adhesive products when ambient temperature is lower than recommended by manufacturer.

PART 2 PRODUCTS

2.01 IDENTIFICATION REQUIREMENTS

A. Identification for Equipment:
   1. Use lamicoid/phenolic identification nameplate to identify each piece of electrical distribution and control equipment and associated sections, compartments, and components.
      a. Panelboards:
         1) Identify unique Parkway School District asset code with equipment number.
         2) Identify ampere rating.
         3) Identify voltage and phase.
         4) Identify power source and circuit number.

5) Identify main overcurrent protective device. Use identification label for panelboards with a door. For power distribution panelboards without a door, use identification nameplate.
6) Use typewritten circuit directory to identify load(s) served for panelboards with a door. Identify spares and spaces using pencil.
7) For power panelboards without a door, use identification nameplate to identify load(s) served for each branch device. Do not identify spares and spaces.

b. Transformers:
1) Identify unique Parkway School District asset code with equipment number.
2) Identify kVA rating.
3) Identify voltage and phase for primary and secondary.
4) Identify power source and circuit number.
5) Identify load(s) served.

2. Use identification labels to identify each piece of electrical distribution and control equipment.
a. Enclosed remote located switches, circuit breakers, and motor controllers:
1) Identify voltage and phase.
2) Identify power source and circuit number.
3) Identify load(s) served.
b. Time Switches:
1) Identify load(s) served and associated circuits controlled. Include location.
c. Enclosed Contactors:
1) Identify ampere rating.
2) Identify voltage and phase.
3) Identify coil voltage.
4) Identify load(s) and associated circuits controlled.

3. Emergency System Equipment:
a. Use identification nameplate to identify emergency system equipment in accordance with NFPA 70.
b. Use identification nameplate at each piece of service equipment to identify type and location of on-site emergency power sources.

4. Use identification label to identify switchboards and panelboards utilizing a high leg delta system in accordance with NFPA 70.
5. Use identification label to identify disconnect location for equipment with remote disconnecting means.
6. Use identification label on inside of door at each fused switch to identify required NEMA fuse class and size.
7. Use identification label on inside of door at each motor controller to identify nameplate horsepower, full load amperes, code letter, service factor, voltage, and phase of motor(s) controlled.
8. Use identification label to identify overcurrent protective devices for branch circuits serving fire alarm circuits. Identify with text "FIRE ALARM CIRCUIT".
9. Available Fault Current Documentation: Use identification label to identify the available fault current and date calculations were performed at locations requiring documentation by NFPA 70 including but not limited to the following.
a. Service equipment.
b. Industrial control panels.
c. Motor control centers.
d. Elevator control panels.
e. Industrial machinery.

10. Arc Flash Hazard Warning Labels: Use warning labels to identify arc flash hazards for electrical equipment, such as switchboards, panelboards, industrial control panels, meter socket enclosures, and motor control centers that are likely to require examination, adjustment, servicing, or maintenance while energized.
    a. Minimum Size: 5 by 7 inches.
    b. Legend: Include orange header that reads "WARNING", followed by the word message "Arc Flash and Shock Hazard; Appropriate PPE Required; Do not operate controls or open covers without appropriate personal protection equipment; Failure to comply may result in injury or death; Refer to NFPA 70E for minimum PPE requirements" or approved equivalent.
11. Use warning signs to identify electrical hazardsat electrical room or area entrances with the word message "DANGER; Electrical hazard; Authorized personnel only" or approved equivalent.

B. Identification for Conductors and Cables:
1. Color Coding for Power Conductors 600 V and Less: Comply with Section 260519.
2. Use identification label to identify color code for ungrounded and grounded power conductors at each piece of feeder or branch-circuit distribution equipment.
3. Use wire and cable markers to identify circuit number or other designation indicated for power, control, and instrumentation conductors and cables at the following locations:
    a. At each source and load connection.
    b. Within boxes when more than one circuit is present.
    c. Within equipment enclosures when conductors and cables enter or leave the enclosure.
4. Use underground warning tape to identify direct buried cables.

C. Identification for Raceways:
1. Use voltage markers to identify highest voltage present for accessible conduits at maximum intervals of 20 feet.
2. Use voltage markers, color-coded bands, or factory-painted conduits to identify systems other than normal power system for accessible conduits.
    a. Maximum Intervals: 20 feet.
    b. Color-Coded Bands: Use vinyl color coding electrical tape to mark bands 3 inches wide.
        1) Color Code:
            (a) Fire Alarm System: Red.
            (b) Telephone System: White.
            (c) HVAC Control System: Green.
            (d) PA System: Grey.
            (e) Cat5e Data System: Blue.
            (f) Cat6 Data System: Violet.
            (g) Security System: White.
            (h) CCTV System: Yellow
        2) Vinyl Color Coding Electrical Tape: Comply with Section 260519.
    c. Color Code:
3. Use toneable underground warning tape to identify underground raceways.
4. Use voltage markers to identify highest voltage present for wireways at maximum intervals of 20 feet.

D. Identification for Boxes and Enclosures larger than 100 cubic inches:
1. Use voltage markers to identify highest voltage present in power and lighting systems.
2. Use color coded vinyl labels with printed system name to identify specified systems.
    a. Vinyl Tape Color Code:
        1) Fire Alarm System: Red.
        2) Telephone System: White.

3) HVAC Control System: Green.
4) PA System: Grey.
5) Data System: Blue.
6) Security System: White.
7) CCTV System: Yellow

3. Use warning labels to identify electrical hazards with the word message "DANGER; HIGH VOLTAGE; KEEP OUT".

E. Identification for Devices:
1. Use identification label to identify fire alarm system device number.
a. For fire alarm devices concealed above suspended ceilings, provide identification labeling on a white, standard size, single-gang, LED indicator cover plate flush mounted to ceiling tile below device location. Install a standard, signle-gang switch box in the ceiling to attach blank cover plate.
2. Use identification label to identify serving branch circuit for all receptacles.
a. For receptacles in public areas, provide identification on inside surface of wallplate.

F. Identification for Luminaires:
1. Use permanent red dot on luminaire frame to identify luminaires connected to emergency power system.

2.02 IDENTIFICATION NAMEPLATES AND LABELS

A. Identification Nameplates:
1. Materials:
a. Indoor Clean, Dry Locations: Use plastic nameplates.
b. Outdoor Locations: Use plastic nameplates suitable for exterior use.
2. Plastic Nameplates: Two-layer or three-layer laminated electrically non-conductive phenolic with beveled edges; minimum thickness of 1/8 inch; engraved text.
a. Minimum Text Size: 1/2 inch
3. Mounting Holes for Mechanical Fasteners: Two, centered on sides for sizes up to 1 inch high; Four, located at corners for larger sizes.

B. Identification Labels:
1. Manufacturers:
a. Brady Corporation: www.bradyid.com.
b. Brother International Corporation: www.brother-usa.com/#sle.
c. Panduit Corp: www.panduit.com/#sle.
d. Substitutions: See Section 016000 - Product Requirements.
2. Materials: Use self-adhesive laminated plastic labels; UV, chemical, water, heat, and abrasion resistant.
a. Use only for indoor locations.
3. Text: Use machine-printed text. Do not use handwritten text.

C. Format for Receptacle Identification:
1. Legend: Power source and circuit number or other designation indicated.
2. Text: All capitalized.
3. Minimum Text Height: 3/16 inch.
4. Color: Black text on clear background.

D. Format for Fire Alarm Device Identification:
1. Legend: Fire Alarm Device ID indicated on drawings.
2. Text: All capitalized unless otherwise indicated.
3. Minimum Text Height: 3/16 inch.
4. Color: Red text on white background.

2.03 WIRE AND CABLE MARKERS

A. Manufacturers:

1. Brady Corporation: www.bradyid.com.
2. HellermannTyton: www.hellermanntyton.com/#sle.
3. Panduit Corp: www.panduit.com/#sle.
4. Substitutions: See Section 016000 - Product Requirements.

B. Markers for Conductors and Cables: Use wrap-around self-adhesive vinyl self-laminating type markers suitable for the conductor or cable to be identified.

C. Markers for Conductor and Cable Bundles: Use plastic marker tags secured by nylon cable ties.

D. Legend: Power source and circuit number or other designation indicated.

E. Text: Use machine-printed text, all capitalized unless otherwise indicated.
1. Do not use handwritten text.

F. Minimum Text Height: 1/8 inch.

G. Color: Black text on white background unless otherwise indicated.

2.04 VOLTAGE MARKERS

A. Manufacturers:
1. Brady Corporation: www.bradyid.com.
2. Substitutions: See Section 016000 - Product Requirements.

B. Markers for Conduits: Use factory pre-printed self-adhesive vinyl type markers.

C. Markers for Boxes and Equipment Enclosures: Use factory pre-printed self-adhesive vinyl type markers.

D. Minimum Size:
1. Markers for Equipment: 1 1/8 by 4 1/2 inches.
2. Markers for Conduits: As recommended by manufacturer for conduit size to be identified.
3. Markers for Pull Boxes: 1 1/8 by 4 1/2 inches.
4. Markers for Junction Boxes: 1/2 by 2 1/4 inches.

E. Legend:
1. Markers for Voltage Identification: Highest voltage present.

F. Color: Black text on orange background.

2.05 WARNING SIGNS AND LABELS

A. Comply with ANSI Z535.2 or ANSI Z535.4 as applicable.

B. Warning Signs:
1. Materials:
a. Indoor Dry, Clean Locations: Use factory pre-printed rigid plastic or self-adhesive vinyl signs.
b. Outdoor Locations: Use factory pre-printed rigid plastic or self-adhesive vinyl signs.
2. Rigid Signs: Provide four mounting holes at corners for mechanical fasteners.
3. Minimum Size: 7 by 10 inches unless otherwise indicated.

C. Warning Labels:
1. Materials: Use factory pre-printed or machine-printed self-adhesive polyester or self-adhesive vinyl labels; UV, chemical, water, heat, and abrasion resistant; produced using materials recognized to UL 969.
a. Do not use labels designed to be completed using handwritten text.
2. Machine-Printed Labels: Use thermal transfer process printing machines and accessories recommended by label manufacturer.
3. Minimum Size: 2 by 4 inches.

PART 3 EXECUTION

3.01 PREPARATION

A. Clean surfaces to receive adhesive products according to manufacturer's instructions.

3.02 INSTALLATION

A. Install products in accordance with manufacturer's instructions.

B. Install identification products to be plainly visible for examination, adjustment, servicing, and maintenance. Locate products as follows:
   1. Surface-Mounted Equipment: Enclosure front.
   2. Flush-Mounted Equipment: Enclosure front.
   3. Free-Standing Equipment: Enclosure front; also enclosure rear for equipment with rear access.
   4. Elevated Equipment: Legible from the floor or working platform.
   5. Interior Components: Legible from the point of access.
   6. Conduits: Legible from the floor.
   7. Conductors and Cables: Legible from the point of access.
   8. Devices: Outside face of cover.

C. Install identification products centered, level, and parallel with lines of item being identified.

D. Secure nameplates to exterior surfaces of enclosures using stainless steel screws, rivets, self-adhesive backing, or epoxy cement and to interior surfaces using self-adhesive backing or epoxy cement.

E. Install self-adhesive labels and markers to achieve maximum adhesion, with no bubbles or wrinkles and edges properly sealed.

F. Secure rigid signs using stainless steel screws.

3.03 FIELD QUALITY CONTROL

A. See Section 014000 - Quality Requirements, for additional requirements.

B. Replace self-adhesive labels and markers that exhibit bubbles, wrinkles, curling or other signs of improper adhesion.

END OF SECTION 260553

SECTION 260583
WIRING CONNECTIONS

PART 1 GENERAL

1.01 SECTION INCLUDES

A. Electrical connections to equipment.

1.02 RELATED REQUIREMENTS

A. Section 260519 - Low-Voltage Electrical Power Conductors and Cables.

B. Section 260533.13 - Conduit for Electrical Systems.

C. Section 260533.16 - Boxes for Electrical Systems.

D. Section 262726 - Wiring Devices.

E. Section 262816.16 - Enclosed Switches.

F. Section 262913 - Enclosed Controllers.

1.03 REFERENCE STANDARDS

A. NEMA WD 1 - General Color Requirements for Wiring Devices.

B. NEMA WD 6 - Wiring Devices - Dimensional Specifications.

C. NFPA 70 - National Electrical Code.

1.04 ADMINISTRATIVE REQUIREMENTS

A. Coordination:
   1. Obtain and review shop drawings, product data, manufacturer's wiring diagrams, and manufacturer's instructions for equipment furnished under other sections.
   2. Determine connection locations and requirements.

B. Sequencing:
   1. Install rough-in of electrical connections before installation of equipment is required.
   2. Make electrical connections before required start-up of equipment.

1.05 SUBMITTALS

A. See Section 013000 - Administrative Requirements, for submittal procedures.

1.06 QUALITY ASSURANCE

A. Comply with requirements of NFPA 70.

PART 2 PRODUCTS

2.01 MATERIALS

A. Disconnect Switches: As specified in Section 262816.16 and in individual equipment sections.

B. Wiring Devices: As specified in Section 262726.

C. Flexible Conduit: As specified in Section 260533.13.

D. Boxes: As specified in Section 260533.16.

PART 3 EXECUTION

3.01 EXAMINATION

A. Verify that equipment is ready for electrical connection, wiring, and energization.

3.02 ELECTRICAL CONNECTIONS

A. Make electrical connections in accordance with equipment manufacturer's instructions.

B. Make conduit connections to equipment using flexible conduit. Use liquidtight flexible conduit with watertight connectors in damp or wet locations.

C. Connect heat producing equipment using wire and cable with insulation suitable for temperatures encountered.

D. Provide receptacle outlet to accommodate connection with attachment plug.

E. Provide cord and cap where field-supplied attachment plug is required.

F. Install suitable strain-relief clamps and fittings for cord connections at outlet boxes and equipment connection boxes.

G. Install disconnect switches, controllers, control stations, and control devices to complete equipment wiring requirements.

H. Install terminal block jumpers to complete equipment wiring requirements.

I. Install interconnecting conduit and wiring between devices and equipment to complete equipment wiring requirements.

END OF SECTION 260583

SECTION 260923
LIGHTING CONTROL DEVICES

PART 1 GENERAL

1.01 SECTION INCLUDES

A. Low-voltage digital lighting control systems.

B. Line-voltage switches and occupancy sensors.

1.02 RELATED REQUIREMENTS

A. Section 260526 - Grounding and Bonding for Electrical Systems.

B. Section 260529 - Hangers and Supports for Electrical Systems

C. Section 260533.16 - Boxes for Electrical Systems.

D. Section 260553 - Identification for Electrical Systems: Identification products and requirements.

E. Section 262726 - Wiring Devices: Devices for manual control of lighting, including wall switches, wall dimmers, and fan speed controllers.

F. Section 265100 - Interior Lighting.

1.03 REFERENCE STANDARDS

A. NECA 1 - Standard for Good Workmanship in Electrical Construction.

B. NECA 130 - Standard for Installing and Maintaining Wiring Devices.

C. NEMA 410 - Performance Testing for Lighting Controls and Switching Devices with Electronic Drivers and Discharge Ballasts.

D. NEMA EN 10250 - Enclosures for Electrical Equipment (1000 Volts Maximum).

E. NFPA 70 - National Electrical Code.

F. UL 916 - Energy Management Equipment.

G. UL 917 - Clock-Operated Switches.

H. UL 1472 - Solid-State Dimming Controls.

1.04 ADMINISTRATIVE REQUIREMENTS

A. Coordination:
   1. Coordinate the placement of lighting control devices with millwork, furniture, equipment, etc. installed under other sections or by others.
   2. Coordinate the placement of wall switch occupancy sensors with actual installed door swings.
   3. Coordinate the placement of occupancy sensors with millwork, furniture, equipment or other potential obstructions to motion detection coverage installed under other sections or by others.
   4. Notify Architect of any conflicts or deviations from Contract Documents to obtain direction prior to proceeding with work.

B. Sequencing:
   1. Do not install lighting control devices until final surface finishes and painting are complete.

1.05 SUBMITTALS

A. See Section 013000 - Administrative Requirements, for submittal procedures.

B. Product Data: Include manufacturer's standad data sheets to include: ratings, configurations, standard wiring diagrams, dimensions, colors, service condition requirements, and installed features.
   1. Occupancy Sensors: Include detailed motion detection coverage range diagrams.

C. Maintenance Materials: Furnish the following for Owner's use in maintenance of project.
   1. See Section 016000 - Product Requirements, for additional provisions.

2. Provide One WattStopper LMCT-100 Digital Wireless Configuration Tools.

1.06 QUALITY ASSURANCE

A. Comply with requirements of NFPA 70.

B. Product Listing Organization Qualifications: An organization recognized by OSHA as a Nationally Recognized Testing Laboratory (NRTL) and acceptable to authorities having jurisdiction.

1.07 DELIVERY, STORAGE, AND PROTECTION

A. Store products in a clean, dry space in original manufacturer's packaging in accordance with manufacturer's written instructions until ready for installation.

1.08 FIELD CONDITIONS

A. Maintain field conditions within manufacturer's required service conditions during and after installation.

PART 2 PRODUCTS

2.01 LIGHTING CONTROL DEVICES - GENERAL REQUIREMENTS

A. Provide products listed, classified, and labeled as suitable for the purpose intended.

B. Unless specifically indicated to be excluded, provide all required conduit, wiring, connectors, hardware, components, accessories, etc. as required for a complete operating system.

C. Products for Switching of Electronic Ballasts/Drivers: Tested and rated to be suitable for peak inrush currents specified in NEMA 410.

2.02 LOW-VOLTAGE LIGHTING CONTROL SYSTEMS

A. Manufacturer:
   1. WattStopper: www.wattstopper.com
      a. System:
         1) Digital Lighting Management (DLM)
   2. Substitutions: Not Permitted.

2.03 LINE-VOLTAGE SWITCHES AND OCCUPANCY SENSORS

A. Manufacturers:
   1. Hubbell Wiring Devices - Kellems (H-Moss): www.hubbell-wiring.com
   2. Substitutions: Not permitted.
   3. Source Limitations: Furnish products produced by a single manufacturer.

B. Combination Wall Switch-Occupancy Sensor:
   1. Hubbell Wiring Devices:
      a. Catalog Number: AD1277.
      b. Color: Ivory.
      c. Single or Dual Circuit, as noted on drawings.

PART 3 EXECUTION

3.01 EXAMINATION

A. Verify that field measurements are as indicated.

B. Verify that outlet boxes are installed in proper locations and at proper mounting heights and are properly sized to accommodate devices and conductors in accordance with NFPA 70.

C. Verify that openings for outlet boxes are neatly cut and will be completely covered by devices or wall plates.

D. Verify that final surface finishes are complete, including painting.

E. Verify that branch circuit wiring installation is completed, tested, and ready for connection to lighting control devices.

F. Verify that the service voltage and ratings of lighting control devices are appropriate for the service voltage and load requirements at the location to be installed.

G. Verify that conditions are satisfactory for installation prior to starting work.

3.02 PREPARATION

A. Provide extension rings to bring outlet boxes flush with finished surface.

B. Clean dirt, debris, plaster, and other foreign materials from outlet boxes.

3.03 INSTALLATION

A. Install lighting control devices in accordance with NECA 1 (general workmanship) and, where applicable, NECA 130, including mounting heights specified in those standards unless otherwise indicated.

B. Coordinate locations of outlet boxes provided under Section 260533.16 as required for installation of lighting control devices provided under this section.
   1. Mounting Heights: As indicated on the drawings.
   2. Orient outlet boxes for vertical installation of lighting control devices unless otherwise indicated.
   3. Locate wall switch occupancy sensors on strike side of door with edge of wall plate 4 inches from edge of door frame. Where locations are indicated otherwise, notify Architect to obtain direction prior to proceeding with work.

C. Install lighting control devices in accordance with manufacturer's instructions and the following guidance:
   1. Utilize Wattstopper DLM Device Model LMDC-100 where ceilings are 8 foot to 12 foot above finished floor.
   2. Utilize Wattstopper DLM Device Model LMDX-100 where ceilings are greater than 12 foot above finished floor. Mount on walls 8 foot to 12 foot above finsihed floor.

D. Connect lighting control device grounding terminal or conductor to branch circuit equipment grounding conductor and to outlet box with bonding jumper.

E. Install lighting control devices plumb and level, and held securely in place.

F. Where required and not furnished with lighting control device, provide wall plate in accordance with Section 262726.

G. Provide required supports in accordance with Section 260529.

H. Install lighting control devices and associated wall plates to fit completely flush to mounting surface with no gaps and rough opening completely covered without strain on wall plate. Repair or reinstall improperly installed outlet boxes or improperly sized rough openings.

I. Identify lighting control devices in accordance with Section 260553.

J. Occupancy Sensor Locations:
   1. Location Adjustments: Within the design intent, reasonably minor adjustments to locations may be made in order to optimize coverage and avoid conflicts or problems affecting coverage.
   2. Locate dual technology passive infrared/ultrasonic occupancy sensors a minimum of 4 feet from air supply ducts or other sources of heavy air flow and as per manufacturer's recommendations, in order to minimize false triggers.

K. Lamp Burn-In: Operate lamps at full output for minimum of 100 hours or prescribed period per manufacturer's recommendations prior to use with any dimming controls. Replace lamps that fail prematurely due to improper lamp burn-in.

L. Where indicated or required, provide cabinet or enclosure in accordance with Section 260533.16 for mounting of lighting control device system components.

3.04 FIELD QUALITY CONTROL

A. See Section 014000 - Quality Requirements, for additional requirements.

B. Inspect each lighting control device for damage and defects.

C. Test occupancy sensors to verify proper operation, including time delays and ambient light thresholds where applicable. Verify optimal coverage for entire room or area. Record test results in written report to be included with submittals.

D. Correct wiring deficiencies and replace damaged or defective lighting control devices.

3.05 ADJUSTING

A. Adjust devices and wall plates to be flush and level.

B. Adjust occupancy sensor settings, as necessary, to minimize undesired activations and to achieve desired function.

3.06 CLEANING

A. Clean exposed surfaces to remove dirt, paint, or other foreign material and restore to match original factory finish.

3.07 CLOSEOUT ACTIVITIES

A. Demonstration: Demonstrate proper operation of lighting control devices to Architect, and correct deficiencies or make adjustments as directed.

B. Training: Train Owner's personnel on operation, adjustment, programming, and maintenance of lighting control devices.

1. Use operation and maintenance manual as training reference, supplemented with additional training materials as required.
2. Location: At project site.

END OF SECTION 260923

SECTION 262416
PANELBOARDS

PART 1 GENERAL

1.01 SECTION INCLUDES

A. Lighting and appliance panelboards.

B. Overcurrent protective devices for panelboards.

1.02 RELATED REQUIREMENTS

A. Section 260526 - Grounding and Bonding for Electrical Systems.

B. Section 260529 - Hangers and Supports for Electrical Systems.

C. Section 260548 - Vibration and Seismic Controls for Electrical Systems.
   1. Includes requirements for the seismic qualification of equipment specified in this section.

D. Section 260553 - Identification for Electrical Systems: Identification products and requirements.

E. Section 262813 - Fuses: Fuses for fusible switches and spare fuse cabinets.

1.03 REFERENCE STANDARDS

A. FS W-C-375 - Circuit Breakers, Molded Case; Branch Circuit and Service.

B. NECA 1 - Standard for Good Workmanship in Electrical Construction.

C. NECA 407 - Standard for Installing and Maintaining Panelboards.

D. NEMA BS 31047 - Heavy Duty Enclosed and Dead-Front Switches (600 Volts Maximum).

E. NEMA EN 10250 - Enclosures for Electrical Equipment (1000 Volts Maximum).

F. NEMA ICS 2 - Industrial Control and Systems Controllers, Contactors and Overload Relays Rated 600 Volts.

G. NEMA PB 1 - Panelboards.

H. NEMA PB 1.1 - General Instructions for Proper Installation, Operation and Maintenance of Panelboards Rated 1000 Volts or Less.

I. NETA ATS - Standard for Acceptance Testing Specifications for Electrical Power Equipment And Systems.

J. NFPA 70 - National Electrical Code.

K. UL 50 - Enclosures for Electrical Equipment, Non-Environmental Considerations.

L. UL 50E - Enclosures for Electrical Equipment, Environmental Considerations.

M. UL 67 - Panelboards.

N. UL 98 - Enclosed and Dead-Front Switches.

O. UL 489 - Molded-Case Circuit Breakers, Molded-Case Switches and Circuit Breaker Enclosures.

P. UL 869A - Reference Standard for Service Equipment.

Q. UL 943 - Ground-Fault Circuit-Interrupters.

R. UL 1053 - Ground-Fault Sensing and Relaying Equipment.

S. UL 1699 - Arc-Fault Circuit-Interrupters.

1.04 ADMINISTRATIVE REQUIREMENTS

A. Coordination:
   1. Coordinate the work with other trades to avoid placement of ductwork, piping, equipment, or other potential obstructions within the dedicated equipment spaces and working clearances for electrical equipment required by NFPA 70.

2. Coordinate arrangement of electrical equipment with the dimensions and clearance requirements of the actual equipment to be installed.
3. Coordinate the work with other trades to provide walls suitable for installation of flush-mounted panelboards where indicated.
4. Verify with manufacturer that conductor terminations are suitable for use with the conductors to be installed.
5. Notify Architect of any conflicts with or deviations from Contract Documents. Obtain direction before proceeding with work.

1.05 SUBMITTALS

A. See Section 013000 - Administrative Requirements, for submittal procedures.

B. Product Data: Provide manufacturer's standard catalog pages and data sheets for panelboards, enclosures, overcurrent protective devices, and other installed components and accessories.
1. Include characteristic trip curves for each type and rating of overcurrent protective device.

C. Shop Drawings: Indicate outline and support point dimensions, voltage, main bus ampacity, overcurrent protective device arrangement and sizes, short circuit current ratings, conduit entry locations, conductor terminal information, and installed features and accessories.
1. Include dimensioned plan and elevation views of panelboards and adjacent equipment with all required clearances indicated.
2. Include wiring diagrams showing all factory and field connections.
3. Identify mounting conditions required for equipment seismic qualification.

D. Manufacturer's equipment seismic qualification certification.

E. Maintenance Data: Include information on replacement parts and recommended maintenance procedures and intervals.

F. Maintenance Materials: Furnish the following for Owner's use in maintenance of project.
1. See Section 016000 - Product Requirements, for additional provisions.
2. Panelboard Keys: Two of each different key.

1.06 QUALITY ASSURANCE

A. Comply with requirements of NFPA 70.

B. Product Listing Organization Qualifications: An organization recognized by OSHA as a Nationally Recognized Testing Laboratory (NRTL) and acceptable to authorities having jurisdiction.

1.07 DELIVERY, STORAGE, AND HANDLING

A. Receive, inspect, handle, and store panelboards in accordance with manufacturer's instructions and NECA 407.

B. Store in a clean, dry space. Maintain factory wrapping or provide an additional heavy canvas or heavy plastic cover to protect units from dirt, water, construction debris, and traffic.

C. Handle carefully in accordance with manufacturer's written instructions to avoid damage to panelboard internal components, enclosure, and finish.

1.08 FIELD CONDITIONS

A. Maintain ambient temperature within the following limits during and after installation of panelboards:
1. Panelboards Containing Circuit Breakers: Between 23 degrees F and 104 degrees F.

PART 2 PRODUCTS

2.01 MANUFACTURERS

A. ABB/GE: www.geindustrial.com/#sle.

B. Eaton Corporation: www.eaton.com.

C. Schneider Electric; Square D Products: www.schneider-electric.us.

D. Siemens Industry, Inc: www.usa.siemens.com.

E. Substitutions: Not Permitted.

F. Source Limitations: Furnish panelboards and associated components produced by the same manufacturer as the other electrical distribution equipment used for this project.

2.02 PANELBOARDS - GENERAL REQUIREMENTS

A. Provide products listed, classified, and labeled as suitable for the purpose intended.

B. Seismic Qualification: Provide panelboards and associated components suitable for application under the seismic design criteria specified in Section 260548 where required. Include certification of compliance with submittals.

C. Unless otherwise indicated, provide products suitable for continuous operation under the following service conditions:
   1. Altitude: Less than 6,600 feet.
   2. Ambient Temperature:
      a. Panelboards Containing Circuit Breakers: Between 23 degrees F and 104 degrees F.

D. Short Circuit Current Rating:
   1. Provide panelboards with listed short circuit current rating as indicated on the drawings.

E. Panelboards Used for Service Entrance: Listed and labeled as suitable for use as service equipment according to UL 869A.

F. Mains: Configure for top or bottom incoming feed as indicated or as required for the installation.

G. Branch Overcurrent Protective Devices: Replaceable without disturbing adjacent devices.

H. Bussing: Sized in accordance with UL 67 temperature rise requirements.
   1. Provide fully rated neutral bus unless otherwise indicated, with a suitable lug for each feeder or branch circuit requiring a neutral connection.
   2. Provide 200 percent rated neutral bus and lugs where indicated, where oversized neutral conductors are provided, or where panelboards are fed from K-rated transformers.
   3. Provide solidly bonded equipment ground bus in each panelboard, with a suitable lug for each feeder and branch circuit equipment grounding conductor.

I. Conductor Terminations: Suitable for use with the conductors to be installed.

J. Enclosures: Comply with NEMA EN 10250, and list and label as complying with UL 50 and UL 50E.
   1. Environment Type per NEMA EN 10250: Unless otherwise indicated, as specified for the following installation locations:
      a. Indoor Clean, Dry Locations: Type 1.
      b. Outdoor Locations: Type 4X stainless steel.
   2. Boxes: Galvanized steel unless otherwise indicated.
      a. Provide wiring gutters sized to accommodate the conductors to be installed.
      b. Increase gutter space as required where feed-through lugs or oversized lugs are provided.
      c. Provide painted steel boxes for surface-mounted panelboardswhere exposed to public view, finish to match fronts.
   3. Fronts:
      a. Fronts for Surface-Mounted Enclosures: Same dimensions as boxes.
      b. Fronts for Flush-Mounted Enclosures: Overlap boxes on all sides to conceal rough opening.
      c. Finish for Painted Steel Fronts: Manufacturer's standard grey unless otherwise indicated.

4. Lockable Doors: All locks keyed alike unless otherwise indicated.

K. Future Provisions: Prepare all unused spaces for future installation of devices including bussing, connectors, mounting hardware and all other required provisions.

L. Surge Protective Devices: Where factory-installed, internally mounted surge protective devices are provided in accordance with Section 264300, list and label panelboards as a complete assembly including surge protective device.

M. Multi-Section Panelboards: Provide enclosures of the same height, with feed-through lugs or sub-feed lugs and feeders as indicated or as required to interconnect sections.

N. Provide the following features and accessories where indicated or where required to complete installation:
   1. Feed-through lugs.
   2. Oversized lugs.

2.03 LIGHTING AND APPLIANCE PANELBOARDS

A. Description: Panelboards complying with NEMA PB 1, lighting and appliance branch circuit type, circuit breaker type, and listed and labeled as complying with UL 67; ratings, configurations and features as indicated on the drawings.

B. Conductor Terminations:
   1. Main and Neutral Lug Material: Aluminum, suitable for terminating aluminum or copper conductors.
   2. Main and Neutral Lug Type: Mechanical.

C. Bussing:
   1. Phase Bus Connections: Arranged for sequential phasing of overcurrent protective devices.
   2. Phase and Neutral Bus Material: Copper.
   3. Ground Bus Material: Copper.

D. Circuit Breakers: Thermal magnetic bolt-on type.

E. Enclosures:
   1. Provide surface-mounted or flush-mounted enclosures as indicated.
   2. Fronts: Provide lockable hinged door with concealed hinges for access to overcurrent protective device handles without exposing live parts.
   3. Provide clear plastic circuit directory holder mounted on inside of door.

2.04 OVERCURRENT PROTECTIVE DEVICES

A. Molded Case Circuit Breakers:
   1. Description: Quick-make, quick-break, over center toggle, trip-free, trip-indicating circuit breakers listed and labeled as complying with UL 489; ratings, configurations, and features as indicated on the drawings.
   2. Interrupting Capacity:
      a. Provide circuit breakers with interrupting capacity as required to provide the short circuit current rating as indicated on drawings.
      b. Fully Rated Systems: Provide circuit breakers with interrupting capacity not less than the short circuit current rating indicated.
   3. Conductor Terminations:
      a. Provide mechanical lugs unless otherwise indicated.
      b. Provide compression lugs where indicated.
      c. Lug Material: Aluminum, suitable for terminating aluminum or copper conductors.
   4. Thermal Magnetic Circuit Breakers: For each pole, furnish thermal inverse time tripping element for overload protection and magnetic instantaneous tripping element for short circuit protection.
   5. Multi-Pole Circuit Breakers: Furnish with common trip for all poles.
   6. Do not use handle ties in lieu of multi-pole circuit breakers.

7. Do not utilize multi-pole circuit breakers for multi-wire branch circuits. Utilize single-pole breakers and single neutrals for every branch circuit instead.

PART 3 EXECUTION

3.01 EXAMINATION

A. Verify that field measurements are as indicated.

B. Verify that the ratings and configurations of the panelboards and associated components are consistent with the indicated requirements.

C. Verify that mounting surfaces are ready to receive panelboards.

D. Verify that conditions are satisfactory for installation prior to starting work.

3.02 INSTALLATION

A. Perform work in accordance with NECA 1 (general workmanship).

B. Install products in accordance with manufacturer's instructions.

C. Install panelboards in accordance with NECA 407 and NEMA PB 1.1.

D. Arrange equipment to provide minimum clearances in accordance with manufacturer's instructions and NFPA 70.

E. Provide required support and attachment in accordance with Section 260529.

F. Install panelboards plumb.

G. Install flush-mounted panelboards so that trims fit completely flush to wall with no gaps and rough opening completely covered.

H. Mount panelboards such that the highest position of any operating handle for circuit breakers or switches does not exceed 79 inches above the floor or working platform.

I. Mount floor-mounted power distribution panelboards on properly sized 4 inch high concrete pad constructed in accordance with Section 033000.

J. Provide minimum of six spare 1 inch trade size conduits out of each flush-mounted panelboard stubbed into accessible space above ceiling.

K. Provide grounding and bonding in accordance with Section 260526.

L. Install all field-installed branch devices, components, and accessories.

M. Provide fuses complying with Section 262813 for fusible switches as indicated.

N. Where accessories are not self-powered, provide control power source as indicated on drawings.

O. Multi-Wire Branch Circuits: Group grounded and ungrounded conductors together in the panelboard as required by NFPA 70.

P. Set field-adjustable circuit breaker tripping function settings as indicated.

Q. Set field-adjustable ground fault protection pickup and time delay settings as indicated.

R. Provide filler plates to cover unused spaces in panelboards.

S. Identify panelboards in accordance with Section 260553.

3.03 FIELD QUALITY CONTROL

A. See Section 014000 - Quality Requirements, for additional requirements.

B. Inspect and test in accordance with NETA ATS, except Section 4.

C. Molded Case Circuit Breakers: Perform inspections and tests listed in NETA ATS, Section 7.6.1.1for all main circuit breakers. Tests listed as optional are not required.

D. Ground Fault Protection Systems: Test in accordance with manufacturer's instructions as required by NFPA 70.

E. Test GFCI circuit breakers to verify proper operation.

F. Test AFCI circuit breakers to verify proper operation.

G. Test shunt trips to verify proper operation.

H. Correct deficiencies and replace damaged or defective panelboards or associated components.

3.04 ADJUSTING

A. Adjust tightness of mechanical and electrical connections to manufacturer's recommended torque settings.

B. Adjust alignment of panelboard fronts.

C. Load Balancing: For each panelboard, rearrange circuits such that the difference between each measured steady state phase load does not exceed 20 percent and adjust circuit directories accordingly. Maintain proper phasing for multi-wire branch circuits.

3.05 CLEANING

A. Clean dirt and debris from panelboard enclosures and components according to manufacturer's instructions.

B. Repair scratched or marred exterior surfaces to match original factory finish.

END OF SECTION 262416

SECTION 262726
WIRING DEVICES

PART 1 GENERAL

1.01 SECTION INCLUDES

A. Wall switches.

B. Wall dimmers.

C. Receptacles.

D. Wall plates.

E. Floor box service fittings.

1.02 RELATED REQUIREMENTS

A. Section 260526 - Grounding and Bonding for Electrical Systems.

B. Section 260533.16 - Boxes for Electrical Systems.

C. Section 260533.23 - Surface Raceways for Electrical Systems: Surface raceway systems, including multioutlet assemblies.

D. Section 260553 - Identification for Electrical Systems: Identification products and requirements.

E. Section 260583 - Wiring Connections: Cords and plugs for equipment.

F. Section 260923 - Lighting Control Devices: Devices for automatic control of lighting, including occupancy sensors, in-wall time switches, and in-wall interval timers.

G. Section 262723 - Indoor Service Poles.

H. Section 271000 - Structured Cabling: Voice and data jacks.

1.03 REFERENCE STANDARDS

A. NECA 1 - Standard for Good Workmanship in Electrical Construction.

B. NECA 130 - Standard for Installing and Maintaining Wiring Devices.

C. NEMA WD 1 - General Color Requirements for Wiring Devices.

D. NEMA WD 6 - Wiring Devices - Dimensional Specifications.

E. NFPA 70 - National Electrical Code.

F. UL 20 - General-Use Snap Switches.

G. UL 498 - Attachment Plugs and Receptacles.

H. UL 514D - Cover Plates for Flush-Mounted Wiring Devices.

I. UL 943 - Ground-Fault Circuit-Interrupters.

J. UL 1449 - Standard for Surge Protective Devices.

1.04 ADMINISTRATIVE REQUIREMENTS

A. Coordination:

1. Coordinate the placement of outlet boxes with millwork, furniture, equipment, etc. installed under other sections or by others.
2. Coordinate wiring device ratings and configurations with the electrical requirements of actual equipment to be installed.
3. Coordinate the placement of outlet boxes for wall switches with actual installed door swings.
4. Coordinate the installation and preparation of uneven surfaces, such as split face block, to provide suitable surface for installation of wiring devices.
5. Notify Architect of any conflicts or deviations from Contract Documents to obtain direction prior to proceeding with work.

B. Sequencing:

1. Do not install wiring devices until final surface finishes and painting are complete.

1.05 SUBMITTALS

A. No submittals required.

1.06 QUALITY ASSURANCE

A. Comply with requirements of NFPA 70.

B. Products: Listed, classified, and labeled as suitable for the purpose intended.

C. Product Listing Organization Qualifications: An organization recognized by OSHA as a Nationally Recognized Testing Laboratory (NRTL) and acceptable to authorities having jurisdiction.

1.07 DELIVERY, STORAGE, AND PROTECTION

A. Store in a clean, dry space in original manufacturer's packaging until ready for installation.

PART 2 PRODUCTS

2.01 WIRING DEVICE FINISHES

A. Provide wiring device finishes as described below unless otherwise indicated.

B. Wiring Devices Installed in Finished Spaces: Ivory withivory nylon wall plate.

C. Wiring Devices Installed in Unfinished Spaces: Ivory withivory nylon wall plate.

D. Wiring Devices Installed in Wet or Damp Locations: Ivory with specified weatherproof cover.

E. Wiring Devices Installed in Rough Service Locations (Laboratories Workshops Gymnasiums Kitchens): Ivory with stainless steel wall plate.

F. Wiring Devices Connected to Emergency Power: Red with red nylon wall plate.

G. Wiring Devices Connected to TVSS Power Panels: Grey with grey nylon wall plate.

2.02 WALL SWITCHES

A. Wall Switches - General Requirements: AC only, quiet operating, general-use snap switches with silver alloy contacts, complying with NEMA WD 1 and NEMA WD 6, and listed as complying with UL 20; types as indicated on the drawings.
   1. Wiring Provisions: Terminal screws for side wiring and screw actuated binding clamp for back wiring with separate ground terminal screw.

B. Standard Wall Switches: Industrial specification grade, 20 A, 120/277 V with standard toggle type switch actuator and maintained contacts; single pole single throw, double pole single throw, three way, or four way as indicated on the drawings.

2.03 RECEPTACLES

A. Receptacles - General Requirements: Self-grounding, complying with NEMA WD 1 and NEMA WD 6, and listed as complying with UL 498; types as indicated on the drawings.
   1. Wiring Provisions: Terminal screws for side wiring or screw actuated binding clamp for back wiring with separate ground terminal screw.
   2. NEMA configurations specified are according to NEMA WD 6.

B. Convenience Receptacles:
   1. Standard Convenience Receptacles: Commercial specification grade, 20A, 125V, NEMA 5-20R; single or duplex as indicated on the drawings.
   2. Weather Resistant Convenience Receptacles: Industrial specification grade, 20A, 125V, NEMA 5-20R, listed and labeled as weather resistant type complying with UL 498 Supplement SD suitable for installation in damp or wet locations; single or duplex as indicated on the drawings.

C. GFCI Receptacles:

1. GFCI Receptacles - General Requirements: Self-testing, with feed-through protection and light to indicate ground fault tripped condition and loss of protection; listed as complying with UL 943, class A.
    a. Provide test and reset buttons of same color as device.
2. Standard GFCI Receptacles: Industrial specification grade, duplex, 20A, 125V, NEMA 5-20R, rectangular decorator style.

2.04 WALL PLATES

A. Wall Plates: Comply with UL 514D.
    1. Configuration: One piece cover as required for quantity and types of corresponding wiring devices.
    2. Size: Standard.
    3. Screws: Metal with slotted heads finished to match wall plate finish.

B. Nylon Wall Plates: Smooth finish, high-impact thermoplastic.

C. Stainless Steel Wall Plates: Brushed satin finish, Type 302 stainless steel.

D. Weatherproof Covers for Wetor Damp Locations: Gasketed, cast aluminum, with hinged lockable cover and corrosion-resistant screws; listed as suitable for use in wet locations while in use with attachment plugs connected and identified as extra-duty type.

2.05 FLOOR BOX SERVICE FITTINGS

A. Manufacturers:
    1. Hubbell Incorporated: www.hubbell.com/#sle.
    2. Thomas & Betts Corporation: www.tnb.com/#sle.
    3. Wiremold, a brand of Legrand North America, Inc: www.legrand.us/#sle.
    4. Substitutions: See Section 016000 - Product Requirements.

B. Description: Service fittings compatible with floor boxes provided under Section 260533.16 with components, adapters, and trims required for complete installation.

PART 3 EXECUTION

3.01 EXAMINATION

A. Verify that field measurements are as indicated.

B. Verify that outlet boxes are installed in proper locations and at proper mounting heights and are properly sized to accommodate devices and conductors in accordance with NFPA 70.

C. Verify that wall openings are neatly cut and will be completely covered by wall plates.

D. Verify that final surface finishes are complete, including painting.

E. Verify that floor boxes are adjusted properly.

F. Verify that branch circuit wiring installation is completed, tested, and ready for connection to wiring devices.

G. Verify that conditions are satisfactory for installation prior to starting work.

3.02 PREPARATION

A. Provide extension rings to bring outlet boxes flush with finished surface.

B. Clean dirt, debris, plaster, and other foreign materials from outlet boxes.

3.03 INSTALLATION

A. Perform work in accordance with NECA 1 (general workmanship) and, where applicable, NECA 130, including mounting heights specified in those standards unless otherwise indicated.

B. Coordinate locations of outlet boxes provided under Section 260533.16 as required for installation of wiring devices provided under this section.
    1. Mounting Heights: As indicated on the drawings.
    2. Orient outlet boxes for vertical installation of wiring devices unless otherwise indicated.

3. Where multiple receptacles, wall switches, or wall dimmers are installed at the same location and at the same mounting height, gang devices together under a common wall plate.
4. Locate wall switches on strike side of door with edge of wall plate 4 inches from edge of door frame. Where 4 inches is not possible due, notify Architect to obtain direction prior to proceeding with work.
5. Locate receptacles for electric drinking fountains concealed behind drinking fountain according to manufacturer's instructions.

C. Install wiring devices in accordance with manufacturer's instructions.

D. Install permanent barrier between ganged wiring devices when voltage between adjacent devices exceeds 300 V.

E. Connect wiring devices using pigtails not less than 6 inches long. Do not connect more than one conductor to wiring device terminals.

F. Connect wiring devices by wrapping conductor clockwise 3/4 turn around screw terminal and tightening to proper torque specified by the manufacturer. Do not use push-in pressure terminals that do not rely on screw-actuated binding.

G. Connect wiring device grounding terminal to branch circuit equipment grounding conductor and to outlet box with bonding jumper.

H. Provide GFCI receptacles with integral GFCI protection at each location indicated. Do not use feed-through wiring to protect downstream devices.

I. Where split-wired duplex receptacles are indicated, remove tabs connecting top and bottom receptacles.

J. Install wiring devices plumb and level with mounting yoke held rigidly in place.

K. Install wall switches with OFF position down.

L. Install vertically mounted receptacles with grounding pole on bottom and horizontally mounted receptacles with grounding pole on left.

M. Install wall plates to fit completely flush to wall with no gaps and rough opening completely covered without strain on wall plate. Repair or reinstall improperly installed outlet boxes or improperly sized rough openings.

N. Install blank wall plates on junction boxes and on outlet boxes with no wiring devices installed or designated for future use.

O. Identify wiring devices in accordance with Section 260553.

3.04 FIELD QUALITY CONTROL

A. See Section 014000 - Quality Requirements, for additional requirements.

B. Inspect each wiring device for damage and defects.

C. Operate each wall switch with circuit energized to verify proper operation.

D. Test each receptacle to verify operation and proper polarity.

E. Test each GFCI receptacle for proper tripping operation according to manufacturer's instructions.

F. Inspect each surge protection receptacle to verify surge protection is active.

G. Correct wiring deficiencies and replace damaged or defective wiring devices.

3.05 ADJUSTING

A. Adjust devices and wall plates to be flush and level.

3.06 CLEANING

A. Clean exposed surfaces to remove dirt, paint, or other foreign material and restore to match original factory finish.

END OF SECTION 262726

SECTION 262813
FUSES

PART 1 GENERAL

1.01 SECTION INCLUDES

A. Fuses.

1.02 RELATED REQUIREMENTS

A. Section 260553 - Identification for Electrical Systems: Identification products and requirements.

B. Section 262413 - Switchboards: Fusible switches.

C. Section 262416 - Panelboards: Fusible switches.

D. Section 262419 - Motor-Control Centers: Fusible switches.

E. Section 262513 - Low-Voltage Busways: Fusible switches.

F. Section 262816.16 - Enclosed Switches: Fusible switches.

G. Section 262913 - Enclosed Controllers: Fusible switches.

1.03 REFERENCE STANDARDS

A. NEMA FU 1 - Low Voltage Cartridge Fuses.

B. NFPA 70 - National Electrical Code.

C. UL 248-1 - Low-Voltage Fuses - Part 1: General Requirements.

D. UL 248-4 - Low-Voltage Fuses - Part 4: Class CC Fuses.

E. UL 248-8 - Low-Voltage Fuses - Part 8: Class J Fuses.

F. UL 248-10 - Low-Voltage Fuses - Part 10: Class L Fuses.

G. UL 248-12 - Low-Voltage Fuses - Part 12: Class R Fuses.

H. UL 248-15 - Low-Voltage Fuses - Part 15: Class T Fuses.

1.04 SUBMITTALS

A. See Section 013000 - Administrative Requirements, for submittal procedures.

B. Product Data: Provide manufacturer's standard data sheets including voltage and current ratings, interrupting ratings, time-current curves, and current limitation curves.

C. Maintenance Materials: Furnish the following for Owner's use in maintenance of project.
   1. See Section 016000 - Product Requirements, for additional provisions.
   2. Extra Fuses: One set(s) of three for each type and size installed.

1.05 QUALITY ASSURANCE

A. Comply with requirements of NFPA 70.

B. Product Listing Organization Qualifications: An organization recognized by OSHA as a Nationally Recognized Testing Laboratory (NRTL) and acceptable to authorities having jurisdiction.

PART 2 PRODUCTS

2.01 MANUFACTURERS

A. Bussmann, a division of Eaton Corporation: www.cooperindustries.com.

B. Littelfuse, Inc: www.littelfuse.com.

C. Mersen: ep-us.mersen.com.

D. Substitutions: See Section 016000 - Product Requirements.

2.02 APPLICATIONS

A. Service Entrance:

1. Fusible Switches up to 600 Amperes: Class RK1, time-delay.
2. Fusible Switches Larger Than 600 Amperes: Class L, time-delay.

B. Feeders:
1. Fusible Switches up to 600 Amperes: Class RK1, time-delay.
2. Fusible Switches Larger Than 600 Amperes: Class L, time-delay.

C. General Purpose Branch Circuits: Class RK1, time-delay.

D. Individual Motor Branch Circuits: Class RK1, time-delay.

E. In-Line Protection for Pole-Mounted Luminaires: Class CC, time-delay.

F. Primary Protection for Control Transformers: Class CC, time-delay.

2.03 FUSES

A. Provide products listed, classified, and labeled as suitable for the purpose intended.

B. Unless specifically indicated to be excluded, provide fuses for all fusible equipment as required for a complete operating system.

C. Provide fuses of the same type, rating, and manufacturer within the same switch.

D. Comply with UL 248-1.

E. Unless otherwise indicated, provide cartridge type fuses complying with NEMA FU 1, Class and ratings as indicated.

F. Voltage Rating: Suitable for circuit voltage.

G. Class R Fuses: Comply with UL 248-12.

H. Class J Fuses: Comply with UL 248-8.

I. Class L Fuses: Comply with UL 248-10.

J. Class T Fuses: Comply with UL 248-15.

K. Class CC Fuses: Comply with UL 248-4.

L. Selectivity: Where the requirement for selectivity is indicated, furnish products as required to achieve selective coordination.

M. Provide the following accessories where indicated or where required to complete installation:
1. Fuseholders: Compatible with indicated fuses.
2. Fuse Reducers: For adapting indicated fuses to permit installation in switch designed for fuses with larger ampere ratings.

PART 3 EXECUTION

3.01 EXAMINATION

A. Verify that fuse ratings are consistent with circuit voltage and manufacturer's recommendations and nameplate data for equipment.

B. Verify that conditions are satisfactory for installation prior to starting work.

3.02 INSTALLATION

A. Do not install fuses until circuits are ready to be energized.

B. Install fuses with label oriented such that manufacturer, type, and size are easily read.

END OF SECTION 262813

SECTION 262816.13
ENCLOSED CIRCUIT BREAKERS

PART 1 GENERAL

1.01 SECTION INCLUDES

A. Enclosed circuit breakers.

1.02 RELATED REQUIREMENTS

A. Section 260526 - Grounding and Bonding for Electrical Systems.

B. Section 260529 - Hangers and Supports for Electrical Systems.

C. Section 260548 - Vibration and Seismic Controls for Electrical Systems.
   1. Includes requirements for the seismic qualification of equipment specified in this section.

D. Section 260553 - Identification for Electrical Systems: Identification products and requirements.

E. Section 260573 - Power System Studies: Additional criteria for the selection and adjustment of equipment and associated protective devices specified in this section.

1.03 REFERENCE STANDARDS

A. NECA 1 - Standard for Good Workmanship in Electrical Construction.

B. NEMA EN 10250 - Enclosures for Electrical Equipment (1000 Volts Maximum).

C. NETA ATS - Standard for Acceptance Testing Specifications for Electrical Power Equipment And Systems.

D. NFPA 70 - National Electrical Code.

E. UL 50 - Enclosures for Electrical Equipment, Non-Environmental Considerations.

F. UL 50E - Enclosures for Electrical Equipment, Environmental Considerations.

G. UL 489 - Molded-Case Circuit Breakers, Molded-Case Switches and Circuit Breaker Enclosures.

H. UL 869A - Reference Standard for Service Equipment.

I. UL 943 - Ground-Fault Circuit-Interrupters.

J. UL 1053 - Ground-Fault Sensing and Relaying Equipment.

1.04 ADMINISTRATIVE REQUIREMENTS

A. Coordination:
   1. Coordinate work with other trades. Avoid placement of ductwork, piping, equipment, or other potential obstructions within dedicated equipment spaces and within working clearances for electrical equipment required by NFPA 70.
   2. Coordinate arrangement of electrical equipment with the dimensions and clearance requirements of the actual equipment to be installed.
   3. Coordinate the work with other trades to provide walls suitable for installation of flush-mounted enclosed circuit breakers where indicated.
   4. Verify with manufacturer that conductor terminations are suitable for use with the conductors to be installed.
   5. Notify Architect of any conflicts with or deviations from Contract Documents. Obtain direction before proceeding with work.

1.05 SUBMITTALS

A. See Section 013000 - Administrative Requirements, for submittal procedures.

B. Product Data: Provide manufacturer's standard catalog pages and data sheets for circuit breakers, enclosures, and other installed components and accessories.

C. Shop Drawings:

1. Include dimensioned plan and elevation views of enclosed circuit breakers and adjacent equipment with all required clearances indicated.
2. Include wiring diagrams showing all factory and field connections.
3. Identify mounting conditions required for equipment seismic qualification.

D. Manufacturer's equipment seismic qualification certification.

E. Maintenance Data: Include information on replacement parts and recommended maintenance procedures and intervals.

1.06 QUALITY ASSURANCE

A. Comply with requirements of NFPA 70.

B. Product Listing Organization Qualifications: An organization recognized by OSHA as a Nationally Recognized Testing Laboratory (NRTL) and acceptable to authorities having jurisdiction.

1.07 DELIVERY, STORAGE, AND HANDLING

A. Store in a clean, dry space. Maintain factory wrapping or provide an additional heavy canvas or heavy plastic cover to protect units from dirt, water, construction debris, and traffic.

B. Handle carefully in accordance with manufacturer's written instructions to avoid damage to enclosed circuit breaker internal components, enclosure, and finish.

PART 2 PRODUCTS

2.01 MANUFACTURERS

A. ABB/GE: www.geindustrial.com/#sle.

B. Eaton Corporation: www.eaton.com.

C. Schneider Electric; Square D Products: www.schneider-electric.us.

D. Siemens Industry, Inc: www.usa.siemens.com.

E. Substitutions: See Section 016000 - Product Requirements.

F. Source Limitations: Furnish enclosed circuit breakers and associated components produced by the same manufacturer as the other electrical distribution equipment used for this project and obtained from a single supplier.

2.02 ENCLOSED CIRCUIT BREAKERS

A. Description: Units consisting of molded case circuit breakers individually mounted in enclosures.

B. Provide products listed, classified, and labeled as suitable for the purpose intended.

C. Seismic Qualification: Provide enclosed circuit breakers and associated components suitable for application under the seismic design criteria specified in Section 260548 where required. Include certification of compliance with submittals.

D. Unless otherwise indicated, provide products suitable for continuous operation under the following service conditions:
1. Altitude: Less than 6,600 feet.
2. Ambient Temperature: Between 23 degrees F and 104 degrees F.

E. Short Circuit Current Rating:
1. Provide enclosed circuit breakers with listed short circuit current rating as indicated on the drawings.

F. Conductor Terminations: Suitable for use with the conductors to be installed.

G. Provide thermal magnetic circuit breakers unless otherwise indicated.

H. Provide electronic trip circuit breakers where indicated.

I. Provide insulated, groundable fully rated solid neutral assembly where a neutral connection is required, with a suitable lug for terminating each neutral conductor.

J. Provide solidly bonded equipment ground bus in each enclosed circuit breaker, with a suitable lug for terminating each equipment grounding conductor.

K. Enclosures: Comply with NEMA EN 10250, and list and label as complying with UL 50 and UL 50E.
   1. Environment Type per NEMA EN 10250: Unless otherwise indicated, as specified for the following installation locations:
      a. Indoor Clean, Dry Locations: Type 1.
      b. Outdoor Locations: Type 4X stainless steel.
   2. Finish for Painted Steel Enclosures: Manufacturer's standard, factory applied grey unless otherwise indicated.
   3. Provide surface-mounted enclosures.

L. Provide externally operable handle with means for locking in the OFF position.

M. Selectivity: Where the requirement for selectivity is indicated, furnish products as required to achieve selective coordination.

2.03 MOLDED CASE CIRCUIT BREAKERS

A. Description: Quick-make, quick-break, over center toggle, trip-free, trip-indicating circuit breakers listed and labeled as complying with UL 489; ratings, configurations, and features as indicated on the drawings.

B. Interrupting Capacity:
   1. Provide circuit breakers with interrupting capacity as required to provide the short circuit current rating as indicated on drawings.
   2. Fully Rated Systems: Provide circuit breakers with interrupting capacity not less than the short circuit current rating indicated.

C. Conductor Terminations:
   1. Provide mechanical lugs.
   2. Provide compression lugs.
   3. Lug Material: Aluminum, suitable for terminating aluminum or copper conductors.

D. Thermal Magnetic Circuit Breakers: For each pole, furnish thermal inverse time tripping element for overload protection and magnetic instantaneous tripping element for short circuit protection.

E. Electronic Trip Circuit Breakers: Furnish solid state, microprocessor-based, true rms sensing trip units.
   1. Provide the following field-adjustable trip response settings:
      a. Long time pickup, adjustable by replacing interchangeable trip unit or by setting dial.
      b. Long time delay.
      c. Short time pickup and delay.
      d. Instantaneous pickup.
      e. Ground fault pickup and delay where ground fault protection is indicated.

F. Multi-Pole Circuit Breakers: Furnish with common trip for all poles.

G. Provide listed switching duty rated circuit breakers with SWD marking for all branch circuits serving fluorescent lighting.

H. Provide listed high intensity discharge lighting rated circuit breakers with HID marking for all branch circuits serving HID lighting.

I. Do not use handle ties in lieu of multi-pole circuit breakers.

J. Do not utilize multi-pole circuit breakers for multi-wire branch circuits. Utilize single-pole breakers and single neutrals for every branch circuit instead.

PART 3 EXECUTION

3.01 EXAMINATION

A. Verify that field measurements are as indicated.

B. Verify that the ratings of the enclosed circuit breakers are consistent with the indicated requirements.

C. Verify that mounting surfaces are ready to receive enclosed circuit breakers.

D. Verify that conditions are satisfactory for installation prior to starting work.

3.02 INSTALLATION

A. Install products in accordance with manufacturer's instructions.

B. Perform work in accordance with NECA 1 (general workmanship).

C. Arrange equipment to provide minimum clearances in accordance with manufacturer's instructions and NFPA 70.

D. Provide required support and attachment in accordance with Section 260529.

E. Install enclosed circuit breakers plumb.

F. Install flush-mounted, as indicated on drawings, enclosed circuit breakers so that trims fit completely flush to wall with no gaps and rough opening completely covered.

G. Except where indicated to be mounted adjacent to the equipment they supply, mount enclosed circuit breakers such that the highest position of the operating handle does not exceed 79 inches above the floor or working platform.

H. Provide grounding and bonding in accordance with Section 260526.

I. Where accessories are not self-powered, provide control power source as indicated or as required to complete installation.

J. Set field-adjustable circuit breaker tripping function settings as indicated.

K. Set field-adjustable ground fault protection pickup and time delay settings as indicated.

L. Identify enclosed circuit breakers in accordance with Section 260553.

3.03 FIELD QUALITY CONTROL

A. See Section 014000 - Quality Requirements, for additional requirements.

B. Inspect and test in accordance with manufacturer's instructions and NETA ATS, except Section 4.

C. Perform inspections and tests listed in NETA ATS, Section 7.6.1.1for circuit breakers used for service entrance and for circuit breakers larger than 200 amperes. Tests listed as optional are not required.

D. Ground Fault Protection Systems: Test in accordance with manufacturer's instructions as required by NFPA 70.

E. Test GFCI circuit breakers to verify proper operation.

F. Test shunt trips to verify proper operation.

G. Correct deficiencies and replace damaged or defective enclosed circuit breakers.

3.04 ADJUSTING

A. Adjust tightness of mechanical and electrical connections to manufacturer's recommended torque settings.

3.05 CLEANING

A. Clean dirt and debris from circuit breaker enclosures and components according to manufacturer's instructions.

B. Repair scratched or marred exterior surfaces to match original factory finish.

END OF SECTION 262816.13

SECTION 262816.16
ENCLOSED SWITCHES

PART 1 GENERAL

1.01 SECTION INCLUDES

A. Enclosed safety switches.

1.02 RELATED REQUIREMENTS

A. Section 260526 - Grounding and Bonding for Electrical Systems.

B. Section 260529 - Hangers and Supports for Electrical Systems.

C. Section 260548 - Vibration and Seismic Controls for Electrical Systems.
   1. Includes requirements for the seismic qualification of equipment specified in this section.

D. Section 260553 - Identification for Electrical Systems: Identification products and requirements.

E. Section 262813 - Fuses.

1.03 REFERENCE STANDARDS

A. NECA 1 - Standard for Good Workmanship in Electrical Construction.

B. NEMA BS 31047 - Heavy Duty Enclosed and Dead-Front Switches (600 Volts Maximum).

C. NEMA EN 10250 - Enclosures for Electrical Equipment (1000 Volts Maximum).

D. NETA ATS - Standard for Acceptance Testing Specifications for Electrical Power Equipment And Systems.

E. NFPA 70 - National Electrical Code.

F. UL 50 - Enclosures for Electrical Equipment, Non-Environmental Considerations.

G. UL 50E - Enclosures for Electrical Equipment, Environmental Considerations.

H. UL 98 - Enclosed and Dead-Front Switches.

I. UL 869A - Reference Standard for Service Equipment.

1.04 ADMINISTRATIVE REQUIREMENTS

A. Coordination:
   1. Coordinate the work with other trades. Avoid placement of ductwork, piping, equipment, or other potential obstructions within the dedicated equipment spaces and within working clearances for electrical equipment required by NFPA 70.
   2. Coordinate arrangement of electrical equipment with the dimensions and clearance requirements of the actual equipment to be installed.
   3. Verify with manufacturer that conductor terminations are suitable for use with the conductors to be installed.
   4. Notify Architect of any conflicts with or deviations from Contract Documents. Obtain direction before proceeding with work.

1.05 SUBMITTALS

A. See Section 013000 - Administrative Requirements, for submittal procedures.

B. Product Data: Provide manufacturer's standard catalog pages and data sheets for enclosed switches and other installed components and accessories.

C. Shop Drawings: Indicate outline and support point dimensions, voltage and current ratings, short circuit current ratings, conduit entry locations, conductor terminal information, and installed features and accessories.
   1. Include dimensioned plan and elevation views of enclosed switches.
   2. Include wiring diagrams showing all factory and field connections.
   3. Identify mounting conditions required for equipment seismic qualification.

D. Manufacturer's equipment seismic qualification certification.

E. Maintenance Data: Include information on replacement parts and recommended maintenance procedures and intervals.

1.06 QUALITY ASSURANCE

A. Comply with requirements of NFPA 70.

B. Product Listing Organization Qualifications: An organization recognized by OSHA as a Nationally Recognized Testing Laboratory (NRTL) and acceptable to authorities having jurisdiction.

1.07 DELIVERY, STORAGE, AND HANDLING

A. Store in a clean, dry space. Maintain factory wrapping or provide an additional heavy canvas or heavy plastic cover to protect units from dirt, water, construction debris, and traffic.

B. Handle carefully in accordance with manufacturer's written instructions to avoid damage to enclosed switch internal components, enclosure, and finish.

PART 2 PRODUCTS

2.01 MANUFACTURERS

A. ABB/GE: www.geindustrial.com/#sle.

B. Eaton Corporation: www.eaton.com.

C. Schneider Electric; Square D Products: www.schneider-electric.us.

D. Siemens Industry, Inc: www.usa.siemens.com.

E. Substitutions: Not permitted.

F. Source Limitations: Furnish enclosed switches and associated components produced by the same manufacturer as the other electrical distribution equipment used for this project.

2.02 ENCLOSED SAFETY SWITCHES

A. Description: Quick-make, quick-break enclosed safety switches listed and labeled as complying with UL 98; heavy or general duty as indicated; ratings, configurations, and features as indicated on the drawings.

B. Provide products listed, classified, and labeled as suitable for the purpose intended.

C. Seismic Qualification: Provide enclosed safety switches suitable for application under the seismic design criteria specified in Section 260548 where required. Include certification of compliance with submittals.

D. Unless otherwise indicated, provide products suitable for continuous operation under the following service conditions:
   1. Altitude: Less than 6,600 feet.
   2. Ambient Temperature: Between -22 degrees F and 104 degrees F.

E. Horsepower Rating: Suitable for connected load.

F. Voltage Rating: Suitable for circuit voltage.

G. Short Circuit Current Rating:
   1. Provide enclosed safety switches, when protected by the fuses or supply side overcurrent protective devices to be installed, with listed short circuit current rating as indicated on the drawings.

H. Enclosed Safety Switches Used for Service Entrance: Listed and labeled as suitable for use as service equipment according to UL 869A.

I. Provide with switch blade contact position that is visible when the cover is open.

J. Fuse Clips for Fusible Switches: As required to accept fuses indicated.
   1. Where NEMA Class R fuses are installed, provide rejection feature to prevent installation of fuses other than Class R.

K. Conductor Terminations: Suitable for use with the conductors to be installed.

L. Provide insulated, groundable fully rated solid neutral assembly, with a suitable lug for terminating each neutral conductor.

M. Provide solidly bonded equipment ground bus in each enclosed safety switch, with a suitable lug for terminating each equipment grounding conductor.

N. Enclosures: Comply with NEMA EN 10250, and list and label as complying with UL 50 and UL 50E.
   1. Environment Type per NEMA EN 10250: Unless otherwise indicated, as specified for the following installation locations:
      a. Indoor Clean, Dry Locations: Type 1.
      b. Outdoor Locations: Type 4X stainless steel.
   2. Finish for Painted Steel Enclosures: Manufacturer's standard, factory applied grey unless otherwise indicated.

O. Provide safety interlock to prevent opening the cover with the switch in the ON position with capability of overriding interlock for testing purposes.

P. Heavy Duty Switches:
   1. Comply with NEMA BS 31047.
   2. Conductor Terminations:
      a. Provide mechanical lugs.
      b. Lug Material: Aluminum, suitable for terminating aluminum or copper conductors.
   3. Provide externally operable handle with means for locking in the OFF position, capable of accepting three padlocks.

Q. General Duty Switches:
   1. Conductor Terminations:
      a. Provide mechanical lugs.
      b. Lug Material: Aluminum, suitable for terminating aluminum or copper conductors.
   2. Provide externally operable handle with means for locking in the OFF position, capable of accepting two padlocks.

PART 3 EXECUTION

3.01 EXAMINATION

A. Verify that field measurements are as indicated.

B. Verify that the ratings of the enclosed switches are consistent with the indicated requirements.

C. Verify that mounting surfaces are ready to receive enclosed safety switches.

D. Verify that conditions are satisfactory for installation prior to starting work.

3.02 INSTALLATION

A. Install products in accordance with manufacturer's instructions.

B. Perform work in accordance with NECA 1 (general workmanship).

C. Arrange equipment to provide minimum clearances in accordance with manufacturer's instructions and NFPA 70.

D. Provide required support and attachment in accordance with Section 260529.

E. Provide required seismic controls in accordance with Section 260548.

F. Install enclosed switches plumb.

G. Except where indicated to be mounted adjacent to the equipment they supply, mount enclosed switches such that the highest position of the operating handle does not exceed 79 inches above the floor or working platform.

H. Provide grounding and bonding in accordance with Section 260526.

I. Provide fuses complying with Section 262813 for fusible switches as indicated or as required by equipment manufacturer's recommendations.

J. Where accessories are not self-powered, provide control power source as indicated or as required to complete installation.

K. Identify enclosed switches in accordance with Section 260553.

3.03 FIELD QUALITY CONTROL

A. See Section 014000 - Quality Requirements, for additional requirements.

B. Inspect and test in accordance with NETA ATS, except Section 4.

C. Perform inspections and tests listed in NETA ATS, Section 7.5.1.1.

D. Correct deficiencies and replace damaged or defective enclosed safety switches or associated components.

3.04 ADJUSTING

A. Adjust tightness of mechanical and electrical connections to manufacturer's recommended torque settings.

3.05 CLEANING

A. Clean dirt and debris from switch enclosures and components according to manufacturer's instructions.

B. Repair scratched or marred exterior surfaces to match original factory finish.

END OF SECTION 262816.16

SECTION 265100
INTERIOR LIGHTING

PART 1 GENERAL

1.01 SECTION INCLUDES

A. Interior luminaires.

B. Emergency lighting units.

C. Exit signs.

D. Ballasts and drivers.

E. Lamps.

F. Accessories.

1.02 RELATED REQUIREMENTS

A. Section 260529 - Hangers and Supports for Electrical Systems.

B. Section 260533.16 - Boxes for Electrical Systems.

C. Section 260553 - Identification for Electrical Systems: Identification products and requirements.

D. Section 260919 - Enclosed Contactors: Lighting contactors.

E. Section 262726 - Wiring Devices: Manual wall switches and wall dimmers.

F. Section 265600 - Exterior Lighting.

G. Section 275129.13 - Rescue Assistance Signal Systems: Area of refuge/rescue assistance signage.

1.03 REFERENCE STANDARDS

A. ANSI C82.4 - American National Standard for Lamp Ballasts - Ballasts for High-Intensity-Discharge and Low-Pressure Sodium Lamps.

B. ANSI C82.11 - American National Standard for Lamp Ballasts - High Frequency Fluorescent Lamp Ballasts.

C. IEC 60529 - Degrees of Protection Provided by Enclosures (IP Code).

D. IEEE C62.41.2 - IEEE Recommended Practice on Characterization of Surges in Low-Voltage (1000 V and Less) AC Power Circuits.

E. IES LM-79 - Approved Method: Optical and Electrical Measurements of Solid-State Lighting Products.

F. IES LM-80 - Approved Method: Measuring Maintenance of Light Output Characteristics of Solid-State Light Sources.

G. NECA 1 - Standard for Good Workmanship in Electrical Construction.

H. NECA/IESNA 500 - Standard for Installing Indoor Commercial Lighting Systems.

I. NECA/IESNA 502 - Standard for Installing Industrial Lighting Systems.

J. NEMA 410 - Performance Testing for Lighting Controls and Switching Devices with Electronic Drivers and Discharge Ballasts.

K. NEMA LE 4 - Recessed Luminaires, Ceiling Compatibility.

L. NFPA 70 - National Electrical Code.

M. NFPA 101 - Life Safety Code.

N. UL 844 - Luminaires for Use in Hazardous (Classified) Locations.

O. UL 924 - Emergency Lighting and Power Equipment.

P. UL 935 - Fluorescent-Lamp Ballasts.

Q. UL 1029 - High-Intensity-Discharge Lamp Ballasts.

R. UL 1598 - Luminaires.

S. UL 8750 - Light Emitting Diode (LED) Equipment for Use in Lighting Products.

1.04 ADMINISTRATIVE REQUIREMENTS

A. Coordination:

1. Coordinate the installation of luminaires with mounting surfaces installed under other sections or by others. Coordinate the work with placement of supports, anchors, etc. required for mounting. Coordinate compatibility of luminaires and associated trims with mounting surfaces at installed locations.
2. Coordinate the placement of luminaires with structural members, ductwork, piping, equipment, diffusers, fire suppression system components, and other potential conflicts installed under other sections or by others.
3. Coordinate the placement of exit signs with furniture, equipment, signage or other potential obstructions to visibility installed under other sections or by others.
4. Notify Architect of any conflicts or deviations from Contract Documents to obtain direction prior to proceeding with work.

1.05 SUBMITTALS

A. See Section 013000 - Administrative Requirements, for submittal procedures.

B. Product Data: Provide manufacturer's standard catalog pages and data sheets including detailed information on luminaire construction, dimensions, ratings, finishes, mounting requirements, listings, service conditions, photometric performance, installed accessories, and ceiling compatibility; include model number nomenclature clearly marked with all proposed features.

C. Manufacturer's Installation Instructions: Indicate application conditions and limitations of use stipulated by product testing agency. Include instructions for storage, handling, protection, examination, preparation, and installation of product.

D. Operation and Maintenance Data: Instructions for each product including information on replacement parts.

1.06 QUALITY ASSURANCE

A. Comply with requirements of NFPA 70.

B. Product Listing Organization Qualifications: An organization recognized by OSHA as a Nationally Recognized Testing Laboratory (NRTL) and acceptable to authorities having jurisdiction.

1.07 DELIVERY, STORAGE, AND PROTECTION

A. Receive, handle, and store products according to manufacturer's written instructions.

B. Keep products in original manufacturer's packaging and protect from damage until ready for installation.

PART 2 PRODUCTS

2.01 LUMINAIRE TYPES

A. Furnish products as indicated in luminaire schedule included on the drawings.

2.02 LUMINAIRES

A. Provide products that comply with requirements of NFPA 70.

B. Provide products that are listed and labeled as complying with UL 1598, where applicable.

C. Provide products listed, classified, and labeled as suitable for the purpose intended.

D. Unless otherwise indicated, provide complete luminaires including lamp(s) and all sockets, ballasts, reflectors, lenses, housings and other components required to position, energize and protect the lamp and distribute the light.

E. Unless specifically indicated to be excluded, provide all required conduit, boxes, wiring, connectors, hardware, supports, trims, accessories, etc. as necessary for a complete operating system.

F. Provide products suitable to withstand normal handling, installation, and service without any damage, distortion, corrosion, fading, discoloring, etc.

G. Recessed Luminaires:
   1. Ceiling Compatibility: Comply with NEMA LE 4.
   2. Luminaires Recessed in Insulated Ceilings: Listed and labeled as IC-rated, suitable for direct contact with insulation and combustible materials.
   3. Luminaires Recessed in Sloped Ceilings: Provide suitable sloped ceiling adapters.
   4. Air-Handling Recessed Fluorescent Luminaires: Suitable for air supply/return, heat removal, or combination as indicated.

H. Hazardous (Classified) Location Luminaires: Listed and labeled as complying with UL 844 for the classification of the installed location.

I. LED Luminaires:
   1. Components: UL 8750 recognized or listed as applicable.
   2. Tested in accordance with IES LM-79 and IES LM-80.
   3. LED Estimated Useful Life: Minimum of 50,000 hours at 70 percent lumen maintenance, calculated based on IES LM-80 test data.

J. LED Luminaire Components: UL 8750 recognized or listed as applicable.

2.03 EMERGENCY LIGHTING UNITS

A. Description: Emergency lighting units complying with NFPA 101 and all applicable state and local codes, and listed and labeled as complying with UL 924.

B. Operation: Upon interruption of normal power source or brownout condition exceeding 20 percent voltage drop from nominal, solid-state control automatically switches connected lamps to integral battery power for minimum of 90 minutes of rated emergency illumination, and automatically recharges battery upon restoration of normal power source.

C. Battery:
   1. Sealed maintenance-free nickel cadmium unless otherwise indicated.
   2. Size battery to supply all connected lamps, including emergency remote heads where indicated.

D. Diagnostics: Provide power status indicator light and accessible integral test switch to manually activate emergency operation.

E. Provide low-voltage disconnect to prevent battery damage from deep discharge.

F. Accessories:
   1. Provide compatible accessory mounting brackets where indicated or required to complete installation.
   2. Provide compatible accessory high impact polycarbonate vandal shields where indicated.
   3. Provide compatible accessory wire guards where indicated.
   4. Where indicated, provide emergency remote heads that are compatible with the emergency lighting unit they are connected to and suitable for the installed location.

2.04 EXIT SIGNS

A. Description: Exit signs and similar signs for special purpose applications such as area of refuge/rescue assistance.

B. All Exit Signs: Internally illuminated with LEDs; complying withall applicable local and state codes, and listed and labeled as complying with UL 924.

C. Self-Powered Exit Signs:

1. Operation: Upon interruption of normal power source or brownout condition exceeding 20 percent voltage drop from nominal, solid-state control automatically switches connected lamps to integral battery power for minimum of 90 minutes of rated emergency illumination, and automatically recharges battery upon restoration of normal power source.
2. Battery: Sealed maintenance-free nickel cadmium unless otherwise indicated.
3. Diagnostics: Provide power status indicator light and accessible integral test switch to manually activate emergency operation.
4. Provide low-voltage disconnect to prevent battery damage from deep discharge.

D. Accessories:
1. Provide compatible accessory wire guards where indicated.

2.05 DRIVERS

A. Manufacturers:
1. Alloy LED; _____; www.alloyled.com/#sle.
2. General Electric Company/GE Lighting: www.gelighting.com/#sle.
3. Lutron Electronics Company, Inc; www.lutron.com/#sle.
4. OSRAM Sylvania, Inc; _____: www.osram.us/ds/#sle.
5. Philips Lighting North America Corporation; _____; www.usa.lighting.philips.com/#sle.
6. Substitutions: See Section 016000 - Product Requirements.
7. Manufacturer Limitations: Where possible, for each type of luminaire provide ballasts produced by a single manufacturer.

B. LED Drivers:
1. Dimming Range: Continuous dimming from 100 percent to five percent relative light output unless dimming capability to lower level is indicated, without flicker.
2. Control Compatibility: Fully compatible with the dimming controls to be installed.

2.06 LAMPS

A. Manufacturers:
1. General Electric Company/GE Lighting: www.gelighting.com/#sle.
2. Osram Sylvania: www.sylvania.com/#sle.
3. Philips Lighting North America Corporation; _____; www.usa.lighting.philips.com/#sle.
4. Cree, Inc: www.cree.com.
5. Technical Consumer Products, Inc: www.tcpi.com.
6. Green Creative, LLC: www.gc-lighting.com.
7. Substitutions: See Section 016000 - Product Requirements.
8. Manufacturer Limitations: Where possible, provide lamps produced by a single manufacturer.

B. Lamps - General Requirements:
1. Provide new, compatible, operable LED lamps in each luminaire.
2. Verify compatibility of specified lamps with luminaires to be installed. Where lamps are not specified, provide lamps per luminaire manufacturer's recommendations.
3. Minimum Efficiency: Provide lamps complying with all current applicable federal and state lamp efficiency standards.
4. Color Temperature Consistency: 4000K for each type of LED lamp. Furnish products which are consistent in perceived color temperature. Replace lamps that are determined by the Architect to be inconsistent in perceived color temperature.

2.07 ACCESSORIES

A. Stems for Suspended Luminaires: Steel tubing, factory finished to match luminaire or field-painted as directed.

B. Threaded Rods for Suspended Luminaires: Zinc-plated steel, field-painted as directed.

C. Provide accessory plaster frameswhere indicated.

PART 3 EXECUTION

3.01 EXAMINATION

A. Verify that field measurements are as indicated.

B. Verify that outlet boxes are installed in proper locations and at proper mounting heights and are properly sized to accommodate conductors in accordance with NFPA 70.

C. Verify that suitable support frames are installed where required.

D. Verify that branch circuit wiring installation is completed, tested, and ready for connection to luminaires.

E. Verify that conditions are satisfactory for installation prior to starting work.

3.02 PREPARATION

A. Provide extension rings to bring outlet boxes flush with finished surface.

B. Clean dirt, debris, plaster, and other foreign materials from outlet boxes.

3.03 INSTALLATION

A. Coordinate locations of outlet boxes provided under Section 260533.16 as required for installation of luminaires provided under this section.

B. Perform work in accordance with NECA 1 (general workmanship).

C. Install products in accordance with manufacturer's instructions.

D. Install luminaires securely, in a neat and workmanlike manner, as specified in NECA 500 (commercial lighting) and NECA 502 (industrial lighting).

E. Provide required support and attachment in accordance with Section 260529.

F. Install luminaires plumb and square and aligned with building lines and with adjacent luminaires.

G. Suspended Ceiling Mounted Luminaires:
   1. Do not use ceiling tiles to bear weight of luminaires.
   2. Do not use ceiling support system to bear weight of luminaires unless ceiling support system is certified as suitable to do so.
   3. Secure surface-mounted and recessed luminaires to ceiling support channels or framing members or to building structure.
   4. Secure pendant-mounted luminaires to building structure.
   5. Secure lay-in luminaires to ceiling support channels using listed safety clips at four corners.
   6. See appropriate Division 9 section where suspended grid ceiling is specified for additional requirements.

H. Recessed Luminaires:
   1. Install trims tight to mounting surface with no visible light leakage.
   2. Non-IC Rated Luminaires: Maintain required separation from insulation and combustible materials according to listing.
   3. Luminaires Recessed in Fire-Rated Ceilings: Install using accessories and firestopping materials to meet regulatory requirements for fire rating.

I. Suspended Luminaires:
   1. Unless otherwise indicated, specified mounting heights are to bottom of luminaire.
   2. Install using the suspension method indicated, with support lengths and accessories as required for specified mounting height.
   3. Provide minimum of two supports for each luminaire equal to or exceeding 4 feet nominal length, with no more than 4 feet between supports.
   4. Install canopies tight to mounting surface.

5. Support pendants from swivel hangers.

J. Wall-Mounted Luminaires: Unless otherwise indicated, specified mounting heights are to center of luminaire.

K. Install accessories furnished with each luminaire.

L. Bond products and metal accessories to branch circuit equipment grounding conductor.

M. Air Handling Luminaires: Interface with air handling accessories furnished and installed under Section 233600.

N. Emergency Lighting Units:
1. Connect unit to unswitched power from circuit indicated. Bypass local switches, contactors, or other lighting controls.

O. Exit Signs:
1. Connect unit to unswitched power from circuit indicated. Bypass local switches, contactors, or other lighting controls.

P. Identify luminaires connected to emergency power system in accordance with Section 260553.

Q. Install lamps in each luminaire.

R. Lamp Burn-In: Operate lamps at full output for prescribed period per manufacturer's recommendations prior to use with any dimming controls. Replace lamps that fail prematurely due to improper lamp burn-in.

3.04 FIELD QUALITY CONTROL

A. See Section 014000 - Quality Requirements, for additional requirements.

B. Inspect each product for damage and defects.

C. Operate each luminaire after installation and connection to verify proper operation.

D. Test self-powered exit signs and emergency lighting units to verify proper operation upon loss of normal power supply.

E. Correct wiring deficiencies and repair or replace damaged or defective products. Repair or replace excessively noisy ballasts as determined by Architect.

3.05 ADJUSTING

A. Aim and position adjustable luminaires to achieve desired illumination as indicated or as directed by Architect. Secure locking fittings in place.

B. Aim and position adjustable emergency lighting unit lamps to achieve optimum illumination of egress path as required or as directed by Architect or authority having jurisdiction.

C. Air-Handling Luminaires with Air Control Blades or Heat Removal Dampers: Adjust as indicated or as required for proper airflow as directed by Architect.

D. Exit Signs with Field-Selectable Directional Arrows: Set as indicated or as required to properly designate egress path as directed by Architect or authority having jurisdiction.

3.06 CLEANING

A. Clean surfaces according to manufacturer's instructions to remove dirt, fingerprints, paint, or other foreign material and restore finishes to match original factory finish.

3.07 CLOSEOUT ACTIVITIES

A. Demonstration: Demonstrate proper operation of luminaires to Architect, and correct deficiencies or make adjustments as directed.

B. Just prior to Substantial Completion, replace all lamps that have failed.

3.08 PROTECTION

A. Protect installed luminaires from subsequent construction operations.

END OF SECTION 265100

SECTION 271000
STRUCTURED CABLING

PART 1 GENERAL

1.01 SECTION INCLUDES

A. Communications system design requirements.

B. Communications pathways.

C. Copper cable and terminations.

D. Communications equipment room fittings.

E. Communications outlets.

F. Communications grounding and bonding.

G. Communications identification.

1.02 RELATED REQUIREMENTS

A. Section 078400 - Firestopping.

B. Section 087100 - Door Hardware - Wiring for Access Control device homerun to data rack.

C. Section 260526 - Grounding and Bonding for Electrical Systems.

D. Section 260529 - Hangers and Supports for Electrical Systems.

E. Section 260533.23 - Surface Raceways.

F. Section 260536 - Cable Trays for Electrical Systems.

G. Section 260533.16 - Boxes for Electrical Systems.

H. Section 260553 - Identification for Electrical Systems: Identification products.

I. Section 262726 - Wiring Devices.

J. Section 270533.13 - Conduit for Communications Systems.

K. Section 337119 - Electrical Underground Ducts, Ductbanks, and Manholes.

1.03 REFERENCE STANDARDS

A. EIA/ECA-310 - Cabinets, Racks, Panels, and Associated Equipment.

B. FM (AG) - FM Approval Guide.

C. ICEA S-83-596 - Indoor Optical Cable.

D. ICEA S-90-661 - Category 3 and 5E Individually Unshielded Twisted Pairs, Indoor Cables (With or Without an Overall Shield) for Use in General Purpose and LAN Communication Wiring Systems.

E. NECA/BICSI 568 - Standard for Installing Commercial Building Telecommunications Cabling.

F. NFPA 70 - National Electrical Code.

G. TIA-455-21 - FOTP-21 - Mating Durability of Fiber Optic Interconnecting Devices.

H. TIA-492AAAA - Detail Specification for 62.5-um Core Diameter/125-um Cladding Diameter Class Ia Graded-Index Multimode Optical Fibers.

I. TIA-492AAAB - Detail Specification for 50-um Core Diameter/125-um Cladding Diameter Class Ia Graded-Index Multimode Optical Fibers.

J. TIA-492CAAB - Detail Specification for Class IVa Dispersion-Unshifted Single-Mode Optical Fibers with Low Water Peak.

K. TIA-526-14 - Optical Power Loss Measurement of Installed Multimode Fiber Cable Plant; IEC 61280-4.1 Edition 3.1, Fiber Optic Communications Subsystem Test Procedures- Part 4-1: Installed Cable Plant- Multimode Attenuation Measurement.

L. TIA-568 (SET) - Commercial Building Telecommunications Cabling Standard Set.

M. TIA-568.2 - Balanced Twisted-Pair Telecommunications Cabling and Components Standards.

N. TIA-568.3 - Optical Fiber Cabling and Components Standard.

O. TIA-569 - Telecommunications Pathways and Spaces.

P. TIA-598 - Optical Fiber Cable Color Coding.

Q. TIA-606 - Administration Standard for Telecommunications Infrastructure.

R. TIA-607 - Telecommunications Bonding and Grounding (Earthing) for Customer Premises.

S. UL (DIR) - Online Certifications Directory.

T. UL 444 - Communications Cables.

U. UL 514C - Nonmetallic Outlet Boxes, Flush-Device Boxes, and Covers.

V. UL 1651 - Fiber Optic Cable.

W. UL 1863 - Communications-Circuit Accessories.

1.04 ADMINISTRATIVE REQUIREMENTS

A. Coordination:
   1. Coordinate requirements for service entrance and entrance facilities with Owner.
   2. Coordinate the work with other trades to avoid placement of other utilities or obstructions within the spaces dedicated for communications equipment.
   3. Coordinate arrangement of communications equipment with the dimensions and clearance requirements of the actual equipment to be installed.
   4. Notify Architect of any conflicts with or deviations from Contract Documents. Obtain direction before proceeding with work.

B. Preinstallation Meeting: Convene two weeks prior to commencing work of this section to review service requirements and details with Communications Service Provider representative.

1.05 SUBMITTALS

A. See Section 013000 - Administrative Requirements, for submittal procedures.

B. Product Data: Provide manufacturer's standard catalog pages and data sheets for each product.

C. Shop Drawings: Show compliance with requirements on isometric schematic diagram of network layout, showing cable routings, telecommunication closets, rack and enclosure layouts and locations, service entrance, and grounding, prepared and approved by BICSI Registered Communications Distribution Designer (RCDD).

D. Evidence of qualifications for installer.

E. Test Plan: Complete and detailed plan, with list of test equipment, procedures for inspection and testing, and intended test date; submit at least 10 days prior to intended test date.

F. Field Test Reports.

G. Operation and Maintenance Data: List of all components with part numbers, sources of supply, and operation and maintenance instructions; include copy of project record documents.
   1. Supervisors and installers factory certified by manufacturers of products to be installed.

1.06 DELIVERY, STORAGE, AND HANDLING

A. Store products in manufacturer's unopened packaging until ready for installation.

B. Keep stored products clean and dry.

PART 2 PRODUCTS

2.01 SYSTEM DESIGN

A. Provide a complete permanent system of cabling and pathways for voice and data communications, including cables, conduits and wireways, pull wires, support structures, enclosures and cabinets, and outlets.
   1. Comply with TIA-568 (SET) (cabling) and TIA-569 (pathways) (commercial standards).
   2. Provide fixed cables and pathways that comply with NFPA 70 and TIA-607 and are UL listed or third party independent testing laboratory certified.
   3. Provide connection devices that are rated for operation under conditions of 32 to 140 degrees F at relative humidity of 0 to 95 percent, noncondensing.
   4. In this project, the term plenum is defined as return air spaces above ceilings, inside ducts, under raised floors, and other air-handling spaces.
   5. Limit data cable lengths to 300 feet maximum.

B. Main Distribution Frame (MDF): Centrally located support structure for terminating horizontal cables that extend to telecommunications outlets and backbone cables that extend to intermediate distribution frames (IDFs), functioning as point of presence to external service.
   1. For the entire campus there is one main distribution frame and for each building there is a building distribution frame (BDF) that functions as the main distribution frame (MDF) for that building.
   2. Locate main distribution frame as indicated on the drawings.
   3. Capacity: As required to terminate all cables required by design criteria plus minimum 25 percent spare space.

C. Intermediate Distribution Frames (IDF): Support structures for terminating horizontal cables that extend to telecommunications outlets.
   1. Locate intermediate distribution frames as indicated on the drawings.

D. Backbone Cabling: Cabling, pathways, and terminal hardware connecting intermediate distribution frames (IDF's) with main distribution frame (MDF), wired in star topology with main distribution frame at center hub of star.

E. Cabling to Outlets: Specified horizontal cabling, wired in star topology to distribution frame located at center hub of star; also referred to as "links".

2.02 PATHWAYS

A. Conduit: See section 270533.13.
   1. Exposed plenum rated cable is acceptable above accessible ceilings.

2.03 COPPER CABLE AND TERMINATIONS

A. Copper Horizontal Cable:
   1. Description: 100 ohm, balanced twisted pair cable complying with TIA-568.2 and listed and labeled as complying with UL 444.
   2. Cable Type - Voice, Access Control and Data: TIA-568.2 Category 6 UTP (unshielded twisted pair); 23 AWG.
   3. Cable Capacity: 4-pair.
   4. Cable Applications: Use listed NFPA 70 Type CMP plenum cable in all locations.
   5. Cable Jacket Color - Voice and Data Cable: Blue.
   6. Owner preferred product: Berk-Tek Products

B. Copper Cable Terminations: Insulation displacement connection (IDC) type using appropriate tool; use screw connections only where specifically indicated.

C. Jacks and Connectors: Modular RJ-45, non-keyed, terminated with 110-style insulation displacement connectors (IDC); high impact thermoplastic housing; suitable for and complying with same standard as specified horizontal cable; UL 1863 listed.
   1. Performance: 500 mating cycles.
   2. Voice and Data Jacks: 4-pair, pre-wired to T568B configuration.

3. Manufacturers:
    a. Leviton Manufacturing Company, Inc: www.leviton.com.
    b. Panduit Corp: www.panduit.com.
    c. Substitutions: Not permitted.

D. Copper Patch Cords:
1. Description: Factory-fabricated 4-pair cable assemblies with 8-position modular connectors terminated at each end.

2.04 COMMUNICATIONS EQUIPMENT ROOM FITTINGS

A. Copper Cross-Connection Equipment:
1. No type type 110 termination patch panels.
2. Patch Panels for Copper Cabling:
    a. Patch panel, rack mounted 19 inch wide, 24 port, TIA/EIA 568B.
        1) Leviton Model 49255-H24
        2) Panduit Model NKMP24Y
    b. Patch panel, rack mounted 19 inch wide, 48 port, TIA/EIA 568B.
        1) Leviton Model 49255-H48
        2) Panduit Model NKMP48Y
    c. Horizontal cable management:
        1) Panduit Model CMPH1
        2) One required for every 24 or 48 port patch panel installed.
3. Jacks for Copper Cabling Patch Panels:
    a. Telephone Jack, RJ11, USOC jack.
        1) Leviton Model QuickPort 41106-RI6.
        2) Panduit Model NetKey NK966MEI.
    b. Data Jack, RJ45 TIA/EIA 568A CAT6e jack.
        1) Leviton Model QuickPort 5G108-RL5
        2) Panduit Model NetKey NK6TMGR
        3) Data jack shall be wired using the 568B color code.
    c. Data Jack, RJ45 TIA/EIA 568A CAT6e jack.
        1) Leviton Model QuickPort 61110-RV6
        2) Panduit Model NetKey NK688MBU
        3) Data jack shall be wired using the 568B color code.
4. Capacity: Provide ports sufficient for cables to be terminated plus 25 percent spare.
5. Provide incoming cable strain relief and routing guides on back of panel.

B. Backboards: Interior grade plywood without voids, 3/4 inch thick; UL-labeled fire-retardant.
1. Size: As indicated on drawings.
2. Do not paint over UL label.

2.05 COMMUNICATIONS OUTLETS

A. Outlet Boxes: Comply with Section 260533.16.
1. Provide depth as required to accommodate cable manufacturer's recommended minimum conductor bend radius.
2. Minimum Size, Unless Otherwise Indicated:
    a. Voice Only Outlets: 4-11/16 inch square by 2-1/8 inch deep (119 by 54mm) trade size.
    b. Data or Combination Voice/Data Outlets: 4-11/16 inch square by 2-1/8 inch deep (119 by 54mm) trade size.
    c. Fiber Optic Outlets: 4-11/16 inch square by 2-1/8 inch deep (119 by 54 mm) trade size.

B. Surface Mount Boxes:
1. Comply with system design standards and UL 514C.
2. Accepts modular jacks/inserts.

3. Surface Mount Boxes Material/Finish: Match wiring device and wall plate finishes specified in Section 262726.
4. Product(s):
    a. Telephone and Data, surface mounted box, two-port surface housing:
        1) Leviton Model QuickPort 41089-2xP.
        2) Panduit Model NetKey NK2BXxx-A.

C. Wall Plates:
1. Comply with system design standards and UL 514C.
2. Accepts modular jacks/inserts.
3. Wall Plate Material/Finish - Flush-Mounted Outlets: Match wiring device and wall plate finishes specified on the drawings.
4. Product(s):
    a. Metal Wall Plate, telephone only, wall mounted 6-conductor RJ-11 Jack:
        1) Leviton Model 4108W-SP.
    b. High Impact Thermoplastic Wall Plate, telephone or data, flush mounted, single port:
        1) Leviton Model QuickPort 41080-1xP.
        2) Panduit Model NetKey NK1FNxx.
    c. High Impact Thermoplastic Wall Plate, telephone or data, flush mounted, duplex port:
        1) Leviton Model QuickPort 41080-2xP.
        2) Panduit Model NetKey NK2FNxx.
    d. High Impact Thermoplastic Wall Plate, telephone or data, flush mounted, quad port:
        1) Leviton Model QuickPort 41080-4xP.
        2) Panduit Model NetKey NK4FNxx.

2.06 GROUNDING AND BONDING COMPONENTS

A. Comply with TIA-607.

B. Comply with Section 260526.

2.07 IDENTIFICATION PRODUCTS

A. Comply with TIA-606.

B. Comply with Section 260553.

2.08 SOURCE QUALITY CONTROL

A. See Section 014000 - Quality Requirements, for additional requirements.

B. Factory test cables according to TIA-568 (SET).

PART 3 EXECUTION

3.01 INSTALLATION - GENERAL

A. Comply with latest editions and addenda of TIA/EIA-568, TIA/EIA-569, ANSI/J-STD-607, NFPA 70, and SYSTEM REQUIREMENTS as specified in PART 2.

B. Comply with Communication Service Provider requirements.

C. Grounding and Bonding: Perform in accordance with TIA-607 and NFPA 70.

D. Install firestopping to preserve fire resistance rating of partitions and other elements, using materials and methods specified in Section 078400.

3.02 INSTALLATION OF PATHWAYS

A. Install pathways with the following minimum clearances:
1. 48 inches from motors, generators, frequency converters, transformers, x-ray equipment, and uninterruptible power systems.
2. 12 inches from power conduits and cables and panelboards.
3. 5 inches from fluorescent and high frequency lighting fixtures.
4. 6 inches from flues, hot water pipes, and steam pipes.

B. Outlet Boxes:
   1. Coordinate locations of outlet boxes provided under Section 260533.16 as required for installation of telecommunications outlets provided under this section.
      a. Mounting Heights: Unless otherwise indicated, as follows:
         1) Data Outlets: 30 inches above finished floor.
         2) Telephone Outlets for Wall-Mounted Telephones: 54 inches above finished floor to top of telephone.
      b. Orient outlet boxes for vertical installation of wiring devices unless otherwise indicated.
      c. Provide minimum of 24 inches horizontal separation between flush mounted outlet boxes installed on opposite sides of fire rated walls.
      d. Provide separate outlet boxes for line voltage and low voltage devices.
      e. Locate outlet boxes so that wall plate does not span different building finishes.
      f. Locate outlet boxes so that wall plate does not cross masonry joints.

3.03 INSTALLATION OF EQUIPMENT AND CABLING

A. Cabling:
   1. Do not bend cable at radius less than manufacturer's recommended bend radius; for unshielded twisted pair use bend radius of not less than 4 times cable diameter.
   2. Do not over-cinch or crush cables.
   3. Do not exceed manufacturer's recommended cable pull tension.
   4. When installing in conduit, use only lubricants approved by cable manufacturer and do not chafe or damage outer jacket.
   5. Cabling should conform to the MDF/IDF boundaries as shown on the telecommunication overlay on District's drawing.

B. Service Loops (Slack or Excess Length): Provide the following minimum extra length of cable, looped neatly:
   1. At Distribution Frames: 120 inches.
   2. At Outlets - Copper: 12 inches.

C. Copper Cabling:
   1. Category 5e and Above: Maintain cable geometry; do not untwist more than 1/2 inch from point of termination.
   2. For 4-pair cables in conduit, do not exceed 25 pounds pull tension.
   3. Use T568B wiring configuration.

D. Floor-Mounted Enclosures: Connect adjacent cabinets together and remove interior side panels.

E. Identification:
   1. Use wire and cable markers to identify cables at each end.
   2. Use manufacturer-furnished label inserts, identification labels, or engraved wallplate to identify each jack at communications outlets with unique identifier.
   3. Use identification nameplate to identify cross-connection equipment, equipment racks, and cabinets.

3.04 FIELD QUALITY CONTROL

A. See Section 014000 - Quality Requirements, for additional requirements.

B. Comply with inspection and testing requirements of specified installation standards.

C. Visual Inspection:
   1. Inspect cable jackets for certification markings.
   2. Inspect cable terminations for color coded labels of proper type.
   3. Inspect outlet plates and patch panels for complete labels.
   4. Inspect patch cords for complete labels.

D. Testing - Copper Cabling and Associated Equipment:

1. Test operation of shorting bars in connection blocks.
2. Voice Cabling Links: Test each pair for short circuit continuity, short to ground, crosses, reversed polarity, operational and ring-back, and dial tone.
3. Category 5e and Above Links: Perform tests for wire map, length, attenuation, NEXT, and propagation delay.

E. Final Testing: After all work is complete, including installation of telecommunications outlets, and telephone dial tone service is active, test each voice jack for dial tone.

3.05 ENCODED IDENTIFICATION

A. Cabling originating from a MDF or IDF closet shall be designated as follows and as shown in the tables below:
1. Jack designators are six characters long.
   a. The first two characters are the building code.
   b. The third character identifies the wiring closet the cable originates in, in that building.
   c. The final three characters identify the physical cable count using the data cabling in the closet as the numbering guide.
2. Multiple data cables run into a single face plate will all be numbered with the open cable number and affixed a suffix starting with the letter E. (e.g. SMM101E, SMM101F, SM101G, etc.)
   a. The voice/data faceplate in the room will reflect the whole designation.
   b. The 66 connection block will only be marked with the closet voice cable count.
   c. The data patch panel will be marked reflecting only the numeric cable count and any suffix applied to that cable.
3. Building Codes Table:

Administration	AD	McKelvey	MC
Barretts	BA	North High	NH
Bellerive	BE	Northeast Middle	NE
Carman Trails	CT	Oak Brook	OB
Central High	CH	Pierremont	PI
Central Middle	CM	River Bend	RB
Claymont	CL	Ross	RO
Craig	CR	Shenandoah Valley	SV
Early Childhood Ctr	EC	Sorrento Springs	SS
District Operations	FA	South High	SH
Fern Ridge	FR	South Middle	SM
Green Trails	GT	Southwest Middle	SW
Hanna Woods	HW	Transportation	TR
Henry	HE	West High	WH
Highcroft Ridge	HR	West Middle	WM
ISC	IS	Wren Hollow	WR
Mason Ridge	MR		

4. Wiring Closet Code Table:

MDF or BDF Closet	M
Closet A	A
Closet B	B
Closet C	C
Closet D	D

etc. thru Z	etc. thru Z

5. Multiple Cables to Same Space Suffix Table:

1st cable to space	E
2nd cable to space	F
3rd cable to space	G
4th cable to space	H
5th cable to space	I
etc. through 22nd cable to space	etc. through Z

B. Satellite IDF's (mini-IDF's which are sub-fed from primary MDF or IDF closets) which contain only data cabling shall be labeled on the network equipment rack with the room number that the MDF or primary IDF is located in (and vice versa) and be lettered sequentially from the patch panel starting with the letter "A". If, more the 26 cables terminate in a satellite IDF the 27th cable shall be labeled as "AA" and continue through to "ZZ" as needed.

END OF SECTION 271000

SECTION 275116
PUBLIC ADDRESS AND INTERCOM SYSTEMS

PART 1 GENERAL

1.01 SECTION INCLUDES

A. Amplifier and control equipment.

B. Input equipment.

C. Reproducer equipment.

D. Sound system cable.

E. Intercom equipment.

F. Intercom cable.

G. Accessories.

1.02 RELATED REQUIREMENTS

A. Section 078400 - Firestopping.

B. Section 260519 - Low-Voltage Electrical Power Conductors and Cables (600 V and Less).

C. Section 260526 - Grounding and Bonding for Electrical Systems.

D. Section 260533.16 - Boxes for Electrical Systems.

1.03 REFERENCE STANDARDS

A. NFPA 70 - National Electrical Code.

1.04 SYSTEM DESCRIPTION

A. Public address and Intercom system for voice and music.

B. Features:

1. Two-way paging between main unit and classrooms .
2. Emergency paging override.
3. Distribution of background music.
4. Selective speaker talkback.

1.05 SUBMITTALS

A. See Section 013000 - Administrative Requirements, for submittal procedures.

B. Product Data: Provide manufacturer's standard data sheets for each item of equipment.

1.06 QUALITY ASSURANCE

A. Comply with requirements of NFPA 70 and Federal Communications Commission.

B. Products: Listed, classified, and labeled as suitable for the purpose intended.

C. Product Listing Organization Qualifications: An organization recognized by OSHA as a Nationally Recognized Testing Laboratory (NRTL) and acceptable to authorities having jurisdiction.

PART 2 PRODUCTS

2.01 MANUFACTURERS

A. Rauland-Borg Corp.: www.rauland.com

1. Local Contact: Andy Ernstein, O: 314-880-9983, C: 913-579-1900,
   Email: aernstein@primary-systems.com

B. Substitutions: Not permitted.

2.02 COMPONENTS

A. Speakers:

1. Product:

a. Classrooms: Rauland Model ACC1402 or current Rauland updated model (includes baffle only).
b. Hallways and Corridors: Rauland Model ACC1401 or current Rauland updated model (includes baffle only).

2. Substitutions: Not permitted.

B. Speaker Baffles, Backboxes, and Mounting Accessories:
1. Finish: White.
2. Product:
a. Rauland Backbox: Model ACC1101 or current Rauland updated model.
b. Rauland Support Bridge: Model ACC1104 or current Rauland updated model.
3. Substitutions: Not permitted.

C. Call Switches:
1. Product:
a. Rauland Model TCSPB1 or current Rauland updated model.
2. Substitutions: Not permitted.

D. Speaker Volume Control:
1. Product:
a. Rauland Model ACC1300 or current updated Rauland model.
2. Substitutions: Not permitted.

2.03 WIRE AND CABLE

A. Plenum Cable for Speaker Circuits: two twisted pair, #18 AWG copper conductor, 300 volt insulation, rated 200 degrees C, shielded and covered with a nonmetallic jacket; suitable for use for Class 2 circuits in air handling ducts, hollow spaces used as ducts, and plenums.
1. Manufacturer's:
a. Alpha Wire: www.alphawire.com.
b. Belden, Inc.: www.belden.com.
c. Berk-Tek: www.nexans.us.
d. General Cable Technologies Corp.: www.generalcable.com.
e. Panduit Corp.: www.panduit.com.
f. Superior Essex, Inc.: www.spsx.com.
g. Substitutions: See Section 016000 - Product Requirements.

PART 3 EXECUTION

3.01 INSTALLATION

A. Install in accordance with manufacturer's instructions.

B. Splice cable only in accessible junction boxes or at terminal block units.

C. Make cable shields continuous at splices and connect speaker circuit shield to equipment ground only at amplifier.

D. Install input circuits in separate cables and raceways from output circuits.

E. Leave 18 inches excess cable at each termination at microphone, volume pad, speaker, and other system outlet.

F. Leave 15 feet excess cable at each termination at system cabinet.

G. Provide protection for exposed cables where subject to damage.

H. Use cable in conduit for outside speaker circuits in accordance with Section 260534.

I. Support cables above accessible ceilings to keep them from resting on ceiling tiles. Use spring metal clips or plastic cable ties to support cables from structure for ceiling suspension system. Include bridle rings or drive rings.

J. Use suitable cable fittings and connectors.

K. Connect reproducers to amplifier with matching transformers.

L. Ground and bond equipment and circuits in accordance with Section 260526.

3.02 FIELD QUALITY CONTROL

A. See Section 014000 - Quality Requirements, for additional requirements.

B. Provide the services of manufacturer's technical representative to prepare and start system.
   1. Include making of final wiring connections, inspection and adjusting of completed installation, and systems demonstration.
   2. Certify that installation is complete and performs according to specified requirements.

C. Measure and record sound power levels at designated locations.

3.03 ADJUSTING

A. Adjust transformer taps for appropriate sound level.

B. Adjust devices and wall plates to be flush and level.

3.04 CLOSEOUT ACTIVITIES

A. See Section 017900 - Demonstration and Training, for additional requirements.

B. Demonstration: Demonstrate operation of system to Owner's personnel in each room affected.

END OF SECTION 275116

SECTION 281000
ACCESS CONTROL

PART 1 GENERAL

1.01 SECTION INCLUDES

A. Access control system requirements.

B. Access control software and hardware.

C. Access control point peripherals, including readers and keypads.

1.02 RELATED REQUIREMENTS

A. Section 087100 - Door Hardware: Electrically operated door hardware, for interface with access control system.

1.03 REFERENCE STANDARDS

A. NECA 1 - Standard for Good Workmanship in Electrical Construction.

B. NFPA 70 - National Electrical Code.

C. NFPA 101 - Life Safety Code.

D. UL 294 - Access Control System Units.

1.04 ADMINISTRATIVE REQUIREMENTS

A. Coordination:
   1. Coordinate the work with other installers to provide suitable door hardware as required for both access control functionality and code compliance.
   2. Coordinate the placement of readers with millwork, furniture, equipment, etc. installed under other sections or by others.
   3. Coordinate the work with other installers to provide power for equipment at required locations.
   4. Notify Architect of any conflicts with or deviations from Contract Documents. Obtain direction before proceeding with work.
   5. Contractor must contact manufacturer's representative to validate Assa Abloy hardware model parts string.
      a. Pat Arman - DH Pace, Inc
         1) Telephone: 314-781-5200
         2) Mobile: 314-220-6813
         3) Email: pat.arman@dhpace.com

B. Access Control Cloud Services:
   1. Subscription fees to be paid by Owner.

1.05 SUBMITTALS

A. See Section 013000 - Administrative Requirements, for submittal procedures.

B. Product Data: Provide manufacturer's standard catalog pages and data sheets for hardware components. Include ratings, configurations, standard wiring diagrams, dimensions, finishes, service condition requirements, and installed features.

C. Certify that proposed system design and components meet or exceed specified requirements.

1.06 QUALITY ASSURANCE

A. Comply with the following:
   1. NFPA 70.
   2. The requirements of the local authorities having jurisdiction.
   3. Applicable TIA/EIA standards.

B. Product Listing Organization Qualifications: An organization recognized by OSHA as a Nationally Recognized Testing Laboratory (NRTL) and acceptable to authorities having jurisdiction.

1.07 DELIVERY, STORAGE, AND HANDLING

A. Receive, inspect, handle, and store products in accordance with manufacturer's instructions.

B. Store products in manufacturer's unopened packaging, keep dry and protect from damage until ready for installation.

1.08 FIELD CONDITIONS

A. Maintain field conditions within manufacturer's required service conditions during and after installation.

1.09 WARRANTY

A. See Section 017800 - Closeout Submittals, for additional warranty requirements.

B. Provide minimum one year manufacturer warranty covering repair or replacement due to defective materials or workmanship.

PART 2 PRODUCTS

2.01 MANUFACTURERS

A. Access Control Software:
   1. Imron Corporation: Imron IS2000 V10 Security Management Software: www.imron.com

B. Substitutions: Not permitted.

2.02 ACCESS CONTROL SYSTEM REQUIREMENTS

A. Provide new access control system consisting of required equipment, conduit, boxes, wiring, connectors, hardware, supports, accessories, software, system programming, etc. as necessary for a complete operating system that provides the functional intent indicated.

B. System Battery Backup: Provide batteries/uninterruptible power supplies (UPS) as required for 24 hours full operation.

C. Access Control Points:
   1. See article "ACCESS CONTROL POINT PERIPHERALS" below for device descriptions.
   2. Door Number _____:
      a. Description: Proximity Card Access.
      b. Function: Operational and emergency.
      c. Access: Controlled entry, free exit.
      d. Peripherals on Secure Side:
         1) Reader/Keypad: Contactless smart card reader.
      e. Locking Device: Electric strike.
         1) Configuration: Fail-secure.
      f. Interface Requirements:
         1) Provide interface with fire alarm system to release door lock upon alarm.
         2) Provide interface with handicapped automatic door operator.

D. Interface with Other Systems:
   1. Provide products compatible with other systems requiring interface with access control system.
   2. Interface with electrically operated door hardware as specified in Section 087100 - Door Hardware.
      a. Capable of locking/unlocking/releasing controlled doors.
      b. Capable of receiving input from integral door hardware switches.

E. Provide products listed, classified, and labeled as suitable for the purpose intended.
   1. Access Control Units and Readers: Listed and labeled as complying with UL 294.

2.03 ACCESS CONTROL UNITS AND SOFTWARE

A. Provide access control units and software compatible with readers to be connected.

B. Unless otherwise indicated, provide software and licenses required for fully operational system.

2.04 ACCESS CONTROL POINT PERIPHERALS

A. Provide devices compatible with control units and software.

B. Provide devices suitable for operation under the service conditions at the installed location.

C. Readers and Keypads:
   1. General Requirements:
      a. Provide readers compatible with credentials to be used.
      b. Color: Black.

D. Door Locking Devices (Electric Strikes and Magnetic Locks): Comply with Section 087100 - Door Hardware.

PART 3 EXECUTION

3.01 EXAMINATION

A. Verify that field measurements are as indicated.

B. Verify that ratings and configurations of system components are consistent with the indicated requirements.

C. Verify that mounting surfaces are ready to receive system components.

D. Verify that branch circuit wiring installation is completed, tested, and ready for connection to system.

E. Verify that conditions are satisfactory for installation prior to starting work.

3.02 INSTALLATION

A. Install access control system in accordance with NECA 1 (general workmanship).

B. Install products in accordance with manufacturer's instructions.

C. Wiring Method: Unless otherwise indicated, use cables (not in conduit).
   1. Use suitable listed cables in wet locations, including underground raceways.
   2. Use suitable listed cables for vertical riser applications.
   3. Use listed plenum rated cables in spaces used for environmental air.
   4. Install wiring in conduit for the following:
      a. Where required for rough-in.
      b. Where required by authorities having jurisdiction.
      c. Where exposed to damage.
      d. Where installed outside the building.
      e. For exposed connections from outlet boxes to devices.
   5. Conduit: Comply with Section 260533.13.
   6. Conceal cables unless specifically indicated to be exposed.
   7. Use power transfer hinges complying with Section 087100 for concealed connections to door hardware.
   8. Cables in the following areas may be exposed, unless otherwise indicated:
      a. Equipment closets.
      b. Within joists in areas with no ceiling.
   9. Route exposed cables parallel or perpendicular to building structural members and surfaces.
   10. Do not exceed manufacturer's recommended maximum cable length between components.

D. Provide grounding and bonding in accordance with Section 260526 - Grounding and Bonding for Electrical Systems.

E. Install firestopping to preserve fire resistance rating of partitions and other elements, using materials and methods specified in Section 078400 - Firestopping

F. Identify system wiring and components in accordance with Section 260553 - Identification for Electrical Systems

3.03 FIELD QUALITY CONTROL

A. See Section 014000 - Quality Requirements, for additional requirements.

B. Provide services of a manufacturer's authorized representative to perform inspection and testing. Include manufacturer's detailed testing procedures and field reports with submittals.

C. Contact and include Owner when ready to prepare and start-up field hardware in accordance with manufacturer's instructions.

D. Program hardware parameters according to requirements of Owner.

E. Test for proper interface with other systems.

F. Correct defective work, adjust for proper operation, and retest until entire system complies with Contract Documents.

G. Submit detailed reports indicating inspection and testing results and corrective actions taken.

3.04 CLEANING

A. Clean exposed surfaces to remove dirt, paint, or other foreign material and restore to match original factory finish.

3.05 CLOSEOUT ACTIVITIES

A. See Section 017800 - Closeout Submittals, for closeout submittals.

B. Demonstration: Demonstrate proper operation of system to Owner, and correct deficiencies or make adjustments as directed.

C. Training: Train Owner's personnel on operation, adjustment, and maintenance of system.
   1. Use operation and maintenance manual as training reference, supplemented with additional training materials as required.
   2. Provide minimum of four hours of training.
   3. Instructor: Manufacturer's authorized representative.
   4. Location: At project site.

3.06 PROTECTION

A. Protect installed system components from subsequent construction operations.

3.07 MAINTENANCE

A. See Section 017000 - Execution and Closeout Requirements, for additional requirements relating to maintenance service.

END OF SECTION 281000

SECTION 282000
VIDEO SURVEILLANCE

PART 1 GENERAL

1.01 SECTION INCLUDES

A. Cameras.

B. Accessories.

1.02 RELATED REQUIREMENTS

A. Section 078400 - Firestopping.

B. Section 260526 - Grounding and Bonding for Electrical Systems.

C. Section 260529 - Hangers and Supports for Electrical Systems.

D. Section 260533.13 - Conduit for Electrical Systems.

E. Section 260535 - Surface Raceways

F. Section 260553 - Identification for Electrical Systems: Identification products and requirements.

G. Section 271005 - Structured Cabling for Voice and Data - Inside-Plant.

1.03 REFERENCE STANDARDS

A. NECA 1 - Standard for Good Workmanship in Electrical Construction.

B. NECA 303 - Standard for Installing and Maintaining Video Surveillance System.

C. NFPA 70 - National Electrical Code.

1.04 ADMINISTRATIVE REQUIREMENTS

A. Coordination:
   1. Coordinate the placement of cameras with structural members, ductwork, piping, equipment, luminaires, diffusers, fire suppression system components, and other potential conflicts installed under other sections or by others.
   2. Coordinate the work with other installers to provide power for cameras and equipment at required locations.
   3. Notify Architect of any conflicts with or deviations from Contract Documents. Obtain direction before proceeding with work.

1.05 SUBMITTALS

A. See Section 013000 - Administrative Requirements, for submittal procedures.

B. Product Data: Provide manufacturer's standard catalog pages and data sheets for each system component. Include ratings, configurations, standard wiring diagrams, dimensions, finishes, service condition requirements, and installed features.

1.06 QUALITY ASSURANCE

A. Comply with the following:
   1. NFPA 70.
   2. Applicable TIA/EIA standards.

B. Installer Qualifications: Company specializing in performing the work of this section with minimum three years documented experience with video surveillance systems of similar size, type, and complexity and providing contract maintenance service as a regular part of their business; authorized manufacturer's representative.

PART 2 PRODUCTS

2.01 CAMERAS

A. Manufacturers:
   1. Hanwha Techwin America:
      a. Indoor models:

1) XND-6080RV - 2 megapixel Network IR Dome Camera
b. Outdoor models:
1) XNV-8080R - 5 megapixel Vandal IR Dome Camera
c. Outdoor mounting accessories (supply one set with each outdoor camera unit):
1) Hanging housing model: SBP-300HM6.
2) Wall Bracket model: SBP-300B.
3) Wall Mount model: SBP-300WM1.
2. Substitutions: If manufacturer's existing installed models are no longer in production, submit equivalent manufacturer's model for approval.

B. Provide cameras and associated accessories suitable for operation under the service conditions at the installed location. Provide additional components (e.g. enclosures, heaters, blowers, etc.) as required.

C. Where not factory-installed, provide additional components (e.g. lenses, mounting accessories, etc.) as necessary for complete installation.

2.02 CABLE

A. Manufacturers:
1. Alpha Wire: www.alphawire.com.
2. Belden, Inc.: www.belden.com.
3. Berk-Tek: www.nexans.us.
4. General Cable Technologies Corp.: www.generalcable.com.
5. Panduit Corp.: www.panduit.com.
6. Superior Essex, Inc.: www.spsx.com.
7. Substitutions: See Section 016000 - Product Requirements.

B. Provide cables as indicated or as required for connections between system components.
1. Data Cables for IP Network Connections: TIA/EIA-568 Category 6 solid conductor unshielded twisted pair (UTP), 22 AWG, 4 individually twisted pairs; covered with yellow jacket and complying with all relevant parts of and addenda to latest edition of TIA/EIA-568 and UL 444.
a. In all locations, provide NFPA 70 type CMP plenum-rated cable only.

2.03 PATHWAYS

A. Conduit: As specified in Section 260533.13; provide pull cords in all conduit.
1. Exposed plenum rated cable is acceptable above accessible ceilings.

PART 3 EXECUTION

3.01 INSTALLATION

A. Install video surveillance system in accordance with NECA 1 (general workmanship) and NECA 303.

B. Install products in accordance with manufacturer's instructions.

C. Provide required support and attachment in accordance with Section 260529.

D. Wiring Method: Unless otherwise indicated, use plenum cables (not in conduit).
1. Use suitable listed cables for vertical riser applications.
2. Install wiring in conduit for the following:
a. Where required for rough-in.
b. Where required by authorities having jurisdiction.
c. Where exposed to damage.
d. Where installed outside the building.
e. For exposed connections from outlet boxes to cameras.
f. Conduit: Comply with Section 260533.13.
3. Conceal all cables unless specifically indicated to be exposed.
4. Cables in the following areas may be exposed, unless otherwise indicated:

a. Equipment closets.
b. Within joists in areas with no ceiling.

5. Route exposed cables parallel or perpendicular to building structural members and surfaces.
6. Include service loop cable lengths to allow relocation of cameras within 6 ft of installed location.

E. Provide grounding and bonding in accordance with Section 260526.

F. Install firestopping to preserve fire resistance rating of partitions and other elements, using materials and methods specified in Section 078400.

G. Identify system wiring and components in accordance with Section 260553.

3.02 FIELD QUALITY CONTROL

A. See Section 014000 - Quality Requirements, for additional requirements.

B. Prepare and start system in accordance with manufacturer's instructions.

C. Adjust cameras to provide desired field of view and produce suitable images under all service lighting conditions.

D. Program system parameters according to requirements of Owner.

E. Test for proper interface with other systems.

F. Correct defective work, adjust for proper operation, and retest until entire system complies with Contract Documents.

3.03 CLEANING

A. Clean exposed surfaces to remove dirt, paint, or other foreign material and restore to match original factory finish.

END OF SECTION 282000

SECTION 284600
FIRE DETECTION AND ALARM

PART 1 GENERAL

1.01 SECTION INCLUDES

A. Fire alarm system design and installation, including all components, wiring, and conduit.

B. Transmitters for communication with supervising station.

C. Does not include 120V power connections to fire alarm components.

D. Replacement and removal of existing fire alarm system components, wiring, and conduit indicated.

E. Section 083323 - Overhead Coiling Doors: Coiling fire doors to be released by fire alarm system.

F. Section 087100 - Door Hardware: Electrically operated locks and door holder devices to be monitored and released by fire alarm system.

G. Section 211300 - Fire-Suppression Sprinkler Systems: Supervisory, alarm, and actuating devices installed in sprinkler system.

H. Section 233300 - Air Duct Accessories: Smoke dampers monitored and controlled by fire alarm system.

1.02 REFERENCE STANDARDS

A. 36 CFR 1191 - Americans with Disabilities Act (ADA) Accessibility Guidelines for Buildings and Facilities; Architectural Barriers Act (ABA) Accessibility Guidelines.

B. ADA Standards - 2010 ADA Standards for Accessible Design.

C. IEEE C62.41.2 - IEEE Recommended Practice on Characterization of Surges in Low-Voltage (1000 V and Less) AC Power Circuits.

D. NFPA 70 - National Electrical Code.

E. NFPA 72 - National Fire Alarm and Signaling Code.

1.03 SUBMITTALS

A. See Section 013000 - Administrative Requirements, for submittal procedures.

B. Copies of design documents Submitted to Authorities Having Jurisdiction: Submit all information required for plan review and permitting by authorities having jurisdiction, including but not limited to floor plans, riser diagrams, and description of operation:
   1. Copy (if any) of list of data required by authority having jurisdiction.
   2. NFPA 72 "Record of Completion", filled out to the extent known at the time.
   3. Clear and concise description of operation, with input/output matrix similar to that shown in NFPA 72 Appendix A-7-5-2.2(9), and complete listing of software required.
   4. System zone boundaries and interfaces to fire safety systems.
   5. Location of all components, circuits, and raceways; mark components with identifiers used in control unit programming.
   6. Circuit layouts; number, size, and type of raceways and conductors; conduit fill calculations; spare capacity calculations; notification appliance circuit voltage drop calculations.
   7. List of all devices on each signaling line circuit, with spare capacity indicated.
   8. Manufacturer's detailed data sheet for each component, including wiring diagrams, installation instructions, and circuit length limitations.
   9. Air-Sampling Smoke Detection Systems: Include air-sampling pipe network layout with sampling ports identified; include calculations demonstrating compliance with specified requirements.

10. Description of power supplies; if secondary power is by battery include calculations demonstrating adequate battery power.
11. Certification by either the manufacturer of the control unit or by the manufacturer of each other component that the components are compatible with the control unit.
12. Certification by the manufacturer of the control unit that the system design complies with Contract Documents.
13. Certification by Contractor that the system design complies with Contract Documents.

C. Inspection and Test Reports:
1. Submit inspection and test plan prior to closeout demonstration.
2. Submit documentation of satisfactory inspections and tests.
3. Submit NFPA 72 "Inspection and Test Form," filled out.

D. Project Record Documents: See Section 017800 for additional requirements; have one set available during closeout demonstration:
1. Complete set of floor plans showing actual installed locations of components, conduit, and zones.
2. "As installed" wiring and schematic diagrams, with final terminal identifications.
3. "As programmed" operating sequences, including control events by device, updated input/output chart, and voice messages by event.

E. Closeout Documents:
1. Certification by manufacturer that the system has been installed in compliance with manufacturer's installation requirements, is complete, and is in satisfactory operating condition.
2. NFPA 72 "Record of Completion", filled out completely and signed by installer and authorized representative of authority having jurisdiction.

1.04 QUALITY ASSURANCE

A. Installer Qualifications: Contractor shall use ABF, Inc. as the installer. All work associated with the fire alarm shall be through the listed installer, including all conduit and wiring work.
1. Contact Information: Mike Wagner, O: 636-600-4705, E-mail: mikew@abfsecurity.com

PART 2 PRODUCTS

2.01 MANUFACTURERS

A. Edwards (A United Technologies Corporation Company): www.edwardsfiresafety.com

B. Substitutions: Not permitted.

2.02 FIRE ALARM SYSTEM

A. Fire Alarm System: Provide modifications and extensions to the existing automatic fire detection and alarm system:
1. Provide all components necessary, regardless of whether shown in Contract Documents or not.
2. Protected Premises: As shown on drawings.
3. Evacuation Alarm: General evacuation of entire premises.
4. Hearing Impaired Occupants: Provide visible notification devices in all public areas and in dwelling units.
5. Master Control Unit (Panel): Existing, See drawings for location.

B. Circuits:
1. Signaling Line Circuits (SLC): Match existing system.
2. Notification Appliance Circuits (NAC): Match existing system.

C. Spare Capacity:
1. When adding or relocating devices, add booster power supplies and control modules as necessary to maintain a fully operational fire alarm system.

D. Power Sources:

1. Primary: Dedicated branch circuits of the facility power distribution system.
2. Secondary: Storage batteries.
3. Capacity: Sufficient to operate entire system for period specified by NFPA 72.
4. Each Computer System: Provide uninterruptible power supply (UPS).

2.03 EXISTING COMPONENTS

A. Existing Fire Alarm System: Remove existing components indicated and incorporate remaining components into new system, under warranty as if they were new; do not take existing portions of system out of service until new portions are fully operational, tested, and connected to existing system.

B. Clearly label components that are "Not In Service."

C. Remove unused existing components and materials from site and dispose of properly.

2.04 FIRE SAFETY SYSTEMS INTERFACES

A. Supervision: Provide supervisory signals in accordance with NFPA 72.

B. Alarm: Provide alarm initiation in accordance with NFPA 72 for the following:
1. Sprinkler water flow.
2. Kitchen hood suppression activation; also disconnect fuel source from cooking equipment.
3. Elevator lobby, elevator hoistway, and elevator machine room smoke detectors.
4. All heat detectors.
5. All smoke detectors.

C. Elevators:
1. Elevator lobby, hoistway, and machine room smoke detectors: Elevator recall for fire fighters' service.
2. Elevator Machine Room Heat Detector: Shut down elevator power prior to hoistway sprinkler activation.
3. Sprinkler pressure or waterflow: Shut down elevator power prior to hoistway sprinkler activation.

D. HVAC:
1. Duct Smoke Detectors: Close dampers indicated; shut down air handlers indicated.

E. Doors:
1. Door Magnetic Holders: Release upon activation of smoke detectors on either side of door, upon alarm from all manual pull stations, and upon sprinkler activation.
2. Electromagnetic Door Locks on Egress Doors: Unlock upon activation of any alarm initiating device or suppression system in smoke zone that doors serve as egress from. Refer to Section 087100.
3. Overhead Coiling Fire Doors: Release upon activation of smoke detectors in smoke zone on either side of door, upon alarm from manual pull station on same floor, and upon sprinkler activation on same floor. Refer to Section 083323.

2.05 COMPONENTS

A. General:
1. Provide flush mounted units where installed in finish areas; in unfinished areas, surface mounted unit are acceptable.
2. Provide legible, permanent labels for each control device. See Section 260553 - Identification for Electrical Systems for labeling requirements.

B. Fire Alarm Control Units: Analog, addressable type; listed, classified, and labeled as suitable for the purpose intended.

C. Remote Annunciators: Match existing system.

D. Initiating Devices:
1. Addressable Systems:
a. Addressable Devices: Individually identifiable by addressable fire alarm control unit.

b. Provide suitable addressable interface modules as indicated or as required for connection to conventional (non-addressable) devices and other components that provide a dry closure output.

2. Manual Pull Stations: Match existing system.
3. Smoke Detectors: Match existing system.
4. Duct Smoke Detectors: Match existing system.
5. Heat Detectors: Match existing system.
6. Addressable Interface Devices: Match existing system.

E. Notification Appliances:
1. Strobes: Match existing system.
2. Combination Horn-Strobes: Match existing system

F. Circuit Conductors: Copper; color code and label per Section - Identification for Electrical Systems

G. Locks and Keys: Deliver keys to Owner.
1. Provide the same standard lock and key for each key operated switch and lockable panel and cabinet; provide 5 keys of each type

PART 3 EXECUTION

3.01 INSTALLATION

A. Install in accordance with applicable codes, NFPA 72, NFPA 70, and Contract Documents.

B. Conceal all wiring, conduit, boxes, and supports where installed in finished areas.

C. Obtain Owner's approval of locations of devices, before installation.

D. Install instruction cards and labels.

3.02 INSPECTION AND TESTING FOR COMPLETION

A. Notify Owner 7 days prior to beginning completion inspections and tests.

B. Notify authorities having jurisdiction and comply with their requirements for scheduling inspections and tests and for observation by their personnel.

C. Provide the services of the installer's supervisor or person with equivalent qualifications to supervise inspection and testing, correction, and adjustments.

D. Prepare for testing by ensuring that all work is complete and correct; perform preliminary tests as required.

E. Provide all tools, software, and supplies required to accomplish inspection and testing.

F. Perform inspection and testing in accordance with NFPA 72 and requirements of local authorities; document each inspection and test.

G. Correct defective work, adjust for proper operation, and retest until entire system complies with Contract Documents.

H. Diagnostic Period: After successful completion of inspections and tests, Operate system in normal mode for at least 14 days without any system or equipment malfunctions.
1. Record all system operations and malfunctions.
2. If a malfunction occurs, start diagnostic period over after correction of malfunction.
3. Owner will provide attendant operator personnel during diagnostic period; schedule training to allow Owner personnel to perform normal duties.
4. At end of successful diagnostic period, fill out and submit NFPA 72 "Inspection and Testing Form."

3.03 CLOSEOUT

A. Closeout Demonstration: Demonstrate proper operation of all functions to Owner.
1. Be prepared to conduct any of the required tests.

2. Have at least one copy of operation and maintenance data, preliminary copy of project record drawings, input/output matrix, and operator instruction chart(s) available during demonstration.
3. Have authorized technical representative of control unit manufacturer present during demonstration.
4. Demonstration may be combined with inspection and testing required by authority having jurisdiction; notify authority having jurisdiction in time to schedule demonstration.
5. Repeat demonstration until successful.

B. Occupancy of the project will not occur prior to Substantial Completion.

C. Substantial Completion of the project cannot be achieved until inspection and testing is successful and:
1. All aspects of operation have been demonstrated to Owner.
2. Final acceptance of the fire alarm system has been given by authorities having jurisdiction.
3. Occupancy permit has been granted.

END OF SECTION 284600

SECTION 312200
GRADING

PART 1 GENERAL

1.01 SECTION INCLUDES

A. Removal of topsoil.

B. Rough grading the site for pavements.

C. Replacement of topsoil and finish grading.

1.02 RELATED REQUIREMENTS

A. Section 311000 - Site Clearing.

B. Section 312316 - Excavation.

C. Section 312316.13 - Trenching: Trenching and backfilling for utilities.

D. Section 312323 - Fill: Filling and compaction.

E. Section 329223 - Sodding: Finish ground cover.

1.03 SUBMITTALS

A. Project Record Documents: Accurately record actual locations of utilities remaining by horizontal dimensions, elevations or inverts, and slope gradients.

PART 2 PRODUCTS

2.01 MATERIALS

A. Topsoil- Soil Type S2:
   1. Graded.
   2. Acidity range (pH) of 5.5 to 7.5.
   3. Containing a minimum of 4 percent and a maximum of 30 percent inorganic matter.
   4. Conforming to ASTM D2487 Group Symbol OL, OH, and PT.
   5. Limit decaying matter to 10 percent of total content by volume.
   6. Free of roots, rocks larger than 1/2 inch, subsoil, debris, large weeds and foreign matter.

PART 3 EXECUTION

3.01 EXAMINATION

A. Verify that survey bench mark and intended elevations for the Work are as indicated.

B. Verify the absence of standing or ponding water.

3.02 PREPARATION

A. Identify required lines, levels, contours, and datum.

B. Call Missouri One Call System at 1-800-DIG-RITE (1-800-344-7483) not less than two working days before performing Work.
   1. Request underground utilities to be located and marked within and surrounding construction areas.

C. Stake and flag locations of known private utilities.

D. Locate, identify, and protect from damage above- and below-grade utilities to remain.

E. Provide temporary means and methods to remove all standing or ponding water from areas prior to grading.

F. Protect site features to remain, including but not limited to bench marks, survey control points, existing structures, fences, sidewalks, paving, and curbs, from damage by grading equipment and vehicular traffic.

3.03 ROUGH GRADING

A. Remove topsoil from areas to be further excavated, re-landscaped, or re-graded.

B. Remove subsoil from areas to be further excavated, re-landscaped, or re-graded.

C. Do not remove wet subsoil , unless it is subsequently processed to obtain optimum moisture content.

D. When excavating through roots, perform work by hand and cut roots with sharp axe.

E. Stability: Replace damaged or displaced subsoil to same requirements as for specified fill.

F. Remove and replace soils deemed unsuitable by classification and which are excessively moist due to lack surface water control.

G. Level and contour surfaces to elevations and gradients indicated.

3.04 SOIL REMOVAL AND STOCKPILING

A. Remove excavated topsoil from site.

B. Stockpile subsoil to be re-used on site; remove remainder from site.

C. Stockpiles: Use areas designated on site; pile depth not to exceed 8 feet; protect from erosion.

3.05 FINISH GRADING

A. Before Finish Grading:
   1. Verify building and trench backfilling have been inspected.
   2. Verify subgrade has been contoured and compacted.

B. Remove debris, roots, branches, stones, in excess of 1 inch in size. Remove soil contaminated with petroleum products.

C. Where topsoil is to be placed, scarify surface to depth of 3 inches.

D. In areas where vehicles or equipment have compacted soil, scarify surface to depth of 6 inches.

E. Place topsoil in areas where sodding and planting are indicated.

F. Place topsoil where required to level finish grade.

G. Place topsoil to the following compacted thicknesses:
   1. Areas to be Sodded: 6 inches.

H. Place topsoil during dry weather.

I. Remove roots, weeds, rocks, and foreign material while spreading.

J. Near plants and buildings spread topsoil manually to prevent damage.

K. Fine grade topsoil to eliminate uneven areas and low spots. Maintain profiles and contour of subgrade.

L. Roll placed topsoil.

M. Maintain stability of topsoil during inclement weather. Replace topsoil in areas where surface water has eroded thickness below specifications.

3.06 TOLERANCES

A. Top Surface of Subgrade: Plus or minus 0.10 foot (1-3/16 inches) from required elevation.

B. Top Surface of Finish Grade: Plus or minus 0.04 foot (1/2 inch).

C. Top Surface of Finish Grade at Curbs and Sidewalks: Top of curb or sidewalk elevation or greater.

D. Top Surface of Finish Grade at Pavement Edges: Top of pavement elevation.

3.07 REPAIR AND RESTORATION

A. Existing Facilities, Utilities, and Site Features to Remain: If damaged due to this work, repair or replace to original condition at no cost to Owner.

B. Trees to Remain: If damaged due to this work, trim broken branches and repair bark wounds; if root damage has occurred, obtain instructions from Architect as to remedy.

C. Other Existing Vegetation to Remain: If damaged due to this work, replace with vegetation of equivalent species and size.

3.08 FIELD QUALITY CONTROL

A. See Section 312323 - Fill for compaction density testing.

3.09 CLEANING

A. Remove unused stockpiled subsoil. Grade stockpile area to prevent standing water.

B. Leave site clean and raked, ready to receive landscaping.

END OF SECTION 312200

SECTION 312316
EXCAVATION

PART 1 GENERAL

1.01 SECTION INCLUDES

A. Excavating for paving and site structures.

1.02 RELATED REQUIREMENTS

A. Section 017000 - Execution and Closeout Requirements: Project conditions; protection of bench marks, survey control points, and existing construction to remain; reinstallation of removed products; temporary bracing and shoring. General requirements for dewatering of excavations and water control.

B. Section 312200 - Grading: Grading.

C. Section 312316.13 - Trenching: Excavating for utility trenches outside the building to utility main connections.

D. Section 312323 - Fill: Fill materials, backfilling, and compacting.

1.03 PRICE AND PAYMENT PROCEDURES

A. See Section 012200 - Unit Prices, for general requirements applicable to unit prices for excavation.

B. Unit Price A : Excavating Unsuitable Soil Materials:
   1. Measurement method: By the cubic yard.
   2. Includes: Excavating below required elevations to remove unsuitable soil materials, loading and removing from site.
   3. Does Not Include Over-Excavation: Payment will not be made for over-excavated work nor for replacement materials.

C. See Section 312323 - Fill, for measurement and payment provisions related to fill.

PART 2 PRODUCTS

PART 3 EXECUTION

3.01 EXAMINATION

A. Verify that survey bench mark and intended elevations for the work are as indicated.

3.02 PREPARATION

A. Identify required lines, levels, contours, and datum locations.

B. Call Missouri One Call System at 1-800-DIG-RITE (1-800-344-7483) not less than two working days before performing Work.
   1. Request underground utilities to be located and marked within and surrounding construction areas.

C. Locate, identify, and protect utilities that remain and protect from damage.

D. Grade top perimeter of excavation to prevent surface water from draining into excavation. Provide temporary means and methods, as required, to maintain surface water diversion until no longer needed, or as directed by Architect.

3.03 EXCAVATING

A. Underpin adjacent structures that could be damaged by excavating work.

B. Excavate to accommodate new structures and construction operations.

C. Notify Architect of unexpected subsurface conditions and discontinue affected Work in area until notified to resume work.

D. Slope banks of excavations deeper than 4 feet to angle of repose or less until shored.

E. Do not interfere with 45 degree bearing splay of foundations.

F. Cut utility trenches wide enough to allow inspection of installed utilities.

G. Hand trim excavations. Remove loose matter.

H. Correct areas that are over-excavated and load-bearing surfaces that are disturbed; see Section 312323.

I. Provide temporary means and methods, as required, to remove all water from excavations until directed by Architect. Remove and replace soils deemed suitable by classification and which are excessively moist due to lack of dewatering or surface water control.

J. Determine the prevailing groundwater level prior to excavation. If the proposed excavation extends less than 1 foot into the prevailing groundwater, control groundwater intrusion with perimeter drains routed to sump pumps, or as directed by the Architect. If the proposed excavation extends more than 1 foot into the excavation, control groundwater intrusion with a comprehensive dewatering procedures, or as directed by the Geotechnical Engineer.

K. Remove excavated material that is unsuitable for re-use from site.

L. Stockpile excavated material to be re-used in area designated on site in accordance with Section 312200.

M. Remove excess excavated material from site.

3.04 FIELD QUALITY CONTROL

A. See Section 014000 - Quality Requirements, for general requirements for field inspection and testing.

B. Provide for visual inspection of load-bearing excavated surfaces by Architect before placement of foundations.

3.05 PROTECTION

A. Divert surface flow from rains or water discharges from the excavation.

B. Prevent displacement of banks and keep loose soil from falling into excavation; maintain soil stability.

C. Protect open excavations from rainfall, runoff, freezing groundwater, or excessive drying so as to maintain foundation subgrade in satisfactory, undisturbed condition.

D. Protect bottom of excavations and soil adjacent to and beneath foundation from freezing.

E. Keep excavations free of standing water and completely free of water during concrete placement.

END OF SECTION 312316

SECTION 312316.13
TRENCHING

PART 1 GENERAL

1.01 SECTION INCLUDES

A. Backfilling and compacting for utilities outside the building to utility main connections.

1.02 RELATED REQUIREMENTS

A. Section 312200 - Grading: Site grading.

B. Section 312316 - Excavation: Building and foundation excavating.

C. Section 312323 - Fill: Backfilling at building and foundations.

D. Section 334100 - Subdrainage: Filter aggregate and filter fabric for foundation drainage systems.

1.03 PRICE AND PAYMENT PROCEDURES

A. See Section 012200 - Unit Prices, for general requirements applicable to unit prices for earthwork.

B. Unit Price B : Excavating Unsuitable Soil Materials:
   1. Measurement method: By the cubic yard.
   2. Includes: Excavating below required elevations, loading and removing from site.
   3. Does Not Include Over-Excavation: Payment will not be made for over-excavated work nor for replacement materials.

C. Granular Fill Replacing Unsuitable Soil: Applies to Unit Price B .
   1. Measurement Method: By the cubic yard in place.
   2. Includes: Supplying fill, stockpiling, scarifying substrate surface, placing where required, and compacting.

D. Geotextile Stabilization Fabric: Applies to Unit Price C .
   1. Measurement Method: By the Square Yard in place.
   2. Includes: Cutting and placing where required.

1.04 DEFINITIONS

A. Finish Grade Elevations: Indicated on drawings.

B. Subgrade Elevations: Indicated on drawings and to meet requirements for topsoil placement specified in Section 312200 - Grading.

1.05 REFERENCE STANDARDS

A. ASTM C136/C136M - Standard Test Method for Sieve Analysis of Fine and Coarse Aggregates.

B. ASTM D698 - Standard Test Methods for Laboratory Compaction Characteristics of Soil Using Standard Effort (12,400 ft-lbf/ft3 (600 kN-m/m3)).

C. ASTM D1556/D1556M - Standard Test Method for Density and Unit Weight of Soil in Place by Sand-Cone Method.

D. ASTM D2167 - Standard Test Method for Density and Unit Weight of Soil in Place by the Rubber Balloon Method.

E. ASTM D2487 - Standard Practice for Classification of Soils for Engineering Purposes (Unified Soil Classification System).

F. ASTM D4318 - Standard Test Methods for Liquid Limit, Plastic Limit, and Plasticity Index of Soils.

G. ASTM D6938 - Standard Test Methods for In-Place Density and Water Content of Soil and Soil-Aggregate by Nuclear Methods (Shallow Depth).

1.06 SUBMITTALS

A. See Section 013000 - Administrative Requirements, for submittal procedures.

B. Samples: 10 lb sample of each type of imported fill; submit in air-tight containers to testing laboratory.

C. Materials Sources: Submit name of imported materials source.

D. Fill Composition Test Reports: Results of laboratory tests on proposed and actual materials used.

E. Compaction Density Test Reports by Owner's Testing Agency.

1.07 DELIVERY, STORAGE, AND HANDLING

A. When necessary, store materials on site in advance of need.

B. When fill materials need to be stored on site, locate stockpiles where designated.
   1. Separate differing materials with dividers or stockpile separately to prevent intermixing.
   2. Prevent contamination.
   3. Protect stockpiles from erosion and deterioration of materials.

PART 2 PRODUCTS

2.01 FILL MATERIALS

A. General Fill- Fill Type S1: Subsoil excavated on site or imported borrow material.
   1. Graded.
   2. Free of lumps larger than 3 inches, rocks larger than 2 inches, and debris.
   3. Complying with ASTM D2487 Group Symbol CL.

B. Concrete for Fill: Lean concrete. Minimum compressive strength of 2500 psi.

C. Granular Fill Under Pavements and Structures - Fill Type A1: Coarse aggregate, conforming to County of St. Louis Department of Highways and Traffic standard specification section 1007 - Aggregate Base Material, Type 5.
   1. Graded in accordance with ASTM C 136, within the following limits:
      a. 1 inch sieve: 100 percent passing.
      b. 1/2 inch sieve: 90 to 60 percent passing.
      c. No. 4 sieve: 60 to 35 percent passing.
      d. No. 30 sieve: 35 to 10 percent passing.
      e. No. 200 sieve: 15 to 0 percent passing.
      f. The fraction passing the No. 40 sieve shall have a maximum plasticity index of 6.

D. Granular Fill Replacing Unsuitable Soil - Fill Type A2: Coarse aggregate, conforming to ASTM D448 standard specification size number 357.
   1. Graded in accordance with ASTM C 136, within the following limits:
      a. 2-1/2 inch sieve: 100 percent passing.
      b. 2 inch sieve: 100 to 95 percent passing.
      c. 1 inch sieve: 70 to 35 percent passing.
      d. 1/2 inch sieve: 30 to 10 percent passing.
      e. No. 4 sieve: 5 to 0 percent passing.

E. Granular Fill for Drainage - Fill Type A3: Coarse aggregate, conforming to County of St. Louis Department of Highways and Traffic standard specification section 1009 - Aggregate For Drainage, Grade 3.
   1. Graded in accordance with ASTM C 136, within the following limits:
      a. 1 inch sieve: 100 percent passing.
      b. 3/4 inch sieve: 100 to 85 percent passing.
      c. 3/8 inch sieve: 55 to 15 percent passing.
      d. No. 4 sieve: 10 to 0 percent passing.

F. Bedding for Utility Pipes and Conduits, 3 Inch Diameter And Over - Fill Type A4: Coarse aggregate, conforming to ASTM D 448 standard specification size number 68.
   1. Graded in accordance with ASTM C 136, within the following limits:
      a. 1 inch sieve: 100 percent passing.
      b. 3/4 inch sieve: 100 to 90 percent passing.
      c. 3/8 inch sieve: 65 to 30 percent passing.
      d. No. 4 sieve: 25 to 5 percent passing.
      e. No. 8 sieve: 10 to 0 percent passing.

G. Bedding for Sanitary and Storm Sewer Pipes - Fill Type A5: Coarse aggregate, conforming to Metropolitan St. Louis Sewer District standard specification section 2.K.2 - MSD-1 Bedding.
   1. Graded in accordance with ASTM C 136, within the following limits:
      a. 1 inch sieve: 100 percent passing.
      b. 3/4 inch sieve: 100 to 90 percent passing.
      c. 1/2 inch sieve: 60 to 35 percent passing.
      d. No. 100 sieve: 10 to 0 percent passing.

H. Topsoil: See Section 312200.

2.02 ACCESSORIES

A. Geotextile Stabilization Fabric: Non-biodegradable, woven; Mirafi-HP570 manufactured by TenCate. www.tencate.com

B. Substitutions: See Section 016000 - Product Requirements.

2.03 SOURCE QUALITY CONTROL

A. See Section 014000 - Quality Requirements, for general requirements for testing and analysis of soil material.

B. Where fill materials are specified by reference to a specific standard, testing of samples for compliance will be provided before delivery to site.

C. If tests indicate materials do not meet specified requirements, change material and retest.

D. Provide materials of each type from same source throughout the Work.

PART 3 EXECUTION

3.01 EXAMINATION

A. Verify that survey bench marks and intended elevations for the work are as indicated.

3.02 PREPARATION

A. Identify required lines, levels, contours, and datum locations.

B. Call Missouri One Call System at 1-800-DIG-RITE (1-800-344-7483) not less than two working days before performing Work.
   1. Request underground utilities to be located and marked within and surrounding construction areas.

C. Locate, identify, and protect utilities that remain and protect from damage.

D. Notify utility company to remove and relocate utilities.

E. Protect bench marks, survey control points, existing structures, fences, sidewalks, paving, and curbs from excavating equipment and vehicular traffic.

F. Protect plants, lawns, rock outcroppings, and other features to remain.

G. Grade top perimeter of trenching area to prevent surface water from draining into trench. Provide temporary means and methods, as required, to maintain surface water diversion until no longer needed, or as directed by the Architect.

3.03 LINES AND GRADES

A. Lay pipes to lines and grades indicated on Drawings.

1. Architect reserves right to make changes in lines, grades, and depths of utilities when changes are required for Project conditions.

B. Use laser-beam instrument with qualified operator to establish lines and grades.

3.04 TRENCHING

A. Notify Architect of unexpected subsurface conditions and discontinue affected Work in area until notified to resume work.

B. Slope banks of excavations deeper than 4 feet to angle of repose or less until sheeted or shored.

C. Do not interfere with 45 degree bearing splay of foundations.

D. Cut trenches 2 feet wider than outside diameter of pipe or conduit unless indicated otherwise on Drawings.

E. Hand trim excavations. Hand trim for bell and spigot pipe joints. Remove loose matter.

F. Provide uniform and continuous bearing and support for bedding material, pipes, and conduits.

G. Remove large stones and other hard matter that could damage piping or impede consistent backfilling or compaction.

H. Remove water or materials from the trench that interfere with Work.

I. Remove lumped subsoil, boulders, and rock up to 1/3 cubic yard measured by volume. See Section 312316.26 for removal of larger material.

J. Remove excavated material that is unsuitable for re-use from site.

K. Stockpile excavated material to be re-used in area designated on site in accordance with Section 312200.

L. Remove excess excavated material from site.

M. Provide temporary means and methods, as required, to remove all water from trenching until directed by the Architect. Remove and replace soils deemed unsuitable by classification and which are excessively moist due to lack of dewatering or surface water control.

N. Determine the prevailing groundwater level prior to trenching. If the proposed trench extends less than 1 foot into the prevailing groundwater, control groundwater intrusion with perimeter drains routed to sump pumps, or as directed by the Architect.

O. Do not advance open trench more than 200 feet ahead of installed pipe.

3.05 SHEETING AND SHORING

A. Sheet, shore, and brace excavations to prevent danger to persons, structures and adjacent properties and to prevent caving, erosion, and loss of surrounding subsoil.

B. Support trenches more than 4 feet deep excavated through unstable, loose, or soft material.
   1. Provide sheeting, shoring, bracing, or other protection to maintain stability of excavation.
   2. Design sheeting, shoring, bracing, or other protection to be removed at completion of excavation work.

C. Repair damage caused by failure of the sheeting, shoring, or bracing and for settlement of filled excavations or adjacent soil at no cost to Owner.

D. Repair damage to new and existing Work from settlement, water or earth pressure or other causes resulting from inadequate sheeting, shoring, or bracing at no cost to Owner.

3.06 PREPARATION FOR UTILITY PLACEMENT

A. Cut out soft areas of subgrade not capable of compaction in place to elevations directed by Architect. Line over excavated trench bottom and sides with Geotextile Stabilization Fabric. Backfill to original subgrade elevation with Fill Type A2.

B. Compact subgrade to density equal to or greater than requirements for subsequent fill material.

C. Until ready to backfill, maintain excavations and prevent loose soil from falling into excavation.

3.07 BACKFILLING

A. Backfill to contours and elevations indicated using unfrozen materials.

B. Fill up to subgrade elevations unless otherwise indicated.

C. Employ a placement method that does not disturb or damage other work.

D. Systematically fill to allow maximum time for natural settlement. Do not fill over porous, wet, frozen or spongy subgrade surfaces.

E. Maintain optimum moisture content of fill materials to attain required compaction density.

F. Granular Fill: Place and compact materials in equal continuous layers not exceeding 6 inches compacted depth.

G. Soil Fill: Place and compact material in equal continuous layers not exceeding 8 inches compacted depth.

H. Slope grade away from building minimum 2 inches in 10 feet, unless noted otherwise. Make gradual grade changes. Blend slope into level areas.

I. Correct areas that are over-excavated.
   1. Thrust bearing surfaces: Fill with concrete.
   2. All areas except thrust bearing surfaces: Use Fill Type A1, flush to required elevation, compacted to minimum 95 percent of maximum dry density.

J. Compaction Density Unless Otherwise Specified or Indicated:
   1. Under paving, slabs-on-grade, and similar construction: 95 percent of maximum dry density.
   2. At other locations: 90 percent of maximum dry density.

K. Do not leave more than 50 feet of trench open at end of working day.

L. Protect open trench to prevent danger to Owner and the public.

M. Reshape and re-compact fills subjected to vehicular traffic.

3.08 BEDDING AND FILL AT SPECIFIC LOCATIONS

A. Utility Piping and Conduits Under 3 Inch Diameter:
   1. Bedding: Use Fill Type A7.
   2. Cover with Fill Type S1 under landscape areas.
   3. Cover with Fill Type A1 under pavements and structures.

B. Utility Piping and Conduits 3 Inch Diameter And Over:
   1. Bedding: Use Fill Type A4.
   2. Cover with Fill Type S1 under landscape areas.
   3. Cover with Fill Type A1 under pavements and structures.

C. Sanitary and Storm Sewer Piping:
   1. Bedding: Use Fill Type A5 or A6 as appropriate for pipe size and material.
   2. Cover with Fill Type S1 under landscape areas.
   3. Cover with Fill Type A1 under pavements and structures.

D. Subdrainage Piping at Foundation Perimeter, Under Slabs, and Behind Retaining Walls:
   1. Filter aggregate and geotextile fabric: Section 33 4600.
   2. Cover filter aggregate with Fill Type A3.
   3. Place geotextile fabric in trench to separate drainage fill from soil.

E. At French Drains:
   1. Use Fill Type A3.
   2. Place geotextile fabric in trench to separate drainage fill from soil.

3.09 TOLERANCES

A. Top Surface of General Backfilling: Plus or minus 1 inch from required elevations.

B. Top Surface of Backfilling Under Paved Areas: Plus or minus 1/2 inch from required elevations.

3.10 FIELD QUALITY CONTROL

A. See Section 014000 - Quality Requirements, for general requirements for field inspection and testing.

B. Perform compaction density testing on compacted fill in accordance with ASTM D1556, ASTM D2167, or ASTM D6938.

C. Evaluate results in relation to compaction curve determined by testing uncompacted material in accordance with ASTM D698 ("standard Proctor").

D. If tests indicate work does not meet specified requirements, remove work, replace and retest.

E. Frequency of Tests: 1 test for each lift for each 100 feet of trench length.

3.11 CLEANING

A. Leave unused materials in a neat, compact stockpile.

B. Remove unused stockpiled materials, leave area in a clean and neat condition. Grade stockpile area to prevent standing surface water.

C. Leave borrow areas in a clean and neat condition. Grade to prevent standing surface water.

END OF SECTION 312316.13

SECTION 312323
FILL

PART 1 GENERAL

1.01 SECTION INCLUDES

A. Filling holes, pits, and excavations generated as a result of removal (demolition) operations.

1.02 RELATED REQUIREMENTS

A. Section 312200 - Grading: Removal and handling of soil to be re-used.

B. Section 312200 - Grading: Site grading.

C. Section 312316 - Excavation: Removal and handling of soil to be re-used.

D. Section 312316.13 - Trenching: Excavating for utility trenches outside the building to utility main connections.

1.03 PRICE AND PAYMENT PROCEDURES

A. See Section 012200 - Unit Prices, for general requirements applicable to unit prices for earthwork.

B. Granular Fill Replacing Unsuitable Soil: Applies to Unit Price A .
   1. Measurement Method: By the cubic yard.
   2. Includes: Excavating existing material, stockpiling, scarifying substrate surface, placing where required, compacting, and dewatering.

C. Geotextile Stabilization Fabric: Applies to Unit Price C .
   1. Measurement Method: By the Square Yard in place.
   2. Includes: Cutting and placing where required.

1.04 DEFINITIONS

A. Finish Grade Elevations: Indicated on drawings.

B. Subgrade Elevations: Indicated on drawings.

1.05 REFERENCE STANDARDS

A. ASTM C136/C136M - Standard Test Method for Sieve Analysis of Fine and Coarse Aggregates.

B. ASTM D1556/D1556M - Standard Test Method for Density and Unit Weight of Soil in Place by Sand-Cone Method.

C. ASTM D2487 - Standard Practice for Classification of Soils for Engineering Purposes (Unified Soil Classification System).

D. ASTM D4318 - Standard Test Methods for Liquid Limit, Plastic Limit, and Plasticity Index of Soils.

E. ASTM D6938 - Standard Test Methods for In-Place Density and Water Content of Soil and Soil-Aggregate by Nuclear Methods (Shallow Depth).

1.06 SUBMITTALS

A. See Section 013000 - Administrative Requirements, for submittal procedures.

B. Samples: 10 pounds sample of each type of imported fill; submit in air-tight containers to testing laboratory.

C. Materials Sources: Submit name of imported materials source.

D. Fill Composition Test Reports: Results of laboratory tests on proposed and actual materials used, including manufactured fill.

1.07 DELIVERY, STORAGE, AND HANDLING

A. When necessary, store materials on site in advance of need.

B. When fill materials need to be stored on site, locate stockpiles where designated.
   1. Separate differing materials with dividers or stockpile separately to prevent intermixing.
   2. Prevent contamination.
   3. Protect stockpiles from erosion and deterioration of materials.

PART 2 PRODUCTS

2.01 FILL MATERIALS

A. General Fill- Fill Type S1: Subsoil excavated on site or imported borrow material.
   1. Graded.
   2. Free of lumps larger than 3 inches, rocks larger than 2 inches, and debris.
   3. Complying with ASTM D2487 Group Symbol CL.

B. Concrete for Fill: Lean concrete Minimum compressive strength of 2500 psi.

C. Granular Fill - Fill Type A1: Coarse aggregate, conforming to County of St. Louis Department of Highways and Traffic standard specification section 1007 - Aggregate Base Material, Type 5.
   1. Graded in accordance with ASTM C 136, within the following limits:
      a. 1 inch sieve: 100 percent passing.
      b. 1/2 inch sieve: 90 to 60 percent passing.
      c. No. 4 sieve: 60 to 35 percent passing.
      d. No. 30 sieve: 35 to 10 percent passing.
      e. No. 200 sieve: 15 to 0 percent passing.
      f. The fraction passing the No. 40 sieve shall have a maximum plasticity index of 6.

D. Granular Fill Replacing Unsuitable Soil - Fill Type A2: Coarse aggregate, conforming to ASTM D448 standard specification size number 357.
   1. Graded in accordance with ASTM C 136, within the following limits:
      a. 2-1/2 inch sieve: 100 percent passing.
      b. 2 inch sieve: 100 to 95 percent passing.
      c. 1 inch sieve: 70 to 35 percent passing.
      d. 1/2 inch sieve: 30 to 10 percent passing.
      e. No. 4 sieve: 5 to 0 percent passing.

E. Topsoil: See Section 312200.

2.02 ACCESSORIES

A. Geotextile Stabilization Fabric: Non-biodegradable, woven; Mirafi-HP570 manufactured by TenCate. www.tencate.com

B. Substitutions: See Section 016000 - Product Requirements.

2.03 SOURCE QUALITY CONTROL

A. See Section 014000 - Quality Requirements, for general requirements for testing and analysis of soil material.

B. Where fill materials are specified by reference to a specific standard, testing of samples for compliance will be provided before delivery to site.

C. If tests indicate materials do not meet specified requirements, change material and retest.

D. Provide materials of each type from same source throughout the Work.

PART 3 EXECUTION

3.01 EXAMINATION

A. Verify that survey bench marks and intended elevations for the Work are as indicated.

B. Identify required lines, levels, contours, and datum locations.

C. See Section 312200 - Grading for additional requirements.

D. Verify areas to be filled are not compromised with surface or ground water.

3.02 PREPARATION

A. Scarify subgrade surface to a depth of 6 inches to identify soft spots.

B. Cut out soft areas of subgrade not capable of compaction in place. Backfill with Concrete Fill Type S1 Fill Type A1 or Fill Type A2 as directed by Architect.

C. Compact subgrade to density equal to or greater than requirements for subsequent fill material.

D. Until ready to fill, maintain excavations and prevent loose soil from falling into excavation.

3.03 FILLING

A. Fill to contours and elevations indicated using unfrozen materials.

B. Fill up to subgrade elevations unless otherwise indicated.

C. Employ a placement method that does not disturb or damage other work.

D. Systematically fill to allow maximum time for natural settlement. Do not fill over porous, wet, frozen or spongy subgrade surfaces.

E. Maintain optimum moisture content of fill materials to attain required compaction density.

F. Granular Fill: Place and compact materials in equal continuous layers not exceeding 6 inches compacted depth.

G. Soil Fill: Place and compact material in equal continuous layers not exceeding 8 inches compacted depth.

H. Slope grade away from building minimum 2 inches in 10 feet, unless noted otherwise. Make gradual grade changes. Blend slope into level areas.

I. Correct areas that are over-excavated.
   1. Load-bearing foundation surfaces: Fill with concrete.
   2. Other areas: Use general fill, flush to required elevation, compacted to minimum 95 percent of maximum dry density.

J. Compaction Density Unless Otherwise Specified or Indicated:
   1. Under paving, footings, slabs-on-grade, footings, footings, similar construction, and footings: 95 percent of maximum dry density.
   2. At other locations: 90 percent of maximum dry density.

K. Reshape and re-compact fills subjected to vehicular traffic.

L. Maintain temporary means and methods, as required, to remove all water while fill is being placed as required, or until directed by the Architect. Remove and replace soils deemed unsuitable by classification and which are excessively moist due to lack of dewatering or surface water control.

3.04 FILL AT SPECIFIC LOCATIONS

A. Use general fill unless otherwise specified or indicated.

B. At Foundation Walls and Footings:
   1. Use Fill Type S1.
   2. Compact each lift to 95 percent of maximum dry density on both sides of foundation walls and footings.
   3. Do not backfill against unsupported foundation walls.
   4. Backfill simultaneously on each side of unsupported foundation walls until supports are in place.

C. Over Subdrainage Piping at Foundation Perimeter and Under Slabs:
   1. Drainage fill and geotextile fabric: Section 334100 - Subdrainage.
   2. Cover drainage fill with Fill Type A3.

D. Over Buried Utility Piping, Conduits, and Duct Bank in Trenches:
   1. Bedding for under 3 Inch diameter: Use Fill Type A7.
   2. Bedding for 3 Inch diameter and over: Use Fill Type A4.

3. Cover with Fill Type S1.

E. Inside Planter Boxes:
   1. Use Fill Type A3, 4 inches deep.
   2. Cover with Geotextile Drainage Fabric.
   3. Cover with Fill Type A7, 2 inches deep.
   4. Finish with topsoil, to within 2 inches of planter rim, lightly tamped.

F. At Lawn Areas:
   1. Use Fill Type S1.
   2. See Section 312200 - Grading for topsoil placement.

G. At Planting Areas Other Than Lawns and Planter Boxes:
   1. Use Fill Type S1.
   2. See Section 312200 - Grading for topsoil placement.

H. At French Drains:
   1. Use Fill Type A3.

3.05 TOLERANCES

A. Top Surface of General Filling: Plus or minus 1 inch from required elevations.

3.06 CLEANING

A. See Section 017419 - Construction Waste Management and Disposal, for additional requirements.

B. Remove unused stockpiled materials, leave area in a clean and neat condition. Grade stockpile area to prevent standing surface water.

C. Leave borrow areas in a clean and neat condition. Grade to prevent standing surface water.

END OF SECTION 312323

SECTION 312500
EROSION AND SEDIMENTATION CONTROLS

PART 1 GENERAL

1.01 SECTION INCLUDES

A. Permanent erosion and sediment control.

1.02 RELATED REQUIREMENTS

A. Section 312323 - Fill: Filling and compaction.

B. Section 321123 - Aggregate Base Courses: Aggregate base course.

C. Section 329223 - Sodding: Permanent turf for erosion control.

1.03 REFERENCE STANDARDS

A. ASTM D4318 - Standard Test Methods for Liquid Limit, Plastic Limit, and Plasticity Index of Soils.

B. ASTM D5338 - Standard Test Method for Determining Aerobic Biodegradation of Plastic Materials Under Controlled Composting Conditions, Incorporating Thermophilic Temperatures.

C. ASTM D7322/D7322M - Standard Test Method for Determination of Erosion Control Product (ECP) Ability to Encourage Seed Germination and Plant Growth Under Bench-Scale Conditions.

D. ASTM D7367 - Standard Test Method for Determining Water Holding Capacity of Fiber Mulches for Hydraulic Planting.

E. EPA (NPDES) - National Pollutant Discharge Elimination System (NPDES), Construction General Permit.

F. FHWA FLP-94-005 - Best Management Practices for Erosion and Sediment Control.

G. USDA TR-55 - Urban Hydrology for Small Watersheds; USDA Natural Resources Conservation Service.

1.04 SUBMITTALS

A. See Section 013000 - Administrative Requirements for submittal procedures.

B. Maintenance Instructions: Provide instructions covering inspection and maintenance for preventive measures that must remain after Substantial Completion.

PART 2 PRODUCTS

2.01 PERFORMANCE REQUIREMENTS

A. Comply with requirements of EPA (NPDES) for erosion and sedimentation control, as specified by the NPDES, for Phases I and II, and in compliance with requirements of Construction General Permit (CGP), whether the project is required by law to comply or not.

B. Comply with more stringent requirements of St. Louis County Erosion and Sedimentation Control Manual.

C. Runoff Calculation Standard for Urban Areas: USDA TR-55.

2.02 ACCESSORY MATERIALS

A. Fill Material: See Section 312323.

B. Sod for Permanent Cover: Cultivated grass sod, type as indicated; with strong fibrous root system, free of stones, burned or bare spots.

PART 3 EXECUTION

3.01 EXAMINATION

A. Examine site and identify existing features that contribute to erosion resistance; maintain such existing features to greatest extent possible.

3.02 PREPARATION

A. Schedule work so that soil surfaces are left exposed for the minimum amount of time.

B. Do not begin clearing, grading, or other work involving disturbance of ground surface cover until applicable permits have been obtained; furnish documentation required to obtain applicable permits.
   1. Obtain and pay for permits and provide security required by authority having jurisdiction.

C. Timing: Put preventive measures in place as soon as possible after disturbance of surface cover and before precipitation occurs.

3.03 FIELD QUALITY CONTROL

A. Provide analysis of topsoil fill; see Section 014000.

3.04 INSTALLATION

A. Hydroseeding: Apply seeded slurry with a hydraulic seeder at a rate of 275 lbs per acre evenly in two intersecting directions.

B. Do not seed areas in excess of that which can be mulched on same day.

C. Immediately following seeding, apply mulch to a thickness of 1/8 inch. Maintain clear of shrubs and trees.

D. Apply water with a fine spray immediately after each area has been mulched. Saturate to 4 inches of soil.

E. Following germination, immediately reseed areas without germinated seeds that are larger than 4 by 4 inches.

3.05 MAINTENANCE

A. Inspect preventive measures weekly, within 24 hours after the end of any storm that produces 0.5 inches or more rainfall at the project site, and daily during prolonged rainfall.

B. Repair deficiencies immediately.

3.06 CLEAN UP

A. Clean out sediment control structures that are to remain as permanent measures.

END OF SECTION 312500

SECTION 321123
AGGREGATE BASE COURSES

PART 1 GENERAL

1.01 SECTION INCLUDES

A. Aggregate base course.

1.02 RELATED REQUIREMENTS

A. Section 312200 - Grading: Preparation of site for base course and topsoil fill at areas adjacent to aggregate base course.

B. Section 312316.13 - Trenching: Compacted fill over utility trenches under base course.

C. Section 312323 - Fill: Compacted fill under base course.

D. Section 321216 - Asphalt Paving: Binder and finish asphalt courses.

1.03 REFERENCE STANDARDS

A. ASTM C136/C136M - Standard Test Method for Sieve Analysis of Fine and Coarse Aggregates.

B. ASTM D698 - Standard Test Methods for Laboratory Compaction Characteristics of Soil Using Standard Effort (12,400 ft-lbf/ft3 (600 kN-m/m3)).

C. ASTM D1556/D1556M - Standard Test Method for Density and Unit Weight of Soil in Place by Sand-Cone Method.

D. ASTM D2167 - Standard Test Method for Density and Unit Weight of Soil in Place by the Rubber Balloon Method.

E. ASTM D4318 - Standard Test Methods for Liquid Limit, Plastic Limit, and Plasticity Index of Soils.

F. ASTM D6938 - Standard Test Methods for In-Place Density and Water Content of Soil and Soil-Aggregate by Nuclear Methods (Shallow Depth).

1.04 SUBMITTALS

A. See Section 013000 - Administrative Requirements for submittal procedures.

B. Materials Sources: Submit name of imported materials source.

C. Aggregate Composition Test Reports: Results of laboratory tests on proposed materials.

D. Compaction Density Test Reports by Owner's Testing Agency.

1.05 DELIVERY, STORAGE, AND HANDLING

A. When necessary, store materials on site in advance of need.

B. When aggregate materials need to be stored on site, locate where directed by Owner.

C. Aggregate Storage, General:
   1. Separate differing materials with dividers or stockpile separately to prevent intermixing.
   2. Prevent contamination.
   3. Protect stockpiles from erosion and deterioration of materials.

PART 2 PRODUCTS

2.01 MATERIALS

A. Aggregate Type A1: Coarse aggregate, conforming to County of St. Louis Department of Highways and Traffic standard specification section 1007 - Aggregate Base Material, Type 5.
   1. Graded in accordance with ASTM C 136, within the following limits:
      a. 1 inch sieve: 100 percent passing.
      b. 1/2 inch sieve: 90 to 60 percent passing.
      c. No. 4 sieve: 60 to 35 percent passing.
      d. No. 30 sieve: 35 to 10 percent passing.

e. No. 200 sieve: 15 to 0 percent passing.
f. The fraction passing the No. 40 sieve shall have a maximum plasticity index of 6.

2.02 SOURCE QUALITY CONTROL

A. See Section 014000 - Quality Requirements for general requirements for testing and analysis of aggregate materials.

B. Provide materials of each type from same source throughout the Work.

PART 3 EXECUTION

3.01 EXAMINATION

A. Verify that survey bench marks and intended elevations for the work are as indicated.

B. Verify substrate has been inspected, gradients and elevations are correct, and is dry.

3.02 PREPARATION

A. Correct irregularities in substrate gradient and elevation by scarifying, reshaping, and re-compacting.

B. Do not place aggregate on soft, muddy, or frozen surfaces.

3.03 INSTALLATION

A. Place aggregate in maximum 6 inch layers and roller compact to specified density.

B. Level and contour surfaces to elevations and gradients indicated.

C. Add small quantities of fine aggregate to coarse aggregate as appropriate to assist compaction.

D. Add water to assist compaction. If excess water is apparent, remove aggregate and aerate to reduce moisture content.

E. Use mechanical tamping equipment in areas inaccessible to compaction equipment.

3.04 TOLERANCES

A. Flatness: Maximum variation of 1/2 inch measured with 10 foot straight edge.

B. Scheduled Compacted Thickness: Within 1/4 inch.

C. Variation From Design Elevation: Within 1/2 inch.

3.05 FIELD QUALITY CONTROL

A. See Section 014000 - Quality Requirements for general requirements for field inspection and testing.

B. Compaction density testing will be performed on compacted aggregate base course in accordance with ASTM D1556, ASTM D2167, ASTM D3017, or ASTM D6938.

C. Results will be evaluated in relation to compaction curve determined by testing uncompacted material in accordance with ASTM D698 ("standard Proctor").

D. If tests indicate work does not meet specified requirements, remove work, replace and retest.

E. Frequency of Tests: 1 test for each lift for each 5 000 s.f. of area.

F. Proof roll compacted aggregate at surfaces that will be under slabs-on-grade and paving.

3.06 CLEANING

A. Remove unused stockpiled materials, leave area in a clean and neat condition. Grade stockpile area to prevent standing surface water.

END OF SECTION 321123

SECTION 321216
ASPHALT PAVING

PART 1 GENERAL

1.01 SECTION INCLUDES

A. Single course bituminous concrete paving for overlay.

1.02 RELATED REQUIREMENTS

1.03 PRICE AND PAYMENT PROCEDURES

A. The Contractor shall be allowed to make a claim for adjustment to the Contract Sum for any plant mix bituminous base, plant mix bituminous pavement, and plant mix bituminous surface leveling placed if the Missouri Department of Transportation (MODOT) Asphalt Price Index increases by more than 10 percent from the monthly Asphalt Price Index of the month the project was bid.
   1. The Owner will issue a Change Order based upon the approved claim made by the Contractor, as defined and calculated below, for the applicable Work completed during each month except for Work on which the Contractor is being charged liquidated damages, due to working beyond the project Substantial Completion Date.
      a. In this case, the "D" value used for the price adjustment will be either the last "D" value prior to the date that liquidated damage assessment began or the current monthly "D" value, whichever is lower.
      b. If the Contractor is being charged liquidated damages due to the Work progressing beyond the project Substantial Completion Date and the current months “D” value results in a credit to the Owner, then the current monthly "D" value will be used.

B. The Owner will issue a credit Change Order for adjustment to the Contract Sum for any plant mix bituminous base, plant mix bituminous pavement, and plant mix bituminous surface leveling placed if the Missouri Department of Transportation (MODOT) Asphalt Price Index decreases by more than 10 percent from the monthly Asphalt Price Index of the month the project was bid.
   1. The Contractor shall cooperate with the Owner and provide any requested information to assist in determining the correct quantities to be used in calculating the credit Change Order.

C. The Asphalt Price Index will be obtained from the MODOT website: http://www.modot.org/business/contractor_resources/bid_opening_info/bidGenInfo.shtml

D. To determine the adjustment for any asphalt cement containing material specified in this section the following formula will be used:
   1. A = (B x C) x (D-E)

E. Where:
   1. A = Contract adjustment amount for asphalt mix placed during monthly Asphalt Price Index period
   2. B = Tons of asphalt mix placed during the monthly Asphalt Price Index period
   3. C = % of virgin asphalt binder as listed in the job mix formula in use
   4. D = Asphalt Price Index, as published by MODOT for the month prior to the month of mix placement (e.g., if asphalt material placed in July, use Price Index listed for June)
   5. E = Asphalt Price Index, as published by MODOT for the month prior to the letting (e.g., if project bid in February, use Price Index listed for January)

F. The contract adjustment will be applied to the actual amount of asphalt binder used by the Contractor for all asphalt items.

G. The percentage of virgin asphalt as shown in the submitted and accepted job mix formula for the Project will be the basis for adjustments for any asphalt mix type placed on the Project during the monthly index period.

H. This adjustment will not extend to any effective asphalt obtained from the use of Recycled Asphalt Pavement (RAP) and Recycled Asphalt Shingles (RAS) or both will not be eligible for adjustment.

1.04 REFERENCE STANDARDS

A. AI MS-2 - Asphalt Mix Design Methods.

B. AI MS-19 - Basic Asphalt Emulsion Manual.

C. ASTM D946 - Standard Specification for Penetration-Graded Asphalt Cement for Use in Pavement Construction.

1.05 SUBMITTALS

A. Product Data: Submit product information and mix design to Owner.

B. Manufacturer's Certificate: Certify Products meet or exceed specified requirements.

1.06 QUALITY ASSURANCE

A. Perform Work in accordance with County of St. Louis Department of Highways and Traffic standards.

B. Mixing Plant: Complying with State of Missouri Highways standard.

C. Obtain materials from same source throughout.

1.07 FIELD CONDITIONS

A. Do not place asphalt when ambient air or base surface temperature is less than 40 degrees F, or surface is wet or frozen.

B. Place bitumen mixture when temperature is not more than 15 F degrees below bitumen supplier's bill of lading and not more than maximum specified temperature.

PART 2 PRODUCTS

2.01 MATERIALS

A. Crack Filler/Sealant: Sealant material shall be in accordance with County of St. Louis Department of Highways and Traffic standard specifications, Section 1057.5, Joint and Crack Sealer, Hot-Poured Elastic Type.

B. Tack Coat: Emulsified asphalt in accordance with County of St. Louis Department of Highways and Traffic standard specifications, Section 407 - Tack Coat.

2.02 ASPHALT PAVING MIXES

A. Use dry material to avoid foaming. Mix uniformly.

B. Type C Overlay Course: In accordance with County of St. Louis Department of Highways and Traffic standard specifications, Section 405 - Bituminous Pavements and Base.

C. Mix Temperature: Not less than 200 degrees F at time of placement.

PART 3 EXECUTION

3.01 EXAMINATION

A. Contractor shall contact the Owner to arrange an inspection of the crack repair by the Owner and Contractor prior to placing the tack coat and overlay.

3.02 PREPARATION - TACK COAT

A. Apply tack coat in accordance with County of St. Louis Department of Highway and Traffic standard specifications, Section 407 - Tack Coat.

B. Apply tack coat on asphalt surfaces to receive overlay at uniform rate of 0.05 gal/sq yd.

C. Apply tack coat to contact surfaces of existing asphalt cold joints, concrete curbs, and concrete curb and gutters at uniform rate of 0.05 galy/sq yd.

3.03 PLACING ASPHALT PAVEMENT - SINGLE COURSE OVERLAY

A. Install Work in accordance with County of St. Louis Department of Highways and Traffice standards.

B. Place asphalt within 24 hours of applying tack coat.

C. Place to 2 inch compacted thickness.

D. Compact pavement by rolling to specified density. Do not displace or extrude pavement from position. Hand compact in areas inaccessible to rolling equipment.

E. Perform rolling with consecutive passes to achieve even and smooth finish without roller marks.

3.04 TOLERANCES

A. Flatness: Maximum variation of 1/4 inch measured with 10 foot straight edge.

B. Compacted Thickness: Within 1/4 inch of specified or indicated thickness.

C. Variation from True Elevation: Within 1/2 inch.

3.05 FIELD QUALITY CONTROL

A. See Section 014000 - Quality Requirements, for general requirements for quality control.

B. Provide field inspection and testing. Take samples and perform tests in accordance with AI MS-2.

3.06 PROTECTION

A. Immediately after placement, protect pavement from mechanical injury for 2 days or until surface temperature is less than 140 degrees F.

END OF SECTION 321216

SECTION 323113
CHAIN LINK FENCES AND GATES

PART 1 GENERAL

1.01 SECTION INCLUDES

A. Posts, rails, and frames.

B. Excavation for post bases; concrete foundation for posts.

C. Manual gates with related hardware.

D. Accessories.

1.02 REFERENCE STANDARDS

A. ASTM A123/A123M - Standard Specification for Zinc (Hot-Dip Galvanized) Coatings on Iron and Steel Products.

B. ASTM A153/A153M - Standard Specification for Zinc Coating (Hot-Dip) on Iron and Steel Hardware.

C. ASTM C94/C94M - Standard Specification for Ready-Mixed Concrete.

D. ASTM F567 - Standard Practice for Installation of Chain-Link Fence.

E. ASTM F1043 - Standard Specification for Strength and Protective Coatings on Steel Industrial Fence Framework.

F. CLFMI CLF-FIG0111 - Field Inspection Guide.

G. FS RR-F-191/1D - Fencing, Wire and Post Metal (Chain-Link Fence Fabric).

1.03 SUBMITTALS

A. See Section 013000 - Administrative Requirements, for submittal procedures.

B. Product Data: Provide data on fabric, posts, accessories, fittings and hardware.

C. Project Record Documents: Accurately record actual locations of property perimeter posts relative to property lines.

1.04 QUALITY ASSURANCE

A. Manufacturer Qualifications: Company specializing in manufacturing products specified in this section, with not less than three years of documented experience.

PART 2 PRODUCTS

2.01 MANUFACTURERS

A. Chain Link Fences and Gates:
   1. Tymetal Corp; The Fortress Heavy Duty Cantilever Slide Gate; www.tymetal.com/#sle..
   2. The Chamberlain Group, LLC; LiftMaster Elite Series; www.liftmaster.com
   3. Collins & Hermann Infrastructure Solutions; Motorized Cantilevered Slide Gate; www.collinsandhermann.com
   4. Substitutions: See Section 016000 - Product Requirements.

2.02 COMPONENTS

A. Line Posts: 1.9 inch diameter.

B. Corner and Terminal Posts: 2.38 inch diameter.

C. Gate Posts: 3-1/2 inch diameter.

D. Top and Brace Rail: 1.66 inch diameter, plain end, sleeve coupled.

E. Bottom Rail: 1.66 inch diameter, plain end, sleeve coupled.

F. Gate Frame: 1.66 inch diameter for welded fabrication.

G. Fabric: 2 inch diamond mesh interwoven wire, 9 gauge, 0.1483 inch thick, top selvage knuckle end closed, bottom selvage enclosed diamond.

H. Tension Wire: 6 gauge, 0.1920 inch thick steel, single strand.

I. Tie Wire: Aluminum alloy steel wire.

2.03 MATERIALS

A. Posts, Rails, and Frames: ASTM F1083 Schedule 40 hot-dipped galvanized steel pipe, welded construction, minimum yield strength of 50 ksi for sizes NPS 5 and larger

B. Line Posts: Type I round in accordance with FS RR-F-191/1D.

C. Terminal, Corner, Rail, Brace, and Gate Posts: Type I round in accordance with FS RR-F-191/1D.

D. Wire Fabric: ASTM F 668 polymer-coated, class 2B fused and bonded steel chain link fabric.

E. Concrete: Ready-mixed, complying with ASTM C94/C94M; normal Portland cement; 3,000 psi strength at 28 days, 3 inch slump; 1 inch nominal size aggregate.

2.04 ACCESSORIES

A. Caps: Molded rigid vinyl; sized to post diameter, set screw retainer.

B. Fittings: Sleeves, bands, clips, rail ends, tension bars, fasteners and fittings; steel.

2.05 FINISHES

A. Components (Other than Fabric): Galvanized in accordance with ASTM A123/A123M, at 1.7 ounces per square foot.

B. Components and Fabric: Vinyl coated over coating of 1.8 ounces per square foot galvanizing.

C. Hardware: Hot-dip galvanized to weight required by ASTM A153/A153M.

D. Accessories: Same finish as framing, powder coat accessories which cannot receive vinyl coating.

E. Color(s): To be selected by Owner from manufacturer's full range.

PART 3 EXECUTION

3.01 EXAMINATION

A. Verification of Conditions: Verify that areas are clear of obstructions or debris.

3.02 PREPARATION

A. Removal: Obstructions or debris.

3.03 INSTALLATION

A. Install framework, fabric, accessories and gates in accordance with ASTM F567.

B. Place fabric on outside of posts and rails.

C. Set intermediate, terminal, and gate posts plumb , in concrete footings with top of footing 2 inches above finish grade. Slope top of concrete for water runoff.

D. Line Post Footing Depth Below Finish Grade: ASTM F567.

E. Corner, Gate and Terminal Post Footing Depth Below Finish Grade: ASTM F567.

F. Brace each gate and corner post to adjacent line post with horizontal center brace rail and diagonal truss rods. Install brace rail one bay from end and gate posts.

G. Provide top rail through line post tops and splice with 6 inch long rail sleeves.

H. Install center and bottom brace rail on corner gate leaves.

I. Do not stretch fabric until concrete foundation has cured 7 days.

J. Stretch fabric between terminal posts or at intervals of 100 feet maximum, whichever is less.

K. Position bottom of fabric 2 inches above finished grade.

L. Fasten fabric to top rail, line posts, braces, and bottom tension wire with tie wire at maximum 15 inches on centers.

M. Attach fabric to end, corner, and gate posts with tension bars and tension bar clips.

N. Install bottom tension wire stretched taut between terminal posts.

3.04 TOLERANCES

A. Maximum Variation From Plumb: 1/4 inch.

B. Maximum Offset From True Position: 1 inch.

C. Do not infringe on adjacent property lines.

3.05 FIELD QUALITY CONTROL

A. See Section 014000 - Quality Requirements, for additional requirements.

B. Layout: Verify that fence installation markings are accurate to design, paying attention to gate locations, underground utilities, and property lines.

C. Post Settings: Randomly inspect three locations against design for:
   1. Hole diameter.
   2. Hole depth.
   3. Hole spacing.

D. Fence Height: Randomly measure fence height at three locations or at areas that appear out of compliance with design.

E. Gates: Inspect for level, plumb, and alignment.

F. Workmanship: Verify neat installation free of defects. See CLFMI CLF-FIG0111 for field inspection guidance.

3.06 CLEANING

A. Clean jobsite of excess materials; scatter excess material from post hole excavations uniformly away from posts. Remove excess material if required.

B. Clean fence with mild household detergent and clean water rinse well.

3.07 CLOSEOUT ACTIVITIES

A. See Section 017800 - Closeout Submittals, for closeout submittals.

B. See Section 017900 - Demonstration and Training, for additional requirements.

C. Demonstrate proper operation of equipment to Owner's designated representative.

D. Training: Train Owner's personnel on operation and maintenance of system.
   1. Use operation and maintenance manual as training reference, supplemented with additional training materials as required.
   2. Provide minimum of two hours of training.

END OF SECTION 323113

SECTION 323223
SEGMENTAL RETAINING WALLS

PART 1 GENERAL

1.01 SECTION INCLUDES

A. Segmental retaining walls made of modular concrete units with or without soil reinforcement.

B. Subdrainage pipe behind retaining wall.

C. Shop drawings.

D. Retaining wall units.

E. Drainage filter.

1.02 PRICE AND PAYMENT PROCEDURES

A. Excavation of unsuitable soil and replacement with acceptable fill will be paid for at unit prices specified in Section 312316 - Excavation.

1.03 RELATED REQUIREMENTS

A. Section 311000 - Site Clearing: Removal of unwanted trees, bushes, and debris.

B. Section 312200 - Grading: Rough and finish grading.

C. Section 312316 - Excavation.

D. Section 312323 - Fill.

1.04 REFERENCE STANDARDS

A. AASHTO M 288 - Standard Specification for Geosynthetics for Highway Applications.

B. AASHTO NTPEP - National Transportation Product Evaluation Program.

C. ASCE 7 - Minimum Design Loads and Associated Criteria for Buildings and Other Structures.

D. ASTM C1372 - Standard Specification for Dry-Cast Segmental Retaining Wall Units.

E. ASTM D448 - Standard Classification for Sizes of Aggregate for Road and Bridge Construction.

F. ASTM D698 - Standard Test Methods for Laboratory Compaction Characteristics of Soil Using Standard Effort (12,400 ft-lbf/ft3 (600 kN-m/m3)).

G. ASTM D1241 - Standard Specification for Materials for Soil-Aggregate Subbase, Base, and Surface Courses.

H. ASTM D1557 - Standard Test Methods for Laboratory Compaction Characteristics of Soil Using Modified Effort (56,000 ft-lbf/ft3 (2,700 kN-m/m3)).

I. ASTM D2487 - Standard Practice for Classification of Soils for Engineering Purposes (Unified Soil Classification System).

J. ASTM D3034 - Standard Specification for Type PSM Poly(Vinyl Chloride) (PVC) Sewer Pipe and Fittings.

K. ASTM D4318 - Standard Test Methods for Liquid Limit, Plastic Limit, and Plasticity Index of Soils.

L. ASTM D4491/D4491M - Standard Test Methods for Water Permeability of Geotextiles by Permittivity.

M. ASTM D4595 - Standard Test Method for Tensile Properties of Geotextiles by the Wide-Width Strip Method.

N. ASTM D4595 - Standard Test Method for Tensile Properties of Geotextiles by the Wide-Width Strip Method.

O. ASTM D4632/D4632M - Standard Test Method for Grab Breaking Load and Elongation of Geotextiles.

P. ASTM D4751 - Standard Test Methods for Determining Apparent Opening Size of a Geotextile.

Q. ASTM D5262 - Standard Test Method for Determining the Unconfined Tension Creep and Creep Rupture Behavior of Planar Geosynthetics Used for Reinforcement Purposes.

R. ASTM D5262 - Standard Test Method for Determining the Unconfined Tension Creep and Creep Rupture Behavior of Planar Geosynthetics Used for Reinforcement Purposes.

S. ASTM D5321/D5321M - Standard Test Method for Determining the Shear Strength of Soil-Geosynthetic and Geosynthetic-Geosynthetic Interfaces by Direct Shear.

T. ASTM D5818 - Standard Practice for Exposure and Retrieval of Samples to Evaluate Installation Damage of Geosynthetics.

U. ASTM D5818 - Standard Practice for Exposure and Retrieval of Samples to Evaluate Installation Damage of Geosynthetics.

V. ASTM D6638 - Standard Test Method for Determining Connection Strength Between Geosynthetic Reinforcement and Segmental Concrete Units (Modular Concrete Blocks).

W. ASTM D6638 - Standard Test Method for Determining Connection Strength Between Geosynthetic Reinforcement and Segmental Concrete Units (Modular Concrete Blocks).

X. ASTM D6706 - Standard Test Method for Measuring Geosynthetic Pullout Resistance in Soil.

Y. ASTM D6916 - Standard Test Method for Determining the Shear Strength Between Segmental Concrete Units (Modular Concrete Blocks).

Z. ASTM D7928 - Standard Test Method for Particle-Size Distribution (Gradation) of Fine-Grained Soils Using the Sedimentation (Hydrometer) Analysis.

AA. ASTM F667/F667M - Standard Specification for 3 through 24 in. Corrugated Polyethylene Pipe and Fittings.

BB. NCMA TR-127 - Design Manual for Segmental Retaining Walls 3rd Edition.

1.05 SUBMITTALS

A. See Section 013000 - Administrative Requirements, for submittal procedures.

B. Segmental Retaining Wall Units:
   1. Manufacturer's product data.

C. Retaining Wall Design Engineer Qualifications and Statement of Experience.

D. Shop Drawings: Engineering drawings for installation, including elevations, large-scale details of elevations, typical sections, details, and connections, soil reinforcement, and drainage provisions.
   1. Include marked up contract drawings showing exact dimensions for blocks, required coping, and other minor revisions.
   2. Design Data: Submit detailed design calculations showing compliance with specified design criteria and material evaluations performed in accordance with specified design standard, signed and sealed by Design Engineer.
   3. Submit no less than 2 weeks prior to start of work.
   4. Obtain approval of Architect prior to start of work.

E. Permit: Obtain permit from authorities having jurisdiction prior to start of work and submit copy of permit.

1.06 QUALITY ASSURANCE

A. Retaining Wall Design Engineer Qualifications: Provide design by or under direct supervision of Professional Engineer experienced in the work of this section and licensed in the State in which the Project is located and:
   1. Having minimum of five years documented experience in design of reinforced soil structures.

B. Manufacturer Qualifications -- Concrete Units: Firm specializing in manufacturing products specified in this section and:
   1. With not less than 3 years experience.

C. Installer Qualifications: Firm specializing in design and installation of segmental retaining walls and:
   1. With not less than 3 years documented experience.
   2. Approved by retaining wall system manufacturer.

1.07 DELIVERY, STORAGE, AND HANDLING

A. Store products above ground on wood pallets or blocking, in manufacturer's unopened packaging, until ready for installation.

B. Prevent excessive soil and mud from coming in contact with face of concrete units.

C. Polymeric Materials: Store at temperatures above minus 20 degrees F; rolled materials may be laid flat or stood on end.

D. Protect material from damage, do not use damaged material.

E. Remove damaged material from the site.

F. Store and dispose of solvent-based materials, and materials used with solvent-based materials, in accordance with requirements of local authorities having jurisdiction.

PART 2 PRODUCTS

2.01 MANUFACTURERS

A. Segmental Retaining Walls:
   1. Anchor Wall Systems, Inc.: www.anchorwall.com.
   2. Keystone Retaining Wall Systems, Inc.: www.keystonewalls.com.
   3. Versa-Lok Retaining Wall Systems: www.versa-lok.com.
   4. N/A.
   5. Substitutions: See Section 016000 - Product Requirements.
   6. Reinforcement shall have AASHTO NTPEP approval.

2.02 RETAINING WALLS

A. Contractor is responsible for design of the retaining walls.
   1. Design to required horizontal and vertical alignment as indicated on drawings.

B. Design Standard: Design retaining walls to be capable of withstanding the effects of gravity loads due to soil pressures resulting from grades indicated, determined in accordance with:
   1. NCMA TR-127.
   2. Include effects of sloped backfill as indicated on drawings.
   3. Include effects of superimposed loads (surcharge) as indicated on drawings.
   4. In addition, comply with applicable local, state, and federal codes and regulations.
   5. This design method considers potential failure modes categorized by external, internal, local, compound, and global stability.
   6. Architect has considered global stability and has indicated minimum design requirements in Contract Documents.
   7. Seismic Stability: Perform analysis in accordance with ASCE 7.
   8. Factor of Safety:
      a. External Stability:
         1) Base Sliding = 1.5
         2) Overturning = 1.5
         3) Bearing Capacity = 2.0
         4) Global Stability = 1.3
      b. Internal Stability:
         1) Shear Capacity = 1.5
   9. Surcharges:
      a. Dead Load:
         1) No Traffic or Pedestrian Traffic Above Wall = 0 lb/sf minimum

2) Light Vehicular Traffic Above Wall (automobiles and lightweight trucks) = 100 lb/sf minimum
3) Heavy Vehicular Traffic Above Wall (buses and tractor/trailer trucks) = 250 lb/sf minimum

10. Maximum Allowable Bearing Pressure: 1.5 ksf unless soils report indicates allowable bearing pressure is greater.
11. Provide engineering services as required for analysis for all modes of stability.
12. Use of design software for calculations is permitted.
13. Submit complete shop drawings showing all features of the design.

C. Setback: 3/4 inch back from face per course.

D. Mass (Weight) Per Wall Face Area: 35 pounds per square foot, minimum, including filled voids.

E. Shear Resistance: Design the wall not to exceed the capacity of materials and soils to resist shear:
1. Shear Resistance Between Units: Determine in accordance with ASTM D6916.
2. Connection Between Units and Soil Reinforcement: Determine in accordance with ASTM D6638. Strength shall exceed the maximum tensile force with a Factor of Safety of 1.5.
3. Coefficient for Direct Shear of Reinforcement on Soil: Determine in accordance with ASTM D5321/D5321M using soil similar in gradation and texture to that to be used for fill in the reinforced zone.

F. Soil Reinforcement:
1. Test reinforcement to be used in accordance with ASTM D6706 using soil taken from project site.
2. Do not use more than one type of reinforcement attached to units within the same wall; do not use products made by different manufacturers in the same wall; minimize the number of different reinforcement and filter products to avoid confusion in placement.
3. Walls Less Than 12 feet High: Use only one type of reinforcement of one grade and strength.
4. NCMA Method: Determine in accordance with NCMA TR-127:
5. Length Back from Wall: Not less than dimensions shown on drawings.
6. Long Term Design Strength of Reinforcement: LTDS = Tult / (RFd x RFid x RFcr), where:
   a. Tult = Ultimate (tensile) strength per ASTM D4595.
   b. RFd = Reduction Factor for chemical and biological durability; minimum 2.0 if durability testing has not been conducted, otherwise 1.1 for High-density polyethylene. (HDPE), and 1.1 for polyethylene terephthalate (PET).
   c. RFid = Reduction Factor for Installation Damage; minimum 1.1 and 3.0 if testing per ASTM D5818 has not been conducted.
   d. RFcr = Reduction Factor for Creep; consistent with test procedure used for determining the ultimate strength per ASTM D5262.
   e. The product RFd x RFid x RFcr shall be greater than 2.0.

G. Drainage: Design to prevent water accumulation in retained soil; use drainage fill and drainage pipe as specified in Section 334100; provide outlets at 50 foot intervals along length of wall, minimum.

H. Minimum Factor of Safety: Design with the following stability requirements:
1. Sliding = 1.5.
2. Pullout = 1.5.
3. Tensile Overstress = 1.5.
4. Overturning = 2.0.
5. Bearing Capacity = 2.0.

2.03 MATERIALS

A. Retaining Wall Units: Machine-formed concrete blocks of shapes and sizes suitable for the retaining wall configuration required and complying with ASTM C1372 and the following:

1. Face Color: Natural cement gray; all units from same production run.
2. Texture: Split face, on exposed surfaces.
3. Face Shape: Straight (flat).
4. Curved Walls: Provide unit shapes that accommodate the required curves without cutting and with gaps between faces of adjacent units of not more than 1/8 inch and a minimum radius of 3 1/2 feet.
5. Acute Corners: Miter-cut corner units are acceptable; exposed faces finished to match.
6. Batter Dimensional Control: Provide integral positive control to maintain consistent batter dimension.
7. Shear Resistance Mechanism: Manufacturer's standard.
8. Moisture Absorption: 8 percent, maximum.
9. Dimensional Tolerances: Plus/minus 1/16 inch from specified dimension.
10. Appearance: No visible chips, cracks, or other imperfections when viewed from 10 feet under diffuse lighting.

B. Drainage Filter: Geosynthetic textile.
1. Apparent Opening Size: 70 to 100 U.S. Sieve size, when tested in accordance with ASTM D4751.
2. Permittivity: 0.5 per second, minimum, when tested in accordance with ASTM D4491/D4491M.
3. Durability: Comply with minimum requirements of AASHTO M 288 Class 1; minimum mass of 8 ounces per square yard.

C. Aggregate for Leveling Pad: Compacted sand, gravel, or crushed rock complying with the following:
1. Type A1 as specified in Section 312323 - Fill.
2. Do not use pea gravel.

D. Drainage Fill: Clean, freely draining aggregate placed within, between, or immediately behind segmental units; do not use pea gravel; use the following:
1. Type A3 as specified in Section 312323 - Fill.

E. Reinforced Backfill: Compacted soil placed behind drainage fill within reinforced soil mass; do not use heavy clay or organic soils; comply with the following:
1. As specified in Section 312323 - Fill.

F. Drainage Pipe: Perforated PVC, complying with ASTM D3034; or corrugated HDPE complying with ASTM ASTM F667/F667M; with geotextile filter wrap; 4 inch diameter.

PART 3 EXECUTION

3.01 EXAMINATION

A. Verify location of existing structures and utilities prior to excavation.

B. Protect adjacent structures from the effects of excavation.

C. Verify that layout dimensions are correct and substrate is in proper condition for installation.

D. Notify Architect of unsatisfactory conditions.

E. Do not proceed with installation until unsatisfactory conditions have been corrected.

3.02 PREPARATION

A. Sitework:

B. Excavation:
1. Excavate to lines and grades indicated on drawings.
2. Do not disturb embankment or foundation beyond lines. Minimize over-excavation; fill over-excavated areas with compacted reinforced backfill or leveling pad material at Contractor's expense.
3. Excavation support, if required, shall be the responsibility of the Contractor.

4. After excavation, and prior to placement of leveling materials, Geotechnical Engineer will examine bearing soil surface to verify strength meets or exceeds design requirements and assumptions.
5. Replace unsuitable bearing soil as directed by Geotechnical Engineer in accordance with requirements of Section 312316 - Excavation.
6. Embankment excavations shall be bench cut as directed by the project Geotechnical Engineer.

C. Leveling Pad:
1. Depth: As indicated on drawings.
2. Width: 6 inches minimum extension beyond front and back faces of units.
3. Location: Top of pad at 1 inch below grade for each 8 inches that wall extends above grade.
4. Compact aggregate to lines and grades on drawings, in lifts 6 inches thick, maximum.
5. Compact aggregate to a minimum of 95 percent standard Proctor density, when determined in accordance with ASTM D698 at moisture content within 2 percent of optimum.
6. Use only hand-operated compaction equipment within 36 inches of back of wall.

D. Verify level grade before proceeding.

E. Install drainage collection pipe with a continuous fall in the direction of flow; cap open ends as necessary to prevent soil and debris from entering.

3.03 INSTALLATION

A. Install in accordance with drawings, manufacturer instructions, and applicable codes and regulations.

B. Segmental Retaining Wall Units:
1. Place first course of units on leveling pad; check alignment and level. Check for full contact with base and for stability.
2. Place units side by side for full length of wall, aligning back face of straight walls using string line or offset from base line and back face of curved walls using flexible pipe or other method recommended by manufacturer.
3. Do not leave gaps between units.
4. Lay out corners and curves in accordance with manufacturer's instructions. Do not leave gaps to produce wall batter or curvature.
5. Cut blocks with saw; do not split units.
6. Sweep excess material from tops of units before laying succeeding courses.
7. Place a maximum of 2 succeeding courses above level backfill. Check for proper alignment and batter.
8. Where top of wall changes elevation, step units to match grade or turn top course into embankment.
9. Where bottom of wall changes elevation, step base leveling pad and extend lowest course a minimum of two units into slope.
10. Install shear connectors per manufacturer recommendations.

C. Soil Reinforcement: Install each layer on fully compacted fill.
1. Orient soil reinforcement material with highest strength axis perpendicular to wall alignment.
2. Attach to top of wall units and extend horizontally, full length, over compacted backfill slightly sloping downward away from wall.
3. Install in one piece lengths with 100 percent coverage in each layer at each level. Do not splice or leave gaps between panels or ends of pieces.
4. Pull taut and remove slack prior to backfill placement.

D. Drainage Fill: Place drainage fill in, between, and behind units.

1. Compact to lines and grades on drawings, in lifts 6 inches thick, maximum; decrease lift thickness where necessary to achieve required density.
2. Extend drainage fill 12 inches beyond back face of units.
3. Base of drainage fill elevation shall not exceed two courses or 16 inches from base of wall units.

E. Drainage Pipe:
1. Install and join pipe and pipe fittings in accordance with pipe manufacturer's instructions.
2. Place drainage pipe on drainage fill at elevations detailed.
3. Lay pipe to slope gradients noted on Drawings; with maximum variation from true slope of 1/8 inch in 10 feet.
4. Place pipe with perforations facing down.
5. Install pipe couplings.
6. Install filter aggregate at sides, over joint covers and top of pipe.

F. Backfill: Place, spread, and compact backfill from behind drainage fill to undisturbed soil while minimizing the development of slack in the soil reinforcement.
1. Use only lightweight hand-operated compaction equipment within 3 feet from back wall face, or one half of wall height, whichever is greater.
2. Place backfill in lifts of maximum 6 inches to 8 inches loose thickness where hand compaction is used and 8 inches to 10 inches where heavy equipment compaction is used.
3. Compact backfill to 95 percent maximum density and upper 2 feet of backfill to 98 percent maximum density, standard Proctor, as determined in accordance with ASTM D698, or as recommended by Geotechnical Engineer.
4. Moisture content of backfill prior to and during compaction to be within plus or minus 2 percentage points dry of optimum and uniform throughout each layer.
5. Do not operate tracked construction equipment directly upon soil reinforcement. Maintain a minimum fill thickness of 6 inches for operation of tracked vehicles over soil reinforcement. Minimize turning of tracked vehicles while over soil reinforcement.
6. Operate wheeled equipment at speeds less than 10 miles per hour over soil reinforcement.
7. Prevent contamination of the filter fabric, unit fill, blanket drains, chimney drains, and/or drainage composite from poor drainage materials such as fine grained silt and clay.
8. At end of each day, slope top of backfill away from wall to direct runoff away from wall face. Prevent runoff from adjacent areas from entering wall site.
9. At completion, if other work adjacent to wall is not to be done immediately (paving, landscaping, etc), grade top of backfill and provide temporary drainage to prevent water runoff toward the wall.

G. Cap Units: Install with masonry adhesive.
1. Clear cap units and top course of segmental retaining wall units of debris and standing water before applying adhesive.
2. Apply masonry adhesive to top surface of top unit and place cap into position over projecting pins. Protect wall face from masonry adhesive.

H. Site Drainage:
1. At end of each day:
   a. Grade backfill a minimum of 2 percent away from wall to prevent runoff from adjacent areas from entering wall site and to prevent ponding at the wall.
   b. Construct a berm at the crest of the wall to prevent surface water from overtopping.
2. At completion, if other work adjacent to wall is not to be done immediately (paving, landscaping, etc), grade top of backfill and provide temporary drainage to prevent water runoff toward the wall.
3. Surface water control and groundwater seepage shall be the responsibility of the project Architect.

3.04 TOLERANCES

A. Top of Wall:
   1. Plan Location: Maximum of plus/minus 1 inch from plan location.
   2. Elevation: Maximum of plus/minus 1 inch from elevations shown on drawings.

B. Face of Wall Flatness: Measured as deviation from a straight edge.
   1. In the Vertical Dimension: Plus/minus 1-1/4 inch per 10 foot section.
   2. In the Horizontal Dimension of Straight Walls: Plus/minus 1-1/2 inch per 10 foot section.

C. Overall Wall Batter: Within 2 degrees of design, measured from the vertical.

D. Gap Between Adjacent Units: 1/8 inch, maximum.

3.05 FIELD QUALITY CONTROL

A. See Section 014000 - Quality Requirements, for additional requirements.

B. Provide manufacturer's field representative to observe and inspect concrete units.

C. Observe and inspect:
   1. Concrete units: For correct type, for quality installation with courses that are level and follow the designed batter ratio.
   2. Soil backfill: For correct type, for specified compaction with level grading prior to reinforcement installation.
   3. Soil reinforcement: For correct type, for solid connection to concrete units, and for smooth and taut installation.
   4. Field location in plan and elevation.

D. Soil Tests: For every new soil type and/or for every 2,000 cubic yard per running foot perform Atterberg Limit, Sieve Analysis, and Proctor Compaction tests. Perform additional testing per project Architect.

E. Owner will engage inspection and testing services, including independent laboratories, to provide quality assurance and testing services during construction. Contractor will secure necessary construction control testing during construction.

F. Frequency of Compaction Testing: 1 for each lift for each 100 ft of wall length.

G. Notify the Contractor of any deficiencies in the retaining wall construction and provide the Contractor a reasonable opportunity to correct the deficiency.
   1. Notify the Contractor, Owner and Retaining Wall Design Engineer of any construction deficiencies that have not been corrected timely.

H. Contractor shall correct work found deficient and not in accordance with drawings and specifications.

3.06 CLEANING

A. Clean wall face to remove debris and stains.

B. Leave adjacent paved areas broom clean.

3.07 PROTECTION

A. Prevent damage to wall and earthwork by subsequent construction and uncontrolled runoff until substantial completion; repair damage due to failure to protect wall or earthwork.

B. Do not operate heavy paving or grading equipment within 36 inches from the back of the wall face.

C. Do not operate equipment with wheel loads in excess of 150 pounds per square foot live load within 10 feet from the wall face.

D. Do not place temporary soil or fill stockpiles adjacent to wall.

E. Replace damaged units prior to Date of Substantial Completion.

END OF SECTION 323223

SECTION 329223
SODDING

PART 1 GENERAL

1.01 SECTION INCLUDES

A. Preparation of subsoil.

B. Placing topsoil.

C. Fertilizing.

D. Sod installation.

E. Maintenance.

1.02 RELATED REQUIREMENTS

A. Section 312200 - Grading: Topsoil material.

B. Section 312200 - Grading: Preparation of subsoil and placement of topsoil in preparation for the work of this section.

1.03 DEFINITIONS

A. Weeds: Includes Dandelion, Jimsonweed, Quackgrass, Horsetail, Morning Glory, Rush Grass, Mustard, Lambsquarter, Chickweed, Cress, Crabgrass, Canadian Thistle, Nutgrass, Poison Oak, Blackberry, Tansy Ragwort, Bermuda Grass, Johnson Grass, Poison Ivy, Nut Sedge, Nimble Will, Bindweed, Bent Grass, Wild Garlic, Perennial Sorrel, and Brome Grass.

1.04 REFERENCE STANDARDS

A. TPI (SPEC) - Guideline Specifications to Turfgrass Sodding.

1.05 SUBMITTALS

A. See Section 013000 - Administrative Requirements, for submittal procedures.

B. Certificate: Certify grass species and location of sod source.

1.06 QUALITY ASSURANCE

A. Sod Producer: Company specializing in sod production and harvesting with minimum five years experience in hardiness zone 5 through 7.

1.07 REGULATORY REQUIREMENTS

A. Comply with regulatory agencies for fertilizer and herbicide composition.

1.08 DELIVERY, STORAGE, AND HANDLING

A. Deliver sod in rolls. Protect exposed roots from dehydration.

B. Do not deliver more sod than can be laid within 24 hours.

PART 2 PRODUCTS

2.01 MATERIALS

A. Sod: TPI (SPEC), Certified Turfgrass Sod quality; cultivated grass sod; type indicated below; with strong fibrous root system, free of stones, burned or bare spots; containing no more than 5 weeds per 1000 sq ft. Minimum age of 18 months, with root development that will support its own weight without tearing, when suspended vertically by holding the upper two corners.
   1. Tall Fescue Grass Type: 100 percent.
   2. Thickness: "Thin" sod, minimum 1/2 inch and maximum 1 inch topsoil base.
   3. Cut sod in area not exceeding 1 sq yd.
   4. Machine cut sod and load on pallets in accordance with TPI (SPEC) Guidelines.

B. Topsoil: Type S2 as specified in Section 312200 - Grading.

C. Fertilizer: recommended for grass, with fifty percent of the elements derived from organic sources; of proportion necessary to eliminate any deficiencies of topsoil, to the following proportions:
   1. Nitrogen: 12 percent.
   2. Phosphoric Acid: 12 percent.
   3. Soluble Potash: 12 percent.

D. Water: Clean, fresh and free of substances or matter that could inhibit vigorous growth of grass.

2.02 ACCESSORIES

A. Wood Pegs: Softwood, sufficient size and length to ensure anchorage of sod on slope.

PART 3 EXECUTION

3.01 EXAMINATION

A. Verify that prepared soil base is ready to receive the work of this section.

3.02 PREPARATION

A. Prepare subgrade in accordance with Section 312200 - Grading.

B. Place topsoil in accordance with Section 312200 - Grading.

3.03 FERTILIZING

A. Apply fertilizer at a rate of 2.5 lbs per 1 000 sf.

B. Apply after smooth raking of topsoil and prior to installation of sod.

C. Apply fertilizer no more than 48 hours before laying sod.

D. Lightly water to aid the dissipation of fertilizer.

3.04 LAYING SOD

A. Planting Season: March 15 through October 15.
   1. Sodding must be completed within planting season.

B. Moisten prepared surface immediately prior to laying sod.

C. Lay sod within 24 hours after harvesting to prevent deterioration.

D. Lay sod smooth and tight with no open joints visible, and no overlapping; stagger end joints 12 inches minimum. Do not stretch or overlap sod pieces.

E. Where new sod adjoins existing grass areas, align top surfaces.

F. Where sod is placed adjacent to hard surfaces, such as curbs, pavements, etc., place top elevation of sod 1/2 inch below top of hard surface.

G. On slopes 4 inches per foot and steeper, lay sod perpendicular to slope and secure every row with wooden pegs at maximum 2 feet on center. Drive pegs flush with soil portion of sod.

H. Water sodded areas immediately after installation. Saturate sod to 4 inches of soil.

I. After sod and soil have dried, roll sodded areas to ensure good bond between sod and soil and to remove minor depressions and irregularities.

3.05 MAINTENANCE

A. Provide maintenance at no extra cost to Owner; Owner will pay for water used from existing water system on site.

B. Provide maintenance of sodded areas for two months from date of sod installation or until sod has taken root. Notify Owner one-week prior to end of watering period.

C. Mow grass at regular intervals to maintain at a maximum height of 2-1/2 inches. Do not cut more than 1/3 of grass blade at any one mowing.

D. Neatly trim edges and hand clip where necessary.

E. Immediately remove clippings after mowing and trimming.

F. Water to prevent grass and soil from drying out.

G. Roll surface to remove irregularities.

H. Control growth of weeds. Apply herbicides in accordance with manufacturer's instructions. Remedy damage resulting from improper use of herbicides.

I. Immediately replace sod to areas that show deterioration or bare spots.

J. If Contractor chooses to delay planting due to weather conditions, Contractor assumes responsibility for erosion control and repair to landscape grading per requirements of Section 312200 - Grading.

END OF SECTION 329223

SECTION 334100
SUBDRAINAGE

PART 1 GENERAL

1.01 SECTION INCLUDES

A. Site Subdrainage Drainage Systems.

B. Filter aggregate and fabric and bedding.

1.02 RELATED REQUIREMENTS

A. Section 312316.13 - Trenching: Excavating and backfilling for site subdrainage systems.

1.03 REFERENCE STANDARDS

A. ASTM D2729 - Standard Specification for Poly(Vinyl Chloride) (PVC) Sewer Pipe and Fittings.

1.04 SUBMITTALS

A. See Section 013000 - Administrative Requirements, for submittal procedures.

B. Product Data: Provide data on pipe drainage products, pipe accessories, and fittings.

C. Project Record Documents: Record location of pipe runs, connections, cleanouts and principal invert elevations.

1.05 REGULATORY REQUIREMENTS

A. Conform to applicable code for materials and installation of the work of this section.

PART 2 PRODUCTS

2.01 PIPE MATERIALS

A. Polyvinyl Chloride Pipe: ASTM D2729; plain end, 4 inch inside diameter; with required fittings.

B. Use perforated pipe at subdrainage system; unperforated through sleeved walls.

2.02 AGGREGATE AND BEDDING

A. Filter Aggregate and Bedding Material: Fill Type A3 as specified in Section 312316.13 - Trenching.

B. Filter Aggregate and Bedding Material: Fill Type A3 as specified in Section 312323 - Fill.

2.03 CLEANOUT

A. Manufacturers:
   1. Jay R. Smith Mfg. Co.; Product 4261L: www.jrsmith.com
   2. Substitutions: Section 01600 Product Requirements.

B. Cleanout Box: Cast iron construction, round, dual flanged, secured lid:
   1. Lid Design: Scoriated with lifting device and "C.O." cast into lid.
   2. Nominal Lid and Frame Size: 8-3/4 inches diameter.

C. Cleanout Cover: Gasketed with ABS plug.
   1. Cleanout cover comes with cleanout box.

2.04 ACCESSORIES

A. Pipe Couplings: Solid plastic.

B. Geotextile Drainage Fabric: Non-biodegradable, non-woven; Mirafi-140N manufactured by TenCate. www.tencate.com

PART 3 EXECUTION

3.01 EXAMINATION

A. Verify that trench cut is ready to receive work and excavations, dimensions, and elevations are as indicated on Drawings.

3.02 PREPARATION

A. Hand trim excavations to required elevations. Correct over-excavation with compacted aggregate.

B. Remove large stones or other hard matter that could damage drainage piping or impede consistent backfilling or compaction.

3.03 INSTALLATION

A. Install and join pipe and pipe fittings in accordance with pipe manufacturer's instructions.

B. Place drainage pipe on clean cut subsoil.

C. Lay pipe to slope gradients noted on Drawings; with maximum variation from true slope of 1/8 inch in 10 feet.

D. Place pipe with perforations facing down.

E. Install pipe couplings.

F. Install filter aggregate at sides, over joint covers and top of pipe. Provide top cover compacted thickness of 12 inches.

G. Place filter fabric over levelled top surface of aggregate cover prior to subsequent backfilling operations.

H. Place aggregate in maximum 6 inch lifts, consolidating each lift.

I. Refer to Section 312323 - Fill for compaction requirements. Do not displace or damage pipe when compacting.

J. Place impervious fill over drainage pipe aggregate cover and compact.

K. Connect to storm sewer system with unperforated pipe .

L. Coordinate the Work with connection to Metropolitan St. Louis Sewer District system and trenching through public rights-of-way or easements.

3.04 FIELD QUALITY CONTROL

A. Section 014000 - Quality Requirements: Field inspection and testing.

B. Request inspection prior to and immediately after placing aggregate cover over pipe.

3.05 PROTECTION

A. Protect pipe and aggregate cover from damage or displacement until backfilling operation begins.

END OF SECTION 334100

SECTION 334211
STORMWATER GRAVITY PIPING

PART 1 GENERAL

1.01 SECTION INCLUDES

A. Stormwater drainage piping.

B. Stormwater pipe accessories.

1.02 RELATED REQUIREMENTS

A. Section 312316.13 - Trenching: Excavating, bedding, and backfilling.

B. Section 334230 - Stormwater Drains.

1.03 REFERENCE STANDARDS

A. ASTM A48/A48M - Standard Specification for Gray Iron Castings.

B. ASTM D2321 - Standard Practice for Underground Installation of Thermoplastic Pipe for Sewers and Other Gravity-Flow Applications.

C. ASTM D3034 - Standard Specification for Type PSM Poly(Vinyl Chloride) (PVC) Sewer Pipe and Fittings.

1.04 ADMINISTRATIVE REQUIREMENTS

A. Coordination: Coordinate the installation of stormwater gravity piping with size, location and installation of stormwater drains according to Section 334230.

B. Sequencing: Ensure that utility connections are achieved in an orderly and expeditious manner.

1.05 SUBMITTALS

A. See Section 013000 - Administrative Requirements, for submittal procedures.

B. Product Data: Provide data indicating pipe, pipe accessories.

C. Field Quality Control Submittals: Document results of field quality control testing.

D. Project Record Documents:
   1. Record location of pipe runs, connections, and invert elevations.
   2. Identify and describe unexpected variations to subsoil conditions or discovery of uncharted utilities.

1.06 REGULATORY REQUIREMENTS

PART 2 PRODUCTS

2.01 STORMWATER PIPE MATERIALS

A. Provide products that comply with Metropolitan St. Louis Sewer District standards.

B. Plastic Pipe: ASTM D3034, SDR 35, Type PSM, Poly Vinyl Chloride (PVC) material; inside nominal diameter as indicated on drawings, bell and spigot style solvent sealed joint end.

2.02 PIPE ACCESSORIES

A. Fittings: Same material as pipe molded or formed to suit pipe size and end design, in required tee, bends, elbows, cleanouts, reducers, traps and other configurations required.

B. Downspout Boots: Smooth interior without boxed corners or choke points; include integral lug slots and on-body cleanout and cover with neoprene gaskets.
   1. Configuration: Angular.
   2. Material: Cast iron; ASTM A48/A48M; casting thickness 3/8 inch (9.5 mm), minimum.
   3. Color: To be selected by Architect from manufacturer's full range.
   4. Accessories: Manufacturer's standard stainless steel fasteners, stainless steel building wall anchors, and rubber coupling.

C. Substitutions: See Section 01 6000 - Product requirements.

2.03 CLEANOUT COMPONENTS

A. Manufacturers:
   1. Jay R. Smith Mfg. Co.; Product 4261L: www.jrsmith.com
   2. Substitutions: Section 01600 Product Requirements.

B. Cleanout Box: Cast iron construction, round, dual flanged, secured lid:
   1. Lid Design: Scoriated with lifting device and "C.O." cast into lid.
   2. Nominal Lid and Frame Size: 8-3/4 inches diameter.

C. Cleanout Cover: Gasketed with ABS plug.
   1. Cleanout cover comes with cleanout box.

2.04 CONCRETE:

A. Compressive strength: Minimum 3,000 psi at 28 days.

B. Air entrainment: Minimum 5%.

C. Slump: Maximum 4 inches.

D. Finish: Broom finish.

2.05 BEDDING AND COVER MATERIALS

A. Bedding: As specified in Section 312316.13 - Trenching.

B. Cover: As specified in Section 312316.13 - Trenching.

PART 3 EXECUTION

3.01 TRENCHING

A. See Section 312316.13 - Trenching for additional requirements.

B. Hand trim excavation for accurate placement of pipe to elevations indicated.

C. Backfill around sides and to top of pipe with bedding Fill Type A5 or A6 as appropriate for pipe size, tamp in place and compact, then complete backfilling.

3.02 INSTALLATION

A. Verify that trench cut is ready to receive work and excavations, dimensions, and elevations are as indicated on drawings.

B. Install pipe, fittings, and accessories in accordance with manufacturer's instructions. Seal watertight.
   1. Plastic Pipe: Also comply with ASTM D2321.

C. Lay pipe to slope gradients noted on layout drawings; with maximum variation from true slope of 1/8 inch in 10 feet.

D. Coordinate the Work with connection to Metropolitan St. Louis Sewer District system and trenching through public rights-of-way or easements.

3.03 INSTALLATION - SMALL YARD DRAINS

A. Form bottom of excavation clean and smooth to correct elevation.

B. Assemble yard drain in accordance with manufacturer's instructions.

C. Establish elevations and pipe inverts for inlets and outlets as indicated on drawings.

D. Install to elevation indicated.

E. Install grate.

3.04 INSTALLATION - CLEANOUTS

A. Verify and adjust pipe elevation as necessary prior to installing cleanout frame and cover.

B. Install frame and cover onto pipe.

C. Set forms for concrete collar.

D. Pour concrete for concrete collar.

E. Leave forms in place to protect concrete collar while curing for minimum 7 days.

F. Stirp forms and finish grade or pave to concrete collar edges.

G. Remove concrete forms and place backfill or pavement around concrete collar as indicated on drawings.

3.05 FIELD QUALITY CONTROL

A. Perform field inspection and testing in accordance with Section 014000 - Quality Requirements.

B. If tests indicate Work does not meet specified requirements, remove Work, replace and retest at no cost to Owner.
   1. Infiltration Test: Test in accordance with Metropolitan St. Louis Sewer District standards.
   2. Deflection Test: Test in accordance with Metropolitan St. Louis Sewer District standards.

3.06 PROTECTION

A. Protect pipe and bedding cover from damage or displacement until backfilling operation is in progress.

END OF SECTION 334211

SECTION 334230
STORMWATER DRAINS

PART 1 GENERAL

1.01 SECTION INCLUDES

A. Precast concrete catch basins.

B. Prefabricated drop inlets.

C. Frames and grates.

1.02 RELATED REQUIREMENTS

A. Section 312316 - Excavation.

B. Section 312323 - Fill.

C. Section 330561 - Concrete Manholes.

D. Section 334211 - Stormwater Gravity Piping.

1.03 REFERENCE STANDARDS

A. AASHTO HB - Standard Specifications for Highway Bridges.

B. ASTM C478/C478M - Standard Specification for Circular Precast Reinforced Concrete Manhole Sections.

C. ASTM C923/C923M - Standard Specification for Resilient Connectors Between Reinforced Concrete Manhole Structures, Pipes, and Laterals.

D. ASTM C990 - Standard Specification for Joints for Concrete Pipe, Manholes, and Precast Box Sections Using Preformed Flexible Joint Sealants.

E. ASTM C1634 - Standard Specification for Dry-Cast Concrete Facing Brick and Other Concrete Masonry Facing Units.

1.04 ADMINISTRATIVE REQUIREMENTS

A. Coordination: Installation of stormwater drains with piping and other structures.
   1. See Section 334211 for stormwater gravity piping.

B. Sequencing: Ensure that utility connections are achieved in an orderly and expeditious manner.

1.05 SUBMITTALS

A. See Section 013000 - Administrative Requirements for submittal procedures.

B. Product Data: Weight rating for catch basins, drop inlets, and frame and grates.

C. Shop Drawings: Indicate stack assembly, invert elevations, opening sizes, and pipe angles.

D. Manufacturer's Installation Instructions: Indicate special procedures for assembly.

E. Project Record Documents:
   1. Record invert elevations of catch basins and drop inlets.
   2. Identify and describe unexpected variations to subsoil conditions or discovery of uncharted utilities.

PART 2 PRODUCTS

2.01 CATCH BASINS

A. Weight Rating: H 10 according to AASHTO HB.

B. Precast Concrete Catch Basins: Comply with ASTM C478/C478M, reinforced.
   1. Wall Thickness: 6 inches (152 mm).
   2. Base Thickness: 12 inches (305 mm).
   3. Reinforcement: Formed steel wire, galvanized finish, wire diameter as indicated on drawings.

4. Joint Sealant: Comply with ASTM C990.

C. Grade Adjustments:
   1. Concrete Bricks: ASTM C1634 or ASTM C55 Grade N, cored, normal weight; 4 by 8 by 3 inches.

D. Frames and Grates: Steel, checkerboard pattern, 33 1/4 by 33 1/4 inch.

2.02 DROP INLETS

A. Weight Rating: Pedestrian according to AASHTO HB.

B. Prefabricated Drop Inlet: Polymer concrete, glass fiber reinforced, metal installation brackets.

C. Frames and Grates: Galvanized steel support, steel grate, checkerboard pattern, match drain opening size.

2.03 ACCESSORIES

A. Steps: Formed galvanized steel rungs; 3/4 inch diameter. Formed integral with manhole sections.

PART 3 EXECUTION

3.01 EXAMINATION

A. Verify items provided by other sections of work are properly sized and located.

B. Verify built-in items are in proper location and ready for roughing into work.

C. Verify excavation location and depth are correct.

3.02 EXCAVATION AND FILL

A. Hand trim excavation for accurate placement to indicated elevations.

B. Backfill with cover fill, tamp in place and compact, then complete backfilling.

3.03 INSTALLATION

A. Establish elevations and pipe inverts for inlets and outlets as indicated in drawings.

B. Precast Concrete Catch Basins:
   1. Place base section plumb and level.
   2. Install joint sealant uniformly around section lip.

C. Prefabricated Drop Inlets, Trench Drains, or Slot Drains:
   1. Place base section plumb and level.
   2. Install according to manufacturer's instructions.
   3. Secure installation brackets.
   4. Protect drain from foreign material.

D. Grade Adjustments:
   1. Lay brick or masonry units uniformly on mortar bed with full head joints, running bond. Top with mortar, plumb and level.
   2. Place adjacent materials tight and smooth following design grades.

E. Frames and Grates:
   1. Place frame plumb and level.
   2. Mount frame on prefabricated drop inlets or trench drains according to manufacturer's instructions.
   3. Place grate in frame securely.

3.04 FIELD QUALITY CONTROL

A. See Section 014000 - Quality Requirements for additional requirements.

B. Perform field inspection for pipe invert elevations.

C. If inspections indicate work does not meet specified requirements, adjust work and reinspect at no cost to Owner.

END OF SECTION 334230