October 23, 2026

PROJECT NAME: FREEDOM HIGH SCHOOL – NEW BATTING CAGES

ADDRESS: 1050 NEROLY ROAD, OAKLEY CA 94561

APPLICATION NO: 01-123111

ADDENDUM #1

This Addendum forms part of the Contract Documents and modifies the Original Bidding Documents and previous Addenda as noted below. Acknowledge receipt of this Addendum in the space provided in the Bid Form. Changes have been captured on Architectural sheets with a “Delta 1”.

GENERAL:

ITEM NO. 1.1. SHEET A103 BATTING CAGE SURFACE

a) Concrete slab and synthetic turf at the home plate end of Batting Cage 2 (between Grid 5 and Grid 6) deleted and replaced with decomposed granite (DG), per recent site meeting with the Athletic Director. Synthetic turf over concrete slab remains from Grid 1 to Grid 5 at Batting Cage 2. At Batting Cage 1, the home plate bay (between Grid 5 and Grid 6) is new infield mix per District standard (Key Note 115); synthetic turf remains from Grid 2 to Grid 5 (Key Note 116). Section 32 18 13 applies to turf areas only; DG areas per new Section 32 15 40.
b) Key Notes 115 and 116 added: "(N) INFIELD MIX PER DISTRICT STANDARD" and "(N) SYNTHETIC TURF". LEGEND: added "(N) SYNTHETIC TURF O/ NEW CONC. SLAB", "(N) DECOMPOSED GRANITE", "(E) SYNTHETIC TURF", "(E) INFIELD MIX" and "(N) INFIELD MIX PER DISTRICT STANDARD".
c) Home plate (Key Note 110) at the cages is set in concrete per Detail 2/A503.

ITEM NO. 1.2. SHEET A103 BULLPENS #1 AND #2

a) Bullpens #1 and #2 extended to 55'-0" overall length.
b) Concrete slab and synthetic turf at both bullpens deleted and replaced with decomposed granite (DG).
c) Concrete mow strip added at the base of perimeter fencing at DG areas. Key Note 114 added; see Sheet A103 and Detail 5/A501.
d) Home plate (Key Note 110, Detail 2/A503) and pitching rubber (Key Note 108, Detail 4/A503) are set in concrete.

ITEM NO. 1.3. SHEET A103 KEY NOTE 112 CFS AT PITCH MACHINE

a) Key Note 112 revised to read: "PROVIDE 30" X 48" CLEAR FLOOR SPACE @ PITCH MACHINE" (was "CFS").
b) Clear floor space (CFS) shall be level (1:48 max. slope in any direction), firm, stable and slip-resistant per CBC 11B-302 and 11B-305.

ITEM NO. 1.4. SHEETS A103, A503 PITCHING MACHINES

a) Contractor shall furnish and install one pitching machine at each pitch machine location (Sheet A103, Key Note 103), per the TriplePlay Plus data sheet in Section 11 68 33.33 attachments, or equal.
b) Sheet A503, Detail 1: quantity note revised from "(3) units" to "(2) units - Batting Cages 1, 2". List price on data sheet deleted.

ITEM NO. 1.5. SHEETS A103, A503 HOME PLATE AND RUBBER

a) Section 11 68 33.33: added TBPR - TurfBase Pitching Rubber and TBHP - TurfBase Home Plate, Sportsfield Specialties, Inc. (Attachments 3 and 4). "Refer to Specification" on Sheet A503 now has a specification.
b) Sheet A103: Key Note 108 revised to "(N) PITCHING RUBBER SEE 4/A503" (was "(N)PITCHER RUBBER SEE 4/A503"). Key Note 110 revised to "(N) HOME PLATE SEE 2/A503" (was "(N) HOME BASE SEE 2/A503").
c) Sheet A503, Detail 2: note added: "TOP OF PLATE TO BE 1/4" ABOVE ADJACENT SURFACE TOP OF FINISH".
d) Sheet A503, Detail 4: "(N) RUBBER PITCHER MOUND" revised to "(N) PITCHING RUBBER, SEE SPECIFICATIONS".

ITEM NO. 1.6. SHEETS A103, A501 CAGE GATES

a) Gates at the batting cages enlarged to 48" (4'-0") clear (was 3'-0" CLR, Detail 4/A501). Revised on Sheets A103 and A501. Bullpen gates unchanged.

ITEM NO. 1.7. SHEET A302 CHAINLINK ELEVATIONS

a) KEY NOTES revised to match chain link construction (same as Sheets A303 and A304):
    a. Key Note 100: "NEW GALVANIZED 4" DIA. POLE" (was "NEW POLE BY MFR.").
    b. Key Note 101: "METAL CHAINLINK FABRIC" (was "NEW FABRIC NETTING BY MFR").
    c. Key Note 102 unchanged.

ITEM NO. 1.8. SHEET A503 DETAILS SYNTHETIC TURF DETAIL

a) Reference "E / D2.1" at Detail 2 deleted. There is no Sheet D2.1 in this set.

ITEM NO. 1.9. SPEC SECTION 11 68 33.43

a) "Athletic Field Equipment 11 68 33.43 - Track and Field Equipment" (discus cage) is not part of this project. Deleted from the Project Manual.

ITEM NO. 1.10. SPEC SECTION 32 15 40 DECOMPOSED GRANITE

a) New Section 32 15 40 Decomposed Granite Surfacing added to the Project Manual (Attachment 5).
b) Applies to the DG areas at both bullpens and at the home plate end of the batting cages (Sheet A103).

ITEM NO. 1.11. PROJECT MANUAL TABLE OF CONTENTS

a) Page 7, Division 11: "11 65 00 ATHLETIC AND RECREATIONAL EQUIPMENT" revised to "11 68 33.33 BASEBALL FIELD EQUIPMENT". No section is missing.
b) Page 8, Division 32: "32 15 40 DECOMPOSED GRANITE SURFACING" added. Revised pages attached (Attachment 6).

ITEM NO. 1.12. BIDDING DOCUMENTS (FRONT END SPECS)

a) Bidding Documents reissued dated October 23, 2026 (Attachment 2), replacing the June 12, 2026 front end. LUHSD Bid No. 26-27-04.
b) Bids due prior to Thursday, November 5, 2026 at 2:00 PM, 19 Oak Street, Brentwood, CA (was "Date to be Determined").
c) Mandatory pre-bid conference: Thursday, October 29, 2026 at 3:30 PM at Freedom High School (meet at the Front Entry to the Performing Arts Center, off of Brown Road).
d) Contract Time is 9 weeks (was 10 weeks).

ATTACHMENTS:

1. REVISED DRAWINGS: SHEETS A103, A302, A501 AND A503
2. REVISED FRONT END SPECIFICATIONS (BIDDING DOCUMENTS DATED OCTOBER 23, 2026)
3. SPEC SECTION 11 68 33.33 - TBPR TURFBASE PITCHING RUBBER (3-PART SPECIFICATION AND CUT SHEET)
4. SPEC SECTION 11 68 33.33 - TBHP TURFBASE HOME PLATE (3-PART SPECIFICATION AND CUT SHEET)
5. SPEC SECTION 32 15 40 - DECOMPOSED GRANITE SURFACING (NEW)
6. PROJECT MANUAL TABLE OF CONTENTS (REVISED)

Thank you and please call or email with any
further questions.

Rodolfo Chacon, Architect
925-505-8094 cell

END OF ADDENDUM NO. 1

ATTACHMENT 1

REVISED DRAWINGS
Sheets A103, A302, A501 and A503

Autodesk Docs://Freedom HS _New Batting Cages/Freedom High School.rvt

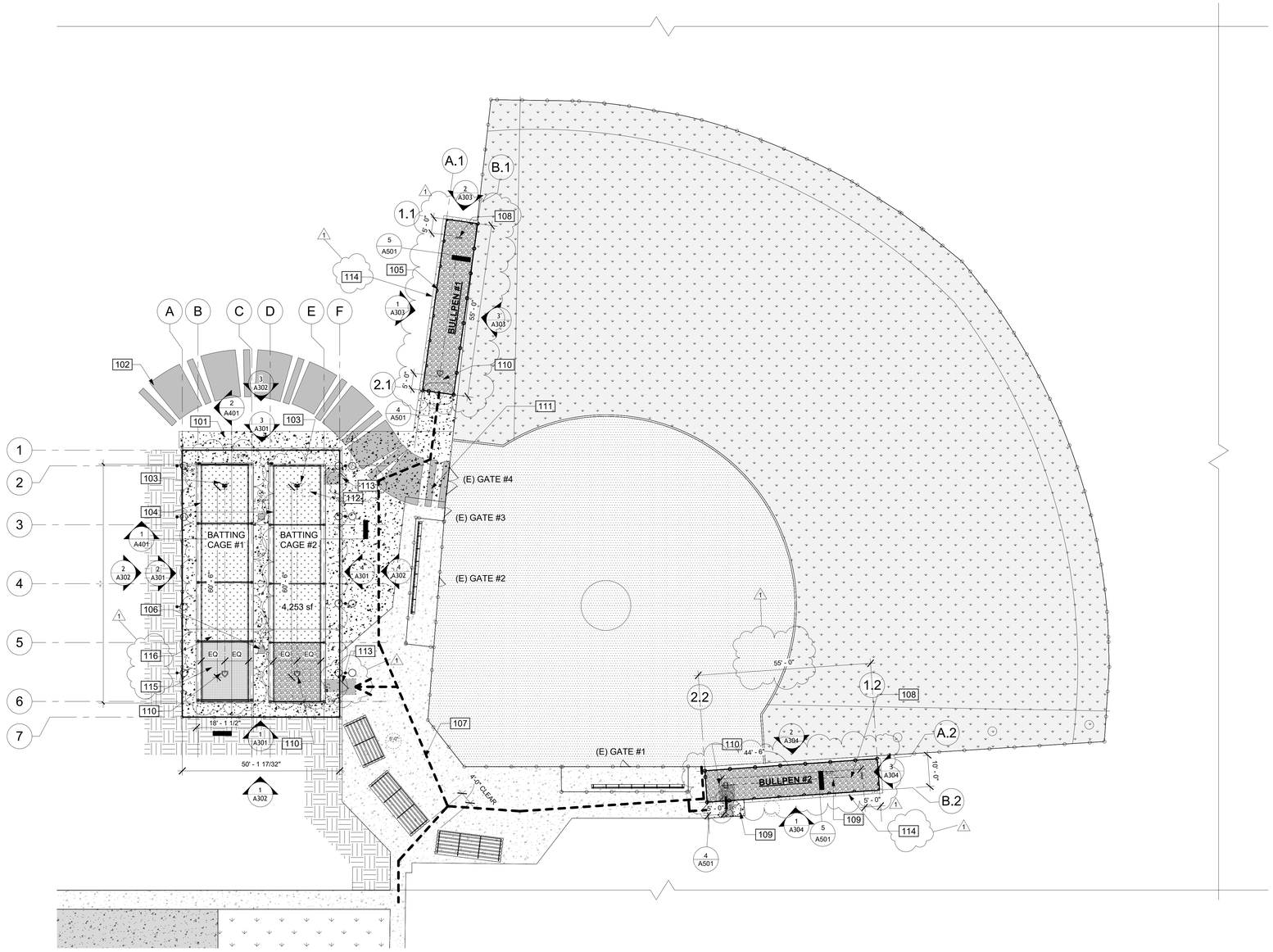

1 PROPOSED ENLARGED PLAN
1/16" = 1'-0"

KEY NOTES

101	NEW CONCRETE SLAB
102	INDICATES SERVICE VEHICLE ACCESS
103	(N) PITCH MACHINE, SEE 1/A503
104	(N) BATTING CAGES
105	(N) CHAINLINK FENCING SEE 9/A501
106	(N) AREA DRAIN TIE INTO SD
107	(N) ACCESSIBLE PATH OF TRAVEL. SEE A101 FOR SITE WIDE PATH OF TRAVEL
108	(N)PITCHING RUBBER SEE 4/A503
109	5'-0" DIAMETER TURNING CLEARANCE
110	(N) HOME PLATE SEE 2/A503
111	FILL IN THIS AREA WITH HARDSCAPE
112	PROVIDE 30" X 48" CLEAR FLOOR SPACE @ PITCH MACHINE
113	(N) 4'-0" X 7'-0" CHAINLIKE GATE
114	(N) CONCRETE MOW STRIP SEE 5/A501
115	(N) INFIELD MIX PER DISTRICT STANDARD
116	(N) SYNTHETIC TURF

LEGEND

- ACCESSIBLE PATH OF TRAVEL
- (E) FIRE HYDRANT
- (E) CHAINLINK FENCING
- (N) CHAINLINK FENCING SEE 9/A501
- (E) PROPERTY LINE
- (E) GRADE
- (E)CONCRETE PAVING
- (E) ASPHALT CONCRETE PAVING
- (E) SYNTHETIC TURF
- (N) SYNTHETIC TURF O/ NEW CONC. SLAB
- 20' FIRE LANE
- (N) CONCRETE SLAB
- (N) NEW STORM DRAIN INLET
- (N) DUAL HEAD POLE LIGHTS SEE ELECTRICAL DRAWING
- (N) SINGLE HEAD POLE LIGHTS SEE ELECTRICAL DRAWING
- (N) SERVICE VEHICLE PATH
- (N) GATE MANEUVERING CLEARANCES (4'-0", 1'-0", 2'-0", 6'-0")
- (N) DECOMPOSED GRANITE
- (E) INFIELD MIX
- (N) INFIELD MIX PER DISTRICT STANDARD

GENERAL NOTES

1. CONTRACTOR SHALL VERIFY ALL EXISTING SITE CONDITIONS AND DIMENSIONS PRIOR TO COMMENCEMENT OF WORK. NOTIFY ARCHITECT OF ANY DISCREPANCIES.
2. CONTRACTOR SHALL CONTACT UNDERGROUND SERVICE ALERT (811) A MINIMUM OF 48 HOURS PRIOR TO ANY EXCAVATION ACTIVITIES.
3. PROTECT ALL EXISTING UTILITIES, STRUCTURES, LANDSCAPING, IRRIGATION, PAVING, FENCING, AND SITE IMPROVEMENTS TO REMAIN. REPAIR OR REPLACE ANY DAMAGE CAUSED BY CONSTRUCTION AT NO ADDITIONAL COST TO THE OWNER.
4. ALL WORK SHALL COMPLY WITH THE CURRENT CALIFORNIA BUILDING CODE (CBC), CALIFORNIA FIRE CODE (CFC), CALIFORNIA ELECTRICAL CODE (CEC), CALIFORNIA PLUMBING CODE (CPC), AND ALL APPLICABLE DSA REQUIREMENTS.
5. PROVIDE A CONTINUOUS ACCESSIBLE ROUTE TO THE BATTING CAGE FACILITY IN ACCORDANCE WITH CBC CHAPTER 11B.
6. CONTRACTOR SHALL MAINTAIN EXISTING FIRE DEPARTMENT ACCESS ROADS AND EMERGENCY EGRESS PATHS DURING CONSTRUCTION.
7. ALL EXCAVATION, FILL, AND COMPACTION SHALL CONFORM TO THE PROJECT GEOTECHNICAL REPORT AND DSA-APPROVED STRUCTURAL DOCUMENTS.
8. VERIFY LOCATIONS OF EXISTING UNDERGROUND UTILITIES PRIOR TO INSTALLATION OF FOOTINGS, FOUNDATIONS, AND SITE IMPROVEMENTS.
9. COORDINATE ALL ELECTRICAL WORK WITH EXISTING CAMPUS ELECTRICAL SYSTEMS. VERIFY LOCATIONS OF EXISTING PULL BOXES, CONDUITS, AND ELECTRICAL EQUIPMENT PRIOR TO CONSTRUCTION.
10. PROVIDE POSITIVE DRAINAGE AWAY FROM ALL FOUNDATIONS, SLABS, AND STRUCTURES.
11. ALL FENCING, NETTING, POSTS, FOUNDATIONS, AND STRUCTURAL COMPONENTS SHALL BE INSTALLED IN ACCORDANCE WITH APPROVED STRUCTURAL DRAWINGS.
12. FIELD VERIFY ALL EXISTING GRADES. CONTRACTOR SHALL NOTIFY ARCHITECT OF CONDITIONS DIFFERING FROM THOSE SHOWN ON THE DRAWINGS.
13. REMOVE AND LEGALLY DISPOSE OF ALL DEMOLISHED MATERIALS OFF SITE UNLESS OTHERWISE NOTED.
RESTORE ALL DISTURBED AREAS TO MATCH EXISTING ADJACENT CONDITIONS
14. ALL CONSTRUCTION ACTIVITIES SHALL COMPLY WITH DISTRICT REQUIREMENTS FOR SAFETY, SECURITY, AND CAMPUS OPERATIONS.

LICENSED ARCHITECT
RODOLFO L. CHACON
No. C 28654
Ren.
STATE OF CALIFORNIA

REVISION	DESCRIPTION

FREEDOM HIGH SCHOOL

BASEBALL INFIELD & SOFTBALL OUTFIELD IMPROVEMENTS

1050 Neroly Road
Oakley, CA 94561

CHACON ARCHITECTURE
RODOLFO L.CHACON
EMAIL: rodolfo@chaconarchitecture.com
PHONE: 925-504-8098
ADDRESS : 2106 BOLERO,
BAY POINT, CA. 94565
WWW.CHACONARCHITECTURE.COM

Project Number
Issue Date

KEY MAP

SHEET TITLE
PROPOSED ENLARGED PLAN

A103

PLOT DATE: 10/26/2026 10:11:22 AM

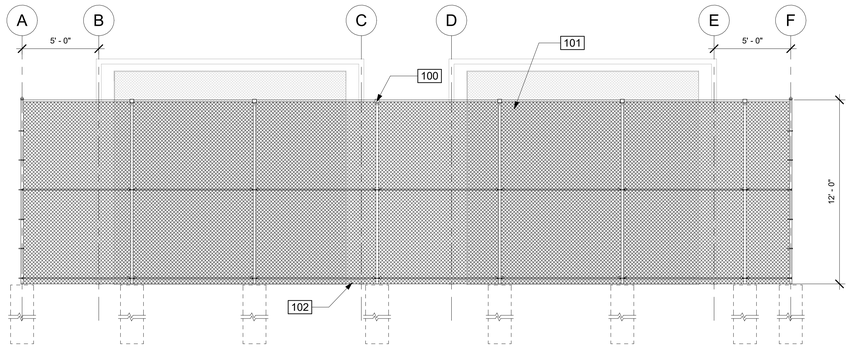

1 CHAINLINK NORTH ELEVATION
1/4" = 1'-0"

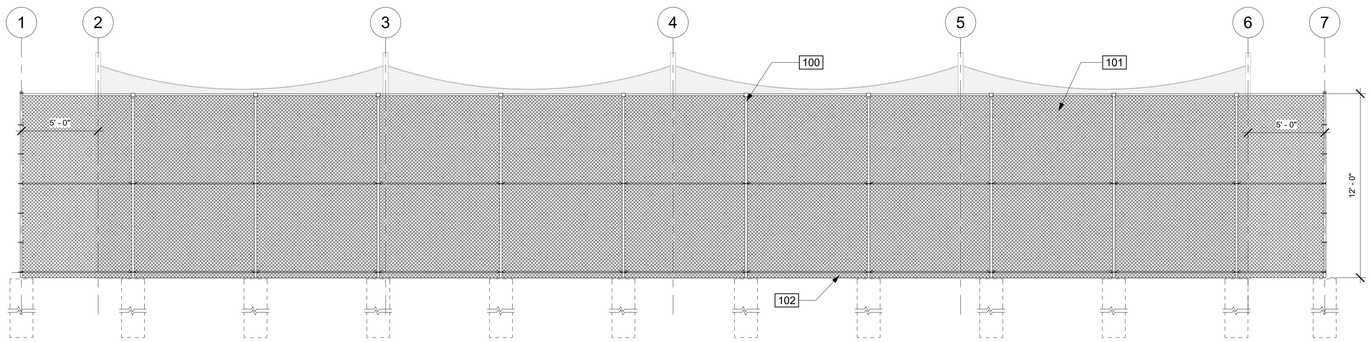

2 CHAINLINK EAST ELEVATION
1/4" = 1'-0"

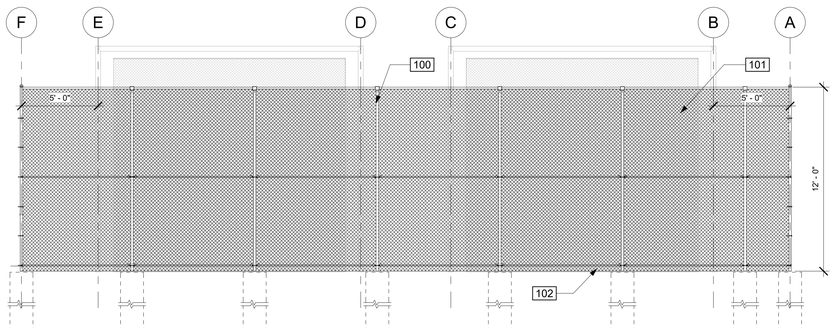

3 CHAINLINK SOUTH ELEVATION
1/4" = 1'-0"

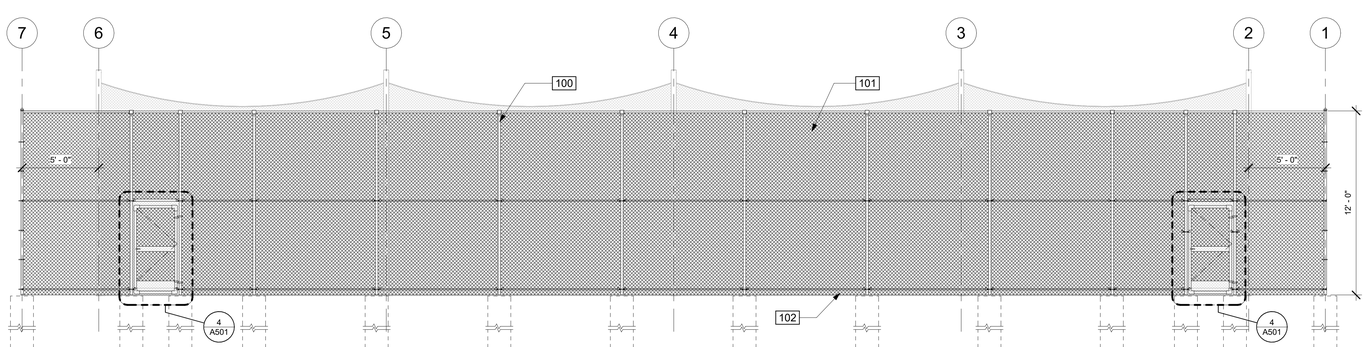

4 CHAINLINK WEST ELEVATION
1/4" = 1'-0"

KEY NOTES

100	NEW GALVANIZED 4" DIA. POLE
101	METAL CHAINLIKE FABRIC
102	NEW CONCRETE SLAB

1

GENERAL KEYNOTES

1. PROVIDE COMPLETE BATTING CAGE SYSTEM INCLUDING POSTS, CABLES, NETTING, HARDWARE, FOOTINGS, AND ACCESSORIES AS SHOWN.
2. ALL STEEL POSTS, FRAMES, CABLES, CONNECTIONS, AND HARDWARE SHALL CONFORM TO THE STRUCTURAL DRAWINGS.
3. CONTRACTOR SHALL VERIFY ALL DIMENSIONS AND SITE CONDITIONS PRIOR TO FABRICATION AND INSTALLATION.
4. NETTING SHALL BE UV-STABILIZED, HIGH-TENACITY KNOTLESS NYLON OR APPROVED EQUAL SUITABLE FOR OUTDOOR ATHLETIC USE.
5. NETTING SHALL BE SECURELY ATTACHED TO SUPPORT CABLES AND FRAMING MEMBERS IN ACCORDANCE WITH MANUFACTURER'S RECOMMENDATIONS.
6. PROVIDE TENSIONED CABLE SYSTEM TO MAINTAIN NET ALIGNMENT AND MINIMIZE SAG.
7. INSTALL ALL POSTS PLUMB AND TRUE.
8. ALL EXPOSED STEEL SHALL BE HOT-DIP GALVANIZED OR FACTORY FINISHED FOR EXTERIOR EXPOSURE.
9. FIELD TOUCH-UP OF DAMAGED GALVANIZED OR COATED SURFACES SHALL BE PROVIDED AFTER INSTALLATION
10. COORDINATE LOCATIONS OF FOOTINGS WITH EXISTING UTILITIES PRIOR TO EXCAVATION.
11. CONTRACTOR SHALL VERIFY CLEARANCES TO EXISTING SITE FEATURES, FENCING, DRAINAGE STRUCTURES, AND ELECTRICAL EQUIPMENT PRIOR TO INSTALLATION.
12. NETTING SHALL BE FREE OF TEARS, DEFECTS, OR DAMAGE AT TIME OF SUBSTANTIAL COMPLETION.
13. PROVIDE ALL REQUIRED BRACING, GUYING, AND CONNECTIONS NECESSARY TO RESIST DESIGN WIND LOADS.
14. INSTALLATION SHALL COMPLY WITH MANUFACTURER'S WRITTEN INSTRUCTIONS.
15. ALL DIMENSIONS ARE TO FACE OF POSTS UNLESS NOTED OTHERWISE.
16. PROVIDE PITCHING MACHINE ANCHOR SYSTEM PER MANUFACTURER'S REQUIREMENTS.
17. COORDINATE ELECTRICAL POWER REQUIREMENTS FOR PITCHING MACHINES WITH ELECTRICAL DRAWINGS.
18. PROVIDE SYNTHETIC TURF SURFACE WITH SEAMS, INFILL, AND ACCESSORIES INSTALLED IN ACCORDANCE WITH MANUFACTURER'S REQUIREMENTS.
19. ALL TURF TRANSITIONS SHALL BE FLUSH AND FREE OF TRIP HAZARDS.
20. BATTING CAGE SYSTEM SHALL BE DESIGNED AND INSTALLED TO WITHSTAND APPLICABLE WIND LOADS INDICATED IN THE STRUCTURAL DRAWINGS.

REVISION	DESCRIPTION
1	ADDENDUM #001-10.23.2026

FREEDOM HIGH SCHOOL

BASEBALL INFIELD & SOFTBALL OUTFIELD IMPROVEMENTS

1050 Neroly Road
Oakley, CA 94561

CHACON ARCHITECTURE

RODOLFO L.CHACON
EMAIL: rodolfo@chaconarchitecture.com
PHONE: 925-504-8098
ADDRESS : 2106 BOLERO,
BAY POINT, CA. 94565

WWW.CHACONARCHITECTURE.COM

Project Number

Issue Date

KEY MAP

SHEET TITLE

CHAINLINK ELEVATIONS

A302

Autodesk Docs://Freedom HS _New Batting Cages/Freedom High School.rvt

PLOT DATE: 9/15/2026 4:46:40 PM

Autodesk Docs://Freedom HS _New Batting Cages/Freedom High School.rvt

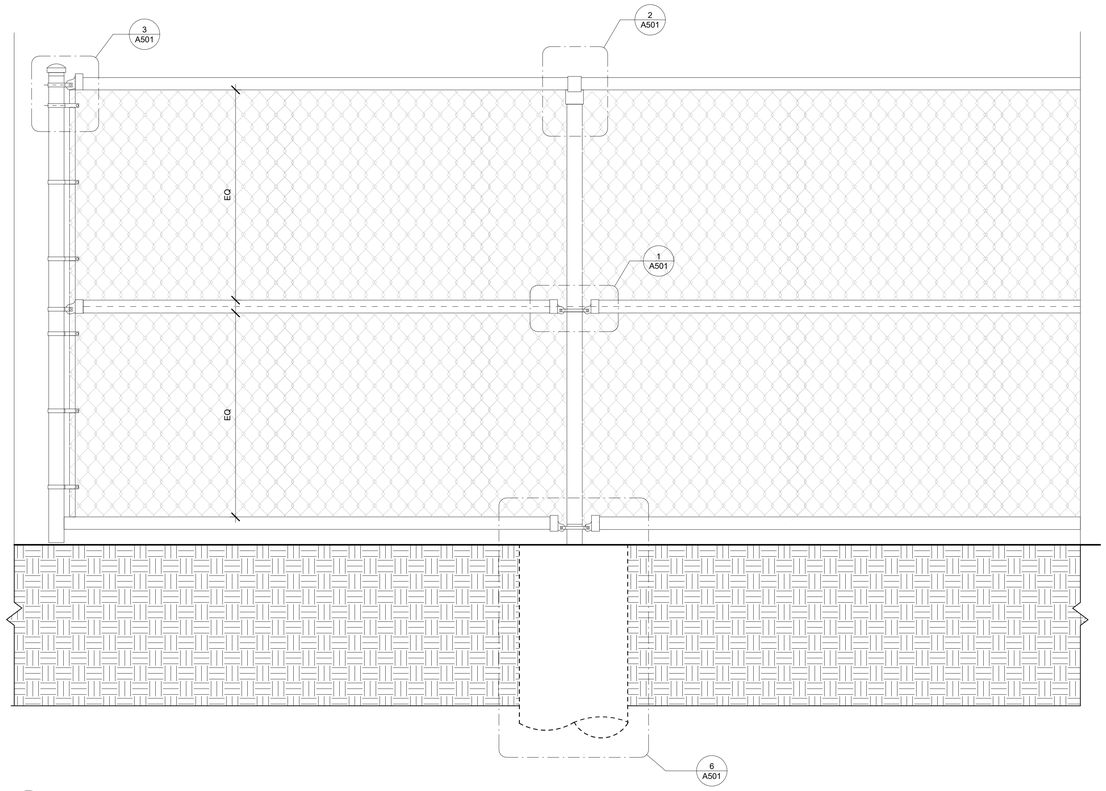

9 GATE
1 1/2" = 1'-0"

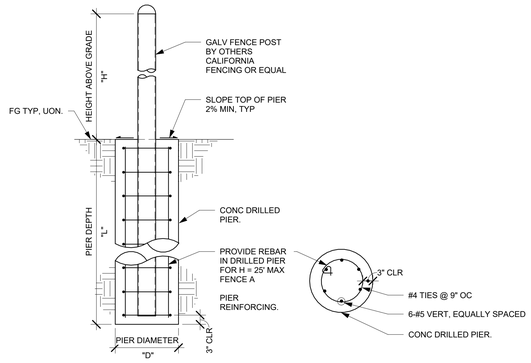

6 FENCE POST FOOTING DETAIL
1 1/2" = 1'-0"

DRILLED PIER SCHEDULE

ITEM	HEIGHT ABOVE GRADE, "H"	PIER DIAMETER "D"	PIER LENGTH "L"
FENCE	12'-0" MAX	1'-6"	7'-0"

NOTE:

1. SEE ARCH. DRAWINGS FOR LOCATION OF FENCE.

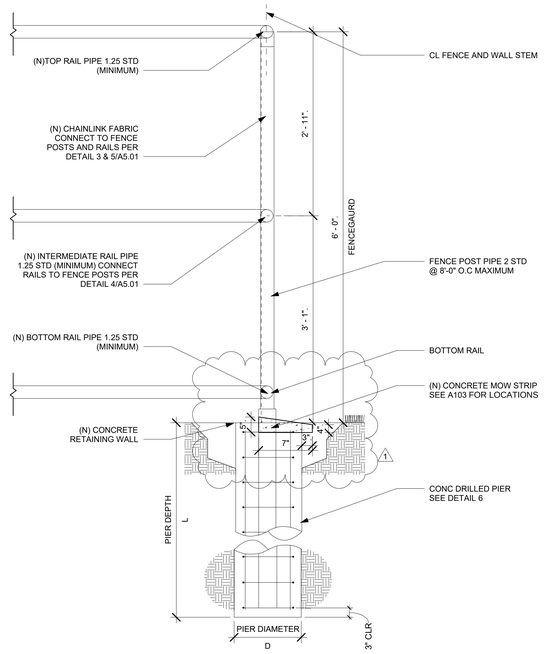

5 DETAIL
1 1/2" = 1'-0"

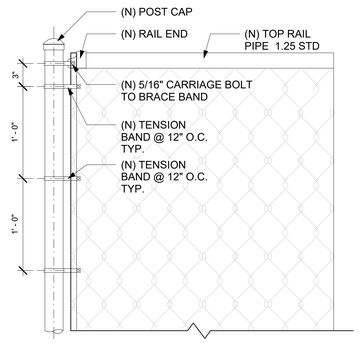

3 END POST DETAIL
1 1/2" = 1'-0"

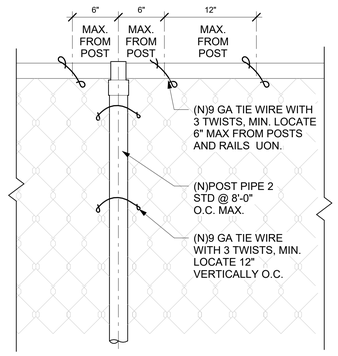

2 TOP RAIL DETAIL
1 1/2" = 1'-0"

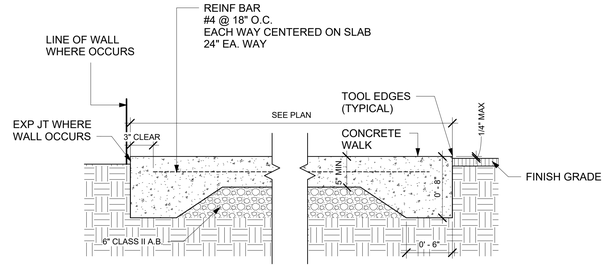

GENERAL NOTES:
1. CONTROL JOINT @ 12'-0" MAX, SEE 7A THIS PAGE
2. EXPANSION JOINT ON SIDEWALK SHALL MATCH WITH JOINTS ON CURB & GUTTER CONTROL JOINT BETWEEN EXPANSION JOINTS SHALL BE 4'-0" O.C., SEE 7B THIS PAGE
3. ALL EDGES SHALL HAVE 1/2" RADIUS.
4. APPLY MEDIUM BROOM FINISH TO SURFACE OF CURB AND GUTTER PARALLEL W/ STREET.
5. SLOPE TOP AND BOTTOM OF SLAB TO DRAIN

8 TYPICAL WALK
1 1/2" = 1'-0"

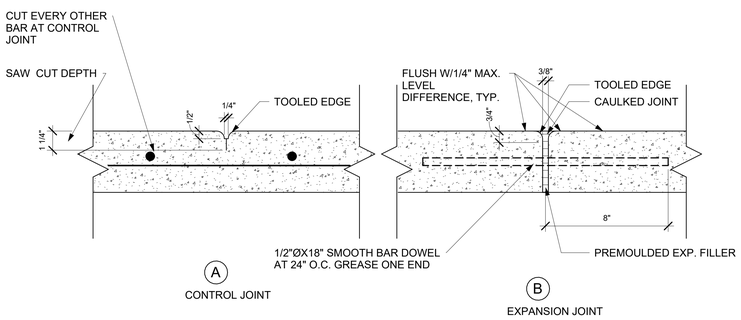

THESE DETAILS APPLY TO EXTERIOR SLAB-ON-GRADE CONDITIONS ONLY.
NOTE: CONTROL JOINTS SHALL BE MADE BY SAW CUTTING THE SLAB WITH A SOFF -CUT SYSTEM OR APPROVED EQUAL AS SOON AS THE SURFACE IS FIRM ENOUGH SO THAT IT WILL NOT BE DAMAGED BY THE BLADE, USUALLY WITHIN 2 TO 4 HOURS AFTER PLACEMENT

7 TYPICAL CONCRETE JOINTS
3" = 1'-0"

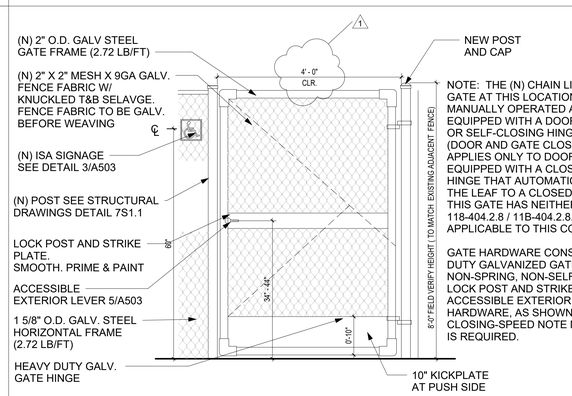

NOTE: THE (N) CHAIN LINK GATE AT THIS LOCATION IS MANUALLY OPERATED AND IS NOT EQUIPPED WITH A DOOR/GATE CLOSER OR SELF-CLOSING HINGE. CBC 11B-404.2.8 (DOOR AND GATE CLOSING SPEED) APPLIES ONLY TO DOORS AND GATES EQUIPPED WITH A CLOSER OR SPRING HINGE THAT AUTOMATICALLY RETURNS THE LEAF TO A CLOSED POSITION; AS THIS GATE HAS NEITHER, SECTION 118-404.2.8 / 11B-404.2.8.1 IS NOT APPLICABLE TO THIS CONDITION.

GATE HARDWARE CONSISTS OF A HEAVY-DUTY GALVANIZED GATE HINGE (MANUAL, NON-SPRING, NON-SELF-CLOSING TYPE), LOCK POST AND STRIKE PLATE, AND ACCESSIBLE EXTERIOR LEVER HARDWARE, AS SHOWN ON THIS CLOSING-SPEED NOTE NO ADJUSTMENT IS REQUIRED.

4 ACCESSIBLE CHAIN LINK GATE
3/4" = 1'-0"

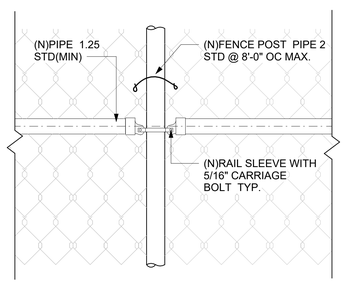

1 INTERMEDIATE CONNECTION
1 1/2" = 1'-0"

LICENSED ARCHITECT
RODOLFO L. CHACON
No. C 28654
Exp. ____
STATE OF CALIFORNIA

REVISION	DESCRIPTION
1	ADDENDUM #001-10.23.2026

FREEDOM HIGH SCHOOL

BASEBALL INFIELD & SOFTBALL OUTFIELD IMPROVEMENTS

1050 Neroly Road
Oakley, CA 94561

CHACON ARCHITECTURE
RODOLFO L.CHACON
EMAIL: rodolfo@chaconarchitecture.com
PHONE: 925-504-8098
ADDRESS : 2106 BOLERO,
BAY POINT, CA. 94565
WWW.CHACONARCHITECTURE.COM

Project Number
Issue Date

KEY MAP

SHEET TITLE
DETAILS

A501

PLOT DATE: 10/23/2026 1:27:17 PM

Autodesk Docs://Freedom HS _New Batting Cages/Freedom High School.rvt

ADVANTEX
10xW SERIES
Weatherized Rim Exit Device

The 10xW Series **weatherized rim exit device** is super-heavy-duty **panic** and **fire exit hardware** for use on all types of single doors and gates and double doors and gates with mullions that are or may be exposed directly to the weather. The patented mounting plate and strike locator system ensures the easiest and most accurate installation of panic hardware available. In addition to listing as UL panic and fire exit hardware device, this device conforms to UL1034-34 Temperature Section 34, UL1034-54 Dust Section 54, MIL-STD 810F, Method 506.4 (driving rain test); and MIL-STD 810F, Method 509.4 (salt fog test).

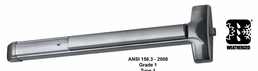

Benefits
- Tough and durable design for years of trouble-free service in high-use, high-abuse or inclement weather environments
- Minimal door prep saves time and money
- Fast and easy installation saves time and money
- Patented mounting plate and strike locator replaces paper templates
- Outside trims are easily changed or re-keyed without removing device from door
- Heavy duty angled end cap deflects damage away from device

Features
- Stainless steel deadlocking, Pullman-type latch bolt
- Assembled using components resistant to temperature, dust, driving rain and salt fog
- Field sizeable
- All exposed surfaces are finished over stainless steel with PVD, an environmentally-friendly finishing process
- Fasteners made of stainless steel 316 material
- Non-handed
- 1/8 turn hex or cylinder dogging

Mechanical Options
- H - Hurricane Rated
- AM - Anti-Microbial Coating
- BP-3 Mounting plate (call factory for retrofit information)
- BP-5 Mounting Plate (call factory for retrofit information)
- CD - Cylinder Dogging
- HD - Hex Dogging (Std.)
- LD - Less Dogging
- EC1 - Heavy duty angled end cap (Std.)
- EC2 - Flush end cap
- 99 - Surface Strike (Std.)
- 98 - Semi Mortise Strike (Call factory)
- 24 - Fits 24" Door Width
- 30 - Fits 36" Door Width
- 36 - Fits 36" Door Width (Std.)
- 48 - Fits 48" Door Width

For full list of available mechanical options, see 10 Series How To Order page

Electrical Options
- Electric Unlock (EU)
- Request to Exit Weatherized (EX W)
- Request to Exit Weatherized for High Voltage (EXV W)

Refer to Electrified Options section for more information

DETEX A Century of Security 1923-2023

8 GATE HARDWARE 1
1 1/2" = 1'-0"

Accessories
- GB1 - Glass Bead Kit
- SN1 - Sex Nut Kit (2 per package)
- SSK - Security Torx Screw Kit
- Trim Functions (see Outside Trims)
- GTPLKIT - Adjustable Gate Plate

Technical Information
- Door Types - Wood, Hollow Metal, Fiberglass or Aluminum
- Door Thickness - Fits standard 1-3/4" - 2-1/4" doors (for other door thicknesses contact factory)
- Minimum Stile - 4-5/8" with standard 99 strike; 4-1/8" with optional 98 strike
- Fasteners - Machine and Self-Drilling Screws standard stainless steel 316 material
- Recommended Plate Size

  Gate - 1/8" thick plate, galvanized, or painted steel or 1/4" thick aluminum plate, minimum height - 10"

  Strike - 1/8" thick plated, galvanized, painted steel plate, angle iron, or 1/4" thick aluminum plate, minimum Height - 5"

  Stop - 1/8 thick plated, galvanized, or painted angle iron or 1/4" thick aluminum angle plate, minimum Height - 2"

Finishes

605 / US3	Polished Brass	612 / US10	Brushed Bronze	630 / US32D	Brushed Stainless Steel
606 / US4	Brushed Brass	613 / US10B	Oil Rubbed Bronze	693 / SPBLK	Black, Painted
611 / US9	Polished Bronze	628 / US28	Aluminum Satin	695 / SP 313	Dark Bronze, Painted
		629 / US32	Polished Stainless Steel		

Single Gate

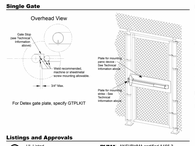

For Detex gate plate, specify GTPLKIT

Dimensions

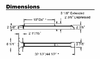

* 18" and 32 1/2" dimension for 36" door

* 24" and 44 1/2"dimension for 48" door

Detex Limited Warranty
10 Year Mechanical3 year Electrical Limited Manufacturer's Warranty

Listings and Approvals
- UL Listed Panic Hardware
- UL1034-34 Temperature Section 34 (Operating Range -31°F (-35°C) to 122°F (+50°C))
- UL1034-54 Dust Section 54
- Meets ADA Requirements
- State of Florida Approval
- ANSI/BHMA certified A156.3
- MIL-STD 810F (GL) Method 509.4 Salt Fog Test
- MIL-STD 810F (GL) Method 506.4 Heavy Rain Test (Grade 4)
- Meets NFPA 80 & 101 for Life Safety
- Texas Department of Insurance

DETEX A Century of Security 1923-2023

Detex Corporation
302 Detex Drive
New Braunfels, Texas 78130-3045 USA
PH. (830) 629-2900
(800) 729-3839
FAX (800) 653-3839
http://www.detex.com
USA Sales:
marketing@detex.com
International Sales:
export@detex.com

For detailed windstorm listings, visit www.detex.com/PROVEN

Cancer & Reproductive Harm - www.detex.com/prop65

October 29, 2024

7 GATE ACCESSORIES 1
1 1/2" = 1'-0"

Weatherized Accessories
Gate Plate & Accessories
The mounting plate adjusts to fit different gate sizes. The adjustable receiving latch makes installation easy. The lockbox makes it possible to gain access from outside the gate by using a key. All accessories are available in silver or black finish.

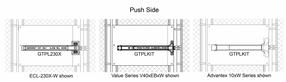

GTPL Adjustable Gate Plate

- Fits Single Gates 32" - 52" wide
- Adjustable to fit wide variety of single gates
- Sleeved together
- Fits square or round gate frames

GTPLGRD Gate Latch Protector

- Provides added security
- For use on existing gate plate application where gap is larger than 1"

GTSTKBKT Strike Latch Receiver Bracket

- Includes stainless steel U-bolt, nuts, tek-screws
- 1/4" steel with powder-coat finish
- Doubles as gate stop
- Accomodates 99 strike for Advantex 10/40 Series and V40 Series

GTPLKIT
For Advantex and Value Series rim exit devices. Provides a fabrication to opening required for EVAS applications.

The kit includes:
GTPL - Adjustable Gate Plate
GTPLGRD - Gate Latch Protector
GTSTKBKT - Strike Latch Receiver Bracket

GTPL230X
For ECL-230X-W applications (further adjustability is required for 230X-W-TB, 230X-W-TD, 230X-W-TB)

The kit includes:
GTPL - Adjustable Gate Plate
GTPLGRD - Gate Latch Protector
GTSTKBKT - Strike Latch Receiver Bracket
104345 - Adapter Plate

DETEX A Century of Security 1923-2023

6 GATE ACCESSORIES
1 1/2" = 1'-0"

ADVANTEX
WIDE STILE
LEVER TRIM DESIGNS

Assorted outside trims provide security for all types of installations. Built to be as durable as the panic devices, these heavy-duty trims will stand up to heavy use and abuse. The versatile design of the trims, combined with the device mounting plate, makes changing functions as simple as replacing the outside trim. This can easily be done without removing the exit device from the door. Wide stile trims can be used on 10 Series Rim and 20 and 21 Series Surface Vertical Rods. Add M to most trims for use with 30 Series Mortise devices. Add V to most trims for use with 70, 71, 80, 81, 82 and 83 Series Concealed Vertical Rod devices. Detex uses the BHMA functions/descriptions for all trims.

All Wide Stile Lever Trims come standard with a break-away type lever to prevent permanent damage from vandalism and abuse. Once the lever is forced past the locking point, the lever will drop down and appear broken. The internal disengaging clutch allows the lever to be reset by pulling it back to its original position. Anti-Microbial Coating (AM) is available on all levers - contact factory for lead time and details.

Standard Lever Trims (S lever standard)

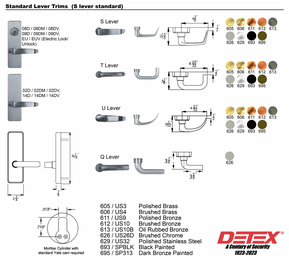

605 / US3	Polished Brass	628 / US28	Aluminum Satin
606 / US4	Brushed Brass	629 / US32	Polished Stainless Steel
611 / US9	Polished Bronze	630 / US32D	Brushed Stainless Steel
612 / US10	Brushed Bronze	693 / SPBLK	Black Painted
613 / US10B	Oil Rubbed Bronze	695 / SP313	Dark Bronze Painted
626 / US26D	Brushed Chrome		

DETEX A Century of Security 1923-2023

5 GATE HARDWARE
1 1/2" = 1'-0"

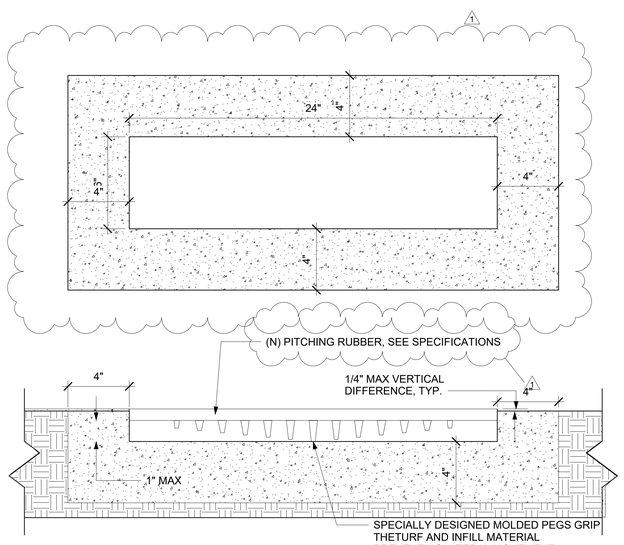

* DURABLE ALL RUBBER MESH REINFORCED CONSTRUCTION

* OFFICIAL SIZE - 6" X 24"

4 PITCHING RUBBER
3" = 1'-0"

PICTOGRAM & BACKGROUND OF CONTRASTING COLORS

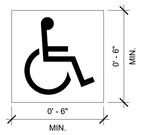

U.N.O. PICTOGRAMS (PICTORIAL SYMBOL SIGNS) SHALL BE ACCOMPANIED BY THE EQUIVALENT WRITTEN DESCRIPTION PLACED DIRECTLY BELOW THE PICTOGRAM. THE BORDER DIMENSION OF THE PICTOGRAM SHALL BE A MINIMUM OF 6" IN HEIGHT

3 ISA SIGN
3" = 1'-0"

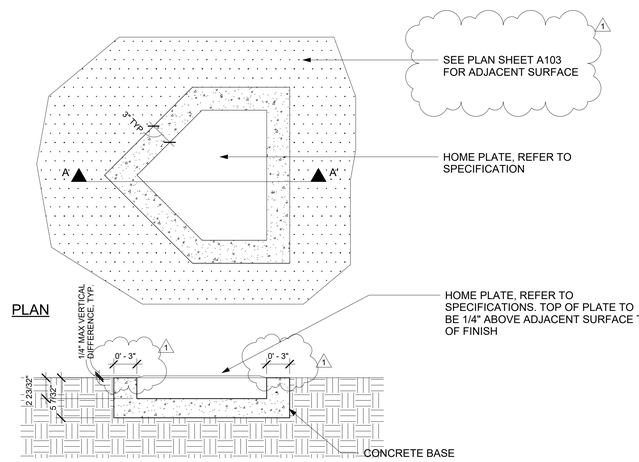

2 SECTION A-A
1 1/2" = 1'-0"

Freedom High School - New Batting Cages (DSA Project)

EQUIPMENT PLAN VIEW (DIAGRAMMATIC) - TriplePlay Plus

Model: TriplePlay Plus | 3-Wheel Baseball Pitching Machine

Diagrammatic / schematic only - not a manufacturer shop drawing. Use for reference only.

Qty this project: (2) units - Batting Cages 1, 2. | Source: https://sportstutorbaseballsoftball.com/triple-play-plus/ [Scale: 3/4" = 1'-0" (do not scale drawing)]

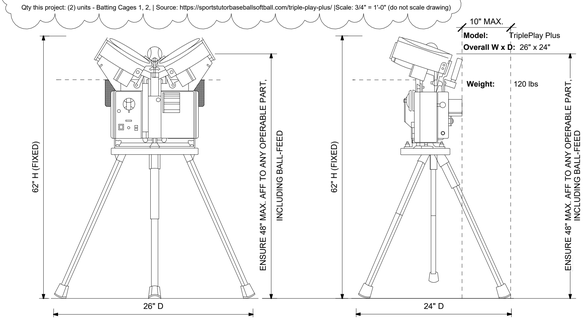

Model: TriplePlay Plus
Overall W x D: 26" x 24"
Weight: 120 lbs

1 PITCHING MACHINE DETAILS
1 1/2" = 1'-0"

Freedom High School - New Batting Cages (DSA Project)

EQUIPMENT PLAN VIEW (DIAGRAMMATIC) - TriplePlay Plus

Model: TriplePlay Plus | 3-Wheel Baseball Pitching Machine

Diagrammatic / schematic only - not a manufacturer shop drawing. Use for reference only.

Qty this project: (2) units - Batting Cages 1, 2. | Source: https://sportstutorbaseballsoftball.com/triple-play-plus/ [Scale: 3/4" = 1'-0" (do not scale drawing)]

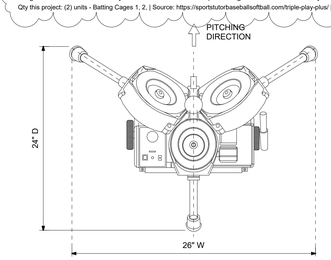

SUMMARY DATA
Model: TriplePlay Plus
Overall W x D: 26" x 24"
Overall Height: 62" (fixed)
Ball Exit Ht: 55"
Weight: 120 lbs
Base Type: Tripod, portable equipmer

REVISION	DESCRIPTION
1	ADDENDUM #001-10.23.2026

LICENSED ARCHITECT RODOLFO L. CHACON No. C 28654 Exp. ____ STATE OF CALIFORNIA

FREEDOM HIGH SCHOOL

BASEBALL INFIELD & SOFTBALL OUTFIELD IMPROVEMENTS

1050 Neroly Road
Oakley, CA 94561

CHACON ARCHITECTURE
RODOLFO L.CHACON
EMAIL: rodolfo@chaconarchitecture.com
PHONE: 925-504-8098
ADDRESS : 2106 BOLERO,
BAY POINT, CA. 94565
WWW.CHACONARCHITECTURE.COM

Project Number
Issue Date

KEY MAP

SHEET TITLE
DETAILS

A503

PLOT DATE: 10/23/2026 2:20:04 PM

ATTACHMENT 2

REVISED FRONT END SPECIFICATIONS
Bidding Documents dated October 23, 2026
LUHSD Bid No. 26-27-04

LIBERTY UNION HIGH SCHOOL DISTRICT

BIDDING DOCUMENTS

FOR

FREEDOM HIGH SCHOOL SOFTBALL

BATTING CAGES PROJECT

FOR THE

LIBERTY UNION HIGH SCHOOL DISTRICT

19 Oak Street
Brentwood, CA 94513
Telephone: (925) 634-2166

OCTOBER 23, 2026

DSA APP. No. 01- 123111

LUHSD Bid No. 26-27-04

THIS PAGE INTENTIONALLY LEFT BLANK FOR PRINTING PURPOSES

NOTICE INVITING BIDS 1

INSTRUCTIONS TO BIDDERS 5

CHECKLIST OF MANDATORY BID FORMS 14

DESIGNATION OF SUBCONTRACTORS 16

DESIGNATION OF SUBCONTRACTORS FORM 17

BID FORM 19

CONTRACTOR'S CERTIFICATE REGARDING WORKERS' COMPENSATION FORM 25

NON-COLLUSION DECLARATION 26

BID GUARANTEE FORM 27

BID BOND FORM 28

REQUEST FOR SUBSTITUTION AT TIME OF BID 31

ACKNOWLEDGMENT OF BIDDING PRACTICES REGARDING INDEMNITY FORM 33

DISABLED VETERAN BUSINESS ENTERPRISE (DVBE) PARTICIPATION STATEMENT 34

CONTRACTOR'S CERTIFICATE REGARDING DRUG-FREE WORKPLACE 35

CONTRACTOR'S CERTIFICATE REGARDING ALCOHOLIC BEVERAGE AND TOBACCOP FREE CAMPUS POLICY 36

IRAN CONTRACTING ACT CERTIFICATION 37

FLEET COMPLIANCE CERTIFICATION 39

AGREEMENT FORM 41

PAYMENT BOND 47

PERFORMANCE BOND 50
GUARANTEE 54

ESCROW AGREEMENT FOR SECURITY DEPOSITS IN LIEU OF RETENTION 55

INSURANCE DOCUMENTS & ENDORSEMENTS 58

DISABLED VETERAN BUSINESS ENTERPRISE (DVBE) CONTRACTOR CLOSE-OUT STATEMENT 59

CONTRACTOR CERTIFICATION REGARDING BACKGROUND CHECKS 60

CONTRACTOR CERTIFICATION REGARDING BACKGROUND CHECKS 61

ARTICLE 1 DEFINITIONS 62

1.1 BASIC DEFINITIONS 62
1.2 EXECUTION, CORRELATION AND INTENT 67
1.3 OWNERSHIP AND USE OF ARCHITECT'S DRAWINGS, SPECIFICATIONS AND OTHER DOCUMENTS 72

ARTICLE 2 DISTRICT 73

2.1 INFORMATION AND SERVICES REQUIRED OF THE DISTRICT 73
2.2 DISTRICT'S RIGHT TO CARRY OUT THE WORK DUE TO PARTIAL DEFAULT IN A SPECIFIC SEGREGATED AREA OF WORK (48 HOUR NOTICE TO CURE AND CORRECT) 76

ARTICLE 3 THE CONTRACTOR 78

3.1 SUPERVISION AND CONSTRUCTION PROCEDURES 78
3.2 SUPERVISION 79
3.3 LABOR AND MATERIALS 80
3.4 WARRANTY 85
3.5 TAXES 85
3.6 PERMITS, FEES AND NOTICES 85
3.7 SUBMITTALS REQUIRED AT THE COMMENCEMENT OF THE PROJECT 87
3.8 DOCUMENTS, SAMPLES, AND COMPUTER AT THE SITE 88
3.9 SUBMITTALS INCLUDING SHOP DRAWINGS, PRODUCT DATA, AND SAMPLES 88
3.10 SUBSTITUTIONS 94
3.11 INTEGRATION OF WORK 96
3.12 CLEANING UP 96
3.13 ACCESS TO WORK 98
3.14 ROYALTIES AND PATENTS 98
3.15 INDEMNIFICATION 99

3.16 SUBMISSION OF DAILY REPORTS 99

3.17 AS-BUILT DRAWINGS AND ANNOTATED SPECIFICATIONS 100
3.18 EQUIPMENT MANUALS 101
3.19 DIR REGISTRATION 101

ARTICLE 4 ADMINISTRATION OF THE CONTRACT AND CLAIMS 102

4.1 ARCHITECT 102
4.2 ARCHITECT'S ADMINISTRATION OF THE CONTRACT 102
4.3 PROJECT INSPECTOR 104
4.4 STOP WORK ORDER 106
4.5 RESPONSIBILITY FOR ADDITIONAL CHARGES INCURRED BY THE DISTRICT FOR PROFESSIONAL SERVICES 106
4.6 DISPUTES AND CLAIMS 107

ARTICLE 5 SUBCONTRACTORS 117

5.1 DEFINITIONS 117

ARTICLE 6 CONSTRUCTION BY DISTRICT OR BY SEPARATE CONTRACTORS 119

6.1 DISTRICT'S RIGHT TO PERFORM CONSTRUCTION AND TO AWARD SEPARATE CONTRACTS 119
6.2 CONSTRUCTIVE OWNERSHIP OF PROJECT SITE AND MATERIAL 121
6.3 DISTRICT'S RIGHT TO CLEAN UP 121

ARTICLE 7 CHANGES IN THE WORK 122

7.1 CHANGES 122
7.2 CHANGE ORDERS ("CO") 123
7.3 CONSTRUCTION CHANGE DOCUMENT (CCD Category A, and CCD Category B) and IMMEDIATE CHANGE DIRECTIVE (ICD) 123
7.4 REQUEST FOR INFORMATION ("RFI") 125
7.5 REQUEST FOR PROPOSAL ("RFP") 125
7.6 CHANGE ORDER REQUEST ("COR") 126
7.7 COST OF CHANGE ORDERS 126
7.8 ALLOWANCES 126

ARTICLE 8 TIME AND SCHEDULE 133

8.1 DEFINITIONS 133
8.2 HOURS OF WORK 135
8.3 PROGRESS AND COMPLETION 135
8.4 EXTENSIONS OF TIME - LIQUIDATED DAMAGES 139

ARTICLE 9 PAYMENTS AND COMPLETION 143

9.1 CONTRACT SUM 143
9.2 COST BREAKDOWN 143

9.3 PROGRESS PAYMENTS 144
9.4 APPLICATIONS FOR PROGRESS PAYMENTS 146

9.5 STOP NOTICE CLAIMS AND WARRANTY OF TITLE 148
9.6 DECISIONS TO WITHHOLD PAYMENT 149
9.7 NONCONFORMING WORK 151
9.8 SUBCONTRACTOR PAYMENTS 151
9.9 COMPLETION OF THE WORK 151
9.10 PARTIAL OCCUPANCY OR USE 156
9.11 COMPLETION AND FINAL PAYMENT 157
9.12 SUBSTITUTION OF SECURITIES 160

ARTICLE 10 PROTECTION OF PERSONS AND PROPERTY 161

10.1 SAFETY PRECAUTIONS AND PROGRAMS 161
10.2 SAFETY OF PERSONS AND PROPERTY 163
10.3 EMERGENCIES 166
10.4 HAZARDOUS MATERIALS 166
10.5 SITE SAFETY PLAN 171

ARTICLE 11 INSURANCE AND BONDS 168

11.1 CONTRACTOR'S LIABILITY INSURANCE 168
11.2 WORKERS' COMPENSATION INSURANCE 168
11.3 BUILDER'S RISK/ "ALL RISK" INSURANCE 168
11.4 FIRE INSURANCE 168
11.5 AUTOMOBILE LIABILITY 168
11.6 OTHER INSURANCE 168
11.7 PROOF OF INSURANCE 168
11.8 COMPLIANCE 168
11.9 WAIVER OF SUBROGATION 168
11.10 PERFORMANCE AND PAYMENT BONDS 169

ARTICLE 12 UNCOVERING AND CORRECTION OF WORK 170

12.1 COMPLIANCE WITH TITLE 24 INSTALLATION REQUIREMENTS 170
12.2 SPECIAL NOTICE OF AMERICAN'S WITH DISABILITIES ACT 170
12.3 UNCOVERING OF WORK 171
12.4 CORRECTION OF WORK 171

ARTICLE 13 MISCELLANEOUS PROVISIONS 173

13.1 GOVERNING LAW 173
13.2 SUCCESSORS AND ASSIGNS 173
13.3 WRITTEN NOTICE 173
13.4 RIGHTS AND REMEDIES 173
13.5 TESTS AND INSPECTIONS 173
13.6 TRENCH EXCAVATION 174
13.7 WAGE RATES, TRAVEL, AND SUBSISTENCE 175

13.8 RECORDS OF WAGES PAID 177
13.9 APPRENTICES 179
13.10 ASSIGNMENT OF ANTITRUST CLAIMS 180
13.11 STATE AND DISTRICT CONDUCTED AUDITS 181
13.12 STORM WATER POLLUTION PREVENTION 182

ARTICLE 14 TERMINATION OR SUSPENSION OF THE CONTRACT 187

14.1 TERMINATION BY THE CONTRACTOR FOR CAUSE 187
14.2 TERMINATION BY THE DISTRICT FOR CAUSE 187
14.3 TERMINATION OF CONTRACT BY DISTRICT (CONTRACTOR NOT AT FAULT) 189
14.4 REMEDIES OTHER THAN TERMINATION 189

ARTICLE 15 DEBARMENT 191

15.1 DEBARMENT MEANS THERE HAS BEEN A FINDING THAT THE CONTRACTOR IS NOT RESPONSIBLE 191
15.2 BOARD FINDING 191
15.3 HEARING AND PRESENTATION OF EVIDENCE 191

EXHIBIT A: Owner Controlled Insurance Program (OCIP)

EXHIBIT B: OCIP Project Insurance Manual

EXHIBIT C: Milestone Schedule

EXHIBIT D: Logistics Plan

NOTICE INVITING BIDS

LIBERTY UNION HIGH SCHOOL DISTRICT

NOTICE IS HEREBY GIVEN that the Liberty Union High School District, acting by and through its Governing Board, will receive, prior to **Thursday, November 5, 2026 at 2:00 PM.**, sealed bids for the award of a contract for the Liberty Union High School District's **Freedom High School Softball Batting Cages Project.** Bid documents are available on the Liberty Union High School District website at www.luhsd.net. Quality Bidders also has bid documents available at www.qualitybidders.com .

All interested bidders must attend a mandatory Pre-Bid conference at Freedom High School, 1050 Neroly Road, Oakley, CA 94561 (meet at the Front Entry to the Performing Arts Center, off of Brown Road), at 3:30 PM on Thursday, October 29, 2026.

DSA App. No. 01-123111

PROJECT: **Freedom High School Softball Batting Cages Project**

All bids shall be made and presented only on the forms presented by the District. Bids shall be received in the Maintenance and Operations Office of the District located at 19 Oak Street, Brentwood, California 94513, and all Bids shall be opened and publicly read aloud at the above stated time and place. The District's time clock shall govern and control the time for all bids to be received by the District and no other clock shall be used to determine the time when bids shall be received by the District in accordance with this Notice Inviting Bids. Any bids received after the time specified above or after any extensions due to material changes shall be returned unopened.

The Contract Time is **9 Weeks** (refer to Exhibit C: Milestone Schedule)

CONTRACTOR should consult the General Conditions, Supplementary Conditions, and General Requirements regarding Milestones and Liquidated Damages.

PREQUALIFICATION OF PRIME CONTRACTORS IS REQUIRED FOR THIS PROJECT. ALL BIDDERS MUST HAVE RECEIVED PRIOR PREQUALIFICATION APPROVAL FROM THE DISTRICT IN ORDER TO SUBMIT A BID FOR THIS PROJECT.

The engineer's approximate estimate for this project is $500,000.00.

Scope of work:
This Project includes new batting cages and bullpens adjacent to the existing softball field for Liberty Union High School District on their Freedom High School Campus in Oakley, California.

The scope of work includes new concrete flatwork, new fencing & gates, new batting cages and new lighting and power.

Each bidder shall be a licensed contractor pursuant to the California Business and Professions Code, and be licensed to perform the work called for in the Contract Documents. The successful bidder must possess a valid and active ***Class "A" and/or Class "B"*** License at the time of bid and throughout the duration of this Contract. The Contractor's California State License number shall be clearly stated on the bidder's proposal.

Subcontractors shall be licensed pursuant to California law for the trades necessary to perform the Work called for in the Contract Documents.

Each bid must strictly conform with and be responsive to the Contract Documents as defined in the General Conditions.

The District reserves the right to reject any or all bids or to waive any irregularities or informalities in any bids or in the bidding.

Each bidder shall submit with its bid — on the form furnished with the Contract Documents — a list of the designated subcontractors on this Project as required by the Subletting and Subcontracting Fair Practices Act, California Public Contract Code section 4100 et seq.

In accordance with California Public Contract Code section 22300, the District will permit the substitution of securities for any moneys withheld by the District to ensure performance under the Contract. At the request and expense of the Contractor, securities equivalent to the amount withheld shall be deposited with the District, or with a state or federally chartered bank as the escrow agent, who shall then pay such moneys to the Contractor. Upon satisfactory completion of the Contract, the securities shall be returned to the Contractor.

Each bidder's bid must be accompanied by one of the following forms of bidder's security: (1) cash; (2) a cashier's check made payable to the District; (3) a certified check made payable to the District; or (4) a bidder's bond executed by a California admitted surety as defined in Code of Civil Procedure section 995.120, made payable to the District in the form set forth in the Contract Documents. Such bidder's security must be in an amount not less than ten percent (10%) of the maximum amount of bid as a guarantee that the bidder will enter into the proposed Contract, if the same is awarded to such bidder, and will provide the required Performance and Payment Bonds, insurance certificates and any other required documents. In the event of failure to enter into said Contract or provide the necessary documents, said security will be forfeited.

The Contractor and all subcontractors shall comply with the requirements set forth in Division 2, Part 7, Chapter 1 of the Labor Code. The District has obtained from the Director of the Department of Industrial Relations the general prevailing rate of per diem wages and the general prevailing rate for holiday and overtime work in the locality in which this work is to be performed for each craft, classification or type of worker needed to execute the Contract. These per diem rates, including holiday and overtime work, as well as employer payments for health and welfare, pension, vacation, and similar purposes, are on file at the District, and are also available from the Director of the Department of Industrial Relations. Pursuant to California Labor Code section 1720 et seq., it shall be mandatory upon the Contractor to whom the Contract is awarded, and upon any subcontractor under such Contractor, to pay not less than the said specified rates to all workers employed by them in the execution of the Contract.

A contractor or subcontractor shall not be qualified to bid on, be listed in a bid proposal, subject to the requirements of Section 4104 of the Public Contract Code, or engage in the performance of any contract for public work, as defined in the Labor Code, unless currently registered and qualified to perform public work pursuant to Labor Code section 1725.5. It is not a violation of this section for an unregistered

contractor to submit a bid that is authorized by Section 7029.1 of the Business and Professions Code or by Section 10164 or 20103.5 of the Public Contract Code, provided the contractor is registered to perform public work pursuant to Section 1725.5 at the time the contract is awarded.

All payroll records as detailed in Labor Code §1776 of the Contractor and all Subcontractors shall be certified and furnished directly to the Labor Commissioner in accordance with Labor Code §1771.4(a)(3) once every thirty (30) days while Work is being performed on the Project and within thirty (30) days after the final day of Work performed on the Project (or more frequently if required by the District or the Labor Commissioner). The Contractor and all Subcontractors shall submit their own payroll records to the Labor Commissioner on the internet website of the Department of Industrial Relations and such payroll records shall be in an electronic format prescribed by the Labor Commissioner. Monitoring and enforcement of the prevailing wage laws and related requirements will be performed by the Labor Commissioner/ Department of Labor Standards Enforcement (DLSE).

Each Bidder shall comply with all In-Use Off-Road Diesel-Fueled Fleets Regulations (the "Fleets Regulation") implemented by the California Air Resources Board ("CARB") which apply broadly to all self-propelled off-road diesel vehicles 25 horsepower or greater and other forms of equipment used in California. Bidders are required to comply with all CARB orders and Fleets Regulation requirements, including, without limitation, all applicable sections of the Fleets Regulation, as codified in Title 13 of the California Code of Regulations section 2449 et seq. throughout the duration of the Project. Bidders must provide, with their Bid, copies of the Bidder's and all listed subcontractors' most recent and valid Certificate(s) of Reported Compliance ("CRC") issued by the CARB. Any Bidder's failure to provide valid CRCs as required herein may render such Bidder's Bid non-responsive. Additionally, any Bidder's failure to complete and submit the enclosed Fleet Compliance Certification form with its Bid, may render such Bid non-responsive.

No bidder may withdraw any bid for a period of ninety (90) calendar days after the date set for the opening of bids.

Separate payment and performance bonds, each in an amount equal to 100% of the total Contract amount, are required, and shall be provided to the District prior to execution of the Contract and shall be in the form set forth in the Contract Documents.

All bonds (Bid, Performance, and Payment) must be issued by a California admitted surety as defined in California Code of Civil Procedure section 995.120.

Where applicable, bidders must meet the requirements set forth in Public Contract Code section 10115 et seq., Military and Veterans Code section 999 et seq. and California Code of Regulations, Title 2, Section 1896.60 et seq. regarding Disabled Veteran Business Enterprise ("DVBE") Programs. Forms are included in this Bid Package.

Any request for substitutions pursuant to Public Contract Code section 3400 must be made at the time of Bid on the Substitution Request Form set forth in the Contract Documents and included with the bid.

No telephone or facsimile machine will be available to bidders on the District premises at any time.

It is each bidder's sole responsibility to ensure its bid is timely delivered and received at the location designated as specified above. Any bid received at the designated location after the scheduled closing time for receipt of bids shall be returned to the bidder unopened.

_____

LIBERTY UNION HIGH SCHOOL DISTRICT

INSTRUCTIONS TO BIDDERS

1. Preparation of Bid Form. Proposals under these specifications shall be submitted on the blank forms furnished herewith at the time and place stated in the Notice Inviting Bids. The District's time clock shall govern and control the time for all bids to be received by the District and no other clock shall be used to determine the time when bids shall be received by the District in accordance with the Notice Inviting Bids. All blanks in the bid form must be appropriately filled in, and all proposed prices must be stated clearly and legibly in both words and numerals. All bids must be signed by the bidder in permanent black or blue ink and submitted to the District in accordance with the Notice Inviting Bids. The District reserves the right to reject any Bid if all of the above information is not furnished. It is each Bidder's sole responsibility to ensure its Bid is timely submitted and received by the District in accordance with the Notice Inviting Bids. Any bid received by the District after the scheduled closing time for the receipt of Bids shall be returned to the Bidder unopened.

2. Bid Security. Each bid must be accompanied by one of the following forms of bidder's security: (1) cash; (2) a cashier's check made payable to the District; (3) a certified check made payable to the District; or (4) a bidder's bond executed by a California admitted surety as defined in Code of Civil Procedure section 995.120, made payable to the District, in the form set forth in the Contract Documents. Such bidder's security must be in an amount not less than ten percent (10%) of the maximum amount of such bidder's bid as a guarantee that the bidder will enter into the Contract, if the same is awarded to such bidder, and will provide the required Performance and Payment Bonds, insurance certificates and any other required documents. In the event that a bidder is awarded the Contract and such bidder fails to enter into said Contract or provide the surety bond or bonds within five (5) calendar days after award of the Contract to bidder, said security will be forfeited.

3. Signature. The bid form, all bonds, all designations of subcontractors, the Contractor's Certificate, the Agreement, and all Guarantees must be signed in permanent blue ink in the name of the bidder and must bear the signature in longhand of the person or persons duly authorized to sign the bid.

If bidder is a corporation, the legal name of the corporation shall first be set forth, together with two signatures: one from the President and one from the Secretary or Assistant Secretary. Alternatively, the signature of other authorized officers or agents may be affixed, if a certified copy of the resolution of the corporate board of directors authorizing them to do so is provided to the District. Such documents shall include the title of such signatories below the signature and shall bear the corporate seal.

If bidder is a partnership, the true name of the firm shall first be set forth, together with the names of all persons comprising the partnership or co-partnership. The bid must be signed by all partners comprising the partnership unless proof in the form of a certified copy of a statement of partnership acknowledging the signer to be a general partner is presented to the District, in which case the general partner may sign.

Bids submitted as joint ventures must so state and be signed by each joint venturer.

Bids submitted by individuals must be signed by the bidder unless an up to date power- of-attorney is on file in the District office, in which case, said person may sign for the individual.

The above rules also apply in the case of the use of a fictitious firm name. In addition, however, where a fictitious name is used, it must be so indicated in the signature.

4. Modifications. Changes in or additions to the bid form, recapitulations of the work bid upon, alternative proposals, or any other modification of the bid form which is not specifically called for in the Contract Documents may result in the District's rejection of the bid as not being responsive to the Notice Inviting Bids. **No oral or telephonic modification of any bid submitted will be considered**.

5. Erasures, Inconsistent or Illegible Bids. The bid submitted must not contain any erasures, interlineations, or other corrections unless each such correction creates no inconsistency and is suitably authenticated by affixing in the margin immediately opposite the correction the signature or signatures of the person or persons signing the bid. In the event of inconsistency between words and figures in the bid price, words shall control figures. In the event that the District determines that any bid is unintelligible, inconsistent, or ambiguous, the District may reject such bid as not being responsive to the Notice Inviting Bids.

6. Examination of Site and Contract Documents. Each bidder shall visit the site of the proposed work and become fully acquainted with the conditions relating to the construction and labor so that the facilities, difficulties, and restrictions attending the execution of the work under the Contract are fully understood. Bidders shall thoroughly examine and be familiar with the drawings and specifications and all others documents and requirements that are attached to and/or contained in the Project Manual or other documents issued to bidders. The failure or omission of any bidder to receive or examine any Contract Documents, form, instrument, addendum, or other document or to visit the site and become acquainted with conditions there existing shall not relieve any bidder from obligations with respect to the bid or to the contract. The submission of a bid shall be taken as prima facie evidence of compliance with this Section. Bidders shall not, at any time after submission of the bid, dispute, complain, or assert that there were any misunderstandings with regard to the nature or amount of work to be done.

7. Withdrawal of Bids. Any bid may be withdrawn, either personally or by written request, at any time prior to the scheduled closing time for receipt of bids. The bid security for bids withdrawn prior to the scheduled closing time for receipt of bids, in accordance with this paragraph, shall be returned upon demand therefor.

No bidder may withdraw any bid for a period of ninety (90) calendar days after the date set for the opening of bids.

8. Agreements, Insurance and Bonds. The Agreement form which the successful bidder, as Contractor, will be required to execute, and the forms and amounts of surety bonds and insurance endorsements which Contractor will be required to be furnished at the time of execution of the Agreement, are included in the Bid Documents and should be carefully examined by the bidder. The number of executed copies of the Agreement, the Performance Bond, and the Payment Bond required is three (3). Payment and Performance bonds must be executed by an admitted surety insurer as defined in Code of Civil Procedure 995.120. Additionally, the Contractor must provide to the District with its executed Agreement: (i) a complete and accurate copy of the Contractor's Workplace Violence Prevention Plan in accordance with Labor Code Section 6401.9 that is applicable to the Project (the "Project WVPP"); and (ii) the name, position, and telephone number of each person having responsibility for implementing the Project WVPP and receiving reports of workplace violence, if and to the extent that information is not conspicuously specified in the Project WVPP.

9. Interpretation of Plans and Documents/Pre-Bid Clarification. If any prospective bidder is in doubt as to the true meaning of any part of the Contract Documents, or finds discrepancies in, or omissions, a written request for an interpretation or correction thereof may be submitted to the District. The bidder submitting the request shall be responsible for its prompt delivery. **Any interpretation or correction of**

the Contract Documents will only be made by Addendum duly issued, and a copy of such Addendum will be made available for each contractor receiving a set of the Contract Documents. No person is authorized to make any oral interpretation of any provision in the Contract Documents, nor shall any oral interpretation be binding on the District. If discrepancies on drawings, specifications or elsewhere in the Contract Documents are not covered by addenda, bidder shall include in their bid methods of construction and materials for the higher quality and complete assembly. Each request for clarification shall be submitted to the District in writing, via email, to only the following person(s)

TO: Rodolfo Chacon, Architect, rodolfo@chaconarchitecture.com

CC: Paul Melloni, Director of Facilities, mellonip@luhsd.net
AND
Austin Gray, Construction Manager, Austin.Gray@lathropconstruction.com

Each transmitted request shall contain the name of the person and/or firm filing the request, address, telephone and fax number, Specifications and/or Drawing number. Bidder is responsible for the legibility of any and all requests. Pre-bid clarification requests shall be filed a minimum of **six (6)** days prior to the bid opening. Requests received less than **six (6)** days before the bid opening shall not be considered or responded to by the District. The District will issue a written response to all timely pre-bid clarification requests that materially affect a bidder's price through a Addendum duly issued by the District not less than seventy-two (72) hours prior to the bid opening.

10. Bidders Interested in More Than One Bid. No person, firm, or corporation shall be allowed to make, or file, or be interested in more than one prime bid for the same work unless alternate bids are specifically called for. A person, firm, or corporation that has submitted a proposal to a bidder, or that has quoted prices of materials to a bidder, is not thereby disqualified from submitting a proposal or quoting prices to other bidders or making a prime proposal.

11. Award of Contract. The Contract will be awarded to the lowest responsive responsible bidder by action of the governing Board. The District reserves the right to reject any or all bids, or to waive any irregularities or informalities in any bids or in the bidding process. In the event an award is made to bidder, and such bidder fails or refuses to execute the Contract and provide the required documents detailed in Section 8 above within five (5) calendar days after award of the Contract to bidder, the District may award the Contract to the next lowest responsible and responsive bidder or release all bidders**. Each bid must conform and be responsive to the Contract Documents as defined in the General Conditions**.

12. Bid Protest Procedure. Any bidder may file a bid protest. The protest shall be filed in writing with the District's Director of Facilities not more than five (5) business days after the date of the bid opening. An e-mail address shall be provided and by filing the protest, protesting bidder consents to receipt of e-mail notices for purposes of the protest and protest related questions and protest appeal, if applicable. The protest shall specify the reasons and facts upon which the protest is based.

a. Resolution of Bid Controversy: Once the bid protest is received, the apparent lowest responsible bidder will be notified of the protest and the evidence presented. If appropriate, the apparent low bidder will be given an opportunity to rebut the evidence and present evidence that the apparent low bidder should be allowed to perform the Work. If deemed appropriate by the District, an informal hearing will be held. District will issue a written decision within fifteen (15) calendar days of receipt of the protest, unless factors beyond the District's reasonable control prevent such resolution. The decision on the bid protest will be copied to all parties involved in the protest.

b. Appeal: If the protesting bidder or the apparent low bidder is not satisfied with the decision, the matter may be appealed to the Chief Business Official or their designee, within three (3) business days after receipt of the District's written decision on the bid protest. The appeal must be in writing and sent via overnight registered mail with all accompanying information relied upon for the appeal and an e-mail address from which questions and responses may be provided to:

Liberty Union High School District
Business Department
20 Oak Street
Brentwood, CA 94513

c. Appeal Review: The Chief Business Official or their designee shall review the decision on the bid protest from the Director of Facilities and issue a written response to the appeal, or if appropriate, appoint a Hearing Office to conduct a hearing and issue a written decision. The written decision of the Chief Business Official or the Hearing Officer shall be rendered within fifteen (15) calendar days and shall state the basis for the decision. The decision concerning the appeal will be final and not subject to any further appeals.

d. Reservation of Rights to Proceed with Project Pending Appeal. The District reserves the right to proceed to award the Project and commence construction pending an Appeal. If there is State Funding or a critical completion deadline, the District may choose to shorten the time limits set forth in this Section if written notice is provided to the protesting party. E-mailed notice with a written confirmation sent by First Class Mail shall be sufficient to constitute written notice. If there is no written response to a written notice shortening time, the District may proceed with the award.

e. Finality. Failure to comply with this Bid Protest Procedure shall constitute a waiver of the right to protest and shall constitute a failure to exhaust the protesting bidder's administrative remedies.

13. Alternates. If alternate bids are called for, the Contract may be awarded at the election of the Governing Board to the lowest responsible and responsive bidder using the method and procedures outlined in the Notice Inviting Bids and as specified in the section entitled Alternate/Deductive Bid Alternates.

a. Subcontractor Listing for Alternates. If alternate bids are called for and the bidder intends to use different or additional subcontractors, a separate list of subcontractors must be submitted for each such alternate.

14. Evidence of Responsibility. Upon the request of the District, a bidder whose bid is under consideration for the award of the Contract shall submit promptly to the District satisfactory evidence showing the bidder's financial resources, surety and insurance claims experience, construction experience, completion ability, workload, organization available for the performance of the Contract, and other factors pertinent to a Project of the scope and complexity involved.

15. Listing Subcontractors. Each bidder shall submit with his bid, on the form furnished with the Contract Documents, a list of the names, license numbers, scopes of work, locations of the places of business, contact information, and Department of Industrial Relations ("DIR") registration numbers of each subcontractor who will perform work or labor or render service to the bidder in or about the project, or a subcontractor who under subcontract to the bidder, specially fabricates and installs a portion of the work, in an amount in excess of one-half of 1 percent of the bidder's total bid as required by the Subletting and Subcontracting Fair Practices Act (Public Contract Code section 4100, et seq.) Pursuant to Labor Code section 1725.5, all subcontractors (of any tier) performing work on this Project must be properly registered with DIR.

16. Workers' Compensation. In accordance with the provisions of Labor Code section 3700, the successful bidder as the Contractor shall secure payment of compensation to all employees. The Contractor shall sign and file with the District the following certificate prior to performing the work under this contract: "I am aware of the provisions of Section 3700 of the Labor Code, which requires every employer to be insured against liability for workers' compensation or to undertake self-insurance in accordance with the provisions of that code, and I will comply with such provisions before commencing the performance of the work of this contract." The form of such certificate is included as a part of the Bid Documents.

17. Contractor's License. To perform the work required by this notice, the Contractor must possess the Contractor's License as specified in the Notice Inviting Bids, and the Contractor must maintain the license throughout the duration of the contract. If, at the time of bid, bidder is not licensed to perform the Project in accordance with Division 3, Chapter 9, of the Business and Professions Code for the State of California and the Notice to Contractors calling for bids, such bid will not be considered and the Contractor will forfeit its bid security to the District.

18. Anti-Discrimination. It is the policy of the District that in connection with all work performed under contracts, there be no discrimination against any prospective or active employee engaged in the work because of race, color, ancestry, national origin, religious creed, sex, age, or marital status. The Contractor agrees to comply with applicable federal and California laws, including, but not limited to, the California Fair Employment and Housing Act, beginning with Government Code section 12900 and Labor Code section 1735. In addition, the Contractor agrees to require like compliance by any subcontractors employed on the work by such Contractor.

19. Preference for Materials and Substitutions.

a. One Product Specified. Unless the Plans and Specifications state that no Substitution is permitted, whenever the Contract Documents indicate any specific article, device, equipment, product, material, fixture, patented process, form, method, construction, or any specific name, make, trade name, or catalog number, with or without the words, "or equal," such specification shall be read as if the language "or equal" is incorporated.

b. Request for Substitution. Bidder may, unless otherwise stated, offer any material, process, article, etc., which is materially equal or better in every respect to that so indicated or specified ("Specified Item") and will completely accomplish the purpose of the Contract Document. If bidder desires to offer a Substitution for a Specified Item, such bidder must make a request in writing on the District's Substitution Request Form ("Request Form") and submit the completed Request Form with the bidder's bid. The Request Form must be accompanied by evidence as to whether the proposed substitution:

1) Is equal in quality, service, and ability to the Specified Item as demonstrated by a side by side comparison of key characteristics and performance criteria (CSI comparison chart);
2) Will entail no changes in detail, construction and scheduling of related work;
3) Will be acceptable in consideration of the required design and artistic effect;
4) Will provide no cost disadvantage to the District;
5) Will require no excessive or more expensive maintenance, including adequacy and availability of replacement parts; and
6) Will require no change in the Contract Time.

In completing the Request Form, bidder must state with respect to each requested substitution whether bidder will agree to provide the Specified Item in the event that the District denies bidder's request for substitution of a Specified Item. In the event that bidder does not agree in the Request

Form to provide the Specified Item and the District denies the requested Substitution, the bidder's bid shall be considered non-responsive and the District may award the Contract to the next lowest bidder or in its sole discretion, release all bidders. In the event that bidder has agreed in the Request Form to provide the Specified Item and the District denies bidder's requested substitution for a Specified Item, bidder shall execute the Agreement and provide the Specified Item without any additional cost or charge to the District, and if bidder fails to execute the Agreement with the Specified Item(s), bidder's bid bond will be forfeited.

After the bids are opened, the apparent lowest bidder shall provide, within five (5) calendar days of opening such bids, any and all Drawings, Specifications, samples, performance data, calculations, and other information as may be required to assist the Architect and the District in determining whether the proposed substitution is acceptable. The burden of establishing these facts shall be upon the bidder.

After the District's receipt of such evidence by bidder, the District will make its final decision as to whether the bidder's request for Substitution for any Specified Items will be granted. The District shall have sole discretion in deciding as to whether a proposed request for Substitution is equal to or better than a Specified Item. Any request for Substitution which is granted by the District shall be documented and processed through a Change Order. The District may condition its approval of any Substitution upon delivery to the District of an extended warranty or other assurances of adequate performance of the Substitution. Any and all risks of delay due to DSA, or any other governmental agency having jurisdiction shall be on the bidder.

20. Disqualification of Bidders and Proposals. More than one proposal for the same work from any individual, firm, partnership, corporation, or association under the same or different names will not be accepted; and reasonable grounds for believing that any bidder is interested in more than one proposal for the work will be cause for rejecting all proposals in which such bidder is interested and the bidder will forfeit their bid security to the District.

21. Unbalanced or Altered Bids. Proposals in which the prices are obviously unbalanced, and those which are incomplete or show any alteration of form, or contain any additions or conditional or alternate bids that are not called for or otherwise permitted, may be rejected. A proposal on which the signature of the bidder has been omitted may be rejected. If, in the District's sole discretion, it determines any pricing, costs or other information submitted by a bidder may result in an unbalanced bid, the District may deem such bid non-responsive. A bid may be determined by the District to be unbalanced if the bid is based on prices significantly less than cost for some work and prices which are significantly overstated in relation to cost for other work, and if there is a reasonable doubt that the bid will result in the lowest overall cost to the District even though it may be the low evaluated bid, or if it is so unbalanced as to be tantamount to allowing an advanced payment.

22. Employment of Apprentices. The Contractor and all Subcontractors shall comply with the provisions of California Labor Code including, but not limited to sections 1777.5, 1777.6, and 1777.7 concerning the employment of apprentices. The Contractor and any Subcontractor under him shall comply with the requirements of said sections, including applicable portions of all subsequent amendments in the employment of apprentices; however, the Contractor shall have full responsibility for compliance with said Labor Code sections, for all apprenticeable occupations, regardless of any other contractual or employment relationships alleged to exist.

23. Non-Collusion Declaration. Public Contract Code section 7106 requires bidders to submit declaration of non-collusion with their bids. This form is included with the bid documents and must be signed and dated by the bidder under penalty of perjury.

24. Wage Rates, Travel and Subsistence.

a. The Contractor and all subcontractors shall comply with the requirements set forth in Division 2, Part 7, Chapter 1 of the Labor Code. Pursuant to Labor Code section 1770 et seq., the District has obtained from the Director of the Department of Industrial Relations the general prevailing rate of per diem wages and the general prevailing rate for holiday and overtime work in the locality in which this work is to be performed for each craft, classification or type of worker needed to execute the contract. Copies are available from the District to any interested party on request and are also available from the Director of the Department of Industrial Relations. The Contractor shall obtain copies of the above-referenced prevailing wage sheets and post a copy of such wage rates at appropriate, conspicuous, weatherproof points at the Site.

b. Any worker employed to perform work on the Project and such work is not covered by any classification listed in the published general prevailing wage rate determinations or per diem wages determined by the Director of the Department of Industrial Relations, shall be paid not less than the minimum rate of wages specified therein for the classification which most nearly corresponds to the employment of such person in such classification.

c. Holiday and overtime work, when permitted by law, shall be paid for at the rate set forth in the prevailing wage rate determinations issued by the Director of the Department of Industrial Relations or at least one and one-half (1½) times the specified basic rate of per diem wages, plus employer payments, unless otherwise specified in the Contract Documents or authorized by law.

d. These per diem rates, including holiday and overtime work, and employer payments for health and welfare, pension, vacation, and similar purposes, are on file at the administrative office of the District, located as noted above and are also available from the Director of the Department of Industrial Relations. It is the Contractor's responsibility to ensure the appropriate prevailing rates of per diem wages are paid for each classification. It shall be mandatory upon the Contractor to whom the Contract is awarded, and upon any subcontractor under such Contractor, to pay not less than the said specified rates to all workers employed by them in the execution of the Contract.

25. DIR Registration of Contractor and Subcontractors. A contractor or subcontractor shall not be qualified to bid on, be listed in a bid proposal, subject to the requirements of Section 4104 of the Public Contract Code, or engage in the performance of any contract for public work, as defined in the Labor Code, unless currently registered and qualified to perform public work pursuant to Section 1725.5. It is not a violation of this section for an unregistered contractor to submit a bid that is authorized by Section 7029.1 of the Business and Professions Code or by Section 10164 or 20103.5 of the Public Contract Code, provided the contractor is registered to perform public work pursuant to Section 1725.5 at the time the contract is awarded.

This Project is a public works project as defined in Labor Code section 1720. Each contractor bidding on this Project and all subcontractors (of any tier) performing any portion of the Work must comply with the Labor Code sections 1725.5 and 1771.1 and must be properly and currently registered with DIR and qualified to perform public works pursuant to Labor Code section 1725.5 throughout the duration of the Project. For more information and up to date requirements, contractors are recommended to periodically review the DIR's website at www.dir.ca.gov. Contractor shall be solely responsible for ensuring compliance with Labor Code section 1725.5 as well as any requirements implemented by DIR applicable to its services or its subcontractors throughout the term of the Agreement and in no event shall contractor be granted increased payment from the District or any time extensions to complete the Project as a result of contractor's efforts to maintain compliance with the Labor Code or any requirements implemented by the DIR. Failure to comply with these requirements shall be deemed a material breach of this Agreement

and grounds for termination for cause. The contractor and all subcontractors shall furnish certified payroll records as required pursuant Labor Code section 1776 directly to the Labor Commissioner in accordance with Labor Code section 1771.4(a)(3) once every thirty (30) days while Work is being performed on the Project and within thirty (30) days after the final day of Work performed on the Project (or more frequently if required by the District or the Labor Commissioner). The Contractor and all Subcontractors shall submit their own payroll records to the Labor Commissioner on the internet website of the Department of Industrial Relations and such payroll records shall be in an electronic format and manner prescribed by the Labor Commissioner. The District reserves the right to withhold contract payments if the District is notified, or determines as the result of its own investigation, that contractor is in violation of any of the requirements set forth in Labor Code section 1720 et seq. at no penalty or cost to the District. Monitoring and enforcement of the prevailing wage laws and related requirements will be performed by the Labor Commissioner/ Department of Labor Standards Enforcement (DLSE).

26. No Telephone or Facsimile Availability. No telephone or facsimile machine will be available to bidders on the District premises at any time.

27. Obtaining Bidding Documents. Bidding Documents, may be obtained from:

Bid documents are available on the Liberty Union High School District website at www.luhsd.net. Quality Bidders also has bid documents available at www.qualitybidders.com .

Bidder shall utilize a complete set of Bidding Documents in preparing a bid. The failure or omission of bidder to receive any Bidding Document, form, instrument, Addendum, or other document shall not relieve bidder from any obligations with respect to the bid and/or Contract.

28. Addenda. The District reserves the right to revise the Contract Documents prior to the Bid Opening date. Clarifications, revisions or any other notice of a change in the Contract Documents will be issued only by the District and only in the form of a written Addendum. Each prospective Bidder shall provide the District a name, address, email address, and facsimile number to which Addenda may be sent, as well as a telephone number by which the District can contact the Bidder. Copies of Addenda will be furnished by fax, mail, e-mail, or other proper means of delivery to all who are known by the issuing office to have received a complete set of the Contract Documents and provided such current information. Any other purported Addenda are void and unenforceable.

Bidder is responsible for receiving and ascertaining the disposition of all Addenda issued regardless of District notification and to acknowledge all Addenda in the submitted sealed bid prior to the Bid Opening. Copies of Addenda will be made available for inspection wherever Bidding Documents are on file for inspection. Each Addendum will be numbered, dated, and identified with the Project number. Oral statements or any instructions in any form, other than Addendum as described above, shall be void and unenforceable. Any Addendum duly issued by the District and not noted as being acknowledged by Bidder as required in the Bid Form, may result in the Bid being deemed non-responsive.

29. Debarment. Bidder may also be subject to debarment, in addition to seeking remedies for False Claims under Government Code section 12650 et seq. and Penal Code section 72, the District may debar a Contractor pursuant to Article 15 of the General Conditions if the Board, or the Board may designate a hearing officer who, in his or her discretion, finds the Contractor has done any of the following:

a. Intentionally or with reckless disregard, violated any term of a contract with the District

b. Committed an act or omission which reflects on the Contractor's quality, fitness or capacity to perform work for the District;

c. Committed an act or offense which indicates a lack of business integrity or business honesty; or,

d. Made or submitted a false claim against the District or any other public entity (See Government Code section 12650, et seq., and Penal Code section 72).

30. Iran Contracting Act Certification Form. Each bidder shall submit a completed Iran Contracting Act Certification Form to the District with its Bid. Failure to (1) submit a fully executed Iran Contracting Act Certification Form to the District prior to the Bid Opening, or (2) complete any required portion of the Iran Contracting Act Certification Form may result in the bidder/Contractor being deemed non-responsive by the District.

31. Fleet Compliance Certification Form. The District is a Public Works Awarding Body, as defined under Title 13 California Code of Regulations section 2449(c)(46). Accordingly, all Bidders must submit, with their Bids, valid Certificate(s) of Reported Compliance ("CRC") for the Bidder's fleet and for the fleet(s) of its listed subcontractors (including any applicable leased equipment or vehicles). Each Bidder must also complete and submit to the District, with its Bid, the enclosed Fleet Compliance Certification form for the Project. **FAILURE TO PROVIDE ALL APPLICABLE CRC'S TO THE DISTRICT FOR THE BIDDER, AND FOR ALL LISTED SUBCONTRACTORS, MAY RENDER A BID NON-RESPONSIVE. ADDITIONALLY, FAILURE TO COMPLETE AND SUBMIT THE ENCLOSED FLEET COMPLIANCE CERTIFICATION FORM, MAY RENDER A BID NON-RESPONSIVE.**

32. Mandatory Pre-Bid Job Conference. There will be a mandatory Pre-Bid Job Conference at the date, time and place stated in the Notice Inviting Bids. Any Contractor bidding on the Project who fails to attend the entire mandatory job walk and conference will be deemed a non-responsive bidder and will have its bid returned unopened.

33. Prequalification of Bidders. As a condition of submitting a bid for this Project, and in accordance with California Public Contract Code section 20111.6, prospective bidders are required to submit to the District a completed set of prequalification documents on Quality Bidders. These documents will be the basis for determining which bidders are qualified to bid on this Project.

Bids will not be accepted if a contractor has not been prequalified where prequalification is required. Prequalification instructions and/or documents are available through Quality Bidders' website at https://www.qualitybidders.com. Prequalification documents must be submitted by each contractor no later than ten (10) business days prior to the bid opening date. Contractors will be notified by Quality Bidders of their prequalification rating within a reasonable period of time after submission of their prequalification documents, but not less than five (5) business days prior to the bid opening date.

If this Project includes work that will be performed by mechanical, electrical or plumbing ("MEP") subcontractors (contractors that hold C-4, C-7, C-10, C-16, C-20, C-34, C-36, C-38, C-42, C-43 or C-46 licenses), such MEP subcontractors must also be prequalified. A list of prequalified MEP subcontractors will be made available by the District to all bidders at least five business days prior to the bid opening date. It is the responsibility of the bidder to ensure that all MEP subcontractors holding any of the licenses listed above are properly prequalified before submitting a bid. This prequalification requirement applies even if the subcontractor will perform, or is designated to perform, work that does not require one of the licenses listed above, but the subcontractor holds one of the licenses listed above.

CHECKLIST OF MANDATORY BID FORMS

(For Contractor's use and reference only. Additional documents may be required so bidders should carefully review all Contract Documents and Bid Documents)

- ❑ Designation of Subcontractors
- ❑ Bid Form
- ❑ Contractor's Certificate Regarding Workers Compensation (form must be provided with bid documents even though an OCIP is in-place)
- ❑ Non-Collusion Declaration
- ❑ Bid Bond (or Bid Guarantee form if Security is other than Bid Bond)
- ❑ Substitution Request Form (If Substitution Request Form is not submitted then NO Substitutions will be allowed after the bids are opened)
- ❑ Acknowledgment of Bidding Practices Regarding Indemnity
- ❑ DVBE Participation Statement
- ❑ Contractor's Certificate Regarding Drug-Free Work Place
- ❑ Contractor's Certificate Regarding Alcoholic Beverage and Tobacco-Free Campus Policy
- ❑ Iran Contracting Act Certification Form
- ❑ Fleet Compliance Certification Form and All Applicable Certificates of Reported Compliance

PRE-BID CLARIFICATION FORM (For Contractor's Use)

PROJECT NAME:	Freedom HS – Softball Batting Cages Project		
PROJECT NUMBER:	LUHSD 26-27-04		
TO:	Paul Melloni & Rodolfo Chacon	EMAIL:	mellonip@luhsd.net & rodolfo@chaconarchitecture.com

DATE:			
FROM:		EMAIL:	
DOCUMENT/DIVISION NUMBER:		DRAWING NUMBER:	

REQUESTED CLARIFICATION:
RESPONSE TO CLARIFICATION:

Attach additional numbered sheets as necessary; however, only one (1) request shall be contained on each submitted form.

DESIGNATION OF SUBCONTRACTORS

In compliance with the Subletting and Subcontracting Fair Practices Act (California Public Contract Code section 4100 et seq.,) and any amendments thereof, each Bidder shall set forth below: (a) the name, license number, and location of the place of business of each subcontractor who will perform work or labor or render service to the Contractor, who will perform work or labor or work or improvement to be performed under this Contract, or a subcontractor licensed by the State of California who, under subcontract to the Contractor, specially fabricates and installs a portion of the work or improvements according to detailed Drawings contained in the Plans and Specifications in an amount in excess of one-half of one percent of the Contractor's total bid; and (b) the portion and description of the work which will be done by each subcontractor under this Act. The Contractor shall list only one subcontractor for each such portion as is defined by the Contractor in this bid. All subcontractors shall be properly licensed by the California State Licensing Board.

If a Contractor fails to specify a subcontractor, or if a Contractor specifies more than one subcontractor for the same portion of work to be performed under the Contract in excess of one-half of one percent of the Contractor's total bid, the Contractor shall be deemed to have agreed that the Contractor is fully qualified to perform that portion, and that the Contractor alone shall perform that portion.

No Contractor whose bid is accepted shall (a) substitute any subcontractor, (b) permit any subcontractor to be voluntarily assigned or transferred or allow the relevant portion of the work to be performed by anyone other than the original subcontractor listed in the original bid, or (c) sublet or subcontract any portion of the work in excess of one-half of one percent of the Contractor's total bid where the original bid did not designate a subcontractor, except as authorized in the Subletting and Subcontracting Fair Practices Act.

Subletting or subcontracting of any portion of the work in excess of one-half of one percent of the Contractor's total bid where no subcontractor was designated in the original bid shall only be permitted in cases of public emergency or necessity, and then only after a finding, reduced to writing as a public record, of the authority awarding this Contract setting forth the facts constituting the emergency or necessity.

All subcontractors (of any tier) performing any portion of the Work must comply with the Labor Code sections 1725.5 and 1771.1 and must be properly and currently registered with the California Department of Industrial Relations and qualified to perform public works pursuant to Labor Code section 1725.5 throughout the duration of the Project.

NOTE: If alternate bids are called for and bidder intends to use different or additional subcontractors on the alternates, a separate list of subcontractors must be provided for each such Alternate.

DESIGNATION OF SUBCONTRACTORS FORM

Scope of Work	Name of Subcontractor	Location & Place of Business	License Type and Number	DIR Registration Number	*E-Mail & Telephone**

Scope of Work	Name of Subcontractor	Location & Place of Business	License Type and Number	DIR Registration Number	*E-Mail & Telephone**

* This information must be provided at the time of submission of bid or must be provided within 24 hours after the time set for the opening of bids. Bidders who choose to provide this information within 24 hours after the time set for the opening of bids are solely responsible to ensure the District receives this information in a timely manner. The District is not responsible for any problems or delays associated with emails, faxes, delivery, etc. Absent a verified fax or email receipt date and time by the District, the District's determination of whether the information was received timely shall govern and be determinative. Bidder shall not revise or amend any other information in this form submitted at the time of bid. The information submitted at the time of bid shall govern over any conflicts, discrepancies, ambiguities or other differences in any subsequent Subcontractor Designation Forms submitted by the bidder.

Proper Name of Bidder: _____

Date: _____

Name: _____

Signature of Bidder Representative: _____

Address: _____

Phone: _____

_____

BID FORM

FOR

SOFTBALL BATTING CAGES PROJECT

AT

FREEDOM HIGH SCHOOL

1050 NEROLY ROAD

OAKLEY, CA 94561

DSA App. No. **01-123111**
Bid No. **26-27-04**

FOR

LIBERTY UNION HIGH SCHOOL DISTRICT

CONTRACTOR NAME: _____

ADDRESS: _____

_____

TELEPHONE: ( ) _____

FAX: ( ) _____

EMAIL _____

TO: Liberty Union High School District, acting by and through its Governing Board, herein called "District".

1. Pursuant to and in compliance with your Notice Inviting Bids and other documents relating thereto, the undersigned bidder, having thoroughly studied and familiarized himself with the terms of the Contract, the local conditions affecting the performance of the Contract, the cost of the work at the place where the work is to be done, the labor market, the supply chain market for materials and equipment necessary to complete the Project, with the Drawings and Specifications, and other Contract Documents, hereby proposes and agrees to perform within the time stipulated, the Contract, including all of its component parts, and everything required to be performed, including its acceptance by the District, and to provide and furnish any and all labor, materials, tools, expendable equipment, and utility and transportation services necessary to perform the Contract and complete all of the Work in a workmanlike manner required in connection with the construction of:

BID NO. 26-27-04

Freedom High School Softball Batting Cages Project

in the District described above, all in strict conformance with the drawings and other Contract Documents on file at the Maintenance & Operations Office of said District for amounts set forth herein.

2. BIDDER ACKNOWLEDGES THE FOLLOWING ADDENDUMS/BID CLARIFICATIONS:

Number	Number	Number	Number	Number	Number	Number	Number
_____	_____	_____	_____	_____	_____	_____	_____

Acknowledge the inclusion of all addenda/bid clarifications issued prior to bid in the blanks provided above. Your failure to do so may render your bid non-responsive.

3. TOTAL BASE BID PRICE IN WORDS & NUMBERS:

_____ DOLLARS

($ _____)

4. ALLOWANCES: The following amounts shall be added to the Base Bid.

Allowance No. 1 – Unforeseen Conditions

Forty-Five Thousand DOLLARS

($45,000.00)

5. TOTAL CASH PRICE IN WORDS & NUMBERS (Total Base Bid Price + Allowance No. 1)

_____ DOLLARS

($ _____)

6. TIME FOR COMPLETION: The District may give a notice to proceed within ninety (90) days of the award of the bid by the District. Once the Contractor has received the notice to proceed, the Contractor shall complete the work in the time specified in the Agreement. By submitting this bid, Contractor has thoroughly studied this Project, the labor market, and the supply chain market for materials and equipment that are necessary to complete the Project and Contractor agrees that the Contract Time for this Project is adequate for the timely and proper completion of the Project. Further, Contractor has included in the analysis of the time required for this Project, Rain Days, Governmental Delays, and the requisite time to complete Punch List.

In the event that the District desires to postpone giving the notice to proceed beyond this ninety (90) day period, it is expressly understood that with reasonable notice to the Contractor, giving the notice to proceed may be postponed by the District. It is further expressly understood by the Contractor, that the Contractor shall not be entitled to any claim of additional compensation as a result of the postponement of giving the notice to proceed.

If the Contractor believes that a postponement will cause a hardship to it, the Contractor may terminate the contract with written notice to the District within ten (10) days after receipt by the Contractor of the District's notice of postponement. Should the Contractor terminate the Contract as a result of a notice of postponement, the District shall have the authority to award the Contract to the next lowest responsible bidder, if applicable.

It is understood that the District reserves the right to reject any or all bids and/or waive any irregularities or informalities in this bid or in the bid process. The Contractor understands that it may not withdraw this bid for a period of ninety (90) days after the date set for the opening of bids.

7. Attached is bid security in the amount of not less than ten percent (10%) of the bid:

Bid bond (10% of the Bid), certified check, or cashier's check (circle one)

8. The required List of Designated Subcontractors is attached hereto.

9. The required Non-Collusion Declaration is attached hereto.

10. The Substitution Request Form, if applicable, is attached hereto.

11. It is understood and agreed that if written notice of the acceptance of this bid is mailed, telegraphed, or delivered to the undersigned after the opening of the bid, and within the time this bid is required to remain open, or at any time thereafter before this bid is withdrawn, the undersigned will execute and deliver to the District a Contract in the form attached hereto in accordance with the bid as accepted, and that he or she will also furnish and deliver to the District the Performance Bond and Payment Bond, all within five (5) calendar days after award of Contract, and that the work under the Contract shall be commenced by the undersigned bidder, if awarded the Contract, by the start date provided in the District's Notice to Proceed, and shall be completed by the Contractor in the time specified in the Contract Documents.

12. The names of all persons interested in the foregoing proposal as principals are as follows:

_____

_____

_____

_____

_____

_____

(IMPORTANT NOTICE: If bidder or other interested person is a corporation, state the legal name of such corporation, as well as the names of the president, secretary, treasurer, and manager thereof; if a co-partnership, state the true names of the firm, as well as the names of all individual co-partners comprising the firm; if bidder or other interested person is an individual, state the first and last names in full.)

13. PROTEST PROCEDURES. If there is a bid protest, the grounds shall be submitted as set forth in the Instructions to Bidders.

14. The undersigned bidder shall be licensed and shall provide the following California Contractor's license information:

License Number: _____

License Expiration Date: _____

Name on License: _____

Class of License: _____

DIR Registration Number: _____

If the bidder is a joint venture, each member of the joint venture must include the above information.

15. Time is of the essence regarding this Contract, therefore, in the event the bidder to whom the Contract is awarded fails or refuses to post the required bonds and return executed copies of the Agreement form within five (5) calendar days from the date of receiving the Notice of Award, the District may declare the bidder's bid deposit or bond forfeited as damages.

16. The bidder declares that he/she has carefully examined the location of the proposed Project, that he/she has examined the Contract Documents, including the Plans, General Conditions, Supplemental Conditions, Addenda, and Specifications, all others documents and requirements that are attached to and/or contained in the Project Manual, all other documents issued to bidders and read the accompanying instructions to bidders, and hereby proposes and agrees, if this proposal is accepted, to furnish all materials and do all work required to complete the said work in accordance with the Contract Documents, in the time and manner therein prescribed for the unit cost and lump sum amounts set forth in this Bid Form. The undersigned bidder hereby acknowledges and agrees that such bidder shall not be entitled to any price increase to the Total Cash Purchase Price set forth above on account of or due to any external factors including, but not limited to, inflation, labor shortages, and/or supply chain issues/shortages.

17. DEBARMENT. In addition to seeking remedies for False Claims under Government Code section 12650 et seq. and Penal Code section 72, the District may debar a Contractor pursuant to Article 15 of the

General Conditions if the Board, or the Board may designate a hearing officer who, in his or her discretion, finds the Contractor has done any of the following:

a. Intentionally or with reckless disregard, violated any term of a contract with the District;

b. Committed an act or omission which reflects on the Contractor's quality, fitness or capacity to perform work for the District;

c. Committed an act or offense which indicates a lack of business integrity or business honesty; or

d. Made or submitted a false claim against the District or any other public entity. (See Government Code section 12650, et seq., and Penal Code section 72)

18. DESIGNATION OF SUBCONTRACTORS. In compliance with the Subletting and Subcontracting Fair Practices Act (California Public Contract Code section 4100 et seq.) and any amendments thereof, each bidder shall list subcontractors on the District's form Subcontractor list. This subcontractor list shall be submitted with the bid and is a required form

I agree to receive service of notices at the e-mail address listed below.

I the below-indicated bidder, declare under penalty of perjury that the information provided and representations made in this bid are true and correct.

_____
Proper Name of Company

_____
Name of Bidder Representative

_____
Street Address

_____
City, State, and Zip

( ) _____
Phone Number

( ) _____
Fax Number

_____
E-Mail

By: _____ Date:_____
Signature of Bidder Representative

NOTE: If bidder is a corporation, the legal name of the corporation shall be set forth above together with the signature of authorized officers or agents and the document shall bear the corporate seal; if bidder is a partnership, the true name of the firm shall be set forth above, together with the signature of the partner or partners authorized to sign contracts on behalf of the partnership; and if bidder is an individual, his signature shall be placed above.

All signatures must be made in permanent blue ink.

CONTRACTOR'S CERTIFICATE REGARDING WORKERS' COMPENSATION FORM

(form must be provided with bid documents even though an OCIP is in-place)

Labor Code section 3700 in relevant part provides:

Every employer except the State shall secure the payment of compensation in one or more of the following ways:

1. By being insured against liability to pay compensation by one or more insurers duly authorized to write compensation insurance in this State.

2. By securing from the Director of Industrial Relations a certificate of consent to self-insure, which may be given upon furnishing proof satisfactory to the Director of Industrial Relations of ability to self-insure and to pay any compensation that may become due to employees.

3. For any county, city, city and county, municipal corporation, public district, public agency, or any political subdivision of the state, including each member of a pooling arrangement under a joint exercise of powers agreement (but not the state itself), by securing from the Director of Industrial Relations a certificate of consent to self-insure against workers' compensation claims, which certificate may be given upon furnishing proof satisfactory to the director of ability to administer workers' compensation claims properly, and to pay workers' compensation claims that may become due to its employees. On or before March 31, 1979, a political subdivision of the state which, on December 31, 1978, was uninsured for its liability to pay compensation, shall file a properly completed and executed application for a certificate of consent to self-insure against workers' compensation claims. The certificate shall be issued and be subject to the provisions of Section 3702.

I am aware of the provisions of Labor Code section 3700 which require every employer to be insured against liability for workers' compensation or to undertake self-insurance in accordance with the provisions of that code, and I will comply with such provision before commencing the performance of the work of this Contract.

_____
(Signature)

_____
(Print)

_____
(Date)

In accordance with Article 5 (commencing at section 1860), Chapter 1, Part 7, Division 2 of the Labor Code, the above certificate must be signed and submitted with the Contractor's bid.

NON-COLLUSION DECLARATION

The undersigned declares:

I am the _____[Title] of _____[Name of Company], the party making the foregoing bid.

The bid is not made in the interest of, or on behalf of, any undisclosed person, partnership, company, association, organization, or corporation. The bid is genuine and not collusive or sham. The bidder has not directly or indirectly induced or solicited any other bidder to put in a false or sham bid. The bidder has not directly or indirectly colluded, conspired, connived, or agreed with any bidder or anyone else to put in a sham bid, or to refrain from bidding. The bidder has not in any manner, directly or indirectly, sought by agreement, communication, or conference with anyone to fix the bid price of the bidder or any other bidder, or to fix any overhead, profit, or cost element of the bid price, or of that of any other bidder. All statements contained in the bid are true. The bidder has not, directly or indirectly, submitted his or her bid price or any breakdown thereof, or the contents thereof, or divulged information or data relative thereto, to any corporation, partnership, company, association, organization, bid depository, or to any member or agent thereof, to effectuate a collusive or sham bid, and has not paid, and will not pay, any person or entity for such purpose.

Any person executing this declaration on behalf of a bidder that is a corporation, partnership, joint venture, limited liability company, limited liability partnership, or any other entity, hereby represents that he or she has full power to execute, and does execute, this declaration on behalf of the bidder.

I declare under penalty of perjury under the laws of the State of California that the foregoing is true and correct and that this declaration is executed on _____ [Date], at _____[City], _____[State].

Signed: _____

Typed Name: _____

BID GUARANTEE FORM

(Use only when not using a Bid Bond)

Accompanying this proposal is a cashier's check payable to the order of the Liberty Union High School District or a certified check payable to the order of the Liberty Union High School District in an amount equal to ten percent (10%) of the base bid and alternates ($_____).

The proceeds of this check shall become the property of said District, if, this proposal shall be accepted by the District through the District's Governing Board, and the undersigned fails to execute a Contract with and furnish the sureties required by the District within the required time; otherwise, said check is to be returned to the undersigned.

_____

Bidder

Note: Use this form, in lieu of Bid Bond form, when a cashier's check or certified check is accompanying the bid

BID BOND FORM

KNOW ALL MEN BY THESE PRESENT that we, the undersigned, (hereafter called "Principal"), and _____(hereafter called "Surety"), are hereby held and firmly bound unto the Liberty Union High School District (hereafter called "District") in the sum of _____($_____) for the payment of which, well and truly to be made, we hereby jointly and severally bind ourselves, successors, and assigns.

SIGNED this _____day of _____, 20___.

The condition of the above obligation is such that whereas the Principal has submitted to the District a certain Bid, attached hereto and hereby made a part hereof, to enter into a Contract in writing for the construction of _____.

NOW, THEREFORE,

a. If said Bid is rejected, or

b. If said Bid is accepted and the Principal executes and delivers a Contract or the attached Agreement form within five (5) calendar days after acceptance (properly completed in accordance with said Bid), and furnishes bonds for his faithful performance of said Contract and for payment of all persons performing labor or furnishing materials in connection therewith,

Then this obligation shall be void; otherwise, the same shall remain in force and effect.

Surety, for value received, hereby stipulates and agrees that no change, extension of time, alteration, or addition to the terms of the Contract, or the call for bids, or the work to be performed thereunder, or the specifications accompanying the same, shall in anyway affect its obligation under this bond, and it does hereby waive notice of any such change, extension of time, alteration, or addition to the terms of said Contract, or the call for bids, or the work, or to the specifications.

In the event suit is brought upon this bond by the District and judgment is recovered, the Surety shall pay all costs incurred by the District in such suit, including without limitation, attorneys' fees to be fixed by the court.

IN WITNESS WHEREOF, Principal and Surety have hereunto set their hands and seals, and such of them as are corporations have caused their corporate seals to be hereto affixed and these presents to be signed by their proper officers, on the day and year first set forth above.

By _____

(Corporate Seal)

Principal's Signature

_____

Typed or Printed Name

_____

Principal's Title

By _____

(Corporate Seal)

Surety's Signature

_____

Typed or Printed Name

_____

Title

_____

(Attached Attorney in Fact Certificate)

Surety's Name

_____

Surety's Address

_____

Surety's Phone Number

IMPORTANT:

Surety companies executing bonds must possess a certificate of authority from the California Insurance Commissioner authorizing them to write surety insurance defined in California Insurance Code section 105, and if the work or project is financed, in whole or in part, with federal, grant, or loan funds, it must also appear on the Treasury Department's most current list (Circular 570 as amended).

THIS IS A REQUIRED FORM.

Any claims under this bond may be addressed to:

(Name and Address of Surety)

_____

_____

_____

(Name and Address of agent or representative for
service of process in California if different from above)

_____

_____

_____

(Telephone Number of Surety and agent or
representative for service of process in California).

_____

_____

_____

REQUEST FOR SUBSTITUTION AT TIME OF BID

Pursuant to Public Contract Code section 3400, bidder submits the following request to Substitute with the bid that is submitted. I understand that if the request to substitute is not an "or equal" or is not accepted by District and I answer "no" I will not provide the specified item, then I will be held non-responsive and my bid will be rejected. With this understanding, I hereby request Substitution of the following articles, devices, equipment, products, materials, fixtures, patented processes, forms, methods, or types of construction:

	Specification Section	Specified Item	Requested Substituted Item	Contractor Agrees to Provide Specified Item if request to Substitute is Denied[1] (circle one)	District Decision (circle one)
1.				Yes No	Grant Deny
2.				Yes No	Grant Deny
3.				Yes No	Grant Deny
4.				Yes No	Grant Deny
5.				Yes No	Grant Deny
6.				Yes No	Grant Deny
7.				Yes No	Grant Deny
8.				Yes No	Grant Deny
9.				Yes No	Grant Deny
10.				Yes No	Grant Deny
11.				Yes No	Grant Deny
12.				Yes No	Grant Deny

This Request Form must be accompanied by evidence as to whether the proposed Substitution (1) is equal in quality, service, and ability to the Specified Item; (2) will entail no change in detail, construction, and scheduling of related work; (3) will be acceptable in consideration of the required design and artistic

[1] Bidder must state whether bidder will provide the Specified Item in the event the Substitution request is evaluate and denied. If bidder states that bidder will not provide the Specified Item the denial of a request to Substitute shall result in the rejection of the bidder as non-responsive. However, if bidder states that bidder will provide the Specified Item in the event that bidder's request for Substitution is denied, bidder shall execute the Agreement and provide the Specified Item(s). If bidder refuses to execute the Agreement due to the District's decision to require the Specified Item(s) at no additional cost, bidder's Bid Bond shall be forfeited.

effect; (4) will provide no cost disadvantage to the District; (5) will require no excessive or more expensive maintenance, including adequacy and availability of replacement parts; (6) will require no change of the construction schedule or milestones for the Project; and, (7) Contractor agrees to pay for any DSA Fees or other Governmental Plan check costs associated with this Substitution Request. (See General Conditions Section 3.6)

The undersigned states that the following paragraphs are correct:

1. The proposed Substitution does not affect the dimensions shown on the Drawings.

2. The undersigned will pay for changes to the building design, including Architect, engineering, or other consultant design, detailing, DSA plan check or other governmental plan check costs, and construction costs caused by the requested substitution.

3. The proposed substitution will have no adverse effect on other trades, the Contract Time, or specified warranty requirements.

4. Maintenance and service parts will be available locally for the proposed substitution.

5. In order for the Architect to properly review the substitution request, within five (5) days following the opening of bids, the Contractor shall provide samples, test criteria, manufacturer information, and any other documents requested by Architect or Architect's engineers or consultants, including the submissions that would ordinarily be required under Article 3.7 for Shop Drawings along with a document which provides a side by side comparison of key characteristics and performance criteria (often known as a CSI side by side comparison chart).

6. If Substitution Request is accepted by the District, Contractor is still required to provide a Submittal for the substituted item pursuant to Article 3.7 and shall provide required Schedule information (including schedule fragnets, if applicable) for the substituted item as required under Article 8.3.2.1. The approval of the Architect, Engineer, or District of the substitution request does not mean that the Contractor is relieved of Contractor's responsibilities for Submittals, Shop Drawings, and schedules under Article 3.7 and 8.3.2 if the Contractor is awarded the Project.

Name of Bidder: _____

By:_____

District: _____

By: _____

ACKNOWLEDGMENT OF BIDDING PRACTICES REGARDING INDEMNITY FORM

TO: Liberty Union High School District

RE: LUHSD Bid No. 26-27-04

Freedom High School Softball
Batting Cages Project

Construction Contract for:

Please be advised that with respect to the above-referenced Project the undersigned Contractor on behalf of itself and all subcontractors hereby waives the benefits and protection of Labor Code section 3864, which provides:

> "If an action as provided in this chapter is prosecuted by the employee, the employer, or both jointly against the third person results in judgment against such third person, the employer shall have no liability to reimburse or hold such third person harmless on such judgment or settlement in the absence of a written agreement to do so executed prior to the injury."

This Agreement has been signed by an authorized representative of the contracting party and shall be binding upon its successors and assignees. The undersigned further agrees to promptly notify the District of any changes of ownership of the contracting party or any subcontractor while this Agreement is in force.

_____
Contracting Party

_____
Name of Agent/Title

DISABLED VETERAN BUSINESS ENTERPRISE (DVBE) PARTICIPATION STATEMENT

Each bidder must complete this form in order to comply with the Liberty Union High School District ("District") policy for participation of disabled veteran business enterprises (School District projects funded in whole or in part by the State of California pursuant to the Leroy F. Greene School Facilities Act of 1998. (Education Code §17070.10, *et seq*.)

Project Name: Freedom High School Softball Batting Cages Project

Bid No.: 26-27-04

DSA No.: 01-123111

The undersigned, on behalf of the Contractor named below, certifies that the Contractor has made reasonable efforts to secure participation by DVBE in the Contract to be awarded for the above-referenced Bid No., including participation by DVBE subcontractors and/or material suppliers. **Check only one of the following**:

- ❑ The Contractor was unable after reasonable efforts to secure DVBE participation in the Contract for the above-referenced Project/Bid No. However, the Contractor will use DVBE services if the opportunity arises at any time during construction of the Project. Upon completion of the Project, the Contractor will report to the District the total dollar amount of DVBE participation in any Contract awarded to Contractor, and in any change orders, for the above-referenced Project.

- ❑ The Contractor has secured DVBE participation in the Contract for the above referenced Project/Bid No., and anticipates that such DVBE participation will equal approximately _____dollars ($_____), which represents approximately _____percent (__%) of the total Contract for such Project. Upon completion of the Project, Contractor will report to the District the actual total dollar amount of DVBE participation in the Contract awarded to Contractor, and in any change orders, for such Project

Company: _____

Name: _____

Title: _____

Signature: _____

Date: _____

CONTRACTOR'S CERTIFICATE REGARDING DRUG-FREE WORKPLACE

This Drug-Free Workplace Certification form is required from all successful bidders pursuant to the requirements mandated by Government Code section 8350 et seq., the Drug-Free Workplace Act of 1990. The Drug-Free Workplace Act of 1990 requires that every person or organization awarded a contract or grant for the procurement of any property or service from any State agency must certify that it will provide a drug-free workplace by performing certain specified acts. In addition, the Act provides that each contract or grant awarded by a State agency may be subject to suspension of payments or termination of the contract or grant, and the Contractor or grantee may be subject to debarment from future contracting, if the contracting agency determines that specified acts have occurred.

Pursuant to Government Code section 8355, every person or organization awarded a contract or grant from a State agency shall certify that it will provide a drug-free workplace by doing all of the following:

1. Publishing a statement, notifying employees that the unlawful manufacture, distribution, dispensation, possession, or use of a controlled substance is prohibited in the person's or organization's workplace, and specifying actions which will be taken against employees for violations of the prohibition.

2. Establishing a drug-free awareness program to inform employees about all of the following:

   a. The dangers of drug abuse in the workplace;
   b. The person's or organization's policy of maintaining a drug-free workplace;
   c. The availability of drug counseling, rehabilitation and employee-assistance programs; and
   d. The penalties that may be imposed upon employees for drug abuse violations;

3. Requiring that each employee engaged in the performance of the contract or grant be given a copy of the statement required by subdivision (a) and that, as a condition of employment on the contract or grant, the employee agrees to abide by the terms of the statement.

I, the undersigned, agree to fulfill the terms and requirements of Government Code section 8355 listed above and will (a) publish a statement notifying employees concerning the prohibition of controlled substance at the workplace, (b) establish a drug-free awareness program, and (c) require each employee engaged in the performance of the contact be given a copy of the statement required by section 8355(a) and require such employee agree to abide by the terms of that statement.

I also understand that if the Liberty Union High School District determines that I have either (a) made a false certification herein, or (b) violated this certification by failing to carry out the requirements of Section 8355, that the contract awarded herein is subject to termination, suspension of payments, or both. I further understand that, should I violate the terms of the Drug-Free Workplace Act of 1990, I may be subject to debarment in accordance with the requirements of Section 8350 et seq.

I acknowledge that I am aware of the provisions of Government Code section 8350 et seq. and hereby certify that I will adhere to the requirements of the Drug-Free Workplace Act of 1990.

DATE:_____ _____
CONTRACTOR

By:_____
Signature

CONTRACTOR'S CERTIFICATE REGARDING ALCOHOLIC BEVERAGE AND TOBACCO-FREE CAMPUS POLICY

The Contractor agrees that it will abide by and implement the District's Alcoholic Beverage and Tobacco-Free Campus Policy, which prohibits the use of alcoholic beverages and tobacco products, of any kind and at any time, in District-owned or leased buildings, on District property and in District vehicles. The Contractor shall procure signs stating "ALCOHOLIC BEVERAGE AND TOBACCO USE IS PROHIBITED" and shall ensure that these signs are prominently displayed in all entrances to school property at all times.

DATE:_____ _____
CONTRACTOR

By:_____
Signature

IRAN CONTRACTING ACT CERTIFICATION
OF ELIGIBILITY TO PROPOSAL FOR
CONTRACTS OF $ 1 MILLION OR MORE
(Public Contract Code sections 2202-2208)

Pursuant to Public Contract Code 2204. (a) A public entity shall require a person that submits a proposal or proposal to, or otherwise proposes to enter into or renew a contract with, a public entity with respect to a contract for goods or services of one million dollars ($1,000,000) or more to certify, at the time the proposal is submitted or the contract is renewed, that the person is not identified on a list created pursuant to subdivision (b) of Section 2203 as a person engaging in investment activities in Iran described in subdivision (a) of Section 2202.5, or as a person described in subdivision (b) of Section 2202.5, as applicable. A state agency shall submit the certification information to the Department of General Services.

To comply with this requirement, please insert your Contractor or financial institution name and Federal ID Number (if available) and complete **one** of the options below. Please note: California law establishes penalties for providing false certifications, including civil penalties equal to the greater of $250,000 or twice the amount of the contract for which the false certification was made; contract termination; and three-year ineligibility to proposal on contracts. (Public Contract Code section 2205.)

OPTION #1 – CERTIFICATION
I, the official named below, certify I am duly authorized to execute this certification on behalf of the Contractor/financial institution identified below, and the Contractor/financial institution identified below is not on the current list of persons engaged in investment activities in Iran created by DGS and is not a financial institution extending twenty million dollars ($20,000,000) or more in credit to another person/vendor, for 45 days or more, if that other person/vendor will use the credit to provide goods or services in the energy sector in Iran and is identified on the current list of persons engaged in investment activities in Iran created by DGS.

Contractor Name/Financial Institution	*Federal ID Number (or n/a)*
By (Authorized Signature)	
Printed Name and Title of Person Signing	
Date Executed	*Executed in*

OPTION #2 – EXEMPTION

Pursuant to Public Contract Code sections 2203(c) and (d), a public entity may permit a contractor/financial institution engaged in investment activities in Iran, on a case-by-case basis, to be eligible for, or to proposal on, submit a proposal for, or enters into or renews, a contract for goods and services.

If you have obtained an exemption from the certification requirement under the Iran Contracting Act, please fill out the information below, and attach documentation demonstrating the exemption approval.

Contractor Name/Financial Institution	*Federal ID Number (or n/a)*
By (Authorized Signature)	
Printed Name and Title of Person Signing	*Date Executed*

FLEET COMPLIANCE CERTIFICATION

Bidder hereby acknowledges that they have reviewed the California Air Resources Board's policies, rules and regulations and are familiar with the requirements of Title 13, California Code of Regulations, Division 3, Chapter 9, effective on January 1, 2024 (the "Regulation"). Bidder hereby certifies, subject to penalty for perjury, that the option checked below relating to the Bidder's fleet, and/or that of their subcontractor(s) ("Fleet") is true and correct:

- ☐ The Fleet is subject to the requirements of the Regulation, and the appropriate Certificate(s) of Reported Compliance have been attached hereto.

- ☐ The Fleet is exempt from the Regulation under section 2449.1(f)(2), and a signed description of the subject vehicles, and reasoning for exemption has been attached hereto.

- ☐ Bidder and/or their subcontractor is unable to procure R99 or R100 renewable diesel fuel as defined in the Regulation pursuant to section 2449.1(f)(3). Bidder shall keep detailed records describing the normal refueling methods, their attempts to procure renewable diesel fuel and proof that shows they were not able to procure renewable diesel (i.e. third party correspondence or vendor bids).

- ☐ The Fleet is exempt from the requirements of the Regulation pursuant to section 2449(i)(4) because this Project has been deemed an Emergency, as defined under section 2449(c)(18). Bidder shall only operate the exempted vehicles in the emergency situation and records of the exempted vehicles must be maintained, pursuant to section 2449(i)(4).

- ☐ The Fleet does not fall under the Regulation or are otherwise exempted and a detailed reasoning is attached hereto.

Name of Bidder: _____

Signature: _____

Name: _____

Title: _____

Date: _____

[End of Bid Documents to be Submitted with Bid]

AGREEMENT FORM

THIS AGREEMENT, entered into on the ***"TBD"*** in the County of Contra Costa, State of California, by and between the Liberty Union High School District, hereinafter called the "District", and **"TBD"**, hereinafter called the "Contractor".

WITNESSETH that the District and the Contractor for the consideration stated herein agree as follows:

ARTICLE 1 - SCOPE OF WORK: The Contractor shall furnish all labor, materials, equipment, tools, and utility and transportation services, and perform and complete all work required in connection with the ***Freedom High School Softball Batting Cages Project*** ("Project") in strict accordance with the Contract Documents enumerated in Article 7 below. The Contractor shall be liable to the District for any damages arising as a result of a failure to comply with that obligation, and the Contractor shall not be excused with respect to any failure to so comply by an act or omission of the Architect, Engineer, Inspector, Division of the State Architect (DSA), or representative of any of them, unless such act or omission actually prevents the Contractor from fully complying with the Contract Documents and the Contractor protests, in accordance with the Contract Documents, that the act or omission is preventing the Contractor from fully complying with the Contract Documents. Such protest shall not be effective unless reduced to writing and filed with the District office within seven (7) days of the date of occurrence of such act or omission preventing the Contractor from fully complying with the Contract Documents.

ARTICLE 2 - TIME OF COMPLETION: The District may give notice to proceed within ninety (90) days of the award of the bid by the District. Once the Contractor has received a notice to proceed, the Contractor shall reach Substantial Completion (See Article 1.1.46) of the Work within **Nine (9) Weeks** from receipt of the Notice to Proceed. This shall be called Contract Time. (See Article 8.1.1). It is expressly understood that time is of the essence.

Contractor has thoroughly studied the Project, the labor market, and the supply chain market for materials and equipment that are necessary to complete the Project, and has satisfied itself that the time period for this Project was adequate for the timely and proper completion of the Project within each milestone and within the Contract time. Further, Contractor has included in the analysis of the time required for this Project, items set forth in General Conditions Article 8.3.2.1, Submittal Schedules, Rain Day Float, and Governmental Delay Float.

In the event that the District desires to postpone giving the notice to proceed beyond this ninety (90) day period, it is expressly understood that with reasonable notice to the Contractor, giving the notice to proceed may be postponed by the District. It is further expressly understood by the Contractor, that the Contractor shall not be entitled to any claim of additional compensation as a result of the District's postponement of giving the notice to proceed.

If the Contractor believes that a postponement will cause hardship to it, the Contractor may terminate the Contract with written notice to the District within ten (10) days after receipt by the Contractor of the District's notice of postponement. It is further understood by the Contractor that in the event that the Contractor terminates the Contract as a result of postponement by the District, the District shall only be obligated to pay the Contractor for the work performed by the Contractor at the time of notification of postponement. Should the Contractor terminate the Contract as a result of a notice of postponement, the District shall have the authority to award the Contract to the next lowest responsible bidder.

ARTICLE 3 - LIQUIDATED DAMAGES: It being impracticable and infeasible to determine the amount of actual damage, it is agreed that the Contractor will pay the District the sum of ***two thousand dollars ($2,000)*** per calendar day for each and every day of delay beyond the Contract Time set forth in Article 2 of this Agreement (inclusive of Milestones that are critical on the critical path or noted as critical to the District) as liquidated damages and not as a penalty or forfeiture. In the event Liquidated Damages are not paid, the Contractor further agrees that the District may deduct such amount thereof from any money due or that may become due the Contractor under the Contract (See Article 9.6 and 2.2 of the General Conditions).

ARTICLE 4 - CONTRACT PRICE: The District shall pay to the Contractor as full consideration for the faithful performance of the Contract, subject to any additions or deductions as provided in the Contract Documents, the sum of ***"TBD" DOLLARS ($"TBD")***, said sum being the total amount stipulated in the Bid Contractor submitted. Payment shall be made as set forth in the General Conditions.

Should any Change Order result in an increase in the Contract Price, the cost of such Change Order shall be agreed to in advance by the Contractor and the District, subject to the monetary limitations set forth in Public Contract Code section 20118.4. In the event that the Contractor proceeds with a Change in work without an agreement between the District and Contractor regarding the cost of a Change Order, the Contractor waives any Claim of additional compensation for such additional work. In no event shall the Contractor be entitled to increase the Contract Price set forth above on account of any external factors including, but not limited to, inflation, labor shortages, and/or supply chain issues/shortages.

ARTICLE 5 - HOLD HARMLESS AGREEMENT: Contractor shall defend, indemnify and hold harmless District, Architect, Inspector, the State of California and their officers, employees, agents and independent contractors from any and all liabilities, claims, actions, liens, judgments, demands, damages, losses, costs or expenses of any kind arising from death, personal injury, property damage or other cause based or asserted upon any act, omission, or breach connected with or arising from the progress of Work or performance of service under this Agreement or the Contract Documents. As part of this indemnity, Contractor shall protect and defend, at its own expense, District, Architect, Construction Manager, Inspector, the State of California and their officers, employees, agents and independent contractors from any legal action including attorney's fees or other proceeding based upon such act, omission, breach or as otherwise required by this Article.

Furthermore, Contractor agrees to and does hereby defend, indemnify and hold harmless District, Architect, Construction Manager, Inspector, the State of California and their officers, employees, agents and independent contractors from every claim or demand made, and every liability, loss, damage, expense or attorney's fees of any nature whatsoever, which may be incurred by reason of:

(a) Liability for (1) death or bodily injury to persons; (2) damage or injury to, loss (including theft), or loss of use of, any property; (3) any failure or alleged failure to comply with any provision of law or the Contract Documents; or (4) any other loss, damage or expense, sustained by any person, firm or corporation or in connection with the Work called for in this Agreement or the Contract Documents, except for liability resulting from the sole or active negligence, or the willful misconduct of the District.

(b) Any bodily injury to or death of persons or damage to property caused by any act, omission or breach of Contractor or any person, firm or corporation employed by Contractor, either directly or by independent contract, including all damages or injury to or death of persons, loss (including theft) or loss of use of any property, sustained by any person, firm or corporation, including the District, arising out of

or in any way connected with Work covered by this Agreement or the Contract Documents, whether said injury or damage occurs either on or off District property, but not for any loss, injury, death or damages caused by the sole or active negligence or willful misconduct of the District.

(c) Any dispute between Contractor and Contractor's subcontractors/suppliers/Sureties, including, but not limited to, any failure or alleged failure of the Contractor (or any person hired or employed directly or indirectly by the Contractor) to pay any Subcontractor or Materialman of any tier or any other person employed in connection with the Work and/or filing of any stop notice or mechanic's lien claims.

(d) Any claims, allegations, penalties, assessments, or liabilities to the extent caused by the Contractor's failure or the failure of any Subcontractor of any tier, to fully comply with the DIR registration requirements under Labor Code section 1725.5 at all times during the performance of any Work on the Project and shall reimburse the District for any penalties assessed against the District arising from any failure by the Contractor or any Subcontractor of any tier from complying with Labor Code sections 1725.5 and 1771.1. Nothing in this paragraph, however, shall require the Contractor or any Subcontractor to be liable to the District or indemnify the District for any penalties caused by the District in accordance with Labor Code section 1773.3 (g).

Contractor, at its own expense, cost, and risk, shall defend, with counsel of the District's choosing, any and all claims, actions, suits, or other proceedings that may be brought or instituted against the District, its officers, agents or employees, on account of or founded upon any cause, damage, or injury identified herein Article 5 and shall pay or satisfy any judgment that may be rendered against the District, its officers, agents or employees in any action, suit or other proceedings as a result thereof.

The Contractor's and Subcontractors' obligation to defend, indemnify and hold harmless the Owner, Architect, Inspector, the State of California and their officers, employees, agents and independent contractors hereunder shall include, without limitation, any and all claims, damages, and costs for the following: (1) any damages or injury to or death of any person, and damage or injury to, loss (including theft), or loss of use of, any property; (2) breach of any warranty, express or implied; (3) failure of the Contractor or Subcontractors to comply with any applicable governmental law, rule, regulation, or other requirement; (4) products installed in or used in connection with the Work; and (5) any claims of violation of the Americans with Disabilities Act ("ADA").

Contractor shall reimburse Owner, Architect, Inspector, the State of California and their officers, employees, agents and independent contractors for any and all legal expenses and costs incurred by each of them in connection therewith or in enforcing the indemnity herein provided. The only limitations on this provision shall be those imposed by Civil Code Section 2782. Such indemnification shall extend to all claims, demands, or liabilities occurring after completion of the Project as well as during the progress of the Work.

This Hold Harmless Agreement shall survive termination of this Agreement, for any reason whatsoever, and binds each party's legal representatives, successors, and assigns.

ARTICLE 6 - PROVISIONS REQUIRED BY LAW: Each and every provision of law and clause required to be inserted in this Contract shall be deemed to be inserted herein, and this Contract shall be read and enforced as though it were included herein, and if through mistake or otherwise any such provision is not inserted or is not inserted correctly, then upon application of either party the Contract shall forthwith be physically amended to make such insertion or correction.

ARTICLE 7 - COMPONENT PARTS OF THE CONTRACT: The Contract entered into by this Agreement consists of the following Contract Documents, all of which are component parts of the Contract as if herein set out in full or attached hereto.

Notice Inviting Bids
Instructions to Bidders
Designation of Subcontractors
Non-Collusion Declaration
Bid Guarantee Form
Bid Bond
Bid Form
Contractor's Certificate Regarding Worker's Compensation
Acknowledgment of Bidding Practices Regarding Indemnity
DVBE Participation Statement and Close-Out Forms
Agreement Form
Payment Bond
Performance Bond
Guarantee
Escrow Agreement for Security Deposit In Lieu of Retention
Workers' Compensation/Employers Liability Endorsement
General Liability Endorsement
Automobile Liability Endorsement
Contractor's Certificate Regarding Drug-Free Workplace
Contractor's Certificate Regarding Alcohol and Tobacco
Iran Contracting Act Certification Form
Fleet Compliance Certification Form
Contractor's Certificate Regarding Background Checks
General Conditions
Supplementary and Special Conditions
Specifications
All Addenda as Issued Drawings/Plans
Substitution Request Form
Requirements, Reports and/or any other Documents in the Project Manual or Other Documents Issued to Bidders

All of the above named Contract Documents are intended to be complementary. Work required by one of the above named Contract Documents and not by others shall be done as if required by all.

ARTICLE 8 - PREVAILING WAGES: Wage rates for this Project shall be in accordance with the general prevailing rate of holiday and overtime work in the locality in which the work is to be performed for each craft, classification, or type of work needed to execute the Contract as determined by the Director of the Department of Industrial Relations. Copies of schedules of rates so determined by the Director of the Department of Industrial Relations are on file at the administrative office of the District and are also available from the Director of the Department of Industrial Relations. Monitoring and enforcement of the prevailing wage laws and related requirements will be performed by the Labor Commissioner/ Department of Labor Standards Enforcement (DLSE).

The following are hereby referenced and made a part of this Agreement and Contractor stipulates to the provisions contained therein.

1. Chapter 1 of Part 7 of Division 2 of the Labor Code (Section 1720 et seq.)

2. California Code of Regulations, Title 8, Chapter 8, Subchapters 3 through 6 (Section 16000 et seq.)

ARTICLE 9 - RECORD AUDIT: In accordance with Government Code section 8546.7(and Davis Bacon, if applicable) and Article 13.11 of the General Conditions, records of both the District and the Contractor shall be subject to examination and audit for a period of five (5) years after a Final Retention Payment or the Recording of a Notice of Completion, whichever occurs first.

ARTICLE 10 - CONTRACTOR'S LICENSE: The Contractor must possess throughout the Project a ***Class A and/or Class B*** Contractor's License, issued by the State of California, which must be current and in good standing.

IN WITNESS WHEREOF, this Agreement has been duly executed by the above named parties, on the day and year first above written.

DISTRICT:

_____
Typed or Printed Name

_____
Title

_____
Signature

Dated: _____

CONTRACTOR:

_____
Typed or Printed Name

_____
Title

_____
Signature

Dated: _____

_____
Type or Printed Name

_____
Title (Authorized Officers or Agents)

_____
Signature

(CORPORATE SEAL)

PAYMENT BOND

(CALIFORNIA PUBLIC WORK)

KNOW ALL MEN BY THESE PRESENTS:

THAT WHEREAS, the LIBERTY UNION HIGH SCHOOL DISTRICT (sometimes referred to hereinafter as "Obligee") has awarded to "TBD" (hereinafter designated as the "Principal" or "Contractor"), an agreement for the work described as follows: FREEDOM HIGH SCHOOL SOFTBALL BATTING CAGES PROJECT (hereinafter referred to as the "Public Work"); and

WHEREAS, said Contractor is required to furnish a bond in connection with said Contract, and pursuant to California Civil Code section 9550;

NOW, THEREFORE, We, "TBD", the undersigned Contractor, as Principal; and _____, a corporation organized and existing under the laws of the State of _____ , and duly authorized to transact business under the laws of the State of California, as Surety, are held and firmly bound unto the LIBERTY UNION HIGH SCHOOL DISTRICT and to any and all persons, companies, or corporations entitled by law to file stop notices under California Civil Code section 9100, or any person, company, or corporation entitled to make a claim on this bond, in the sum of "TBD" Dollars ($"TBD"), such sum being not less than one hundred percent (100%) of the total amount payable by said Obligee under the terms of said Contract, for which payment will and truly to be made, we bind ourselves, our heirs, executors and administrators, successors and assigns, jointly and severally, firmly by these presents.

THE CONDITION OF THIS OBLIGATION IS SUCH that if said Principal, its heirs, executors, administrators, successors, or assigns, or subcontractor, shall fail to pay any person or persons named in Civil Code section 9100; or fail to pay for any materials, provisions, or other supplies, used in, upon, for, or about the performance of the work contracted to be done, or for any work or labor thereon of any kind, or for amounts due under the Unemployment Insurance Code, with respect to work or labor thereon of any kind; or shall fail to deduct, withhold, and pay over to the Employment Development Department, any amounts required to be deducted, withheld, and paid over by Unemployment Insurance Code section 13020 with respect to work and labor thereon of any kind, then said Surety will pay for the same, in an amount not exceeding the amount herein above set forth, and in the event suit is brought upon this bond, also will pay such reasonable attorneys' fees as shall be fixed by the court, awarded and taxed as provided in California Civil Code section 9550 et seq.

This bond shall inure to the benefit of any person named in Civil Code section 9100 giving such person or his/her assigns a right of action in any suit brought upon this bond.

It is further stipulated and agreed that the Surety of this bond shall not be exonerated or released from the obligation of the bond by any change, extension of time for performance, addition, alteration or modification in, to, or of any contract, plans, or specifications, or agreement pertaining or relating to any scheme or work of improvement herein above described; or pertaining or relating to the furnishing of labor, materials, or equipment therefor; nor by any change or modification of any terms of payment or extension of time for payment pertaining or relating to any scheme or work of improvement herein above described; nor by any rescission or attempted rescission of the contract, agreement or bond; nor by any conditions

precedent or subsequent in the bond attempting to limit the right of recovery of claimants otherwise entitled to recover under any such contract or agreement or under the bond; nor by any fraud practiced by any person other than the claimant seeking to recover on the bond; and that this bond be construed most strongly against the Surety and in favor of all persons for whose benefit such bond is given; and under no circumstances shall the Surety be released from liability to those for whose benefit such bond has been given, by reason of any breach of contract between the Obligee and the Contractor or on the part of any obligee named in such bond; that the sole condition of recovery shall be that the claimant is a person described in California Civil Code section 9100, and who has not been paid the full amount of his or her claim; and that the Surety does hereby waive notice of any such change, extension of time, addition, alteration or modification herein mentioned.

IN WITNESS WHEREOF this instrument has been duly executed by the Principal and Surety above named, on the_____day of _____, 20___.

PRINCIPAL/CONTRACTOR:

_____

By: _____

SURETY:

_____

By: _____
Attorney-in-Fact

IMPORTANT: THIS IS A REQUIRED FORM.

Surety companies executing bonds must possess a certificate of authority from the California Insurance Commissioner authorizing them to write surety insurance defined in California Insurance Code section 105, and if the work or project is financed, in whole or in part, with federal, grant or loan funds, Surety's name must also appear on the Treasury Department's most current list (Circular 570 as amended).

Any claims under this bond may be addressed to:

(Name and Address of Surety)	(Name and Address of agent or representative for service for service of process in California)
_____	_____
_____	_____
Telephone:_____	Telephone: _____

A notary public or other office completing this certificate verifies only the identity of the individual who signed the document to which this certificate is attached, and not the truthfulness, accuracy, or validity of that document.

STATE OF CALIFORNIA)
) ss.
COUNTY OF)

On _____, before me, _____, personally appeared _____, who proved on the basis of satisfactory evidence to be the person(s) whose name(s) is/are subscribed to the within instrument and acknowledged to me that he/she/they executed the same in his/her/their authorized capacity(ies) as the Attorney-in-Fact of _____(Surety) and acknowledged to me that by his/her/their signature(s) on the instrument the person(s), or the entity upon behalf of which the person(s) executed the instrument.

I certify under PENALTY OF PERJURY under the laws of the State of California that the foregoing paragraph is true and correct.

WITNESS my hand and official seal.

_____ (SEAL)
Notary Public in and for said State

Commission expires:_____

NOTE: A copy of the power-of-attorney to local representatives of the bonding company must be attached hereto.

PERFORMANCE BOND

(CALIFORNIA PUBLIC WORK)

KNOW ALL MEN BY THESE PRESENTS:

THAT WHEREAS, the LIBERTY UNION HIGH SCHOOL DISTRICT (sometimes referred to hereinafter as "Obligee") has awarded to "TBD" (hereinafter designated as the "Principal" or "Contractor"), an agreement for the work described as follows: FREEDOM HIGH SCHOOL SOFTBALL BATTING CAGES PROJECT (hereinafter referred to as the "Public Work"); and

WHEREAS, the work to be performed by the Contractor is more particularly set forth in that certain contract for said Public Work dated "TBD" (hereinafter referred to as the "Contract"), which Contract is incorporated herein by this reference; and

WHEREAS, the Contractor is required by said Contract to perform the terms thereof and to provide a bond both for the performance and guaranty thereof.

NOW, THEREFORE, we, "TBD" the undersigned Contractor, as Principal, and _____, a corporation organized and existing under the laws of the State of _____, and duly authorized to transact business under the laws of the State of California, as Surety, are held and firmly bound unto the LIBERTY UNION HIGH SCHOOL DISTRICT in the sum of "TBD" Dollars ($"TBD"), said sum being not less than one hundred percent (100%) of the total amount payable by said Obligee under the terms of said Contract, for which amount well and truly to be made, we bind ourselves, our heirs, executors, administrators, successors, and assigns, jointly and severally, firmly by these presents.

THE CONDITION OF THIS OBLIGATION IS SUCH THAT, if the bounded Contractor, his or her heirs, executors, administrators, successors or assigns, shall in all things stand to and abide by, and well and truly keep and perform the covenants, conditions, and agreements in said Contract and any alteration thereof made as therein provided, on his or her part, to be kept and performed at the time and in the manner therein specified, and in all respects according to their intent and meaning; and shall faithfully fulfill guarantees of all materials and workmanship; and indemnify, defend and save harmless the Obligee, its officers and agents, as stipulated in said Contract, then this obligation shall become null and void; otherwise it shall be and remain in full force and effect.

The Surety, for value received, hereby stipulates and agrees that it shall not be exonerated or released from the obligation of this bond (either by total exoneration or pro tanto) by any change, extension of time, alteration in or addition to the terms of the contract or to the work to be performed there under or the specifications accompanying the same, nor by any change or modification to any terms of payment or extension of time for any payment pertaining or relating to any scheme of work of improvement under the contract. Surety also stipulates and agrees that it shall not be exonerated or released from the obligation of this bond (either by total exoneration or pro tanto) by any overpayment or underpayment by the Obligee that is based upon estimates approved by the Architect. The Surety stipulates and agrees that none of the aforementioned changes, modifications, alterations, additions, extension of time or actions shall in any way affect its obligation on this bond, and it does hereby waive notice of any such changes, modifications,

alterations, additions or extension of time to the terms of the contract, or to the work, or the specifications as well notice of any other actions that result in the foregoing.

Whenever Principal shall be, and is declared by the Obligee to be, in default under the Contract, the Surety shall promptly either remedy the default, or shall promptly take over and complete the Contract through its agents or independent contractors, subject to acceptance and approval of such agents or independent contractors by Obligee as hereinafter set forth, in accordance with its terms and conditions and to pay and perform all obligations of Principal under the Contract, including, without limitation, all obligations with respect to warranties, guarantees and the payment of Liquidated Damages; or, at Obligee's sole discretion and election, Surety shall obtain a bid or bids for completing the Contract in accordance with its terms and conditions, and upon determination by Obligee of the lowest responsible bidder, arrange for a contract between such bidder and the Obligee and make available as Work progresses (even though there should be a default or succession of defaults under the contract or contracts of completion arranged under this paragraph) sufficient funds to pay the cost of completion less the "balance of the Contract Price" (as hereinafter defined), and to pay and perform all obligations of Principal under the Contract, including, without limitation, all obligations with respect to warranties, guarantees and the payment of Liquidated Damages. The term "balance of the Contract Price," as used in this paragraph, shall mean the total amount payable to Principal by the Obligee under the Contract and any modifications thereto, less the amount previously paid by the Obligee to the Principal, less any withholdings by the Obligee allowed under the Contract. Obligee shall not be required or obligated to accept a tender of a completion contractor from the Surety.

Surety expressly agrees that the Obligee may reject any agent or contractor which may be proposed by Surety in fulfillment of its obligations in the event of default by the Principal. Unless otherwise agreed by Obligee, in its sole discretion, Surety shall not utilize Principal in completing the Contract nor shall Surety accept a bid from Principal for completion of the work in the event of default by the Principal.

No final settlement between the Obligee and the Contractor shall abridge the right of any beneficiary hereunder, whose claim may be unsatisfied.

The Surety shall remain responsible and liable for all patent and latent defects that arise out of or relate to the Contractor's failure and/or inability to properly complete the Public Work as required by the Contract and the Contract Documents. The obligation of the Surety hereunder shall continue so long as any obligation of the Contractor remains.

Contractor and Surety agree that if the Obligee is required to engage the services of an attorney in connection with enforcement of the bond, Contractor and Surety shall pay Obligee's reasonable attorneys' fees incurred, with or without suit, in addition to the above sum.

In the event suit is brought upon this bond by the Obligee and judgment is recovered, the Surety shall pay all costs incurred by the Obligee in such suit, including reasonable attorneys' fees to be fixed by the Court.

IN WITNESS WHEREOF, we have hereunto set our hands and seals this _____ day of _____, 20___.

PRINCIPAL/CONTRACTOR:

_____

By: _____

SURETY:

_____

By: _____
Attorney-in-Fact

The rate of premium on this bond is _____per thousand.

The total amount of premium charged: $_____(This must be filled in by a corporate surety).

IMPORTANT: THIS IS A REQUIRED FORM.

Surety companies executing bonds must possess a certificate of authority from the California Insurance Commissioner authorizing them to write surety insurance defined in California Insurance Code section 105, and if the work or project is financed, in whole or in part, with federal, grant or loan funds, Surety's name must also appear on the Treasury Department's most current list (Circular 570 as amended).

Any claims under this bond may be addressed to:

(Name and Address of Surety)	(Name and Address of agent or representative for service for service of process in California)
_____	_____
_____	_____
Telephone:_____	Telephone: _____

A notary public or other office completing this certificate verifies only the identity of the individual who signed the document to which this certificate is attached, and not the truthfulness, accuracy, or validity of that document.

STATE OF CALIFORNIA)
) ss.
COUNTY OF)

On _____, before me, _____, personally appeared _____, who proved on the basis of satisfactory evidence to be the person(s) whose name(s) is/are subscribed to the within instrument and acknowledged to me that he/she/they executed the same in his/her/their authorized capacity(ies) as the Attorney-in-Fact of _____(Surety) and acknowledged to me that by his/her/their signature(s) on the instrument the person(s), or the entity upon behalf of which the person(s) executed the instrument.

I certify under PENALTY OF PERJURY under the laws of the State of California that the foregoing paragraph is true and correct.

WITNESS my hand and official seal.

_____ (SEAL)
Notary Public in and for said State

Commission expires:_____

NOTE: A copy of the power-of-attorney to local representatives of the bonding company must be attached hereto.

GUARANTEE

Guarantee for _____. We hereby guarantee that the _____, which we have installed in _____ _____has been done in accordance with the Contract Documents, including without limitation, the drawings and specifications, and that the work as installed will fulfill the requirements included in the bid documents. The undersigned and its surety agrees to repair or replace any or all such work, together with any other adjacent work, which may be displaced in connection with such replacement, that may prove to be defective in workmanship or material within a period of one (1) year from the date of the Notice of Completion of the above-mentioned structure by the Liberty Union High School District, ordinary wear and tear and unusual abuse or neglect excepted.

In the event the undersigned or its surety fails to comply with the above-mentioned conditions within a reasonable period of time, as determined by the District, but not later than ten (10) days after being notified in writing by the District or within forty eight (48) hours in the case of an emergency or urgent matter, the undersigned and its surety authorizes the District to proceed to have said defects repaired and made good at the expense of the undersigned and its surety, who will pay the costs and charges therefor upon demand. The undersigned and its surety shall be jointly and severally liable for any costs arising from the District's enforcement of this Guarantee.

	Countersigned
_____	_____
(Proper Name)	(Proper Name)
By: _____	By: _____
_____	_____
(Signature of Subcontractor or Contractor)	(Signature of General Contractor if for Subcontractor)

Representatives to be contacted for service:

Name: _____

Address: _____

_____

Phone Number:_____

ESCROW AGREEMENT FOR SECURITY DEPOSITS IN LIEU OF RETENTION

This Escrow Agreement is made and entered into by and between the Liberty Union High School District, 20 Oak Street, Brentwood, CA 94513 hereinafter called "Owner", and _____ whose address is _____, hereinafter called "Contractor", and _____whose address is _____, hereinafter called "Escrow Agent".

For the consideration hereinafter set forth, the Owner, Contractor and Escrow Agent agree as follows:

1. Pursuant to Section 22300 of the Public Contract Code of the State of California, Contractor has the option to deposit securities with Escrow Agent as a substitute for Retention earnings required to be withheld by Owner pursuant to the Construction Contract entered into between the Owner and Contractor for the Freedom High School Softball Batting Cages Project in the amount of _____dated _____ (hereinafter referred to as the "Contract"). Alternatively, on written request of the Contractor, the Owner shall make payments of the Retention earnings directly to the escrow agent. When Contractor deposits the securities as a substitute for Contract earnings, the Escrow Agent shall notify the Owner within ten (10) days of deposit. The market value of the securities at the time of the substitution shall be at least equal to the cash amount then required to be withheld as Retention under the terms of the Contract between the Owner and Contractor. Securities shall be held in the name of the Owner, and shall designate the Contractor as beneficial owner.

2. The Owner shall make progress payments to the Contractor for such funds which otherwise would be withheld from progress payments pursuant to the Contract provisions, provided that the Escrow Agent holds securities in the form and amount specified above.

3. When the Owner makes payments of Retentions earned directly to the Escrow Agent, the Escrow Agent shall hold them for the benefit of the Contractor until such time as the escrow created under this Contract is terminated. The Contractor may direct the investment of the payments into securities. All terms and conditions of this Agreement and the rights and responsibilities of the parties shall be equally applicable and binding when the Owner pays the Escrow Agent directly.

4. Contractor shall be responsible for paying all fees for the expenses incurred by Escrow Agent in administering the Escrow Account and all expenses of the Owner. These expenses and payment terms shall be determined by the Owner, Contractor, and Escrow Agent.

5. The interest earned on the securities or the money market accounts held in escrow and all interest earned on that interest shall be for the sole account of Contractor and shall be subject to withdrawal by Contractor at any time and from time to time without notice to the Owner.

6. Contractor shall have the right to withdraw all or any part of the principal in the Escrow Account only by written notice to Escrow Agent accompanied by written authorization from the Owner to the Escrow Agent that Owner consents to the withdrawal of the amount sought to be withdrawn by Contractor.

7. The Owner shall have a right to draw upon the securities in the event of default by the Contractor. Upon seven (7) days' written notice to the Escrow Agent from the Owner of the notice of default under Article 2.2, Article 9.6 or Article 14, the Escrow Agent shall immediately convert the securities to cash and shall distribute the cash as instructed by the Owner.

8. Upon receipt of written notification from the Owner certifying that the Contract is final and complete, and that the Contractor has complied with all requirements and procedures applicable to the Contract, Escrow Agent shall release to Contractor all securities and interest on deposit less escrow fees and charges of the Escrow Account. The escrow shall be closed immediately upon disbursement of all moneys and securities on deposit and payment of fees and charges.

9. Escrow Agent shall rely on the written notifications from the Owner and the Contractor pursuant to Sections (5) to (8), inclusive, of this Agreement and the Owner and Contractor shall hold Escrow Agent harmless from Escrow Agent's release and disbursement of the securities and interest as set forth above.

10. The names of the persons who are authorized to give written notice or to receive written notice on behalf of the Owner and on behalf of Contractor in connection with the foregoing, and exemplars of their respective signatures are as follows:

On behalf of Owner:

_____
Title

_____
Name

_____
Signature

_____
Address

On behalf of Contractor:

_____
Title

_____
Name

_____
Signature

_____
Address

On behalf of Agent:

_____
Title

_____
Name

_____
Signature

_____
Address

At the time the Escrow Account is opened, the Owner and Contractor shall deliver to the Escrow Agent a fully executed counterpart of this Agreement.

IN WITNESS WHEREOF, the parties have executed this Agreement by their proper officers on the date set forth above.

OWNER	CONTRACTOR
_____	_____
Title	Title
_____	_____
Name	Name
_____	_____
Signature	Signature

INSURANCE DOCUMENTS & ENDORSEMENTS

The OCIP insurance endorsements and documents must be provided to the Liberty Union High School District within five (5) calendar days after receipt of notification of award. If the apparent low bidder fails to provide the documents required below, the District may award the Contract to the next lowest responsible and responsive bidder or release all bidders, and the bidder's bid security will be forfeited. All insurance provided by the bidder shall fully comply with the requirements set forth in Article 11 of the General Conditions.

DISABLED VETERAN BUSINESS ENTERPRISE (DVBE) CONTRACTOR CLOSE-OUT STATEMENT

The Contractor shall complete this form, as a condition to Final Payment, for purposes of reporting participation by Disabled Veteran Business Enterprises (DVBE) in the Contract for the Project/Bid No. specified below.

Project Name: FREEDOM HIGH SCHOOL SOFTBALL BATTING CAGES PROJECT

Bid No.: 26-27-04

DSA No.: 01-123111

Name	Address/Phone	Category of Work*	$ Amount of Contract

* Categories of work include: (1) construction services (specify services that DVBE will provide); (2) architecture and engineering services; (3) procurement of materials, supplies and equipment; and (4) information technology.

The undersigned, on behalf of the Contractor, certifies that DVBE participation on the Contract for Bid No. _____equaled _____dollars ($_____), which represents approximately _____percent (__%) of the total Contract price including change orders for the Project.

Company: _____

Name:_____

Title: _____

Signature: _____

Date: _____

CONTRACTOR CERTIFICATION REGARDING BACKGROUND CHECKS

(Modernization Projects)

_____certifies that it has performed one of the following:
[Name of contractor/consultant]

❑ Pursuant to Education Code section 45125.1, Contractor has conducted criminal background checks, through the California Department of Justice, of all employees providing services to the Liberty Union High School District, pursuant to the Contract/Purchase Order dated _____, and Contractor hereby certifies that none of the employees have been convicted of, or have an arrest pending final adjudication for, any serious or violent felonies, as specified in Penal Code sections 1192.7(c) and 667.5(c), respectively.

As further required by Education Code section 45125.1, attached hereto as Attachment "A" is a list of the names of the employees of the undersigned who may come in contact with pupils.

OR

❑ Pursuant to Education Code section 45125.2, Contractor will ensure the safety of pupils by one or more of the following methods:

❑ 1. The installation of a physical barrier at the worksite to limit contact with pupils.

❑ 2. Continual supervision and monitoring of all employees of the entity by an employee of the entity whom the Department of Justice has ascertained has not been convicted of a violent or serious felony.

I declare under penalty of perjury under the laws of the United States that the foregoing is true and correct.

Date_____, 20____

_____
[Name of Contractor/Consultant]

_____

By its:_____

ATTACHMENT A:

CONTRACTOR CERTIFICATION REGARDING BACKGROUND CHECKS

(INSERT NAMES OF EMPLOYEES WHO MAY COME IN CONTACT WITH PUPILS)

ARTICLE 1
DEFINITIONS

1.1 BASIC DEFINITIONS

NOTE: The following shall not be construed as a comprehensive list of all definitions in the Contract Documents and there may be other definitions set forth in the Contract Documents. Additionally, any references to any DSA forms, documents or requirements shall be construed to incorporate any updates, supplements, or additions. The Contractor shall be required to meet the latest DSA requirements applicable to the Project.

1.1.1 Action of the Governing Board is a vote of a majority of the District's Governing Board.

1.1.2 Approval means written authorization through action of the Governing Board.

1.1.3 Architect means the architect, engineer, or other design professional engaged by the District to design and perform general observation of the work of construction and interpret the Drawings and Specifications for the Project. (See ARTICLE 4)

1.1.4 As-Builts are a set of Plans and Specifications maintained by the Contractor clearly showing all changes, revisions, substitutions, field changes, final locations, and other significant features of the Project. The As-Builts shall be maintained continuously throughout the Work for the Project and is both a prerequisite to the issuance of Payment Application and a requirement for Contract Close-Out. (See Article 3.17)

1.1.5 Beneficial Occupancy is the point in time when a building (or buildings) is fit for occupancy and its intended use. Basic requirements are that the building is safe, at or near Substantial Completion, and all fire/life safety items are approved and operational. The fact that a building is occupied does not mean that the building is ready for Beneficial Occupancy if there are elements that are unsafe or if fire/life safety items are not approved and operational. Taking occupancy on a structure that is under a fire watch is not considered beneficial occupancy. Further, taking of Beneficial Occupancy is not a point in time when retention is due unless the entire Project has obtained a Certificate of Substantial Completion that meets the definition of 1.1.46.

1.1.6 Claims. A Claim is a request for payment, supported by back-up documentation which includes, invoices time sheets, or other documents substantiating legitimacy or entitlement that is submitted during the Project or immediately following the Project made prior to the Final Retention Payment Application and prior to Final Completion of the Project. A "Claim" means a separate demand by the Contractor for (1) time extension, (2) payment of money or damages arising from Work done by or on behalf of the Contractor pursuant to the CONTRACT and payment of which is not otherwise expressly provided for or the claimant is not otherwise entitled to, or (3) and amount the payment of which is disputed by the District. (See Article 4.6)

1.1.7 Change Order (CO). A CO is a written instrument prepared by the Architect and signed by the District (as authorized by the District's Governing Board), the Contractor, and the Architect, stating their agreement upon (1) A description of a change in the Work, (2) The amount of the adjustment in the Contract Sum, if any; and (3) The extent of the adjustment in the Contract Time, if any. (See Article 7.2)

1.1.8 Change Order Request (COR). A COR is a written request supported by backup documentation prepared by the Contractor requesting that the District and the Architect issue a CO based upon a proposed change, or a change that results in an adjustment in cost, time or both, or arising from an RFP, CCD or ICD. (See Article 7.6)

1.1.9 Close-Out means the process for Final Completion of the Project, but also includes the requirements for the DSA Certification that the Project is Complete (See DSA Certification Guide). (See Article 9.9)

1.1.10 Construction Change Document (CCD). A Construction Change Document is a DSA term that is utilized to address changes to the DSA approved Plans and Specifications. There are two types of Construction Change Documents. (1) DSA approved CCD Category A for work affecting structural, access or fire/ life safety of the Project which will require a DSA approval; and, (2) CCD Category B for work NOT affecting structural safety, access compliance or fire/ life safety that will not require a DSA approval (except to confirm that no approval is required). Both CCD Category A and Category B shall be set forth in DSA Form 140 and submitted to DSA as required. (See Article 7.3)

1.1.11 Complete/ Completion/ Final Completion means that all Work in the Contract Documents is finished, the requirements of the Contract Documents have been met, the Project has been Closed Out, and all Work has ceased on the Project. This may also be referred to as Final Completion. In most cases, the recording of a Notice of Completion shall represent Completion of the Project. Beneficial Occupancy does not mean the Work is Complete.

1.1.12 Completion Date is the date when all Work for the Project shall be Substantially Complete and is the date assigned at the end of the Contract Time for the Project. (See Article 1.1.46

1.1.13 Construction Manager. The Construction Manager is a consultant to the District contracted to assist in Project planning, management and construction of the Project. If there is a Construction Manager, they may assist in various aspects of the Project including, but not limited to Monitoring the progress of the construction, reviewing and monitoring the schedule, progress of work, monitoring pay requests, facilitating communications, advising the District and its Board of Education on various aspects of the construction process, monitoring the RFI, COR, CCD, ICD, RFP, Claims, Disputes and other Project related processes.

1.1.14 Contract or Agreement when the terms are used in these General Conditions shall be references to the Contract Documents as defined herein.

1.1.15 Contract Documents (sometimes referred to as Construction Documents) consist of the Agreement between District and Contractor (hereinafter the Agreement or Contract), Conditions of the Contract (General, Supplementary and other Conditions), Drawings, Specifications, Addenda issued prior to bid, instructions to bidders, notice to bidders, and the requirements contained in the Bid Documents, other documents listed in the Agreement, and Modifications issued after execution of the Contract. A Modification is a written amendment to the Contract signed by parties, a Change Order, a Construction Change Document, or a written order for a minor change in the Work issued by the Architect. The Contract Documents collectively form the Contract. The Contract represents the entire and integrated Agreement between the parties hereto and supersedes prior negotiations, representations, or agreements, either written or oral. The Contract may be amended or modified only by a written Modification. The Contract Documents shall not be construed to create a contractual relationship of any kind between the Architect and Contractor, between the District and any Subcontractor or Sub-subcontractor, or between any

persons or entities other than the District and the Contractor. The Architect shall, however, be entitled to performance and enforcement of obligations under the Contract intended to facilitate performance of the Architect's duties.

1.1.16 Contract Time is the time period specified in the Contract Documents in which the Project shall be completed. This is sometimes referred to a Contract Duration, or "time in which the Contractor has to complete the Project". (See Article 8.1.1)

1.1.17 Contractor, District, and Architect are those mentioned as such in the Agreement. They are treated throughout the Contract Documents as if they are of singular number and neuter gender. Any reference to "Owner" shall mean "District" or Liberty Union High School District.

1.1.18 Cure is the act of remedying a material failure to perform under the terms of the Contract Documents during the time provided to correct Contractor's Default. Specific time periods are provided to Cure and Correct a Contractor Default under Article 14 and for a Partial Default under Article 2.2 as well as elsewhere in the Contract Documents.

1.1.19 Days mean calendar days unless otherwise specifically stated.

1.1.20 Default is a material breach of Contract. A Termination for Cause under Article 14 is a declaration of Default of the Contract and shall act as a demand upon the Surety to perform under the terms of the Performance Bond. Partial Defaults may also be tendered to the Surety at District's discretion. (See Article 2.2)

1.1.21 Dispute. A dispute is a disagreement on terms or conditions of the Project where the Contractor's opinion of the Project, Payment, Change Order or Request for Proposal differs from that of the District or Architect. A dispute only rises to the level of a claim once the dispute is assembled with back-up documentation and presented for evaluation. (See Article 4.6)

1.1.22 District Representative is the person designated by the District to represent the District during the Construction for the Project. This District Representative shall have the delegated authority as further defined in Article 1.1.2. This District Representative may be an employee of the District who may have the delegated authority as set forth in Article 1.1.3, and may also include Construction Managers. In some cases, the District and its Board may be assisted by a Construction Manager. When a Construction Manager is assisting the District, the Contractor, Architect, and Inspector shall have a primary contact with the District's Construction Manager who will advise the District.

1.1.23 Drawings/Plans are graphic and pictorial portions of the Contract Documents prepared for the Project and approved changes thereto, wherever located and whenever issued, showing the design, location, and scope of the Work, generally including Plans, elevations, sections, details, schedules, and diagrams as drawn or approved by the Architect. Sometimes Drawings will also be included in Addenda,Change Orders, and Specifications.

1.1.24 DSA is the Division of State Architect. DSA is the agency that provides design and construction oversight for K-12 Schools, Community Colleges, and State Funded Charter School Projects. DSA is the responsible agency for this Project and Contractor has submitted a bid for the Project since Contractor is familiar with Contractor's responsibilities under the DSA requirements more thoroughly set forth at Title 24 of the California Code of Regulations. Contractor agrees to abide by the jurisdiction of DSA and shall construct the Project to conform with the approved Plans, Specifications, Addenda

Addenda, and Change Orders (inclusive of approved CCD's and ICD's issued by the District pending CCD approval). See DSA website.

1.1.25 Emergency shall be defined as a sudden, unexpected occurrence, involving a clear and imminent threat to the continuation of school classes, a critical path delay that will result in not being able to occupy the school when students arrive to use the facility, danger from the facility or from outside the facility, Act of God, or other action which requires immediate action to prevent or mitigate loss of, or damage to, life, health, property, or essential public services.

1.1.26 Float the total number of days an activity may be extended or delayed without delaying the Completion Date shown in the schedule. Float will fall into three categories: (1) Rain Days; (2) Governmental Delays; and, (3) Project Float. (See Article 8.1.4)

1.1.27 Immediate Change Directive. (ICD) A written order prepared by the Architect and signed by the District and the Architect, directing a change in the Work where the Work must proceed immediately and stating a proposed basis for adjustment, if any, in the Contract Sum or Contract Time, or both. (See Article 7.3)

1.1.28 Inspector of Record (IOR)/ Project Inspector (PI) is the individual retained by the District in accordance with Title 24 of the California Code of Regulations and who will be assigned to the Project

1.1.29 Notice of Non-Compliance (DSA Form 154) is a document issued by the Inspector if there is a deviation from the DSA approved Plans, Specifications, and Change Orders. (See Article 7.1.2)

1.1.30 Payment Application or Certificate of Payment is the Contractor's certified representation of the actual level of Work performed on the Project. Payment Applications are sometimes also called "Certificate of Payment", "Request for Payment", "Payment Application", or similar terms, and shall follow the Schedule of Values that are approved by the Architect, Inspector and District. (See Article 9.3)

1.1.31 Project is the complete construction of the Work performed in accordance with the Contract Documents.

1.1.32 Project Manual is the volume assembled for the Work which may include, without limitation, the bidding requirements, sample forms, Conditions of the Contract, and Specifications.

1.1.33 Provide shall include "provide complete in place," that is "furnish and install complete."

1.1.34 Punch List/ Punch Item/ Incomplete Punch Item is a list of minor repair items, prepared after the issuance of a Certificate of Substantial Completion, by the Inspector and Architect of Work required in order to complete the Contract Documents and ensure compliance with the DSA Approved Plans so the Project may be Closed Out. Issuance of the Retention Payment is dependent of the proper completion of the Punch List. (See Article 9.9)

1.1.34.1 *Contractor's List of Punch Items* is a list of minor repair items the Contractor submits when the Contractor considers the Work Substantially Complete. Submission of this List of Incomplete Punch Items is the Contractor's representation that the Project is Substantially Complete. (See Article 9.9.1.1)

1.1.35 Request for Information (RFI) is a written request prepared by the Contractor requesting the Architect to provide additional information necessary to clarify or amplify an item which the Contractor believes is not clearly shown or called for in the Drawings or Specifications, or to address problems which have arisen under field conditions. (See Article 7.4)

1.1.36 Request for Proposal (RFP) is a written request prepared by the Architect (and/or CM) requesting the Contractor to submit to an estimate of the effect of a proposed change on the Contract Price and (if applicable) the Contract Time. (See Article 7.5)

1.1.37 Safety Orders are those issued by any city, county, state or federal agency having jurisdiction over the Project.

1.1.38 Schedule is the Contractor's view of the practical way in which the Work will be accomplished. In this Agreement there is a requirement for a Baseline Schedule and regular Schedule Updates that show all Work to be completed during the Contract Time and shall include all items listed under Article 8.3.2.9. See Article 8 of the General Conditions.

1.1.39 Schedule of Values is a detailed breakdown of the Contract Price for each Project, building, Phase of Work or Site as determined by the District. This Schedule of Values shall adequately detail the price for the Work so Progress Payments Applications can be meaningfully reviewed by the Inspector, Architect of Record, Engineer of Record, and District. (See Article 9.2)

1.1.40 Separate Contracts are Contracts that the District may have with other Contractors, vendors, suppliers, or entities to perform Work on the Project. This may include, but is not limited to Multi-Prime Trade Contractors, furniture installers, testing agencies, clean-up contractors, or network or low voltage contractors. Contractor shall plan for certain other contractors that may also be working on the Project site and address these other contractors in Contractor's Schedule. (See Article 6)

1.1.41 Site refers to the grounds of the Project as defined in the Contract Documents and such adjacent lands as may be directly affected by the performance of the Work.

1.1.42 Specifications are that portion of the Contract Documents consisting of the written requirements for material, equipment, construction systems, instructions, quality assurance standards, workmanship, and performance of related services.

1.1.43 Standards, Rules, and Regulations referred to are recognized printed standards and shall be considered as one and a part of these Specifications within limits specified. Federal, state and local regulations are incorporated into the Contract Documents by reference.

1.1.44 Stop Work Order, or an Order to Comply, is issued when either (1) the Work proceeds without DSA approval; (2) the Work proceeds without a DSA Inspector of Record, or (3) where DSA determines that the Work is not being performed in accordance with applicable rules and regulations, and would compromise the structural integrity of the Project or would endanger lives. If a Stop Work Order is issued, the Work in the affected area shall cease until DSA withdraws the Stop Work Order. Pursuant to Education Code section 17307.5(b), the District shall not be held liable in any action filed against the District for any delays caused by compliance with the Stop Work Order

1.1.45 Subcontractor, as used herein, includes those having direct or indirect contracts with Contractor and ones who furnished labor, material or services for a special design according to Plans, Drawings, and Specifications of this Work.

1.1.46 Substantial Completion/ Substantially Complete(d) is not reached unless and until each of the following four (4) conditions have been met: (1) all contractually required items have been installed with the exception of only minor and Incomplete Punch List Items (See Article 9.9.1.2); (2) All Fire/Life Safety Systems have been installed, and are working and signed off on the DSA Form 152 Inspection Card, and all building systems including mechanical, electrical and plumbing are all functioning; (3) all other items in the DSA Form 152 Inspection Card for the Project have been approved and signed off; and (4) the Project is fit for occupancy and its intended use. For the purposes of this Contract, any references to Completion Date means Substantial Completion Date.

1.1.47 Substitution is a change in product, material, equipment, or method of construction from those required by the Construction Documents proposed by the Contractor. For this Project, a Substitution is subject to the filing of a Construction Substitution Request Form at the time of bid and meeting the requirements of Article 3.10.

1.1.48 Supplementary Conditions/ Supplementary General Conditions/ Special Conditions are terms that are sometimes used interchangeably and refer to any additional requirements or changes to the General Conditions as noted.

1.1.49 Surety is the person, firm, or corporation that executes as a bid bond, Payment Bond or Performance Bond guarantor on the Contractor's Bid, Contractor's Performance on the Contract and Payment of the Contractor's Subcontractors, material suppliers, vendors and labor on the Project. The Surety is bound to the same extent as the Contractor is bound once a Default occurs. A default includes a Termination for Substantial Failure to Perform under Article 14, but also includes any breach of Contract and is subject to the requirements and responsibilities as set forth in the Performance Bond.

1.1.50 Work shall include all labor, materials, services and equipment necessary for the Contractor to fulfill all of its obligations pursuant to the Contract Documents. It shall include the initial obligation of any Contractor or Subcontractor who performs any portion of the Work, to visit the Site of the proposed Work (a continuing obligation after the commencement of the Work), to fully acquaint and familiarize itself with the conditions as they exist and the character of the operations to be carried out under the Contract Documents, and make such investigation as it may see fit so that it shall fully understand the facilities, physical conditions, and restrictions attending the Work under the Contract Documents. Each such Contractor and its Subcontractors shall also thoroughly examine and become familiar with the Drawings, Specifications, and associated Contract Documents and bid documents before preparing and submitting any bid.

1.1.51 Workers include laborers, workers, and mechanics.

1.2 EXECUTION, CORRELATION AND INTENT

1.2.1 Correlation and Intent

1.2.1.1 *Documents Complementary and Inclusive*. The Contract Documents are complementary and are intended to include all items required for the proper execution and completion of the Work. All Contract Documents form the Contractor's Contract with the District. Any item of Work

mentioned in the Specifications and not shown on the Drawings, or shown on the Drawings and not mentioned in the Specifications, shall be provided by Contractor as if shown or mentioned in both. The Contractor is bound to provide the Work complete and is under a legal duty to carefully study Plans and schedule operations well ahead of time and identify inconsistencies with the Plans and Specifications and call such inconsistencies to the attention of the Architect or Registered Engineer through the Inspector under Section 4-343(b) of Title 24.

1.2.1.2 *Work to be Complete*. Contractor has thoroughly studied the Contract Documents and understands that the District contracted with Contractor to provide a complete Project which means complete systems and buildings. The entire set of Contract Documents shows a complete Project and Contractor agrees that there are multiple disciplines putting together a set of Contract Documents. Thus, if portions of a system are shown on some Drawings and not others, this does not mean the Contractor is to only provide part of a system. For example, if an air conditioning unit is shown on the mechanical Drawings, the plumbing for the air conditioning is shown on another Drawing, and the electrical shown on the electrical Drawings, the Contractor is to provide a complete and working air conditioning system. The only time when an item is supplied incomplete is if the system is shown specifically as incomplete since others will be completing the system. Work includes, but is not limited to materials, workmanship, and manufacture of fabrication of components for the Project.

1.2.1.3 *Coverage of the Drawings and Specifications*. The Drawings and Specifications generally describe the Work to be performed by Contractor. Generally, the Specifications describe Work which cannot be readily indicated on the Drawings and indicate types, qualities, and methods of installation of the various materials and equipment required for the Work. It is not intended to mention every item of Work in the Specifications, which can be adequately shown on the Drawings, or to show on the Drawings all items of Work described or required by the Specifications even if they are of such nature that they could have been shown. All materials or labor for Work, which is shown on either the Drawings or the Specifications (or is reasonably inferable therefrom as being necessary to complete the Work), shall be provided by the Contractor. The Contractor is responsible for the whole Project as contractually set forth as the Contract Documents. It is intended that the Work be of sound, quality construction, and the Contractor shall be responsible for the inclusion of adequate amounts to cover installation of all items indicated, described, or implied in the portion of the Work to be performed by them.

1.2.1.4 *Conflicts*. In the event there is a discrepancy between the various Contract Documents, it is intended that the more stringent, higher quality, and greater quantity of Work shall apply.

1.2.1.5 *Conformance with Laws*. Each and every provision of law required by law to be inserted in this Contract shall be deemed to be inserted herein, and the Contract shall be read and enforced as though it were included herein, even if through mistake or otherwise any such provision is not inserted, or is not correctly inserted. Contractor, all Subcontractors and any and all workers performing Work on this Project shall fully comply with all laws, ordinances, codes, rules and regulations of all governmental authorities and public and municipal utilities affecting the construction and operation of the physical plant of the Project, all quasi-governmental and other regulations affecting the construction and operation of the physical plant of the Project, and other special requirements, if any, designated in the Contract Documents including, but not limited to, any existing and future order, regulations, guidelines or other requirements issued by any federal, state or local authority applicable to the Project. All workers shall comply with current recommendations and requirements related to COVID-19. All workers must fully comply with any current and future orders and recommendations issued by the County where the District is located including, but not limited to, the County Public Health Department, as well as other applicable guidelines and

recommendations issued by OSHA and CDC. If there are any inconsistencies or conflicts with any guidelines or recommendations, the stricter and more stringent provisions shall apply and prevail.

Before commencing any portion of the Work, Contractor shall check and review the Drawings and Specifications for such portion for conformance and compliance with all laws, ordinances, codes, rules and regulations of all governmental authorities and public and municipal utilities affecting the construction and operation of the physical plant of the Project, all quasi-governmental and other regulations affecting the construction and operation of the physical plant of the Project, and other special requirements, if any, designated in the Contract Documents. Such checking shall include review of Title 24 of the California Code of Regulations, California Building Code, local utility, local water connection, local grading and all other applicable agencies. In the event Contractor observes any violation of any law, ordinance, code, rule or regulation, or inconsistency with the Contract Documents, Contractor shall, within five (5) days, notify the Inspector, Architect and District in writing of same and shall ensure that any such violation or inconsistency shall be corrected in the manner provided hereunder prior to the construction of that portion of the Project. (See Title 24 Section 4-343)

The Contractor shall bear all expenses of correcting Work done contrary to said laws, ordinances, rules, and regulations if the Contractor performed same (1) without first consulting the Architect for further instructions regarding said Work or (2) disregarded the Architect's instructions regarding said Work.

1.2.1.6 *Ambiguity and Inconsistency*. Before commencing any portion of the Work, Contractor shall carefully examine all Drawings and Specifications and other information given to Contractor as to materials and methods of construction and other Project requirements. Prior to commencing any portion of the Work, Contractor shall notify Architect and District in writing of any perceived or alleged error, inconsistency, conflict, ambiguity, or lack of detail or explanation in the Drawings and Specifications in the manner provided herein. If the Contractor or its Subcontractors, material or equipment suppliers, or any of their officers, agents, and employees performs, permits, or causes the performance of any Work under the Contract Documents, which it knows or should have known to be in error, inconsistent, or ambiguous, or not sufficiently detailed or explained, Contractor shall bear any and all costs arising therefrom including, without limitation, the cost of correction thereof without increase or adjustment to the Contract Price or the time for performance. Contractor shall maintain an adequate inspection system and perform personal observations and review work and pre-plan the project to ensure the Work performed under the Contract conforms to Contract requirements. Contractor shall maintain records of such review and observation to ensure strict compliance with the terms of the Contract.

1.2.1.7 *Typical Parts and Sections.* Whenever typical parts or sections of the Work are completely detailed on the Drawings, and other parts or sections which are of the same construction are shown in outline only, the complete or more detailed shall apply to the Work which is shown in outline.

1.2.1.8 *Dimensions.* Dimensions of Work shall not be determined by scale or rule. Figured dimensions shall be followed at all times. If figured dimensions are lacking on Drawings, Architect shall supply them on request. The Architect's decisions on matters relating to aesthetic effect will be final.

1.2.2 Addenda and Deferred Approvals

1.2.2.1 *Addenda* are the changes in Specifications, Drawings, Contract Documents, and Plans which have been authorized in writing by the District or Architect, and which alter, explain, or clarify the Contract Documents. Addenda shall govern over all

other Contract Documents. Subsequent addenda issued shall govern over prior addenda unless otherwise specified in the addenda.

1.2.2.2 *Deferred Approvals*. Deferred Approvals are Submittals that are reviewed by the Architect (or Engineer of Record) and submitted to DSA for approval based on thorough detailing of manufacturer and Project specific design. See Article 3.9.1and 3.9.3. The Deferred Approval item cannot be fully detailed on the originally approved Drawings or Specifications because of variations in product design and manufacture. Contract Documents which require Deferred Approval items are meant to be for illustration purposes only. Approval of Plans for such a portion of the Work may be deferred until the material suppliers and Subcontractors are selected. All Deferred Approvals are noted in the Plans and Specifications. Contractor is responsible for all Deferred Approval requirements set forth in the Contract Documents. Contractor is responsible to comply with all laws, building codes, Title 24 and regulations necessary to obtain all necessary approvals, including those required from the Division of the State Architect ("DSA") and the State Fire Marshall. Contractor shall not be granted an extension of time for failure to plan, schedule for and obtain necessary approvals. Contractor shall Schedule all Deferred Approval items in the Baseline Schedule and Schedule Updates under Article 3.9.6

1.2.3 Specification Interpretation

1.2.3.1 *Titles*. The Specifications are separated into titled sections for convenience only and not to dictate or determine the trade or craft involved.

1.2.3.2 *As Shown, Etc*. Where "as shown," "as indicated," "as detailed," or words of similar import are used, reference is made to the Drawings accompanying the Specifications unless otherwise stated. Where "as directed," "as required," "as permitted," "as authorized," "as accepted," "as selected," or words of similar import are used, the direction, requirement, permission, authorization, approval, acceptance, or selection by Architect is intended unless otherwise stated.

1.2.3.3 *General Conditions*. The General Conditions and Supplementary General Conditions are a part of the Contract Documents which further defines and refines the Contract entered between the Contractor and District.

1.2.3.4 *Abbreviations*. In the interest of brevity, the Specifications are written in an abbreviated form and may not include complete sentences. Omission of words or phrases such as "Contractor shall," "shall be," etc., are intentional. Nevertheless, the requirements of the Specifications are mandatory. Omitted words or phrases shall be supplied by inference in the same manner as they are when a "note" occurs on the Drawings. In the interest of brevity, the Contract Documents frequently omit modifying words such as "all" and "any" and articles such as "the" and "an," but the fact that a modifier or an article is absent from one statement and appears in another is not intended to affect the interpretation of either statement.

1.2.3.5 *Plural*. Words in the singular shall include the plural whenever applicable or the context so indicates.

1.2.3.6 *Metric*. The Specifications may indicate metric units of measurement as a supplement to U.S. customary units. When indicated thus: 1" (25 mm), the U. S. customary unit is specific, and the metric unit is nonspecific. When not shown with parentheses, the unit is specific. The metric units correspond to the "International System of Units" (SI) and generally follow ASTM E 380, "Standard for Metric Practice."

1.2.3.7 *Standard Specifications*. Any reference to standard specifications of any society, institute, association, or governmental authority is a reference to the organization's standard specifications, which are in effect at the date of the Contractor's proposal unless directed otherwise. If applicable specifications are revised prior to completion of any part of the Work, the Contractor may, if acceptable to Architect, perform such Work in accordance with the revised specifications. The standard specifications, except as modified in the Specifications for the Project, shall have full force and effect as though printed in the Specifications. Architect will furnish, upon request, information as to how copies of the standard specifications referred to may be obtained.

1.2.4 Rules of Document Interpretation

1.2.4.1 In the event of conflict within the Drawings, the following rules shall apply:

a. General Notes, when identified as such, shall be incorporated into other portions of Drawings.

b. Schedules, when identified as such, are complementary with other notes and other portions of Drawings including those identified as General Notes.

c. Larger scale Drawings shall take precedence over smaller scale Drawings.

d. At no time shall the Contractor base construction on scaled Drawings.

1.2.4.2 Specifications shall govern as to materials, workmanship, and installation procedures.

1.2.4.3 If Contractor observes that Drawings and Specifications are in conflict, Contractor shall, prior to commencing work, notify the Architect in writing for the purposes of obtaining an interpretation of the Contact Documents.

1.2.4.4 In the case of conflict or inconsistencies, the order of precedence shall be as follows:

a. General Conditions take precedence over Drawings and Specifications.

b. Supplemental Conditions take precedence over General Conditions.

c. The Agreement Form shall take precedence over the Supplemental Conditions.

d. In the case of disagreement or conflict between or within Specifications, and Drawings, the more stringent, higher quality, and greater quantity of Work shall apply.

e. Addenda shall take ~~preceden~~ce over Drawings and Specifications.

f. General Conditions shall take precedence over Addenda.

g. Drawings and Specifications take precedence over the Soils Report.

1.3 OWNERSHIP AND USE OF ARCHITECT'S DRAWINGS, SPECIFICATIONS AND OTHER DOCUMENTS

The Drawings, Specifications, and other Contract Documents for the Project are the property of the District and/or Architect pursuant Contract requirements between the District and Architect. The Contractor may retain one Contract record set. Neither the Contractor nor any Subcontractor, or material or equipment supplier shall own or claim a Copyright in the Drawings, Specifications, and other documents prepared by the Architect. All copies except the Contractor's record set, shall be returned or properly accounted for upon completion of the Work. The Drawings, Specifications, and other documents prepared by the Architect, and copies thereof furnished to the Contractor are not to be used by the Contractor or any Subcontractor, Sub-subcontractor, or material or equipment supplier on other projects or for additions to this Project outside the scope of the Work. The District and/or Architect hereby grants the Contractor, Subcontractors, Sub-subcontractors, and material or equipment suppliers a limited license to use applicable portions of the Drawings, Specifications, and other documents prepared for the Project in the execution of their Work under the Contract Documents. Submittal or distribution to meet official regulatory requirements or for other purposes in connection with this Project is not to be construed as publication in derogation of the District's property interest or other reserved right.

ARTICLE 2
DISTRICT

2.1 INFORMATION AND SERVICES REQUIRED OF THE DISTRICT

2.1.1 Site Survey

The District will furnish, at its expense, a legal description of the Site and a land survey showing the boundaries of the Site. Contractor shall be responsible for all surveys regarding location of construction, grading and site work.

2.1.2 Soils

When required by the scope of the Project, the District will furnish, at its expense, the services of geotechnical engineers or consultants when reasonably required and deemed necessary by the Architect or as required by local or state codes. Such services, with written reports and appropriate written professional recommendations, may include test boring, test pits, soil bearing values, percolation tests, air and water pollution tests, and ground corrosion and resistivity tests, including necessary operations for determining subsoil, air, and water conditions.

2.1.3 Soils Report Part of the Contract Documents: Contractor Reliance

A soils investigation report has been obtained from test holes at the Site, and such report is incorporated into this Contract and made available for the Contractor's use in preparing its bid and Work under this Contract. Where the Plans and Specifications are more specific and provide more significant structure, systems, reinforcing, thicknesses, or construction methods, the Drawings shall control over the soils report. The soils report is available at the Architect's office for review and it is Contractor's responsibility to ensure that Contractor has reviewed the soils investigation report. Any information obtained from such report or any other information given on Drawings as to subsurface soil condition or to elevations of existing grades or elevations of underlying rock is approximate only. If, during the course of Work under this Contract, Contractor encounters subsurface conditions which differ materially from those indicated in the soils report, then Contractor shall notify the District within five (5) calendar days of discovery of the condition, and changes to the Contract Price may be made in accordance with Article 7 entitled "Changes in the Work." Contractor agrees that no claim against District will be made by Contractor for damages and hereby waives any rights to damages in the event the Contractor fails to notify District within the five-day period mentioned above.

WARNING: DISTRICT DOES NOT WARRANT THE SOILS AT THE PROJECT SITE. CONTRACTOR HAS REVIEWED AND IS FAMILIAR WITH THE REQUIREMENTS OF THE SOILS INVESTIGATION REPORT. CONTRACTOR UNDERSTANDS THAT PLANS, DRAWINGS AND SPECIFICATIONS SUPERSEDE THE SOILS REPORT IF THERE ARE CONFLICTS. FURTHER, IN ADDITION TO THE INFORMATION IN THE SOILS REPORT, CONTRACTOR HAS CONDUCTED AN INDEPENDENT INVESTIGATION OF THE PROJECT SITE AND THE SOILS CONDITIONS OF THE SITE. DISTRICT DOES NOT WARRANT THE SOILS CONDITIONS OF THE SITE AND CONTRACTOR IS FULLY RESPONSIBLE TO ASCERTAIN SITE CONDITIONS

FOR THE PURPOSES OF DETERMINING CONSTRUCTION MEANS AND METHODS PRIOR TO COMMENCING CONSTRUCTION.

2.1.4 Utilities

2.1.4.1 *Location of Point of Connection*. The locations shown for the point of connection are approximate. It shall be the responsibility of the Contractor to determine the exact location of all service connections.

2.1.4.2 *Regional Notification Center.* Contractor, except in an emergency, shall contact the appropriate regional notification center at least two (2) business days prior to commencing any excavation if the excavation will be conducted in an area or in a private easement which is known, or reasonably should be known, to contain subsurface installations other than the underground facilities owned or operated by the District, and obtain an inquiry identification number from that notification center. See Government Code section 4216.3. No excavation shall be commenced and carried out by the Contractor unless such an inquiry identification number has been assigned to the Contractor or any Subcontractor of the Contractor and the District has been given the identification number by the Contractor. Any damages arising from failure to make appropriate regional notification shall be at the sole risk of Contractor. Contractor shall solely be responsible for any fines, penalties or damages for violation of this Article and Government Code section 4216.6 or 4216.7. Any delays caused by failure to make appropriate regional notification shall be at the sole risk of Contractor and shall not be considered for extension of time pursuant to Article 8.4.

2.1.4.3 *Utilities - Removal and Restoration.* The District has endeavored to determine the existence of utilities at the Site of the Work from the records of the District of known utilities in the vicinity of the Work. The positions of these utilities as derived from such records are shown in the Contract Documents. Thus, the locations of the main or trunklines located on the Drawings are approximate locations and not exact.

No excavations were made to verify the locations shown for underground utilities. Other than the main or trunkline, which the District has endeavored to locate on the Plans, service connections or laterals to these utilities may not be shown on the Plans. It shall be the responsibility of the Contractor to determine the exact location of all service connections. The Contractor shall make its own investigations, including exploratory excavations, to determine the locations and type of service connections, prior to commencing work which could result in damage to such utilities. The Contractor shall immediately notify the District's representative as to any utility main or trunkline discovered by Contractor in a different position than provided by the Regional Notification Center. With respect to main or trunklines, Contractor is to immediately notify District if the location is substantially different than as shown in the Contract Documents.

Contractor shall coordinate its Work with all utilities, including, but not limited to electricity, water, gas and telephone and meet with said utilities prior to the start of any work. Contractor shall show timing of all utility coordination activities under the Scheduling requirements of Article 8.

2.1.4.4 *Other Utilities.* In case it should be necessary to remove, relocate, or temporarily maintain a utility because of interference with the Work, the work on the utility shall be performed and paid for as follows:

When it is necessary to remove, relocate or temporarily maintain a service connection, the cost of which is not required to be borne by the owner of the service connection, the Contractor shall bear all expenses incidental to the work on the service connection. The work on the service connection shall be done in a manner satisfactory to the owner thereof; it being understood that the owner of the service connection has the option of doing such work with his own forces or permitting the work to be done by the Contractor.

When it is necessary to remove, relocate, or temporarily maintain a utility which is in the position shown on the Plans, the cost of which is not required to be borne by the owner thereof, the Contractor shall bear all expenses incidental to the work on the utility. The work on the utility shall be done in a manner satisfactory to the owner thereof; it being understood that the owner of the utility has the option of doing such work with his own forces or permitting the work to be done by the Contractor.

When it is necessary to remove, relocate, or temporarily maintain a utility which is not shown on the Plans or is in a position different from that shown on the Plans and were it in the position shown on the Plans would not need to be removed, relocated, or temporarily maintained, and the cost of which is not required to be borne by the owner thereof, the District will make arrangements with the owner of the utility for such work to be done at no cost to the Contractor, or will require the Contractor to do such work in accordance with Article 7 or will make changes in the alignment and grade of the Work to obviate the necessity to remove, relocate, or temporarily maintain the utility. Changes in alignment and grade will be ordered in accordance with Article 7 herein.

No representations are made that the obligations to move or temporarily maintain any utility and to pay the cost thereof is or is not required to be borne by the owner of such utility, and it shall be the responsibility of the Contractor to investigate to find out whether said cost is required to be borne by the owner of the utility.

The right is reserved to governmental agencies and to owners of utilities to enter at any time upon any street, alley, right-of-way, or easement for the purpose of making changes in their property made necessary by the Work and for the purpose of maintaining and making repairs to their property.

2.1.5 Existing Utility Lines; Removal, Relocation

2.1.5.1 *Main or Trunkline Facilities*. If the Contractor while performing the Contract discovers utility facilities not identified in the Contract Documents, Contractor shall notify the District and utility in writing prior to commencing work.

The owner of the public utility shall have the sole discretion to perform repairs or relocation work or permit the Contractor to do such repairs or relocation work at a reasonable price.

The Contractor shall exercise reasonable care and shall be compensated by the District for the actual verified field costs of locating, and removing, relocating, protecting or temporarily maintaining such main or trunkline utility facilities located in a substantially different location than in the Plans and Specifications, and for equipment in use on the project necessarily idled during such work. This Work shall be performed in accordance with Article 7 of these General Conditions.

2.1.5.2 *Assessment*. Nothing in these subparagraphs shall be deemed to require the District to indicate the presence of existing service laterals or appurtenances whenever the presence of such

utilities on the Site can be inferred from the presence of other visible facilities, such as buildings, or meter junction boxes on or adjacent to the Site and could be inferred from the Main or Trunkline shown on the Drawings.

2.1.5.3 *Notification*. If the Contractor, while performing Work under this Contract, discovers utility facilities not identified by the District in the Contract Documents. Contractor shall, within five (5) days, notify the District and the utility in writing. If Contractor fails to notify the District within forty eight hours after discovery of any utility facilities not identified by District in the Contract Documents, Contractor waives all rights to be compensated for any extra Work or damages resulting from such discovered utilities.

2.1.6 Easements

District shall secure and pay for easements for permanent structures or permanent changes in existing facilities, if any, unless otherwise specified in the Contract Documents.

2.2 DISTRICT'S RIGHT TO CARRY OUT THE WORK DUE TO PARTIAL DEFAULT IN A SPECIFIC SEGREGATED AREA OF WORK (48 HOUR NOTICE TO CURE AND CORRECT)

If the Contractor Defaults or neglects to carry out the Work in accordance with the Contract Documents, the District may provide forty-eight (48) hour written notice to cure (a shorter period of time in the case of Emergency or a critical path delay as defined in Article 2.2.1) Contractor's Partial Default in a specific segregated area of work. The District's right to issue a Partial Default of the Contractor's Work and take over that segregated area of Work includes, but is not limited to:

1. Failure to supply adequate workers on the entire Project or any part thereof;
2. Failure to supply a sufficient quantity of materials;
3. Failure to perform any provision of this Contract;
4. Failure to comply with safety requirements, or due to Contractor is creation of an unsafe condition;
5. Cases of bona fide emergency;
6. Failure to order materials in a timely manner;
7. Failure to prepare Deferred Approval items or Shop Drawings in a timely manner;
8. Failure to comply with Contractor's Baseline or Update Schedule, meet critical Milestones which would result in a delay to the critical path, or delay the Contract Time;
9. Failure to comply with the Subletting and Subcontracting Fair Practices, Public Contract Code section 4100, et seq.
10. Failure to meet the requirements of the Americans with Disabilities Act;
11. Failure to complete Punch List work;

12. Failure to proceed on an Immediate Change Directive

13. Failure to correct a Notice of Deviation

If during the forty eight (48) hour period, the Contractor fails to Cure and correct the deficiency noted in the 48 hour notice of Partial Default with diligence and promptness, the District may correct such deficiencies without prejudice to other remedies the District may have, including a Termination for Cause as set forth in Article 14. If there are inadequate funds remaining the Project balance or in the Retention Escrow to address at least 150% of the costs set forth in the Article 2.2 notice, the District may copy the Surety on the written notice of Partial Default. If a notice to the Surety is provided, except in the cases of emergency or critical path delay, the Surety has the option to take over and complete the Work described in the written notice if Surety personally delivers notice to District that it intends to perform such work. In the case where written notice has been provided, the District shall allow Surety seven (7) days to perform the Work.

2.2.1 Service of Notice of Partial Default with Right to Cure

A written notice of Partial Default and right to cure under Article 2.2 ("Article 2.2 Notice" or "Notice of Partial Default") shall be served by e-mail (with a copy provided by regular mail) to the e-mail address provided on the Bid submitted and copied to the Project Superintendent.

2.2.2 Shortened Time for Partial Default in the Case of Emergencies.

In an Emergency situation, the District may correct any of the deficiencies described in Article 2.2 without prejudice to other remedies by providing service of written notice of Emergency requiring a shortened time for Partial Default specifying the time given to cure, if any.

2.2.3 Shortened Time for Partial Default in the Case of Critical Path Delay

In the case of critical path delay, the District may correct any of the deficiencies described in Article 2.2 without prejudice to other remedies providing service of written notice of critical path delay to the Contractor with a specific description of the critical path delay items noting the line item or area of Work that is on the critical path and prescribe the length of shortened time to cure, if any.

2.2.4 Written Notice of Partial Default to be Deducted by Deductive Change Order

The District shall have the right to determine the reasonable value of the Article 2.2 Partial Default Work, or if there is an actual value for the Work, shall use that value and issue a Deductive Change Orders under Article 7.7.4

ARTICLE 3
THE CONTRACTOR

3.1 SUPERVISION AND CONSTRUCTION PROCEDURES

3.1.1 Contractor

The Contractor shall continually supervise and direct the Work using the Contractor's best skill and attention. The Contractor shall be solely responsible for and have control over construction means, methods, techniques, sequences, procedures; and shall coordinate all portions of the Work under the Contract, unless the Contract Documents give other specific instructions concerning these matters. The Contractor shall not perform the Work without utilizing the Contract Documents or, where required, approved Submittals, Shop Drawings, or samples for any such portion of the Work. If any of the Work is performed by contractors retained directly by the District, Contractor shall be responsible for the coordination and sequencing of the work of those other contractors so as to avoid any impact on the Project Schedule pursuant to the requirements of Article 6 and Article 8. Specific duties of the Contractor shall include those set out in Section 43 of Title 21 of the California Code of Regulations and Section 4-343 of Title 24 of the California Code of Regulations. These duties include, but are not limited to the following:

3.1.1.1 *Responsibilities*. It is the duty of the Contractor to complete the Work covered by his or her Contract in accordance with the approved Plans and Specifications. The Contractor in no way is relieved of any responsibility by the activities of the Architect, Engineer, Inspector or DSA in the performance of their duties.

3.1.1.2 Performance of the Work. The Contractor shall carefully study the approved Plans and Specifications and shall plan its schedule of operations well ahead of time. If at any time it is discovered that work is being done which is not in accordance with the approved Plans and Specifications, the Contractor shall correct the Work immediately.

3.1.2 Contractor Responsibility to Study the Plans and Specifications

All inconsistencies or timing or sequences which appear to be in error in the Plans and Specifications shall promptly be called to the attention of the Architect or, Engineer, for interpretation or correction. Local conditions which may affect the structure shall be brought to the Architect's attention at once. In no case, shall the instruction of the Architect be construed to cause work to be done which is not in conformity with the approved Plans, Specifications, change orders, construction change documents, and as required by law. (See Title 24, Section 4-343)

3.1.3 All Work Under the Direction of Inspector

Pursuant to Title 24 requirements, the Contractor shall not carry on Work except with the knowledge of the Inspector. (See Title 24 generally)

3.1.4 Contractor to Establish Timing and Protocol with Inspector

Contractor shall establish a protocol for requesting inspection with Inspector so as to not delay the Work and provide adequate time for the Inspector to perform inspection. If such a protocol is not established ahead of time, Inspector may utilize the time criteria set by Title 24 of 48 hours in advance of submitting form DSA 156 for each new area. DSA requirements under PR 13-01 specifically gives the

Special Inspector fourteen (14) days to post to the DSA website. Contractor is responsible for delays and for failure to plan.

For some Projects, there may be a need to incrementally install certain assemblies. It is up to Contractor to identify areas and assemblies that may be constructed incrementally. Contractor must identify and establish incremental areas of construction and establish protocols with Inspector for DSA 152 approvals so they may be presented to DSA. (See PR-13 item 1.17 for further discussion)

3.1.5 Verified Reports

The Contractor shall make and submit to the office from time to time, verified reports as required in Title 24 Section 4-366. As part of the Close-Out of the Project (see Article 9.9), Contractor shall be required to execute a Form 6-C as required under Title 24 Sections 4-343.

Contractor shall fully comply with any and all reporting requirements of Education Code sections 17315, et seq., in the manner prescribed by Title 24, as applicable.

3.1.6 Contractor Responsibility

The Contractor shall be responsible to the District for acts and omissions of the Contractor's employees, Subcontractors, material and equipment suppliers, and their agents, employees, invitees, and other persons performing portions of the Work under direct or indirect contract with the Contractor or any of its Subcontractors.

3.1.7 Obligations not Changed by Architect's Actions

The Contractor shall not be relieved of obligations to perform the Work in accordance with the Contract Documents either by activities or duties of the Architect in the Architect's administration of the Contract or by tests, inspections, or approvals required or performed by persons other than the Contractor.

3.1.8 Acceptance/Approval of Work

The Contractor shall be responsible to determine when any completed portions of the Work already performed under this Contract or provided pursuant to Article 6 are suitable to receive subsequent Work thereon.

3.2 SUPERVISION

3.2.1 Full Time Supervision

Unless personally present on the Project site where the Work is being performed, the Contractor shall keep on the Work at all times during its progress a competent, English speaking construction Superintendent satisfactory to the District. The Superintendent shall be present on a full-time basis, shall be dedicated exclusively to the Project and shall not share superintendency duties with another project or job. The Superintendent shall not be replaced except with written consent of the District. The Superintendent shall represent the Contractor in its absence and shall be fully authorized to receive and fulfill any instruction from the Architect, the Inspector, the District or any other District Representative (including CM in the cases where the District has a CM representative). All Requests for Information shall be originated by the Superintendent and responses thereto shall be given to the Superintendent. No Work

shall begin on any day by any Subcontractor or other person on the Project site until the Superintendent has arrived, or shall any Work continue during the day after the Superintendent has departed from the Project site. The Superintendent shall have authority to bind Contractor through the Superintendent's acts. The Superintendent shall represent the Contractor, and communications given to the Superintendent shall be binding on the Contractor. Before commencing the Work, Contractor shall give written notice to District (and CM representative) and Architect of the name and a Statement of Qualifications of such superintendent. Superintendent shall not be changed except with written consent of District, unless a superintendent proves to be unsatisfactory to Contractor and ceases to be in its employ, in which case, Contractor shall notify District and Architect in writing. Contractor shall provide a replacement superintendent approved by the District prior to performing additional work.

3.2.2 Staff

Notwithstanding other requirements of the Contract Documents, the Contractor and each Subcontractor shall: (1) furnish a competent and adequate staff as necessary for the proper administration, coordination, supervision, and superintendence of its portion of the Work; (2) organize the procurement of all materials and equipment so that the materials and equipment will be available at the time they are needed for the Work; and (3) keep an adequate force of skilled and fit workers on the job to complete the Work in accordance with all requirements of the Contract Documents.

3.2.3 Right to Remove

District shall have the right, but not the obligation, to require the removal from the Project of any superintendent, staff member, agent, or employee of any Contractor, Subcontractor, material or equipment supplier.

3.3 LABOR AND MATERIALS

3.3.1 Contractor to Provide

Unless otherwise provided in the Contract Documents, the Contractor shall provide and pay for labor, material, equipment, tools, construction equipment and machinery, water, heat, air conditioning, utilities, transportation, and other facilities, services and permits necessary for proper execution and completion of the Work whether temporary or permanent and whether or not incorporated or to be incorporated in the Work.

3.3.2 Quality

Unless otherwise specified, all materials and equipment to be permanently installed in the Project shall be new and shall be of the highest quality or as specifically stated in the Contract Documents. The Contractor shall, if requested, furnish satisfactory evidence as to kind and quality of all materials and equipment within ten (10) days of a written request by the District, including furnishing the District with bona fide copies of invoices for materials or services provided on the Project. All labor shall be performed by workers skilled in their respective trades, and shall be of the same or higher quality as with the standards of other school construction.

3.3.3 Replacement

Any work, materials, or equipment, which do not conform to these requirements or the standards set forth in the Contract Documents, may be disapproved by the District, in which case, they shall be removed and replaced by the Contractor at no additional cost or extension of time to the District.

3.3.4 Discipline

The Contractor shall enforce strict discipline and good order among the Contractor's and Subcontractor's employees, and other persons carrying out the Contract. The Contractor shall not permit employment of unfit persons or persons not skilled in tasks assigned to them. As used in this subsection, "unfit" includes any person who the District concludes is improperly skilled for the task assigned to that person, who fails to comply with the requirements of this article, or who creates safety hazards which jeopardize other persons and/or property.

3.3.5 Fingerprinting (Applicable at the time Project is Occupied and on all Projects where Workers will come in Contact with Pupils, such as Modernization Projects)

If applicable, Contractor shall comply with the applicable provisions of Education Code section 45125.1 in a method as determined by the District. Pursuant to Education Code section 45125.1, Contractor shall either conduct criminal background checks of all employees of Contractor assigned to the Project site, and shall certify that no employees who have been convicted of or who have an arrest pending final adjudication for any serious or violent felonies, as specified in Education Code section 45125.1, will have contact with pupils, by utilizing the Contractor Certification Regarding Background Checks and the corresponding Attachment "A" as found in the Contract Documents or shall be separated by a physical barrier from students.

If it is determined that Contractor must provide certification of employees, as part of such certification, Contractor must provide the District with a list of all employees providing services pursuant to this Agreement, and designate which sites such employees will be assigned. In performing the services set forth in this Agreement, Contractor shall not utilize any employees who are not included on the above-referenced list.

Contractor's failure to comply with this law shall be considered a material breach of this Agreement upon where this Agreement may be terminated, at District's sole discretion, without any further compensation to Contractor.

In the case of new construction Projects where there are no students, if the Project Schedule provides for Beneficial Occupancy or portions of the Project or if the Project should be delayed, then Contractor, at no additional costs, shall meet the requirements of either fingerprinting or providing a physical barrier as required by the District.

3.3.6 Noise, Drugs, Tobacco, and Alcohol

Contractor shall take all steps necessary to insure that employees of Contractor or any of its Subcontractors' employees do not use, consume, or work under the influence of any alcohol, tobacco or illegal drugs while on the Project. Contractor shall further prevent any of its employees or its Subcontractor employees from playing any recorded music devices or radios or wearing any radio headphone devices for entertainment while working on the Project. Likewise, Contractor shall prevent its employees or Subcontractor's employees from bringing any animal onto the Project. Contractors shall not violate any written school policies.

3.3.7 Delivery of Material

Contractor shall place orders for materials or equipment so that the Work may be completed in accordance with the Construction schedule for the Work as set forth in Article 8 of this Agreement. Contractor shall, upon demand from the Architect, furnish to the Architect documentary evidence including, but not limited to purchase orders, invoices, bills of materials, work orders and bills of lading, showing that orders have been placed. Contractor shall have a system to receive materials and to ensure that the proper materials are being delivered, including in the case of critical materials to the Project, checking the delivery against Shop Drawings and ensuring that the materials meet the requirements of not only the Plans and Specifications, but also the approved Shop Drawings and Submittals and in conformance with Contractor's plan for delivery of materials (including but not limited to Contractor's representations in the Schedules for the Project and Contractor's equipment and materials schedule under Article 3.7.2.2). Contractor shall be responsible for all costs of accepting non-conforming materials delivered to the Project given Contractor's responsibilities and system for acceptance of deliveries. Contractor shall notify Inspector and District Representative (including CM) as early as possible, in writing, of the delivery of materials for the Project. The deliveries shall include documentation identifying the shipment sufficiently so that the Inspector, Architect or District Representative (including CM) may review the materials that are received. Under no circumstances shall materials be delivered to the Project site that are meant for another Project.

3.3.8 Liens and Other Security Interests of Subcontractors and Material Suppliers

No material, supplies, or equipment for the Work shall be purchased subject to any chattel mortgage or under a conditional sale or other agreement by which an interest therein or in any part thereof is retained by seller or supplier. Contractor warrants good title to all material, supplies, and equipment installed or incorporated in Work and agrees upon completion of all Work to deliver premises, together with all improvements and appurtenances constructed or placed thereon by it, to District free from any claims, security interests, liens, or charges. Contractor further agrees that neither it nor any person, firm, or corporation furnishing any materials or labor for any Work covered by this Contract shall have any right to place a lien upon the premises or any improvement or appurtenance thereof, except that Contractor may install metering devices or other equipment of a utility company or political subdivision, title to which is commonly retained by the utility company or political subdivision. In event of installation of any such metering device or equipment, Contractor shall advise District as to its owner within five (5) days of such installation in writing, prior to making the installation.

Contractor agrees to indemnify, defend and hold the District harmless from any liens, stop notices, or assertion of security interests, including judgments and levies. If after written notice Contractor fails to address the lien, stop notice, or other security interest, the District may proceed to address the lien, stop notice or claim and seek reimbursement from Contractor.

3.3.9 Title to Materials

The title to new materials or equipment for the Work of this Contract shall remain with Contractor until incorporated in the Work of this Contract until final acceptance of the Project; no part of said materials shall be removed from its place of storage, and Contractor shall keep an accurate inventory of all said materials and equipment in a manner satisfactory to the District or its authorized representative. Responsibility for materials remains with Contractor and Contractor shall replace materials in case of loss. District similarly may pay for materials stored off site, but Contractor shall remain responsible for the materials that are stored off site.

3.3.10 Assemblies

For all material and equipment specified or indicated in the Drawings, the Contractor shall provide all labor, materials, equipment, and services necessary, (including engineering as specifically required with Shop Drawings or Deferred Approvals) for complete assemblies and complete working systems. Incidental items not indicated on the Drawings, nor mentioned in the Specifications, that can legitimately and reasonably be inferred to belong to the Work described, or be necessary in good practice to provide a complete assembly or system, shall be furnished as though itemized in the Contract Documents in every detail. In all instances, material and equipment shall be installed in strict accordance with each manufacturer's most recent published recommendations and Specifications.

3.3.11 Noise Control

The Contractor shall be responsible for the installation of noise reducing devices on construction equipment. Contractor shall comply with the requirements of the city and county having jurisdiction with regard to noise ordinances governing construction sites and activities. Construction equipment noise is subject to the control of the Environmental Protection Agency's Noise Control Program (Part 204 of Title 40, Code of Federal Regulations). If school is in session at any point during the progress of the Project, and, in the District's reasonable discretion, the noise from such Work disrupts or disturbs the students or faculty or the normal operation of the school, at the District's request, the Contractor shall schedule the performance of all such Work around normal school hours or make other arrangements so that the Work does not cause such disruption or disturbance. There are specific periods of testing at operational schools and it is critical that Contractor control noise during periods of testing. In no event shall Contractor have a right to receive additional compensation or an extension to the Contract time as a result of any such rescheduling or the making of such arrangements. These controls shall be implemented during site preparation and construction. All noise related issues, including school operations, and noise during testing should be detailed in the Schedule provided pursuant to Article 8.

3.3.12 Prevention and Reporting of Workplace Violence

3.3.12.1 *Statutory Requirements*. Each employer required by Labor Code Section 6401.7 to have in effect an Injury and Illness Prevention Plan ("IIPP") must also establish, implement and maintain a written Workplace Violence Prevention Plan in accordance with Labor Code Section 6401.9 ("WVPP"). The WVPP may be incorporated as a stand-alone section of the IIPP, or may be a separate document. As described in Subdivision (b)(2) of Section 6401.9, certain employers, employees, and places of employment may be exempt from the WVPP requirements. However, in accordance with Subdivision (b)(3) of Section 6401.9, and notwithstanding an applicable exemption, the California Department of Industrial Relations, Division of Occupational Safety and Health ("Cal OSHA") may issue special orders requiring compliance with WVPP requirements.

3.3.12.2 *Project WVPP*. Not later than five (5) days following receipt of the Notice of Award, and as a condition precedent to commencing any work or services on or at the Project Site, the Contractor shall provide to the District: (i) a complete and accurate copy of the Contractor's WVPP applicable to the Project ("Project WVPP"); and (ii) the name, position, and telephone number of each person having responsibility for implementing the Project WVPP and receiving reports of workplace violence, if and to the extent that information is not conspicuously specified in the Project WVPP. Notwithstanding the District's receipt of the Project WVPP and related information, and subject to coordination requirements specified in Section 3.3.12.3 herein, the Contractor shall at all times retain sole responsibility for: (i) implementing and maintaining the Project WVPP; and (ii) ensuring compliance with Project WVPP requirements by each subcontractor, consultant, supplier, and other entity under contract

with or otherwise subject to the Contractor's control that, for any length of time, will be present on or at the Project Site (each an "Other Employer").

3.3.12.3 *Coordination Requirements*. The Contractor shall implement procedures to effectively coordinate the Project WVPP with the District and all Other Employers, to ensure that they and their employees understand their respective roles in connection with the Project WVPP. Such procedures shall ensure that: (i) all employees are trained in regard to workplace violence prevention; (ii) each workplace violence incident involving any employee is reported, investigated, and recorded; and (iii) if any employee experiences a workplace violence incident, the Contractor shall record the information in a violent incident log and shall provide a copy of that log to the District upon request. In addition, and without limiting the foregoing, the Contractor, during weekly safety meetings conducted at the Project Site, shall reiterate the requirements of the Project WVPP and the procedures for reporting and logging workplace violent incidents, and for otherwise complying with requirements of the Project WVPP. The Contractor shall require that all employees who will be on or at the Project Site in connection with the Project (whether employed by the Contractor or any Other Employer) attend (and sign an attendance sheet for) the weekly safety meetings. If attendance at any weekly safety meeting reasonably is not possible with respect to any particular Other Employer (e.g., a supplier whose employee(s) will only temporarily be at the Project Site), the Contractor shall provide and describe directly to each such Other Employer and its applicable employee(s) the requirements of the Project WVPP and the procedures for reporting and logging workplace violent incidents, and for otherwise complying with requirements of the Project WVPP.

3.3.12.4 *Compliance and Indemnification*. In connection with the Project, and without limiting anything else in the Contract, the Contractor shall: (i) fully comply with all applicable requirements of the Project WVPP, Labor Code Section 6401.7, and Labor Code Section 6401.9 (collectively, the "IIPP and WVPP Requirements"); and (ii) ensure that all Other Employers fully comply with all applicable IIPP and WVPP Requirements. With respect to any and each failure by the Contractor or any of the Other Employers to full comply with all appliable IIPP and WVPP Requirements, and in accordance with Section 3.3.12 of these General Conditions, the Contractor shall indemnify, defend, and hold-harmless the District, the District's governing board and each individual member thereof, and the District's other officers, employees, agents and representatives, and each of them.

3.3.13 California Air Resources Board ("CARB")

3.3.13.1 Contractor shall comply, and shall ensure all subcontractors comply, with all applicable requirements of the most current version of the regulations imposed by the California Air Resources Board ("CARB") including, without limitation, all applicable terms of Title 13, California Code of Regulations Division 3, Chapter 9 and all pending amendments ("Fleet Regulation").

3.3.13.2 Throughout the Project, and for three (3) years thereafter, Contractor shall make available for inspection and copying any and all documents or information associated with Contractor's and its subcontractors' fleets including, without limitation, the Certificates of Reported Compliance ("CRCs"), fuel/refueling records, maintenance records, emissions records, and any other information the Contractor is required to produce, keep or maintain pursuant to the Fleet Regulation upon two (2) calendar days' notice from the District.

3.3.13.3 Contractor shall be solely liable for any and all costs associated with compliance with the Fleet Regulation as well as for any and all penalties, fines, damages, or costs associated with any and all violations, or failures to comply with the Fleet Regulation. Contractor shall defend, indemnify and hold harmless the District, its officials, officers, employees and agents free and harmless

from any claims, liabilities, costs, penalties or interest arising out of any failure or alleged failure to comply with the Fleet Regulation.

3.4 WARRANTY

The Contractor warrants to the District and Architect that material and equipment furnished under the Contract will be of the highest quality and new unless otherwise required or permitted by the Contract Documents, that the Work will be free from defects not inherent in the quality required or permitted, and that the Work will conform with the requirements of the Contract Documents. Work not conforming to these requirements, including substitutions not properly approved and authorized, may be considered defective. Contractor's warranty to District includes, but is not limited to, the following representations:

3.4.1 In addition to any other warranties provided elsewhere, Contractor shall, and hereby does, warrant all Work after the date of Notice of Completion of Work by District and shall repair or replace any or all such Work, together with any other Work, which may be displaced in so doing that may prove defective in workmanship or materials within a one (1) year period from date of Final Completion which shall be no later than the final date of Punch List as noted at Article 9.11) without expense whatsoever to District, ordinary wear and tear, unusual abuse or neglect excepted. District will give notice of observed defects with reasonable promptness. Contractor shall notify District upon completion of repairs.

3.4.2 In the event of failure of Contractor to comply with above mentioned conditions within one week after being notified in writing, District is hereby authorized to proceed to have defects repaired and made good at expense of Contractor who hereby agrees to pay costs and charges therefore immediately on demand.

3.4.3 If, in the opinion of the District, defective Work creates a dangerous condition or requires immediate correction or attention to prevent further loss to the District, the District will attempt to give the notice required by this Article. If the Contractor cannot be contacted or does not comply with the District's requirements for correction within a reasonable time as determined by the District, the District may, notwithstanding the provisions of this article, proceed to make such correction or attention which shall be charged against Contractor. Such action by the District will not relieve the Contractor of the guarantee provided in this Article or elsewhere in this Contract.

3.4.4 This Article does not in any way limit the guarantee on any items for which a longer warranty is specified or on any items for which a manufacturer gives a guarantee for a longer period. Contractor shall furnish District all appropriate guarantee or warranty certificates upon completion of the project.

3.5 TAXES

Contractor will pay all applicable Federal, State, and local taxes on all materials, labor, or services furnished by it, and all taxes arising out of its operations under the Contract Documents. District is exempt from Federal Excise Tax, and a Certificate of Exemption shall be provided upon request.

3.6 PERMITS, FEES AND NOTICES

3.6.1 Payment

The Contractor shall secure and pay for all permits and governmental fees, licenses, and inspections necessary for proper execution and completion of the Work which are necessary after execution

of the Contract and are legally required by any authority having jurisdiction over the Project, except those required by the Division of the State Architect (DSA). District shall be responsible for all testing and inspection as required by the DSA on-site or within the distance limitations set forth in Article 13.5.2, unless a different mileage range is specified in the Supplemental Conditions.

3.6.1.1 *DSA Fees*. DSA policy is to charge CCD review fees for processing and approval of changes in the Plans and Specifications through the Construction Change Document process. Contractor is specifically directed to the current DSA IR A-30 which provides fee structure and charges that will be incurred for proceeding with respect to the CCD process, a process that must be followed for each change in the Plans and Specifications.

3.6.2 Compliance

The Contractor shall comply with and give notices required by any law, ordinance, rule, regulation, and lawful order of public authorities bearing on performance of the Work. Specifically, the Division of State Architect provides State oversight of the Project and enforcement of Title 24 rules and regulations. Contractor is directed to the DSA website. There will be local governmental oversight from City, County or both. Finally, Regional Water Quality Control Board, State Fire Marshall, local fire marshal, Department of Industrial Relations, Department of Labor Standards Enforcement, and Air Quality Management District (Local and State) are some of the agencies that provide oversight and may require specific permits, fees, or provide oversight over the Project. Contractor represents understanding and specialized knowledge of the rules governing school districts and Contractor shall maintain compliance over the applicable rules and will file all documents required in order to ensure compliance with State, local, and other rules that apply to the Project.

3.6.3 Responsibility

The Contractor shall perform all Work in conformance with every law, statute, ordinance, building code, rule, regulation or order. The Contractor shall assume full responsibility for such Work and shall bear the attributable cost of correction or project delay.

Pursuant to Title 24 Section 4-343(b):

> "Contractor shall carefully study the approved Plans and Specifications and shall plan a schedule of operations well ahead of time..... All inconsistencies or items which appear to be in error in the Plans and Specifications shall be promptly called to the attention of the architect or registered engineer, through the inspector, for interpretation or correction."

To help Contractor plan its operations, Contractor is directed to study the current version of the DSA 152 Inspection Card Manual identifying the exact steps the Inspector is to follow in the review and sign off process for the DSA 152. The DSA 152 Inspection Card Manual provides specific detail as to the order of operations, review items and compliance items beyond the Specifications and Plans which are reviewed for DSA compliance. The most current version of this manual is located on DSA's website.

Contractor is also specifically directed to the time periods for posting of Special Inspection Reports and Inspector Notifications under DSA PR 13-01 since the timing of Inspection is not a Governmental Entity related delay.

3.7 SUBMITTALS REQUIRED AT THE COMMENCEMENT OF THE PROJECT

3.7.1 Requirements Within Ten (10) Calendar Days

Within ten (10) calendar days after Notice to Proceed, Contract shall submit the following:

3.7.1.1 Detailed Schedule of Values (See Article 9.2)

3.7.1.2 Submittal Listing and Schedule for Submittals

3.7.1.3 Critical Path Baseline Schedule (See Article 8)

3.7.2 Requirements Within Thirty-Five (35) Calendar Days

Within thirty-five (35) calendar days after Notice to Proceed, Contractor shall submit the following:

3.7.2.1 *All Submittals for the Project* except those specifically agreed upon by District and Architect, in writing, and shall be specifically incorporated into the Submittal section of the Schedule so as to not delay the Work. The agreement to allow a later Submittal does not mean that Article 3.3.7 is waived. Contractor shall order materials and ensure prices are honored and secured for the Project.

a. Structural Steel may be included as a later Submittal than 35 days if Structural Steel is a significant portion of the Work, at least one or some of the Project is a structural steel structural system, or as specifically agreed upon by the Architect or District.

b. It is specifically agreed that submissions of structural steel Submittals shall not be piecemeal (unless some portion is requested separately by the District or Architect), shall provide complete designs, shall be stamped by the structural steel Subcontractor, Contractor, and structural steel Subcontractor's structural engineer at time of submission and as further addressed in Article 3.9.

c. In no case shall the submission of structural steel Drawings delay the critical path for the schedule. If a Milestone is provided for submission of complete structural steel Shop Drawings then the date shall be no later than as set forth in the Milestone

3.7.2.2 *Exceptions to Submittal Within Thirty-Five (35) Days by Written Agreement*. A written request detailing the specific reasons for a submission later than 35 days due to complexity of design or non-critical path status of the Submittal shall be submitted at the time the Baseline Schedule is submitted. The Baseline Schedule shall not include a delayed Submittal until written agreement is provided. In addition to the request for providing a Submittal after the thirty-five (35) day period, a copy of the Contract with the Subcontractor who shall be performing the Submittal, a written statement from the Subcontractor verifying that work has commenced on the Submittal and providing Subcontractor's own schedule of Milestones and completion dates, and a corresponding Submittal designation in the Schedule as required under Article 8. Approval of a delayed Submittal shall not result in any increase in the Contract Price or result in an extension of time for the completion of the Project.

3.7.2.3 *Piecemeal Submissions of Submittals*. Piecemeal Submittals mean providing portions of Shop Drawings or Submittals as they are being completed. The submission of piecemeal Submittals results in the appearance of a submission when there is inadequate information for the Architect or Engineer to adequately review a submission. Piecemeal differs from submission of complete buildings or phases of buildings or complete assemblies. The Architect may agree to allow submission of single buildings or areas as long as the Submittals are complete. .

3.8 DOCUMENTS, SAMPLES, AND COMPUTER AT THE SITE

The Contractor shall maintain at the Site for the District one current copy of the California Building Code, Titles 19 and 24 of the California Code of Regulations, any other document required by DSA, and one record copy of the Drawings, Specifications, ***Bid Clarifications*** ~~Addenda~~, Change Orders, and other Modifications, in good order and marked currently to record changes and selections made during construction. In addition, the Contractor shall maintain at the Site approved Shop Drawings, Product Data, Samples, and similar required Submittals. These documents shall be available to the Architect and shall be delivered to the Architect for delivery to the District upon completion of the Work.

Contractor shall have an operational computer with internet access so Contractor can review and post documents as required for the Project, including but not limited to the filing and posting of DSA required documents for the Project.

Contractor shall be prepared to review documents posted to the DSA Project website.

3.9 SUBMITTALS INCLUDING SHOP DRAWINGS, PRODUCT DATA, AND SAMPLES

3.9.1 Definitions

3.9.1.1 *Deferred Approvals*. Approval of certain aspects of the construction may be deferred until the construction Contract has been awarded. To facilitate the design process, DSA grants Deferred Approval to the design and detailing of certain elements of the Project at the request of the Architect or Engineer of Record. Design elements that may be deferred may include, but are not limited to access floors, bleachers, elevator guide rails and related elevator systems, exterior wall systems - precast concrete, glass fiber reinforced concrete, etc., skylights, window wall systems, storefronts, stage rigging, and other systems as noted in the Contract Documents. (Also see Article 1.2.2.2 and 3.9.3)

3.9.1.2 *Shop Drawings.* The term "Shop Drawings" as used herein means Drawings, diagrams, equipment or product schedules, and other data, which are prepared by Contractor, Subcontractors, manufacturers, suppliers, or distributors illustrating some portion of the Work, and includes: illustrations; fabrication, erection, layout and setting Drawings; manufacturer's standard Drawings; schedules; descriptive literature, instructions, catalogs, and brochures; performance and test data including charts; wiring and control diagrams; and all other Drawings and descriptive data pertaining to materials, equipment, piping, duct and conduit systems, and methods of construction as may be required to show that the materials, equipment, or systems and their position conform to the requirements of the Contract Documents.

3.9.1.3 *Manufactured* applies to standard units usually mass-produced, and "Fabricated" means items specifically assembled or made out of selected materials to meet individual design requirements. Shop Drawings shall: establish the actual detail of all manufactured or Fabricated items, indicate proper relation to adjoining work, amplify design details of mechanical and electrical

systems and equipment in proper relation to physical spaces in the structure, and incorporate minor changes of design or construction to suit actual conditions.

3.9.1.4 *Submittals* is a term used interchangeably and sometimes refers to Shop Drawings, Product Data, and samples since all Subcontractor submissions are tracked in a Submittal Log and may include any of the noted items. However, generally, a Submittal is a manufacturer's product information and Product Data including description, characteristics, size, physical characteristics, and requirements to prepare the jobsite for receiving of the particular manufactured item.

3.9.1.5 *Samples*. The term "samples" as used herein are physical examples furnished by Contractor to illustrate materials, equipment, or quality and includes natural materials, Fabricated items, equipment, devices, appliances, or parts thereof as called for in the Specifications, and any other samples as may be required by the Architect to determine whether the kind, quality, construction, finish, color, and other characteristics of the materials, etc., proposed by the Contractor conform to the required characteristics of the various parts of the Work. All Work shall be in accordance with the approved samples.

3.9.2 Shop Drawings.

3.9.2.1 *When Shop Drawings Are Required.* Shop Drawings are required for prefabricated components and for installation and coordination of these prefabricated components into the Project. In addition, Shop Drawings, are prepared to address the actual size and installation of components from various Subcontractors and provides an opportunity for the Contractor to coordinate and address conflicts between the subcontracting trades. In some cases, each Subcontractor or trade will provide Shop Drawings in a BIM format or other format as agreed by District.

3.9.2.2 *Purpose for Shop Drawings.* Shop Drawings are the Contractor's manufacturer, Subcontractor, supplier, vendor or the Contractor's detailed drawings showing particularized method for assembly, specifics to a manufacturer, manufacturer component installation requirements, specifics as to a manufactured item, alterations to a manufactured, a custom created item, or drawn version of more detailed information expanding on the Architect's design shown in the Contact Documents. The Shop Drawings address the appearance, performance, size, weight, characteristics and prescriptive descriptions associated with the Contractor or Contractor's Subcontractor's plan for installation or assembly based on the design in the Specifications and Contract Documents. The Shop Drawing often is more detailed than the information shown in the Contract Documents to give the Architect and Engineer the opportunity to review the fabricator's version of the product (along with particulars specific to that particular product), prior to fabrication. References to the Contract Documents, Construction Documents, Drawings, Plans, and Specifications assist the Architect and Engineer in their review of the Shop Drawings. Attachment of manufacturer's material Specifications, "catalog cut sheets," and other manufacturer's information may be provided to accompany Shop Drawings. Because Shop Drawings facilitate the Architect's and Engineer's approval of the system, they should be as clear and complete as possible so they may be reviewed by Architect or Engineer for the Project.

3.9.2.3 *Shop Drawing Requirements.* The Contractor shall obtain and submit with Shop Drawings all seismic and other calculations and all Product Data from equipment manufacturers. "Product Data" as used herein are illustrations, standard schedules, performance charts, instructions, brochures, diagrams, and other information furnished by the Contractor to illustrate a material, product, or system for some portion of the Work.

3.9.2.4 *Not a Reproduction of Architectural or Engineering Drawings.* The Shop Drawings are not a reproduction of the architectural or engineering Drawings. Instead, they must show more detail than the Construction Documents and details the fabrication and/or installation of the items to the manufacturer's production crew or Contractor's installation crews.

3.9.2.5 *Shop Drawings Engineering Requirements*: Some Shop Drawings require an engineer stamp to be affixed on the Drawings and calculations. In such cases, a current and valid engineering stamp shall be affixed by a California registered engineer. No out of State engineers shall stamp Shop Drawings. (See DSA IR A-18). In most cases, an engineer means California registered mechanical, structural, electrical or plumbing engineer. California Registered Civil Engineers will not be accepted for structural details unless specifically approved by DSA.

3.9.2.6 *DSA Approvals Required Prior to Work*. No work on a Shop Drawing that requires DSA approval may proceed until DSA approval is received. Contractor has provided DSA approval time and allowed adequate time for corrections in Contractor's Schedule as required pursuant to Article 8.

3.9.2.7 *Shop Drawing Identification.* All Shop Drawings must be properly identified with the name of the Project and dated, and accompanied by a letter of transmittal referring to the name of the Project and to the Specification section number for identification of each item clearly stating in narrative form, as well as "clouding" all qualifications, departures, or deviations from the Contract Documents. Shop Drawings, for each section of the Work shall be numbered consecutively and the numbering system shall be retained throughout all revisions. All Subcontractor submissions shall be made through the Contractor. Each drawing shall have a clear space for the stamps of Architect and Contractor.

3.9.3 Deferred Approvals

Deferred approvals shall be submitted and processed to ensure all DSA and other governmental approvals are secured so as to not delay the Project. There may be additional requirements for Deferred Approvals at Division 1 of the Specifications. All Deferred Approvals shall be prepared by Contractor or Contractor's agent early enough so as to not delay the Project. Contractor is aware that Title 24 California Code of Regulations Section 4-317 have specific requirements for Deferred Approval as to governing agencies and as to the Architect and Engineer for the Project. As a result, any delay associated with the time for approval by applicable agencies or by the Architect or Architect's consultants shall be Contractor's. Contractor is required to comply with inclusion of Deferred Approvals in the Schedule as required under Article 3.9.6*DSA Approvals Required Prior to Work.* No work on a Deferred Approval item may proceed on the components until DSA approval is received. Contractor has provided DSA approval time and allowed adequate time for any DSA revisions in Contractor's Schedule as required pursuant to Article 8.

3.9.4 Submittals and Samples

3.9.4.1 *Information Required With Submittals*: Manufacturer, trade name, model or type number and quantities: Information provided must be of sufficient detail to allow Architect and Engineer to compare the submitted item with the specified products and acceptable products listed, in the Specifications and ***bid clarifications*** ~~addenda~~.

3.9.4.2 *Description of Use and Performance Characteristics*: Information should be furnished describing the normal use and expected performance of the product. The Architect and Contractor review this information to confirm that the product is appropriate for the intended use.

3.9.4.3 *Size and Physical Characteristics:* The size and physical characteristics, such as adjustment capabilities, which is reviewed by both the Contractor and Architect. The Contractor has the most available information for comparing adjoining materials and equipment. The Contractor also needs to know the size and weight of the equipment for lifting and handling considerations.

3.9.4.4 *Finish Characteristics:* The Architect reviews the available finishes and selects the appropriate finish, if the finish was not previously specified in the documents. The Contractor should confirm that finish requirements in the Specifications are being met by the product.

3.9.4.5 *Contractor Responsible for Jobsite Dimensions*: Some material is custom-Fabricated to job conditions, requiring dimensions from the jobsite. These jobsite dimensions are provided by the Contractor as part of the Contractor's responsibilities for the Project and shall be provided prior to release of the product for manufacture. Contractor shall not rely on Architect or Engineers to provide jobsite dimensions.

3.9.4.6 *Full Range of Samples Required (When Specific Items Not Specified).* Except in cases where the exact color and type of item is specified since the District is utilizing items Standardized or pre-selected by District, the full range of color, graining, texture, or other characteristics are anticipated for review in finished products, a sufficient number of samples of the specified materials shall be furnished by the Contractor to indicate the full range of characteristics which will be present in the finished products. Products delivered or erected without Submittal and approval without providing a full range of samples shall be subject to rejection. Except for range samples, and unless otherwise called for in the various sections of the Specifications or Specification Section 1, samples shall be submitted in duplicate.

3.9.4.7 *Labeling of Samples.* All samples shall be marked, tagged, or otherwise properly identified with the name of the submitting party, the name of the Project, the purpose for which the samples are submitted and the date.

3.9.4.8 *Transmittal letter.* All samples shall be accompanied by a letter of transmittal containing similar information, together with the Specification section number.

3.9.4.9 *Labels and Instructions.* All samples of materials shall be supplied with the manufacturer's descriptive labels and application instructions. Each tag or sticker shall have clear space for the review stamps of Contractor and Architect.

3.9.4.10 *Architect's Review.* The Architect will review and, if appropriate, approve submissions and will return them to the Contractor with the Architect's stamp and signature applied thereto, indicating the timing for review and appropriate action in compliance with the Architect's (or District's) standard procedures. In the cases where a CM is hired by the District, CM may be the party that receives and performance logging and initial processing of the Samples. CM may, in some cases, reject samples that are not in conformance with Contract requirements.

3.9.5 Submittal Submission Procedure

3.9.5.1 *Transmittal Letter and Other Requirements.* All Submittals must be properly identified with the name of the Project and dated, and each lot submitted must be accompanied by a letter of transmittal referring to the name of the Project and to the Specification section number for identification of each item clearly stating in narrative form, as well as "clouding" on the submissions, all qualifications, departures, or deviations from the Contract Documents. Shop Drawings, for each section of the Work shall be numbered consecutively and the numbering system shall be retained throughout all

revisions. All Subcontractor submissions shall be made through the Contractor. Each drawing shall have a clear space for the stamps of Architect and Contractor. Refer to Division 1. In the case where a CM is hired on the Project, the CM may be designated to receive the Submittals for the Project, log the Submittals, and in some cases reject Submittals that do not conform to Contract requirements. Submittal Procedures for further information.

3.9.5.2 *Copies Required.* Each Submittal shall include one (1) legible, reproducible (if electronic is available, electronic copies shall also be provided) and five (5) legible prints of each drawing or schedule, table, cut sheet, etc., including fabrication, erection, layout and setting drawings, and such other drawings as required under the various sections of the Specifications, until final acceptance thereof is obtained. Subcontractor shall submit copies, in an amount as requested by the Contractor, of: (1) manufacturers' descriptive data for materials, equipment, and fixtures, including catalog sheets showing dimensions, performance, characteristics, and capacities; (2) wiring diagrams and controls;
(3) schedules; (4) all seismic calculations and other calculations; and (5) other pertinent information as required by the District or Architect. (See also Division 1)

3.9.5.3 *Corrections.* The Contractor shall make all corrections required by Architect, District or CM and shall resubmit, as required by Architect or CM, corrected copies of Shop Drawings or new samples until approved. Contractor shall direct specific attention in writing or on resubmitted Shop Drawings to revisions other than the corrections required by the Architect on previous submissions. Professional services required for more than one (1) re-review of required Submittals of Shop Drawings, Product Data, or samples are subject to charge to the Contractor pursuant to Article 4.5.

3.9.5.4 *Approval Prior to Commencement of Work.* No portion of the Work requiring a Shop Drawing or sample submission or other Submittal shall be commenced until the submission has been reviewed by Contractor and Architect (and CM, if applicable) and approved by Architect (and CM where applicable) unless specifically directed in writing by the Architect. All such portions of the Work shall be in accordance with approved Shop Drawings and samples.

3.9.5.5 *District's Property.* All Submittals, Shop Drawings, computer disks, BIM modeling information, clash checks, schedules, annotated Specifications, samples and other Submittals shall become the District's property upon receipt by the District or Architect.

3.9.6 Schedule Requirements for Submittals

Contractor shall obtain and shall submit all required Submittals (i.e. Shop Drawings, Deferred Approvals, Samples, etc.), in accordance with Contractor's "Schedule for Submission of Shop Drawings and Samples" as required in the scheduling portion of the General Conditions at Articles 8 and the Specifications (as long as the Specifications do not conflict with General Conditions. In the case of conflict, the conflicting provision shall be controlled by the General Conditions and the remaining Specifications sections shall be interpreted as if the general conditions language is inserted) with such promptness as to cause no delay in its own Work or in that of any other contractor or subcontractor but in no event later than thirty five (35) days after the Notice to Proceed is issued except in the specific cases noted as an exception under Article 3.7.2.1. No extensions of time will be granted to Contractor or any Subcontractor because of its failure to have Shop Drawings and samples submitted in accordance with Division 1 and the Schedule. Each Subcontractor shall submit all Shop Drawings, samples, and manufacturer's descriptive data for the review of the District, the Contractor, and the Architect through the Contractor.

3.9.6.1 *Consideration of Schedule.* Contractor has considered lead times, DSA or other agency governmental review times, Architect or Engineer review times, manufacturing seasons, and specific long lead procurement concerns for all submittals for the Project.

3.9.7 General Submittal Requirements

3.9.7.1 *Contractor Submittal Representations and Coordination.* By submitting Shop Drawings, Product Data, samples, etc., the Contractor represents that it has determined and verified all materials, field measurements, catalog numbers, related field construction criteria, and other relevant data in connection with each such submission, and that it has checked, verified, and coordinated the information contained within such Submittals with the requirements of the Work and of the Contract Documents, including the construction schedule.

3.9.7.2 *Contractor Coordination.* Contractor shall stamp, sign, and date each Submittal indicating its representation that the Submittal meets all of the requirements of the Contract Documents and evidence Contractor's review through execution of the following stamp to be placed on each Shop Drawings:

> "[Contractor] has reviewed and approved the field dimensions and the construction criteria, and has also made written notation regarding any information in the Shop Drawings and Submittals that does not conform to the Contract Documents. This Shop Drawing or Submittal has been coordinated with all other Shop Drawings and Submittals received to date by me as Contractor and this duty of coordination has not been delegated to Subcontractors, material suppliers, the Architect, or the Engineers on this Project.
>
> _____
> Signature of Contractor and date

3.9.7.3 *No Deviation from Contract Documents.* The submission of the Shop Drawings, Product Data, samples, etc., shall not deviate from the *requirem*ents of the Contract Documents including detailing and design intent which is specifically outlined in Contract Documents except as specifically authorized by the Architect or through an accepted substitution pursuant to Article 3.10.4. All deviations from the Contract Documents shall be narratively described in a transmittal accompanying the Shop Drawings. However, Shop Drawings shall not be used as a means of requesting a substitution, the procedure for which is defined in Article 3.10.4, "Substitutions."

3.9.7.4 *Contractor Responsibility for Shop Drawings Conformance to Contract Documents*. Review by District and Architect shall not relieve the Contractor or any Subcontractor from its responsibility in preparing and submitting proper Shop Drawings in accordance with the Contract Documents.

3.9.7.5 *Incomplete Submittals.* Any submission, which in Architect's opinion is incomplete, contains errors, or has been checked superficially, will be returned not reviewed by the Architect for resubmission by the Contractor. Refer to Submittal Procedures of the Specifications for additional information. The Contractor shall be responsible for any related delays and shall not be the basis for any Claim.

3.9.7.6 *Shop Drawings and Submittals Shall Not Be Used as a Method to Make a Substitution.* Shop Drawings and Submittals shall not be used as a means of requesting a substitution or to make changes in the Contract Documents. If changes are made to the Contract Documents through the

Shop Drawings, the Architect shall have the right to reject the Submittal. If the Architect does not note the deviation from the approved Plans and Specifications, the Contractor is still responsible for the change and the Architect or the District may require the Shop Drawings be revised to properly reflect the approved Contract Documents. The Architect or District may also require that the Contractor bear all costs under Article 4.5 and consequential damages associated with a CCD to revise Plans and Specifications to accommodate the deviation from approved Plans and Specifications.

3.9.7.7 Extent of Review. In reviewing Shop Drawings, the Architect will not verify dimensions and field conditions. The Architect will review and approve Shop Drawings, Product Data, samples, etc., for aesthetics and for conformance with the design concept of the Work and the information in the Contract Documents. The Architect's review shall neither be construed as a complete check which relieves the Contractor, Subcontractor, manufacturer, fabricator, or supplier from responsibility for any deficiency that may exist or from any departures or deviations from the requirements of the Contract Documents unless the Contractor has, in writing, called the Architect's attention to the deviations at the time of submission. The Architect's review shall not relieve the Contractor or Subcontractors from responsibility for errors of any sort in Shop Drawings or schedules, for proper fitting of the Work, coordination of the differing Subcontractor trades and Shop Drawings and Work which is not indicated on the Shop Drawings at the time of submission of Shop Drawings. Contractor and Subcontractors shall be solely responsible for any quantities which may be shown on the Submittals or Contract Documents.

3.10 SUBSTITUTIONS

3.10.1 Definition

A Substitution is a change in product, material, equipment, or method of construction from those required by the Construction Documents proposed by the Contractor. For this Project, a Substitution is subject to the filing of a Construction Substitution Request Form at the time of bid and meeting the requirements of this Article.

3.10.2 One Product Specified

Unless the Specifications state that no substitution is permitted, whenever the Contract Documents indicate any specific article, device, equipment, product, material, fixture, patented process, form, method, or type of construction or any specific name, make, trade name, or catalog number, with or without the words "or equal," such specification shall be deemed to be used for the purpose of facilitating description of the material, process, or article desired and shall be deemed to be followed by the words "or equal." Subject to the requirements of properly submitting a Substitution Request for as Addressed in Article 3.10.4, the Contractor may, unless otherwise stated, offer any material, process, article, etc., which shall be materially equal or better in every respect to that so indicated or specified ("Specified Item") and will completely accomplish the purpose of the Contract Documents.

3.10.3 Products Specified Which Are Commercially Unavailable

If the Contractor fails to make a request for substitutions for products, prior to the submission of its bid, and such products subsequently become commercially unavailable, the Contractor may request a substitution for such commercially unavailable item. The decision to grant this request is solely at the District's discretion. The written approval of the District, consistent with the procedure for Change Orders, shall be required for the use of a proposed substitute material. The District may condition its approval of the substitution upon the delivery to District of an extended warranty or other assurances of adequate performance of the substitution as well as an equitable deduction in the Contract Price should the

substituted item cost less than the Specified Item. All risks of delay due the approval of a requested substitution by the DSA, or any other governmental agency having jurisdiction, shall be on the requesting party. All additional costs, DSA review costs, all procurement and construction delays, and all costs for review by the Architect or its consultants shall be the responsibility of the Contractor and will be deducted from Contractor's pay request.

3.10.4 Substitution Request Form

Requests for substitutions of products, materials, or processes in place of a Specified Item must be in writing on the District's Substitution Request Form ("Request Form") at the time of submitting bids to the District, except as provided for in Article 3.10.3.

The Request Form must be accompanied by evidence as to whether the proposed substitution:

a. Is equal in quality/service/ability to the Specified Item;

b. Will entail no changes in detail, construction, and scheduling of related work;

c. Will be acceptable in consideration of the required design and artistic effect;

d. Will provide no cost disadvantage to the District;

e. Will require no excessive or more expensive maintenance, including adequacy and availability of replacement parts; and

f. Will required no change of the construction schedule.

In completing the Request Form, the bidder must state, with respect to each requested substitution, whether the bidder will agree to provide the Specified Item in the event that the District denies the bidder's request for such requested substitution. In the event that the bidder has agreed in the Request Form to provide the Specified Item and the District denies the bidder's requested substitution for a Specified Item, the bidder shall provide the Specified Item without any additional cost or charge to the District.

After bids are opened, the apparent lowest bidder shall provide, within five (5) days of opening such bids, any and all Drawing, Specifications, samples, performance data, calculations, and other information, as may be required to assist the Architect, CM and the District in determining whether the proposed substitution is acceptable. The burden of establishing these facts shall be upon the bidder.

After the District's receipt of such evidence by the bidder, the District will make its final decision as to whether the bidder's request for substitution for any Specified Items will be granted. The decision as to whether a proposed request for substitution is equal to a Specified Item shall be at the sole discretion of the District. Any request for substitution that is granted by the District shall be documented and processed though a Change Order. Contractor must submit a complete Submittal of the requested substitution and a Shop Drawing showing configuration, dimensions, and other critical information associated with the substitution that meets the requirements of Article 3.9. The District may condition its approval of any substitution upon delivery to the District of an extended warranty or other assurances of adequate performance of the substitution. Any and all risks of delay due to approval by the DSA or any other governmental agency having jurisdiction shall be on the bidder.

If the Architect and District accept a proposed substitution, the Contractor agrees to pay for all DSA review costs, engineering and design services, including, without limitation, compensation to the Architect and affected engineers for their required time to process such substitution through the Division of the State Architect, if required, and to make all changes and adjustments in materials or the work of all trades directly or indirectly affected by the substituted item or items at no cost to the District.

3.10.5 Substitution Requests After Bid

The District, in its sole discretion, may accept a request for substitution by the Contractor or may request Contractor substitute a specified item. Any substitutions requested after bids are opened shall be subject to the same conditions and requirements set forth in Article 3.10.4 above. If any substitutions, that in the District or Architect's determination, results in a credit to the District, the credit amount shall be agreed upon in writing, otherwise, the request for substitution shall be deemed denied.

3.11 INTEGRATION OF WORK

3.11.1 Scope

The Contractor shall be responsible for cutting, fitting, or patching to complete the Work and to make all parts fit together properly. Contractor shall be responsible for ensuring that all trades are coordinated and scheduled so as to ensure the timely and proper execution of the work. When modifying existing work or installing new Work adjacent to existing work, Contractor shall match, as closely as conditions of Site and materials will allow, the finishes, textures, and colors of the original work, refinishing existing work at no additional cost to District. All cost caused by defective or ill-timed work shall be borne by Contractor. Contractor shall be solely responsible for protecting existing work on adjacent properties and shall obtain all required permits for shoring and excavations near property lines.

3.11.2 Structural Members

New or existing structural members and elements, including reinforcing bars and seismic bracing, shall not be cut, bored, or drilled except by written authority of the Architect. Work done contrary to such authority is at the Contractor's risk and subject to replacement at its own expense without reimbursement under the Contract. Schedule delays resulting from Agency approvals for unauthorized work shall be the Contractor's responsibility.

3.11.3 Subsequent Removal

Permission to patch any areas or items of the Work shall not constitute a waiver of the District's or the Architect's right to require complete removal and replacement of the areas of items of the Work if, in the opinion of the Architect or the District, the patching does not satisfactorily restore quality and appearance of the Work or does not otherwise conform to the Contract Documents.

3.12 CLEANING UP

3.12.1 Contractor's Responsibility to Clean Up

Contractor at all times shall keep premises free from debris such as waste, dust, excess water, storm water runoffs, rubbish, and excess materials and equipment. Contractor shall not leave debris under, in, or about the premises, but shall promptly remove same from the premises and dispose of it in a

lawful manner. Disposal receipts or dump tickets shall be furnished to the Architect within five (5) days of request.

Contractor shall remove rubbish and debris resulting from the Work on a daily basis. Contractor shall maintain the structures and Site in a clean and orderly condition at all times until acceptance of the Project by the District. Contractor shall keep its access driveways and adjacent streets, sidewalks, gutters and drains free of rubbish, debris and excess water by cleaning and removal each day. All concrete, sidewalks, and paths of travel shall be broom cleaned daily.

3.12.2 General Final Clean-Up

Upon completion of Work, Contractor shall employ experience workers or professional cleaners for final cleaning. Contractor shall clean each surface to the condition expected in a normal, commercial, building cleaning and maintenance program including, but not limited to, the performance of the following:

a. Clean interior and exterior of buildings, including fixtures, equipment, walls, floors, ceilings, roofs, window sills and ledges, horizontal projections, and any areas where debris has collected, so surfaces are free from foreign material or discoloration;

b. Clean the Project site. The grounds should be cleared of any Contractor equipment, raked clean of debris and trash removed. Sweep paved areas broom clean;

c. Repair or replace any damaged materials. Replace any chipped or broken glass;

d. Remove any and all stains;

e. Remove labels that aren't permanent labels;

f. Clean and polish all glass, plumbing fixtures, equipment, finish hardware and similar finish surfaces. Remove any glazing compounds;

g. Remove temporary utilities, fencing, barricades, planking, sanitary facilities and similar temporary facilities from Site;

h. Remove temporary film that remains on any hardware, doors or other surfaces; and

i. Seal the bottom and tops of all doors.

3.12.3 Special Clean-Up.

In addition to the general cleaning, the following special cleaning shall be done at the completion of the Work in accordance with the Specifications including, but not limited to:

a. Remove putty stains from glazing, then wash and polish glazing;

b. Remove marks, stains, fingerprints and other soil or dirt from painted, stained or decorated work;

c. Remove temporary protection and clean and polish floors and waxed surfaces;

d. Clean and polish hardware and plumbing trim; remove stains, dust, dirt, plaster and paint;

e. Wipe surfaces of mechanical and electrical equipment;

f. Remove spots, soil, plaster and paint from tile work, and wash tile;

g. Clean all fixtures and equipment, remove excess lubrication, clean light fixtures and lamps, polish metal surfaces;

h. Vacuum-clean carpeted surfaces; and

i. Remove debris from roofs, down spout and drainage system.

3.12.4 Failure to Cleanup

If the Contractor fails to clean up as provided in the Contract Documents, the District may do so, and the cost thereof shall be the responsibility of the Contractor pursuant to Article 2.2 and seek a Deductive Change Order.

3.13 ACCESS TO WORK

The Contractor shall provide the District, the Architect, Engineers and the Inspector of Record, access to the Work in preparation and progress wherever located. Contractor shall provide safe and proper facilities for such access so that District's representatives may perform their functions.

CONTRACTOR IS AWARE THAT THIS CONTRACT MAY BE SPLIT INTO SEVERAL PHASES AS ADDRESSED IN ARTICLE 6.

3.13.1 Special Inspection, Inspections or Tests Out of State, Out of Country or Remote from Project

If Contractor has a Subcontractor or supplier that requires in plant or special inspections or inspections or tests that are out of the country, out of the state, or a distance of more than 200 miles from the Project site, the Special Inspector or Inspector shall be provided access so the special inspection or inspection may occur in the remote location. In some cases, the DSA Inspector may also require access in addition to Special Inspectors and individuals performing tests. Inspections/tests shall occur during normal work hours. (See also Article 4.3.6)

3.14 ROYALTIES AND PATENTS

3.14.1 Payment and Indemnity for Infringement

Contractor shall hold and save the District and its officers, agents, and employees, the Construction Manager, the Architect, and the Architect's consultants harmless from liability of any nature or kind, including cost and expense, for or on account of any patented or unpatented invention, process, article, or appliance manufactured or used in the performance of the Contract, including its use by the District, unless otherwise specifically provided in the Contract Documents, and unless such liability arises

from the sole negligence, or active negligence, or willful misconduct of the District, the Architect, or the Architect's consultants.

3.14.2 Review

The review by the Architect of any method of construction, invention, appliance, process, article, device, or material of any kind shall be for its adequacy for the Work and shall not be an approval for the use by the Contractor in violation of any patent or other rights of any person or entity.

3.15 INDEMNIFICATION

3.15.1 Contractor

See Agreement Form. Contractor shall ensure that its contract with each of its Subcontractors contains provisions requiring the Subcontractors to defend, indemnify and hold harmless the District, Architect, Inspector, the State of California to a minimum level as set forth in this Article and consistent with the indemnity and hold harmless language in the Agreement Form.

3.16 SUBMISSION OF DAILY REPORTS

3.16.1 General

By 10:00 a.m. on the following business day, the Contractor shall submit a Daily Report to the Inspector and copy the Architect for the previous day's Work. If there is a Construction Manager, the original Daily Report is to be provided to the Construction Manager and copies sent to the Architect and the Inspector. Daily Reports shall be prepared on forms approved by the District, together with applicable delivery tickets, listing all labor, materials, and equipment involved for that day. The District reserves the right to note inconsistencies or inaccuracies in the Daily Reports. In such cases, pertinent notes shall be entered by each party to explain points which cannot be resolved that day. Each party shall retain a signed copy of the report. Daily Reports by Subcontractors or others shall be submitted through the Contractor.

3.16.2 Labor

The Daily Report shall show names of workers, classifications, hours worked and hourly rate. The locations where work occurred shall also be identified in the Daily Report. Project superintendent expenses are not allowed.

3.16.3 Materials

The Daily Report required shall describe and list quantities of materials used and unit costs.

3.16.4 Equipment

The Daily Report required shall show type of equipment, size, identification number, and hours of operation, including loading and transportation, if applicable, and hourly/daily cost. Move-on and move-off fees shall be noted.

3.16.5 Other Services and Expenditures

Other services and expenditures shall be described in the Daily Report in detail as the District requires.

3.16.6 Failure to Submit Daily Report

If Contractor does not submit its Daily Report by 10 am the next business day, the Inspector of Record shall prepare a Daily Report addressing each of the above items. The cost for the Inspector's services to prepare the Daily Report shall be addressed through a Deductive Change Order under Article 7.7.4.

3.17 AS-BUILT DRAWINGS AND ANNOTATED SPECIFICATIONS

Throughout the duration of the Project, Contractor shall maintain on a current basis an accurate and complete set of As-Built Drawings (and Annotated Specifications) clearly showing all changes, revisions to Specifications and substitutions during construction, including, without limitation, field changes and the final location of all electrical and mechanical equipment, utility lines, ducts, outlets, structural members, walls, partitions, and other significant features. In case a Specification allows Contractor to elect one of several brands, makes, or types of material or equipment, the annotations shall show which of the allowable items the Contractor has furnished. The Contractor will update the As-Built Drawings and Annotated Specifications as often as necessary to keep them current, but no less often than weekly.

Contractor shall update As-Built Drawings with complete information on an area of Work at or near the time when the Work is being performed and prior to any DSA 152 sign off and prior to any Work being covered.

The As-Built Drawings and Annotated Specifications shall be kept at the Site and available for review and inspection by the District and the Architect. Failure to maintain and update the As-Built Drawings is a basis to withhold Progress Payments pursuant to Article 9.6.

3.17.1 Upon Beneficial Occupancy

Contractor shall obtain and pay for reproducible Plans upon Beneficial Occupancy. Contractor shall deliver Plans to District Representative (Construction Manager if one is hired for the Project).

3.17.2 As-Builts at Completion of Work

Upon completion of the Work and prior to and as a condition precedent to Application for Retention Payment, the Contractor will provide one neatly prepared and complete set of As-Built Drawings and Annotated Specifications to the District. Contractor shall certify the As-Builts as a complete and accurate reflection of the actual construction conditions of the Work by affixing a stamp indicating the Drawings are As-Builts and certifying accuracy on the final set of As-Builts. Failure to deliver a complete As-Built set of Drawings may result in significant withholdings to ensure Work is properly documented. (See Article 9.9.2)

3.17.3 Log of Control and Survey Documentation

Contractor shall complete and maintain an accurate log or all control and survey documentation for the Project as the Work progresses. All reference and control points shall be recorded

on the As-Built Drawings. The basis of elevations shall be one of the established benchmarks that must be maintained on the As-Builts.

3.17.4 Record Coordinates for Key Items

Contractor shall record, by coordinates, all utilities on-site with top of pipe elevations, major grade and alignment changes, rim, grate or top of curb and flow line elevations of all drainage structures and sewer manholes. Contractor shall update record information at or near the time when work is occurring in an area and prior to DSA 152 sign off on any category of Work and prior to covering the Work.

3.17.5 BIM As-Built Drawings

If BIM is utilized for the Project, then an electronic version of such As-Built Drawings and Annotated Specifications will be delivered to District (in an acceptable format to District).

3.18 EQUIPMENT MANUALS

Contractor shall obtain and furnish three (3) complete sets of manuals containing the manufacturers' instructions for maintenance and operation of each item of equipment and apparatus furnished under the Contract Documents and any additional data specifically requested under the various sections of the Specifications for each division of the Work. The manuals shall be arranged in logical, sequential order, labeled, indexed, and placed in three-ring binders. At the completion of its Work, the Contractor shall certify, by endorsement thereon, that each of the manuals is complete, accurate, and covers all of its Work. Prior to submittal of Contractor's Application for Retention Payment, and as a further condition to its approval by the Architect, each Subcontractor shall deliver the manuals, arranged in logical, sequential order, labeled, indexed, endorsed, and placed in three-ring binders, to the Contractor, who shall assemble these manuals for all divisions of the Work, review them for completeness, and submit them to the District through the Architect.

3.19 DIR REGISTRATION

Strict compliance with all DIR registration requirements in accordance with Labor Code sections 1725.5 and 1771.1 is a material obligation of the Contractor and all of its subcontractors (of any tier) under the Contract Documents. The foregoing includes, without limitation, compliance with DIR registration requirements at all times during performance of the Work by the Contractor and all of its subcontractors of any tier. The failure of the Contractor and all subcontractors of any tier to be properly registered with DIR at all times during performance of the Work is a material breach of the Contract and subject to termination for cause.

An affirmative and ongoing obligation of the Contractor under the Contract Documents is the verification that all subcontractors of any tier are at all times during performance of the Work are in full and strict compliance with the DIR registration requirements. The Contractor shall not permit or allow any subcontractor of any tier to perform any Work without the Contractor's verification that all subcontractors are in full and strict compliance with the DIR registration requirements. Any subcontractors of any tier not properly registered with DIR shall be substituted in accordance with Labor Code section 1771.1. Contractor or its subcontractors of any tier shall not be entitled to any additional costs or time arising from or in any way related to compliance with the DIR registration requirements.

ARTICLE 4
ADMINISTRATION OF THE CONTRACT AND CLAIMS

4.1 ARCHITECT

4.1.1 Replacement of Architect

In the case of the termination of the Architect, the District may appoint an Architect or another construction professional or may perform such functions with its own licensed professional personnel. The status of the replacement Architect under the Contract Documents shall be the same as that of the former Architect.

4.2 ARCHITECT'S ADMINISTRATION OF THE CONTRACT

4.2.1 Status

Pursuant to Titles 2 of the California Code of Regulations and as required pursuant to the Field Act, Education Code 17280 et seq., the Architect will provide administration of the Contract Documents and the Work, and will be the District's representative during construction, as well as during the one (1) year period following the commencement of any warranties. The Architect will have authority to act on behalf of the District only to the extent provided in the Contract Documents.

4.2.2 Site Visits

The Architect will visit the Site at intervals necessary in the judgment of the Architect to become generally familiar with the progress and quality of the Work and to determine in general if the Work is being performed in accordance with the Contract Documents and as otherwise required by DSA.

4.2.3 Limitations of Construction Responsibility

The Architect, District and CM shall not have control over, charge of, or be responsible for construction means, methods, techniques, schedules, sequences or procedures, fabrication, procurement, shipment, delivery, receipt, installation, or for safety precautions and programs in connection with the Work, since these are solely the Contractor's responsibility under the Contract Documents. The Architect, District and CM shall not be responsible for the Contractor's, Subcontractors', material or equipment suppliers', or any other person's schedules or failure to carry out the Work in accordance with the Contract Documents. The Architect, District and CM shall not have control over or charge of acts or omissions of the Contractor, Subcontractors, their agents or employees, or any other persons or entities performing or supplying portions of the Work. The Contractor shall not be relieved of obligations to perform the Work in accordance with the Contract Documents either by activities or duties of the Architect, District or CM in the Architect, District or CM's administration of the Contract Documents, or by tests, inspections, or approvals required or performed by persons other than the Contractor.

4.2.4 Communications Facilitating Contract Administration

Except where a CM is on the Project, or as otherwise provided in the Contract Documents or when direct communications are warranted by special circumstances, the District and the Contractor shall communicate through the Architect. In the cases where a CM is hired for the Project, all

communication shall be through the CM (unless otherwise directed) with copies to the District, Architect and Inspector. Where direct communication is necessary between the District and the Contractor, the District's communication shall be through the District's authorized designated person. The Architect and CM shall be promptly informed, and shall receive copies of all written communications. Contractor shall not rely upon any communications from the District that is not from the District's Representative. Communications by and with the Architect's consultants shall be through the Architect. Communications by and with Subcontractors and material or equipment suppliers shall be through the Contractor. In the case where a CM is hired for the Project, the CM shall be the main point of contact for communication of information. Copies should be sent to the Architect, District Representative and Inspector.

4.2.5 Payment Applications

The Architect will review and make recommendations to the District regarding the amounts due the Contractor on the Certificates for Payment pursuant to Article 9.3.4and subject to the Inspector's review, (CM review, if applicable) and Architect's observation. This review of Payment Applications is sometimes called a "Pencil Draft." Return of a Pencil Draft shall constitute the District's dispute of the Payment Application that has been submitted. Contractor shall promptly respond to Pencil Drafts or Contractor's Payment Applications may be delayed. Contractor's failure to promptly respond to a Pencil Draft shall qualify as a delay in the Prompt Payment of a Request for Payment or Request for Retention.

4.2.6 Rejection of Work

In addition to the rights, duties, and obligations of the Inspector under this Article, the Architect may recommend to the District that the District reject Work which does not conform to the Contract Documents. Whenever the Architect considers it necessary or advisable to achieve the intent of the Contract Documents, the Architect (and/or CM) may recommend to the District that the District require additional inspection or testing of the Work in accordance with Article 13.5, whether or not such Work is Fabricated, installed, or completed. District may have Non-conforming Work removed and replaced pursuant to Article 9.7. However, neither this authority of the Architect (or CM) nor a decision made in good faith either to exercise or not to exercise such authority shall give rise to a duty or responsibility of the Architect (or CM) to the Contractor, Subcontractors, material and equipment suppliers, their agents or employees, or other persons performing portions of the Work.

Contractor shall, without charge, replace or correct Work found by the District to not be in conformance to Contract requirements. Contractor shall promptly segregate and remove rejected materials from the Project site.

This section is does not address a Notice of Non-Compliance and the remedies associated with a Notice of Non-Compliance which are addressed at Article 7.1.2

4.2.7 Warranties upon Completion

The Architect (and where applicable CM), in conjunction with the Inspector will conduct field reviews of the Work to determine the date of Substantial Completion and of Final Completion, shall receive and forward to the District for the District's review written warranties and related documents required by the Contract and assembled by the Contractor, and will issue a final Certificate for Payment when the Architect believes the Work has been completed in compliance with the requirements of the Contract Documents (See Article 9.11 for Close-Out). The handling by the Architect (or where applicable CM) of such warranties, maintenance manuals, or similar documents shall not diminish or transfer to the

Architect any responsibilities or liabilities required by the Contract Documents of the Contractor or other entities, parties, or persons performing or supplying the Work.

On some Projects, the District will take a phased occupancy of the Project. In those cases, the District may commence the running of warranties on the buildings, or phases that are accepted after Punch List is completed and the District has accepted Completion of the separate phase. A separate Notice of Completion may be filed for the separate building or phase of work and warranties shall commence for the separate phase only to the extent that warranties do not require coordination or connection to other buildings or other parts of the site and only if the warranted item is completed to its entirety in the segregated building or phased area.

If written warranties are not provided at the time the Punch List is nearing completion, Architect (with recommendations from the CM and Inspector) shall determine the dollar value of the warranties and shall make recommendation for withholdings necessary to effectuate the transfer of such warranties to the District for future use as part of the Punch List for the Project pursuant to Article 9.6.

Warranties are not commenced through utilizing of equipment for testing and operation as necessary to acclimate buildings or where necessary to test systems.

4.2.8 Interpretation

The Architect will interpret and decide matters concerning performance and requirements of the Contract Documents. Architect shall make clarifications as necessary to interpret the Contract Documents.

4.3 PROJECT INSPECTOR

4.3.1 General

One or more Project Inspectors employed by the District and approved by the Division of the State Architect will be assigned to the Work in accordance with the requirements of Title 24 of the California Code of Regulations. The Inspector(s) duties are as specifically defined in Title 24 Section 4-333 and 4-342 and in DSA IR A-8.

4.3.2 Inspector's Duties and DSA Noted Timelines for Inspection

All Work shall be under the observation of the Inspector. Contractor shall establish a protocol for requesting inspection with Inspector so as to not delay the Work and provide adequate time for the Inspector to perform inspection. If such a protocol is not established ahead of time, Inspector may utilize the time criteria set by Title 24 of 48 hours in advance of submitting form DSA 156 for each new area. The Inspector shall have free access to any or all parts of the Work at any time. The Contractor shall furnish the Inspector such information as may be necessary to keep the Inspector fully informed regarding progress and manner of Work and character of materials. Such observations shall not, in any way, relieve the Contractor from responsibility for full compliance with all terms and conditions of the Contract, or be construed to lessen to any degree the Contractor's responsibility for providing efficient and capable superintendence. The Inspector is not authorized to make changes in the Drawings or Specifications nor shall the Inspector's approval of the Work and methods relieve the Contractor of responsibility for the correction of subsequently discovered defects, or from its obligation to comply with the Contract Documents.

Inspector shall electronically post DSA required documents on the DSA electronic posting website. It is the Contractor's responsibility to determine the status of posting and determine if all the criteria for sign off of a category of Work on the Project Inspection Card (Form DSA 152) as defined more thoroughly in the most current version of the DSA 152 manual posted on the DSA website.

Inspector may collaborate with Contractor about approval of areas that may be constructed and approved incrementally under the DSA 152 card pursuant to the guidelines of PR-13 at Article 1.17. Inspector shall work with Contractor to present incremental approval proposals to DSA.

4.3.3 Inspector's Authority to Reject or Stop Work

The Inspector shall have the authority to reject Work whenever provisions of the Contract Documents are not being complied with, and Contractor shall instruct its Subcontractors and employees accordingly. In addition, the Inspector may stop any Work that poses a probable risk of harm to persons or property. The Contractor shall instruct its employees, Subcontractors, material and equipment suppliers, etc., accordingly. The absence of any Stop Work Order or rejection of any portion of the Work shall not relieve the Contractor from any of its obligations pursuant to the Contract Documents.

4.3.4 Inspector's Facilities

Within seven (7) days after the notice to proceed, the Contractor shall provide the Inspector with the temporary facilities as required. More specific requirements for the Inspector facilities may be further described under Division 1 of the Specifications.

4.3.5 Testing Times

The District will provide inspection and testing at its cost during the normal eight (8) hour day Monday through Friday (except holidays). Work by the Contractor outside of the normal eight (8) hour day shall constitute an authorization from the Contractor to the District to provide inspection and testing as required outside of the normal eight (8) hour day. Contractor shall provide adequate time for inspections so as to not delay the Work. An advanced timing protocol may be established pursuant to Article 4.3.2. If the Contractor is behind Schedule then it is incumbent on the Contractor to provide advance forecast through look ahead of the anticipated date for inspection so the Inspector may plan their activities so as to not delay the Project. Contractor shall reimburse District for any additional costs associated with inspection and testing (including re-inspection and re-testing) outside the normal eight-hour day and for any retests caused by the Contractor.

It is the Contractor's responsibility to request special inspections with sufficient time so all testing may be timely completed and posted so work may proceed and the Inspector's signature is attached to the Project Inspection Card (Form 152). Specifically, timely request for special inspection under the DSA Verified Report Forms 291 (laboratory), DSA Verified Report Form 292 (Special Inspection), and DSA Verified Report 293 (geotechnical) since DSA requirements under PR 13-01 specifically gives the Special Inspections 14 days to post to the DSA website. Failure to plan and pay (if applicable) for quicker delivery of Special Inspections may be counted as Float, but is not considered Governmental Delay Float under Article 8.1.4.

4.3.6 Special Inspections, Inspections or Tests Out of State, Out of Country or Remote from Project

If Contractor has a Subcontractor or supplier that requires in plant or special inspections, inspections or tests that are out of the country, out of the state or a distance of more than 200 miles from the Project Site, the District shall provide the Special Inspector or individual performing tests time for inspection and testing during normal work hours. Contractor, however, is responsible for the cost of travel, housing, food, out of area premiums that may be in the Inspector/Testing Agreement with District, or other expenses necessary to ensure proper inspection, special inspection or testing is provided by a DSA Certified Inspector, Special Inspector, or individual performing tests. In some cases all three (DSA Inspector, Special Inspector, and Tester) may be required. In addition, if the DSA Certified Inspector, Special Inspector, or individual performing test has contractual travel clauses or special rates for out of town inspection, Contractor is responsible for all costs associated with the contractual travel costs in addition to all other costs. Arrangements for inspection and/or testing shall be made far enough in advance so as to not delay the Work.

4.4 STOP WORK ORDER

DSA may issue a Stop Work Order, or an Order to Comply, when either (1) the Work proceeds without DSA approval; (2) the Work proceeds without a DSA Inspector of Record, or (3) where DSA determines that the Work is not being performed in accordance with applicable rules and regulations, and would compromise the structural integrity of the Project or would endanger lives. If a Stop Work Order is issued, the Work in the affected area shall cease until DSA withdraws the Stop Work Order. Pursuant to Education Code section 17307.5(b), the District shall not be held liable in any action filed against the District for any delays caused by compliance with the Stop Work Order, except to the extent that an error or omission by the District is the basis for the issuance of the Stop Work Order.

Examples of Stop Work Orders that may be issued by DSA include DSA Bulletin 07-04 and Policy 10-01, the installation of automatic fire sprinkler systems without approved Plans, covering Work that has not been approved by Inspector on DSA Project Inspection Card (Form 152).

4.5 RESPONSIBILITY FOR ADDITIONAL CHARGES INCURRED BY THE DISTRICT FOR PROFESSIONAL SERVICES

If at any time prior to the completion of the requirements under the Contract Documents, the District is required to provide or secure additional professional services (including CM, Inspection, Architect, Engineering and Special Consultant Services) for any reason by any act of the Contractor, the District may seek a Deductive Change Order for any costs incurred for any such additional services, which costs shall be deducted from the next progress payment. A Deductive Change Order shall be independent from any other District remedies and shall not be considered a waiver of any District rights or remedies. If payments then or thereafter due to the Contractor are not sufficient to cover such amounts, the Contractor shall pay the difference to the District. Additional services shall include, but shall not be limited to, the following:

a. Services made necessary by the default of the Contractor (Article 14 or Article 2.2).

b. Services made necessary due to the defects or deficiencies in the Work of the Contractor (Article 2.2 and Article 9.6).

c. Spurious or frivolous RFI's issued that do not conform to the requirements of Article 7.4. Issuance of the same RFI after receiving an answer from the Architect or Engineer

d. Review of Schedules that are provided by Contractor that do not Conform with the Requirements of Article 8.

e. Preparation of a CCD or ICD to correct a Contractor Deficiency, or Contractor Caused Notice of Non-Compliance (See Article 7.3).

f. Review of Incomplete Shop Drawings or Submittals, including the submission of Piecemeal Shop Drawings or Submittals unless piecemeal Submittals are specifically agreed upon by District (See Article 3.9)

g. Services required by failure of the Contractor to perform according to any provision of the Contract Documents.

h. Services in connection with evaluating substitutions of products, materials, equipment, Subcontractors' proposed by the Contractor, and making subsequent revisions to Drawings, Specifications, obtaining DSA approvals, DSA costs for review of CCD's, other governmental agency review costs, and providing other documentation required (except for the situation where the specified item is no longer manufactured or available). (See Article 3.10)

i. Services for evaluating and processing Claims or Disputes submitted by the Contractor in connection with the Work outside the established Change Order process.

j. Services required by the failure of the Contractor to prosecute the Work in a timely manner in compliance within the specified time of completion.

k. Services in conjunction with the testing, adjusting, balancing and start-up of equipment other than the normal amount customarily associated for the type of Work involved.

l. Services in conjunction with more than one (1) re-review of Submittals of Shop Drawings, Product Data, samples, RFI's etc.

4.6 DISPUTES AND CLAIMS

4.6.1 Decision of Architect

"Disputes" or "Claims" as defined in Article 4.6.9.1 between District and Contractor involving money or time, including those alleging an error or omission by the Architect shall be referred initially to the Architect for action as provided in Article 4.6.2 within ten (10) days after Contractor's Article 7 request for Change is denied. If there is a CM, the CM shall receive the Dispute and may review and also assemble opinions and documents to assist the Architect. A decision by the Architect, as provided in Article 4.6.5, shall be required as a condition precedent to proceeding with remedies set forth in Article 4.6.9 as to all such matters arising prior to the date Retention Payment Application is due, regardless of whether such matters relate to execution and progress of the Work, or the extent to which the Work has reached Final Completion.

The condition precedent of an Architect decision shall be waived if: (1) the position of Architect is vacant; (2) the Architect has failed to take action required under Article 4.6.5 within the time

periods required therein; or (3) the Dispute or Claim relates to a stop notice claim not arising from any extra Change Order or Immediate Change Directive for which approval has not been provided.

4.6.2 Architect's Review

The Architect (and CM) will review the Dispute and take one or more of the following preliminary actions upon receipt of a Dispute: (1) request additional supporting data from the claimant; (2) submit a schedule to the parties indicating when the Architect expects to take action; (3) reject the Dispute in whole or in part, stating reasons for rejection; (4) recommend approval of the Dispute; or (5) suggest a compromise. The Architect may also, but is not obligated to, notify the Surety, if any, of the nature and amount of the Dispute.

4.6.2.1 *Architectural Immunity*. Architect review of Disputes and Claims shall be impartial and meant to resolve Disputes and Claims. Pursuant to the case, Huber, Hunt & Nichols, Inc. v. Moore (1977) 67 Cal.App.3d 278, the Architect is provided a quasi-judicial immunity for interpreting and deciding Disputes and Claims between the District and Contractor.

4.6.3 Documentation if Resolved

If a Dispute has been resolved, the Architect (and/or CM) will prepare a Change Order or obtain appropriate documentation to document the terms for Board approval.

4.6.4 Actions if Not Resolved

If a Dispute has not been resolved and all documentation requested pursuant to Article 4.6.2 has been provided, the Contractor shall, within ten (10) days after the Architect's initial response, assemble all the documents involved in the Dispute including copies of all back-up documentation of costs and the basis for the Dispute and take one or more of the following actions: (1) modify the initial Dispute; (2) notify the Architect that the initial Dispute stands; or (3) supplement with additional supporting data and re-submit to the Architect under Article 4.6.2.

4.6.5 Architect's Written Decision

If a Dispute has not been resolved after consideration of the foregoing and of other evidence presented by the parties or requested by the Architect, the Architect (or Architect through CM) shall provide a written decision twenty (20) days after compliance with Article 4.6.4. Upon expiration of such time period, the Architect (or Architect through CM) will render to the parties its written decision relative to the Dispute, including any change in the Contract Sum or Contract Time or both. The Architect may also request reasonable additional time to complete Architect's written decision.

If the resolution of the Dispute by the Architect is not satisfactory to the Contractor and copies of all back-up documentation of costs and the basis for the Dispute is fully articulated in a package of material that is complete, the Contractor may then submit a Claim to the District under Article 4.6.9.

4.6.6 Continuing Contract Performance

Pending final resolution of a Dispute or Claim, including, negotiation, mediation, arbitration, or litigation, the Contractor shall proceed diligently with performance of the Contract, and the District shall continue to make any undisputed payments in accordance with the Contract (less any

withholdings or offsets). If the Claim is not resolved, Contractor agrees it will neither rescind the Contract nor stop the progress of the work, but Contractor's sole remedy shall be to submit such controversy to determination by a court of competent jurisdiction in the county where the Project is located, after the Project has been completed, and not before.

4.6.6.1 *District's Option to Submit Individual Disputes to Arbitration during Claims and Disputes Process*. At the District's sole option, in order to more efficiently resolve Claims during the Project and prior to the completion of the Claims Process, pursuant to Government Code section 9201, the District may submit individual Disputes or Claims for binding arbitration and Contractor agrees to the resolution of for each individual Dispute or Claim by an Arbitrator, including resolution of time and delays. If binding arbitration is utilized for individual Disputes or Claims, such resolution is full and final as to that particular Dispute or Claim. THIS INDIVIDUAL DISPUTE ARBITRATION PROCESS IS NOT AN ARBITRATION CLAUSE AND SHALL NOT BE CONSTRUED AS AN AGREEMENT TO ARBITRATE. THIS INDIVIDUAL DISPUTES ARBITRATION PROCESS IS FOR THE SOLE PURPOSE OF STREAMLINING AND RESOLVING DISPUTES OR CLAIMS DURING CONSTRUCTION AND SHALL BE REQUESTED ON SPECIFIC INDIVIDUAL ITEMS BY THE DISTRICT PRIOR TO RETENTION PAYMENT (EVEN IF THERE ARE DEDUCTIONS MADE FROM RETENTION PAYMENT) WHICH REPRESENTS THE FINAL COMPLETION OF THE PROJECT.

a. If there is no Retention remaining on the Project, individual Disputes initiated prior to Project Final Completion shall continue until a final disposition of the Arbitration or resolution of the individual Claim or Dispute.

b. No Tolling. The Arbitration process shall not toll the Disputes or Claims process under Article 4.6 or the requirement to submit Claims to Court under Article 4.6.9.5.

4.6.7 Claims for Concealed Trenches or Excavations Greater Than Four Feet Below the Surface

When any excavation or trenching extends greater than four feet below the surface or if any condition involving hazardous substances are encountered:

a. Immediately upon discovery, The Contractor shall promptly, and before the following conditions are disturbed, notify the District, by telephone and in writing, of the condition except:

1. If such condition is a hazardous waste condition, Contractor's bid includes removal or disposal of hazardous substances. Material that the Contractor believes may be a material that is hazardous waste, as defined in Section 25117 of the Health and Safety Code, is required to be removed to a Class I, Class II, or Class III disposal site in accordance with the provisions of existing law. In such case, the notice bulletin procedures of Article 7 apply.

2. Subsurface or latent physical conditions at the Site differing from those indicated in the Drawings, Specifications, Soils Report, and from Contractor's own investigation under Article 2.1.

3. Unknown physical conditions at the Site of any unusual nature, different materially from those ordinarily encountered and generally recognized as inherent in Work of the character provided for in the Contract.

b. The District shall investigate the conditions, and if District finds that the conditions do materially so differ, do involve hazardous waste, and cause a decrease or increase in the Contractor's cost of, or the time required for, performance of any part of the Work shall issue a Change Order or Construction Change Document under the procedures described in the Contract.

c. In the event that a dispute arises between the public entity or District and the Contractor whether the conditions materially differ, involve hazardous waste, or cause a decrease or increase in the Contractor's cost of, or time required for, performance of any part of the Work, the Contractor shall not be excused from any scheduled Completion Date provided for by the Contract, but shall proceed with all Work to be performed under the Contract. The Contractor shall retain any and all rights provided either by Contract or by law which pertain to the resolution of disputes and protests between the contracting parties.

4.6.8 Dispute Concerning Extension of Time.

If Contractor and District cannot agree upon an extension of time, whether compensable or not, then Contractor must have first completed the procedures set forth in Article 8.4. Upon completion of the procedures set forth under Article 8.4, Contractor must then comply with the requirements in this Article including those set forth under Article 4.6.9.

4.6.9 Claims Procedures

Pursuant to the remedies under Public Contract Code section 9201 and Government Code section 930.2, Contractor, through execution of this Agreement, also agrees to comply with the Claims requirements of Article 4.6 to quickly and efficiently resolve Disputes and Claims. Further, to provide a level of accuracy to the records submitted, the District shall have the right to audit books and records pursuant to Article 13.11 based on the actual costs incurred and to reduce the uncertainty in resolving Disputes and Claims with limited information.

4.6.9.1 *Procedure Applicable to All Claims*

a. Definition of Claim: A "Claim" is where a Dispute between the parties rises to the level where backup documentation is assembled and provided to the District as a separate demand by the Contractor for: (1) a time extension, including, without limitation, for relief from damages or penalties for delay assessed by the District under the Contract; (2) payment by the District of money or damages arising from Work done by, or on behalf of, the Contractor pursuant to the Contract and payment for which is not otherwise expressly provided for or to which the Contractor is not

otherwise entitled to; or (3) an amount of payment disputed by the District. If the Claim is for damages associated with a DSA Stop Work Order, the Contractor shall not be entitled to a request for Compensation, but shall be entitled to utilize Governmental Delay Float (See Article 8.1.4.1.)

b. Filing Claim Is Not Basis to Discontinue Work: The Contractor shall promptly comply with Work under the Contract or Work requested by the District even though a written Claim has been filed. The Contractor and the District shall make good faith efforts to resolve any and all Claims that may arise during the performance of the Work covered by this Contract.

c. Claim Notification: The Contractor shall within seven (7) calendar days after the written decision of the Architect, or if the time period for Architect's decision has passed under Article 4.6.5, submit a notification in writing sent by registered mail or certified mail with return receipt requested, with the District (and the District's CM) stating clearly the basis for the Claim and including all relevant and required documents. If the notification is not submitted within seven (7) days after the written decision of the Architect or the passage of time under Article 4.6.5, the Contractor shall be deemed to have waived all right to assert the Claim, and the Claim shall be denied. Claims submitted after the Retention Payment date shall also be considered null and void by the District. All Claims shall be reviewed pursuant to Articles 4.6.1 through 4.6.5.

The Formal Notification of Claim must be presented as follows:

(1) The term "Claim" must be at the top of the page in no smaller than 20 point writing.

(2) All documentation submitted pursuant to Article 4.6 to the Architect shall be submitted with the "Claim."

(3) A stack of documents, copy of all Project documents, or the submission of random documents shall not constitute an adequate reference to supporting documentation.

(4) Any additional or supporting documentation that Contractor believes is relevant should be submitted at this time.

d. Reasonable Documents to Support Claim: The Contractor shall furnish reasonable documentation to support the Claim. The Contractor shall provide all written detailed documentation which supports the Claim, including but not limited to: arguments, justifications, cost, estimates, Schedule analysis and detailed documentation. The format of the required reasonable documentation to support the Claim shall include, without limitation:

1. Cover letter.

2. Summary of factual basis of Claim and amount of Claim.

3. Summary of the basis of the Claim, including the specific clause and section under the Contract under which the Claim is made.

4. Documents relating to the Claim, including:

   a. Specifications sections in question.
   b. Relevant portions of the Drawings
   c. Applicable Clarifications (RFI's)
   d. Other relevant information, including responses that were received.
   e. Contractor Analysis of Claim merit.
      (a) Contractor's analysis of any Subcontractor vendor Claims that are being passed through.
      (b) Any analysis performed by outside consultants
      (c) Any legal analysis that Contractor deems relevant
   f. Break down of all costs associated with the Claim.
   g. For Claims relating to time extensions, an analysis and supporting documentation evidencing any effect upon the critical path in conformance with the requirements of Article 8.4 chronology of events and related correspondence.
   h. Applicable Daily Reports and logs.
      (a) If the Daily Reports or Logs are not available, lost or destroyed, there shall be a presumption that the lost documentation was unfavorable to the Contractor. See California Civil Jury Instruction 204.
   i. For Claims involving overhead, cost escalation, acceleration, disruption or increased costs, a full version of job costs reports organized by category of work or Schedule of Values with budget information tracked against actual costs. Any and all supporting back-up data, including the original bid (and associated original unaltered metadata).
      (a) The metadata and bid information shall be provided confidentially and subject to a protective order to prevent dissemination to other contractors or to the public. However, the bid documentation should remain intact and available for review and inspection in case of this type of increased cost Claim.
      (b) This data on the bid shall be made available to any District attorneys or experts and shall also be utilized as evidence for any legal proceedings.
      (c) If the bid documentation is not available, lost or destroyed, there shall be a presumption that the lost bid documentation was unfavorable to the

Contractor. See California Civil Jury Instruction 204.

e. Certification: The Contractor (and Subcontractors, if applicable) shall submit with the Claim a certification under penalty of perjury:

1. That the Contractor has reviewed the Claim and that such Claim is made in good faith;

2. Supporting data are accurate and complete to the best of the Contractor's knowledge and belief;

3. The amount requested accurately reflects the amount of compensation for which the Contractor believes the District is liable.

4. That the Contractor is familiar with Government Code sections 12650 et seq. and Penal Code section 72 and that false claims can lead to substantial fines and/or imprisonment.

f. Signature of Certification: If the Contractor is not an individual, the certification shall be executed by an officer or general partner of the Contractor having overall responsibility for the conduct of the Contractor's affairs.

g. Upon receipt of a Claim and all supporting documents as required above, the District shall conduct a reasonable review of the Claim and, within a period not to exceed 45 days, shall provide the Contractor a written statement identifying what portion of the Claim is disputed and what portion is undisputed. Upon receipt of a Claim, the District and Contractor may, by mutual agreement, extend the time period provided in this paragraph.

h. If the District needs approval from its governing Board to provide the Contractor a written statement identifying the disputed portion and the undisputed portion of the Claim, and the governing Board does not meet within the 45 days or within the mutually agreed to extension of time following receipt of a Claim sent by registered mail or certified mail, return receipt requested, the District shall have up to three days following the next duly publicly noticed meeting of the governing Board after the 45-day period, or extension, expires to provide the Contractor a written statement identifying the disputed portion and the undisputed portion.

i. Any payment due on an undisputed portion of the Claim shall be processed and made within 60 days after the District issues its written statement. If the District fails to issue a written statement, paragraph o below shall apply.

j. If the Contractor disputes the District's written response, or if the District fails to respond to a Claim issued pursuant to this Article 4.6.9 within the time prescribed, the Contractor may demand in writing an informal conference to meet and confer for settlement of the issues in dispute. Upon receipt of a demand in writing sent by registered mail or certified mail, return receipt requested, the District shall schedule a meet and confer conference within 30 days for settlement of the Claim.

k. Within 10 business days following the conclusion of the meet and confer conference, if the Claim or any portion of the Claim remains in dispute, the District shall provide the Contractor a written statement identifying the portion of the Claim that remains in dispute and the portion that is undisputed. Any payment due on an undisputed portion of the Claim shall be processed and made within 60 days after the District issues its written statement. Any disputed portion of the Claim, as identified by the Contractor in writing, shall be submitted to nonbinding mediation, with the District and the Contractor sharing the associated costs equally. The District and Contractor shall mutually agree to a mediator within 10 business days after the disputed portion of the Claim has been identified in writing. If the parties cannot agree upon a mediator, each party shall select a mediator and those mediators shall select a qualified neutral third party to mediate with regard to the disputed portion of the Claim. Each party shall bear the fees and costs charged by its respective mediator in connection with the selection of the neutral mediator. If mediation is unsuccessful, the parts of the Claim remaining in dispute shall be subject to applicable procedures in Article 4.6.9.5.

l. For purposes of this Article 4.6.9, mediation includes any nonbinding process, including, but not limited to, neutral evaluation or a dispute review board, in which an independent third party or board assists the parties in dispute resolution through negotiation or by issuance of an evaluation. Any mediation utilized shall conform to the timeframes in this section.

m. Unless otherwise agreed to by the District and the Contractor in writing, the mediation conducted pursuant to this Article 4.6.9 shall excuse any further obligation under Section 20104.4 to mediate after litigation has been commenced.

n. This Claims process does not preclude the District from requiring arbitration of disputes under private arbitration or the Public Works Contract Arbitration Program, if mediation under this Article 4.6.9 does not resolve the parties' Claim. This Claims process does not preclude the District from submitting individual Disputes or Claims to binding arbitration pursuant to Article 4.6.9.4 below.

o. Failure by the District to respond to a Claim from the Contractor within the time periods described in this subdivision or to otherwise meet the time requirements of this Article 4.6.9 shall result in the Claim being deemed

rejected in its entirety. A Claim that is denied by reason of the District's failure to have responded to a Claim, or its failure to otherwise meet the time requirements of this Article 4.6.9, shall not constitute an adverse finding with regard to the merits of the Claim or the responsibility or qualifications of the Contractor.

p. If a subcontractor or a lower tier subcontractor lacks legal standing to assert a Claim against a District because privity of contract does not exist, the Contractor may present to the District a Claim on behalf of a subcontractor or lower tier subcontractor. A subcontractor may request in writing, either on his or her own behalf or on behalf of a lower tier subcontractor, that the Contractor present a Claim for work which was performed by the subcontractor or by a lower tier subcontractor on behalf of the subcontractor. The subcontractor requesting that the Claim be presented to the District shall furnish reasonable documentation to support the Claim. Within 45 days of receipt of this written request, the Contractor shall notify the subcontractor in writing as to whether the Contractor presented the Claim to the District and, if the Contractor did not present the Claim, provide the subcontractor with a statement of the reasons for not having done so.

q. Upon receipt of a Claim, the parties may mutually agree to waive, in writing, mediation and proceed directly to the commencement of a civil action or binding arbitration, as applicable.

r. The Contractor's Claim shall be denied if it fails to follow the requirements of this Article.

4.6.9.2 *District (through CM or District's Agent or Attorney) May Request Additional Information*. Within thirty (30) days of receipt of the Claim and the information under this Article, the District may request in writing any additional documentation supporting the Claim or documentation relating to defenses to the Claim which the District may assert. If additional documents are required, the time in which the Claim is evaluated may be extended by a reasonable time so the Claim and additional documents may be reviewed.

4.6.9.3 *Claims Procedures in Addition to Government Code Claim.* Nothing in the Claims procedures set forth in this Article 4 of the General Conditions shall act to waive or relieve the Contractor from meeting the requirements set forth in Government Code section 900 et seq.

4.6.9.4 *Binding Arbitration of Individual Claim Issues.* To expedite resolution of Claims pursuant to Public Contract Code section 9201, at the District's sole option, the District may submit individual Claims to Arbitration prior to Retention Payment consistent with the requirements of Article 4.6.6.1.

4.6.9.5 *Resolution of Claims in Court of Competent Jurisdiction.* If Claims are not resolved under the procedure set forth and pursuant to Article 4.6.9, such Claim or controversy shall be submitted to a court in the County of the location of the Project after the Project has been completed, and not before.

4.6.9.6 *Warranties, Guarantees and Obligations.* The duties and obligations imposed by these General Conditions and the rights and remedies available hereunder to the parties hereto, and, in particular but without limitation, the warranties, guarantees and obligations imposed upon Contractor by the General Conditions and amendments thereto; and all of the rights and remedies available to District and Architect thereunder, are in addition to, and are not to be construed in any way as a limitation of, any rights and remedies available to any or all of them which are otherwise imposed or available by laws or regulations by special warranty or guarantee or by other provisions of the Contract Documents, and the provisions of this Article will be as effective as if repeated specifically in the Contract Documents in connection with each particular duty, obligation, right and remedy to which they apply.

ARTICLE 5
SUBCONTRACTORS

5.1 DEFINITIONS

5.1.1 Subcontractual Relations Bound to Same Contract Terms at General Contractor

By appropriate agreement, written where legally required for validity, the Contractor shall require each Subcontractor, to the extent of the Work to be performed by the Subcontractor, to be bound to the Contractor by terms of the Contract Documents, and to assume toward the Contractor all the same obligations and responsibilities, assumed by Contractor pursuant to the Contract Documents. Each subcontract agreement shall preserve and protect the rights of the District and the Architect under the Contract Documents with respect to the Work to be performed by the Subcontractor so that subcontracting thereof will not prejudice such rights. Where appropriate, the Contractor shall require each Subcontractor to enter into similar agreements with Sub-subcontractors. The Contractor shall make available to each proposed Subcontractor, prior to the execution of the subcontract agreement, copies of the Contract Documents to which the Subcontractor will be bound. Upon written request of the Subcontractor, the Contractor shall identify to the Subcontractor the terms and conditions of the proposed subcontract agreement, which may be at variance with the Contract Documents. Subcontractors shall similarly make copies of applicable portions of such documents available to their respective proposed Sub-subcontractors.

5.1.2 Subcontractor Licenses and DIR Registration

All Subcontractors shall be properly licensed by the California State Licensing Board. All Subcontractors (of any tier) performing any portion of the Work must comply with the Labor Code sections 1725.5 and 1771.1 and must be properly and currently registered with the California Department of Industrial Relations and qualified to perform public works pursuant to Labor Code section 1725.5 throughout the duration of the Project. No portion of the Work is permitted to be performed by a Subcontractor of any tier unless the subcontractor is properly registered with DIR. Any Subcontractors of any tier not properly registered with DIR shall be substituted in accordance with Labor Code section 1771.1.

5.1.3 Substitution of Subcontractor

Substitution of Subcontractors shall be permitted only as authorized under Public Contract Code §§ 4107 et seq. Any substitutions of Subcontractors shall not result in any increase in the Contract Price or result in the granting of any extension of time for the completion of the Project.

5.1.4 Contingent Assignment of Subcontracts and Other Contracts

Each subcontract, purchase order, vendor contract or agreement for any portion of the Work is hereby assigned by the Contractor to the District provided that:

a. Such assignment is effective only after Termination of this Contract with the Contractor by the District as provided under Article 14 and only for those subcontracts and other contracts and agreements that the District accepts by notifying the Subcontractor or Materialman (as may be applicable) in writing; and

b. Such assignment is subject to the prior rights of the Surety(ies) obligated under the Payment Bond and Performance Bond.

c. The Contractor shall include adequate provisions for this contingent assignment of subcontracts and other contracts and agreements in each such document.

ARTICLE 6
CONSTRUCTION BY DISTRICT OR BY SEPARATE CONTRACTORS

6.1 DISTRICT'S RIGHT TO PERFORM CONSTRUCTION AND TO AWARD SEPARATE CONTRACTS

6.1.1 Separate Contracts.

6.1.1.1 District reserves the right to let other contracts in connection with this Work. Contractor shall afford other contractors reasonable opportunity for (1) introduction and storage of their materials; (2) access to the Work; and (3) execution of their work. Contractor shall properly connect and coordinate its work with that of other Contractors.

6.1.1.2 If any part of Contractor's Work depends on proper execution or results of any other contractor, the Contractor shall inspect and within seven (7) days or less, report to Architect, in writing, any defects in such work that render it unsuitable for proper execution of Contractor's Work. Contractor will be held accountable for damages to District for that Work which it failed to inspect or should have inspected. Contractor's failure to inspect and report shall constitute its acceptance of other contractors' Work as fit and proper for reception of its Work, except as to defects which may develop in other contractors' work after execution of Contractor's work.

6.1.1.3 To ensure proper execution of its subsequent Work, Contractor shall measure and inspect Work already in place and shall at once report to the Architect in writing any discrepancy between executed Work as built and the Contract Documents.

6.1.1.4 Contractor shall ascertain to its own satisfaction the scope of the Project and nature of any other contracts that have been or may be awarded by District in prosecution of the Project and the potential impact of such Work on the Baseline Schedule or Schedule updates.

6.1.1.5 Nothing herein contained shall be interpreted as granting to Contractor the exclusive occupancy at the site of Project. Contractor shall not cause any unnecessary hindrance or delay to any other contractor working on the Project Site. If execution of any contract by the District is likely to cause interference with Contractor's performance of this Contract, once Contractor provides District timely written notice and identifies the Schedule Conflict, District shall decide which contractor shall cease work temporarily and which contractor shall continue, or whether Work can be coordinated so that contractors may proceed simultaneously.

6.1.1.6 District shall not be responsible for any damages suffered or extra costs incurred by Contractor resulting directly or indirectly from award or performance or attempted performance of any other contract or contracts at the Project necessary for the performance of the Project (examples include Electrical Utility Contractor, separate offsite contractor, a separate grading contractor, furniture installation etc.)

CONTRACTOR IS AWARE THAT THIS CONTRACT MAY BE SPLIT INTO SEVERAL PHASES BASED ON DOCUMENTATION PROVIDED WITH THIS BID OR DISCUSSED AT THE JOB WALK. CONTRACTOR HAS MADE ALLOWANCE FOR ANY DELAYS OR DAMAGES WHICH MAY ARISE FROM COORDINATION WITH CONTRACTORS REQUIRED FOR OTHER PHASES.

IF ANY DELAYS SHOULD ARISE FROM ANOTHER CONTRACTOR WORKING ON A DIFFERENT PHASE, CONTRACTOR'S SOLE REMEDY FOR DAMAGES, INCLUDING DELAY DAMAGES, SHALL BE AGAINST THE CONTRACTOR WHO CAUSED SUCH DAMAGE AND NOT THE DISTRICT. CONTRACTOR SHALL PROVIDE ACCESS TO OTHER CONTRACTORS FOR OTHER PHASES AS NECESSARY TO PREVENT DELAYS AND DAMAGES TO OTHER CONTRACTORS WORKING ON OTHER PHASES OF CONSTRUCTION.

6.1.2 District's Right to Carry Out the Work

(See Article 2.2)

6.1.3 Designation as Contractor

When separate contracts are awarded to contractors on the Project Site, the term "Contractor" in the Contract Documents in each case shall mean the Contractor who executes each separate District/Contractor Agreement.

6.1.4 District Notice to the Contractor of Other Contractors

The Contractor shall have overall responsibility to reasonably coordinate and schedule Contractor's activities with the activities of the District's forces and of each separate contractor with the Work of the Contractor, who shall cooperate with them. The Contractor shall participate with other separate contractors and the District in reviewing their construction schedules when:

a. Notice is provided in the Contract Documents of other scope of Work,

b. In the case where there is known Work to be performed by other Contractors

c. For outside contractors hired by utilities

d. Where the Contract Document provides "Work by Others" or "By Others"

e. Where specifically noted during the Pre-Bid Conference

f. Where specifically noted in the Mandatory Job Walk

g. By CO or ICD,

h. With respect to the installation of :
   1. Furniture,
   2. Electronics and networking equipment,
   3. Cabling,
   4. Low voltage,
   5. Off-site work,
   6. Grading (when by a separate contractor),

7. Environmental remediation when excluded by the Contract Documents (i.e. asbestos, lead or other hazardous waste removal)
8. Deep cleaning crews,
9. Commissioning and testing,
10. Keying and re-keying,
11. Programming

6.1.4.1 Exception where no Coordination is Required on the Part of the Contractor for Turn Key Operations. If the Contractor has specifically outlined a "Turn Key" or "Complete Delivery" of a final completed operational school in writing as part of the Baseline Schedule..

6.1.4.2 The Contractor shall make any revisions to the Baseline Schedule (or Schedule Update) and Contract Sum deemed necessary after a joint review and mutual agreement. The Baseline Schedule (or Schedule Update) shall then constitute the Schedules to be used by the Contractor, separate contractors, and the District until subsequently revised. Additionally, Contractor shall coordinate with Architect, District, and Inspector to ensure timely and proper progress of Work.

6.2 CONSTRUCTIVE OWNERSHIP OF PROJECT SITE AND MATERIAL

Upon commencement of Work, the Contractor becomes the constructive owner of the entire site, improvements, material and equipment on Project site. Contractor must ensure proper safety and storage of all materials and assumes responsibility as if Contractor was the owner of the Project site. All risk of loss or damage shall be borne by Contractor during the Work until the date of Completion. As constructive owner of the Project site, Contractor must carry adequate insurance in case of calamity and is not entitled to rely on the insurance requirements as set forth in this Agreement as being adequate coverage in case of calamity.

6.3 DISTRICT'S RIGHT TO CLEAN UP

If a dispute arises among the Contractor, separate contractors, and the District as to the responsibility under their respective contracts for maintaining the premises and surrounding area free from waste materials and rubbish as described in Article 3.12, the District may clean up and allocate the cost among those it deems responsible.

ARTICLE 7
CHANGES IN THE WORK

7.1 CHANGES

7.1.1 No Changes Without Authorization

There shall be no change whatsoever in the Drawings, Specifications, or in the Work without an executed Change Order, Change Order Request, Immediate Change Directive, or order by the Architect for a minor change in the Work as herein provided. District shall not be liable for the cost of any extra work or any substitutions, changes, additions, omissions, or deviations from the Drawings and Specifications unless the District's Governing Board or designated representative with delegated authority (subject to Board ratification) has authorized the same and the cost thereof approved in writing by Change Order or executed Construction Change Document. No extension of time for performance of the Work shall be allowed hereunder unless claim for such extension is made at the time changes in the Work are ordered, and such time duly adjusted in writing in the Change Order. The provisions of the Contract Documents shall apply to all such changes, additions, and omissions with the same effect as if originally embodied in the Drawings and Specifications. Notwithstanding anything to the contrary in this Article 7, all Change Orders shall be prepared and issued by the Architect and shall become effective when executed by the District's Governing Board, the Architect, and the Contractor.

Should any Change Order result in an increase in the Contract Price, the cost of such Change Order shall be agreed to, in writing, in advance by Contractor and District and be subject to the monetary limitations set forth in Public Contract Code section 20118.4 (Please check with the District since there are different interpretations of the limitations of Public Contract Code section 20118.4 depending on the County the Project is located). In the event that Contractor proceeds with any change in Work without first notifying District and obtaining the Architect's and District's consent to a Change Order, Contractor waives any Claim of additional compensation for such additional work and Contractor takes the risk that a Notice of Non-Compliance may issue, a critical path Project delay may occur, and the Contractor will also be responsible for the cost of preparation and DSA CCD review fees for a corrective DSA approved Construction Change Document.

CONTRACTOR UNDERSTANDS, ACKNOWLEDGES, AND AGREES THAT THE REASON FOR THIS NOTICE REQUIREMENT IS SO THAT DISTRICT MAY HAVE AN OPPORTUNITY TO ANALYZE THE WORK AND DECIDE WHETHER THE DISTRICT SHALL PROCEED WITH THE CHANGE ORDER OR ALTER THE PROJECT SO THAT SUCH CHANGE IN WORK BECOMES UNNECESSARY AND TO AVOID THE POSSIBLE DELAYS ASSOCIATED WITH THE ISSUANCE OF A NOTICE OF NON-COMPLIANCE.

7.1.2 Notices of Non-Compliance

Contractor deviation or changes from approved Plans and Specifications may result in the issuance of a Notice of Non-Compliance (See DSA Form 154). Contractor is specifically notified that deviations from the Plans and Specifications, whether major or minor, may result in the requirement to obtain a DSA Construction Change Document to correct the Notice of Non-Compliance. (See Article 7.3.1 for Definition of CCD). In some cases, the lack of a DSA approved CCD AND verification from the Inspector that a Notice of Non-Compliance has been corrected may result in a critical path delay to the next

stage of Work on the Project. Specifically, a deviation from approved Plans and Specifications may prevent approval of the category of Work listed in the DSA 152 Project Inspection Card. Any delays that are caused by the Contractor's deviation from approved Plans and Specifications shall be the Contractor's responsibility.

7.1.3 Architect Authority

The Architect will have authority to order minor changes in the Work that do not involve DSA Approval not involving any adjustment in the Contract Sum, or an extension of the Contract Time.

7.2 CHANGE ORDERS ("CO")

A CO is a written instrument prepared by the Architect and signed by the District (as authorized by the District's Governing Board), the Contractor, and the Architect stating their agreement upon all of the following:

a. A description of a change in the Work;

b. The amount of the adjustment in the Contract Sum, if any; and

c. The extent of the adjustment in the Contract Time, if any.

A CO may be comprised of ICD's, Response to RFP's and COR's

7.3 CONSTRUCTION CHANGE DOCUMENT (CCD Category A, and CCD Category B) and IMMEDIATE CHANGE DIRECTIVE (ICD)

7.3.1 Definitions

7.3.1.1 *Construction Change Document (CCD)*. A Construction Change Document is a DSA term that is utilized to address changes to the DSA approved Plans and Specifications. There are two types of Construction Change Documents. (1) DSA approved CCD Category A for Work affecting structural, access compliance or fire/ life safety of the Project which will require a DSA approval; and, (2) CCD Category B for Work NOT affecting structural safety, access compliance or fire/ life safety that will not require a DSA approval (except to confirm that no approval is required). Both CCD Category A and Category B shall be set forth in DSA Form 140 and submitted to DSA as required.

7.3.1.2 *Immediate Change Directive (ICD)*. An Immediate Change Directive is a written order to the Contractor prepared by the Architect and signed by the District (and CM if there is a CM on the Project) and the Architect, directing a change in the Work and stating a proposed basis for adjustment, if any, in the Contract Sum or Contract Time, or both. The District may by ICD, without invalidating the Contract, direct immediate changes in the Work within the general scope of the Contract consisting of additions, deletions, or other revisions within. If applicable, the Contract Sum and Contract Time will be adjusted accordingly.

In the case of an Immediate Change Directive being issued, Contractor must commence Work immediately or delays from failure to perform the ICD shall be the responsibility of Contractor and the failure to move forward with Work immediately shall also be grounds for Termination under Article 14.

An ICD does not automatically trigger an Article 7.6 Dispute or Claim. Contractor must timely follow the procedures outlined at Article 7.6 and 4.6 where applicable.

Refer to Division 1 and Supplementary General Conditions for a copy of the proposed Immediate Change Directive form.

7.3.2 Use to Direct Change

An ICD shall be used to move work forward immediately and to avoid delay. In some cases, an ICD shall be issued in the absence of agreement on the terms of a CO, COR, or RFP. A copy of an ICD form is provided in the Supplementary General Conditions and Division 1. The anticipated not to exceed price for the Work will be inserted into the ICD. In the case of an ICD issued to correct Contractor Deficiencies or to correct a Contractor caused Notice of Non-Compliance, the ICD may be issued with $0 and no additional time. Contract may prepare a COR associated with the ICD pursuant to Article 7. However, Contractor shall proceed with all Work required under an Approved ICD immediately upon issuance. Failure to proceed with the Work under an ICD shall be grounds for Termination for Cause under Article 14 or take over the Work under Article 2.2.

If adequate time exists, an ICD may be subject of an RFP for pricing and determination if any time that may be required. However, if an RFP is not completed, Contractor shall immediately commence Work when an ICD is issued. If the RFP is incomplete, it may still be completed to be submitted for pricing purposes as long as the RFP is submitted within the timeline provided by the RFP, or within 10 days following issuance of the ICD.

7.3.3 ICD Issued Over a Notice of Non-Compliance or to Cover Work Subject to a DSA 152 Sign Off

In some cases, an ICD shall be for the purpose of proceeding with Work to keep the Project on Schedule and as an acknowledgement by the District that Contractor is proceeding with Work contrary to a Notice of Non-Compliance, prior to issuance of a DSA approved CCD Category A, or to direct the covering of Work which has not yet received a DSA 152 Inspection Approval to move forward.

7.3.3.1 *Contractor Compliance with all Aspects of an IC*D. Contractor is to undertake the ICD and comply with all aspects of the Work outlined in the ICD. Inspector is to inspect the Work pursuant to the ICD. Failure to follow the ICD may result in deduction of the ICD Work under Article 2.2 or Termination of the Contractor pursuant to Article 14.

7.3.3.2 *Exception in the Case of DSA Issued Stop Work Order*. Contractor must proceed with an ICD even if a CCD has not been approved by DSA except in the case of a DSA issued Stop Work Order. If a DSA Stop Work Order is issued, Contractor must stop work and wait further direction from the District.

7.3.3.3 *ICD Due to Contractor Deficiency or Contractor Caused Notice of Non-Compliance.* If an ICD is issued to correct a Contractor Deficiency or a Contractor caused notice of Non-Compliance, Contractor specifically acknowledges responsibility for all consequential damages associated with the Contractor Deficiency or Contractor caused Notice of Non-Compliance and all consequential damages and costs incurred to correct the deficiency under Article 4.5

7.4 REQUEST FOR INFORMATION ("RFI")

7.4.1 Definition

A RFI is a written request prepared by the Contractor requesting the Architect to provide additional information necessary to clarify or amplify an item which the Contractor believes is not clearly shown or called for in the Drawings or Specifications, or to address problems which have arisen under field conditions.

7.4.1.1 A RFI shall not be used as a vehicle to generate time extensions.

7.4.1.2 Resubmission of the same or similar RFI is not acceptable. RFI's that are similar should be addressed in Project meetings where the requestor (Contractor, Subcontractor or vendor) is able to address the particular issue with the Architect or Engineer and a resolution addressed in the minutes.

7.4.1.3 A RFI response applicable to a specific area cannot be extended to other situations unless specifically addressed in writing within the RFI or in a separate RFI.

7.4.1.4 RFI's should provide a proposed solution and should adequately describe the problem that has arisen.

7.4.2 Scope

The RFI shall reference all the applicable Contract Documents including Specification section, detail, page numbers, Drawing numbers, and sheet numbers, etc. The Contractor shall make suggestions and interpretations of the issue raised by the RFI. An RFI cannot modify the Contract Cost, Contract Time, or the Contract Documents.

7.4.3 Response Time

The Architect must respond to a RFI within a reasonable time after receiving such request. If the Architect's response results in a change in the Work, then such change shall be effected by a written CO, COR RFP or ICD, if appropriate. If the Architect cannot respond to the RFI within a reasonable time, the Architect shall notify the Contractor, with a copy to the Inspector and the District, of the amount of time that will be required to respond.

7.4.4 Costs Incurred

The Contractor shall be responsible for any costs incurred for professional services as more fully set forth in Article 4.5, which shall be subject to a Deductive Change Order, if an RFI requests an interpretation or decision of a matter where the information sought is equally available to the party making such request. District, at its sole discretion, shall issue a Deductive Change Order to Contractor for all such professional services arising from this Article.

7.5 REQUEST FOR PROPOSAL ("RFP")

7.5.1 Definition

A RFP is a written request prepared by the Architect (and/or CM) requesting the Contractor to submit to the District and the Architect an estimate of the effect of a proposed change on the Contract Price and (if applicable) the Contract Time. If Architect issues a Bulletin, the Changed items in the Bulletin shall be addressed as an RFP and all responses shall be prepared to a Bulletin as addressed in this Article 7.5. A form RFP is included in the Division 1 documents.

7.5.2 Scope

A RFP shall contain adequate information, including any necessary Drawings and Specifications, to enable Contractor to provide the cost breakdowns required by Article 7.7. The Contractor shall not be entitled to any Additional Compensation for preparing a response to an RFP, whether ultimately accepted or not.

7.5.3 Response Time

Contractor shall respond to an RFP within ten (10) days or the time period otherwise set forth in the RFP.

7.6 CHANGE ORDER REQUEST ("COR")

7.6.1 Definition

A COR is a written request prepared by the Contractor supported by backup documentation requesting that the District and the Architect issue a CO based upon a proposed change, cost, time, or cost and time that may be incurred on the Project or arising from an RFP, ICD, or CCD.

7.6.2 Changes in Price

A COR shall include breakdowns per Article 7.7 to validate any change in Contract Price due to proposed change or Claim.

7.6.3 Changes in Time

A COR shall also include any additional time required to complete the Project only if the delay is a critical path delay. Any additional time requested shall not be the number of days to make the proposed change, but must be based upon the impact to the Project Schedule as defined in Article 8. A schedule fragnet showing the time delay must be submitted with the COR. Any changes in time will be granted only if there is an impact to the critical path. If Contractor fails to request a time extension in a COR, then the Contractor is thereafter precluded from requesting or claiming a delay.

7.7 COST OF CHANGE ORDERS

7.7.1 Scope

Within ten (10) days after a request is made for a change that impacts the Contract Sum as defined in Article 9.1, the critical path, or the Contract Time as defined in Article 8.1.1, the Contractor shall provide the District and the Architect, with a written estimate of the effect of the proposed CO upon the Contract Sum and the actual cost of construction, which shall include a complete itemized cost breakdown of all labor and material showing actual quantities, hours, unit prices, and wage rates required for the change, and the effect upon the Contract Time of such CO. Changes may be made by District by an

appropriate written CO, or, at the District's option, such changes shall be implemented immediately upon the Contractor's receipt of an appropriate written Construction Change Document.

District may, as provided by law and without affecting the validity of this Agreement, order changes, modification, deletions and extra work by issuance of written CO or CCD from time to time during the progress of the Project, Contract Sum being adjusted accordingly. All such Work shall be executed under conditions of the original Agreement except that any extension of time caused thereby shall be adjusted at time of ordering such change. District has discretion to order changes on a "time and material" basis with adjustments to time made after Contractor has justified through documentation the impact on the critical path of the Project.

7.7.1.1 *Time and Material Charges.* If the District orders Work on a "time and material" basis, timesheets shall be signed daily by the Inspector or District Representative at or near the time the Work is actually undertaken and shall show the hours worked, and the Work actually completed. No time sheets shall be signed the next day. A copy shall be provided to the Person signing the document at the time the document is signed, but not before 10 am the following day.

7.7.2 Determination of Cost

The amount of the increase or decrease in the Contract Price from a CO or COR, if any, shall be determined in one or more of the following ways as applicable to a specific situation:

a. Mutual acceptance of a lump sum properly itemized and supported by sufficient substantiating data to permit evaluation. If an agreement cannot be reached within fifteen (15) days after submission and negotiation of Contractor's proposal, Contractor may submit pursuant to Article 7.7.3. Submission of sums which have no basis in fact are at the sole risk of Contractor and may be a violation of the False Claims Act set forth under Government Code section 12650 et seq.);

   1. If the District objects to 7.7.2(a) as a method for submission due to inaccuracies in the submitted amount, overstatement of manpower or time required to perform the CO, or unreliability of the data provided, the District may either have the Architect or a professional estimator determine the cost for the CO, and the applicable time extension, or the Contractor shall utilize Article 7.7.2(d) or 7.7.3.

   2. Once the District provides a written objection to use of Article 7.7.2(a) due to unreliability of the estimated price, the Contractor shall no longer utilize mutual acceptance of a lump sum as a method for submission of CO's and shall provide a breakdown of estimated or actual costs pursuant to Article 7.7.2(d) or 7.7.3

b. By unit prices contained in Contractor's original bid and incorporated in the Project documents or fixed by subsequent agreement between District and Contractor;

c. Cost to be determined in a manner agreed upon by the parties and a mutually acceptable fixed or percentage fee. However, in the case of disagreement, Contractor must utilize the procedure under Article 7.7.3; or

d. By cost of material and labor and percentage of overhead and profit. If the value is determined by this method the following requirements shall apply:

1. *Basis for Establishing Costs*

(1) Labor will be the cost for wages prevailing locally for each craft or type of workers at the time the extra Work is done, plus employer payments of payroll taxes and workers compensation insurance (exclude insurance costs as part of the overhead and profit mark-up), health and welfare, pension, vacation, apprenticeship funds, and other direct costs resulting from Federal, State, or local laws, as well as assessments or benefits required by lawful collective bargaining agreements. In no case shall the total labor costs exceed the applicable prevailing wage rate for that particular classification. The use of a labor classification which would increase the extra Work cost will not be permitted unless the Contractor establishes the necessity for such additional costs. Labor costs for equipment operators and helpers shall be reported only when such costs are not included in the invoice for equipment rental.

(2) Materials shall be at invoice or lowest current price at which such materials are locally available and delivered to the Site in the quantities involved, plus sales tax, freight, and delivery. The District reserves the right to approve materials and sources of supply or to supply materials to the Contractor if necessary for the progress of the Work. No markup shall be applied to any material provided by the District.

(3) Tool and Equipment Rental. No payment will be made for the use of tools which have a replacement value of $250 or less.

Regardless of ownership, the rates to be used in determining equipment rental costs shall not exceed listed rates prevailing locally at equipment rental agencies or distributors at the time the Work is performed. Rates applied shall be appropriate based on actual equipment need and usage. Monthly, weekly or other extended use rates that results in the lowest cost shall be applied if equipment is used on site for extended periods.

The rental rates paid shall include the cost of fuel, oil, lubrication, supplies, small tools, necessary attachments, repairs and maintenance of any kind, depreciation, storage, insurance, and all incidentals.

Necessary loading and transportation costs for equipment used on the extra Work shall be included. If equipment is used intermittently and, when not in use, could be returned to its rental source at less expense to the District than holding it at the Work Site, it shall be returned unless the Contractor elects to keep it at the Work Site at no expense to the District.

All equipment shall be acceptable to the Inspector, in good working condition, and suitable for the purpose for which it is to be used. Manufacturer's ratings and modifications shall be used to classify equipment, and equipment shall be powered by a unit of at least the minimum rating recommended by the manufacturer.

If tool and equipment charges are part of a Dispute or Claim, the District reserves the right to utilize actual costs for tools and equipment or a depreciation rate for equipment based on audit finding under Article 13.11 and deduct any rental charges that exceed actual or depreciated costs.

e. Other Items. The District may authorize other items which may be required on the extra work. Such items include labor, services, material, and equipment which are different in their nature from those required by the Work, and which are of a type not ordinarily available from the Contractor or any of the Subcontractors. Invoices covering all such items in detail shall be submitted with the request for payment.

f. Invoices. Vendors' invoices for material, equipment rental, and other expenditures shall be submitted with the COR. If the request for payment is not substantiated by invoices or other documentation, the District may establish the cost of the item involved at the lowest price which was current at the time of the Daily Report.

g. Overhead. Overhead, including direct and indirect costs, shall be submitted with the COR and include: field overhead, home office overhead, off-site supervision, CO preparation/negotiation/research, time delays, Project interference and disruption, additional guaranty and warranty durations, on-site supervision, additional temporary protection, additional temporary utilities, additional material handling costs, liability and property damage insurance, and additional safety equipment costs.

7.7.3 Format for COR or CO's

The following format shall be used as applicable by the District and the Contractor to communicate proposed additions to the Contract. All costs submitted shall be actual costs and labor shall be unburdened labor. Refer to Division 1 for a copy of the Construction Change Order form.

		EXTRA	CREDIT
(a)	Material (attach itemized quantity and unit cost plus sales tax)	_____	_____
(b)	Labor Not to Exceed Applicable Prevailing Wage Rates (attach itemized hours and rates)	_____	_____
(c)	Equipment (attach invoices)	_____	_____
(d)	Subtotal	_____	_____

		EXTRA	CREDIT
(e)	If Subcontractor performed work, add Subcontractor's overhead and profit to portions performed by Subcontractor, not to exceed 10% of item (d).		
(f)	Subtotal		
(g)	Contractor's Overhead and Profit: Not to exceed 10% of Item (d) if Contractor performed the work. No more than 5% of Item (d) if Subcontractor performed the work. If work was performed by Contractor and Subcontractors, portions performed by Contractor shall not exceed 10% of Item (d), and portions performed by Subcontractor shall not exceed 10% of Item (d).		
(h)	Subtotal		
(i)	Bond not to exceed one percent (1%) of Item (h)		
(k)	TOTAL		
(l)	Time/ Days		

The undersigned Contractor approves the foregoing Change Order or Immediate Change Directive as to the changes, if any, and the Contract price specified for each item and as to the extension of time allowed, if any, for completion of the entire Work on account of said Change Order or Immediate Change Directive, and agrees to furnish all labor, materials and service and perform all Work necessary to complete any additional Work specified therein, for the consideration stated herein. It is understood that said Change Order or Immediate Change Directive shall be effective when approved by the Governing Board of the District.

It is expressly understood that the value of such extra Work or changes, as determined by any of the aforementioned methods, expressly includes any and all of the Contractor's costs and expenses, both direct and indirect, resulting from additional time required on the Project or resulting from delay to the Project. Any costs, expenses, damages or time extensions not included are deemed waived.

The Contractor expressly acknowledges and agrees that any change in the Work performed shall not be deemed to constitute a delay or other basis for claiming additional compensation based on theories including, but not limited to, acceleration, suspension or disruption to the Project.

7.7.3.1 *Adjustment for Time and Compensable Delay*. A CO shall also include any additional time required to complete the Project. Any additional time requested shall not be the number of days to make the proposed change, but must be based upon the impact to the Project Schedule as defined

in Article 8 of the General Contract. A schedule fragnet showing the time delay must be submitted with the CO. Any changes in time will be granted only if there is an impact to the critical path. If Contractor fails to request a time extension in a CO, then the Contractor is thereafter precluded from requesting or claiming a delay.

7.7.4 Deductive Change Orders

All Deductive Change Order(s) must be prepared utilizing the form under Article 7.7.3 (a) – (d) only, setting forth the actual costs incurred. Except in the case of an Article 2.2 or 9.6 Deductive Change Order where no mark-up shall be allowed, Contractor will be allowed a maximum of 5% total profit and overhead.

For unilateral Deductive Change Orders, or where credits are due from Contractor for Allowances, Deductive Items, Inspection, Damage, DSA CCD review costs, Architect or Inspector costs for after hours or corrective services, Work removed from the Agreement under Article 2.2 or Article 9.6, there shall be no mark-up.

District may, any time after a Deductive Change Order is presented to Contractor by District for items under Article 2.2 or Article 9.6 or if there is disagreement as to the Deductive Change Order, issue a unilateral Deductive Change Order on the Project and deduct the Deductive Change Order from a Progress Payment, Final Payment, or Retention.

7.7.5 Discounts, Rebates, and Refunds

For purposes of determining the cost, if any, of any change, addition, or omission to the Work hereunder, all trade discounts, rebates, refunds, and all returns from the sale of surplus materials and equipment shall accrue and be credited to the Contractor, and the Contractor shall make provisions so that such discounts, rebates, refunds, and returns may be secured, and the amount thereof shall be allowed as a reduction of the Contractor's cost in determining the actual cost of construction for purposes of any change, addition, or omissions in the Work as provided herein. All CO's are subject to Audit under Article 13.11 for discounts, rebates and refunds.

7.7.6 Accounting Records

With respect to portions of the Work performed by CO's and CCD's on a time-and-materials, unit-cost, or similar basis, the Contractor shall keep and maintain cost-accounting records in a format consistent with accepted accounting standards and satisfactory to the District, which shall be available to the District on the same terms as any other books and records the Contractor is required to maintain under the Contract Documents.

Any time and material charges shall require Inspector's signature on time and material cards showing the hours worked and the Work actually completed. (See Article 7.7.1.1)

7.7.7 Notice Required

If the Contractor desires to initiate a Dispute or Claim for an increase in the Contract Price, or any extension in the Contract Time for completion, Contractor shall notify the applicable party responsible for addressing the Dispute or Claim pursuant to Article 4.6. No Claim or Dispute shall be considered unless made in accordance with this subparagraph. Contractor shall proceed to execute the

Work even though the adjustment may not have been agreed upon. Any change in the Contract Price or extension of the Contract Time resulting from such Claim shall be authorized by a CO.

7.7.8 Applicability to Subcontractors

Any requirements under this Article 7 shall be equally applicable to CO's, COR's or ICD's issued to Subcontractors by the Contractor to the same extent required by the Contractor.

7.7.9 Alteration to Change Order Language

Contractor shall not alter or reserve time in COR's, CO's or ICD's. Contractor shall execute finalized CO's and proceed under Article 7.7.7 and Article 4.6 with proper notice. If Contractor intends to reserve time without an approved CPM schedule prepared pursuant to Article 8 or without submitting a fragnet showing delay to critical path, then Contractor may be prosecuted pursuant to the False Claim Act.

7.8 ALLOWANCES

7.8.1: Owner Controlled Allowances

Allowances added to the base bid value are Owner controlled, any use of these funds must be authorized and approved by the District prior to any work that is considered an Allowance expense being performed. All unused Allowance funds remaining at the end of the Project will be returned to the District in the full amount that remains.

ARTICLE 8
TIME AND SCHEDULE

8.1 DEFINITIONS

8.1.1 Contract Time

Contractor shall perform and reach Substantial Completion (See Article 1.1.46) within the time specified in the Agreement Form. Moreover, Contractor shall perform its Work in strict accordance with the Project Milestones in the Contract Documents and shall proceed on a properly developed and approved Baseline Schedule, which represents the Contractor's view of the practical way in which the Work will be accomplished. Note that Contract Time includes and incorporates all Float and other Baseline inclusions as noted in Article 8.3.2.1 and as otherwise specifically noted in Article 8.

8.1.2 Notice to Proceed

District may give a Notice to Proceed within ninety (90) days of the award of the bid by District. Once Contractor has received the notice to proceed, Contractor shall complete the Work in the period of time referenced in the Contract Documents.

In the event that District desires to postpone the giving of the Notice to Proceed beyond this three-month period, it is expressly understood that with reasonable notice to the Contractor, the giving of the date to proceed may be postponed by District. It is further expressly understood by Contractor, that Contractor shall not be entitled to any claim of additional compensation as a result of the postponement of the giving of the notice to proceed

If the Contractor believes that a postponement will cause a hardship to Contractor, Contractor may terminate the Contract with written notice to District within 10 days after receipt by Contractor of District's notice of postponement. It is further understood by Contractor that in the event that Contractor terminates the Contract as a result of postponement by the District, the District shall only be obligated to pay Contractor for the Work that Contractor had performed at the time of notification of postponement and the grounds for notification and hardship shall be subject to Audit pursuant to Article 13.11. Should Contractor terminate the Contract as a result of a notice of postponement, District may award the Contract to the next lowest responsible bidder.

8.1.3 Computation of Time

The term "day" as used in the Contract Documents shall mean calendar day unless otherwise specifically defined.

8.1.4 Float

Float is time the total number of days an activity may be extended or delayed without delaying the Completion Date shown in the schedule. Float will fall into three categories: (1) Rain Days; (2) Governmental Delays; and, (3) Project Float. Project Float and Rain Days are owned by the Project and may be utilized as necessary for critical path delays once the days become available for consumption (i.e. the Rain Day arrives and is not utilized since rain did not occur or Work was performed on the interior of a building). However, Governmental Delay float shall not be utilized for purposes other than to address critical path delays that arise due to approvals, Inspector approvals or verifications on governmental forms.

8.1.4.1 *Governmental Delay Float*. It is anticipated that there will be governmental generated delays. Specific to DSA approvals, it is anticipated that no less than twelve (12) days per calendar year shall be set aside as Governmental Float to be utilized on critical path delays. A pro-rated number of days shall be calculated based on length of Contract Time. (For example, a two (2) year Contract Time shall require twenty-four (24) days of Governmental Float. If the Contract Time is 182 days, then the Contract Time shall require six (6) days of Governmental Float) This Governmental Delay float must be incorporated into the schedule and should be incorporated in each critical activity as Contractor deems fit. Specifically, major categories of Work under the DSA 152 (Project Inspection Card) should be allocated Governmental Delay Float at the Contractor's discretion. Governmental Delay Float on the Project may exceed 12 days per one (1) year period, but Contractor is required to include not be less than 12 days of Governmental Delay Float during each one (1) year period.

Contractor's failure to establish a protocol for requesting inspections is not grounds to utilize Governmental Delay Float. As noted in Article 3.1.4, 48 hours advance notice of commencing Work on a new area is required after submitting form DSA 156 and under PR 13-01 Special Inspection reports are not required to be posted until at least 14 days after the Work was inspected. Failure to plan, and pay (if applicable) for quicker delivery of Special Inspections is not Governmental Delay Float under Article 8.1.4.1. If Governmental Delay Float is not utilized, this float is carried through to other DSA 152 categories of inspection and consumed over the course of the Project

Governmental Delay Float may be utilized for a DSA Stop Work Order regardless of fault as defined under Education Code section 17307.5(b).

8.1.4.2 *Inclement Weather (Rain Days)*. The Contractor will only be allowed a time extension for unusually severe weather if it results in precipitation or other conditions which in the amount, frequency, or duration is in excess of the norm at the location and time of year in question as established by NOAA weather data. No less than 22 calendar days for each calendar year for Southern California will be allotted for in the Contractor's schedule for each winter weather period or carried at the end of the schedule as Rain Float. Float for weather days in other geographical regions shall be adjusted based on NOAA weather data for the geographical location. Contractor has anticipated all the days it takes to dry out and re-prepare areas that may be affected by weather delays which extend beyond the actual weather days. The weather days shall be shown on the schedule and if not used will become float for the Project's use. The Contractor will not be allowed a day-for-day weather delay for periods noted as float in the Schedule. The Contractor is expected to work seven (7) days per week (if necessary, irrespective of inclement weather), to maintain access, and to protect the Work under construction from the effects of inclement weather. Additional days beyond the NOAA shall be considered under the same criteria that weather days are granted below.

A Rain Day shall be granted by Architect or CM if the weather prevents the Contractor from beginning Work at the usual daily starting time, or prevents the Contractor from proceeding with seventy-five (75%) of the normal labor and equipment force towards completion of the day's current controlling item on the accepted schedule for a period of at least five hours, and the crew is dismissed as a result thereof, the Architect will designate such time as unavoidable delay and grant one (1) critical path activity calendar-day extension if there is no available float for the calendar year.

8.1.4.3 *Project Float*. The Contractor may determine some activities require a lesser duration than allocated and may set aside float in the Project Schedule. There shall be no early completion. Instead, to the extent float is either addressed at the end of the Project or throughout each category of critical path work, Project float may be used as necessary during the course of the Project and allocated on a first,

come first serve basis. However, the use of float does not extend to Governmental Delay Float, which shall only be used for Governmental Delays.

8.2 HOURS OF WORK

8.2.1 Sufficient Forces

Contractors and Subcontractors shall continuously furnish sufficient forces to ensure the prosecution of the Work in accordance with the Construction Schedule.

8.2.2 Performance During Working Hours

Work shall be performed during regular working hours as permitted by the appropriate governmental agency except that in the event of an emergency, or when required to complete the Work in accordance with job progress, Work may be performed outside of regular working hours with the advance written consent of the District and approval of any required governmental agencies.

8.2.3 Costs for After Hours Inspections

If the Work done after hours is required by the Contract Documents, a Recovery Schedule, or as a result of the Contractor's failure to plan, and inspection must be conducted outside the Inspector's regular working hours, the costs of any after hour inspections, shall be borne by the Contractor.

If the District allows the Contractor to do Work outside regular working hours for the Contractor's convenience, the costs of any inspections required outside regular working hours shall be invoiced to the Contractor by the District and a Deductive Change Order shall be issued from the next Progress Payment.

If the Contractor elects to perform Work outside the Inspector's regular working hours, costs of any inspections required outside regular working hours shall be invoiced to the Contractor by the District and a Deductive Change Order from the next Progress Payment as a Deductive Change Order.

8.3 PROGRESS AND COMPLETION

8.3.1 Time of the Essence

Time limits stated in the Contract Documents are of the essence to the Contract. By executing the Agreement, the Contractor confirms that the Contract Time is a reasonable period for performing the Work.

8.3.2 Baseline Schedule Requirements

8.3.2.1 *Timing*: Within ten (10) calendar days after Notice to Proceed, Contractor shall submit a practical schedule showing the order in which the Contractor proposes to perform the Work, and the dates on which the Contractor contemplates starting and completing the salient categories of the Work. This first schedule which outlines the Contractor's view of the practical way in which the Work will be accomplished is the Baseline Schedule. If the Contractor Fails to submit the Baseline Schedule within the ten (10) days noted, then District may withhold processing and approval of progress payments pursuant to Article 9.4 and 9.6.

8.3.2.2 *District Review and Approval:* District, Architect and CM will review both a paper and electronic copy of Baseline Schedule and may provide comments as noted in this Article and either approve or disapprove the Baseline Schedule. All Schedules shall be prepared using an electronic scheduling program acceptable to District. All Schedules shall be delivered in an electronic format usable by the District. All logic ties and electronic information shall be included in the electronic copy of the Baseline Schedule that is delivered to the District.

8.3.2.3 *Schedule Must Be Within the Given Contract Time.* The Baseline Schedule shall not exceed time limits set forth in the Contract Documents and shall comply with all of the scheduling requirements as set forth in the Specifications and Contract Documents.

8.3.2.4 *Submittals Must Be Incorporated (See Articles 3.7 and 3.9)*: Contractor shall include Submittals as line items in the Baseline Schedule as required under Article 3.7.2 and 3.9.6. Submittals shall not delay the Work, Milestones, or the Completion Date. Failure to include Submittals in the Baseline Schedule shall be deemed a material breach by the Contractor.

8.3.2.5 *Float Must Be Incorporated*. The Baseline Schedule must indicate the beginning and completion of all phases of construction and shall use the "critical path method" (commonly called CPM) for the value reporting, planning and scheduling, of all Work required under the Contract Documents. The Baseline Schedule must incorporate all Milestones in the Project and apply Governmental Float at each Milestone in the Contractor's discretion. The Baseline Schedule shall incorporate any Schedule provided by the District as part of the bid and shall note durations that will not be adequate or should be shortened based on Contractor's review. These changes shall be identified and incorporated into Contractor's Baseline Schedule as long as requested changes are made within 10 days after the District chooses to move forward with the Project. Scheduling is necessary for the District's adequate monitoring of the progress of the Work and shall be prepared in accordance with the time frame described in this Article 8. The Architect may disapprove of any Schedule or require modification to it if, in the opinion of the Architect or District, adherence to the any Schedule prepared by the Contractor will not cause the Work to be completed in accordance with the Agreement.

8.3.2.6 *No Early Completion.* Contractor shall not submit any Schedule showing early completion without indicating float time through the date set for Project completion by District. Contractor's Baseline Schedule shall account for all days past early completion as float which belongs to the Project. Usage of float shall not entitle Contractor to any delay Claim or damages due to delay.

8.3.2.7 *Use of Schedule Provided in Bid Documents.* In some cases, the bid will include a preliminary schedule indicating Milestones and construction sequences for the Project along with general timing for the Project. The preliminary schedule is not intended to serve as the Baseline Schedule utilized for construction. It is up to the Contractor to study and develop a Baseline Schedule to address the actual durations and sequences of Work that is anticipated while maintaining the Milestones provided by the District. Contractor shall obtain information from Contractor's Subcontractors and vendors on the planning, progress, delivery of equipment, coordination, and timing of availability of Subcontractors so a practical plan of Work is fully developed and represented in the Baseline Schedule.

8.3.2.8 *Incorrect Logic, Durations, Sequences, or Critical Path.* The District may reject or indicate durations, sequences, critical path or logic are not acceptable and request changes. The electronic copy of the Baseline Schedule shall have adequate information so logic ties, duration, sequences and critical path may be reviewed electronically. Contractor is to diligently rebuild and resubmit the Baseline Schedule to represent the Contractor's plan to complete the Work and maintain Milestones at the

next progress meeting, or before the next progress meeting. If Contractor is not able to build a Baseline Schedule that is acceptable to the District or Architect, the District reserves the right to utilize the unapproved originally submitted Baseline Schedule (See Article 8.3.2.12) and the comments submitted to hold Contractor accountable for timely delivery of Work and maintenance of Milestones. Furthermore, Contractor's representations in the Baseline Schedule, if unacceptable, may also be used as a basis for termination of the Contract under Article 14 if Contractor fails to adequately maintain the Schedule and falls significantly behind without undertaking the efforts to either submit and follow a Recovery Schedule or fail to submit a Recovery Schedule and make no effort toward recovery on the Project.

8.3.2.9 *Contractor Responsibility Even if Schedule Issues Are Not Discovered.* Failure on the Part of the District to discover errors or omissions in any Schedules submitted shall not be construed to be an approval of the error or omission and any flawed Schedule is not grounds for a time extension.

8.3.2.9 Inclusions in Baseline Schedule. In addition to scheduling requirements set forth at Article 8.3.2, Contractor is specifically directed to include (broken out separately) in Contractor's Baseline Schedule and all Schedule updates, the following items required pursuant to these General Conditions, including but not limited to:

1. Rain Day Float (excluding inclement weather) as required under Article 8.1.4.2. For example, if the NOAA provides 22 days of Rain Days, all 22 days must be incorporated and noted in the Baseline Schedule. Further, any days required to clean-up or dry out shall be included for operations that are likely to require a clean-up or dry out period. Days that are not utilized shall be considered float owned by the Project.

2. Governmental Delay Float under Article 8.1.4.1. This Governmental Delay Float shall only be utilized for Governmental Delays and shall not be considered available float owned by the Project. This float shall only be distributed to the Project upon the completion of the Project and shall be used to offset Liquidated Damages and shall not generate compensable delays.

3. Submittal and Shop Drawing schedule under Article 3.9.

4. Deferred Approvals under Article 3.9.

5. Time for separate contractors, including furniture installation and start up activities, under Article 6.1.

6. Coordination and timing of any Drawings, approvals, notifications, permitting, connection, and testing for all utilities for the Project. (See Article 2.1.4).

7. Testing, special events, or school activities

8.3.2.10 *Failure to include Mandatory Schedule Items*. District may withhold payment pursuant to Articles 9.3, 9.4 and 9.6. In lieu of withholding payment for failure to include Mandatory Schedule Items, after the District or Architect has notified the Contractor of failure to meet the Baseline

Schedule or Updated Schedule requirements and provided a written notification of this failure and provided a written notice of Schedule preparation errors, and the Contractor fails to correct the noted deficiencies or the Contractor does not provide an updated Baseline Schedule correcting the deficiencies, then Contractor shall not be granted an extension of time for failure to obtain necessary items and approvals under Article 8.3.2 and for the time required for failure to comply with laws, building codes, and other regulations (including Title 24 of the California Code of Regulations). Contractor shall maintain all required Article 8.3.2 Schedule items in the Baseline Schedule and indicate any days that have been used as allowed in Article 8. If Contractor fails to include all Article 8.3.2items in its Baseline Schedule or Schedule Updates and the District either utilizes an Unapproved Schedule under Article 8.3.2.12 or does not object to the inclusion of required scheduling items, then all mandatory Schedule inclusions, including float, shall be utilized in the District's discretion. If the Contract Time is exceeded, then Contractor shall be subject to the assessment of Liquidated Damages pursuant to Article 8.4.

8.3.2.11 *Failure to Meet Requirements*. Failure of the Contractor to provide proper Schedules as required by this Article and Article 9 is a material breach of the Contract and grounds for Termination pursuant to Article 14. The District, at its sole discretion, may choose, instead, to withhold, in whole or in part, any Progress Payments or Retention amounts otherwise payable to the Contractor.

8.3.2.12 *Use of an Unapproved Baseline Schedule*. If the Baseline Schedule submitted by the Contractor is unacceptable to the District (i.e. failing to meet the requirements of Article 8.3.2) and Contractor does not incorporate or address the written comments to the Baseline Schedule and a Baseline Schedule is not approved, but due to extreme necessity, the District moves forward without an approved Baseline Schedule, Contractor shall diligently revise and meet Schedule update requirements of Article 8 and incorporate all Article 8.3.2 comments in all updates). However, for purposes of Termination pursuant to Article 14, the unapproved Baseline Schedule initially submitted shall be treated as the Baseline Schedule with durations shortened or revised to accommodate all float, all mandatory Schedule requirements under Article 8.3.2, any requirements in the Contract Documents, and all revisions by the District or Architect.

8.3.3 Update Schedules

8.3.3.1 *Updates Shall Be Based on Approved Baseline Schedule*. Except in the case where there has not been agreement as to a Baseline Schedule, the approved Baseline Schedule shall be used to build future Schedule updates. Schedule updates shall be a CPM based Schedule consistent with the Baseline Schedule requirements of 8.3.2

In the case that no Baseline has been approved, Schedule updates shall be provided monthly and each update shall incorporate all comments and revisions noted as not complying with the requirements of Article 8.3.2. Contractor shall be held to the Article 8.3.2.12 unapproved Baseline Schedule, inclusive of all Milestones, float, comments and revisions by the District and Architect, all required Baseline Schedule Inclusions under Article 8.3.2, and any requirements in the Contract Documents.

8.3.3.2 *Schedule Updates*. Contractor shall update the approved Schedule each month to address actual start dates and durations, the percent complete on activities, actual completion dates, estimated remaining duration for the Work in progress, estimated start dates for Work scheduled to start at future times and changes in duration of Work items

8.3.3.3 *Listing of Items Causing Delays*. Schedule updates shall provide a listing of activities which are causing delay in the progress of Work and a narrative shall be provided showing a

description of problem areas, anticipated delays, and impacts on the Construction Schedule. Simply stating "District Delay" or "Architect Delay" shall be an inadequate listing. Delays shall only be listed if they meet the requirements of Article 8.4.

8.3.3.4 *Recovery Schedule*. In addition to providing a schedule update every thirty (30) days, the Contractor, if requested by the Architect or District, shall take the steps necessary to improve Contractor's progress and demonstrate to the District and Architect that the Contractor has seriously considered how the lost time, the Completion Date, or the Milestones that are required to be met within the terms of the Contract. Contractor shall immediately provide a Recovery Schedule showing how Milestones and the Completion Date will be met. In no case, shall a Recovery Schedule be provided later than ten (10) days following the request for a Recovery Schedule from the Architect or District.

a. Failure to Provide a Recovery Schedule. Shall subject Contractor to the assessment of Liquidated Damages for failure to meet the Contract Time. Refusal or failure to provide a Recovery Schedule shall be considered a substantial failure of performance and a material breach of Contract and may result in Termination of the Contract pursuant to Article 14.

b. Recovery Schedule Acceleration without Additional Cost. The District may require Contractor prepare a Recovery Schedule showing how the Project shall be accelerated, without any additional cost to the District. The District may order, without additional cost, the following:

1. Increase the number of shifts;

2. Utilize overtime to recover the approved Schedule; and/or

3. Increase the days when Work occurs, including weekends, at the Project and at any manufacturer's plant.

c. Recovery Schedule Acceleration without Additional Cost. If Contractor disputes that the Recovery Schedule acceleration shall be issued without additional costs, the Contractor shall submit concurrent with Recovery Schedule acceleration notice pursuant to Articles 8.4.3 and 8.4.4.

8.4 EXTENSIONS OF TIME - LIQUIDATED DAMAGES

8.4.1 Liquidated Damages

CONTRACTOR AND DISTRICT HEREBY AGREE THAT THE EXACT AMOUNT OF DAMAGES FOR FAILURE TO COMPLETE THE WORK WITHIN THE TIME SPECIFIED IS EXTREMELY DIFFICULT OR IMPOSSIBLE TO DETERMINE. IF THE WORK IS NOT SUBSTANTIALLY COMPLETED IN THE TIME SET FORTH IN THE AGREEMENT, IT IS UNDERSTOOD THAT THE DISTRICT WILL SUFFER DAMAGES. IT BEING IMPRACTICAL AND UNFEASIBLE TO DETERMINE THE AMOUNT OF ACTUAL DAMAGE, IT IS AGREED THE CONTRACTOR SHALL PAY TO THE DISTRICT THE AMOUNT LIQUIDATED DAMAGES SET FORTH IN THE AGREEMENT, FOR EACH CALENDAR DAY OF DELAY IN REACHING SUBSTANTIAL COMPLETION (SEE ARTICLE 1.1.46). CONTRACTOR AND ITS SURETY SHALL

BE LIABLE FOR THE AMOUNT THEREOF PURSUANT TO GOVERNMENT CODE SECTION 53069.85.

8.4.2 Delay

Except and only to the extent provided under Article 7 and Article 8, by signing the Agreement, Contractor agrees to bear the risk of delays to Completion of the Work and that Contractor's bid for the Project was made with full knowledge of this risk.

In agreeing to bear the risk of delays to complete the Work, Contractor understands that, except and only to the extent provided otherwise in Article 7 and 8, the occurrence of events that delay the Work shall not excuse Contractor from its obligation to achieve Completion of the Project within the Contract Time, and shall not entitle the Contractor to an adjustment to the Contract time.

8.4.3 Excusable Delay

Contractor shall not be charged for Liquidated Damages because of any delays in completion of Work which are not the fault or negligence of Contractor or its Subcontractors, arising from Rain Float or Project Float, including acts of God, as defined in Public Contract Code section 7105, acts of enemy, epidemics and quarantine restrictions. Any approved delays caused by acts of God, as defined in Public Contract Code section 7105, acts of enemy, epidemics, pandemics, and quarantine restrictions (collectively, "Force Majeure Events") shall be deemed non-compensable excusable delays. Contractor shall within five (5) calendar days of beginning of any such delay notify District in writing of causes of delay; thereupon District shall ascertain the facts and extent of delay and grant extension of time for completing Work when, in its judgment, the findings of fact justify such an extension. Extensions of time shall apply only to that portion of Work affected by delay, and shall not apply to other portions of Work not so affected. An extension of time may only be granted after proper compliance with Article 8.3 requiring preparation and submission of a properly prepared CPM schedule.

8.4.3.1 *Excusable Delay Is Not Compensable*. No extended overhead, general conditions costs, impact costs, out-of-sequence costs or any other type of compensation, by any name or characterization, shall be paid to the Contractor for any delay to any activity not designated as a critical path item on the latest approved Project schedule or if caused by Force Majeure Events.

8.4.3.2 *Notification*. The Contractor shall notify the Architect in writing of any anticipated delay and its cause, in order that the Architect may take immediate steps to prevent, if possible, the occurrence or continuance of delay, and may determine whether the delay is to be considered avoidable or unavoidable, how long it continues, and to what extent the prosecution and completion of the Work might be delayed thereby.

8.4.3.3 *Extension Request*. In the event the Contractor requests an extension of Contract time for unavoidable delay, such request shall be submitted in accordance with the provisions in the Contract Documents governing changes in Work (See Article 7). When requesting time, i.e., extensions, for proposed Change Orders, they must be submitted with the proposed Change Order with full justification and documentation. If the Contractor fails to submit justification with the proposed Change Order it waives its right to a time extension at a later date. Such justification must be based on the official Contract schedule as updated at the time of occurrence of the delay or execution of Work related to any changes to the scope of Work. Blanket or general claims for extra days without specific detailed information as required herein

or a blanket or general reservation of rights do not fulfill the requirements of this Article and shall be denied. The justification must include, but is not limited to, the following information:

a. The duration of the activity relating to the changes in the Work and the resources (manpower, equipment, material, etc.) required to perform these activities within the stated duration.

b. Logical ties to the official Baseline Schedule or Approved Updated Schedule for the proposed changes and/or delay showing the activity/activities in the schedule whose start or completion dates are affected by the change and/or delay. (A fragnet of any delay of over ten (10) days must be provided.)

The Contractor and District understand and expressly agree that insofar as Public Contract Code section 7102 may apply to changes in the Work or delays under this Contract, the actual delays and damages, if any, and time extensions are intended to, and shall provide, the exclusive and full method of compensation for changes in the Work and construction delays.

8.4.4 Notice by Contractor Required

The Contractor shall within five (5) calendar days of beginning of any such delay notify the District in writing of causes of delay with justification and supporting documentation. In the case of a Recovery Schedule pursuant to Article 8.3.3.4, Contractor shall submit written notice concurrent with the Recovery Schedule. District will then ascertain the facts and extent of the delay and grant an extension of time for completing the Work when, in its judgment, the findings of fact justify such an extension. Extensions of time shall apply only to that portion of the Work affected by the delay and shall not apply to other portions of the Work not so affected.

Claims relating to time extensions shall be made in accordance with applicable provisions of Article 7.

8.4.4.1 *Adjustment for Compensable Delays*. The Schedule may be adjusted for a delay if, and only if, Contractor undertakes the following:

a. Contractor submits a timely COR or CO pursuant to the requirements of Article 7.

b. Contractor submits a fragnet showing the critical path delay caused by the COR, CO, Changed Condition, CCD, or ICD

c. Contractor has addressed all required float days in the Fragnet.

d. Contractor submits a complete breakdown of all costs incurred utilizing the format of Article 7.7.3

8.4.5 No Additional Compensation for Coordinating Governmental Submittals and the Resulting Work

CONTRACTOR HAS PLANNED ITS WORK AHEAD OF TIME AND IS AWARE THAT GOVERNMENTAL AGENCIES, SUCH AS THE GAS COMPANIES, ELECTRICAL UTILITY COMPANIES, WATER DISTRICTS AND OTHER AGENCIES MAY HAVE TO APPROVE

CONTRACTOR PREPARED DRAWINGS OR APPROVE A PROPOSED INSTALLATION. CONTRACTOR HAS INCLUDED DELAYS AND DAMAGES WHICH MAY BE CAUSED BY SUCH AGENCIES IN CONTRACTOR'S BID AND HAS INCLUDED ADEQUATE TIME IN THE CONTRACTOR'S BASELINE SCHEDULE. FAILURE TO ADEQUATELY PLAN AND SCHEDULE IS NOT A BASIS TO USE GOVERNMENTAL DELAY FLOAT.

8.4.6 District Right to Accelerate the Work

The District may direct the Contractor to meet schedule requirements when the Work has been delayed. The District shall compensate the Contractor for the additional costs incurred by acceleration to the extent that such costs are directly attributable to the acceleration and are incurred through no fault or negligence of the Contractor.

8.4.6.1 *Management of Acceleration*. Contractor acceleration shall not include Work that is part of the scope of Work detailed in the Plans and Specifications. Instead, the acceleration costs shall be premium or overtime and quantifiable additional work added to the Project meant to accelerate the Project. Contractor is directed to keep consistent crews on the Project so time can be tracked. If crews are circulated off the Project or crews brought in only for overtime, the District may be charged for Contract Work and not accelerated time. In such case, the District may object to the costs submitted.

8.4.6.2 *Costs for Acceleration*. Cost for Acceleration shall be supported by backup documentation, and time sheets signed by the Inspector for each day work has been performed, at or near the time when the Work was performed. A listing on the time sheet shall document all labor, materials and services utilized that day and provide areas of work, and amount of work performed. Contractor shall comply with submission requirements of Article 7.7.

ARTICLE 9
PAYMENTS AND COMPLETION

9.1 CONTRACT SUM

The Contract Sum or Contract Price is stated in the Agreement and, including authorized adjustments, is the total amount payable by the District to the Contractor for performance of the Work under the Contract Documents.

9.2 COST BREAKDOWN

9.2.1 Required Information

Contractor shall furnish the following:

a. Within ten (10) days after Notice to Proceed, a detailed breakdown of the Contract Price (hereinafter "Schedule of Values") for each Project, Site, building, Milestone or other meaningful method to measure the level of Project Completion as determined by the District shall be submitted as a Submittal for the Project.;

b. Within ten (10) days after the date of the Notice to Proceed, a schedule of estimated monthly payment requests due the Contractor showing the values and construction time of the various portions of the Work to be performed by it and by its Subcontractors or material and equipment suppliers containing such supporting evidence as to its correctness as the District may require;

c. Within ten (10) days after the date of the Notice to Proceed, address, telephone number, telecopier number, California State Contractors License number, classification and monetary value of all subcontracts for parties furnishing labor, material, or equipment for completion of the Project.

9.2.2 Information and Preparation of Schedule of Values

9.2.2.1 *Break Down of Schedule of Values*. Schedule of Values shall be broken down by Project, site, building, Milestone, or other meaningful method to measure the level of Project Completion as determined by the District.

9.2.2.2 *Based on Contractor Bid Costs.* The Schedule of Values shall be based on the costs from Contractor's bid to the District. However, the submission of the Schedule of Values shall not be front loaded so the Contractor is paid a greater value than the value of the Work actually performed and shall not shift funds from parts of the Project that are later to Work that is performed earlier.

9.2.2.3 Largest Dollar Value for Each Line Item. Identify Subcontractors and materials suppliers proposed to provide portions of Work equal to or greater than ten thousand dollars ($10,000) or one-half of one percent (0.5%) of their Contract Price, whichever is less.

9.2.2.4 *Allowances*. Any Allowances provided for in the Contract shall be a line item in the Schedule of Values.

9.2.2.5 *Labor and Materials Shall Be Separate*. Labor and Materials shall be broken into two separate line items unless specifically agreed in writing by the District.

9.2.3 District Approval Required

The District shall review all submissions received pursuant to Article 9.2 in a timely manner. All submissions must be approved by the District before becoming the basis of any payment.

9.3 PROGRESS PAYMENTS

9.3.1 Payments to Contractor

Unless there is a resolution indicating that the Work for the Project is substantially complex, within thirty-five (35) days after approval of the Request for Payment, Contractor shall be paid a sum equal to ninety-five percent (95%) of the value of the Work performed (as certified by Architect and Inspector and verified by Contractor) up to the last day of the previous month, less the aggregate of previous payments. In the case of a Project designated substantially complex, the sum paid to the Contractor shall be equal to ninety percent (90%) of the value of the Work performed (as certified by the Architect and Inspector and verified by Contractor). The value of the Work completed shall be the Contractor's best estimate. Work completed as estimated shall be an approximation or estimate only and no mistake, inaccuracy, error or falsification in said any approved estimate shall operate to release the Contractor, or any Surety upon any bond, from damages arising from such Work, or from the District's enforcement of each and every provision of this Contract including but not limited to the Performance Bond and Payment Bond. The District shall have the right to subsequently to correct any mistake, inaccuracy, error or falsification made or otherwise set forth in any approved Request for Payment and such correction may occur in any future Payment Application or in the Retention Payment to the Contractor. No Surety upon any bond shall be relieved, released or exonerated of its obligations under this Contract or any applicable bond when the District is unable to correct an overpayment to the Contractor due to any abandonment by the Contractor or termination by the District.

The Contractor shall not be entitled to have any payment requests processed, or be entitled to have any payment made for Work performed, so long as any lawful or proper direction given by the District concerning the Work, or any portion thereof, remains incomplete.

Notwithstanding anything to the contrary stated above, the Contractor may include in its Request for Payment the value of any structural steel, glue laminated beams, trusses, bleachers and other such custom-made materials prepared specifically for the Project and unique to the Project so long as all of the following requirements are satisfied:

a. The aggregate cost of materials stored off-site shall not exceed Twenty Five Thousand Dollars ($25,000) at any time or as otherwise agreed to be District in writing;

b. Title to such materials shall be vested in the District as evidenced by documentation satisfactory in form and substance to the District, including, without limitation, recorded financing statements, UCC filings and UCC searches;

c. With each Contractor Request for Payment, the Contractor shall submit to the District a written list identifying each location where materials are stored off-site

(which must be a bonded warehouse) and the value of the materials at each location. The Contractor shall procure insurance satisfactory to the District (in its reasonable discretion) for materials stored off-site in an amount not less than the total value thereof;

d. The consent of any Surety shall be obtained to the extent required prior to payment for any materials stored off-site;

e. Representatives of the District shall have the right to make inspections of the storage areas at any time; and

f. Such materials shall be: (1) protected from diversion, destruction, theft and damage to the reasonable satisfaction of the District; (2) specifically marked for use on the Project; and (3) segregated from other materials at the storage facility.

9.3.2 Purchase of Materials and Equipment and Cost Fluctuations

The Contractor is required to order, obtain, and store materials and equipment sufficiently in advance of its Work at no additional cost or advance payment from District to assure that there will be no delays. Contractor understands that materials fluctuate in value and shall have adequately addressed market fluctuations through agreements with Contractor vendors or by other means. Contractor further understands and incorporates into Contractor's bid cost any wage rate increases during the Project for the Contractor's labor force as well as all other Subcontractor and vendor labor forces. District shall not be responsible for market fluctuations in costs or labor rate increases during the Project. Contractor further has incorporated any and all cost increases in areas of Work where there may be schedule variations so that cost increases are not passed through to the District.

9.3.3 No Waiver

No payment by District hereunder shall be interpreted so as to imply that District has inspected, approved, or accepted any part of the Work. Contractor specifically understands that Title 24 Section 4-343 which states:

> "It is the duty of the contractor to complete the work covered by his or her contract in accordance with the approved Plans and Specifications therefore. The contractor in no way is relieved of any responsibility by the activities of the Architect, Engineer, Inspector or DSA in the performance of such duties... In no case, however, shall the instruction of the Architect or registered Engineer be construed to cause work to be done with is not in conformity with the approved Plans, Specifications, and change orders..."

Notwithstanding any payment, the District may enforce each and every provision of this Contract which includes, but is not limited to, the Performance Bond and Payment Bond. The District may correct any error subsequent to any payment. In no event shall the Contractor or the Surety be released or exonerated from performance under this Contract when the District overpays the Contractor based upon any mistake, inaccuracy, error or falsification in any estimate that is included in any Request for Payment.

9.3.4 Issuance of Certificate of Payment

The Architect shall, within seven (7) days after receipt of the Contractor's Application for Payment, either approve such payment or notify the Contractor in writing of the Architect's reasons for withholding approval in whole or in part as provided in Article 9.6. The review of the Contractor's Application for Payment by the Architect is based on the Architect's observations at the Project and the data comprising the Application for Payment that the Work has progressed to the point indicated and that, to the best of the Architect's knowledge, information, and belief, the quality of the Work is in accordance with the Contract Documents. In some cases, the Architect may act upon or rely on the evaluation of the Work by the Inspector. This review of Payment Applications is sometimes called a "Pencil Draft." District's return of a Pencil Draft shall constitute the District's dispute of the Payment Application that has been submitted. Contractor shall promptly respond to Pencil Drafts or Contractor's Payment Applications may be delayed. Contractor's failure to promptly respond to a Pencil Draft shall qualify as a delay in the prompt payment of a Request for Payment or Request for Retention. The foregoing representations are subject to: (1) an evaluation of the Work for conformance with the Contract Documents, (2) results of subsequent tests and inspections, (3) minor deviations from the Contract Documents correctable prior to completion, and (4) specific qualifications expressed by the Architect. The issuance of a Certificate for Payment will further constitute the Contractor's verified representation that the Contractor is entitled to payment in the amount certified.

9.3.5 Payment of Undisputed Contract Payments

In accordance with Public Contract Code section 7100, payments by the District to the Contractor for any and all undisputed amounts (including all Progress Payments, Final Payments or Retention Payment) is contingent upon submission of a proper and accurate Payment Application and the Contractor furnishing the District with a release of all Claims against the District related to such undisputed amounts. Disputed Contract Claims in stated amounts may be specifically excluded by the Contractor from the operation of the release. If, however, the Contractor specifically excludes any Claims, the Contractor shall provide details such as a specific number of disputed days or costs of any such exclusion in accordance with Articles 4.6 and 7.7.

9.4 APPLICATIONS FOR PROGRESS PAYMENTS

9.4.1 Procedure

9.4.1.1 *Application for Progress.* On or before the fifth (5th) day of each calendar month during the progress of the Work, Contractor shall submit to the Architect an itemized Application for Progress Payment for operations completed. Such application shall be notarized, if required, and supported by the following or such portion thereof as Architect requires:

1. The amount paid to the date of the Payment Application to the Contractor, to all its Subcontractors, and all others furnishing labor, material, or equipment for its Contract;

2. The amount being requested under the Payment Application by the Contractor on its own behalf and separately stating the amount requested on behalf of each of the Subcontractors and all others furnishing labor, material, and equipment under the Contract;

3. The balance that will be due to each of such entities after said payment is made;

4. A certification that the As-Built Drawings and Annotated Specifications are current;

5. Itemized breakdown of Work done for the purpose of requesting partial payment;

6. An updated or approved Baseline Schedule or other Schedule updates in conformance with Article 8;

7. Failure to submit an updated Schedule for the month or any previous month;

8. The additions to and subtractions from the Contract Price and Contract Time;

9. A summary of the Retention held;

10. Material invoices, evidence of equipment purchases, rentals, and other support and details of cost as the District may require from time to time;

11. The percentage of completion of the Contractor's Work by line item;

12. An updated Schedule of Values from the preceding Application for Payment;

13. Prerequisites for Progress Payments; and

14. Any other information or documents reasonably requested by the District, Architect, Inspector or CM (if applicable).

9.4.1.2 *First Payment Request.* The following items, if applicable, must be completed before the first payment request will be accepted for processing:

1. Installation of the Project sign;

2. Receipt by Architect of Submittals;

3. Installation of field office;

4. Installation of temporary facilities and fencing;

5. Submission of documents listed in the Article 9.2 relating to Contract Price breakdown;

6. Preliminary schedule analysis, due within 10 days after Notice to Proceed;

7. Contractor's Baseline Schedule (to be CPM based in conformance with Article 8);

8. Schedule of unit prices, if applicable;

9. Submittal Schedule;

10. Copies of necessary permits;

11. Copies of authorizations and licenses from governing authorities;

12. Initial progress report;

13. Surveyor qualifications;

14. Written acceptance of District's survey of rough grading, if applicable;

15. List of all Subcontractors, with names, license numbers, telephone numbers, and scope of work;

16. All bonds and insurance endorsements; and

17. Resumes of General Contractor's Project Manager, and if applicable, job site secretary, record documents recorder, and job site Superintendent.

9.4.1.3 *Second Payment Request.* The second payment request will not be processed until all Submittals and Shop Drawings have been accepted for review by the Architect.

9.4.1.4 *All Payment Requests.* No payment requests will be processed unless Contractor has submitted copies of the certified payroll records for the Work which correlates to the payment request and a proper CPM schedule pursuant to Article 8 is submitted.

9.4.1.5 *Final Payment Application (90% or 95%).* See Article 9.11.1

9.4.1.6 *Final Payment Application (100%).* See Article 9.11.3

9.5 STOP NOTICE CLAIMS AND WARRANTY OF TITLE

The Contractor warrants title to all Work. The Contractor further warrants that all Work is free and clear of liens, claims, security interests, stop notices, or encumbrances in favor of the Contractor, Subcontractors, material and equipment suppliers, or other persons or entities making a claim by reason of having provided labor, materials, and equipment relating to the Work. Failure to keep work free of liens, stop notices, claims, security interests or encumbrances is grounds to make a claim against Contractor's Payment and Performance Bond to immediately remedy and defend.

If a lien or stop notice of any nature should at any time be filed against the Work or any District property, by any entity which has supplied material or services at the request of the Contractor, Contractor and Contractor's Surety shall promptly, on demand by District and at Contractor's and Surety's own expense, take any and all action necessary to cause any such lien or stop notice to be released or discharged immediately therefrom.

If the Contractor fails to furnish to the District within ten (10) calendar days after written demand by the District, satisfactory evidence that a lien or stop notice has been so released, discharged, or secured, then District may discharge such indebtedness and deduct the amount required therefor, together with any and all losses, costs, damages, and attorney's fees and expense incurred or suffered by District from any

sum payable to Contractor under the Contract. In addition, any liens, stop notices, claims, security interests or encumbrances shall trigger the indemnification requirements under Article 3.15 and the Agreement Form, and shall act as a trigger under Civil Code section 2778 and 2779 requiring reimbursement for any and all costs following the District's written demand has been made. Any withholdings by the District for stop notices in accordance with Civil Code section 9358 shall not be a basis by the Contractor to make a Claim for interest penalties under Public Contract Code sections 7107 or 20104.50.

9.6 DECISIONS TO WITHHOLD PAYMENT

9.6.1 Reasons to Withhold Payment

The District may withhold payment in whole, or in part, to the extent reasonably necessary to protect the District if, in the District's opinion, the representations to the District required by Article 9.4 cannot be made. The District may withhold payment, in whole, or in part, to such extent as may be necessary to protect the District from loss because of, but not limited to:

a. Defective Work not remedied;

b. Stop notices served upon the District;

c. Liquidated Damages assessed against the Contractor;

d. The cost of Completion of the Contract if there exists reasonable doubt that the Work can be Completed for the unpaid balance of any Contract Price or by the completion date;

e. Damage to the District or other contractor;

f. Unsatisfactory prosecution of the Work by the Contractor;

g. Failure to store and properly secure materials;

h. Failure of the Contractor to submit on a timely basis, proper and sufficient documentation required by the Contract Documents, including, without limitation, acceptable monthly progress schedules, Shop Drawings, Submittal schedules, Schedule of Values, Product Data and samples, proposed product lists, executed Change Order, Construction Change Documents, and verified reports;

i. Failure of the Contractor to maintain As-Built Drawings;

j. Erroneous estimates by the Contractor of the value of the Work performed, or other false statements in an Payment Application;

k. Unauthorized deviations from the Contract Documents (including but not limited to Unresolved Notices of Deviations (DSA Form 154));

l. Failure of the Contractor to prosecute the Work in a timely manner in compliance with established progress schedules and completion dates.

m. Failure to properly pay prevailing wages as defined in Labor Code section 1720, et seq.;

n. Failure to properly maintain or clean up the Site;

o. Payments to indemnify, defend, or hold harmless the District;

p. Any payments due to the District including but not limited to payments for failed tests, or utilities changes or permits;

q. Failure to submit an acceptable Baseline Schedule or any Schedule or Schedule update in accordance with Article 8;

r. Failure to pay Subcontractor or suppliers as required by Article 9.8.1

s. Failure to secure warranties, including the cost to pay for warranties;

t. Failure to provide releases from material suppliers or Subcontractors when requested to do so;

u. Items deducted pursuant to Article 2.2;

v. Incomplete Punch List items under Article 9.9.1.1 which have gone through the Article 2.2 process; or

w. Allowances that have not been used.

9.6.2 Reallocation of Withheld Amounts

District may, in its discretion, apply any withheld amount to payment of outstanding claims or obligations as defined in Article 9.6.1 and 9.5. In so doing, District shall make such payments on behalf of Contractor. If any payment is so made by District, then such amount shall be considered as a payment made under Contract by District to Contractor and District shall not be liable to Contractor for such payments made in good faith. Such payments may be made without prior judicial determination of claim or obligation. District will render Contractor an accounting of such funds disbursed on behalf of Contractor.

If Contractor defaults or neglects to carry out the Work in accordance with the Contract Documents or fails to perform any provision thereof, District may, after ten (10) calendar days written notice to the Contractor and without prejudice to any other remedy make good such deficiencies. The District shall adjust the total Contract price by reducing the amount thereof by the cost of making good such deficiencies. If District deems it inexpedient to correct Work which is damaged, defective, or not done in accordance with Contract provisions, an equitable reduction in the Contract Price (of at least 150% of the estimated reasonable value of the nonconforming Work) shall be made therefor.

9.6.3 Payment After Cure

When the grounds for declining approval are removed, payment shall be made for amounts withheld because of them. No interest shall be paid on any retainage or amounts withheld due to the failure of the Contractor to perform in accordance with the terms and conditions of the Contract Documents.

9.7 NONCONFORMING WORK

Contractor shall promptly remove from premises all Work identified by District as failing to conform to the Contract whether incorporated or not. Contractor shall promptly replace and re-execute its own Work to comply with the Contract without additional expense to District and shall bear the expense of making good all Work of other contractors destroyed or damaged by such removal or replacement.

If Contractor does not remove such Work which has been identified by District as failing to conform to the Contract Documents within a reasonable time, fixed by written notice, District may remove it and may store the material at Contractor's expense. If Contractor does not pay expenses of such removal within ten (10) calendar days' time thereafter, District may, upon ten (10) calendar days' written notice, sell such materials at auction or at private sale and shall account for net proceeds thereof, after deducting all costs and expenses that should have been borne by Contractor.

9.8 SUBCONTRACTOR PAYMENTS

9.8.1 Payments to Subcontractors

No later than ten (10) days after receipt, or pursuant to Business and Professions Code section 7108.5, the Contractor shall pay to each Subcontractor, out of the amount paid to the Contractor on account of such Subcontractor's portion of the Work, the amount to which said Subcontractor is entitled. The Contractor shall, by appropriate agreement with each Subcontractor, require each Subcontractor to make payments to Sub-subcontractors in a similar manner.

9.8.2 No Obligation of District for Subcontractor Payment

The District shall have no obligation to pay, or to see to the payment of, money to a Subcontractor except as may otherwise be required by law.

9.8.3 Payment Not Constituting Approval or Acceptance

An approved Request for Payment, a progress payment, a Certificate of Substantial Completion, or partial or entire use or occupancy of the Project by the District shall not constitute acceptance of Work that is not in accordance with the Contract Documents.

9.8.4 Joint Checks

District shall have the right, if necessary for the protection of the District, to issue joint checks made payable to the Contractor and Subcontractors and material or equipment suppliers. The joint check payees shall be responsible for the allocation and disbursement of funds included as part of any such joint payment. In no event shall any joint check payment be construed to create any contract between the District and a Subcontractor of any tier, any obligation from the District to such Subcontractor, or rights in such Subcontractor against the District. The District may choose to issue joint checks at District's sole discretion and only after all the requirements of that particular school district and county are specifically met. Some school districts cannot issue joint checks, so the ability to issue joint checks depends on the school district and the specific circumstances.

9.9 COMPLETION OF THE WORK

9.9.1 Close-Out Procedures

9.9.1.1 *Incomplete Punch Items.* When the Contractor considers the Work Substantially Complete (See Article 1.1.46 for definition of Substantially Complete), the Contractor shall prepare and submit to the District a comprehensive list of minor items to be completed or corrected (hereinafter "Incomplete Punch Items" or "Punch List"). The Contractor and/or its Subcontractors shall proceed promptly to complete and correct the Incomplete Punch Items listed. Failure to include an item on such list does not alter the responsibility of the Contractor to complete all Work in accordance with the Contract Documents. Contractor is aware that Title 24 Section 4-343(a) provides:

> "RESPONSIBILITIES. IT IS THE DUTY OF THE CONTRACTOR TO COMPLETE THE WORK COVERED BY HIS OR HER CONTRACT IN ACCORDANCE WITH THE APPROVED PLANS AND SPECIFICATIONS THEREFOR. THE CONTRACTOR IN NO WAY IS RELIEVED OF ANY RESPONSIBILITY BY THE ACTIVITIES OF THE ARCHITECT, ENGINEER, INSPECTOR OR DSA IN THE PERFORMANCE OF SUCH DUTIES.

9.9.1.2 *Punch List Is Prepared Only After the Project Is Substantially Complete.* If any of the conditions noted in Article 1.1.46 as defining Substantial Completion are not met, the Inspector, Architect or District may reject Contractor's Incomplete Punch Items as premature. If the Architect and Inspector commence review of Incomplete Punch Items, all rights are reserved until the Project actually meets the definition of Substantially Complete. Liquidated Damages, warranties, and other contractual rights are not affected by Incomplete Punch Items unless otherwise addressed in these General Conditions.

Once the Inspector and the Architect determine the Project is Substantially Complete, a Certificate of Substantial Completion shall be issued. The Inspector and Architect shall prepare a Punch List of items which is an inspection report of the Work, if any, required in order to complete the Contract Documents and ensure compliance with the DSA Approved Plans so the Project may be Completed by the Contractor and a final DSA Close-Out is approved. When all Work for the Project is Complete, including Punch Lists and all Work complies with the approved Contract Documents and Change Orders, the Project has reached Final Completion.

9.9.1.3 *Time for Completion of Punch List.* Contractor shall only be given a period of no more than thirty (30) days to complete the Punch List for the Project. During the Punch List period, the Contractor's Superintendent and Project Manager shall remain engaged in the Project and shall not be removed or replaced. If the Punch List is not completed at the end of the Punch List time then Contractor shall issue a valued Punch List within 5 days after the date the Punch List time ends. If Contractor does not issue such a list, the District or Architect may issue a valued Punch List to the Contractor and withhold up to 150% of the value of the Punch List Work pursuant to Article 2.2 of this Agreement.

Failure to issue a timely written request for additional time to complete Punch List shall result in the deletion of the remaining Punch List Work pursuant to Article 2.2 and the issuance of a Deductive Change Order.

a. Extension of Time to Complete Punch List. If Contractor cannot finish the Punch List Work during the time period allotted under Article 9.9.1.3, the Contractor may make a written request for a Non-Compensable Punch List time extension accompanied by an estimate of the number of additional days it will take to complete the Punch List Work for a written consent from the District to allow continued Punch List Work. Punch List

time extensions are a maximum of thirty (30) days for each request and must be accompanied by an itemized valued Punch List.

b. If there is no valued Punch List accompanying any request or if Contractor intends to undertake Punch List without the continued support and supervision of its Superintendent and Project Manager (as required under Article 3.2), the District, Construction Manager or Architect may issue a valued Punch List, reject the Punch List Time Extension and deduct 150% of the valued Punch List pursuant to Article 2.2 and proceed to Close-Out the Project. Contractor shall cease work on the Project and proceed to complete Contractor's Retention Payment Application and complete the Work for the Project required pursuant to Article 9.11.3.

9.9.1.4 *District Rejection of Written Request for Punch List Time Extensions*. Following sixty (60) Days of Punch List under Article 9.9.1.3, the District has the option of rejecting Punch List Time Extension requests. The District may proceed under Article 2.2 and deduct the value of remaining Punch List Work pursuant to Article 2.2. If the District rejects the Punch List Time Extension request then Contractor shall cease Work on the Project and proceed to Final Inspection pursuant to Article 9.11.2.

9.9.1.5 *Punch List Liquidated Damages to Compensate for Added District Project Costs.* If the total time utilized for Punch List exceeds sixty (60) days [the thirty (30) day period under Article 9.9.1.3 plus an additional thirty (30) day period that has been requested in writing], and the District grants an additional written Punch List Time Extension that exceeds sixty (60) days of Punch List, then Contactor shall be charged Liquidated Damages of at least $750 per day for continued Punch List Work to partially compensate the Inspector, Architect, and Construction Manager's extended time on the Project. This Punch List Liquidated Damage number is based on anticipated cost for an Inspector on site and additional costs for the Architect and Construction Manager to reinspect Punch List items and perform the administration of the Close-out.

Contractor received thirty (30) days without any charges for Punch List Liquidated Damages and is placed on notice pursuant to this Article 9.9.1.5 that $750 is due for each day of Punch List that exceeds sixty (60) days at $750, a cost much lower than typical (and actual) costs for Inspection, Architect and Construction Manager time required during Punch List. Starting at ninety (90) days of Punch List (an excessive number of days to complete Punch List), the District shall be entitled to adjust Punch List Liquidated Damages to an estimate of the actual costs incurred to oversee, monitor and inspect the Punch List. If costs exceed $750 per day, the anticipated extended contract charges for Inspection, Architect, Construction Manager, and any other costs that will be incurred due to the extended Punch List shall be itemized and a daily rate of Punch List Liquidated Damages shall be presented in writing to the Contractor within five (5) days following the receipt of a written request for Punch List Time Extension by the Contractor that extends the Punch List time beyond ninety (90) days. This written notice of actual Punch List Liquidated Damages may be provided to the Contractor at any time following the first written request for Punch List Time extension requested under Article 9.9.1.3. The adjusted actual Punch List Liquidated Damage amount shall be applicable as Punch List Liquidated Damages commencing on the ninetieth (90th) day of Punch List.

9.9.2 <u>Close-Out Requirements for Final Completion of the Project</u>

a. Utility Connections. Buildings shall be connected to water, gas, sewer, and electric services, complete and ready for use. Service connections shall be made and existing services reconnected

b. As-Builts Up to Date and Complete. The intent of this procedure is to obtain an exact "As-Built" record of the Work upon completion of the project. The following information shall be carefully and correctly drawn on the prints and all items shall be accurately located and dimensioned from finished surfaces of building walls on all As-Built Drawings

1. The exact location and elevations of all covered utilities, including valves, cleanouts, etc. must be shown on As-Built Drawings

2. Contractor is liable and responsible for inaccuracies in As-Built Drawings, even though they become evident at some future date.

3. Upon completion of the Work and as a condition precedent to approval of Retention Payment, Contractor shall obtain the Inspector's approval of the "As-Built" information. When completed, Contractor shall deliver corrected sepias and/or a Diskette with an electronic file in a format acceptable to the District.

4. District may withhold the cost to hire a draftsman and potholing and testing service to complete Record As-Built Drawings at substantial cost if the Contractor does not deliver a complete set of Record As-Built Drawings. This shall result in withholding of between $10,000 to $20,000 per building that does not have a corresponding Record As Built Drawing.

c. Any Work not installed as originally indicated on Drawings

d. All DSA Close-Out requirements (See DSA Certification Guide) Contractor is also specifically directed to Item 3.2 in the DSA Certification Guide and the applicable certificates for the DSA-311 form.

e. Submission of Form 6-C. Contractor shall be required to execute a Form 6-C as required under Title 24 Sections 4-343. The Contractor understands that the filing with DSA of a Form 6-C is a requirement to obtain final DSA Approval of the construction by Contractor and utilized to verify under penalty of perjury that the Work performed by Contractor complies with the DSA approved Contract Documents. The failure to file a DSA Form 6C has two consequences. First, the Construction of the Project will not comply with the design immunity provisions of Government Code section 830.6 and exposes the District and the individual Board members to personal liability for injuries that occur on the Project.

Secondly , under DSA IR A-20, since the Project cannot be Certified by DSA, no future or further Projects will be authorized so Contractor will have essentially condemned the campus from any future modernization or addition of new classrooms through their failure to file the DSA Form 6C.

1. *Execution of the DSA Form 6-C is Mandatory*. Refusal to execute the Form 6-C, which is a Final DSA Verified Report that all Work performed complies with the DSA approved Contract Documents is a violation of Education Code section 17312 and shall be referred to the Attorney General for Prosecution.

2. *Referral to the District Attorney for Extortion*. If the Contractor's refusal to execute the DSA Form 6C is to leverage a Dispute, Claim or litigation, then the matter shall also be referred to the District Attorney for prosecution for extortion.

3. *Contractor shall be Responsible for All Costs to Certify the Project*. The District may certify the Project complies with Approved Plans and Specifications by utilizing the procedures under the Project Certification Guide (located at the DSA website). All costs for professionals, inspection, and testing required for an alternate Project Certification shall be the Contractor's responsibility and the District reserves its right to institute legal action against the Contractor and Contractor's Surety for all costs to certify the Project and all costs to correct Non-Compliant Work that is discovered during the Alternate Certification Process.

f. ADA Work that must be corrected to receive DSA certification. See Article 12.2.

g. Maintenance Manuals. At least thirty (30) days prior to final inspection, three (3) copies of complete operations and maintenance manuals, repair parts lists, service instructions for all electrical and mechanical equipment, and equipment warranties shall be submitted. All installation, operating, and maintenance information and Drawings shall be bound in 8½" x 11" binders. Provide a table of contents in front and all items shall be indexed with tabs. Each manual shall also contain a list of Subcontractors, with their addresses and the names of persons to contact in cases of emergency. Identifying labels shall provide names of manufactures, their addresses, ratings, and capacities of equipment and machinery.

1. Maintenance manuals shall also be delivered in electronic media for the Project. Any demonstration videos shall also be provided on electronic media.

h. Inspection Requirements. Before calling for final inspection, Contractor shall determine that the following Work has been performed:

1. The Work has been completed;

2. All fire/ life safety items are completed and in working order;

3. Mechanical and electrical Work complete, fixtures in place, connected and tested;

4. Electrical circuits scheduled in panels and disconnect switches labeled;

5. Painting and special finishes complete;

6. Doors complete with hardware, cleaned of protective film relieved of sticking or binding and in working order;

7. Tops and bottoms of doors sealed;

8. Floors waxed and polished as specified;

9. Broken glass replaced and glass cleaned;

10. Grounds cleared of Contractor's equipment, raked clean of debris, and trash removed from Site;

11. Work cleaned, free of stains, scratches, and other foreign matter, replacement of damaged and broken material;

12. Finished and decorative work shall have marks, dirt and superfluous labels removed;

13. Final cleanup, as in Article 3.12;

14. All Work pursuant to Article 9.11.2; and

15. Furnish a letter to District stating that the District's Representative or other designated person or persons have been instructed in working characteristics of mechanical and electrical equipment.

9.9.3 Costs of Multiple Inspections

More than two (2) requests of the District to make inspections required under Article 9.9.1 shall be considered an additional service of Architect, Inspector, Engineer or other consultants shall be the Contractor's responsibility pursuant to Article 4.5 and all subsequent costs will be prepared as a Deductive Change Order.

9.10 PARTIAL OCCUPANCY OR USE

9.10.1 District's Rights

The District may occupy or use any completed or partially completed portion of the Work at any stage. The District and the Contractor shall agree in writing to the responsibilities assigned to each of them for payments, security, maintenance, heat, utilities, damage to the Work, insurance, the period for correction of the Work, and the commencement of warranties required by the Contract Documents. If District and Contractor cannot agree as to responsibilities such disagreement shall be resolved pursuant to Article 4.6. When the Contractor considers a portion complete, the Contractor shall prepare and submit a Punch List to the District as provided under Article 9.9.1.

9.10.2 Inspection Prior to Occupancy or Use

Immediately prior to such partial occupancy or use, the District, the Contractor, and the Architect shall jointly inspect the area to be occupied or portion of the Work to be used in order to determine and record the condition of the Work.

9.10.3 No Waiver

Unless otherwise agreed upon, partial occupancy or use of a portion or portions of the Work shall not constitute acceptance of Work not complying with the requirements of the Contract Documents.

9.11 COMPLETION AND FINAL PAYMENT

9.11.1 Final Payment (90% Billing if Substantially Complex Finding and 95% Billing If No Finding Is Made)

The following items must be completed before the Final Payment Application will be accepted for processing at Substantial Completion of the Project:

a. Inspector sign-off of each item in the DSA 152 Project Inspection Card;

b. The Project has reached the Punch List items under Article 9.9.1.2 and the Project has been determined to be Substantially Complete under Article 1.1.46;

c. Removal of temporary facilities and services;

d. Testing, adjusting and balance records are complete;

e. Removal of surplus materials, rubbish, and similar elements;

f. Changeover of door locks;

g. Deductive items pursuant to Article 9.6 and Article 2.2; and

h. Completion and submission of all final Change Orders for the Project.

9.11.2 Final Inspection (Punch List Completion)

Contractor shall comply with Punch List procedures under Article 9.9.1.1, and maintain the presence of Project Superintendent and Project Manager (not replacement project superintendent or project manager) until the Punch List is complete to ensure proper and timely completion of the Punch List. Under no circumstances shall Contractor demobilize its forces prior to completion of the Punch List.

Upon completion of the Work under Article 9.9.1, the Contractor shall notify the District and Architect, who shall again inspect such Work. If the Architect and the District find the Work contained in the Punch List acceptable under the Contract Documents, the Work shall have reached Final Completion. Architect shall notify Contractor, who shall then submit to the Architect its Application for Retention Payment. This Application for Retention Payment shall contain any deductions under Article 9.6, including but not limited to incomplete Punch List items under Article 9.9.1.

Upon receipt and approval of Application for Retention Payment, the Architect shall issue a Form 6 stating that to the best of its knowledge, information, and belief, and on the basis of its

observations, inspections, and all other data accumulated or received by the Architect in connection with the Work, such Work has been completed in accordance with the Contract Documents. The District shall thereupon inspect such Work and either accept the Work as complete or notify the Architect and the Contractor in writing of reasons why the Work is not complete. Upon acceptance of the Work of the Contractor as fully complete (which, absent unusual circumstances, will occur when the Punch List items have been satisfactorily completed), the District shall record a Notice of Completion with the County Recorder, and the Contractor shall, upon receipt of payment from the District, pay the amounts due Subcontractors.

If the Architect and the District find that the Work contained in the Punch List is unacceptable, then Contractor shall issue a valued Punch List within 5 days after the date the Punch List time ends. If Contractor does not issue such a list, the District or Architect may issue a valued Punch List to the Contractor and withhold up to 150% of the value of the Punch List Work pursuant to Article 2.2 of this Agreement.

9.11.3 Retainage (100% Billing for the Entire Project)

The retainage, less any amounts disputed by the District or which the District has the right to withhold pursuant to the Contract Documents (including but not limited to incomplete Punch List items under Article 9.9.1), shall be paid after approval by the District of the Application for Retention Payment, after the satisfaction of the conditions set forth in Article 9, the Final Inspection under Article 9.11.2 is completed, and after thirty-five (35) days after the acceptance of the Work and recording of the Notice of Completion by District. No interest shall be paid on any retainage, or on any amounts withheld due to a failure of the Contractor to perform, in accordance with the terms and conditions of the Contract Documents, except as provided to the contrary in any escrow agreement between the District and the Contractor.

a. Procedures for Application for Retention Payment. The following conditions must be fulfilled prior to release of Retention Payment:

1. A full and final waiver or release of all stop notices in connection with the Work shall be submitted by Contractor, including a release of stop notice in recordable form, together with (to the extent permitted by law) a copy of the full and final release of all Stop Notice rights.

2. The Contractor shall have made all corrections, including all Punch List Items, to the Work which are required to remedy any defects therein, to obtain compliance with the Contract Documents or any requirements of applicable codes and ordinances, or to fulfill any of the orders or directions of District required under the Contract Documents.

3. Each Subcontractor shall have delivered to the Contractor all written guarantees, warranties, applications, releases from the Surety and warranty bonds (if applicable) required by the Contract Documents for its portion of the Work.

4. Contractor must have completed all requirements set forth in Article 9.9

5. Contractor must have issued a Form 6C for the Project.

6. The Contractor shall have delivered to the District all manuals and materials required by the Contract Documents.

7. The Contractor shall have completed final clean up as required by Article 3.12

8. Contractor shall have all deductive items under Article 9.6 and Article 2.2 submitted as part of the Retention Payment.

9.11.4 Recording of a Notice of Completion After Punch List Period and Final Inspection.

When the Work, or designated portion thereof, is complete or the District has completed the Article 9.6and/or the Article 2.2 process, whichever occurs first, the District will file either a Notice of Completion or a Notice of Completion noting valued Punch List items. Valued Punch List items will be deducted from the Retention Payment.

During the time when Work is being performed on the Punch List, the Project does not meet the definition of "Complete" under Public Contract Code section 7107(c)(1) even if there is "beneficial occupancy" of the Project since that has been no "cessation of labor" on the Project. Completion of Punch List under this Article is not "testing, startup, or commissioning by the public entity or its agent." In other words, the continuing Punch List Work is Contractor labor on the Project until each and every item of Punch List Work is complete or the time periods under Article 9.9.1 have expired.

9.11.5 Warranties

Warranties required by the Contract Documents shall commence on the date of Completion of the entire Work. Warranty periods DO NOT commence at Substantial Completion or when a particular Subcontractor work is complete. No additional charges, extras, Change Orders, or Claims may be sought for warranties commencing from the Notice of Completion.

District shall have the right to utilize equipment, test, and operate as necessary for acclimation, or testing without voiding or starting warranties. Taking beneficial occupancy shall not start warranties except in the case where the District agrees, in writing, that warranties shall commence running or where the District is taking phased occupancy of specific buildings or areas and completes separate Punch Lists as further addressed in Article 4.2.7.

9.11.6 Time for Submission of Application for Final Payment and Retention Payment (Unilateral Processing of Final and Retention Payment Application).

If Contractor submits a Final Payment Application which fails to include deductive items under Article 9.6, the District or Architect shall note this defective request for Final Payment Application. The Contractor shall be notified that specific deductive items shall be included in the Final Payment Application. If Contractor either continues to submit the Final Payment Application without deductive items under Article 9.6, or a period of 14 calendar days passes after Contractor is provided written notice of deductive items for inclusion in Final Payment Application, then District may either alter the Final

Payment Application and recalculate the math on the Final Payment Application to address the Article 9.6 deductive items or process a unilateral Final Payment Application.

9.11.7 Unilateral Release of Retention

After the recordation of the Notice of Completion, or within sixty (60) days following the completion of the Punch List or the expiration of the time for completion of Punch List under Article 9.9.1, if Contractor does not make an Application for Release of Retention, the District may unilaterally release retention less any deducts under Article 9.6 and/or Article 2.2, withholds due to stop notices, or withholdings due to other defective Work on the Project. District may also choose to unilaterally release Retention after deduction of 150% of any disputed items, which may also include items under Article 9.6 and 2.2. If a deduction pursuant to Article 9.6 is made from Retention, a letter deducting specific valued items shall be considered a notice of Default under the terms of the Escrow Agreement.

9.12 SUBSTITUTION OF SECURITIES

The District will permit the substitution of securities in accordance with the provisions of Public Contract Code section 22300 as set forth in the form contained in the Bid Documents.

ARTICLE 10
PROTECTION OF PERSONS AND PROPERTY

10.1 SAFETY PRECAUTIONS AND PROGRAMS

10.1.1 Contractor Responsibility

The Contractor shall be responsible for all damages to persons or property that occur as a result of its fault or negligence in connection with the prosecution of this Contract and shall take all necessary measures and be responsible for the proper care and protection of all materials delivered and Work performed until completion and final acceptance by the District. All Work shall be solely at the Contractor's risk, with the exception of damage to the Work caused by "acts of God" as defined in Public Contract Code section 7105(b)(2).

Contractor shall take, and require Subcontractor to take, all necessary precautions for safety of workers on the Work and shall comply with all applicable federal, state, local and other safety laws, standards, orders, rules, regulations, and building codes to prevent accidents or injury to persons on, about, or adjacent to premises where Work is being performed and to provide a safe and healthful place of employment. In addition to meeting all requirements of OSHA, Cal-OSHA, state, and local codes, Contractor shall furnish, erect and properly maintain at all times, as directed by District or Architect or required by conditions and progress of Work, all necessary safety devices, safeguards, construction canopies, signs, audible devices for protection of the blind, safety rails, belts and nets, barriers, lights, and watchmen for protection of workers and the public, and shall post danger signs warning against hazards created by such features in the course of construction. Contractor shall designate a responsible member of its organization on the Work, whose duty shall be to post information regarding protection and obligations of workers and other notices required under occupational safety and health laws, to comply with reporting and other occupational safety requirements, and to protect the life, safety and health of workers. The name and position of person so designated shall be reported to District by Contractor. Contractor shall correct any violations of safety laws, rules, orders, standards, or regulations. Upon the issuance of a citation or notice of violation by the Division of Occupational Safety and Health, such violation shall be corrected promptly.

10.1.2 Subcontractor Responsibility

Contractor shall require that Subcontractors participate in, and enforce, the safety and loss prevention programs established by the Contractor for the Project, which will cover all Work performed by the Contractor and its Subcontractors. Each Subcontractor shall designate a responsible member of its organization whose duties shall include loss and accident prevention, and who shall have the responsibility and full authority to enforce the program. This person shall attend meetings with the representatives of the various Subcontractors employed to ensure that all employees understand and comply with the programs.

10.1.3 Cooperation

All Subcontractors and material or equipment suppliers shall cooperate fully with Contractor, the District, and all insurance carriers and loss prevention engineers.

10.1.4 Accident Reports

Subcontractors shall immediately, within two (2) days, report in writing to the Contractor all accidents whatsoever arising out of, or in connection with, the performance of the Work, whether on or off the Site, which caused death, personal injury, or property damage, giving full details and statements of witnesses. In addition, if death or serious injuries or serious damages are caused, the accident shall be reported within four (4) days by telephone or messenger. Contractor shall thereafter immediately, within two (2) days, report the facts in writing to the District and the Architect giving full details of the accident.

10.1.5 First-Aid Supplies at Site

The Contractor will provide and maintain at the Site first-aid supplies which complies with the current Occupational Safety and Health Regulations.

10.1.6 Material Safety Data Sheets and Compliance with Proposition 65

Contractor is required to have material safety data sheets available in a readily accessible place at the job site for any material requiring a material safety data sheet per the Federal "hazard communication" standard, or employees' "right-to-know law." The Contractor is also required to properly label any substance brought into the job site, and require that any person working with the material, or within the general area of the material, is informed of the hazards of the substance and follows proper handling and protection procedures.

Contractor is required to comply with the provisions of California Health and Safety Code section 25249, et seq., which requires the posting and giving of notice to persons who may be exposed to any chemical known to the State of California to cause cancer. The Contractor agrees to familiarize itself with the provisions of this Section, and to comply fully with its requirements.

10.1.7 Non-Utilization of Asbestos Material

NO ASBESTOS OR ASBESTOS-CONTAINING PRODUCTS SHALL BE USED IN THIS CONSTRUCTION OR IN ANY TOOLS, DEVICES, CLOTHING, OR EQUIPMENT USED TO EFFECT THIS CONSTRUCTION.

Asbestos and/or asbestos-containing products shall be defined as all items containing, but not limited to, chrysotile, amosite, anthophyllite, tremolite, and antinolite.

Any or all material containing greater than one-tenth of one percent (>.1%) asbestos shall be defined as asbestos-containing material.

All Work or materials found to contain asbestos or Work or material installed with asbestos-containing equipment will be immediately rejected and this Work will be removed at no additional cost to the District.

Decontamination and removal of Work found to contain asbestos or Work installed with asbestos-containing equipment shall be done only under supervision of a qualified consultant, knowledgeable in the field of asbestos abatement and accredited by the Environmental Protection Agency.

The asbestos removal contractor shall be an EPA accredited contractor qualified in the removal of asbestos and shall be chosen and approved by the asbestos consultant, who shall have sole discretion and final determination in this matter.

The asbestos consultant shall be chosen and approved by the District, who shall have sole discretion and final determination in this matter.

The Work will not be accepted until asbestos contamination is reduced to levels deemed acceptable by the asbestos consultant.

Interface of Work under this Contract with Work containing asbestos shall be executed by the Contractor at his risk and at his discretion, with full knowledge of the currently accepted standards, hazards, risks, and liabilities associated with asbestos work and asbestos-containing products. By execution of this Contract, the Contractor acknowledges the above and agrees to hold harmless District and its assigns for all asbestos liability which may be associated with this work and agrees to instruct his employees with respect to the above-mentioned standards, hazards, risks, and liabilities.

10.2 SAFETY OF PERSONS AND PROPERTY

10.2.1 The Contractor

The Contractor shall take reasonable precautions for the safety of, and shall provide reasonable protection to prevent damage, injury, or loss to:

a. Employees on the Work and other persons who may be affected thereby;

b. The Work, material, and equipment to be incorporated therein, whether in storage on or off the Site, under the care, custody, or control of the Contractor or the Contractor's Subcontractors or Sub-subcontractors; and

c. Other property at the Site or adjacent thereto such as trees, shrubs, lawns, walks, pavement, roadways, structures, and utilities not designated for removal, relocation, or replacement in the course of construction.

Contractor is constructive owner of Project site as more fully discussed in Article 6.2.

10.2.2 Contractor Notices

The Contractor shall give notices and comply with applicable laws, ordinances, rules, regulations, and lawful orders of public authorities bearing on the safety of persons or property or their protection from damage, injury, or loss.

10.2.3 Safety Barriers and Safeguards

The Contractor shall erect and maintain, as required by existing conditions and performance of the Contract, reasonable safeguards for safety and protection, including posting danger signs and other warnings against hazards, promulgating safety regulations, and notifying owners and users of adjacent sites and utilities.

10.2.4 Use or Storage of Hazardous Material

When use or storage of explosives, other hazardous materials or equipment, or unusual methods are necessary for execution of the Work, the Contractor shall exercise utmost care and carry on such activities under supervision of properly qualified personnel. The Contractor shall notify the District

any time that explosives or hazardous materials are expected to be stored on Site. Location of storage shall be coordinated with the District and local fire authorities.

10.2.5 Protection of Work

The Contractor and Subcontractors shall continuously protect the Work, the District's property, and the property of others, from damage, injury, or loss arising in connection with operations under the Contract Documents. The Contractor and Subcontractors, at their own expense, shall make good any such damage, injury, or loss, except such as may be solely due to, or caused by, agents or employees of the District.

The Contractor, at Contractor's expense, will remove all mud, water, or other elements as may be required for the proper protection and prosecution of its Work.

Contractor shall take adequate precautions to protect existing roads, sidewalks, curbs, pavements, utilities, adjoining property and structures (including, without limitation, protection from settlement or loss of lateral support), and to avoid damage thereto, and repair any damage thereto caused by construction operations. All permits, licenses, or inspection fees required for such repair Work shall be obtained and paid for by Contractor.

10.2.6 Requirements for Existing Sites

Contractor shall (unless waived by the District in writing):

a. When performing construction on existing sites, become informed and take into specific account the maturity of the students on the Site; and perform Work which may interfere with school routine before or after school hours, enclose working area with a substantial barricade, and arrange Work to cause a minimum amount of inconvenience and danger to students and faculty in their regular school activities. The Contractor shall comply with Specifications and directives of the District regarding the timing of certain construction activities in order to avoid unnecessary interference with school functioning.

b. Avoid performing any Work that will disturb students during testing.

c. Provide substantial barricades around any shrubs or trees indicated to be preserved.

d. Deliver materials to building area over route designated by Architect.

e. Take preventive measures to eliminate objectionable dust, noise, or other disturbances.

f. Confine apparatus, the storage of materials, and the operations of workers to limits indicated by law, ordinances, permits or directions of Architect; and not interfere with the Work or unreasonably encumber premises or overload any structure with materials; and enforce all instructions of District and Architect regarding signs, advertising, fires, and smoking and require that all workers comply with all regulations while on the Project site.

g. Take care to prevent disturbing or covering any survey markers, monuments, or other devices marking property boundaries or corners. If such markers are

disturbed by accident, they shall be replaced by an approved land surveyor or civil engineer and all maps and records required therefrom shall be filed with county and local authorities, at no cost to the District. All filing and plan check fees shall be paid by Contractor.

h. Provide District on request with Contractor's written safety program and safety plan for each site.

10.2.7 Shoring and Structural Loading

The Contractor shall not impose structural loading upon any part of the Work under construction or upon existing construction on or adjacent to the Site in excess of safe limits, or loading such as to result in damage to the structural, architectural, mechanical, electrical, or other components of the Work. The design of all temporary construction equipment and appliances used in construction of the Work and not a permanent part thereof, including, without limitation, hoisting equipment, cribbing, shoring, and temporary bracing of structural steel, is the sole responsibility of the Contractor. All such items shall conform with the requirements of governing codes and all laws, ordinances, rules, regulations, and orders of all authorities having jurisdiction. The Contractor shall take special precautions, such as shoring of masonry walls and temporary tie bracing of structural steel Work, to prevent possible wind damage during construction of the Work. The installation of such bracing or shoring shall not damage the Work in place or the Work installed by others. Any damage which does occur shall be promptly repaired by the Contractor at no cost to the District.

10.2.8 Conformance within Established Limits

The Contractor and Subcontractors shall confine their construction equipment, the storage of materials, and the operations of workers to the limits indicated by laws, ordinances, permits, and the limits established by the District or the Contractor, and shall not unreasonably encumber the premises with construction equipment or materials.

10.2.9 Subcontractor Enforcement of Rules

Subcontractors shall enforce the District's and the Contractor's instructions, laws, and regulations regarding signs, advertisements, fires, smoking, the presence of liquor, and the presence of firearms by any person at the Site.

10.2.10 Site Access

The Contractor and the Subcontractors shall use only those ingress and egress routes designated by the District, observe the boundaries of the Site designated by the District, park only in those areas designated by the District, which areas may be on or off the Site, and comply with any parking control program established by the District, such as furnishing license plate information and placing identifying stickers on vehicles.

10.2.11 Security Services.

The Contractor shall be responsible for providing security services for the Site as needed for the protection of the Site and as determined in the District's sole discretion.

10.3 EMERGENCIES

10.3.1 Emergency Action

In an emergency affecting the safety of persons or property, the Contractor shall take any action necessary, at the Contractor's discretion, to prevent threatened damage, injury, or loss. Additional compensation or extension of time claimed by the Contractor on account of an emergency shall be determined as provided in Article 7.

10.3.2 Accident Reports

The Contractor shall promptly report in writing to the District all accidents arising out of or in connection with the Work, which caused death, personal injury, or property damage, giving full details and statements of any witnesses in conformance with Article 10.1.4. In addition, if death, serious personal injuries, or serious property damages are caused, the accident shall be reported in accordance with Article 10.1.4, immediately by telephone or messenger to the District.

10.4 HAZARDOUS MATERIALS

10.4.1 Discovery of Hazardous Materials

In the event the Contractor encounters or suspects the presence on the job site of material reasonably believed to be asbestos, polychlorinated biphenyl (PCB), or any other material defined as being hazardous by § 25249.5 of the California Health and Safety Code, which has not been rendered harmless, the Contractor shall immediately stop Work in the area affected and report the condition to the District and the Architect in writing, whether or not such material was generated by the Contractor or the District. The Work in the affected area shall not thereafter be resumed, except by written agreement of the District and the Contractor, if in fact the material is asbestos, polychlorinated biphenyl (PCB), or other hazardous material, and has not been rendered harmless. The Work in the affected area shall be resumed only in the absence of asbestos, polychlorinated biphenyl (PCB), or other hazardous material, or when it has been rendered harmless by written agreement of the District and the Contractor.

10.4.2 Hazardous Material Work Limitations

In the event that the presence of hazardous materials is suspected or discovered on the Site (except in cases where asbestos and other hazardous material Work in the Contractor's responsibility), the District shall retain an independent testing laboratory to determine the nature of the material encountered and whether corrective measures or remedial action is required. The Contractor shall not be required pursuant to Article 7 to perform without consent any Work in the affected area of the Site relating to asbestos, polychlorinated biphenyl (PCB), or other hazardous material, until any known or suspected hazardous material has been removed, or rendered harmless, or determined to be harmless by District, as certified by an independent testing laboratory and approved by the appropriate government agency.

10.4.3 Indemnification by Contractor for Hazardous Material Caused by Contractor

In the event the hazardous materials on the Project Site is caused by the Contractor, the Contractor shall pay for all costs of testing and remediation, if any, and shall compensate the District for any additional costs incurred as a result of Contractor's generation of hazardous material on the Project Site. In addition, the Contractor shall defend, indemnify and hold harmless District and its agents, officers,

and employees from and against any and all claims, damages, losses, costs and expenses incurred in connection with, arising out of, or relating to, the presence of hazardous material on the Project Site.

10.4.4 Terms of Hazardous Material Provision

The terms of this Hazardous Material provision shall survive the completion of the Work and/or any termination of this Contract.

10.5 SITE SAFETY PLAN

10.5.1 Requirements

A condition precedent of receiving the Notice to Proceed (NTP), the Contractor must submit to the District a Site Safety Plan (SSP) in compliance with DSA Bulletin BU 24-05. At a minimum, the SSP shall include the following information required in California Fire Code (CFC) Section 3303.1.1

- Name and contact information of site safety director.
- Documentation of training of the site safety director and fire watch personnel.
- Procedures for reporting emergencies.
- Fire department vehicle access routes.
- Locations of fire protection equipment, including portable fire extinguishers, standpipes, fire department connections and fire hydrants.
- Smoking and cooking policies, designated areas to be used where approved, and signage locations in accordance with CFC Section 3305.8.
- Location and safety considerations for temporary heating equipment.
- Hot work (welding, roofing, etc.) plan.
- Plans for control of combustible waste.
- Locations and methods for storage and use of flammable and combustible liquids and other hazardous materials.
- Provisions of site security.
- Changes that affect this plan.
- Other site-specific information requested by the local fire authority (LFA).

ARTICLE 11
INSURANCE AND BONDS

11.1 CONTRACTOR'S LIABILITY INSURANCE

Refer to EXHIBIT A: Owner Controlled Insurance Program (OCIP)

11.2 WORKERS' COMPENSATION INSURANCE

Refer to EXHIBIT A: Owner Controlled Insurance Program (OCIP)

11.3 BUILDER'S RISK/ "ALL RISK" INSURANCE

Refer to EXHIBIT A: Owner Controlled Insurance Program (OCIP)

11.4 FIRE INSURANCE

Refer to EXHIBIT A: Owner Controlled Insurance Program (OCIP)

11.5 AUTOMOBILE LIABILITY

Refer to EXHIBIT A: Owner Controlled Insurance Program (OCIP)

11.6 OTHER INSURANCE

Refer to EXHIBIT A: Owner Controlled Insurance Program (OCIP)

11.7 PROOF OF INSURANCE

Refer to EXHIBIT A: Owner Controlled Insurance Program (OCIP)

11.8 COMPLIANCE

Refer to EXHIBIT A: Owner Controlled Insurance Program (OCIP)

11.9 WAIVER OF SUBROGATION

Refer to EXHIBIT A: Owner Controlled Insurance Program (OCIP)

11.10 PERFORMANCE AND PAYMENT BONDS

11.10.1 Bond Requirements

Unless otherwise specified in the Supplemental Conditions, prior to commencing any portion of the Work, the Contractor shall furnish separate Payment and Performance Bonds for its portion of the Work which shall cover 100% faithful performance of and payment of all obligations arising under the Contract Documents and/or guaranteeing the payment in full of all claims for labor performed and materials supplied for the Work. All bonds shall be provided by a corporate Surety authorized and admitted to transact business in California as sureties.

To the extent, if any, that the Contract Price is increased in accordance with the Contract Documents, the Contractor shall, upon request of the District, cause the amount of the bonds to be increased accordingly and shall promptly deliver satisfactory evidence of such increase to the District. To the extent available, the bonds shall further provide that no change or alteration of the Contract Documents (including, without limitation, an increase in the Contract Price, as referred to above), extensions of time, or modifications of the time, terms, or conditions of payment to the Contractor will release the Surety. If the Contractor fails to furnish the required bonds, the District may terminate the Contract for cause.

11.10.2 Surety Qualification

Only bonds executed by admitted Surety insurers as defined in Code of Civil Procedure § 995.120 shall be accepted. Surety must be a California-admitted Surety and listed by the U.S. Treasury with a bonding capacity in excess of the Project cost.

11.10.3 Alternate Surety Qualifications

If a California-admitted Surety insurer issuing bonds does not meet these requirements, the insurer will be considered qualified if it is in conformance with § 995.660 of the California Code of Civil Procedure and proof of such is provided to the District.

ARTICLE 12
UNCOVERING AND CORRECTION OF WORK

12.1 COMPLIANCE WITH TITLE 24 INSTALLATION REQUIREMENTS

Contractor is aware of the requirements governing Contractor's Work under title 24 Section 4-343 which provides, in pertinent part:

4-343. Duties of the Contractor.

(a) **Responsibilities**. It is the duty of the contractor to complete the Work covered by his or her contract in accordance with the approved Plans and Specifications therefore. The contractor in no way is relieved of any responsibility by the activities of the architect, engineer, Inspector or DSA in the performance of such duties.

(b) **Performance of the Work.** The contractor shall carefully study the approved Plans and Specifications and shall plan a schedule of operations well ahead of time. If at any time it is discovered that Work is being done which is not in accordance with the approved Plans and Specifications, the contractor shall correct the Work immediately. All inconsistencies or items which appear to be in error in the Plans and Specifications shall be promptly called to the attention of the architect or registered engineer, through the Inspector, for interpretation or correction. In no case, however, shall the instruction of the architect or registered engineer be construed to cause Work to be done which is not in conformity with the approved Plans, Specifications, and Change Orders. The contractor must notify the Project Inspector, in advance, of the commencement of construction of each and every aspect of the Work.

12.1.1 Issuance of Notices of Non-Compliance

The Inspector may issue a Notice of Non-Compliance on the Project indicating deviation from Plans and Specifications. It is Contractor's responsibility to correct all deviations from the approved Plans and Specifications unless the District has issued an Immediate Change Directive. In such case, the Contractor shall proceed with the Work with the understandings of the District as set forth in the ICD and as specifically noted in Article 7.3.

12.2 SPECIAL NOTICE OF AMERICAN'S WITH DISABILITIES ACT

Some of the requirements in the Plans and Specifications are meant to comply with the Americans with Disabilities Act ("ADA"). The requirements of the ADA are technical in nature and may appear to be minor in nature (i.e. whether a walkway or ramp has a 2% cross-slope). Contractor is warned that even the slightest deviation from the specific requirements from the ADA is considered a Civil Rights violation and subjects the District to fines of three times actual damages sustained by a handicap individual or up to $4,000 per violation and attorney's fees required to enforce the ADA violation. As a result of the significant liability and exposure associated with ADA aspects of the Contract, Contractor shall take special care to meet all ADA requirements detailed in the Plans and Specifications. Failure to comply with ADA rules that results in a Notice of Non-Compliance shall be repaired to meet ADA requirements promptly. In addition, any ADA violations that are not identified by Inspector or Architect that are later identified shall be repaired and charged back to the Contractor through a Deductive Change Order.

12.2.1 Indemnification of ADA Claims

Contractor shall indemnify, hold harmless and defend the District from ADA claims arising from the failure to comply with the Plans and Specifications. Further, any withholdings for ADA violations under Article 9.6 shall include potential redesign costs and an accelerated repair costs due to the potential for ADA claims arising from DSA posting of ADA violations on the Project.

12.3 UNCOVERING OF WORK

12.3.1 Uncovering Work for Required Inspections

Work shall not be covered without the Inspector's review and the Architect's knowledge that the Work conforms with the requirements of the approved Plans and Specifications (except in the case of an ICD under Article 7.3). Inspector must be timely notified of inspections and of new areas so Work can be inspected at least 48 hours before opening a new area (For example, see DSA Form 156 for Commencement/Completion of Work Notification which requires "at least 48 hour" advance notification of a new area). An Inspector must comply with DSA protocols for signing each category or phase of Work under DSA Form 152 (in compliance with the Form 152 Manual) or a Notice of Deviation (DSA Form 154) will be issued requiring the Work that was not inspected be uncovered for inspection. Thus, if a portion of the Work is covered without inspection or Architect approval, is subject to a Notice of Non-Compliance for being undertaken without inspection, or otherwise not in compliance with the Contract Documents, after issuance of a Written Notice of Non-Compliance (Form 154) or a written notice to uncover Work, Contractor shall promptly uncover all Work (which includes furnishing all necessary facilities, labor, and material) for the Inspector's or the Architect's observation and such Work shall be replaced at the Contractor's expense without change in the Contract Sum or Time.

12.3.2 Costs for Inspections Not Required

If a portion of the Work has been covered is believed to be Non-Conforming to the Plans and Specifications, even if the Form 152 for the category of Work has been signed by the Inspector, the Inspector or the Architect may request to see such Work, and it shall be promptly uncovered by the Contractor. If such Work is in accordance with the Contract Documents, costs of uncover and replacement shall, by appropriate Change Order and shall, be charged to the District. If such Work is not in accordance with Contract Documents, the Contractor shall be responsible for all costs to uncover the Work, delays incurred to uncover the Work, and Contractor shall pay all costs to correct the Non-Conforming construction condition unless the condition was caused by the District or a separate contractor, in which event the District shall be responsible for payment of such costs to the Contractor.

12.4 CORRECTION OF WORK

12.4.1 Correction of Rejected Work

The Contractor shall promptly correct the Work rejected by the Inspector or the District upon recommendation of the Architect as failing to conform to the requirements of the Contract Documents, whether observed before or after Completion and whether or not Fabricated, installed, or completed. The Contractor shall bear costs of correcting the rejected Work, including cost for delays that may be incurred by Contractor or Subcontractors, the cost for additional testing, inspections, and compensation for the Inspector's or the Architect's services and expenses made necessary thereby (including costs for preparing a CCD, DSA CCD review fees, and additional inspection and special inspection costs).

12.4.2 One-Year Warranty Corrections

If, within one (1) year after the date of Completion of the Work or a designated portion thereof, or after the date for commencement of warranties established under Article 9.9.1, or by the terms of an applicable special warranty required by the Contract Documents, any of the Work is found to be not in accordance with the requirements of the Contract Documents, the Contractor shall correct it promptly after receipt of written notice from the District to do so unless the District has previously given the Contractor a written acceptance of such condition. This period of one (1) year shall be extended with respect to portions of the Work first performed after Completion by the period of time between Completion and the actual performance of the Work. This obligation under this Article 12.4.2 shall survive acceptance of the Work under the Contract and termination of the Contract. The District shall give such notice promptly after discovery of the condition.

12.4.3 District's Rights if Contractor Fails to Correct

If the Contractor fails to correct nonconforming Work within a reasonable time, the District may correct the Work and seek a Deductive Change Order, pursuant to Article 9.6 or Article 2.2.

ARTICLE 13
MISCELLANEOUS PROVISIONS

13.1 GOVERNING LAW

The Contract shall be governed by the law of the place where the Project is located.

13.2 SUCCESSORS AND ASSIGNS

The District and the Contractor respectively bind themselves, their partners, successors, assigns, and legal representatives to the other party hereto and to partners, successors, assigns, and legal representatives of such other party in respect to covenants, agreements, and obligations contained in the Contract Documents. Neither party to the Contract shall assign the Contract as a whole without written consent of the other. If either party attempts to make such an assignment without such consent, that party shall nevertheless remain legally responsible for all obligations under the Contract.

13.3 WRITTEN NOTICE

In the absence of specific notice requirements in the Contract Documents, written notice shall be deemed to have been duly served if delivered in person to the individual, member of the firm or entity, or to an officer of the corporation for which it was intended, or if delivered at or sent by registered or certified mail to the last business address known to the party giving notice.

13.4 RIGHTS AND REMEDIES

13.4.1 Duties and Obligations Cumulative

Duties and obligations imposed by the Contract Documents and rights and remedies available thereunder shall be in addition to and not a limitation of duties, obligations, rights, and remedies otherwise imposed or available by law.

13.4.2 No Waiver

No action or failure to act by the Inspector, the District, or the Architect shall constitute a waiver of a right or duty afforded them under the Contract Documents, nor shall such action or failure to act constitute approval of or acquiescence in a breach thereunder, except as may be specifically agreed in writing.

13.5 TESTS AND INSPECTIONS

13.5.1 Compliance

Tests, inspections, and approvals of portions of the Work required by the Contract Documents will comply with Division 1, Title 24, and with all other laws, ordinances, rules, regulations, or orders of public authorities having jurisdiction.

13.5.2 Independent Testing Laboratory

The District will select and pay an independent testing laboratory to conduct all tests and inspections. Selection of the materials required to be tested shall be made by the laboratory or the District's representative and not by the Contractor. See Articles 3.13.1 and 4.3.6 regarding costs or expenses of inspection or testing outside of the Project Site.

13.5.3 Advance Notice to Inspector

The Contractor shall notify the Inspector a sufficient time in advance of its readiness for required observation or inspection so that the Inspector may arrange for same. The Contractor shall notify the Inspector a sufficient time in advance of the manufacture of material to be supplied under the Contract Documents which must, by terms of the Contract Documents, be tested in order that the Inspector may arrange for the testing of the material at the source of supply.

13.5.4 Testing Off-Site

Any material shipped by the Contractor from the source of supply, prior to having satisfactorily passed such testing and inspection or prior to the receipt of notice from said Inspector that such testing and inspection will not be required, shall not be incorporated in the Work.

13.5.5 Additional Testing or Inspection

If the Inspector, the Architect, the District, or public authority having jurisdiction determines that portions of the Work require additional testing, inspection, or approval not included under Article 13.5.1, the Inspector will, upon written authorization from the District, make arrangements for such additional testing, inspection, or approval. The District shall bear such costs except as provided in Articles 13.5.6 and 13.5.7.

13.5.6 Costs for Retesting

If such procedures for testing, inspection, or approval under Articles 13.5.1 and 13.5.2reveal failure of the portions of the Work to comply with requirements established by the Contract Documents, the Contractor shall bear all costs arising from such failure, including those of re-testing, re-inspection, or re-approval, including, but not limited to, compensation for the Architect's services and expenses. Any such costs shall be paid by the District, invoiced to the Contractor, and deducted from the next Progress Payment.

13.5.7 Costs for Premature Test

In the event the Contractor requests any test or inspection for the Project and is not completely ready for the inspection, the Contractor shall be invoiced by the District for all costs and expenses resulting from that testing or inspection, including, but not limited to, the Inspector's and Architect's fees and expenses, and the amount of the invoice shall be deducted from the next Progress Payment.

13.6 TRENCH EXCAVATION

13.6.1 Trenches Greater Than Five Feet

Pursuant to Labor Code section 6705, if the Contract Price exceeds $25,000 and involves the excavation of any trench or trenches five (5) feet or more in depth, the Contractor shall, in advance of

excavation, submit to the District or a registered civil or structural engineer employed by the District or Architect, a detailed plan showing the design of shoring for protection from the hazard of caving ground during the excavation of such trench or trenches.

13.6.2 Excavation Safety

If such plan varies from the Shoring System Standards established by the Construction Safety Orders, the plan shall be prepared by a registered civil or structural engineer, but in no case shall such plan be less effective than that required by the Construction Safety Orders. No excavation of such trench or trenches shall be commenced until said plan has been accepted by the District or by the person to whom authority to accept has been delegated by the District.

13.6.3 No Tort Liability of District

Pursuant to Labor Code § 6705, nothing in this Article shall impose tort liability upon the District or any of its employees.

13.6.4 No Excavation without Permits

The Contractor shall not commence any excavation Work until it has secured all necessary permits including the required CAL OSHA excavation/shoring permit. Any permits shall be prominently displayed on the Site prior to the commencement of any excavation.

13.7 WAGE RATES, TRAVEL, AND SUBSISTENCE

13.7.1 Wage Rates

Pursuant to the provisions of Article 2 (commencing at § 1720), Chapter 1, Part 7, Division 2, of the Labor Code, the District has obtained the general prevailing rate of per diem wages and the general prevailing rate for holiday and overtime work in the locality in which this public works project is to be performed for each craft, classification, or type of worker needed for this Project from the Director of the Department of Industrial Relations ("Director"). These rates are on file at the administrative office of the District and are also available from the Director of the Department of Industrial Relations. Copies will be made available to any interested party on request. The Contractor shall post a copy of such wage rates at appropriate, conspicuous, weatherproof points at the Site.

Any worker employed to perform Work on the Project, but such Work is not covered by any classification listed in the published general prevailing wage rate determinations or per diem wages determined by the Director of the Department of Industrial Relations, shall be paid not less than the minimum rate of wages specified therein for the classification which most nearly corresponds to the employment of such person in such classification.

13.7.2 Holiday and Overtime Pay

Holiday and overtime work, when permitted by law, shall be paid for at the rate set forth in the prevailing wage rate determinations issued by the Director of the Department of Industrial Relations or at least one and one-half (1½) times the specified basic rate of per diem wages, plus employer payments, unless otherwise specified in the Contract Documents or authorized by law.

13.7.3 Wage Rates Not Affected by Subcontracts

The Contractor shall pay and shall cause to be paid each worker engaged in the execution of the Work on the Project not less than the general prevailing rate of per diem wages determined by the Director, regardless of any contractual relationship which may be alleged to exist between the Contractor or any Subcontractor and such workers.

13.7.4 Per Diem Wages

The Contractor shall pay and shall cause to be paid to each worker needed to execute the Work on the Project per diem wages including, but not limited to, employer payments for health and welfare, pensions, vacation, travel time and subsistence pay as provided for in Labor Code §1773.1.

13.7.5 Forfeiture and Payments

Pursuant to Labor Code §1775, the Contractor shall forfeit to the District, not more than Two Hundred Dollars ($200.00) for each calendar day, or portion thereof, for each worker paid less than the prevailing wages rates as determined by the Director of the Department of Industrial Relations, for the work or craft in which the worker is employed for any Work done under the Agreement by the Contractor or by any Subcontractor under it. The amount of the penalty shall be determined by the Labor Commissioner and shall be based on consideration of: (1) whether the Contractor or Subcontractor's failure to pay the correct rate of per diem wages was a good faith mistake and, if so, the error was promptly and voluntarily corrected upon being brought to the attention of the Contractor or Subcontractor; and (2) whether the Contractor or Subcontractor has a prior record of failing to meet its prevailing wage obligations.

13.7.6 Monitoring and Enforcement by Labor Commissioner

Monitoring and enforcement of the prevailing wage laws and related requirements will be performed by the Labor Commissioner/ Department of Labor Standards Enforcement (DLSE). The Contractor and all subcontractors shall be required to furnish, at least "monthly" as defined by Labor Code section 1771.4(a)(3)(A)(i), certified payroll records directly to the Labor Commissioner in accordance with Labor Code section 1771.4. All payroll records shall be furnished in an electronic format and in the manner required by the Labor Commissioner. The Contractor and all subcontractors must sign up for, and utilize, the Labor Commissioner's electronic certified payroll records submission system. The District will have direct and immediate access to all CPRs for the Project that are submitted through the Labor Commissioner's system. The District can use this information for any appropriate purpose, including monitoring compliance, identifying suspected violations, and responding to Public Records Act requests.

The Labor Commissioner/ DLSE may conduct various compliance monitoring and enforcement activities including, but not limited to, confirming the accuracy of payroll records, conducting worker interviews, conducting audits, requiring submission of itemized statements prepared in accordance with Labor Code section 226, and conducting random in-person inspections of the Project site ("On-Site Visits"). On-Site Visits may include inspections of records, inspections of the Work site and observation of work activities, interviews of workers and others involved with the Project, and any other activities deemed necessary by the Labor Commissioner/DLSE to ensure compliance with prevailing wage requirements. The Labor Commissioner/DLSE shall have free access to any construction site or other place of labor and may obtain any information or statistics pertaining to the lawful duties of the Labor Commissioner/DLSE.

Any lawful activities conducted or any requests made by the Labor Commissioner/DLSE shall not be the basis for any delays, claims, costs, damages or liability of any kind against the District by

the Contractor. Contractor and all subcontractors shall cooperate and comply with any lawful requests by the Labor Commissioner/ DLSE. The failure of the Labor Commissioner, DLSE, or any other entity related to the Department of Industrial Relations to comply with any requirement imposed by the California Code of Regulations, Title 8, Chapter 8 shall not of itself constitute a defense to the failure to pay prevailing wages or to comply with any other obligation imposed by Division 2, Part 7, Chapter 1 of the Labor Code.

Prior to commencing any Work on the Project, the Contractor shall post the required notice/poster required under the California Code of Regulations and Labor Code section 1771.4 in both English and Spanish at a conspicuous, weatherproof area at the Project site. The required notice/poster is available on the Labor Commissioner's website.

13.8 RECORDS OF WAGES PAID

13.8.1 Payroll Records

a. Pursuant to §1776 of the Labor Code, the Contractor and each Subcontractor shall keep an accurate payroll record showing the name, address, social security number, work classification and straight time and overtime hours worked each day and week, and the actual per diem wages paid to each journeyman, apprentice, worker or other employee employed by him or her in connection with the Project.

b. All payroll records, as specified in Labor Code §1776, of the Contractor and all Subcontractors shall be certified and furnished directly to the Labor Commissioner in accordance with Labor Code §1771.4(a)(3) once every thirty (30) days while Work is being performed on the Project and within thirty (30) days after the final day of Work performed on the Project (or more frequently if required by the District or the Labor Commissioner). The Contractor and all Subcontractors shall submit their own payroll records to the Labor Commissioner on the internet website of the Department of Industrial Relations and such payroll records shall be in an electronic format prescribed by the Labor Commissioner. Pursuant to Labor Code §1771.4(a)(3)(B), the Contractor and any Subcontractor who fails to furnish payroll records in accordance with Labor Code §1771.4(a)(3), relating to their own employees, shall be subject to a penalty by the Labor Commissioner. The amount of the penalty shall be One Hundred Dollars ($100.00) for each calendar day in which such party is in violation of Labor Code §1771.4(a)(3), not to exceed a total penalty of Five Thousand Dollars ($5,000.00) per project. Payroll records as specified in Labor Code §1776 shall also be certified and submitted to the District with each application for payment.

All payroll records shall be available for inspection at all reasonable hours at the principal office of the Contractor on the following basis:

1. A certified copy of an employee's payroll record shall be made available for inspection or furnished to the employee or his or her authorized representative on request.

2. A certified copy of all payroll records shall be made available for inspection or furnished upon request to a representative of District, the

Division of Labor Standards Enforcement or the Division of Apprenticeship Standards of the Department of Industrial Relations.

3. A certified copy of all payroll records shall be made available upon request by the public for inspection or for copies thereof. However, a request by the public shall be made through the District, the Division of Apprenticeship Standards or the Division of Labor Standards Enforcement. If the requested payroll records have not been provided pursuant to Paragraph (2) above, the requesting party shall, prior to being provided the records, reimburse the costs, according to law for the preparation by the Contractor, Subcontractor(s), and the entity through which the request was made. The public shall not be given access to such records at the principal office of the Contractor.

c. The certified payroll records shall be on forms provided by the Division of Labor Standards Enforcement or shall contain the same information as the forms provided by the Division of Labor Standards Enforcement.

d. The Contractor or Subcontractor(s) shall file a certified copy of all payroll records with the entity that requested such records within 10 calendar days after receipt of a written request.

e. Any copy of records made available for inspection as copies and furnished upon request to the public or any public agency by the District, the Division of Apprenticeship Standards or the Division of Labor Standards Enforcement shall be marked or obliterated to prevent disclosure of an individual's name, address and social security number. The name and address of the Contractor awarded the Contract or the Subcontractor(s) performing the Contract shall not be marked or obliterated. Any copy of records made available for inspection by, or furnished to, a joint labor-management committee established pursuant to the federal Labor Management Cooperation Act of 1978 (Section 175a of Title 29 of the United States Code) shall be marked or obliterated only to prevent disclosure of an individual's name and social security number. Notwithstanding any other provision of law, agencies that are included in the Joint Enforcement Strike Force on the Underground Economy established pursuant to Section 329 of the Unemployment Insurance Code and other law enforcement agencies investigating violations of law shall, upon request, be provided non-redacted copies of certified payroll records.

f. The Contractor shall inform the District of the location of all payroll records, including the street address, city and county, and shall, within five working days, provide a notice of a change of location and address.

g. The Contractor or Subcontractor(s) shall have 10 calendar days in which to comply subsequent to receipt of a written notice requesting payroll records. In the event that the Contractor or Subcontractor(s) fails to comply within the 10-day period, the Contractor or Subcontractor(s) shall, as a penalty to the District, forfeit One Hundred Dollars ($100.00) for each calendar day, or portion thereof, for each worker, until strict compliance is effectuated. Upon the request of the Division of

Apprenticeship Standards or the Division of Labor Standards Enforcement, these penalties shall be withheld from progress payments then due.

Responsibility for compliance with this Article shall rest upon the Contractor.

13.8.2 Withholding of Contract Payments & Penalties

The District may withhold or delay contract payments to the Contractor and/or any Subcontractor if:

a. The required prevailing rate of per diem wages determined by the Director of the Department of Industrial Relations is not paid to all workers employed on the Project; or

b. The Contractor or Subcontractor(s) fail to submit all required certified payroll records to the Labor Commissioner in accordance with Labor Code §1771.4(a)(3); or

c. The Contractor or Subcontractor(s) fail to submit all required certified payroll records with each application for payment, but not less than once per month; or

d. The Contractor or Subcontractor(s) submit incomplete or inadequate payroll records; or

e. The Contractor or Subcontractor(s) fail to comply with the Labor Code requirements concerning apprentices; or

f. The Contractor or Subcontractor(s) fail to comply with any applicable state laws governing workers on public works projects.

13.9 APPRENTICES

13.9.1 Apprentice Wages and Definitions

All apprentices employed by the Contractor to perform services under the Contract shall be paid the standard wage paid to apprentices under the regulations of the craft or trade for which he or she is employed, and as determined by the Director of the Department of Industrial Relations, and shall be employed only at the craft or trade to which he or she is registered. Only apprentices, as defined in §3077 of the Labor Code, who are in training under apprenticeship standards that have been approved by the Chief of the Division of Apprenticeship Standards and who are parties to written apprenticeship agreements under Chapter 4 (commencing with §3070) of Division 3, are eligible to be employed under this Contract. The employment and training of each apprentice shall be in accordance with the apprenticeship standards and apprentice agreements under which he or she is training, or in accordance with the rules and regulations of the California Apprenticeship Council.

13.9.2 Employment of Apprentices

Contractor agrees to comply with the requirements of Labor Code §1777.5. The Contractor awarded the Project, or any Subcontractor under him or her, when performing any of the Work under the Contract or subcontract, employs workers in any apprenticeable craft or trade, the Contractor and

Subcontractor shall employ apprentices in the ratio set forth in Labor Code §1777.5. The Contractor or any Subcontractor must apply to any apprenticeship program in the craft or trade that can provide apprentices to the Project site for a certificate approving the contractor or subcontractor under the apprenticeship standards for the employment and training of apprentices in the area or industry affected. However, the decision of the apprenticeship program to approve or deny a certificate shall be subject to review by the Administrator of Apprenticeship. The apprenticeship program or programs, upon approving the Contractor or Subcontractor, shall arrange for the dispatch of apprentices to the Contractor or Subcontractor upon the Contractor's or Subcontractor's request. "Apprenticeable craft or trade" as used in this Article means a craft or trade determined as an apprenticeable occupation in accordance with the rules and regulations prescribed by the California Apprenticeship Council. The ratio of work performed by apprentices to journeyman employed in a particular craft or trade on the Project shall be in accordance with Labor Code §1777.5.

13.9.3 Submission of Contract Information

Prior to commencing Work on the Project, the Contractor and Subcontractors shall submit contract award information to the applicable apprenticeship program(s) that can supply apprentices to the Project and make the request for the dispatch of apprentices in accordance with the Labor Code. The information submitted shall include an estimate of journeyman hours to be performed under the Contact, the number of apprentices proposed to be employed, and the approximate dates the apprentices would be employed. A copy of this information shall also be submitted to the District if requested. Within 60 days after concluding Work on the Project, the Contractor and Subcontractors shall submit to the District, if requested, and to the apprenticeship program a verified statement of the journeyman and apprentice hours performed on the Project.

13.9.4 Apprentice Fund

The Contractor or any Subcontractor under him or her, who, in performing any of the Work under the Contract, employs journeymen or apprentices in any apprenticeable craft or trade shall contribute to the California Apprenticeship Council the same amount that the Director determines is the prevailing amount of apprenticeship training contributions in the area of the Project. The Contractor and Subcontractors may take as a credit for payments to the California Apprenticeship Council any amounts paid by the Contractor or Subcontractor to an approved apprenticeship program that can supply apprentices to the Project. The Contractor and Subcontractors may add the amount of the contributions in computing his or her bid for the Contract.

13.9.5 Prime Contractor Compliance

The responsibility of compliance with Article 13 and §1777.5 of the Labor Code for all apprenticeable occupations is with the Prime Contractor. Any Contractor or Subcontractor that knowingly violates the provisions of this Article or Labor Code §1777.5 shall be subject to the penalties set forth in Labor Code §1777.7.

13.10 ASSIGNMENT OF ANTITRUST CLAIMS

13.10.1 Application

Pursuant to Government Code § 4551, in entering into a public works contract or a subcontract to supply goods, services, or materials pursuant to a public works contract, the Contractor or

Subcontractor offers and agrees to assign to the District all rights, title, and interest in and to all causes of action it may have under Section 4 of the Clayton Act, (15 U.S.C. § 15) or under the Cartwright Act (Chapter 2 [commencing with § 16700] of Part 2 of Division 7 of the Business and Professions Code), arising from the purchase of goods, services, or materials pursuant to the public works contract or the subcontract. This assignment shall be made and become effective at the time the awarding body tenders Retention Payment to the Contractor, without further acknowledgment by the parties. If the District receives, either through judgment or settlement, a monetary recovery for a cause of action assigned under Chapter 11 (commencing with § 4550) of Division 5 of Title 1 of the Government Code, the assignor shall be entitled to receive reimbursement for actual legal costs incurred and may, upon demand, recover from the District any portion of the recovery, including treble damages, attributable to overcharges that were paid by the assignor but were not paid by the District as part of the bid price, less the expenses incurred in obtaining that portion of the recovery.

13.10.2 Assignment of Claim

Upon demand in writing by the assignor, the District shall, within one (1) year from such demand, reassign the cause of action assigned pursuant to this Article if the assignor has been or may have been injured by the violation of law for which the cause of action arose and the District has not been injured thereby or the District declines to file a court action for the cause of action.

13.11 STATE AND DISTRICT CONDUCTED AUDITS

Pursuant to and in accordance with the provisions of Government Code § 10532, or any amendments thereto, all books, records, and files of the District, the Contractor, or any Subcontractor connected with the performance of this Contract involving the expenditure of state funds in excess of Ten Thousand Dollars ($10,000.00), including, but not limited to, the administration thereof, shall be subject to the examination and audit of the Office of the Auditor General of the State of California for a period of five (5) years after Retention Payment is made or a Notice of Completion is Recorded, whichever occurs first. Contractor shall preserve and cause to be preserved such books, records, hard drives, electronic media, and files for the audit period.

Pursuant to the remedies under Public Contract Code section 9201 and Government Code section 930.2, Contractor, through execution of this Agreement, also agrees the District shall have the right to review and audit, upon reasonable notice, the books and records of the Contractor concerning any monies associated with the Project. The purpose of this "Audit" is to quickly and efficiently resolve Disputes or Claims based on the actual costs incurred and to reduce the uncertainty in resolving Disputes or Claims with limited information. The District shall perform any audits at its own cost and any such audit shall be performed by an independent auditor, having no direct or indirect relationship with the functions or activities being audited or with the business conducted by the Contractor or District. In the event the independent auditor determines that Change Orders, response to Request for Proposals, Disputes, Claims, or other requests for payment are in error, or have has any other concerns or questions, the Auditor shall report the results of the Audit findings to the District and provide a copy to the Contractor after giving the District Board the opportunity for at least 10 days review. If the Contractor disputes the findings of the independent auditor, such dispute shall be handled in the manner set forth under Article 4.6.2.

If Contractor having agreed to the terms of this Contract fails to produce books or records requested by Auditor, such failure to produce books or records that were required to be preserved for audit, it shall be presumed that the information contained in the withheld books or records were unfavorable to the Contractor and the Auditor shall note this refusal in the results of the Audit findings for further

evaluation by the District and the District's Board. The refusal to release records that are concerning monies associated with the Project may be used as a grounds to debar the Contractor under Article 15 for failure to preserve records under Article 13.11 and the failure to produce required audit records may also be used as a grounds for a negative finding against the Contractor depending on the significance of the records that are withheld by Contractor. Failure to produce job cost data tied to job cost categories and budgets shall be presumed an intentional failure to produce key audit records. Similarly, failure to produce Daily Reports (prepared at or near the time of the Work actually took place (See Article 3.16) shall be presumed an intentional failure to produce key audited records.

If Contractor is seeking costs for inefficiency, home office overhead, or unanticipated increased costs due to delays or acceleration, Contractor shall also produce copies of the original bid tabulation utilized in submitting Contractor's bid for the Project. This document shall be considered confidential and shall not be subject to disclosure through a Public Records Act and shall not be distributed to anyone other than the District and the District's counsel. This bid tabulation shall only be used in litigation, arbitration, evaluation of Claims or Disputes, Audit, and trial. If the records for the bid tabulation are kept on a computer, the Contractor shall also produce all metadata (in native format) that accompanies the bid tabulation for inspection to prove the authenticity of the underlying bid tabulation. Failure to produce the bid tabulation for review of inefficiency, home office overhead, or unanticipated increased costs due to delays or accelerations shall be considered material evidence that the bid tabulation was not favorable to the Contractor. This evidence shall be entered as a jury instruction for trial that the bid tabulation was not produced and the bid tabulation information was unfavorable to the Contractor. The evidence may also be used in debarment proceedings, and noted as an exception to an Audit findings.

Upon notification of Contractor concerning the results of the audit and a reasonable time has passed for Contractor to respond to the Audit findings and if either there is no Dispute of the Audit findings under Article 4.6 or if the result after utilizing the Disputes Clause confirms the Audit findings, the District may seek reimbursement for overstated Disputes, Claims, or Change Orders and may also undertake debarment proceedings under Article 15 of these General Conditions.

13.12 STORM WATER POLLUTION PREVENTION

13.12.1 Application

This Section addresses the preparation, implementation and monitoring of a Storm Water Pollution Prevention Plan (SWPPP) for the purpose of preventing the discharge of pollutants from the construction site. This includes the elimination of pollution discharges such as improper dumping, spills or leakage from storage tanks or transfer areas. The District will not issue a Notice to Proceed until Contractor has prepared by a qualified individual and obtained approval of the Permit Registration Documents ("PRDs") that include a Notice of Intent, Construction Risk Calculation, Site Map, SWPPP, Annual Fee and any additional required documents from all applicable Local Governing Agencies including the Regional Water Quality Control Board. The Contractor shall also secure a certification that the Project has met all of the conditions of the General Construction Activity Storm Water Permit (GCASP) and comply with all applicable local, state and federal regulations governing storm water pollution prevention.

13.12.2 References and Materials

- California Stormwater Quality Association New Development and Redevelopment Best Management Practice Handbook

- 2009 California Stormwater Quality Association Construction BMP Handbook .

- State Water Resources Control Board (2009). Order 2009-0009-DWQ, NPDES General Permit No. CAS000002: Waste Discharge Requirements for Discharges of Storm Water Runoff Associated with Construction and Land Disturbing Activities. Available on-line at:

- http://www.waterboards.ca.gov/water_issues/programs/stormwater/construction.shtml.- Use materials of a class, grade and type needed to meet the performance described in the BMP Handbook.

13.12.3 Preparation and Approval

The Contractor shall prepare by a qualified individual the PRDs that include a Notice of Intent, Construction Risk Calculation, Site Map, SWPPP, Annual Fee and any additional required documents. The Contractor's Qualified SWPPP Developer ("QSD") shall prepare the Storm Water Pollution Prevention Plan (SWPPP) as required to comply with storm water pollution regulations for project sites with storm water discharges associated with construction activity such as clearing or demolition, grading, excavation and other land disturbances. The SWPPP shall apply to all areas that are directly related to construction activity, including but not limited to staging areas, storage yards, material borrow areas, and access roads.

13.12.3.1 The Contractor shall prepare and submit to the Local Governing Agencies and the District the SWPPP for review and approval if the project sites, new or existing, with land disturbance of 1 or more acres (or less than 1 acres if part of a common plan of development); the construction activity that results in land surface disturbances of less than one acre is part of a larger common plan of development or sale of one or more acres of disturbed land surface; or the construction activity associated with Linear Underground/Overhead Projects ("LUPs") including, but not limited to, those activities necessary for the installation of underground and overhead linear facilities (e.g., conduits, substructures, pipelines, towers, poles, cables, wires, connectors, switching, regulating and transforming equipment and associated ancillary facilities) and include, but are not limited to, underground utility mark-out, potholing, concrete and asphalt cutting and removal, trenching, excavation, boring and drilling, access road and pole/tower pad and cable/wire pull station, substation construction, substructure installation, construction of tower footings and/or foundations, pole and tower installations, pipeline installations, welding, concrete and/or pavement repair or replacement, and stockpile/borrow locations.

13.12.3.2 The Contractor shall also pay annual renewal fee(s) until the contract is completed and make all such checks payable to the State Water Resources Control Board. The Notice of Intent must be submitted at least two weeks prior to the commencement of construction activities.

13.12.3.3 The Contractor shall prepare the SWPPP by following the format in Sections 2, 3, 4 and Appendices A through F of the California Stormwater BMP Handbook - Construction, January 2009 edition, published by the California Stormwater Quality Association. The publication is available from:

California Stormwater
Quality Association
P.O. Box 2105
Menlo Park, CA 94026-2105
Phone: (650) 366-1042
E-mail: info@casqa.org

or

https://www.casqa.org/store/products/tabid/154/p-167-construction-handbookportal-initial-subscription.aspx

13.12.3.4 Where land disturbance is less than 1 acre, any BMPs indicated in the BMP Handbook needed to prevent or minimize storm water pollution shall be implemented at no extra cost to the District.

13.12.3.5 Within two weeks after Award of Contract by the District, the Contractor shall submit to the District's Civil Engineer one copy of the PRDs including the SWPPP for review. After the District's approval, the Contractor shall provide approved copies of the SWPPP as follows: one copy each to the Project Inspector, Construction Manager, Architect, Commissioned Architect and District's Civil Engineer.

13.12.4 Implementation

The Contractor shall implement the Storm Water Pollution Prevention Plan by doing the following:

a. Obtain a Waste Discharger Identification (WDID) number from the SWRCB before beginning construction. This number will be issued once your PRDs are administratively accepted and fee is received.

b. Keep the SWPPP, REAPs, monitoring data on the construction site.

c. Employ a Qualified SWPPP Practitioner (QSP) to implement the SWPPP during construction and develop Rain Event Action Plans ("REAPs").

d. Install, inspect, maintain and monitor BMPs required by the General Permit.

e. Install perimeter controls prior to starting other construction work at the site.

f. Contain on-site storm water at the jobsite. Do not drain on-site water directly into the storm drain.

g. Implement the SWPPP.

h. Provide SWPPP and BMP implementation training for those responsible for implementing the SWPPP.

i. Designate trained personnel for the proper implementation of the SWPPP.

j. Conduct monitoring, as required, and assess compliance with the Numeric Action Levels (NALs) or Numeric Effluent Limitations (NELs) appropriate to your project.

k. Report monitoring data:

1. Maintain a paper or electronic copy of all required records for three years from the date generated or date submitted, whichever is last. These records must be available at the construction site until construction is completed.

2. Have a QSD revise the SWPPP as needed to reflect the phases of construction and to suit changing site conditions and instances when properly installed systems are ineffective.

3. Assist the District with entering any necessary data or information into the Stormwater Multi-Application and Reporting System ("SMARTS") system.

l. At the end of Construction Contract:

1. Submit Notice of Termination (NOT) into the SMARTS when construction is complete and conditions of termination listed in the NOT have been satisfied. A copy of the NOT can be found at: http://www.waterboards.ca.gov/water_issues/programs/stormwater/construction.shtml.

2. Leave in place storm water pollution prevention controls needed for post-construction storm water management and remove those that are not needed as determined by the District. Thereafter, left-in-place controls will be maintained by the District.

3. Provide Site Monitoring Reports, SWPPP revisions, Compliance Certifications and related documents to the District. Post-construction storm water operation and management plan as mentioned in the compliance certifications are considered to be in place at the end of the Construction Contract.

13.12.5 Monitoring

The Contractor shall conduct examination of storm water pollution prevention controls as required by the State Water Resources Control Board (2009). Order 2009-0009-DWQ, NPDES General Permit No. CAS000002: Waste Discharge Requirements for Discharges of Storm Water Runoff Associated with Construction and Land Disturbing Activities. This includes properly qualified personnel performing all required monitoring, testing, inspections and monitoring. The Contractor shall also conduct examination of storm water pollution prevention controls, as well as before and after each storm event in compliance with the State Water Resources Control Board Order No. 2009-0009-DWQ, National Pollutant Discharge Elimination System General Permit No. CAS000002, Waste Discharge Requirements for Discharges of Storm Water Runoff Associated with Construction and Land Disturbance Activities (General Permit) (SWRCB, 2009).and at least once each 24-hour period during extended storm events to identify BMP effectiveness and implement repairs or BMP changes as soon as feasible. All maintenance related to a storm event should be completed within 48 hours of the storm event. The Contactor shall also prepare and maintain, at the jobsite, a log of each inspection using Site Monitoring Report forms.

13.12.6 Liabilities and Penalties

a. Review of the SWPPP and inspection logs by the District shall not relieve the Contractor from liabilities arising from non-compliance with storm water pollution regulations.

b. Payment of penalties for non-compliance by the Contractor shall be the sole responsibility of the Contractor and will not be reimbursed by the District.

c. Compliance with the Clean Water Act pertaining to construction activity is the sole responsibility of the Contractor. For any fine(s) levied against the District due to non-compliance by the Contractor, the District will deduct from the final payment due the Contractor the total amount of the fine(s) levied on the District, plus legal and associated costs.

d. The Contractor shall submit to the District a completed NOI for change of information (Construction Site Information and Material Handling/Management Practices).

ARTICLE 14
TERMINATION OR SUSPENSION OF THE CONTRACT

14.1 TERMINATION BY THE CONTRACTOR FOR CAUSE

14.1.1 Grounds for Termination

The Contractor may terminate the Contract if the Work is stopped for a period of thirty (30) consecutive days through no act or fault of the Contractor, a Subcontractor, a Sub-subcontractor, their agents or employees, or any other persons performing portions of the Work for whom the Contractor is contractually responsible, for only the following reasons:

a. Issuance of an order of a court or other public authority having jurisdiction; or

b. An act of the United State or California government, such as a declaration of national emergency.

14.1.2 Notice of Termination

If one of the above reasons exists, the Contractor may, upon written notice of seven (7) additional days to the District, terminate the Contract and recover from the District payment for Work executed and for reasonable costs verified by the Architect with respect to materials, equipment, tools, construction equipment, and machinery, including reasonable overhead, profit, and damages.

14.2 TERMINATION BY THE DISTRICT FOR CAUSE

14.2.1 Grounds for Termination

The District may terminate the Contractor and/or this Contract for the following reasons:

a. Persistently or repeatedly refuses or fails to supply enough properly skilled workers or proper materials;

b. Persistently or repeatedly is absent, without excuse, from the job site;

c. Fails to make payment to Subcontractors, suppliers, materialmen, etc.;

d. Persistently disregards laws, ordinances, rules, regulations, or orders of a public authority having jurisdiction;

e. Fails to provide a schedule or fails or refuses to update schedules required under the Contract;

f. Falls behind on the Project and refuses or fails to undertake a Recovery Schedule;

g. If the Contractor has been debarred from performing Work

h. Becomes bankrupt or insolvent, including the filing of a general assignment for the benefit of creditors; or

i. Otherwise is in substantial breach of a provision of the Contract Documents.

14.2.2 Notification of Termination

When any of the above reasons exist, the District may, without prejudice to any other rights or remedies of the District and after giving the Contractor and the Contractor's Surety written notice of seven (7) days, terminate the Contractor and/or this Contract and may, subject to any prior rights of the Surety:

a. Take possession of the Project and of all material, equipment, tools, and construction equipment and machinery thereon owned by the Contractor;

b. Accept assignment of Subcontracts. Contractor acknowledges and agrees that if the District (in its sole and absolute discretion) decides to takeover completion of the Project, the Contractor agrees to immediately assign all subcontracts to the District which the District has chosen to accept;

c. Complete the Work by any reasonable method the District may deem expedient, including contracting with a replacement contractor or contractors; and,

d. Agree to accept a takeover and completion arrangement with Surety that is acceptable to the District Board.

14.2.3 Takeover and Completion of Work after Termination for Cause

A Termination for Cause is an urgent matter which requires immediate remediation since Project Work is open and incomplete, the site is subject to vandalism and theft, the Project site is considered a public nuisance, and there is a possibility of injury and deterioration of the Project Work and materials. Thus, the District shall be entitled to enter a takeover contract to either remediate the unfinished condition or complete the Work for this Project.

14.2.4 Payments Withheld

If the District terminates the Contract for one of the reasons stated in Article 14.2.1, the Contractor shall not be entitled to receive further payment until the Work is complete. All costs associated with the termination and completion of the Project shall be the responsibility of the Contractor and/or its Surety.

14.2.5 Payments upon Completion

If the unpaid balance of the Contract Sum exceeds costs of completing the Work, including compensation for professional services and expenses made necessary thereby, such excess shall be paid to the Contractor. If such costs exceed the unpaid balance, the Contractor and its Surety shall pay the difference to the District. The amount to be paid to the Contractor, or District, as the case may be, shall be certified by the Architect upon application. This payment obligation shall survive completion of the Contract.

14.2.6 Conversion of Termination Upon Determination by Any Court or Other Tribunal

In the event the Contract or Contractor's performance of the Contract is terminated under Article 14.2, and it is finally determined by an arbitrator, court, jury or other tribunal having jurisdiction, for any reason, that the Contractor was not in default under the provisions hereof, or that the District's exercise of its rights under Article 14.2 was defective, deficient, ineffective, invalid or improper for any reason, the termination shall be deemed a Termination for Convenience by the District and thereupon, the rights and obligations of the District and the Contractor shall be determined in accordance with Article 14.3 .1 hereof.

14.3 TERMINATION OF CONTRACT BY DISTRICT (CONTRACTOR NOT AT FAULT)

14.3.1 Termination for Convenience

District may terminate the Contract upon fifteen (15) calendar days of written notice to the Contractor and use any reasonable method the District deems expedient to complete the Project, including contracting with replacement contractor or contractors, if it is found that reasons beyond the control of either the District or Contractor make it impossible or against the District's interest to complete the Project. In such a case, the Contractor shall have no Claims against the District except for: (1) the actual cost for approved labor, materials, and services performed in accordance with the Contract Documents which have not otherwise been previously paid for and which are supported and documented through timesheets, invoices, receipts, or otherwise; and (2) profit and overhead of ten percent (10%) of the approved costs in item (1); and (3) termination cost of five percent (5%) of the approved costs in item (1). Contractor acknowledges and agrees that if the District (in its sole and absolute discretion) decides to takeover completion of the Project, the Contractor agrees to immediately assign all subcontracts to the District which the District has chosen to accept.

14.3.2 Non-Appropriation of Funds/ Insufficient Funds

In the event that sufficient funds are not appropriated to complete the Project or the District determines that sufficient funds are not available to complete the Project, District may terminate or suspend the completion of the Project at any time by giving written notice to the Contractor. In the event that the District exercises this option, the District shall pay for any and all work and materials completed or delivered onto the site for which value is received, and the value of any and all work then in progress and orders actually placed which cannot be canceled up to the date of notice of termination. The value of work and materials not otherwise already paid for by the District up to the time of termination under this Paragraph shall include a factor of fifteen percent (15%) for the Contractor's overhead and profit and there shall be no other costs or expenses paid to Contractor. All work, materials and orders paid for pursuant to this provision shall become the property of the District. District may, without cause, order Contractor in writing to suspend, delay or interrupt the Project in whole or in part for such period of time as District may determine. Adjustment shall be made for increases in the cost of performance of the Agreement caused by suspense, delay or interruption.

14.4 REMEDIES OTHER THAN TERMINATION

If a default occurs, the District may, without prejudice to any other right or remedy, including, without limitation, its right to terminate the Contract pursuant to Article 14.2, do any of the following:

a. Permit the Contractor to continue under this Contract, but make good such deficiencies or complete the Contract by whatever method the District may deem expedient, and the cost and expense thereof shall be deducted from the Contract Price or paid by the Contractor to the District on demand;

b. If the workmanship performed by the Contractor is faulty or defective materials are provided, erected or installed, then the District may order the Contractor to remove the faulty workmanship or defective materials and to replace the same with work or materials that conform to the Contract Documents, in which event the Contractor, at its sole costs and expense, shall proceed in accordance with the District's order and complete the same within the time period given by the District in its notice to the Contractor; or

c. Initiate procedures to declare the Contractor a non-responsible bidder for a period of two (2) to five (5) years thereafter.

All amounts expended by the District in connection with the exercise of its rights hereunder shall accrue interest from the date expended until paid to the District at the maximum legal rate. The District may retain or withhold any such amounts from the Contract Price. If the Contractor is ordered to replace any faulty workmanship or defective materials pursuant to Paragraph (b) above, the Contractor shall replace the same with new work or materials approved by the Architect and the District, and, at its own cost, shall repair or replace, in a manner and to the extent the Architect and the District shall direct, all Work or material that is damaged, injured or destroyed by the removal of said faulty workmanship or defective material, or by the replacement of the same with acceptable work or materials. In no event shall anything in this Article be deemed to constitute a waiver by the District of any other rights or remedies that it may have at law or in equity, it being acknowledged and agreed by the Contractor that the remedies set forth in this Article are in addition to, and not in lieu of, any other rights or remedies that the District may have at law or in equity.

ARTICLE 15
DEBARMENT

15.1 DEBARMENT MEANS THERE HAS BEEN A FINDING THAT THE CONTRACTOR IS NOT RESPONSIBLE.

During the course of the Project, or if it is determined through Change Orders, Claims, or Audit that a Contractor is not responsible, the District may, in addition to other remedies provided in the Contract, debar the Contractor from bidding or proposing on, or being awarded, and/or performing work on District contracts for a specified period of time, which generally will not exceed five (5) years, but may exceed five (5) years or be permanent if the circumstances warrant such debarment. In addition to the debarment proceeding, a finding that a Contractor is to be debarred shall result in the termination of any or all existing Contracts the Contractor may have with the District.

15.2 BOARD FINDING

The District may debar a Contractor if the Board, or the Board's delegatee, in its discretion, finds the Contractor has done any of the following:

15.2.1 Intentionally or with reckless disregard, violated any term of the Contract with the District

15.2.2 Committed an acts or omission which reflects on the Contractor's quality, fitness or capacity to perform Work for the District;

15.2.3 Committed an act or offense which indicates a lack of business integrity or business honesty; or,

15.2.4 Made or submitted a false claim against the District or any other public entity.

15.3 HEARING AND PRESENTATION OF EVIDENCE

If there is evidence that the Contractor may be subject to debarment, the District shall notify the Contractor in writing of the evidence which is the basis for the proposed debarment and shall advice the Contractor of the scheduled date for a debarment hearing before the District Board or its delegated designee.

The District Board, or designee, shall conduct a hearing where evidence on the proposed debarment is presented. The Contractor or the Contractor's representative shall be given an opportunity to submit evidence at the hearing. The Contractor shall be provided an adequate amount of time to prepare and object to evidence presented. A tentative proposed decision shall be issued as a tentative decision and the District shall be entitled to modify, deny or adopt the proposed decision. The proposed decision shall contain a recommendation regarding whether the Contractor should be debarred, and, if so, the appropriate length of time of the debarment. The Contractor and the District shall be provided an opportunity to object to the tentative proposed decision for a period of 15 days. If additional evidence is presented, the District shall evaluate this evidence and either issue an amended ruling, issue the same ruling, or call a further hearing.

If a Contractor has been debarred for a period of longer than five (5) years, that Contractor may after the debarment has been in effect for at least five (5) years, submit a written request for review of the debarment determination to reduce the period of debarment or terminate the debarment. The District may,

in its discretion, reduce the period of debarment or terminate the debarment if it finds that the Contractor has adequately demonstrated one or more of the following: (1) elimination of the grounds for which the debarment was imposed; (2) a bona fide change in ownership or management; (3) material evidence discovered after debarment was imposed; or (4) any other reason that is in the best interests of the District.

The District will consider a request for review of a debarment determination only where: (1) the Contractor has been debarred for a period longer than five (5) years; (2) the debarment has been in effect for at least five (5) years; and (3) the request is in writing, states one or more of the grounds for reduction of the debarment period or termination of the debarment, and includes supporting documentation. Upon receiving an appropriate request, the District will provide notice of the hearing on the request. At the hearing, the District shall review evidence on the proposed reduction of debarment period. This hearing shall be conducted and the request for review decided by the District pursuant to the same procedures as for a debarment hearing.

The District's proposed decision shall contain a recommendation on the request to reduce the period of debarment or terminate the debarment.

The terms shall also apply to Subcontractors of Contractor.

EXHIBIT A: Owner Controlled Insurance Program (OCIP)

OWNER CONTROLLED INSURANCE PROGRAM (OCIP)

1.1 INTRODUCTION

The District, hereinafter referenced as "District" or "Owner", has elected, at its sole discretion, to implement an Owner Controlled Insurance Program ("OCIP") under the Statewide Educational Wrap Up Program ("SEWUP"). The SEWUP Joint Powers Authority ("JPA") will be providing the OCIP on behalf of the Owner. All terms and conditions of the SEWUP Contractual Provisions will apply during the term of the contract.

The SEWUP JPA will provide Workers' Compensation, Employer's Liability, General & Excess Liability, and Contractor's Pollution Liability for all Enrolled Contractors (and their Enrolled Subcontractors of every tier) and other designated parties for work performed at the Project Site (hereinafter called "Project") as well as Builder's Risk insurance. The Owner agrees to pay all premiums associated with the OCIP, unless otherwise stated in this section and in other contract documents. The OCIP coverages will be primary to other valid and collectable insurance for the owner and enrolled parties in the program.

Insurance coverage provided under the OCIP is limited in scope and specific to work performed after the inception date of enrollment into the OCIP. Labor and ongoing operations related to offsite locations are not covered by the OCIP. In addition to any insurance provided by the Owner, all Contractors/Subcontractors will be responsible for providing certain insurance as specified in section 1.7. The Owner recommends that Contractors discuss the OCIP with their insurance agents, brokers or consultants to ensure that other proper coverages are maintained prior to contract acceptance.

Keenan & Associates, hereinafter called "Program Administrator", shall administer the OCIP on behalf of the SEWUP JPA. At all times, all Contractors/Subcontractors shall: (a) cooperate with Owner, Program Administrator, and all OCIP insurers, as applicable, and their respective consultants, agents and representatives, in its or their administration of the OCIP and all other terms and conditions described herein, and (b) comply with the terms, conditions, warranties, and subjectivities of the insurance policies provided pursuant to the OCIP, including, without limitation, any and all directives and requirements of Owner's and the OCIP insurers' respective consultants, agents and representatives, including, without limitation, any directive or requirement relating to loss control, and quality control, and the closure to Owner's satisfaction of open items on any and all quality control checklists and inventories.

A. Participation in the OCIP

Participation in the OCIP is mandatory but not automatic. Each Eligible Contractor/Subcontractor must follow the guidelines, as specified in section 1.5.

Definitions:

Enrollment: Required application and documents to be submitted by Contractors/Subcontractors of all tiers for review by the OCIP Program Administrator for submission to the insurer. (See Sections 1.7 and 1.8)

Contractor: Includes all vendors, suppliers, businesses, persons, or entities and entities which the Owner has engaged directly by contract to perform services relating to the Project.

Subcontractor: Includes, but is not limited to, all businesses, vendors, suppliers, and other persons or entities that have been engaged by a Contractor to perform or assist with the performance of services relating to the Project, including all sub-tier contractors.

Enrolled Contractor: All Eligible Contractors/Subcontractors of all tiers are considered Enrolled once required application and documents are received, reviewed, and processed by the OCIP Program Administrator and submitted to the insurer. (See Sections 1.7 and 1.8)

Eligible: Includes all Contractors/Subcontractors providing direct labor on the Project, and excludes Ineligible Contractors, as defined below. Temporary labor services and leasing companies are to be treated as Eligible Contractors.

Ineligible: It is not the intent to insure certain entities and scopes of work, including, but not necessarily limited to the following: consultants; suppliers; abatement and/or removal of hazardous materials; vendors; off-site fabricators; materials dealers; surveyors; guard services; non-construction janitorial services; and truckers, including trucking to the Project where delivery is the only scope of work performed; and contractors performing landscape maintenance (though landscape work itself is covered). Ineligible parties are required to ensure that any (of their) eligible subcontractors who provide on-site labor comply with the OCIP Enrollment requirements. Program Administrator reserves the right to reconsider any entity's participation in the OCIP should its scope of work or contract change at any time. **Any questions regarding a contractor's status as "Eligible" or "Ineligible" should be referred by written request to Owner and must be approved by the Program Administrator.**

EACH CONTRACTOR/SUBCONTRACTOR MUST INCLUDE THIS DOCUMENT WITH THEIR BID SPECIFICATIONS TO ANY AND ALL SUBCONTRACTORS, INCLUDING ALL SUB-TIER SUBCONTRACTORS. Any contractor/subcontractor's failure to comply with the OCIP Administrator and all OCIP requirements shall be considered non-compliant under the contract.

Enrollment of each Contractor's eligible Subcontractors is mandatory. Contractor shall notify Owner and the Program Administrator in writing of the identity of each Subcontractor regardless of enrollment eligibility and shall cause each Subcontractor to notify the Program Administrator in writing of the identity of each of its Sub-subcontractors, prior to such party's commencement of their work and entry onto the Project. Contractors and Subcontractors of all tiers shall not be deemed enrolled until the Program Administrator and OCIP insurers receive and approve a completed Contract Enrollment Form for each awarded contract. Enrollment is required prior to commencement of on-site activities but no contractor shall be enrolled sooner than 30 days prior to their start date. Each Contractor/Subcontractor shall be solely responsible for any and all losses, damages, claims, liabilities, and suits arising out of such Subcontractor's failure to enroll, or delay in enrolling, any of its Subcontractors.

Unless otherwise directed by the Owner, Ineligible Contractors and Subcontractors will be required to maintain their own insurance for both on-site and off-site activities and will be required to participate in the Project Safety Program (See Section 1.16). Minimum Insurance and endorsement requirements are located in Sections 1.7 & 1.8. Each ineligible contractor must register with the OCIP's online portal ("WrapPortal"). All required certificates and endorsements must be supplied via WrapPortal.

B. Project Site and Offsite Premises

Coverages provided by the OCIP are **Project Site** specific. The Project Site shall be designated by the Owner. The Project Site consists of any and all projects that are endorsed to this policy, which includes the following:

1. Ways and means adjoining the endorsed project site
2. Adjacent locations to the endorsed project sites where incidental operations are being performed, excluding permanent locations

With the exception of 1 and 2 mentioned above, off-site locations, labor and ongoing operations are not covered by the OCIP. It will be the responsibility of each Contractor/Subcontractor to maintain off-site insurance, as identified in Section 1.7, which specifies coverage types and minimum limits. Contractor/Subcontractor will promptly furnish to the Owner, or its designated representative, Certificates of Insurance evidencing that all required insurance is in force.

1.2 PREQUALIFICATION & COST IDENTIFICATION

A. Contractor Pre-Qualification

Pursuant to Government Code Section 4420.5, Bidders must meet certain minimum standards to bid on the Owners' Project. The following qualification standards apply to ALL Bidding Contractors at time of bid opening:

1. **Average Workers' Compensation Experience Modification Rate (EMR) of 1.25 or less over the last five (5) years OR the current published year.**
   - ***We encourage the bidder to choose subcontractors who meet these requirements however this will not exclude eligible subcontractors from enrolling in the OCIP.***
2. **Zero (0) Serious and Willful violations (Labor Code Section 6300) against them in the past five (5) years**
3. **Evidence of an Injury and Illness Prevention Program (IIPP). Evidence is required to be submitted post bid opening and prior to bid award.**

FAILURE TO MEET THESE MINIMUM STANDARDS SHALL DISQUALIFY THE BIDDER.

B. Contractor Insurance Cost Identification

Contractor's base bid shall exclude all costs for insurance coverages provided under the OCIP. If insurance cost is not removed, the bidder may not qualify as the lowest responsive bidder. The Bidder declares under penalty of perjury under California law, that the base bid excludes any costs relating to any insurance coverages afforded under the OCIP and that each subcontractor to the Bidder has similarly excluded costs for any insurance coverage afforded under the OCIP.

C. Change Order Pricing

All Contractors/Subcontractors declare, under penalty of perjury under California law, that any change order issued to the contract is priced to exclude any costs relating to any insurance coverage afforded under the OCIP.

1.3 OWNER-PROVIDED INSURANCE COVERAGES

CONTRACTOR/SUBCONTRACTOR SHOULD REFER TO THE ACTUAL POLICIES FOR DETAILS CONCERNING COVERAGE, EXCLUSIONS, AND LIMITATIONS. THE ORIGINAL POLICIES WILL PREVAIL AS THE SOLE BINDING AGREEMENT IN CONNECTION WITH ANY CLAIM OR QUESTION REGARDING COVERAGE PROVIDED BY THE OCIP. OCIP POLICIES AND THE PROJECT INSURANCE MANUAL ARE AVAILABLE UPON WRITTEN REQUEST TO THE PROGRAM ADMINISTRATOR.

THE OCIP IS INTENDED TO PROVIDE BROAD COVERAGES AND HIGH LIMITS TO ALL ENROLLED CONTRACTORS/SUBCONTRACTORS. THE OWNER DOES NOT WARRANT OR REPRESENT THAT THE OCIP COVERAGES CONSTITUTE AN INSURANCE PROGRAM THAT COMPLETELY ADDRESSES THE RISKS OF THE CONTRACTORS/SUBCONTRACTORS. PRIOR TO CONTRACT AWARD, IT IS THE RESPONSIBILITY OF ALL CONTRACTORS/SUBCONTRACTORS TO ENSURE THAT THE OCIP COVERAGES PROVIDED SUFFICIENTLY ADDRESS THEIR INSURANCE NEEDS. UPON REQUEST, OCIP POLICIES ARE AVAILABLE FOR REVIEW.

OCIP coverage applies only to Work performed under the contract at the Project (see Section 1.1, B for definition). All Contractors must provide their own insurance for Automobile Liability and off-site locations, labor, and operations.

Such policies or programs may be amended from time to time, and the terms of such policies or programs, as amended, are incorporated herein by reference.

The Contractors/Subcontractors enrolled in the OCIP agree that the OCIP policies' limits of liability, coverage terms, and conditions shall determine the scope of coverage provided by the OCIP. As of October 1, 2025, 100% of the limits are available.

A. **Workers' Compensation and Employer's Liability Insurance will be provided in accordance with applicable state laws to all Enrolled Contractors/Subcontractors (each as a named insured, and issued an individual policy) reflecting the following Limits of Liability:**

Workers' Compensation: California Statutory Benefits

Employer's Liability:

- $1,000,000 Bodily Injury each Accident
- $1,000,000 Bodily Injury by Disease – Policy Limit
- $1,000,000 Bodily Injury by Disease – Each Employee

1. Deductible: None
2. Exclusions: The known exclusions for this coverage are set forth below:

- Bodily Injury Outside US or Canada
- Bodily Injury To Any Member of Flying Crew
- Bodily Injury To Person Subject To Federal Workers' Compensation
- Bodily Injury To Person Subject To Occupational Disease Laws
- Contractual Liability
- Employees Knowingly Employed Illegally
- Employment Related Practices
- Intentional or Aggravated Bodily Injury
- Obligations Imposed By Disability Benefits or Any Similar Law
- Obligations Imposed By Occupational Disease Laws
- Obligations Imposed By Unemployment Compensation Laws
- Obligations Imposed By Workers' Compensation Laws
- State or Federal Law Violation Fines, Penalties

This is a summary and may not be exhaustive. The policy language may contain additional exclusionary language, limitations or carve-backs that are not identified on the table. It is the responsibility of the Contractor/Subcontractor to review the policy for the complete details of all exclusions.

3. **Policy Term**: The master policy effective date is October 1, 2025. The policy term is three years, with one automatic two-year renewal. The policy is intended to remain in effect for the length of the construction of the Project or through October 1, 2030 at 12:01am, whichever comes first. Warranty work and post contract repair work is excluded. Contractor and each Subcontractor is insured under the policy for the length of its work at the Project, or the policy end date, whichever comes first.
4. Workers' Compensation claims handled by this OCIP are still reflected in an Enrolled Contractor's Experience Modification Rating (EMR). Claims occurring on this OCIP project will impact an Enrolled Contractor's EMR the same way as claims occurring on non-OCIP work.

B. **General and Excess Liability Insurance is written on an "Occurrence" form under master liability policies. Certificates of Insurance will be provided to all enrolled Contractors/Subcontractors as named insureds, with the total limits of liability reflecting the following*:**

- $125,000,000 Each Occurrence
- $195,000,000 General Liability Aggregate
- $125,000,000 Products / Completed Operations Aggregate Limit

*The noted limits apply to the 10 Year Extended Completed Operations Coverage Term with no reinstatement (see Section 1.3.B.4.b)

1. Deductible: None
2. Conditional Warranties*:
   a. **Subsidence:** It is expressly warranted that the Named Insured and all Contractors and Sub-Contractors comply with all recommendations contained in the geotechnical/ environmental reports. Failure to comply will result in subsidence coverage being null and void and a full subsidence exclusion would be re-instated.
   b. **EIFS Installation Agreement**: The following terms and conditions shall be satisfied in connection with all EIFS work on any Project:
      i. EIFS work is to be specifically identified, and its value declared.
      ii. All EIFS work will be monitored by an independent EIFS inspection company to document compliance with manufacturers' handling and installation instructions.
      iii. EIFS product manufacturers and warranty providers will be identified and provided to the Owner.
3. Exclusions: The known exclusions for this coverage are set forth below:

- Aircraft, Auto or Watercraft
- Asbestos
- Medical Payments Coverage
- Certain Exclusions to Personal and Advertising Injury Liability
- Certified Acts of Terrorism
- Communicable Disease
- Contractual Liability (Limited Coverage Provided)
- Cross Suits – Limited
- Cyber and Data
- Employers Liability
- Employment Related Practices
- Expected or Intended Injury
- Fungi Or Bacteria
- Lead
- Certain exclusions for transportation or use of "Mobile Equipment"
- Nuclear
- Personal and Advertising Bodily Injury
- Pollution and Hazardous Materials
- Prior Continuous, or Progressively Deteriorating Injury or Damage
- Professional Liability
- Property Damage to the Project During the Course of Construction
- Punitive Damages
- Residential and Condominium Conversion
- Recall of Products, Work Or Impaired Property
- Silica or Silica Mixed Dust
- Subsidence - Conditional Warranty – So long as Contractor/Subcontractors follows specifications of geotechnical/environmental reports then the exclusion will be waived; if not, exclusion will be fully implemented
- Violation of Statutes Governing Collecting, Transmitting Information
- Violation of Statutes Governing Email, Fax, Phone Calls
- War
- Workers' Compensation and Similar Laws

This is a summary and may not be exhaustive. The policy language may contain additional exclusionary language, limitations or carve-backs that are not identified on the tables. It is the responsibility of the Contractor/Subcontractor to review the policy for the complete details of all exclusions and policy terms.

4. **Policy Term**:
   a. The master policy effective date is October 1, 2025. The policy is intended to remain in effect for the length of the construction of the Project or through October 1, 2030 at 12:01am, whichever comes first.
   b. The policy provides an Extended Products-Completed Operations Hazard Period of a maximum of 10 years from the date of substantial completion of the Project

C. Contractor's Pollution Liability is written under a master liability policy. Certificates of Insurance will be provided to all enrolled Contractors/Subcontractors, as named insured, reflecting the following Limits of Liability and Self Insured Retention (SIR):

- $15,000,000 Per Claim / $25,000,000 Policy Aggregate
- Defense costs up to $1,000,000, which are outside of the Limits of Liability

1. $10,000 Self Insured Retention (SIR) Each Claim: Contractor/Subcontractor shall be liable for payment of the SIR, at its expense; to the extent claims payable are attributable to their acts or omissions and/or the acts or omissions of its Subcontractors of any tier or any other entity or person for whom it may be responsible. The SIR will apply to each occurrence and must be satisfied prior to payment of loss or expense by the carrier. The SIR amount shall not be reimbursed by the OCIP Insurance Program or the District.
2. Exclusions: The known exclusions for this coverage are set forth below:

• Auto, Aircraft, Vessel Or Rolling Stock	• Nuclear
• Claims Between Certain Insureds	• Other Entities
• Contractual Liability	• Pre-Existing Conditions
• Damage To Property	• Products
• Fines, Penalties, and Treble Damages	• Terrorism
• Employment Related Practices	• War
• Owned Hazardous Materials Facility	• Workers' Compensation and Similar Laws

This is a summary and may not be exhaustive. The policy language may contain additional exclusionary language, limitations or carve-backs that are not identified on the table. It is the responsibility of the Contractor/Subcontractor to review the policy for the complete details of all exclusions.

3. Policy Term: The master policy effective date is October 1, 2025. The policy is intended to remain in effect for the length of the Project or through October 1, 2030 at 12:01am, whichever comes first.

D. Builder's Risk: coverage will be in place during the course of construction at the Project. Such insurance shall be written on a repair or replacement cost basis, subject to exclusions, sub limits, property limitations and conditions. Such insurance shall include the interests of the Owner as named insured and enrolled Contractors/Subcontractors as additional insureds. The deductible schedule is as follows:

Deductibles

- $5,000 - $50,000 deductible (depending on type of structure) for Wood Frame, Modular, Tilt-Up Construction, Joisted Masonry, and Fire Resistive / Non-Combustible / Masonry Non-Combustible.
- Up to $100,000 deductible for Water Damage to All Construction Types
- Deductibles are subject to increase if a Project's Builder's Risk term is extended 60 days or more.

1. Contractor/Subcontractors shall be responsible for the applicable deductible. The deductible shall apply to each occurrence and must be satisfied prior to payment of the loss. The deductible shall not be reimbursed by the OCIP Insurance Program or the District.

2. Exclusions: The known exclusions for this coverage are set forth below:

- Asbestos
- Certain Offsite Property
- Certain Release, Discharge, Escape, or Dispersal of Contaminants or Pollutants
- Certified Acts of Terrorism (Optional Coverage)
- Cessation of Work
- Consequential Loss (except as provided in Delay in Opening Coverage)
- Communicable Disease
- Contractor's Tools, Machinery, Plans, Equipment
- Cost of Making Good (Optional Coverage)
- Damage to Existing Property (Optional Coverage)
- Damage While Testing Prototype or Used Machinery/Equipment
- Damages, Fines, Penalties at Government Agency or Court Order
- Disappearance or When Revealed by Inventory Shortage Alone
- Earth Movement (Optional Coverage)
- Electrical, Magnetic, or Errors Related to Electronic Records
- Financial Accounts, Instruments, Stamps, Deeds, Precious Material
- Flood (Optional Coverage) (rain and the accumulation of rainwater included in Flood definition)
- Foreign Terrorism
- Infidelity, Dishonesty, Fraudulent Activity of Insured
- Land, Values of Land, Cut, & Fill etc. Prior to Project Commencement
- Loss Under Any Manufacturer or Supplier Guarantee/Warranty
- Normal Subsidence
- Nuclear
- Offshore or Barrier Island Property
- Property That Stores, Processes, or Handles Radioactive Materials
- Rolling Stock, Aircraft, Watercraft
- Software Loss, unless results from an Open Peril
- Standing Timber, Growing Crops, Animals
- Vehicles or Equipment Licensed For Highway Use
- War and Military Action

This builder's risk coverage and exclusion summary may not be all inclusive. The policy language may contain additional exclusionary language, limitations or carve-backs that are not identified on the table. It is the responsibility of the Contractor/Subcontractor to review the policy for the complete details of all exclusions, sublimit and deductibles.

3. **Special Conditions: <u>All Wood Frame and Modular projects are subject to</u> <u>Protective Safeguards as shown in A</u>**
4. **Policy Term**: The policy term is the term of the project.
5. **All Contractors/Subcontractors shall be responsible for any loss or damage to their personal property. This would include, but is not limited to, tools, equipment, mobile construction equipment, or materials NOT intended to be a permanent part of the building, whether owned, borrowed, used, leased, or rented by any Contractor/Subcontractor. Any insurance purchased by the Contractors/Subcontractors, or self-insurance, shall be the Contractors'/Subcontractors' sole source of recovery in the event of a loss.**

E. **OCIP Policies Establish OCIP Coverage**. The insurance coverages, limits of liability, definitions, terms, conditions, exclusions and limitations referenced in these contractual provisions and the other contract documents are set forth in full in the OCIP insurance policies. The summary descriptions of such policies in these contractual provisions, in the Project Insurance Manual, or in any other contract document or elsewhere are not intended to be complete or to alter or amend any provisions of the actual OCIP policies. To the extent, if any, such descriptions herein or therein conflict with any such insurance policies, the provisions of the actual insurance policies shall govern. To the extent there are any other conflicts between or among the provisions of such insurance policies, these contractual provisions, the contract documents, or the Project Insurance Manual, then in descending order, the insurance policies shall govern, followed by these contractual provisions, the contract, the other contract documents, then the Project Insurance Manual. Contractor/Subcontractor acknowledges that it has had the opportunity to review the insurance policies as provided in <u>Section 1.3</u>, and that it is relying solely on the provisions set forth in the insurance policies, and not upon any

oral or written statement or reference in these contractual provisions, any other contract document, the Project Insurance Manual, or otherwise.

1.4 OCIP CERTIFICATES AND POLICIES

All Enrolled Contractors/Subcontractors will receive Certificates of Insurance for Workers' Compensation, General Liability, Excess Liability and Contractor's Pollution Liability coverages. Each enrolled Contractor/Subcontractor will receive their own Workers' Compensation policy. Program Administrator will provide a copy of the OCIP policies upon written request. Such policies or programs may be amended from time to time and the terms of such policies or programs, as they may be amended, are incorporated herein by reference. Contractors/Subcontractors hereby agree to be bound by the terms of coverage, as contained in such insurance policies and/or self-insurance programs.

1.5 CONTRACTOR/SUBCONTRACTOR RESPONSIBILITIES

Participation in the OCIP is mandatory but not automatic. Contractor /Subcontractor must comply with the following:

A. Contractor Eligibility, see Section1.1, **A** for definition.

B. Contractor Registration & Enrollment

The Program Administrator will provide online registration via WrapPortal (see Section 1.1 A); a User Name, Password and URL for website enrollment will be provided to each Subcontractor upon entry of Subcontractor identifying information into WrapPortal by Contractor or Parent Subcontractor regardless of enrollment eligibility.

An Eligible Contractor/subcontractor is not enrolled until the Program Administrator and OCIP insurers receive and approve a completed OCIP Enrollment via WrapPortal for each awarded contract. Subcontractor shall also upload declarations pages, including proof of rates from Subcontractor's current policies. Enrollment is required prior to commencement of on-site activities but no Subcontractor shall be enrolled sooner than 30 days prior to their start date. Subcontractors must provide the Required Insurance Coverages (see Sections 1.7 and 1.8) via WrapPortal.

Any Subcontractor who enrolls in the OCIP after their start date must provide a No- Known-Loss Letter to the Program Administrator, along with the enrollment documentation. Late Enrollment is not guaranteed and must be approved and accepted by the insurance carrier. Upon approval, the Program Administrator will provide evidence of OCIP coverage to the Subcontractor, as noted in Section 1.4

All Contractors/Subcontractors of all tiers shall cooperate with and require their Subcontractors to cooperate with the Owner and the Program Administrator regarding the administration and operation of the OCIP.

C. Contractor/Subcontractor Compliance with Other Forms and Procedures

All Enrolled Contractors/Subcontractors are required to complete and submit the following forms:

1. **Project Site Monthly Payroll Report**
   Project Site Monthly Payroll must be submitted to the Program Administrator by the 10th of each month via WrapPortal until the completion of the contract and in no event shall be later than the 15th of each month. This report must summarize the unburdened payroll by Workers' Compensation Class Code. Certified payroll is not a requirement of the OCIP and cannot be accepted. **If the Project Site Monthly Payroll Report is not submitted to the Program Administrator, the Contractor, Construction Manager and/or Owner may withhold payment from the prime or parent contractor until the report is received.** Subcontractor agrees to keep and maintain accurate and classified records of their payroll for operations at the

Project Site. This payroll information is submitted to the OCIP insurer. At the end of each contract, a carrier audit may be performed using the reported payroll and other supporting documents, as required by the California Workers' Compensation Insurance Rating Bureau (WCIRB).

2. **Workers' Compensation Insurance Rating Bureau Requirements**
   Once an Eligible Contractor/Subcontractor is enrolled into the OCIP, a separate Workers' Compensation Policy will be issued to them. All Enrolled Contractors/Subcontractors shall comply with the rules and regulations of the California Workers' Compensation Insurance Rating Bureau (WCIRB).

3. **Contractor's Completion Notice**
   Contractor's Completion Notice must be submitted to the Program Administrator via WrapPortal upon completion of work at the Project, which includes punch list items, but not warranty work. Contractor/Subcontractor shall cooperate with Contractor in completing the *Contractor's Completion Notice*. The Contractor's Completion Notice shall evidence all enrolled Contractors/Subcontractors' **final contract value, actual start and completion dates**, per contract. This information is used to confirm that each Workers' Compensation Policy was issued with correct policy term dates, covering the Contractors/Subcontractors for the duration of their work at the Project. This information is subsequently submitted to the Workers' Compensation Insurance Rating Bureau (WCIRB).

4. **Project Insurance Manual**
   A Project Insurance Manual will be provided to all awarded Contractors/Subcontractors, which includes a Program Summary, Claims Reporting Instructions, Project Safety Guidelines, necessary forms, and contact information. Copies can be requested from the Program Administrator.

Contractor/Subcontractor Compliance with all aspects of the OCIP

All Contractors/Subcontractors further acknowledge and agree to comply fully and promptly with such safety, loss control, and quality control rules, requirements, and directives as may from time to time be promulgated by Owner, the Program Administrator and/or the OCIP insurers or any of its or their respective consultants, agents, or representatives. Neither the Contractor or Subcontractor of any tier shall impede or otherwise prevent Owner, their representatives or the Program Administrator or their respective consultants from entering or otherwise accessing the project or its related off-site locations. Nothing in this document, or any other contract document or in the Project Insurance Manual, shall be deemed to render Owner or any of its affiliates of any tier an employer of Contractor/Subcontractor or any of its Subcontractors or any of its or their personnel or employees. **Failure to comply will be considered non-performance under the contract.**

It is the obligation of each Eligible Contractor/Subcontractor to enroll in the OCIP and to comply with all OCIP requirements set forth in these contractual provisions, in the OCIP insurance policies, in the Project Insurance Manual, and elsewhere in the contract documents. Contractor/Subcontractor shall provide each of its Subcontractors, among other things, with a copy of the Project Insurance Manual and a copy of these contractual provisions. Contractor/Subcontractor shall require in writing that each enrolling Subcontractor comply with, among other things, the provisions of the OCIP insurance policies, the Project Insurance Manual, and the contract documents. All such requirements shall be included in all subcontracts and sub-subcontracts with eligible parties. The failure of Contractor/Subcontractor or any other party to provide eligible Subcontractors with a copy of this document, the Project Insurance Manual, and/or all other applicable requirements shall not relieve any such Subcontractor of any of the obligations contained therein.

Contractor/Subcontractor shall keep and maintain accurate records and information in accordance with the requirements of the OCIP Insurer(s), the Project Administrator, the Project Insurance

Manual, and the contract documents, and shall provide such records and information to Owner, the Program Administrator, and/or the OCIP insurers upon request.

1.6 OCIP DISCLAIMER

The Owner does not warrant or represent that the OCIP coverages constitute an insurance program that completely addresses all the risks of the Contractors/Subcontractors. Prior to the commencement of work under the contract, it is the responsibility of all Contractors/Subcontractors to ensure that the OCIP coverages provided sufficiently address their insurance needs. Any additional insurance coverage purchased will be at Contractor's/Subcontractor's option and sole expense.

1.7 REQUIRED CONTRACTOR/SUBCONTRACTOR PROVIDED INSURANCE COVERAGES

For any work under this contract, and until completion and final acceptance of the work by the Owner, the Contractors/Subcontractors shall, at their own expense, promptly furnish Certificates of Insurance evidencing that coverage is in force and any required Additional Insured Endorsements to the Owner, with a copy to the Program Administrator for the following coverages, before commencing work on the Project.

A. **Automobile Liability Insurance Requirements and Limits:** See Section 1.8 for Certificate Holder and Additional Insured Endorsement specifications. Automobile Liability Insurance must cover all vehicles owned by, hired by, or used on behalf of the Contractors/Subcontractors for both Project Site and off-site operations with the following minimum limits of liability:

All Contractors/Subcontractors*

General/Prime Contractor	Subcontractor	
$2,000,000	$1,000,000	Bodily Injury and Property Damage Liability

***See Section1.8 for additional insured language**

B. **Workers' Compensation and Employer's Liability Insurance Limits:**

Workers' Compensation –Statutory Benefits - All States
Employer's Liability:
$1,000,000 Bodily Injury each Accident
$1,000,000 Bodily Injury by Disease – Policy Limit
$1,000,000 Bodily Injury by Disease – Each Employee

C. General Liability Insurance, minimum limits of liability are as follows:

Eligible Contractors/Subcontractors

General/Prime Contractor	Subcontractor	
$2,000,000	$1,000,000	Bodily Injury and Property Damage Liability Per Occurrence
$2,000,000	$1,000,000	General Aggregate
$2,000,000	$1,000,000	Products/Completed Operations Aggregate
$2,000,000	$1,000,000	Personal/Advertising Injury Liability Per Person or Organization

Ineligible Contractors / Subcontractors (Excluded)

General/Prime Contractor	Subcontractor	
$2,000,000	$1,000,000	Bodily Injury and Property Damage Liability Per Occurrence
$2,000,000	$1,000,000	General Aggregate
$2,000,000	$1,000,000	Products/Completed Operations Aggregate
$2,000,000	$1,000,000	Personal/Advertising Injury Liability Per Person or Organization

D. Professional Liability Insurance: If Contractor's/Subcontractor's work requires design and/or design-assist services, or Contractor/Subcontractor performs professional services of any kind, Contractor/Subcontractor shall purchase and maintain, at its sole cost and expense, Professional Liability (Errors and Omissions) insurance for all professional services provided. This Professional Liability insurance shall include full prior acts coverage sufficient to cover the services under this agreement, with the following minimum limits of liability:

$1,000,000 per Claim/Annual Aggregate

Deductible or self-insured retention amount must not be greater than $100,000 per claim, including coverage of contractual liability.

Professional Liability Insurance is to be maintained during the term of the contract and for so long as the insurance is reasonably available as provided herein, for a period of ten (10) years after completion of the services.

E. Environmental and Asbestos Abatement Coverages: If the Contractor's/Subcontractor's scope of work involves the removal of asbestos, the removal/replacement of underground tanks, or the removal of toxic chemicals and substances, the Contractor/Subcontractor will be required to provide the following minimum limits of liability, for such exposures subject to requirements and approval of the Owner:

$1,000,000 per Claim/Aggregate

Aircraft or Watercraft Liability Insurance: If any Contractor/Subcontractor requires the use of Aircraft or Watercraft at the Project Site, including without limitation aircraft insurance required in connection with use of drones, the Contractor/Subcontractor shall purchase and maintain, or cause the operator of the Aircraft or Watercraft to purchase and maintain, Aircraft or Watercraft liability insurance. This must insure passengers and the General Public against personal injury, bodily injury or property damage arising out of the ownership, maintenance, use or entrustment to others. It includes Aircraft or Watercraft owned or operated by or rented or loaned to any insured. Use includes operation and "loading or unloading." **Use of drones or other aircraft or watercraft without the required insurance shall**

be a material breach of the Contract. Contractor/Subcontractor will be required to provide the following minimum limits of liability, for such exposures subject to requirements and approval of the District:

$5,000,000 per Claim/Aggregate

1.8 REQUIRED CONTRACTOR/SUBCONTRACTOR CERTIFICATES OF INSURANCE AND ADDITIONAL INSURED ENDORSEMENTS

Certificates of Insurance and Additional Insured Endorsements acceptable to the Owner and Program Administrator must be filed with the Owner within ten (10) days after award of the contract to all Contractors/Subcontractors and prior to commencement of on-site activities.

All required insurance shall be maintained, without interruption, from the date of commencement of on-site activities, until the date of the final payment or expiration of any extended period, as set forth in this agreement. These certificates and additional insured endorsements required by Section 1.7 and 1.8 shall provide not less than thirty (30) days prior written notice to the Owner, with a copy to the Program Administrator, of any material change in the insurance, cancellation, or non-renewal.

Certificates of Insurance: The Project must be identified on the Certificate of Insurance in the "Description of Operations/Locations/Vehicles/Special Items" section. The Certificates of Insurance should name District, as the Certificate Holder, as specified below:

Certificate Holder:

Liberty Union High School District
c/o Statewide Educational Wrap Up Program (SEWUP)
2355 Crenshaw Blvd., Suite 200
Torrance, CA 90501

Additional Insured Endorsements: The Owner must be specifically named on the Schedule of an Additional Insured Endorsement, under the section titled, "Name of Person or Organization", as specified below:

1. **The District, CM, Architect, Inspector, the State of California, their officers, employees, agents, volunteers, and independent contractors as additional insureds.**
2. All Contractors/Subcontractors must provide an additional insured endorsement for automobile liability.

   Ineligible Contractors/Subcontractors must provide an additional insured endorsement on both the Automobile Liability and General Liability policies and a waiver of subrogation on workers' compensation policies.

   Liberty Union High School District
   c/o Statewide Educational Wrap Up Program (SEWUP)
   2355 Crenshaw Blvd., Suite 200
   Torrance, CA 90501

1.9 CONTRACTOR/SUBCONTRACTOR INSURANCE FOR PERSONAL PROPERTY AND EQUIPMENT

All Contractors/Subcontractors shall be solely responsible for any loss or damage to their personal property including, without limitation, their tools and equipment, mobile construction equipment, scaffolding, and temporary structures, whether owned, borrowed, used, leased, or rented by any Contractor/Subcontractor. Contractors/Subcontractors may at their sole discretion, purchase and maintain insurance or self-insure such equipment and property, and any deductible in relation thereto shall be their sole responsibility. Any insurance,

including self-insurance, shall be the Contractors'/Subcontractors' sole source of recovery in the event of a loss.

Any type of insurance or any increase of limits of liability not described in this Section, which the Contractors/Subcontractors require for their own protection or on account of any statute, will be their own responsibility and at their expense.

1.10 ASSIGNMENT OF RETURN PREMIUMS

The Owner will be responsible for the payment of all premiums associated solely with the OCIP and will be the sole recipient of any dividend(s) and/or return premium(s) generated by the OCIP.

1.11 WAIVER OF SUBROGATION AND OWNER INDEMNIFICATION

With respect to their work on the Project:

1. Owner waives all rights of subrogation and recovery against the Contractors/Subcontractors for any loss or damage which is insured under the OCIP.
2. Contractors/Subcontractors waive all rights of subrogation and recovery against the Owner and other Contractors/Subcontractors for any loss or damage which is insured under the OCIP.
3. The Contractors/Subcontractors are obligated to obtain insurance required herein to insure against risks not covered by the OCIP. It is Contractor's responsibility to ensure that it and its Subcontractors have obtained required insurance. Failure of Entity or any Subcontractor to obtain required insurance shall not invalidate or negate any obligation to indemnify the District for damages or claims not covered by the OCIP.

1.12 NO RELEASE

The provision of the OCIP by the Owner will in no way be interpreted as relieving the Contractors/Subcontractors of any other responsibility or liability under this agreement or any applicable law, statute, regulation, or order.

1.13 OWNER'S RIGHT TO AUDIT

The Contractor/Subcontractor will permit the Owner and/or its representative to examine and/or audit its books, records, and insurance policy information. Contractor/Subcontractor will also provide any additional information to the Owner, or its appointed representatives, as may be required.

1.14 DUTIES IN THE EVENT OF A LOSS

Contractors/Subcontractors are required to report all losses and potential losses promptly to OCIP insurers and/or Program Administrator. A full description and details of the incurred loss are also required.

The Contractor/Subcontractor shall assist the Owner, its agents, and the Program Administrator, by providing the utmost cooperation in the adjustment of claims arising out of the operations conducted under, or in connection with, the Project and shall cooperate with the Owner's insurers in claims and demands that arise out of the Project and that the insurers are called upon to adjust.

In the event of an accident, it shall be the responsibility of the employer and/or responsible Contractor/Subcontractor to see that injured workers or members of the public are provided immediate medical treatment. All appropriate medical and claim forms must be filed in accordance with the claim procedures developed for this Project by Keenan & Associates, hereinafter called "Program Administrator." This includes notification to the appropriate state authorities, if necessary.

1.15 OCCUPATIONAL SAFETY AND HEALTH COMPLIANCE

All Contractors/Subcontractors are expected to comply with all applicable local, state, and federal occupational safety and health requirements. If additional safety and health requirements are set forth in the contract specifications, all contractors shall comply with these requirements.

It is the responsibility of each Contractor/Subcontractor to maintain an environment free of recognized hazards. All Contractors/Subcontractors shall exercise reasonable care to prevent work-related injuries; property and equipment damage at the Project, as well as minimize risk to the public and third-party property.

The Program Administrator shall conduct periodic loss control surveys on behalf of the District. These surveys will focus on evaluating the Contractors'/Subcontractors' efforts to minimize loss, assist in identifying loss exposures, and to recommend appropriate corrective measures. The Program Administrator is a resource to supplement the safety and loss prevention activity of Contractors/Subcontractors. Its loss control survey activities or other activities of the Program Administrator and/or OCIP insurers do not in any way relieve the Contractors/Subcontractors of their responsibilities for Project safety.

1.16 PROJECT SAFETY PROGRAM

In addition, local, state, and federal occupational safety and health laws, the following standards apply to all Enrolled and Non-Enrolled Contractors/Subcontractors.

A. Safety Orientation

1. Contractor/Subcontractor employees shall be provided with a project specific safety orientation prior the start of the project. At a minimum, the orientation will address the following items:
    a. The District's site safety requirements.
    b. Site specific safety hazards and protective measures for these hazards.
    c. Emergency telephone numbers and procedures.
    d. Local medical clinic/hospital information within the Medical Provider Network (MPN).

B. Program Management

1. Each Contractor/Subcontractors shall have the following safety programs:
    a. Injury and Illness Prevention Plans
    b. Hazard Communication Programs
    c. Heat Illness Prevention Plans

2. Each Contractor/Subcontractor shall have an onsite competent person responsible for occupational safety and health. A competent person is one who is capable of identifying existing and predictable hazards in the surroundings or working conditions which are unsanitary, hazardous, or dangerous to employees, and who has authorization to take prompt corrective measures to eliminate them.

C. Mandatory 6' Fall Protection

1. Contractor/Subcontractor employees shall be protected from fall exposures of 6 feet or greater. Activities include but are not limited to:
    a. Steel erection
    b. Roofing
    c. Framing
    d. Decking
    e. Work performed from scaffolds
    f. Work performed from ladders

    Exceptions: The following exceptions apply only to framers and wood frame activities:

    a. When installing or "rolling" the joists, Cal/OSHA fall protection requirements shall govern.

    b. When framers are walking/working on securely braced joists, rafters, or roof trusses on center spacing not exceeding 24 inches, and more than 6' from an unprotected side or edge, they shall be considered protected from falls between the joists, rafters, or roof trusses.

2. A safety monitor as means of fall protection is prohibited.
3. Ladder jacks and lean-to scaffolds are prohibited.
4. Contractor/Subcontractors are required to provide training to their employees who might be exposed to a fall hazard prior to the exposure or upon hiring. This training shall be documented and available for review.
5. Methods of fall protection include but are not limited to the following:
   a. Railings
   b. Covers for Floor, Roof, and Wall Openings
   c. Personal Fall Arrest Systems, Personal Fall Restraint Systems, and Positioning Devices
   d. Controlled Access Zones
6. The design and construction of railings shall conform to the Cal/OSHA Construction Safety Orders.
7. The use of wire ropes as top rails and intermediate rails of guardrail systems used for perimeter protection, or at interior openings such as stairways and elevator shafts, shall be installed in accordance with Cal/OSHA requirements. Additionally, wire ropes shall be secured to each support and taut at all times. The maximum deflection of the top rail when a load of 200 pounds is applied in any direction at any point of the top rail shall not exceed 3 inches in one direction which includes the free hanging sag in the wire rope.
8. The minimum parapet height allowed for fall protection is 42 inches or greater.
9. Covers used to cover floor, roof, and wall openings shall be secured in place to prevent accidental removal or displacement and shall be marked in accordance with Cal/OSHA Construction Safety Orders.
10. Covers used to cover floor and roof openings shall be capable of safely supporting the greater of 400 pounds or twice the weight of the employees, equipment and materials that may be imposed on any one square foot area of the cover at any time.
11. Controlled access zones shall be defined by a control line or other means that restricts access. Each line shall have a minimum breaking strength of 200 pounds. Signs shall be posted to warn unauthorized employees to stay out of the controlled access zone.
12. Control lines shall consist of ropes, wires, tapes, or equivalent materials. Control lines shall be erected and supported in accordance with Cal/OSHA Construction Safety Orders.
13. Scaffold Access/Egress. An internal ladder system with hatches and drop-down ladders or temporary stairs shall be provided for safe access/egress on all scaffolds 20 feet or greater in height. External straight ladders are prohibited on all scaffolds if it exposes a user to a fall of 20 feet or greater in height.

    Exception: When adjustable scaffolds are utilized**, rest platforms shall not exceed 20' vertical intervals.**

D. Site Safety

According to industry practices, it is the responsibility of contractors of all tiers to exercise reasonable care to prevent work-related injuries; property and equipment damage at the project site, and to minimize risk to the third-party persons and property. Contractors/Subcontractors of all tiers shall be expected to comply with the following safety and loss control requirements:

1. All Subcontractors shall identify their contact person(s) to the General or Prime Contractor.
2. All Contractors/Subcontractors shall follow District procedures for dealing with the media.

3. At all times, hard hats shall be worn in the construction environment. Hard hats shall meet the requirements of ANSI Z89.1. No modification to the shell or suspension is allowed except when such changes are approved by the manufacturer.
4. 100% protective eyewear with side shield protection is required while in the construction environment, shop, or anytime eye hazards exist. Protective eyewear shall bear a legible and permanent "Z87" logo to indicate compliance with applicable ANSI/ASSE Standard.
5. All construction employees shall wear clothing suitable for the weather and work conditions. At a minimum, this shall be short sleeved shirts, long pants, and leather or other protective work shoes or boots.
6. Alcohol is prohibited on District property always.
7. Contractors/Subcontractors will be required to respond to all District complaints about objectionable levels of dust or noise and will be required to provide prompt and appropriate abatement.
8. Construction personnel cannot enter District grounds other than the construction site unless accompanied by District personnel and are allowed only "incidental" contact with students. Violations of these requirements by any construction employee will result in a mandatory background check of that employee – including fingerprinting – as required by state law.
9. All prime contractors must attend the site-specific pre-construction meeting.
10. No sexual reference or preference shall be permitted on any piece of clothing or the hardhat. Any employee observed disregarding this policy shall be removed from the job site until further notice.
11. Contractors and subcontractors at all times shall keep premises free from debris such as waste, rubbish, and excess materials and equipment caused by contract work. Contractors and subcontractors shall not leave debris under, in, or about the premises. Upon completion of the contract work, contractors and subcontractors shall clean the interior and exterior of the building or improvement including fixtures, equipment, walls, floors, ceilings, roofs, windowsills and ledges, horizontal projections, and any areas where debris has collected so surfaces are free from foreign material or discoloration. Contractors and subcontractors shall clean and polish all glass, plumbing fixtures, and finish hardware and similar finish surfaces and equipment and contractor shall also remove temporary fencing, barricades, planking and construction toilet and similar temporary facilities from the site. No glass containers are permitted on the site.
12. Theft or willful damage to any property of the Owner, student, or other contractors will be prosecuted fully.
13. All Contractors/Subcontractors will advise non-English speaking employees in their native language either in a written format or via an interpreter of these policies.

E. Crane Safety

1. In accordance with Title 8, California Code of Regulations, section 5006.1, employers shall only permit operators who have a valid certificate (license) of competency to operate cranes. The operator shall have his license on his person, readily available for review.
2. All cranes used in lifting service, exceeding 3 tons rated capacity, and their accessory gear shall not be used until the employer has ascertained that such equipment has been certificated in accordance with Cal/OSHA as evidenced by current and valid documents. Certificates (annual and quadrennial) attesting to current compliance with testing and examination standards shall be maintained, readily available for each crane.

F. Fire Prevention During Welding, Cutting, and Other Hot Work

1. Contractors engaged in welding and allied processes, heat treating, grinding, cutting, thawing pipe, powder-driven fasteners, hot riveting, torch-applied roofing in conjunction with the requirements of NFPA 241, and similar applications producing or using a spark, flame, or heat shall adhere to National Fire Protection Association Standard 51B entitled "Standard for Fire Prevention During Welding, Cutting, and Other Hot Work."

G. Incident Investigation Requirements

1. The contractor shall perform thorough, in-depth investigations and evaluations of all incidents. A formal incident investigation shall be conducted whenever any incident occurs, including, without limitation, both non-injury incidents and incidents involving first aid. Additionally, near miss accidents and/or incidents must be reported and undergo the same in-depth investigation, root cause analysis and lessons learned process. The incident investigation report shall be e-mailed to Keenan and Associates within 5 working days.
2. Recommendations and lessons learned to prevent recurrence of incidents shall be documented and communicated to all employees of contractor and subcontractors through safety meetings and on-the-job training.

H. Return to Work:

1. The District and OCIP Carrier are committed to working with all Enrolled Contractors and Subcontractors to promote the successful & timely return to work of injured employees following a work-related injury. The purpose of this policy is to ensure that Enrolled Contractor/Subcontractor employees who temporarily cannot return to their normal duties due to job-related injury or illness but can safely perform transitional duties while recovering is offered appropriate transitional duties for a limited time only.
    a. An employee who has experienced a job-related injury requiring medical treatment must provide a proper medical release prior to returning to work.
    b. An employee who has been removed from the jobsite ambulatory must provide a proper medical release prior to returning to work.
    c. Each Enrolled Contractor/Subcontractor will cooperate with the OCIP Carrier to facilitate the return to work of any injured employee capable of safely performing transitional duties.
    d. When the employee is released to transitional duties, it is the Enrolled Contractor/Subcontractor's responsibility to facilitate the injured employee's return to work.
    e. The Enrolled Contractor/Subcontractor is expected to accommodate the injured employee and facilitate the return to work.
    f. It will be the responsibility of the insurance carrier to maintain communication with the treating physician and the Enrolled Contractor/Subcontractor to facilitate the prompt return of an employee to full work status.

I. Conflicting Safety Requirements:

Contractors and subcontractors shall adhere to all applicable federal, state, local, and contractual safety and health requirements. If there is a conflict between any of these safety and health requirements, the most stringent requirement shall apply.

J. Noncompliance and Unsafe Practices

Owner or their representative shall have the authority to immediately cease any and all operation (s) on the jobsite that is deemed by Owner or their representative to be unsafe to property or has the potential to cause Bodily Injury, pursuant to Title VIII California Code of Regulation, Section 1511. Any such cession of work shall not constitute recoverable delay or other contractual

remedies for liquidated damages and may expose the offending contractor to any such losses to the District or other trades.

K. Professional Conduct Clause

Contractors and subcontractors shall at all times adhere to safety requirements (contractual and regulatory) and shall encourage safe and professional behavior among their employees. Contractor and subcontractors shall not allow on the job site any unfit person, unsafe person, anyone unskilled and unqualified to perform the work assigned to them, or anyone exhibiting such qualities. Any person in the employ of the contractor or subcontractor whom the District or the District's agent/representative may deem incompetent, unsafe, or unfit shall be immediately dismissed from the OCIP job site and shall not again be allowed on the OCIP the job site except with the written consent of District or the District's agent/representative. The District reserves the right to request that the contractor or subcontractor's assigned Project Supervisor/Manager be replaced immediately.

1.17 OWNER'S INSURANCE OBLIGATIONS; CONTRACTORS'/SUBCONTRACTORS' OBLIGATIONS; REPRESENTATIONS, WARRANTIES AND DISCLAIMERS

(a) Owner assumes no obligation to provide insurance other than that summarily described in these Contractual Provisions, in the Project Insurance Manual, and in the OCIP insurance policies. Contractor/Subcontractor shall review the OCIP coverages, limits of liability, and insurance policies to satisfy themselves that the coverages offered thereby meet its needs. Nothing contained herein shall be deemed to place any responsibility on Owner, and Owner disclaims any responsibility, for ensuring that the insurance provided by the OCIP is sufficient for the conduct of Contractor's/Subcontractor's business or performance of the Work, including, without limitation, the adequacy of the limits of liability provided by, and as to all other terms, conditions, and exclusions of, the OCIP insurance policies. The furnishing of insurance by Owner through the OCIP shall in no way relieve or limit or be construed to relieve or limit Contractor/Subcontractor of any responsibility, liability or obligation imposed by the contract, the contract documents, the Project Insurance Manual, the OCIP insurance policies, or by law, including, without limitation, all indemnification obligations on the part of Contractor/Subcontractor.

(b) By enrolling in the OCIP, Contractor/Subcontractor acknowledge that (i) the limits of liability of the OCIP insurance policies are shared by all insured parties under the OCIP; (ii) Owner is not an insurer or in the business of insurance and is not an agent, broker, partner or guarantor of Contractor/Subcontractor or any of the insurance companies providing coverage under the OCIP (the "OCIP insurers"); and (iii) Owner is not responsible for (a) the availability, adequacy, or exhaustion of the limits of the OCIP, (b) the present or future solvency of any of the OCIP insurers or (c) any claims or disputes by, between or among Owner, Contractor/Subcontractor and any of the OCIP insurers, including, without limitation, claims or disputes arising out of any the OCIP insurers' payment or nonpayment of claims or losses, or such insurers' contractual or extra-contractual duties, including, without limitation, defense and/or indemnity obligations. Any type of insurance coverage or limits of liability not provided by the OCIP which Contractor/Subcontractor desires for its own protection, or which is required by applicable laws or regulations, shall be its sole responsibility and expense and shall not be included in its compensation for performance of the contract work. If Contractor/Subcontractor believes that additional limits of liability beyond those provided by the OCIP would be prudent for its protection, it agrees to investigate and procure such additional limits of liability for itself at its sole cost.

(c) By enrolling in the OCIP, Contractor/Subcontractor represents and warrants that it has had the opportunity to read and analyze (and to obtain professional assistance to read and analyze) a copy of the OCIP insurance policies and understand the contents thereof. Any reference in these contractual provisions, in the Project Insurance Manual, or elsewhere in any contract document as to amount, nature, type or extent of coverage provided under the OCIP and/or potential applicability to any potential claim or loss is for reference

only and Contractor/Subcontractor represents and warrants that it has not relied upon any such reference or any other oral or written statement by or on behalf of Owner, the Project Administrator, or any of its or their agents, employees or representatives, but solely upon its own independent review and analysis of the OCIP insurance policies in formulating any understanding and/or belief as to amount, nature, type or extent of any coverage, conditions, extensions, or limits of liability provided by and as to all other terms of the OCIP insurance policies and/or their potential applicability to any claim or loss or their sufficiency for the conduct of Contractor's/Subcontractor's business or performance under the contract documents. To the extent that Contractor/Subcontractor deems it prudent to secure and maintain additional, supplemental, excess, or wholly independent insurance or liability associated with its work on the Project or otherwise, it shall be responsible to do so at its sole expense.

(d) Contractor/Subcontractor hereby releases Owner, the Program Administrator and their respective representatives, agents, directors, officers, employees, partners, shareholders, members, affiliates of every tier, successors, and assigns from any and all claims and liabilities arising out of or relating to acts, errors, omissions or negligence (i) in the design, selection, placement, adequacy, amount, limits, scope and nature of insurance coverage afforded by the OCIP, (ii) in the selection, performance and present and future solvency of the OCIP insurers, and (iii) in the implementation and administration of the OCIP. Contractor/Subcontractor shall make its own determinations regarding such matters and expressly waives all rights and benefits conferred upon it by the provisions of California Civil Code Section 1542, which provides:

"**A general release does not extend to claims that the creditor or releasing party does not know or suspect to exist in his or her favor at the time of executing the release and that, if known by him or her, would have materially affected his or her settlement with the debtor or released party."**

Contractor/Subcontractor expressly acknowledges that the foregoing waiver of the provisions of Section 1542 was separately bargained for, and expressly agrees that the release provision shall be given full force and effect, including, without limitation, as to unknown or unsuspected claims, demands, liabilities and causes of action, if any may exist or arise. This release provision shall survive the completion of the contract work and the expiration or other termination of the Agreement.

1.18 JOINT DEFENSE OF CLAIMS AND SUITS AGAINST MORE THAN ONE INSURED

(a) If a claim, demand, suit, or other proceeding ("Claim") is brought against more than one insured under the OCIP, Owner and Contractor/Subcontractor recognize the common interest of all OCIP insureds in jointly defending that Claim. To the fullest extent permitted by law, and absent a material, current, actual, conflict of interest that cannot be waived and which mandates the appointment of separate counsel under applicable law, Owner and Contractor/Subcontractor insured under the OCIP (i) shall be defended by the same counsel and by the same consultants and experts selected by Owner and/or the OCIP insurers at its or their sole discretion, regardless of whether the defense under the OCIP is provided subject to a reservation of rights issued by any OCIP insurer, and (ii) waive their respective rights to independent counsel as to any and all such Claims. This waiver is deemed to be continuing. Contractor/Subcontractor agrees to execute such other documents as are required to effectuate this waiver and fulfill the purpose of this Section 1.18.

(b) In defense of Claims arising under the OCIP, information shared with counsel engaged to defend the insureds ("Defense Counsel") will be protected from disclosure and shall remain privileged even after the termination of the OCIP and/or the completion of the Project. Contractor/Subcontractor agrees not to disclose to any person or entity, other than to Owner and to Defense Counsel, any confidential information obtained in the defense or pursuit of Claims covered, or potentially covered, under the OCIP. Any such confidential information shall only be used in matters that arise directly pursuant to such OCIP Claims. However, disclosures of such confidential information may be made (i) upon written approval from Defense Counsel or (ii) where required by court order or by applicable law.

(c) Nothing in this Section 1.18 shall preclude Contractor/Subcontractors from engaging counsel of its choice, at its sole expense, to associate in the defense of any such Claim.

1.19 Duty of Care

Nothing contained in the OCIP insurance policies, the contract, these contractual provisions, any other contract document, or the Project Insurance Manual shall relieve Contractor/Subcontractor of its obligations to exercise due care in the performance of its duties in connection with the contract work and to complete the contract work in strict compliance with the contract documents.

NOTE: THE OWNER AND PROGRAM ADMINISTRATOR MUST APPROVE CHANGES TO ANY OCIP REQUIREMENT OR PROCEDURE. NO CONTRACTOR OR SUBCONTRACTOR HAS THE AUTHORITY TO AMEND THE OCIP REQUIREMENTS.

OCIP EXHIBIT A

PROTECTIVE SAFEGUARDS

APPLICABLE TO 'WOOD FRAME' PROJECTS ONLY:

The Builders Risk Policy will not pay for LOSS caused by or resulting from exposures, if the applicable protective safeguards are not maintained during the Builders Risk Policy term of INSURED PROJECT.

As a condition precedent to fire, theft, vandalism, and malicious mischief coverage provided by the Builders Risk Policy, the following protective safeguards will be maintained at every INSURED PROJECT site of Wood Frame construction insured by the Builders Risk Policy.

1. **Fencing – The entire INSURED PROJECT** site shall be surrounded with a six foot chain link fence suitably anchored in the ground and placed a reasonable distance from the insured property. Gates through the chain link fence shall be securely locked during non-working hours.

2. **Lighting – The entire INSURED PROJECT** site shall be illuminated from sunset to sunrise, each day.

**Wood Frame Projects with total insured values greater than $15M may also be required to provide the following:

- Electronic Security – Electronic security by a contracted service from a surveillance company that owns and operates a UL-certified, North American based monitoring center. The surveillance system must be cloud-based and operational covering 100% of the INSURED PROJECT site utilizing infrared illumination or thermal imaging cameras. The electronic security system must have the following capabilities:

  - Live audible voice-over functionality;
  - Lighting or visual indication features;
  - Four hour back up battery life in the event AC power is lost.

EXHIBIT B: OCIP Project Insurance Manual

www.sewup.org

Statewide Educational Wrap Up Program (SEWUP) JPA

Owner Controlled Insurance Program (OCIP)

Project Insurance Manual

This manual is intended to provide only a general overview of the Owner Controlled Insurance Program and does not in any way alter or take precedence over the language in the actual insurance policies and contracts. It makes no promise to provide insurance to those not enrolled in the Owner Controlled Insurance Program

Program Administrator:
Keenan & Associates
SEWUP Department

Keenan & Associates | CA License No. 0451271 | www.keenan.com

Keenan

XI (v.03-2026)

SEWUP EDUCATION CONSTRUCTION INSURANCE

Table of Contents

PREFACE 3
This Manual 3
This Manual Does Not 3

1.0 INTRODUCTION 4
1.1 Participation & Contractor Compliance 4
1.2 Subcontractor Eligibility 5
1.3 Project Site and Offsite Premises 5

2.0 INFORMATION DIRECTORY 6
2.1 Program Administrator 6
2.2 Insurance Companies 6

3.0 OCIP COVERAGES 6
3.1 Workers' Compensation and Employer's Liability Insurance 7
3.2 Commercial General Liability & Excess Liability Insurance 7
3.3 Builder's Risk Insurance 8
3.4 Contractor's Pollution Liability Insurance 9
3.5 OCIP Certificates 9

4.0 CONTRACTOR REQUIRED INSURANCE 10
4.1 Verification of Required Insurance Coverages 10
4.2 Contractor Maintained Insurance Coverage 10
General/Prime Contractor 11
4.3 Certificates of Insurance 12
4.4 Additional Insured Endorsements 13

5.0 CONTRACTOR RESPONSIBILITIES / REQUIREMENTS 13
5.1 Contractor Bids & Change Orders - Removing Insurance Costs 14
5.2 Program Compliance 14
5.3 Confirmation of Enrollment & Evidence of OCIP Coverages 15
5.4 Payroll Reporting Compliance 15
5.5 Contract Completion / Closeout Compliance 16

6.0 SAFETY 16
6.1 Occupational Safety and Health Compliance 17

6.2 Safety Orientation 17
6.3 Program Management 17
6.4 Site Safety 17
6.5 Mandatory 6 Foot Fall Protection 18
6.6 Crane Safety 20
6.7 Fire Prevention During Welding, Cutting, and Other Hot Work 20
6.8 Incident Investigation Requirements 20
6.9 Return to Work 20
6.10 Conflicting Safety Requirements: 21
6.11 Noncompliance and Unsafe Practices 21
6.12 Professional Conduct Clause 21

7.0 CLAIMS REPORTING 21
7.1 Workers' Compensation Claim Reporting & Procedures 22
7.2 General Liability Claim Reporting 23
7.3 Builder's Risk Claim Reporting 23
7.4 Contractor's Pollution Liability Claim Reporting 23
7.5 Automobile Claim Reporting 24
7.6 Instructions and Procedures – Litigation Papers, Legal Documents, etc. 24
7.7 Investigation Assistance/Confirmation of Claim Receipt 24

8.0 REQUIRED PROJECT FORMS 24
8.1 First Report of Injury (5020) 25
8.2 Workers' Compensation Claim Form (DWC-1) 26
8.3 Notice of Occurrence - Accident/Incident Report – General Liability, Pollution, ... 29
Builder's Risk 29

9.0 FREQUENCY ASKED QUESTIONS (FAQS) 31
General 31
Workers' Compensation and Employers' Liability Insurance Questions 33
General Liability Insurance for Personal Injury, Bodily Injury and Property Damage Liability Questions 34

10.0 KNOWN POLICY EXCLUSIONS 35

Preface

This Manual

- Identifies responsibilities of the various parties involved in the project
- Provides a basic description of the OCIP coverage and program structure
- Describes audit and administrative procedures
- Provides answers to basic questions about the OCIP
- Provides claim reporting procedures
- Will be updated as necessary

This Manual Does Not

- Provide OCIP coverage interpretations
- Provide complete information about OCIP coverages (Refer to OCIP policies)
- Provide answers to specific claims questions

1.0 Introduction

The Statewide Educational Wrap Up Program JPA (SEWUP), of which this school district is a member, is providing an Owner Controlled Insurance Program (OCIP) for work performed at specific project sites, on behalf of the district, (herein referenced as the "District" or the "Owner"). The OCIP is an insurance program that insures eligible and enrolled subcontractors, for work performed at the Job Site (at times referenced herein as the "Work"). **Keenan & Associates**, hereinafter called "Program Administrator", will administer the OCIP on behalf of the SEWUP JPA.

Certain subcontractors are excluded from this OCIP. These parties are identified in the Contract Documents and Section 3 (Definitions) of this manual.

The Owner / District will pay the insurance premiums for the OCIP coverage described in this manual. You should notify your insurer(s) to endorse your coverage to be excess and contingent over the insurance provided under this OCIP for on-site activities and the related costs. Each bidding prime or general contractor ("Contractor") and subcontractors of every tier ("Subcontractor") is required to exclude from its bid price and requests for payment the cost of insurance coverages that will be provided by the OCIP.

Note
The guidelines in this manual are to be used for informational purposes only. This manual does not constitute a contractual agreement. If conflicts exist between this manual and OCIP Insurance Policies, or this manual and the Contracts between the District, Construction Manager, and Contractor (Enrolled Parties), the OCIP Policies or Owner's Contracts will govern.

1.1 Participation & Contractor Compliance

Participation in the OCIP is mandatory but not automatic. Enrollment eligibility will be determined upon completion of an online enrollment form which will include documentation of trade, scope of work, estimated value, estimated start and completion. All Contractors and Subcontractors of all tiers must register via the OCIP's online portal ("WrapPortal") (www.keenanwrap.com) and adhere to all program requirements, as specified in Section 5.0.

The program Administrator will provide a User Name, Password and URL for website enrollment to each subcontractor upon entry of Subcontractor identifying information into WrapPortal by its Contractor or Parent Subcontractor.

Enrollment of each Contractor's eligible Subcontractors is mandatory. Contractor shall notify Owner and the Program Administrator in writing of the identity of each Subcontractor regardless of enrollment eligibility and shall cause each Subcontractor to notify the Program Administrator in writing of the identity of each of its Sub-subcontractors, prior to such parties' commencement of their portion of the Work and prior to their entry onto the Project. Contractors and subcontractors of all tiers shall not be deemed enrolled until the Program Administrator and OCIP insurers receive and approve a completed Contract Enrollment Form, for each awarded contract. Enrollment is required prior to commencement of on-site activities but no contractor shall be enrolled sooner than 30 days prior to their start date. Each Contractor/Subcontractor shall be solely responsible for any and all losses, damages, claims, liabilities, and suits arising out of such Subcontractor's failure to enroll, or delay in enrolling, any of its Subcontractors.

Enrollment (Definition): Required application and documents to be submitted by Contractors/Subcontractors of all tiers for review by the OCIP Program Administrator for submission to the insurer.

Enrolled Contractor (Definition): All Eligible Contractors/Subcontractors of all tiers are considered Enrolled once required application and documents are received, reviewed, and processed by the OCIP Program Administrator and submitted to the insurer.

1.2 Subcontractor Eligibility

A. Eligible

Includes all Contractors and Subcontractors providing direct labor on the Project and excludes Ineligible contractors as defined below. Temporary labor services and leasing companies are to be treated as Eligible Contractors.

B. Ineligible Contractor (Excluded)

It is not the intent to insure certain entities and scopes of work, including, but not necessarily limited to the following: consultants; suppliers; abatement and/or removal of hazardous materials; vendors; off-site fabricators; materials dealers; surveyors; guard services; non-construction janitorial services; and truckers, including trucking to the Project where delivery is the only scope of work performed; and contractors performing landscape maintenance (though landscape work itself is covered). Ineligible parties are required to ensure that any eligible subcontractors who provide on-site labor comply with the OCIP Enrollment and are provided with a copy of this OCIP Manual. Program Administrator reserves the right to reconsider an ineligible entity's participation in the OCIP should its scope of work or contract change at any time. Ineligible contractors will be required to adhere to insurance certificate requirements as stated in section 4.0, under Contractor-Provided Insurance Coverage. In addition, any party deemed an Ineligible Contractor, but who has direct labor on the Project, will be required to participate in the Project Safety Program (see Section 6.0).

Any questions regarding a Subcontractor's status as "Eligible" or "Ineligible" should be referred by written request to Contractor and Owner and approved by the Program Administrator.

1.3 Project Site and Offsite Premises

Coverages provided by the OCIP are Project Site specific. The Project-Site must be designated by the Owner. The Project Site consists of any and all projects that are endorsed to this policy, which includes the:

1. Ways and means adjoining the endorsed project site.
2. Adjacent locations to the endorsed projects sites where incidental operations are being performed, excluding permanent locations.

With the exception of 1 and 2 mentioned above, off-site locations, labor and operations are not covered by the OCIP. It will be the responsibility of each contractor to maintain off-site insurance, as identified in Section 4.3, which specifies coverage types and minimum limits. Contractor will promptly furnish to the Owner, or their designated representative, Certificates of Insurance evidencing that all required insurance is in force.

2.0 Information Directory

2.1 Program Administrator

Keenan & Associates – SEWUP Department
2355 Crenshaw Blvd., Suite 200
Torrance, CA 90501
Phone: 800.654.8102

Questions Regarding OCIP
Refer questions concerning the OCIP and its administration or coverages to the Program Administrator. Answers to questions may also be found in Section 9.0 - Frequency Asked Questions.

2.2 Insurance Companies

Workers' Compensation	Liberty Mutual Insurance
General Liability	Certain Underwriters at Lloyd's of London
Excess Liability	Certain Underwriters at Lloyd's of London
	Endurance American Specialty Insurance Company
	Crum & Forester Specialty Insurance Company
	Texas Insurance Company
	Fair American Select Insurance Company
	Great American Assurance Company
	Starr Surplus Lines Insurance Company
	Westchester Surplus Lines Insurance Company
	Navigators Specialty Insurance Company
	Fortegra Specialty Insurance Company
Builder's Risk	Illinois Union Insurance Company
Contractor's Pollution Liability	Berkley Assurance Company

See Section 6 For Claims Reporting Instructions and Procedures.

3.0 OCIP Coverages

Description of Owner Controlled Insurance Program (OCIP) Coverages

The OCIP is for the benefit of the Owner and all Enrolled Contractor/Subcontractors who have on-site employees. OCIP coverage applies only to Work performed under the contract at the Project Site specified by the Owner. All Contractors must provide their own insurance for Automobile Liability and off-site locations, labor, and operations. The following coverages are provided by the OCIP:

Workers' Compensation and Employers Liability

Commercial General & Excess Liability

Builder's Risk

Contractor's Pollution Liability

A Certificate of Insurance evidencing workers' compensation & employer's liability, general and excess liability and pollution liability insurance will be issued to each contractor that is enrolled for

coverage in the OCIP ("Enrolled Party") via WrapPortal. Other documentation including forms, posting notices, etc., will be provided to each Enrolled Party.

OCIP Disclaimer
The OCIP is intended to provide broad coverages and high limits, to all Enrolled Contractors/Subcontractors. The Owner does not warrant or represent that the OCIP coverages constitute an insurance program that completely addresses the risks of the Contractors/Subcontractors. Prior to contract award, it is the responsibility of all Contractors/Subcontractors to ensure that the OCIP coverages provided sufficiently address their insurance needs. Upon request, OCIP policies are available for review.

3.1 Workers' Compensation and Employer's Liability Insurance

Workers' Compensation and Employer's Liability Insurance will be provided in accordance with applicable state laws to all Enrolled Contractors/Subcontractors (each as a named insured, and issued an individual policy) reflecting the following Limits of Liability:

Coverage A – Workers' Compensation

Liability imposed by the Workers' Compensation and/or Occupational Disease statute of the State of California or governmental authority having jurisdiction related to the work performed on the Project.

Coverage B – Employers Liability

$1,000,000 Bodily Injury each Accident
$1,000,000 Bodily Injury by Disease – Policy Limit
$1,000,000 Bodily Injury by Disease – Each Employee

Contractor Deductible: None

Exclusions: The known exclusions for this coverage are listed in Section 10.0 – Known Policy Exclusions. This is a summary and may not be exhaustive. The policy language may contain additional exclusionary language, limitations or carve-backs that may not be identified in the list. It is the responsibility of the Contractor/Subcontractor to review the policy for the complete details of all exclusions.

Policy Term: The master policy effective date is October 1, 2025. The policy term is three years, with one automatic two-year renewal. The policy is intended to remain in effect for the length of the construction of the Project or through October 1, 2030 at 12:01am, whichever comes first. Warranty work and post contract repair work is excluded. Contractor and each Subcontractor is insured under the policy for the length of its work at the Project, or the policy end date, whichever comes first.

3.2 Commercial General Liability & Excess Liability Insurance

All Enrolled Contractors/Subcontractors are considered Named Insureds under SEWUP's Master General & Excess Liability policies. The Master Policies are available for review by Contractors/Subcontractors, upon request to the Owner or the Program Administrator.

Primary Coverage: Total Limits for Bodily Injury and Property Damage

$125,000,000 Each Occurrence
$195,000,000 General Liability Aggregate
$125,000,000 Products / Completed Operations Aggregate Limit

- Ten (10) year Products and Completed Operations Extension after project completion with a single non-reinstated aggregate limit.

Policy Forms: "Occurrence" Form
Contractor Deductible: None

Conditional Warranty:

Subsidence: It is expressly warranted that the Named Insured and all Contractors and Sub-Contractors comply with all recommendations contained in the geotechnical/ environmental reports. Failure to comply will result in subsidence coverage being null and void and a full subsidence exclusion would be re-instated.

EIFS Installation Agreement

The following terms and conditions shall be satisfied in connection with all EIFS work on any Project:

1. EIFS work is to be specifically identified and its value declared.
2. All EIFS work will be monitored by an independent EIFS inspection company to document compliance with manufacturers' handling and installation instructions.
3. EIFS product manufacturers and warranty providers will be identified and provided to the Owner.

Exclusions: This insurance does not provide coverage for products liability of any enrolled party for any product manufactured, assembled or otherwise worked upon away from the Project Site.

The known exclusions for this coverage are listed in Section 10.0 – Known Policy Exclusions. This list is a summary and may not be exhaustive. The policy language may contain additional exclusionary language, limitations or carve-backs that may not be identified in the list. It is the responsibility of the Contractor/Subcontractor to review the policy for the complete details of all exclusions.

Policy Term: The master policy effective date is October 1, 2025. The policy is intended to remain in effect for the length of the Project or through October 1, 2030 at 12:01am, whichever comes first.

3.3 Builder's Risk Insurance

The Builders Risk Master Policy names the Owner as named insured and enrolled Contractors/Subcontractors as additional insureds. This Master policy is available for review by Contractors/Subcontractors, upon request to the Owner or the Program Administrator.

Primary Coverage: Builders Risk coverage will be in place during the course of construction of the Project. Such insurance shall be written on a repair or replacement cost basis, subject to exclusions, sub limits, property limitations and conditions. The policy covers materials, supplies, equipment, fixtures, or machinery, which will become a permanent part of the building or structure at the Project site specified, limited to policy terms, limits, and exclusions.

Deductible: A deductible, which shall be determined by the type of construction, will apply to each occurrence. The deductible schedule is as follows:

New Construction & Renovation

- $5,000 - $50,000 deductible (depending on type of structure) for Wood Frame, Masonry Non-Combustible or Joisted Masonry, and Fire Resistive / Non-Combustible.
- Up to $100,000 deductible for Water Damage to All Construction Classifications.
- Deductibles are subject to increase if a Project's Builder's Risk term is extended 60 days or more

Contractor Deductible: Contractor/Subcontractors shall be responsible for the applicable deductible. The deductible shall apply to each occurrence and must be satisfied prior to payment of the loss. **The deductible shall not be reimbursed by the OCIP Insurance Program or the District.**

Exclusions: The known exclusions for this coverage are listed in Section 10.0 – Known Policy Exclusions. This is a summary and may not be exhaustive. The policy language may contain additional exclusionary language, limitations or carve-backs that may not be identified in the list. It is the responsibility of the Contractor/Subcontractor to review the policy for the complete details of all exclusions.

Policy Term: The policy term is the term of the project.

Note:
All Contractors'/Subcontractors shall be responsible for any loss or damage to their personal property. This would include, but is not limited to, tools, equipment, mobile construction equipment, or materials NOT intended to be a permanent part of the building, whether owned, borrowed, used, leased, or rented by any Contractor/Subcontractor. Any insurance purchased by the Contractors/Subcontractors, or self-insurance, shall be the Contractors'/Subcontractors' sole source of recovery in the event of a loss.

3.4 Contractor's Pollution Liability Insurance

Contractor's Pollution Liability is written under a master liability policy. This Master policy is available for review by Contractors/Subcontractors, upon request to the Owner or the Program Administrator. Certificates of Insurance will be provided to all enrolled Contractors/Subcontractors, as named insured.

Primary Coverage: Bodily Injury or Property Damage from a pollution event as defined within the policy form resulting from covered operations or completed operations.

Limits:	$15,000,000 Per Claim / $25,000,000 Policy Aggregate Defense costs up to $1,000,000 (outside the Limits of Liability)
Self Insured Retention:	$10,000 Each Claim

Contractor/Subcontractor shall be liable, at its expense; to the extent claims payable are attributable to their acts or omissions and/or the acts or omissions of its Subcontractors of any tier or any other entity or person for whom it may be responsible. The deductible amount shall not be reimbursed by the OCIP Insurance Program or the District.

Exclusions: The known exclusions for this coverage are listed in Section 10.0 – Known Policy Exclusions. This is a summary and may not be exhaustive. The policy language may contain additional exclusionary language, limitations or carve-backs that may not be identified in the list. It is the responsibility of the Contractor/Subcontractor to review the policy for the complete details of all exclusions.

Policy Term: The master policy effective date is October 1, 2025. The policy is intended to remain in effect for the length of the Project or through October 1, 2030, at 12:01am, whichever comes first.

3.5 OCIP Certificates

All Enrolled Contractors/Subcontractors will receive their own Workers' Compensation policy. Certificates of Insurance will be furnished for the General Liability, Excess Liability, Contractor's Pollution Liability, and Builder's Risk coverages. These policies are available for review by the Contractor/Subcontractor, upon request to the Owner or the Program Administrator. Such policies or programs may be amended from time to time and the terms of such policies or programs are incorporated herein by reference. Contractors/Subcontractors hereby agree to be bound by the terms of coverage, as contained in such insurance policies and/or self-insurance programs.

4.0 Contractor Required Insurance

For any work under this contract, and until completion and final acceptance of the work by the Owner, the Contractors/Subcontractors shall, at their own expense, promptly furnish required Certificates of Insurance and Additional Insured Endorsements acceptable to the Owner and Program Administrator. Copies should be provided to the Program Administrator via WrapPortal, for both Project Site and Off-Site operations, within ten (10) days after award of the contract to all Contractors/Subcontractors and prior to commencement of on-site activities.

All required insurance shall be maintained, without interruption, from the date of commencement of on-site activities, until the date of the final payment or expiration of any extended period. Certificates and additional insured endorsements shall provide not less than thirty (30) days prior written notice to the Program Administrator, of any material change in the insurance, cancellation or non- renewal.

The OCIP places contractors and subcontractors into one of two main categories: Enrolled Contractors or Ineligible (Excluded) Contractors.

4.1 Verification of Required Insurance Coverages

A. Enrolled Contractor/Subcontractors:

- **Certificates of Insurance** must be provided, evidencing Workers' Compensation & Employer's Liability, and General Liability, Excess/Umbrella Liability insurance for off-site activities, and Automobile Liability insurance for on and off-site activities as per the insurance specifications in the Contract.
- **Additional Insured Endorsements** for Auto Liability. These endorsements must name **the District** specifically as additional insured. If the insured's policy has a 'Blanket' Additional Insured Endorsement and cannot name any entity, provide a copy of the endorsement for our review.

B. Ineligible (Excluded) Contractors/Subcontractors:

- **Certificates of Insurance** must be provided, evidencing Workers' Compensation & Employer's Liability, General Liability, Excess/Umbrella Liability and Automobile Liability insurance for all activities including both on-site and off-site activities as per the insurance specifications in the Contract.
- **Additional Insured Endorsements** for General Liability and Auto Liability. These endorsements must name **the District** specifically as additional insured. If the insured's policy has a 'Blanket' Additional Insured Endorsement and cannot name any entity, provide a copy of the endorsement for our review.
- **Waiver of Subrogation** for Workers Compensation and General Liability in favor of the owner.

4.2 Contractor Maintained Insurance Coverage

***Indicates off-site required coverage / **Indicates off-site & on-site required coverage**

A. Workers' Compensation and Employer's Liability Insurance*

- Enrolled & Ineligible/Excluded Contractors
- Required limits on Certificate of insurance are as follows:

Subcontractors	
Part 1: Workers' Compensation	California Statutory Benefits
Part 2: Employer's Liability	
$1,000,000	Bodily Injury each Accident
$1,000,000	Bodily Injury by Disease – Policy Limit
$1,000,000	Bodily Injury by Disease – Each Employee

- Ineligible/Excluded Subcontractors must also provide **Waiver of Subrogation** for Workers' Compensation in favor of the owner.

B. General Liability Insurance*

- Enrolled & Ineligible/Excluded Subcontractors
- Minimum Required limits of insurance are as follows:

General/Prime Contractor	Subcontractor	
$2,000,000	$1,000,000	Bodily Injury and Property Damage Liability Per Occurrence
$2,000,000	$1,000,000	General Aggregate
$2,000,000	$1,000,000	Products/Completed Operations Aggregate
$2,000,000	$1,000,000	Personal/Adv. Injury Liability Any One Person or Organization

- It is recommended that the Designated Operations Covered by a Consolidated (Wrap-Up) Insurance Program (CG 21 31 05 09) endorsement be added to your primary general liability policy. This will ensure appropriate coverage for any off-site exposures associated with this OCIP project.

C. Automobile Liability Insurance**

- Enrolled & Ineligible/Excluded Subcontractors
- Must cover all vehicles owned by, hired by, or used on behalf of the Contractors/Subcontractors for both Project Site and off-site operations with the following minimum limits of liability:

General/Prime Contractor	Subcontractor	
$2,000,000	$1,000,000	Bodily Injury and Property Damage

D. Professional Liability Insurance**

- Enrolled & Ineligible/Excluded Subcontractors
- If Subcontractor's work requires design and/or design-assist services, or Subcontractor performs professional services of any kind, Subcontractor shall purchase and maintain, at

its sole cost and expense, Professional Liability (Errors and Omissions) insurance for all professional services provided.

- Subcontractor's policy shall include full prior acts coverage sufficient to cover the services under this agreement, with the following minimum limits of liability:
  $2,000,000 per Claim/Annual Aggregate
- Deductible or self-insured retention amount must not be greater than $100,000 per claim, including coverage of contractual liability.
- Coverage must be maintained during the term of the contract and for so long as the insurance is reasonably available as provided herein, for a period of ten (10) years after completion of the services.

E. Environmental and Asbestos Abatement Coverages**

- Ineligible Subcontractors
- If Subcontractor's scope of work involves the removal of asbestos, the removal/replacement of underground tanks, or the removal of toxic chemicals and substances, the Contractor/Subcontractor will be required to provide the following minimum limits of liability, for such exposures subject to requirements and approval of the Owner:

  $2,000,000 per Claim/Aggregate

F. Aircraft or Watercraft Liability Insurance**

- If any Subcontractor requires the use of Aircraft or Watercraft at the Project Site, the Subcontractor shall purchase and maintain or cause the operator of the Aircraft or Watercraft to purchase and maintain, Aircraft or Watercraft liability insurance.
- Must insure passengers and the General Public against personal injury, bodily injury or property damage arising out of the ownership, maintenance, use or entrustment to others.
- Includes Aircraft or Watercraft owned or operated by or rented or loaned to any insured.
- Use includes operation and "loading or unloading". Contractor/Subcontractor will be required to provide the following minimum limits of liability, for such exposures subject to requirements and approval of the Owner:

  $5,000,000 per Claim/Aggregate

  Please note, Drones are considered aircraft and coverage is expressly excluded from the OCIP policies.

4.3 Certificates of Insurance

The Project must be identified on the Certificate of Insurance in the "Description of Operations/Locations/Vehicles/Special Items" section. The Certificates of Insurance should name District, as the Certificate Holder, as specified below:

Certificate Holder:

{Insert District Name}
c/o Statewide Educational Wrap Up Program (SEWUP)
2355 Crenshaw Blvd., Suite 200
Torrance, CA 90501

4.4 Additional Insured Endorsements

The Owner must be specifically named on the Schedule of an Additional Insured Endorsement, under the section titled, "Name of Person or Organization", as specified below:

- **The District, CM, Architect, Inspector, the State of California, their officers, employees, agents, volunteers and independent contractors as additional insureds.**
- All Contractors must provide an additional insured endorsement for automobile liability.
- Ineligible/Excluded Contractors must provide an additional insured endorsement on both the Automobile Liability and General Liability policies and a waiver of subrogation on workers' compensation.

{Insert District Name}
c/o Statewide Educational Wrap Up Program (SEWUP)
2355 Crenshaw Blvd., Suite 200
Torrance, CA 90501

5.0 Contractor Responsibilities / Requirements

Throughout the course of the Project, Subcontractors will be responsible for reporting and maintaining certain records as outlined in this section.

All Subcontractors shall cooperate with, and require their tier Subcontractors to cooperate with, the Owner and the Program Administrator, regarding administration and operation of the OCIP. **Each Subcontractor must include this document with their bid specifications to any and all Subcontractors.**

Responsibilities of Subcontractors:

- Enrolling in the OCIP and assuring all eligible tier subcontractors promptly enroll in the OCIP, via WrapPortal, prior to the start of any work
- Complying with the provisions of the OCIP Manual and cooperating in the administration and operation of the OCIP
- Including OCIP Provisions in all subcontracts, as appropriate
- Identifying and removing from bid the cost of OCIP-provided insurance (by all eligible contractors / subcontractors)
- Providing each Subcontractor with a copy of the OCIP manual
- Providing timely evidence of insurance to the SEWUP Department via WrapPortal
- Notifying the SEWUP Department of all awarded subcontracts via WrapPortal
- Maintaining and reporting monthly payroll records (by all eligible subcontractors) via WrapPortal
- Complying with the OCIP Administrator's requests for information
- Complying with insurance, claim and safety procedures
- Notifying OCIP Administrator immediately of any insurance cancellation or non-renewal of Contractor required insurance
- Complying with the OCIP insurance policy requirements, including but not limited to, physical audit of payroll records by the insurance company or its representatives.

5.1 Contractor Bids & Change Orders - Removing Insurance Costs

The Owner / School District provides insurance for all eligible, Enrolled Contractors/Subcontractors for work performed at the project site(s). The Owner pay's the insurance premiums for the OCIP coverages described in this manual under section 3.0 OCIP Coverages.

A. Contractor Insurance Cost Identification

Contractor's base bid shall exclude all costs for insurance coverages provided under the OCIP. If insurance cost is not removed, the bidder may not qualify as the lowest responsive bidder. The Bidder declares under penalty of perjury under California law, that the base bid excludes any costs relating to any insurance coverages afforded under the OCIP and that each subcontractor to the Bidder has similarly excluded costs for any insurance coverage afforded under the OCIP.

B. Change Order Pricing

All Contractors/Subcontractors declare, under penalty of perjury under California law, that any change order issued to the contract is priced to exclude any costs relating to any insurance coverage afforded under the OCIP.

5.2 Program Compliance

A. Participation in the OCIP is mandatory but not automatic. An Eligible contractor is not enrolled until the Program Administrator receives and approves the following items:

- Completed Contract Enrollment, for each awarded contract, within ten (10) days of Contract Award and prior to commencement of on-site activities. Enrollments can be completed and submitted electronically visiting www.keenanwrap.com
- Certificates of Insurance, evidencing Insurance for Workers' Compensation & General Liability coverages for off-site locations, labor, and operations
- Certificate of Insurance, including an Additional Insured Endorsement, naming the Owner as an Additional Named Insured, for Automobile Liability for both Project Site and Off-Site operations
- Policy Declarations pages, including proof of rates from your current policies

B. All Contractors/Subcontractors of all tiers shall cooperate with, and require their Subcontractors to cooperate with, the Owner and the Program Administrator in regard to the administration and operation of the OCIP.

C. All Contractors/Subcontractors further acknowledge and agree to comply fully and promptly with such safety, loss control, and quality control rules, requirements, and directives as may from time to time be promulgated by Owner, the Program Administrator and/or the OCIP insurers or any of its or their respective consultants, agents, or representatives. Nothing in this document or any other contract document or in the Project Insurance Manual, shall be deemed to render Owner or any of its affiliates of any tier an employer of Contractor/Subcontractor or any of its Subcontractors or any of its or their personnel or employees. **Failure to comply will be considered non-performance under the contract.**

OCIP Enrollment completed through WrapPortal by the following deadline:

- Subcontractors (All Tiers): Within ten (10) days of Contract Award and prior to commencement of On-site activities

All questions regarding enrollment compliance should be directed to the assigned OCIP Administrator.

Any Subcontractor who enrolls in the OCIP after their start date will have to provide a No-Known-Loss Letter to the Program Administrator, along with enrollment documentation.

For any work under this contract, and until completion and final acceptance of the work by the Owner, the Subcontractors shall, at their own expense, promptly furnish Certificates of Insurance to the Program Administrator before commencing work on the Project Site. Automobile Liability Insurance must be maintained for both Project Site and off-site operations.

5.3 Confirmation of Enrollment & Evidence of OCIP Coverages

Upon review of completed enrollment, OCIP Administrator will acknowledge acceptance of the Eligible Subcontractor into the Owner's OCIP, by issuing the following to each Enrolled Party:

- Confirmation Letter
- OCIP Certificates of Insurance
- Claims Kit, including DWC1 and MPN Notices

These documents, as issued by the OCIP Administrator, will clearly identify the effective dates of the OCIP coverages for the Contract. A separate Workers' Compensation policy will be issued and sent to each Enrolled Party.

Should an Enrolled Party perform work on several contracts/projects, an Enrollment Form must be completed for each contract. The OCIP Administrator will issue confirmation letters and certificates of insurance to each Enrolled Party for each separate contract. However, only one individual Workers' Compensation policy (that will apply to all contracts/projects) will be issued to each Enrolled Party.

Note:
Verify that the Workers' Compensation effective date, listed on your OCIP Certificate of Insurance, reflect the same date as your start date.

5.4 Payroll Reporting Compliance

Project Site Monthly Payroll Report Requirements

- Project Site Monthly Payroll must be submitted to the Program Administrator by the 10th of each month via WrapPortal until the completion of the contract and in no event shall be later than the 15th of each month. Payroll shall be reported only for labor performed at the project jobsite.
- Monthly Payroll Reporting is to begin from the enrollment effective date until the completion of the contract or the policy end date.
- Should no work be performed on the Project Site during a given month, each Enrolled Party is required to submit a form stating that "Non-Performance."
- Payroll reporting must summarize the unburdened payroll by Workers' Compensation Class Code. Certified payroll is not a requirement of the OCIP and cannot be accepted.
- If Monthly Payroll Report is <u>not submitted</u> to Program Administrator on a monthly basis, the Construction Manager and/or Owner can withhold payment until the report is received.

- For those Enrolled Parties performing Work under multiple contracts, for each contract, a Monthly Payroll Report is required each month until contract is finalized.
- All reported project site monthly payroll reported from October through the end of September is submitted by Program Administrator to the OCIP Insurance Carrier for auditing.
- Subcontractor shall keep and maintain accurate and classified records of their payroll for operations at the Project Site.
- A carrier audit may be performed using the reported payroll and other supporting documents. Contractor / Subcontractor agrees to cooperate with the OCIP insurance carrier(s) or their third-party auditors by responding to and providing documents as requested in a timely manner.

Workers' Compensation Insurance Rating Bureau Requirements

- **Payroll Reporting for Each Workers' Compensation Policy Issued** – Once an Eligible Contractor/Subcontractor is enrolled into the OCIP, the Program Administrator will issue a separate Workers' Compensation Policy. All Enrolled Subcontractors will need to comply with the rules and regulations of the California Workers Compensation Insurance Rating Bureau (WCIRB). This requires each Enrolled Party to maintain payroll records for each Contract under the policy issued. Such records will allocate the payroll by Workers' Compensation classification(s) and exclude the excess or premium paid for overtime (i.e., only the straight-time rate will apply to overtime hours worked).
- **Insurance Company Payroll Audit -** Each Enrolled Party must properly classify payrolls, as these are reported to the rating bureau for calculation of future Experience Modifiers for the Enrolled Party's firm. All Enrolled Parties shall make available for inspection and copying their respective company books, vouchers, contracts, documents, and records, of any and all types, for physical inspection by the auditors of the OCIP insurance carrier(s) or Owner's representatives. Availability of records must be for a reasonable time during the policy period, any extension, or during a final audit period, as required by the OCIP Insurance Policies.

5.5 Contract Completion / Closeout Compliance

Contractor's Completion Notice

- Contractor's Completion Notice must be submitted to the Program Administrator via WrapPortal, (www.keenanwrap.com) upon completion of contract work at the Project Site, which includes punch list items, but not warranty or service contract work.
- This form evidences all enrolled Contractors'/Subcontractors' actual start and completion dates, per each contract.
- Completion Notice information is reported to OCIP Insurance carrier to confirm coverage and payroll reporting requirements has ended for the contract.

6.0 Safety

It is the responsibility of each Subcontractor to maintain an environment free of recognized hazards. All Subcontractors shall exercise reasonable care to prevent work-related injuries; property and equipment damage at the Project, as well as minimize risk to the public and third-party property.

In the event of an accident, it shall be the responsibility of the employer and/or responsible Subcontractor to see that injured workers or members of the public are provided immediate

medical treatment. All appropriate medical and claim forms must be filed in accordance with the claim procedures developed for this Project by the Program Administrator. This includes notification to the appropriate state authorities, if necessary.

The Program Administrator shall conduct periodic loss control surveys on behalf of the District. These surveys will focus on evaluating the Subcontractors' efforts to minimize loss, assist in identifying loss exposures, and to recommend appropriate corrective measures. The Program Administrator is a resource to supplement the safety and loss prevention activity of Subcontractors. Its loss control survey activities or other activities of the Program Administrator and/or OCIP insurers do not in any way relieve the Contractors/Subcontractors of their responsibilities for Project safety.

6.1 Occupational Safety and Health Compliance

All Contractors/Subcontractors are expected to comply with all applicable local, state, and federal occupational safety and health. If additional safety and health requirements are set forth in the contract specifications, all contractors shall comply with these requirements

In addition, local, state, and federal occupational safety and health laws, the following standards apply to all OCIP Enrolled and Non-Enrolled Contractors/Subcontractors.

6.2 Safety Orientation

a. Subcontractor employees shall be provided with a project specific safety orientation prior the start of the project. At a minimum, the orientation will address the following items:
   i. The District's site safety requirements.
   ii. Site specific safety hazards and protective measures for these hazards.
   iii. Emergency telephone numbers and procedures.
   iv. Local medical clinic/hospital information within the Medical Provider Network (MPN).

6.3 Program Management

a. Each Subcontractors shall have the following safety programs:
   i. Injury and Illness Prevention Plans
   ii. Hazard Communication Programs
   iii. Heat Illness Prevention Plans

b. Each Contractor/Subcontractor shall have an onsite competent person responsible for occupational safety and health. A competent person is one who is capable of identifying existing and predictable hazards in the surroundings or working conditions which are unsanitary, hazardous, or dangerous to employees, and who has authorization to take prompt corrective measures to eliminate them.

6.4 Site Safety

According to industry practices, it is the responsibility of contractors of all tiers to exercise reasonable care to prevent work-related injuries; property and equipment damage at the project site, as well as minimize risk to the third-party persons and property. Subcontractors of all tiers shall be expected to comply with the following safety and loss control requirements:

a. All Subcontractors shall identify their contact person(s) to the General or Prime Contractor.

b. All Contractors/Subcontractors shall follow District procedures for dealing with the media.

c. At all times, hard hats shall be worn in the construction environment. Hard hats shall meet the requirements of ANSI Z89.1. No modification to the shell or suspension is allowed except when such changes are approved by the manufacturer.

d. 100% protective eyewear with side shield protection is required while in the construction environment, shop, or anytime eye hazards exist. Protective eyewear shall bear a legible and permanent "Z87" logo to indicate compliance with applicable ANSI/ASSE Standard.

e. All construction employees shall wear clothing suitable for the weather and work conditions. At a minimum, this shall be short sleeved shirts, long pants, and leather or other protective work shoes or boots.

f. Alcohol is prohibited on District property at all times.

g. Contractors/Subcontractors will be required to respond to all District complaints about objectionable levels of dust or noise and will be required to provide prompt and appropriate abatement.

h. Construction personnel cannot enter District grounds other than the construction site unless accompanied by District personnel and are allowed only "incidental" contact with students. Violations of these requirements by any construction employee will result in a mandatory background check of that employee – including fingerprinting – as required by state law.

i. All prime contractors must attend the site-specific pre-construction meeting.

j. No sexual reference or preference shall be permitted on any piece of clothing or the hardhat. Any employee observed disregarding this policy shall be removed from the job site until further notice.

k. Contractors and subcontractors at all times shall keep premises free from debris such as waste, rubbish, and excess materials and equipment caused by contract work. Contractors and subcontractors shall not leave debris under, in, or about the premises. Upon completion of the contract work, contractors and subcontractors shall clean the interior and exterior of the building or improvement including fixtures, equipment, walls, floors, ceilings, roofs, windowsills and ledges, horizontal projections, and any areas where debris has collected so surfaces are free from foreign material or discoloration. Contractors and subcontractors shall clean and polish all glass, plumbing fixtures, and finish hardware and similar finish surfaces and equipment and contractor shall also remove temporary fencing, barricades, planking and construction toilet and similar temporary facilities from the site. No glass containers are permitted on the site.

l. Theft or willful damage to any property of the District, student, or other contractors will be prosecuted fully.

m. All Contractors/Subcontractors will advise non-English speaking employees in their native language either in a written format or via an interpreter of these policies.

6.5 Mandatory 6 Foot Fall Protection

a. Contractor/Subcontractor employees shall be protected from fall exposures of 6 feet or greater. Activities include but are not limited to:
    i. Steel erection
    ii. Decking
    iii. Roofing
    iv. Framing

v. Work performed from scaffolds
vi. Work performed from ladders

Exceptions: The following exceptions apply only to framers and wood frame activities

i. When installing or "rolling" the joists, Cal/OSHA fall protection requirements shall govern.
ii. When framers are walking/working on securely braced joists, rafters, or roof trusses on center spacing not exceeding 24 inches, and more than 6' from an unprotected side or edge, they shall be considered protected from falls between the joists, rafters, or roof trusses

b. A safety monitor as means of fall protection is prohibited.

c. Ladder jacks, lean-to, and prop-scaffolds are prohibited.

d. Contractor/Subcontractors are required to provide training to their employees who might be exposed to a fall hazard prior to the exposure or upon hiring. This training shall be documented and available for review.

e. Methods of fall protection include but are not limited to the following:

i. Railings
ii. Covers for Floor, Roof, and Wall Openings
iii. Personal Fall Arrest Systems, Personal Fall Restraint Systems, and Positioning Devices
iv. Controlled Access Zones

f. The design and construction of railings shall conform to the Cal/OSHA Construction Safety Orders.

g. The use of wire ropes as top rails and intermediate rails of guardrail systems used for perimeter protection, or at interior openings such as stairways and elevator shafts, shall be installed in accordance with Cal/OSHA requirements. Additionally, wire ropes shall be secured to each support and taut at all times. The maximum deflection of the top rail when a load of 200 pounds is applied in any direction at any point of the top rail shall not exceed 3 inches in one direction which includes the free hanging sag in the wire rope.

h. The minimum parapet height allowed for fall protection is 42 inches or greater.

i. Covers used to cover floor, roof, and wall openings shall be secured in place to prevent accidental removal or displacement and shall be marked in accordance in accordance with Cal/OSHA Construction Safety Orders.

j. Covers used to cover floor and roof openings shall be capable of safely supporting the greater of 400 pounds or twice the weight of the employees, equipment and materials that may be imposed on any one square foot area of the cover at any time.

k. Controlled access zones shall be defined by a control line or other means that restricts access. Each line shall have a minimum breaking strength of 200 pounds. Signs shall be posted to warn unauthorized employees to stay out of the controlled access zone.

l. Control lines shall consist of ropes, wires, tapes, or equivalent materials. Control lines shall be erected and supported in accordance with Cal/OSHA Construction Safety Orders.

m. Scaffold Access/Egress. An internal ladder system with hatches and drop-down ladders or temporary stairs shall be provided for safe access/egress on all scaffolds 20 feet or

greater in height. External straight ladders are prohibited on all scaffolds if it exposes a user to a fall of 20 feet or greater in height.

n. Exception: When adjustable scaffolds are utilized, test platforms shall not exceed 20' vertical intervals.

6.6 Crane Safety

a. In accordance with Title 8, California Code of Regulations, section 5006.1, employers shall only permit operators who have a valid certificate (license) of competency to operate cranes. The operator shall have his license on his person, readily available for review.
b. All cranes used in lifting service, exceeding 3 tons rated capacity, and their accessory gear shall not be used until the employer has ascertained that such equipment has been certificated in accordance with Cal/OSHA as evidenced by current and valid documents. Certificates (annual and quadrennial) attesting to current compliance with testing and examination standards shall be maintained, readily available for each crane.

6.7 Fire Prevention During Welding, Cutting, and Other Hot Work

a. Contractors engaged in welding and allied processes, heat treating, grinding, cutting, thawing pipe, powder-driven fasteners, hot riveting, torch-applied roofing in conjunction with the requirements of NFPA 241, and similar applications producing or using a spark, flame, or heat shall adhere to National Fire Protection Association Standard 51B entitled "Standard for Fire Prevention During Welding, Cutting, and Other Hot Work."

6.8 Incident Investigation Requirements

a. The contractor shall perform thorough, in-depth investigations and evaluations of all incidents. A formal incident investigation shall be conducted whenever any incident occurs, including, without limitation, both non-injury incidents and incidents involving first aid. Additionally, near miss accidents and/or incidents must be reported and undergo the same in-depth investigation, root cause analysis and lessons learned process. The incident investigation report shall be e-mailed to Keenan and Associates within 5 working days.
b. Recommendations and lessons learned to prevent recurrence of incidents shall be documented and communicated to all employees of contractor and subcontractors through safety meetings

6.9 Return to Work

The District and OCIP Carrier are committed to working with all Enrolled Contractors and Subcontractors to promote the successful & timely return to work of injured employees following a work-related injury. The purpose of this policy is to ensure that Enrolled Contractor/Subcontractor employees who temporarily cannot return to their normal duties due to job-related injury or illness but can safely perform transitional duties while recovering is offered appropriate transitional duties for a limited time only.

a. An employee who has experienced a job-related injury requiring medical treatment must provide a proper medical release prior to returning to work.

b. An employee who has been removed from the jobsite ambulatory must provide a proper medical release prior to returning to work.

c. Each Enrolled Contractor/Subcontractor will cooperate with the OCIP Carrier to facilitate the return to work of any injured employee capable of safely performing transitional duties.

d. When the employee is released to transitional duties, it is the Enrolled Contractor/Subcontractor's responsibility to facilitate the injured employee's return to work.

e. The Enrolled Contractor/Subcontractor is fully expected to accommodate the injured employee and facilitate the return to work.

f. It will be the responsibility of the Insurance Carrier to maintain communication with the treating physician and the Enrolled Contractor/Subcontractor to facilitate the prompt return of an employee to full work status.

6.10 Conflicting Safety Requirements:

Contractors and subcontractors shall adhere to all applicable federal, state, local, and contractual safety and health requirements. If there is a conflict between any of these safety and health requirements, the most stringent requirement shall apply.

6.11 Noncompliance and Unsafe Practices

Owner or their representative shall have the authority to immediately cease any and all operation (s) on the jobsite that is deemed by Owner or their representative to be unsafe to property or has the potential to cause Bodily Injury, pursuant to Title VIII California Code of Regulation, Section 1511. Any such cession of work shall not constitute recoverable delay or other contractual remedies for liquidated damages and may expose the offending contractor to any such losses to the District or other trades.

6.12 Professional Conduct Clause

Contractors and subcontractors shall at all times adhere to safety requirements (contractual and regulatory) and shall encourage safe and professional behavior among their employees. Contractor and subcontractors shall not allow on the job site any unfit person, unsafe person, anyone unskilled and unqualified to perform the work assigned to them, or anyone exhibiting such qualities. Any person in the employ of the contractor or subcontractor whom the District or the District's agent/representative may deem incompetent, unsafe, or unfit shall be immediately dismissed from the OCIP job site and shall not again be allowed on the OCIP the job site except with the written consent of District or the District's agent/representative. The District reserves the right to request that the contractor or subcontractor's assigned Project Supervisor/Manager be replaced immediately.

7.0 Claims Reporting

Accident/Claims Reporting Procedures - Overview

This section describes the basic procedures for reporting SEWUP claims: Workers' Compensation, General Liability, Pollution Liability, and Damage to the Project (Builder's Risk).

The OCIP Administrator provides an Accident Claims Reporting Guide to Enrolled Contractors and Subcontractors. The Accident Claims Reporting Guide provides instructions and necessary information for reporting a claim, including policy numbers and site location codes. **This manual includes the required claim forms and postings**. Additional claim forms can be obtained from the OCIP Administrator upon request.

7.1 Workers' Compensation Claim Reporting & Procedures

If the injury requires a doctor (or medical office) visit or involves lost time, please follow the procedures listed below.

Contractors'/Subcontractors' on-site personnel must follow these procedures if any employee is involved in an accident or occurrence resulting in bodily injury or death:

The main responsibility for any Contractor and Subcontractor is first to see that the injured worker receives immediate medical care. Immediately contact 911 for any serious, traumatic, and life-threatening injuries.

If an employee reports a work injury or illness that is minor and does not require a doctor visit or time off from work, the supervisor should refer the employee to the nearest **First Aid Treatment** available at the jobsite.

Call Liberty Mutual Insurance Company at **1-800-362-0000 or email them at CLclaimsreports@libertymutual.com** to report the injury. Access the Workers' Compensation Claim Kit, sent to you by the Program Administrator, which contains forms to be completed by employee and employer, as well as accident reporting guidelines. Have the following items ready when reporting the claim:

- SEWUP **Workers' Compensation Policy Number (Provided at time of enrollment)**
- SEWUP **Site Location Code**

Medical Provider Network (MPN)

Liberty Mutual Insurance, the Statewide Educational Wrap Up Program's insurance carrier, has implemented the following Medical Provider Network (MPN):

Liberty Mutual Insurance MPN

The above MPN is to be utilized for the medical treatment of injured employees, unless the employee has pre-designated their medical provider prior to the date of loss. In emergency situations, it is always recommended that the injured worker be treated at an emergency medical facility first, and then sent to a physician in the Medical Provider Network (MPN).

MPN Regulations & Guidelines:

- California MPN rules and regulations require that the injured worker must receive the Full Written MPN Notification when an injury is reported, or at the time of injury. The English version is given to English speaking employees and the Spanish version is given to Spanish speaking employees. The Full Written MPN Notification must also be given to the injured worker when changing to and transferring open claims to the Gallagher Bassett Platinum MPN.
- The MPN regulations are silent about Employee Acknowledgement Letters. As an employer, you have the right to use acknowledgement letters for your employees to sign when you give your employee the Full Written MPN Notification.
- An MPN Panel Card shall be posted at SEWUP Project Jobsite, Displaying the Name, Address and a Map of Designated Medical Clinic close to the jobsite.
- **For locating participating medical providers** within the Liberty Mutual Insurance MPN, use your Internet Browser to access the below website, which will provide links for locating a medical provider within the network by specialty and by location,

  https://lmi.co/LMnetworks

State Required Workers' Compensation Forms

The Labor Code requires that an employee report any injury immediately to the employer. There are essential requirements for both the employer and employee to after the injury has been reported.

The Labor Code provides for possible penalties to be assessed if the following timelines are not met:

- Provision of the Employee Claim Form, DWC-1; report within one (1) working day of the employer's knowledge of a disability or injury beyond first aid. Each employer is responsible for providing this form to an injured employee. Should the employee not be available for hand delivery, mail the DWC-1 to the employee at their home address.
- Provision of the Employer's Report of Injury, Form 5020; report, within five (5) days of knowledge, every occupational injury or illness which results in lost time beyond the date of the incident or requires medical treatment at a medical facility. In addition, every serious illness/injury or death must be reported immediately by telephone or fax to the nearest office of the California Division of Occupational Safety and Health.

7.2 General Liability Claim Reporting

Contractors/Subcontractor must immediately report all known or suspected First Party, Third Party or Pollution Liability incidents occurring at the Project Site involving bodily injury, death, or any damage to property to the following:

- Keenan & Associates - **1-310-212-0363 x.2116**. Have the following information ready when reporting claim
    - SEWUP **General Liability Policy Number**
    - SEWUP **Site Location Code**
- Program Administrator (SEWUP) – Email: TMyer@Keenan.com & SEWUP@keenan.com, Phone: (800) 654-8102. Notice of Occurrence - Accident/Incident Report may be email or faxed.

Note:
Always take appropriate emergency measures to prevent additional injury or damage, including contacting police and fire authorities as required by law.

7.3 Builder's Risk Claim Reporting

Contractors/Subcontractors must immediately report all property damage to your work or work of any other Contractor/Subcontractor at the Project Site, to the following:

- Keenan & Associates - **1-310-212-0363 x.2116**
- Ace USA Property Claims – Email: Propertyfirstnotices@acegroup.com, Phone: (800) 433-0385
- Program Administrator (SEWUP) – Email: TMyer@Keenan.com & SEWUP@keenan.com, Phone: (800) 654-8102.

Note:
Always take appropriate emergency measures to prevent additional injury or damage, including contacting police and fire authorities as required by law.

7.4 Contractor's Pollution Liability Claim Reporting

Contractors/Subcontractors must immediately report all third-party accidents related to a known or suspected pollution incident at the Project Site involving bodily injury, death, or any damage to property to the following:

- Keenan & Associates - **1-310-212-0363 x.2116**
- Berkley Assurance Company - Electronic Reporting - **BCPclaims@BerkleyCP.com**
- Program Administrator (SEWUP) – Email: TMyer@Keenan.com & SEWUP@keenan.com, Phone: (800) 654-8102.

7.5 Automobile Claim Reporting

NO coverage is provided for automobile use by Contractors/Subcontractors under the OCIP. It is the sole responsibility of each Contractor and Subcontractor to report claims involving their automobiles to their own insurance carrier.

7.6 Instructions and Procedures – Litigation Papers, Legal Documents, etc.

If your firm is served with a lawsuit arising out of your involvement with the Owner's Project, or if receipt of litigation papers or legal documents is your first notice of a claim, forward to the following:

- Program Administrator (SEWUP) – Email**:** SEWUP@keenan.com**,** Phone: (800) 654-8102

7.7 Investigation Assistance/Confirmation of Claim Receipt

All Contractors/Subcontractors will assist in the investigation of any accident or occurrence involving injury to persons or property. All Contractors/Subcontractors must cooperate with the companies involved in adjusting any claim by securing and giving evidence and obtaining the participation and attendance of witnesses required for the investigation and defense of any claim or suit.

Upon receipt of the claim or incident from the Contractor, the respective OCIP insurance carrier will send a claims acknowledgment letter with the assigned claims file number. Always cooperate with the Owner or the OCIP insurer representatives in the accident investigation.

8.0 Required Project Forms

- **8.1 First Report of Injury (5020)**
- **8.2 Workers' Compensation Claim Form (DWC-1)**
- **8.3 Notice of Occurrence - Accident/Incident Report – General Liability, Pollution, Builders Risk**

8.1 First Report of Injury (5020)

District Name: _____

Project Name: _____

State of California **EMPLOYER'S REPORT OF OCCUPATIONAL INJURY OR ILLNESS**	PLEASE COMPLETE (TYPE, IF POSSIBLE). MAIL TWO COPIES TO:	**OSHA CASE NO.** ☐ FATALITY

Any person who makes or causes to be made any knowingly false or fraudulent material statement or material representation for the purpose of obtaining or denying workers compensation benefits or payments of guilty of a felony.

NOTICE: California law requires employers to report within five days of knowledge every occupational injury or illness which results in lost time beyond the date of the incident OR requires medical treatment beyond first aid. If an employee subsequently dies as a result of a previously reported injury or illness, the employer must file within five days of knowledge an amended report indicating death. In addition, every serious illness/injury or death must be reported immediately by telephone or telegraph to the nearest office of the California Division of Occupational Safety and Health

EMPLOYER

1. FIRM NAME		1A. POLICY NUMBER	DO NOT USE THIS COLUMN
2. MAILING ADDRESS (Number and Street, City, ZIP)		2A. PHONE NUMBER	Case No.
3. LOCATION, IF DIFFERENT FROM MAILING ADDRESS (Number and Street, City, ZIP)		3A. LOCATION CODE	Ownership
4. NATURE OF BUSINESS, e.g., painting contractor, wholesale grocer, sawmill, hotel, etc.	5. STATE UNEMPLOYMENT INSURANCE ACCT NUMBER		Industry
6. TYPE OF EMPLOYER ☐ PRIVATE ☐ STATE ☐ CITY ☐ COUNTY ☐ SCHOOL DIST. ☐ OTHER GOV. – SPECIFY _____			Occupation

EMPLOYEE

7. EMPLOYEE NAME	8. SOCIAL SECURITY NUMBER	9. DATE OF BIRTH (mm dd yy)	Sex
10 HOME ADDRESS (Number and Street, City, ZIP)		10A PHONE NUMBER	Age
11. SEX ☐ MALE ☐ FEMALE	12. OCCUPATION (Regular job title – NO initials, abbreviations or numbers)	13 DATE OF HIRE (mm dd yy)	Daily Hours
14 EMPLOYEE USUALLY WORKS ____ hours per day ____ days per week ____ total wkly. hrs	14A EMPLOYMENT STATUS (check applicable status at time of injury) ___ regular full-time ___ part time ___ temp. ___ seasonal	14B Under what class code of your policy were wages assigned	Days/week
15 GROSS WAGES/SALARY $_____ PER _____	16 OTHER PAYMENTS NOT REPORTED AS WAGES/Salary (e.g., tips, meals, lodging, overtime, bonuses, etc.)? ☐ YES $_____ PER _____ ☐ NO		Weekly Hours

INJURY OR ILLNESS

17. DATE OF INJURY OR ONSET OF ILLNESS (mm dd yy)	18 TIME INJURY ILLNESS OCCURRED A.M. P.M.	19 TIME EMPLOYEE BEGAN WORK A.M. P.M.	20. IF EMPLOYEE DIED, DATE OF DEATH (mm dd yy)	Weekly Wage
21 UNABLE TO WORK FOR AT LEAST ONE FULL DAY AFTER DATE OF INJURY ☐ YES ☐ NO	22. DATE LAST WORKED (mm dd yy)	23. DATE RETRUNED TO WORK (mm dd yy)	24. IF STILL OFF WORK CHECK THIS BOX ☐	County
25. PAID FULL WAGES FOR DAY OF INJURY OR LAST DAY WORKED ☐ YES ☐ NO	26. SALARY BEING CONT'D? ☐ YES ☐ NO	27. DATE OF EMPLOYER'S KNOWLEDGE NOTICE OF INJURY/ILLNESS (mm dd yy)	28. DATE EMPLOYEE WAS PROVIDED EMPLOYEE CLAIM FORM (mm dd yy)	Nature of Injury
29. SPECIFIC INJURY/ILLNESS AND PART OF BODY AFFECTED, MEDICAL DIAGNOSIS, if available , e.g., second degree burns on right arm, tendonitis of left elbow, lead poisoning				Part of Body
30. LOCATION WHERE EVENT OR EXPOSURE OCCURRED (Number and Street, City)	30A COUNTY	30B. ON EMPLOYER'S PREMISES ☐ YES ☐ NO		Source
31 DEPARTMENT WHERE EVENT OR EXPOSURE OCCURRED, e.g. shipping department, machine shop.		32. OTHER WORKERS INJURED/ ILL IN THIS EVENT? ☐ YES ☐ NO		Event
33. EQUIPMENT, MATERIALS AND CHEMICALS THE EMPLOYEE WAS USING WHEN EVENT OR EXPOSURE OCCURRED, e.g., acetylene, welding torch, farm tractor, scaffold				Sec. Source
34. SPECIFIC ACTIVITY THE EMPLOYEE WAS PERFORMING WHEN EVENT OR EXPOSURE OCCURRED, e.g., welding seams of metal forms, loading boxes into truck				Extent of Injury
35 HOW INJURY/ILLNESS OCCURRED. DESCRIBE SEQUENCE OF EVENTS SPECIFY OBJECT OR EXPOSURE WHICH DIRECTLY PRODUCED THE INJURY/ILLNESS (e.g., worker stepped back to inspect work and slipped on scrap material. As he fell, he brushed against fresh weld and burned right hand). USE SEPARATE SHEET IF NECESSARY				
36. NAME AND ADDRESS OF PHYSICIAN (Number and Street, City, ZIP)		36A. PHONE NUMBER		
37 IF HOSPITALIZED AS AN INPATIENT, NAME AND ADDRESS OF HOSPITAL (Number and Street, City, ZIP)		37A. PHONE NUMBER		

COMPLETED BY (type or print)	SIGNATURE	TITLE	DATE

8.2 Workers' Compensation Claim Form (DWC-1)

Formulario de Reclamo de Compensación para Trabajadores (DWC 1) y Notificación de Posible Elegibilidad

If you are injured or become ill, either physically or mentally, because of your job, including injuries resulting from a workplace crime, you may be entitled to workers' compensation benefits. Attached is the form for filing a workers' compensation claim with your employer. **You should read all of the information below.** Keep this sheet and all other papers for your records. You may be eligible for some or all of the benefits listed depending on the nature of your claim. If required you will be notified by the claims administrator, who is responsible for handling your claim, about your eligibility for benefits.

To file a claim, complete the "Employee" section of the form, keep one copy and give the rest to your employer. Your employer will then complete the "Employer" section, give you a dated copy, keep one copy and send one to the claims administrator. Benefits can't start until the claims administrator knows of the injury, so complete the form as soon as possible.

Medical Care: Your claims administrator will pay all reasonable and necessary medical care for your work injury or illness. Medical benefits may include treatment by a doctor, hospital services, physical therapy, lab tests, x-rays, and medicines. Your claims administrator will pay the costs directly so you should never see a bill. For injuries occurring on or after 1/1/04, there is a limit on some medical services.

The Primary Treating Physician (PTP) is the doctor with the overall responsibility for treatment of your injury or illness. Generally your employer selects the PTP you will see for the first 30 days, however, in specified conditions, you may be treated by your predesignated doctor. If a doctor says you still need treatment after 30 days, you may be able to switch to the doctor of your choice. Special rules apply if your employer offers a Health Care Organization (HCO) or after 1/1/05, has a medical provider network. Contact your employer for more information. If your employer has not put up a poster describing your rights to workers' compensation, you may choose your own doctor immediately.

Within one working day after an employee files a claim form, the employer shall authorize the provision of all treatment, consistent with the applicable treating guidelines, for the alleged injury and shall continue to provide treatment until the date that liability for the claim is accepted or rejected. Until the date the claim is accepted or rejected, liability for medical treatment shall be limited to ten thousand dollars ($10,000).

Disclosure of Medical Records: After you make a claim for workers' compensation benefits, your medical records will not have the same privacy that you usually expect. If you don't agree to voluntarily release medical records, a workers' compensation judge may decide what records will be released. If you request privacy, the judge may "seal" (keep private) certain medical records.

Payment for Temporary Disability (Lost Wages): If you can't work while you are recovering from a job injury or illness, you will receive temporary disability payments. These payments may change or stop when your doctor says you are able to return to work. These benefits are tax-free. Temporary disability payments are two-thirds of your average weekly pay, within minimums and maximums set by state law. Payments are not made for the first three days you are off the job unless you are hospitalized overnight or cannot work for more than 14 days.

Si Ud. se lesiona o se enferma, ya sea física o mentalmente, debido a su trabajo, incluyendo lesiones que resulten de un crimen en el lugar de trabajo, es posible que Ud. tenga derecho a beneficios de compensación para trabajadores. Se adjunta el formulario para presentar un reclamo de compensación para trabajadores con su empleador. **Ud. debe leer toda la información a continuación.** Guarde esta hoja y todos los demás documentos para sus archivos. Es posible que usted reúna los requisitos para todos los beneficios, o parte de éstos, que se enumeran, dependiendo de la índole de su reclamo. Si se requiere, el/la administrador(a) de reclamos, quien es responsable del manejo de su reclamo, le notificará a usted, lo referente a su elegibilidad para beneficios.

Para presentar un reclamo, complete la sección del formulario designada para el "Empleado", guarde una copia, y déle el resto a su empleador. Entonces, su empleador completará la sección designada para el "Empleador", le dará a Ud. una copia fechada, guardará una copia, y enviará una al/a la administrador(a) de reclamos. Los beneficios no pueden comenzar hasta, que el/la administrador(a) de reclamos se entere de la lesión, así que complete el formulario lo antes posible.

Atención Médica: Su administrador(a) de reclamos pagará toda la atención médica razonable y necesaria, para su lesión o enfermedad relacionada con el trabajo. Es posible que los beneficios médicos incluyan el tratamiento por parte de un médico, los servicios de hospital, la terapia física, los análisis de laboratorio y las medicinas. Su administrador(a) de reclamos pagará directamente los costos, de manera que usted nunca verá un cobro. Para lesiones que ocurren en o después de 1/1/04, hay un límite de visitas para ciertos servicios médicos.

El Médico Primario que le Atiende-*Primary Treating Physician PTP* es el médico con toda la responsabilidad para dar el tratamiento para su lesion o enfermedad. Generalmente, su empleador selecciona al *PTP* que Ud. Verá durante los primeros 30 días. Sin embargo, en condiciones específicas, es posible que usted pueda ser tratado por su médico pre-designado. Si el doctor dice que usted aún necesita tratamiento después de 30 días, es possible que Ud. pueda cambiar al médico de su preferencia. Hay reglas especiales que son aplicables cuando su empleador ofrece una Organización del Cuidado Médico (HCO) o depués de 1/1/05 tiene un Sistema de Proveedores de Atención Médica. Hable con su empleador para más información. Si su empleador no ha colocado un poster describiendo sus derechos para la compensación para trabajadores, Ud. puede seleccionar a su propio medico inmediatamente.

El empleador autorizará todo tratamiento médico consistente con las directivas de tratamiento applicables a la lesión o enfermedad, durante el primer día laboral después que el empleado efectúa un reclamo para beneficios de compensación, y continuará proveyendo este tratamiento hasta la fecha en que el reclamo sea aceptado o rechazado. Hasta la fecha en que el reclamo sea aceptado o rechazado, el tratamiento médico será limitado a diez mil dólares ($10,000).

Divulgación de Expedientes Médicos: Después de que Ud. presente un reclamo para beneficios de compensación para los trabajadores, sus expedientes médicos no tendrán la misma privacidad que usted normalmente espera. Si Ud. no está de acuerdo en divulgar voluntariamente los expedientes médicos, un(a) juez de compensación para trabajadores posiblemente decida qué expedientes se revelarán. Si Ud. Solicita privacidad, es posible que el/la juez "selle" (mantenga privados) ciertos expedientes médicos.

Pago por Incapacidad Temporal (Sueldos Perdidos): Si Ud. no puede trabajar, mientras se está recuperando de una lesión o enfermedad relacionada con el trabajo, Ud. recibirá pagos por incapacidad temporal. Es posible que estos pagos cambien o paren, cuando su médico diga que Ud. está en condiciones de regresar a trabajar. Estos beneficios son libres de impuestos. Los pagos por incapacidad temporal son dos tercios de su pago semanal promedio, con cantidades mínimas y máximas establecidas por las leyes estatales. Los pagos no se hacen durante los primeros tres

Return to Work: *To help you to return to work as soon as* pos
you should actively communicate with your treating do
claims administrator, and employer about the kinds of work you can do while recovering. They may coordinate efforts to return you to modified duty or other work that is medically appropriate. This modified or other duty may be temporary or may be extended depending on the nature of your injury or illness.

Payment for Permanent Disability: If a doctor says your injury or illness results in a permanent disability, you may receive additional payments. The amount will depend on the type of injury, your age, occupation, and date of injury.

Vocational Rehabilitation (VR): If a doctor says your injury or illness prevents you from returning to the same type of job and your employer doesn't offer modified or alternative work, you may qualify for VR. If you qualify, your claims administrator will pay the costs, up to a maximum set by state law. VR is a benefit for injuries that occurred prior to 2004.

Supplemental Job Displacement Benefit (SJDB): If you do not return to work within 60 days after your temporary disability ends, and your employer does not offer modified or alternative work, you may qualify for a nontransferable voucher payable to a school for retraining and/or skill enhancement. If you qualify, the claims administrator will pay the costs up to the maximum set by state law based on your percentage of permanent disability. SJDB is a benefit for injuries occurring on or after 1/1/04.

Death Benefits: If the injury or illness causes death, payments may be made to relatives or household members who were financially dependent on the deceased worker.

It is illegal for your employer to punish or fire you for having a job injury or illness, for filing a claim, or testifying in another person's workers' compensation case (Labor Code 132a). If proven, you may receive lost wages, job reinstatement, increased benefits, and costs and expenses up to limits set by the state.

You have the right to disagree with decisions affecting your claim. If you have a disagreement, contact your claims administrator first to see if you can resolve it. If you are not receiving benefits, you may be able to get State Disability Insurance (SDI) benefits. Call State Employment Development Department at (800) 480-3287.

You can obtain free information from an information and assistance officer of the State Division of Workers' Compensation, or you can hear recorded information and a list of local offices by calling **(800) 736-7401**. You may also go to the DWC web site at **www.dir.ca.gov**. Link to Workers' Compensation.

You can consult with an attorney. Most attorneys offer one free consultation. If you decide to hire an attorney, his or her fee will be taken out of some of your benefits. For names of workers' compensation attorneys, call the State Bar of California at (415) 538-2120 or go to their web site at **www.californiaspecialist.org**.

ıs en que Ud. no trabaje, a menos que Ud. sea hospitalizado(a) de
ıche, o no pueda trabajar durante más de 14 días.

Regreso al Trabajo: Para ayudarle a regresar a trabajar lo antes posible, Ud. debe comunicarse de manera activa con el médico que le atienda, el/la administrador(a) de reclamos y el empleador, con respecto a las clases de trabajo que Ud. puede hacer mientras se recupera. Es posible que ellos coordinen esfuerzos para regresarle a un trabajo modificado, o a otro trabajo, que sea apropiado desde el punto de vista médico. Este trabajo modificado, u otro trabajo, podría extenderse o no temporalmente, dependiendo de la índole de su lesión o enfermedad.

Pago por Incapacidad Permanente: Si el doctor dice que su lesión o enfermedad resulta en una incapacidad permanente, es posible que Ud. reciba pagos adicionales. La cantidad dependerá de la clase de lesión, su edad, su ocupación y la fecha de la lesión.

Rehabilitación Vocacional: Si el doctor dice que su lesión o enfermedad no le permite regresar a la misma clase de trabajo, y su empleador no le ofrece trabajo modificado o alterno, es posible que usted reúna los requisitos para rehabilitación vocacional. Si Ud. reúne los requisitos, su administrador(a) de reclamos pagará los costos, hasta un máximo establecido por las leyes estatales. Este es un beneficio para lesiones que ocurrieron antes de 2004.

Beneficio Suplementario por Desplazamiento de Trabajo: Si Ud. No vuelve al trabajo en un plazo de 60 días después que los pagos por incapcidad temporal terminan, y su empleador no ofrece un trabajo modificado o alterno, es posible que usted reúne los requisitos para recibir un vale no-transferible pagadero a una escuela para recibir un Nuevo entrenamiento y/o mejorar su habilidad. Si Ud. reúne los requisitios, el administrador(a) de reclamos pagará los costos hasta un máximo establecido por las leyes estatales basado en su porcentaje del incapicidad permanente. Este es un beneficio para lesiones que ocurren en o después de 1/1/04.

Beneficios por Muerte: Si la lesión o enfermedad causa la muerte, es posible que los pagos se hagan a los parientes o a las personas que vivan en el hogar, que dependían económicamente del/de la trabajador(a) difunto(a).

Es ilegal que su empleador le castigue o despida, por sufrir una lesión o enfermedad en el trabajo, por presentar un reclamo o por atestiguar en el caso de compensación para trabajadores de otra persona. (El Codigo Laboral sección 132a). Si es probado, puede ser que usted reciba pagos por perdida de sueldos, reposición del trabajo, aumento de beneficios, y gastos hasta un límite establecido por el estado. Ud. tiene derecho a estar en desacuerdo con las decisiones que afecten su reclamo. Si Ud. tiene un desacuerdo, primero comuníquese con su administrador(a) de reclamos, para ver si usted puede resolverlo. Si usted no está recibiendo beneficios, es posible que Ud. pueda obtener beneficios de Seguro Estatal de Incapacidad (SDI). Llame al Departamento Estatal del Desarrollo del Empleo (EDD) al (800) 480-3287.

Ud. puede obtener información gratis, de un oficial de información y asistencia, de la División estatal de Compensación al Trabajador *(Division of Workers' Compensation – DWC)*, o puede escuchar información grabada, así como una lista de oficinas locales, llamando al **(800) 736-7401**. Ud. también puede ir al sitio electrónico en el Internet de la DWC en **www.dir.ca.gov.** Enlácese a la sección de Compensación para Trabajadores.

Ud. puede consultar con un(a) abogado(a). La mayoría de los abogados ofrecen una consulta gratis. Si Ud. decide contratar a un(a) abogado(a), sus honorarios se tomarán de sus beneficios. Para obtener nombres de abogados de compensación para trabajadores, llame a la Asociación Estatal de Abogados de California *(State Bar)* al (415) 538-2120, ó vaya a su sitio electrónico en el Internet en **www.californiaspecialist.org**.

DIVISION OF WORKERS' COMPENSATION

Estado de California
Departamento de Relaciones Industriales
DIVISION DE COMPENSACIÓN AL TRABAJADOR

WORKERS COMPENSATION CLAIM FORM (DWC 1)

PETITION DEL EMPLEADO PARA DE COMPENSACIÓN DEL TRABAJADOR (DWC 1)

Employee: Complete the **"Employee"** section and give the form to your employer. Keep a copy and mark it **"Employee's Temporary Receipt"** until you receive the signed and dated copy from your employer. You may call the Division of Workers' Compensation and hear recorded information at **(800) 736-7401**. An explanation of workers' compensation benefits is included as the cover sheet of this form.

You should also have received a pamphlet from your employer describing workers' compensation benefits and the procedures to obtain them.

Any person who makes or causes to be made any knowingly false or fraudulent material statement or material representation for the purpose of obtaining or denying workers' compensation benefits or payments is guilty of a felony.

Empleado: *Complete la sección* ***"Empleado"*** *y entregue la forma a su empleador. Quédese con la copia designada* ***"Recibo Temporal del Empleado"*** *hasta que Ud. reciba la copia firmada y fechada de su empleador. Ud. puede llamar a la Division de Compensación al Trabajador al* ***(800) 736-7401*** *para oir información gravada. En la hoja cubierta de esta forma esta la explicatión de los beneficios de compensación al trabjador.*

Ud. también debería haber recibido de su empleador un folleto describiendo lo s benficios de compensación al trabajador lesionado y los procedimientos para obtenerlos.

Toda aquella persona que a propósito haga o cause que se produzca cualquier declaración o representación material falsa o fraudulenta con el fin de obtener o negar beneficios o pagos de compensación a trabajadores lesionados es culpable de un crimen mayor "felonia".

Employee—complete this section and see note above. ***Empleado—complete esta sección y note la notación arriba.***

1. Name. *Nombre.* _____ Today's Date. *Fecha de Hoy.* _____
2. Home Address. *Dirección Residencial.* _____
3. City. *Ciudad.* _____ State. *Estado.* _____ Zip. *Código Postal.* _____
4. Date of Injury. *Fecha de la lesión (accidente).* _____ Time of Injury. *Hora en que ocurrió.* _____ a.m. _____ p.m.
5. Address and description of where injury happened. *Dirección/lugar dónde occurió el accidente.* _____
6. Describe injury and part of body affected. *Describa la lesión y parte del cuerpo afectada.* _____
7. Social Security Number. *Número de Seguro Social del Empleado.* _____
8. Signature of employee. *Firma del empleado.* _____

Employer—complete this section and see note below. ***Empleador—complete esta sección y note la notación abajo.***

9. Name of employer. *Nombre del empleador.* _____
10. Address. *Dirección.* _____
11. Date employer first knew of injury. *Fecha en que el empleador supo por primera vez de la lesión o accidente.* _____
12. Date claim form was provided to employee. *Fecha en que se le entregó al empleado la petición.* _____
13. Date employer received claim form. *Fecha en que el empleado devolvió la petición al empleador.* _____
14. Name and address of insurance carrier or adjusting agency. *Nombre y dirección de la compañía de seguros o agencia adminstradora de seguros.* _____
15. Insurance Policy Number. *El número de la póliza de Seguro.* _____
16. Signature of employer representative. *Firma del representante del empleador.* _____
17. Title. *Título.* _____ 18. Telephone. *Teléfono.* _____

Employer: You are required to date this form and provide copies to your insurer or claims administrator and to the employee, dependent or representative who filed the claim within **one working day** of receipt of the form from the employee.

SIGNING THIS FORM IS NOT AN ADMISSION OF LIABILITY

Empleador: *Se requiere que Ud. feche esta forma y que provéa copias a su compañía de seguros, administrador de reclamos, o dependiente/representante de reclamos y al empleado que hayan presentado esta petición dentro del plazo de* ***un día hábil*** *desde el momento de haber sido recibida la forma del empleado.*

EL FIRMAR ESTA FORMA NO SIGNIFICA ADMISION DE RESPONSABILIDAD

- ❑ Employer copy / *Copia del Empleador*
- ❑ Employee copy / *Copia del Empleado*
- ❑ Claims Administrator / *Administrador de Reclamos*
- ❑ Temporary Receipt/ / *Recibo del Empleado*

8.3 Notice of Occurrence - Accident/Incident Report – General Liability, Pollution, Builder's Risk

SEWUP

Notice of Occurrence

ACCIDENT / INCIDENT REPORT – GENERAL LIABILITY/POLLUTION/BUILDERS RISK

Keenan & Associates 2355
Crenshaw Blvd. Torrance, CA 90501
www.SEWUP.ORG
Licence No. 0451271

Date:

Contact:	Project Location Code:	Date of Loss & Time:	☐ AM ☐ PM
Phone:			
Cell:	Carrier:		NAIC Code:
Fax:	Policy No.:		Client ID No.:
Email:			

School District

Name of Insured:		Insureds Mailing Address:	
Contact Name:	Title:		
Primary Phone: ☐ Bus ☐ Cell	Secondary Phone: ☐ Bus ☐ Cell	Primary Email:	Secondary Email:

Contractor

Name of Insured:		Insureds Mailing Address:	
Contact Name:	Title:		
Primary Phone: ☐ Bus ☐ Cell	Secondary Phone: ☐ Bus ☐ Cell	Primary E-mail:	Secondary E-mail:

Occurrence

Location of Occurrence / Address (Describe Location if No Specific Address):	Police or Fire Dept. Contacted?
	Report No.:
Description of Occurrence:	

Property

Premises: Claimant (1) is: ☐ Owner ☐ Tenant ☐ Insured Party		Premises: Claimant (2) is: ☐ Owner ☐ Tenant ☐ Insured Party	
Type of Damage:		Type of Damage:	
Damaged Party (1) Name & Address (If not insured):		Damaged Party (2) Name & Address (If not insured):	
Primary Phone:	☐ Home ☐ Bus. ☐ Cell	Primary Phone:	☐ Home ☐ Bus. ☐ Cell
Secondary Phone:	☐ Home ☐ Bus. ☐ Cell	Secondary Phone:	☐ Home ☐ Bus. ☐ Cell
Primary Email:		Primary Email:	
Secondary Email:		Secondary Email:	
Location of Property for Inspection:		Location of Property for Inspection:	

SEWUP - Notice of Occurrence Page 1 of 2

Injured Party

Damaged Party (1) Name & Address (If not insured):				Damaged Party (2) Name & Address (If not insured):			
Primary Phone:		☐Home ☐Bus ☐Cell		Primary Phone:		☐Home ☐Bus ☐Cell	
Secondary Phone:		☐Home ☐Bus ☐Cell		Secondary Phone:		☐Home ☐Bus ☐Cell	
Primary E-mail:				Primary E-mail:			
Secondary E-mail:				Secondary E-mail:			
Age:	Sex:	Occupation:		Age:	Sex:	Occupation:	
Where Taken:				Where Taken:			
Describe Injury:				Describe Injury:			
What Was Injured Doing:				What Was Injured Doing:			

Witnesses

Damaged Party (1) Name & Address (If not insured):			Damaged Party (2) Name & Address (If not insured):		
Primary Phone:		☐Home ☐Bus ☐Cell	Primary Phone:		☐Home ☐Bus ☐Cell
Secondary Phone:		☐Home ☐Bus ☐Cell	Secondary Phone:		☐Home ☐Bus ☐Cell
Primary E-mail:			Primary E-mail:		
Secondary E-mail:			Secondary E-mail:		

Remarks

Reported By:	Reported To:

9.0 Frequency Asked Questions (FAQs)

General

1. **Who is insured under an Owner Controlled Insurance Program?**

   The Owner and all enrolled Contractors and their enrolled Subcontractors of any tier who perform operations at the Project Site described in the Contract Documents are insured under the OCIP.

2. **Who is managing the Owner Controlled Insurance Program?**

   Keenan & Associates is the Program Administrator for this Owner Controlled Insurance Program, otherwise known as Statewide Educational Wrap Up Program (SEWUP).

3. **Is Project Site Defined?**

   Yes. Project Site is on file with the insurance company, as described in the applicable Contract Documents.

4. **What insurance is provided to Contractors/Subcontractors under the Owner Controlled Insurance Program (OCIP)?**

   The Owner has agreed to procure the following insurance:

   a. Workers' Compensation and Employer's Liability
   b. General Liability Insurance for Personal Injury, Bodily Injury and Property Damage Liability
   c. Builder's Risk
   d. Contractor's Pollution Liability (course of construction only)

5. **Does the OCIP cover any contractor's equipment?**

   No. Contractors and Subcontractors must maintain this coverage.

6. **Are there other types of insurance normally purchased by Contractors, which are not included?**

   Yes. Examples are:

   a. Bonds, if required by contract
   b. Contractor's Automobile Liability and Physical Damage Insurance
   c. Contractor's Equipment Floater

7. **Does the Contractor/Subcontractor insured under the OCIP have to provide evidence of insurance?**

Yes. The contract requires that, prior to commencement of on-site activities; each Contractor/Subcontractor shall furnish a Certificates of Insurance evidencing coverage for:

a. Workers' Compensation
b. General Liability

Certificates of Insurance and Additional Named Insured Endorsements, specifically naming the Owner, are also required for:

a. Automobile Liability
b. Any other required coverages outlined in the Contract and the Project Insurance Manual.

8. **How is the Contractor/Subcontractor's bid to be submitted?**

The Contractor/Subcontractor needs to submit their bid excluding certain insurance costs, as outlined in the Contract. Change Orders also need to be submitted without insurance costs.

9. **When will the Contractor/Subcontractor receive a Certificate of Insurance insuring them under the OCIP?**

Eligible Contractors/Subcontractors awarded a contract will be furnished a Certificate of Insurance upon Program Administrator's review and acceptance of the Contract Enrollment via WrapPortal.

10. **Will all Contractors/Subcontractors receive information concerning their loss experience?**

This information is available, upon request, from the Program Administrator.

11. **How long are the policies kept in-force for the Contractor/Subcontractor?**

The policy periods commence on the date of "Award" and terminate as defined in the Contract Documents. The only extension is for General Liability "Completed Operations" which is for ten (10) years after Notice of Completion filed by the District.

12. Does the OCIP provide coverage for truckers, vendors and suppliers?

No. Contractors/Subcontractors, whose sole duties are as truckers, vendors, or suppliers are not included in the program. If contracted with an on-site installer, vendors and/or suppliers should be enrolled in the OCIP for General Liability only, as it pertains to the contractual relationship of the installer's on-site work.

13. Are all Contractors/Subcontractors, of any tier, required to complete their own OCIP enrollment before they will be allowed to begin job site activity?

All Contractors/Subcontractors, regardless of tier, must complete a Contract Enrollment via WrapPortal, prior to commencement of on-site activities. Upon acceptance by the OCIP Administrator, each Contractor/Subcontractor will receive an enrollment confirmation packet, which includes a Certificate of Insurance evidencing the OCIP coverages.

14. What document do I use to show my Agent/Broker and Insurer that I'm covered under the OCIP?

All contractors enrolled under the OCIP program receive individual workers' compensation policies and Certificates of Insurance evidencing coverage under the OCIP program.

Workers' Compensation and Employers' Liability Insurance Questions

1. What insurance company writes the Workers' Compensation and Employer's Liability coverage?

Liberty Mutual Insurance Company.

2. What is the coverage term?

The coverage term for each Contractor/Subcontractor will coincide with the Start Date provided at OCIP enrollment. OCIP Workers' Compensation policies are renewed each year until receipt of OCIP Contractor's Completion Notice.

3. How will the Contractor/Subcontractor's payroll be classified?

Insurance Company will classify payrolls in accordance with California law under the Workers' Compensation Insurance Rating Bureau regulations, classifications, rates and rating plans. The Monthly Project Site Payroll Form will be used for Contractors/Subcontractors' monthly payroll submissions.

4. Will Program Administrator inspect the job and make recommendations regarding loss control and safety?

Yes. The Program Administrator will conduct periodic loss control surveys on behalf of the Owner. These surveys will focus on evaluating the contractors' efforts to control Workers' Compensation, General Liability, and Builders Risk exposures. These surveys are intended to assist contractors in identifying these exposures and take the appropriate actions to minimize the likelihood of loss.

5. Will there be other people who will make job site inspections?

Yes. The insurance company's Risk Engineer may conduct periodic site inspections to verify compliance with State requirements. State, City and Federal inspectors may also make inspections.

General Liability Insurance for Personal Injury, Bodily Injury and Property Damage Liability Questions

1. What insurance company writes the primary coverage for Personal Injury, Bodily Injury, and Property Damage Liability coverage?

Certain Underwriters at Lloyd's of London

2. Is Completed Operations coverage provided beyond acceptance of the work performed under the Contract?

Yes. The extension for General Liability "completed operations" is for ten (10) years after Notice of Completion is filed by the Owner, or date Occupancy is taken.

10.0 Known Policy Exclusions

Workers' Compensation
Bodily Injury Outside US or Canada
Bodily Injury To Any Member of Flying Crew
Bodily Injury To Person Subject To Federal Workers' Compensation
Bodily Injury To Person Subject To Occupational Disease Laws
Contractual Liability
Employees Knowingly Employed Illegally
Employment Related Practices
Intentional or Aggravated Bodily Injury
Obligations Imposed By Disability Benefits or Any Similar Law
Obligations Imposed By Occupational Disease Laws
Obligations Imposed By Unemployment Compensation Laws
Obligations Imposed By Workers' Compensation Laws
State or Federal Law Violation Fines, Penalties

General Liability
Aircraft, Auto or Watercraft
Asbestos
Medical Payments Coverage
Certain Exclusions to Personal and Advertising Injury Liability
Certified Acts of Terrorism
Communicable Disease
Contractual Liability (Limited Coverage Provided)
Cross Suits – Limited
Cyber and Data
Employers Liability
Employment Related Practices
Expected or Intended Injury
Fungi Or Bacteria
Lead
Certain exclusions for transportation or use of
Mobile Equipment
Nuclear
Personal and Advertising Bodily Injury
Pollution and Hazardous Materials
Prior Continuous, or Progressively Deteriorating Injury or Damage
Professional Liability
Property Damage to the Project During the Course of Construction
Punitive Damages
Residential and Condominium Conversion
Recall of Products, Work Or Impaired Property

Silica or Silica Mixed Dust
Subsidence - Conditional Warranty – So long as Contractor/Subcontractors follows specifications of geotechnical/environmental reports then the exclusion will be waived; if not, exclusion will be fully implemented
Violation of Statutes Governing Collecting, Transmitting Information
Violation of Statutes Governing Email, Fax, Phone Calls
War
Workers Compensation and Similar Laws

Builder's Risk
Asbestos
Certain Offsite Property
Certain Release, Discharge, Escape, or Dispersal of Contaminants or Pollutants
Certified Acts of Terrorism (Optional Coverage)
Cessation of Work
Consequential Loss (except as provided in Delay in Opening Coverage)
Communicable Disease
Contractor's Tools, Machinery, Plans, Equipment
Cost of Making Good (Optional Coverage)
Damage to Existing Property (Optional Coverage)
Damage While Testing Prototype or Used Machinery/Equipment
Damages, Fines, Penalties at Government Agency or Court Order
Disappearance or When Revealed by Inventory Shortage Alone
Earth Movement (Optional Coverage)
Electrical, Magnetic, or Errors Related to Electronic Records
Financial Accounts, Instruments, Stamps, Deeds, Precious Material
Flood (Optional Coverage) (rain and the accumulation of rainwater included in Flood definition)
Foreign Terrorism
Infidelity, Dishonesty, Fraudulent Activity of Insured
Land, Values of Land, Cut, & Fill etc. Prior to Project Commencement
Loss Under Any Manufacturer or Supplier Guarantee/Warranty
Normal Subsidence
Nuclear
Offshore or Barrier Island Property
Property That Stores, Processes, or Handles Radioactive Materials
Rolling Stock, Aircraft, Watercraft
Software Loss, unless results from an Open Peril
Standing Timber, Growing Crops, Animals
Vehicles or Equipment Licensed For Highway Use
War and Military Action

Contractors Pollution Liability
Auto, Aircraft, Vessel Or Rolling Stock
Claims Between Certain Insureds
Contractual Liability

Damage To Property
Fines, Penalties, and Treble Damages
Employment Related Practices
Owned Hazardous Materials Facility
Nuclear
Other Entities
Pre-Existing Conditions
Products
Terrorism
War
Workers Compensation and Similar Laws

EXHIBIT C: Milestone Schedule

Freedom HS Softball Batting Cages Project: MILESTONE SCHEDULE

				2026			2027	
				OCTOBER	NOVEMBER	DECEMBER	JANUARY	FEBRUARY
PRE-CONSTRUCTION	**START**	**END**	**DURATION**					
1st Advertisement	10/23/26	10/23/26	*					
2nd Advertisement	10/30/26	10/30/26	*					
Mandatory Pre-Bid Job Walk**	10/29/26	10/29/26	*					
Last Day for Pre-Bid RFI's/Questions	10/30/26	10/30/26	*					
SEALED BIDS DUE* **	**11/5/26**	**11/5/26**	*					
CONSTRUCTION	**START**	**END**	**DURATION**					
Active On-site Construction	12/7/26	2/5/27	9-weeks					

* = MILESTONE

** = Mandatory Pre-Bid Job Walk: **October 29, 2026 @ 3:30 PM** meet at front of Performing Arts Center at Freedom High School

*** = Bids Due: **November 5, 2026 by 2:00 PM** at LUHSD Maintenance & Operations Building; 19 Oak St. Brentwood, CA 94513

EXHIBIT D: Logistics Plan

Freedom High School - Softball Batting Cages Project

Logistics Plan

KEY

- = Fenced Construction Work Area / Laydown
- = Contractor Parking
- = Temporary Fencing (by GC)
- = Construction Gate (by GC)
- = Temporary Toilet (by GC)
- = Wash Station (by GC)
- = Contractor Vehicle Path of Travel
- = Existing Fence - to remain

NOTES

1. Contractor shall furnish, install and maintain temporary fencing with screening around the work areas shown.
2. Gate shall remain closed and locked when the site is unattended. No contractor access through the campus.
3. Contractor vehicles and deliveries use the path of travel shown; no vehicles on fields, walkways or fire lanes.
4. CONTRACTORS SHALL NOT PARK IN THE EXISTING PARKING LOT. All contractor and subcontractor vehicles shall park inside the fenced area in the contractor parking shown.
5. Temporary toilet and wash station shall be kept inside the fenced area.

EXHIBIT D | LUHSD Bid No. 26-27-04 | DSA App. No. 01-123111 | Not to scale | Aerial: Google, 2026

ATTACHMENT 3

SPEC SECTION 11 68 33.33
TBPR - TURFBASE PITCHING RUBBER
3-Part Specification and Cut Sheet

TBPR - TurfBase® Pitching Rubber

SECTION 11 68 33 Athletic Field Equipment
SECTION 11 68 33.33 Baseball Field Equipment
(Formally Section 11480)

PART 1 GENERAL

1.01 WORK INCLUDED

A. Provide all equipment and materials, and do all work necessary to furnish and install the athletic equipment, as indicated on the drawings and as specified herein. Athletic equipment shall include, but not be limited to:

1. TBPR - TurfBase® Pitching Rubber

1.02 RELATED WORK

A. Examine contract documents for requirements that affect work of this section. Other specification divisions and sections that directly relate to the work of this section include, but are not limited to:

1. Division 03 – Concrete; Sections: Cast-in-Place Concrete
2. Division 31 – Earthwork; Sections: Excavation and Backfill and Establishment of Sub-Grade Elevations
3. Division 32 – Exterior Improvements; Sections: Athletic and Recreational Surfacing, Concrete and Asphalt

1.03 REFERENCES

A. Comply with applicable requirements of the following standards. Where these standards conflict with other specified requirements, the most restrictive requirements shall govern.

1. National Federation of State High School Associations (NFHS)
2. National Collegiate Athletic Association (NCAA)
3. International Association of Athletics Federations (IAAF)
4. American Sports Builders Association (ASBA)
5. Manufacturers Data and Recommended Installation Requirements

1.04 SUBMITTALS

A. Manufacturers Product Data

1. Provide manufacturers product data prior to actual field installation work, for Architects or Owners representatives

review.

B. Shop Drawings

1. Provide drawings of the manufacturers recommended installation and foundation requirements prior to actual field installation work, for Architects or Owners representatives review.

1.05 QUALITY ASSURANCE

A. Manufacturers warranties shall pass to the Owner and certification made that the product materials meet all applicable grade trademarks or conform to industry standards and inspection requirements.

1.06 PRODUCT DELIVERY AND STORAGE

A. Materials delivered to the site shall be examined for damage or defects in shipping. Any defects shall be noted and reported to the Owners representative. Replacements, if necessary, shall be immediately re-ordered, so as to minimize any conflict with the construction schedule. Sound materials shall be stored above ground under protective cover or indoors so as to provide proper protection.

PART 2 PRODUCTS

2.01 TBPR - TurfBase® Pitching Rubber

A. BASE: TBPR - TurfBase® Pitching Rubber as Manufactured or Supplied by:

Sportsfield Specialties, Inc.
P.O. Box 231
41155 State Highway 10
Delhi, NY 13753
p. 888-975-3343
www.sportsfieldspecialties.com

B. COMPONENTS:

1. TBPR - TurfBase® Pitching Rubber
   a. Durable Rubber Mesh Reinforced Construction
   b. Specifically Designed Molded Pegs Embed in Synthetic Turf Infill Material Limiting Horizontal Movement in Synthetic Infill Turf Applications

c. Size: 6” x 24”
d. Color: White/Off-White

PART 3 EXECUTION

3.01 INSTALLATION OF EQUIPMENT

A. All TurfBase® products shall be installed as recommended per manufacturer's written instructions and as indicated on the drawings.

END OF SECTION

SPORTSFIELD SPECIALTIES
WWW.SPORTSFIELD.COM

Excellence from Design to Installation
41155 State Highway 10, PO Box 231, Delhi, NY 13753 CALL: 888-975-3343 FAX: 607-746-8481

United States Patent #8,337,340, Issued December 25, 2012

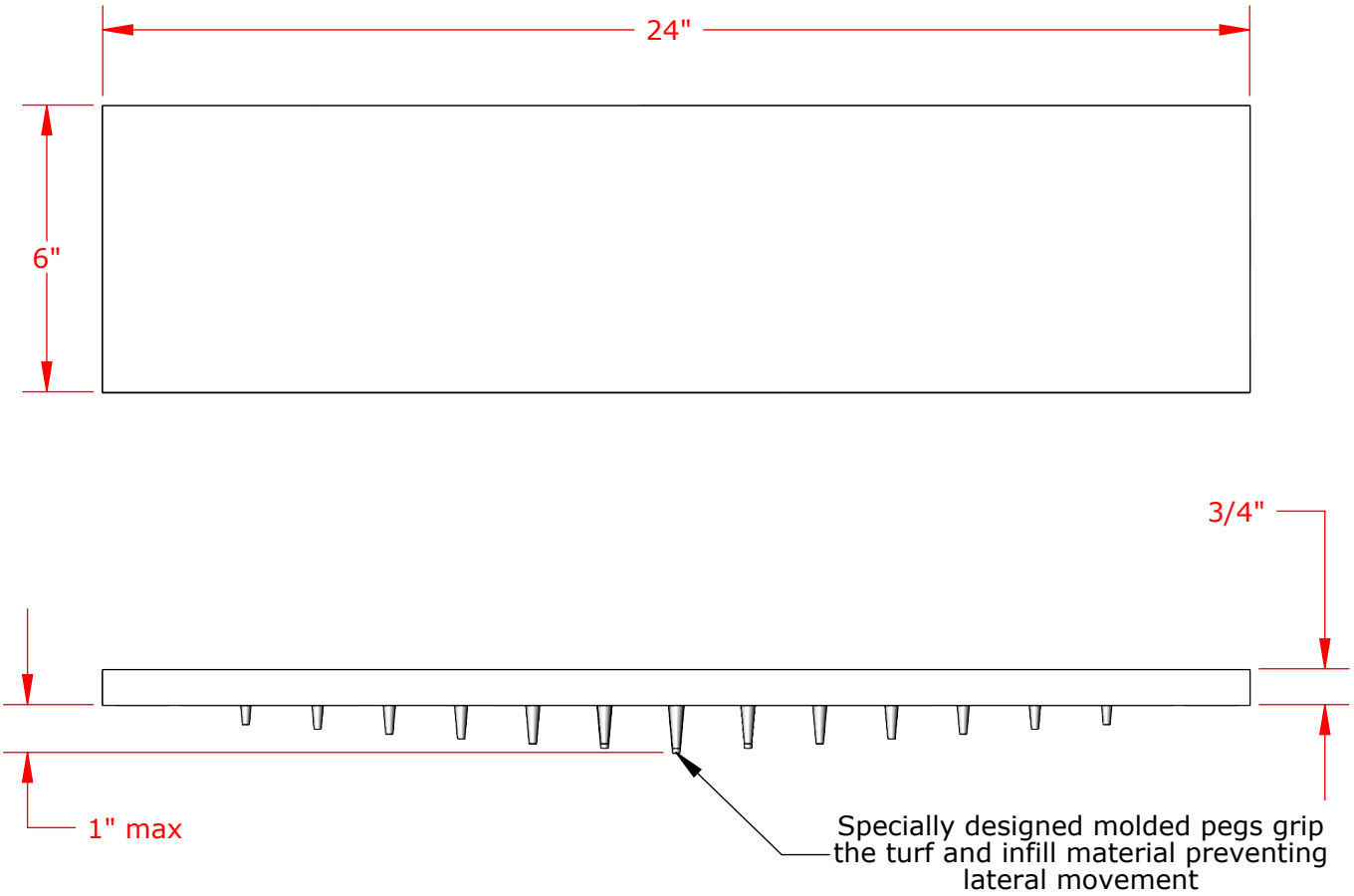

* Designed specifically for synthetic turf applications
* No ground anchor installation is necessary
* Durable all rubber mesh reinforced construction
* Official size - 6" x 24"

PROPRIETARY AND CONFIDENTIAL

THE INFORMATION CONTAINED IN THIS DRAWING IS THE SOLE PROPERTY OF SPORTSFIELD SPECIALTIES INC. ANY REPRODUCTION IN PART OR AS A WHOLE WITHOUT THE WRITTEN PERMISSION OF SPORTSFIELD SPECIALTIES INC. IS PROHIBITED.

TBPR - TurfBase® Pitching Rubber

Not To Scale

Sportsfield Specialties Inc 07132026

ATTACHMENT 4

SPEC SECTION 11 68 33.33
TBHP - TURFBASE HOME PLATE
3-Part Specification and Cut Sheet

TBHP - TurfBase® Home Plate

SECTION 11 68 33 Athletic Field Equipment
SECTION 11 68 33.33 Baseball Field Equipment
(Formally Section 11480)

PART 1 GENERAL

1.01 WORK INCLUDED

A. Provide all equipment and materials, and do all work necessary to furnish and install the athletic equipment, as indicated on the drawings and as specified herein. Athletic equipment shall include, but not be limited to:

1. TBHP - TurfBase® Home Plate

1.02 RELATED WORK

A. Examine contract documents for requirements that affect work of this section. Other specification divisions and sections that directly relate to the work of this section include, but are not limited to:

1. Division 03 – Concrete; Sections: Cast-in-Place Concrete
2. Division 31 – Earthwork; Sections: Excavation and Backfill and Establishment of Sub-Grade Elevations
3. Division 32 – Exterior Improvements; Sections: Athletic and Recreational Surfacing, Concrete and Asphalt

1.03 REFERENCES

A. Comply with applicable requirements of the following standards. Where these standards conflict with other specified requirements, the most restrictive requirements shall govern.

1. National Federation of State High School Associations (NFHS)
2. National Collegiate Athletic Association (NCAA)
3. International Association of Athletics Federations (IAAF)
4. American Sports Builders Association (ASBA)
5. Manufacturers Data and Recommended Installation Requirements

1.04 SUBMITTALS

A. Manufacturers Product Data

1. Provide manufacturers product data prior to actual field installation work, for Architects or Owners representatives

review.

B. Shop Drawings

1. Provide drawings of the manufacturers recommended installation and foundation requirements prior to actual field installation work, for Architects or Owners representatives review.

1.05 QUALITY ASSURANCE

A. Manufacturers warranties shall pass to the Owner and certification made that the product materials meet all applicable grade trademarks or conform to industry standards and inspection requirements.

1.06 PRODUCT DELIVERY AND STORAGE

A. Materials delivered to the site shall be examined for damage or defects in shipping. Any defects shall be noted and reported to the Owners representative. Replacements, if necessary, shall be immediately re-ordered, so as to minimize any conflict with the construction schedule. Sound materials shall be stored above ground under protective cover or indoors so as to provide proper protection.

PART 2 PRODUCTS

2.01 TBHP - TurfBase® Home Plate

A. BASE: TBHP - TurfBase® Home Plate as Manufactured or Supplied by:

Sportsfield Specialties, Inc.
P.O. Box 231
41155 State Highway 10
Delhi, NY 13753
p. 888-975-3343
www.sportsfieldspecialties.com

B. COMPONENTS:

1. TBHP - TurfBase® Home Plate
   a. Durable Rubber Mesh Reinforced Construction
   b. Specifically Designed Molded Pegs Embed in Synthetic Turf Infill Material Preventing Horizontal Movement with No Ground Anchor Necessary in Synthetic Infill Turf Applications

c. Official Size and Shape
d. Color: White/Off-White

PART 3 EXECUTION

3.01 INSTALLATION OF EQUIPMENT

A. All TurfBase® products shall be installed as recommended per manufacturer's written instructions and as indicated on the drawings.

END OF SECTION

SPORTSFIELD SPECIALTIES
WWW.SPORTSFIELD.COM

Excellence from Design to Installation
41155 State Highway 10, PO Box 231, Delhi, NY 13753 CALL: 888-975-3343 FAX: 607-746-8481

United States Patent #8,337,340, Issued December 25, 2012

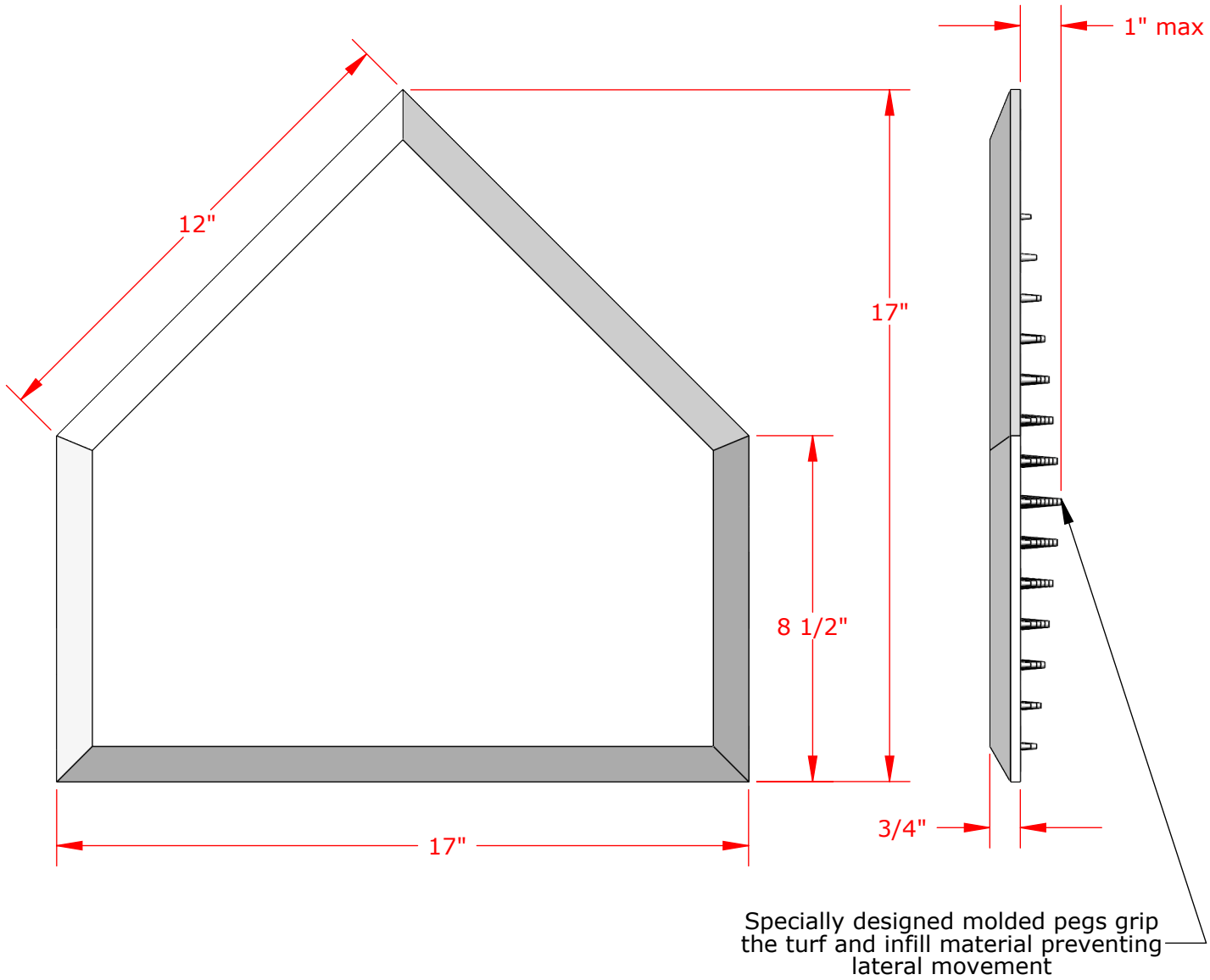

* Designed specifically for synthetic turf applications
* No ground anchor installation is necessary
* Durable all rubber mesh reinforced construction
* Official size

PROPRIETARY AND CONFIDENTIAL

THE INFORMATION CONTAINED IN THIS DRAWING IS THE SOLE PROPERTY OF SPORTSFIELD SPECIALTIES INC. ANY REPRODUCTION IN PART OR AS A WHOLE WITHOUT THE WRITTEN PERMISSION OF SPORTSFIELD SPECIALTIES INC. IS PROHIBITED.

TBHP - TurfBase® Home Plate

Not To Scale

Sportsfield Specialties Inc 07132026

ATTACHMENT 5

SPEC SECTION 32 15 40
DECOMPOSED GRANITE SURFACING

SECTION 32 15 40
DECOMPOSED GRANITE SURFACING

PART 1 - GENERAL

1.01 SUMMARY

A. Section includes stabilized decomposed granite (DG) surfacing at the two bullpens and at the home plate end of the batting cages, as shown on Sheet A103, including subgrade preparation, DG, stabilizer, placement, and compaction.

B. Related Sections:

1. Section 03 30 00 - Cast-in-Place Concrete (concrete mow strip, Sheet A103 and Detail 5/A501).
2. Section 11 68 33.33 - Baseball Field Equipment (home plate and pitching rubber).
3. Section 32 18 13 - Synthetic Grass Surfacing.
4. Section 32 31 13 - Chain Link Fences, Gates, and Backstops.

1.02 REFERENCES

A. ASTM C117 - Standard Test Method for Materials Finer than 75-um (No. 200) Sieve in Mineral Aggregates by Washing.

B. ASTM C136 - Standard Test Method for Sieve Analysis of Fine and Coarse Aggregates.

C. ASTM D1557 - Standard Test Methods for Laboratory Compaction Characteristics of Soil Using Modified Effort.

D. ASTM D4318 - Standard Test Methods for Liquid Limit, Plastic Limit, and Plasticity Index of Soils.

E. ASTM D6938 - Standard Test Methods for In-Place Density and Water Content of Soil and Soil-Aggregate by Nuclear Methods.

F. California Building Code (CBC), Chapter 11B, Section 11B-302 - Floor or Ground Surfaces.

1.03 SUBMITTALS

A. Product Data: DG source (quarry or supplier), gradation, and color range; stabilizer manufacturer's product data, Safety Data Sheet, mixing ratio, and application instructions.

B. Samples: One-quart sample of the proposed DG, and a stabilized sample at least 6 inches square by 1 inch thick prepared at the proposed mix ratio, for color and texture approval by the Architect.

C. Test Reports: Sieve analysis (ASTM C136), percent passing the No. 200 sieve (ASTM C117), and plasticity index (ASTM D4318) of the proposed DG, from an independent testing laboratory, dated within 90 days of submittal.

D. Maintenance Data: Manufacturer's written maintenance and repair instructions for stabilized DG.

1.04 QUALITY ASSURANCE

A. Installer Qualifications: Firm regularly engaged in installation of stabilized decomposed granite surfacing, with not less than three (3) installations of similar scope within the previous five (5) years.

B. Mockup: Install a mockup not less than 10 feet by 10 feet, at a location approved by the Architect, to establish color, texture, thickness, and finish. Approved mockup may remain as part of the Work.

C. Accessibility: DG surfaces that form part of an accessible route or clear floor space shall be firm, stable, and slip-resistant in accordance with CBC 11B-302.

1.05 DELIVERY, STORAGE, AND HANDLING

A. Deliver and store DG and stabilizer so as to prevent contamination, segregation, and wetting by rain or runoff. Store stabilizer in original, sealed containers.

1.06 PROJECT CONDITIONS

A. Do not place DG on frozen or saturated subgrade, during rain, or when rain is forecast within 24 hours. Place stabilized DG only within the temperature range recommended by the stabilizer manufacturer.

B. Do not apply herbicides or other pesticides without the Owner's written approval.

PART 2 - PRODUCTS

2.01 MANUFACTURERS

A. Subject to compliance with requirements, provide stabilizer by one of the following, or approved equal in accordance with the Instructions to Bidders:

1. Stabilizer Solutions, Inc. - "Stabilizer" - or approved equal.

2.02 DECOMPOSED GRANITE

A. Material: Natural decomposed granite, crushed and screened, from a single source, free of clay lumps, organic matter, trash, and other deleterious material.

B. Gradation: Maximum particle size 3/8 inch (100 percent passing the 3/8-inch sieve), well graded to fines. Material passing the No. 200 sieve: not less than 10 percent nor more than 20 percent (ASTM C117). Plasticity index not greater than 6 (ASTM D4318).

C. Color: Golden tan, as selected by the Architect from the Contractor's submitted samples. Use a single color and single source throughout.

2.03 STABILIZER

A. Non-toxic, natural organic or polymer-based binder formulated for stabilized decomposed granite, compatible with the selected DG, and approved by the manufacturer for athletic and pedestrian use. Mix at the ratio recommended by the manufacturer for the selected DG.

2.04 ACCESSORIES

A. Concrete Mow Strip: As shown on Sheet A103 and Detail 5/A501, in accordance with Section 03 30 00.

2.05 MIXES

A. Pre-blend DG and stabilizer dry, uniformly, at the approved ratio, using a pugmill or other method approved by the Architect. Do not mix by hand in place.

PART 3 - EXECUTION

3.01 EXAMINATION

A. Verify that demolition of existing concrete and synthetic turf at the DG areas is complete, and that concrete mow strips, fence footings, home plate, and pitching rubber are in place, to the lines and grades shown on the Drawings.

B. Verify that the subgrade is firm, compacted, free of standing water, and graded to drain. Notify the Architect of unsatisfactory conditions before proceeding.

3.02 PREPARATION

A. Scarify the subgrade to a depth of 6 inches, moisture condition, and compact to not less than 90 percent relative compaction (ASTM D1557), or as required by the Project geotechnical report, whichever is greater.

B. Grade the subgrade parallel to the finished surface to provide a minimum 1 percent and maximum 2 percent slope away from fences, equipment, and the batting cages, unless otherwise shown on the Drawings. Provide positive drainage; do not allow water to pond.

3.03 INSTALLATION

A. Place the DG mix in lifts not more than 2 inches thick, to a total compacted thickness of not less than 3 inches, unless a greater thickness is shown on the Drawings.

B. Moisten each lift to optimum moisture content. Compact each lift with a vibratory plate compactor or roller until firm and unyielding, and no visible displacement under foot traffic occurs.

C. Finish the surface flush with the top of adjacent concrete mow strips, and not more than 1/4 inch above or below the top of home plate and pitching rubber. Surface tolerance: 1/4 inch in 10 feet.

D. Hand-compact at fence posts, mow strips, home plate, and pitching rubber. Do not damage or displace installed equipment or the turf base at turf transitions.

E. Cure and protect the surface as recommended by the stabilizer manufacturer. Prohibit traffic and prevent water from standing on the surface during the curing period.

3.04 FIELD QUALITY CONTROL

A. Compaction testing (ASTM D6938) and thickness verification shall be performed as directed by the Project Inspector of Record and the Owner's testing agency. Remove and replace areas that do not meet the specified compaction, thickness, or tolerance.

B. The Architect will review the finished surface for color, texture, uniformity, and drainage before Owner acceptance. Correct ruts, loose areas, low spots, and ponding at no cost to the Owner.

3.05 CLEANING AND PROTECTION

A. Remove excess material, debris, and stabilizer residue from adjacent concrete, turf, fences, and equipment. Protect the finished surface from damage by other trades until Substantial Completion.

END OF SECTION 32 15 40

ATTACHMENT 6

PROJECT MANUAL TABLE OF CONTENTS (REVISED)
Pages 7 and 8, revised by Addendum #1

DIVISION 09

09 91 00 PAINTING

DIVISION 11

11 68 33.33 BASEBALL FIELD EQUIPMENT

DIVISION 31

DIVISION 32

32 15 40 DECOMPOSED GRANITE SURFACING

32 18 13 SYNTHETIC GRASS SURFACING

32 31 13 CHAINLINK FENCES, GATES, AND BACKSTOPS