DODGE COUNTY

REQUEST FOR BIDS

Update HVAC Controls
Highway, Dodge County WI

RFB # 30 2026-06 - REBID

Issued Date: October 22, 2026

RFB Opening
November 16, 2026 at 11:00 am

Administration Building
Conference Room 1A
127 E Oak St.
Juneau, WI 53039

Submit Sealed RFB's To:

Dodge County Clerk's Office
127 E Oak St.
Juneau, WI 53039
920-386-3600

Office Hours: Monday - Friday - 8:00 am - 4:30 pm

DODGE COUNTY FINANCE DEPARTMENT
Purchasing Office
127 East Oak Street, Juneau, WI 53039
(920)386-4224
Email: tsteinbach@co.dodge.wi.us

LEGAL NOTICE

The Dodge County Highway Department is accepting bids to update the HVAC controls for the Highway Front office and the VSB Office Area located at Highway Shop, 211 E Center St, Juneau, WI. A Mandatory pre-bid site visit is scheduled for November 2, 2026 at 9:00 am. Specifications are available on line at Dodge County's website and DemandStar at: www.demandstar.com

All Contractors are responsible for addendums. Bids are to be sent to the Dodge County Clerk's Office 127 E Oak St., Juneau, WI 53039 no later than 11:00 am on November 16, 2026. Submit in a sealed envelope marked "RFB # 30 2026-06 - REBID - Update HVAC Controls". After the official bid closing time, the bids will be opened and read aloud. Late receipts, e-mails, and facsimiles will not be accepted.

Dodge County encourages the participation of minority, women-owned and disadvantaged business enterprises. Dodge County reserves the right to waive any informalities or technicalities and to reject any and all bids or parts thereof deemed to be unsatisfactory or not in the County's best interest. Furthermore, Dodge County reserves the right to cancel any order or contract for failure of the successful Contractor to comply with the terms, conditions and specifications of the request and/or contract. Dodge County reserves the right to award this request to the Contractor whose bid is overall the most advantageous to the County in the County's sole determination.

Contact the Purchasing office at (920) 386-4224 if assistance is required.

Published by Authority of
Highway Department
By Trista Steinbach
Dodge County Purchasing Agent

Publish: October 22, 2026 & October 29, 2026.

TABLE OF CONTENTS

RFB PROJECT DETAILS 4

1. **Intent** 4
2. **RFB Packets and Addendums** 4
3. **RFB Tentative Project Timeline** 4
4. **RFB Mandatory Pre-Bid Site Visit: November 2, 2026, at 9:00 am** 4
5. **RFB Questions Due: November 6, 2026, by 10:00 am** 4
6. **RFB Final Addendum Issued Date: November 9, 2026, by 3:00 pm** 5
7. **RFB Due Date & Delivery Address Details: November 16, 2026 by 11:00 am** 5
8. **RFB Selection Criteria** 5
9. **Award Notification** 6
10. **RFB Format & Submission Requirement** 6
11. **Bond Requirements for this Project** 6
12. **Insurance Requirements** 6
13. **General RFB Information** 7
14. **RFB Attachments** 9

ATTACHHMENT A Scope of Work / Specifications / Plans 10

ATTACHMENT B RFB COST SHEET 17

ATTACHMENT C Statement of Acknowledgment 18

ATTACHMENT D Addendum Acknowledgement 19

ATTACHMENT E Contract Requirement 20

RFB PROJECT DETAILS

1. Intent

It is the intent of Dodge County to contract with a contractor to update the HVAC controls for the Highway DepartmentFront office and the VSB Office Area located at Highway Shop, 211 E Center St, Juneau, WI.

2. RFB Packets and Addendums

RFB packet, updates and addendums are available on the Dodge County Request for Proposals/Bids website,. and may also be obtained on DemandStar.

It is the Contractor's responsibility to view the RFB document and check the website for any updates and addenda prior to submitting a bid for this request.

Failure by the bidder to acknowledge all addendums issued for this project may result in the bid being considered non-responsive, and the bid may be automatically rejected.

3. RFB Tentative Project Timeline

	Date	Time (CT)
RFB Issued	October 22, 2026	
Legal Notice Advertised	October 22, 2026 & October 29, 2026	
Mandatory Pre-Bid Site Visit	November 2, 2026	9:00 am
RFB Questions Due	November 6, 2026	10:00 am
RFB Final Addendum Issued	November 9, 2026	3:00 pm
RFB Due Date & Public Opening	November 16, 2026	11:00 am
Review and Recommendation	November 2026	

4. RFB Mandatory Pre-Bid Site Visit: November 2, 2026, at 9:00 am

Site visits are based on the date and time listed in the RFB Tentative Project Timeline above	
Contractors meet at:	Highway Shop, 211 E Center St, Juneau, WI
Site Visit conducted by:	Adrian Woods
Site Visit contact phone number for questions"	920-386-3658

5. RFB Questions Due: November 6, 2026, by 10:00 am

Questions- All questions related to this RFB must be in writing and received by the Dodge County Purchasing Office at least five (5) business days prior to the bid due date.

- Questions shall be directed to the Purchasing Agent via email to: tsteinbach@co.dodge.wi.us
- Questions MUST be clearly marked in the subject line: "**Questions for RFB # 30 2026-06 - REBID"**

MAILED, PHONE CALL AND FAXED QUESTIONS WILL NOT BE ACCEPTED. QUESTIONS RECEIVED AFTER THIS TIME WILL NOT BE ANSWERED.

6. RFB Final Addendum Issued Date: November 9, 2026, by 3:00 pm

Answers: If any questions are received, answers to all written questions will be issued in the form of an addendum.

- Answers will be published on the Dodge County website
- AND on the DemandStar website at www.demandstar.com

It is the responsibility of all interested Contractors to access the website(s) for addenda prior to submitting your bid. Oral or other interpretations or clarifications will be without legal effect. Calls for assistance with the website can be made to (920) 386-4224.

7. RFB Due Date & Delivery Address Details: November 16, 2026 by 11:00 am

Bids must be received in a sealed envelope or container no later than the time set above. Bids are due to the Dodge County Clerk's Office, 127 E Oak St., Juneau, WI 53039. Bids can be submitted by: Hand Delivery, DHL, FedEX, Mail, UPS, and USPS. Late bids will not be accepted.

The following information must be clearly marked on the front of the envelope/shipping package:

Name & Address of Bidder
Due Date of Bid
Bid Number & Title

The following sample mailing label is provided here for your convenience:

Sample Mailing Label

From:
_____
_____
_____

To: Dodge County Clerk's Office
127 E Oak St.
Juneau, WI 53039

SEALED BID
RFB # 30 2026-06 - REBID– Update HVAC Controls
Due Date: November 16, 2026 at 11:00 am

- No faxed or email bids are accepted.
- There is not an option to submit bids electronically.
- No bid may be withdrawn for ninety (90) days.
- Pricing is to remain firm for a minimum of ninety (90) calendar days following the bid opening date unless the Contractor, upon the request of the County, agrees to an extension.
- A public Bid Opening will be held immediately following the due date and time

8. RFB Selection Criteria

Selection will be based on qualified, responsible, and responsive bidder with lowest price.

9. Award Notification

Intent to Award or Thank you letters will be sent via email to all Contractors submitting responses.

10. RFB Format & Submission Requirement

Any deviation from these requirements may result in the bid being considered non-responsive, thus eliminating the Contractor from consideration. The Bid Submission must include the following completed attachments*: Failure to provide all attachments listed below may result in the automatic rejection of the bid.*

- **Attachment A – Specifications / Drawings**
- **Attachment B – RFB Cost Sheet**
- **Attachment C – Statement of Acknowledgement**
- **Attachment D - Addendum Acknowledgement**
  All addendums issued must be acknowledged on the form. If no addendum is issued, that must be stated on the form and returned with the bid package.
- **Attachment E – Contract Requirement**
- **Bid Bond**. If required in Section 11 below, include the Bid Bond (in the form of a Cashier's Check or Certified Check) with your bid submittal. Failure to provide will result in the automatic rejection of the bid.
- Submit a list of any consultants or subcontractors that may be used to complete this project.

11. Bond Requirements for this Project

Failure to submit a required Bid Bond concurrent with your bid will result in the automatic rejection of your bid. Performance and Payment Bonds may be submitted after the Contract is awarded and signed.

- **Bid Bond**
  A bid bond must be submitted with your bid. The bid bond must be in the form of a Cashier's Check or Certified Check in the amount of five percent (5%) of the total bid amount. Cashier's Check or Certified Check will be returned after the project is awarded.

- **Performance and Payment Bond**
  All projects estimated to cost over $50,000 will require a 100% Performance and Payment Bond to be obtained by the selected Contractor and provided to Dodge County prior to commencement of work.

12. Insurance Requirements

Minimum Scope and Limits

A. Architects, Engineers, Other professionals – Errors & Omissions (Professional Liability) coverage, with a minimum limit of $1,000,000 per claim, $2,000,000 annual aggregate. This insurance is to be maintained for at least two years after completion of the project. If the Contractor changes insurance carriers and this policy is provided on a "claims made" basis, the Contractor will secure the appropriate coverage extension to provide coverage to the project for a period of at least two years following the completion of the project.

B. Commercial General Liability coverage with limits of no less than the following:

1.	General aggregate limit per project (Other than Products-Completed Operations)	$2,000,000
2.	Products-Completed Operations Aggregate per project	$1,000,000
3.	Personal and Advertising Injury Limit	$1,000,000
4.	Each Occurrence Limit	$1,000,000
5.	Fire Damage Limit-any one Fire	$ 50,000
6.	Medical Expense Limit-any one Person	$ 10,000.

C. Automobile Liability coverage with minimum limits of $1,000,000 combined single limit per accident for bodily injury and property damage, provided on a Symbol 1- Any Auto basis.

D. Worker's Compensation and Employers Liability Insurance with sufficient limits to meet underlying Umbrella Liability Insurance requirements.

E. Umbrella Liability providing coverage at least as broad as the underlying General Liability, Automobile Liability and Employers Liability coverages, with a minimum limit of $2,000,000 each occurrence and $2,000,000 annual aggregate, and a maximum self-retention of $10,000.

Other Requirements

A. Acceptability of Insurers. Insurance is to be placed with insurers who have a Best's Insurance Reports rating of no less than A and a Financial Size Category of no less than a Class VI, authorized as an admitted insurance company in the State of Wisconsin.

B. Certificates of Insurance acceptable to Dodge County shall be submitted prior to commencement of the work. Certificates shall contain a provision that coverage afforded under the policies will not be cancelled until at least 30 days' prior written notice has been given to Dodge County.

C. Dodge County, Dodge County's elected and appointed officials, and Dodge County employees shall be named as additional insureds on all liability policies for liability arising out of project work. Please provide a copy of this endorsement with your certificate of insurance.

13. General RFB Information

A. Dodge County requires a high level of service from any Contractor who is looking to do business with the County. Quality, service and price are all critical factors that Dodge County considers when doing business and in continuing business with Contractors. This is especially important when it comes to the requirements of this request. Dissatisfaction due to product or performance may result in Dodge County discontinuing service with a Contractor.

B. Dodge County is a tax-exempt municipality under Section 77.54(9a) (b), Wis. Stats.

C. Successful Contractor(s) shall provide a certificate of insurance, including naming Dodge County, its officers, elected officials and employees as Additional Insureds, upon bid award.

D. All bids shall be binding for ninety (90) calendar days following the bid opening date unless the Contractor(s), upon the request of the County, agrees to an extension.

E. Payment for services will be made to successful Contractor(s) contingent upon County's acceptance and approval of all work done and/or products provided, or services rendered. Acceptance as herein means acceptance by the County of all work performed or products provided and services rendered, after the department's authorized agent has found it to be in compliance with the specification requirement. Fuel surcharges or surcharges of any kind will not be allowed.

F. Contractors may withdraw their bid at any time before the bid due date and time by written request for withdrawal to the Purchasing Agent and by presenting proper identification upon request. **Faxed and emailed bids will be rejected. Late bids will not be accepted.**

G. Dodge County's Standard Terms and Conditions available on Dodge County's website are applicable to this request and are hereby made a part of it.

H. RFB packet, updates and addenda are available on the Dodge County's website, and may also be obtained on DemandStar. It is the Contractor's responsibility to view the RFB document, check for updates, and to retrieve any addenda prior to submitting a bid for this request. Failure to do so in no way obligates the County to issue addendum or other information concerning this request to the Contractor.

I. All questions resulting in further clarification or modification to this (RFB) document will be handled by written addenda. Questions shall be directed to the Purchasing Agent via email to tsteinbach@co.dodge.wi.us. Questions must be asked at least five (5) business days prior to the bid due date. Questions received after this time may not be answered. Any changes as a result of issues raised will be made by written addenda and posted on the Dodge County website and may also be obtained on DemandStar. It is the Contractor's responsibility to check the website for addenda prior to submitting your bid. Oral and other interpretations or clarifications will be without legal effect.

J. Dodge County assumes no responsibility or liability for any error or omission in any part of this RFB or resulting design. Prior to the deadline for questions, a Contractor shall notify Dodge County of any error, omission, inconsistency or other factor which requires clarification that is discovered while reviewing the documents or preparing a bid. Such notification shall be made in writing to Dodge County's Purchasing Agent.

K. Contractors responding to this request shall include with the bid a proposed contract covering all the terms, conditions and specifications for the performance of all work for this request. Proposed contract shall incorporate at a minimum the County's terms and conditions and the contract requirements contained herein.

L. Bidders shall list any consultants or subcontractors that may be used to complete this project.

M. No reimbursement will be made by the County for any cost incurred in preparing responses to this solicitation, or for cost incurred before a formal notice to proceed is issued if a contract is awarded.

N. Dodge County shall be the owners of any, and all of the reports, plans, specifications and documents resulting from this RFB, and the Contractor shall provide both digital and hard copies of all reports, plans, and documents as indicated in this RFB to Owner in a format usable to the County. Awarded Contractor(s) shall also waive any rights to copyright protection so Owner may reproduce, distribute, and use all reports, plans, specifications, and documents as it so chooses.

O. Any bid/response and any, and all supporting materials submitted in conjunction with this request will become a public record, subject to public inspection. Records will not be released via open records request until the contract for the project is signed. Records of this procurement will be held in the Purchasing Agent's office along with the requesting Department.

P. Confidentiality and Security – This document or any portion thereof may not be used for any purpose other than the submission of bids. The successful Contractor must agree to maintain security standards consistent with the confidentiality and security policies of Dodge County and any applicable state or federal laws or regulations. These include strict control of access to secure areas, sensitive data and maintaining confidentiality of information gained while carrying out their contractual obligations. The successful Contractor will be required to ensure that all Contractor's personnel providing services to the County which require access to secure and confidential Dodge County information or facilities, meet the criteria for personal security clearance prescribed by Dodge County. Dodge County reserves the right to deny access to any individual that is not fully compliant with security criteria without disruption to timeline or adjustment to project cost.

Q. Dodge County reserves the right to require background checks for any employee or subcontractor employee involved in this project from the awarded Contractor(s).

R. Unpublished information pertaining to Dodge County, or its employees obtained by the Contractor as a result of participation in this RFB or resulting contract is confidential and must not be disclosed without written authorization from Dodge County Corporation Counsel or pursuant to a court order.

S. INDEMNIFICATION Dodge County requires any contract or agreement to contain an indemnification clause in which Contractor holds harmless Dodge County, its officers, elected officials and employees harmless from and against any and all claims arising from contracts between the Contractor and third parties made to effectuate the purposes of this RFB. Dodge County will not agree to mutual indemnification or to indemnify Contractor.

T. NON-COLLUSIVE STATEMENT Each Contractor, by submitting a response, certifies that it is not a party to any collusive action with Dodge County personnel and/or Contractors. Each Contractor also certifies that it is not a party to any collusive action with any other party submitting a bid in response to this solicitation.

U. Dodge County reserves the right to reject any or all bids or parts thereof, to waive any technicality in any bid and accept any bid deemed to be the most advantageous to the County**.** It is possible that multiple awards may be made through this RFB process.

V. This request and possible resulting contract shall be interpreted under the laws of the State of Wisconsin. Any disputes or claims that arise under this contract shall be litigated in the Circuit Court of Dodge County, WI.

14. RFB Attachments

A. Specifications / Drawings
B. RFB Cost Sheet
C. Statement of Acknowledgement
D. Addendum Acknowledgement
E. Contract Requirement

ATTACHHMENT A
Scope of Work / Specifications / Plans

Replacement of existing HVAC Control system to Carrier i-VU BACNET Controls (or similar). Also to install all new Carrier BACnet Controls (or similar) and Sensors to be compatible with a new Carrier i-VU (or similar) front end.

The awarded contractor will have access to the Highway shop during office hours which are Monday through Friday from 7 am – 3 pm. Access cards may be supplied to the contractor o allow access from 6 am until 5 pm Monday trough Friday if requested.

Dodge County will supply lifts for the contractor's use during the project.

Part 1: AHU-1, Boiler Plant, and VAV Zones

AHU-1

- Demo Existing Controls for AHU-1
- Add new Controller for Existing AHU-1.
- Furnish and Install New Discharge Air, Return Air Temp Sensor.
- Pull new Communications Bus from Closest VAV to AHU-1.
- Program New AHU-1 Controller.
- Remove Existing Touch Screen Controller
- Start-Up and Sequencing of New AHU Controller.
- Provide AHU-1 Graphics to Front End.

AHU-1 VAV Zone Controllers

- Demo Existing VAV Zone Controllers.
- Pull New Communication Network to New VAV Controller.
- Pull New 18/4 Zone Temp Sensor Cable to Each VAV Zone Stat.
- Demo Existing T-55 Zone Sensors.
- Install (8) Carrier ZS2PL (or similar) Zone Sensors.
- Install (8) Discharge Air Temp Sensors.
- Install (8) Carrier i-VU BACnet (or similar) Zone Controllers.
- Remove (8) Floating Point Hot Water Actuators.
- Install (8) New Honeywell (or similar) 2-10 VDC VAV Hot Water Actuators.
- Re-Program and Commission Finned Tube Valves to Function in Similar Fashion to Other Branches. These are located in the Main Entryway and the Back Hallway.
- Start-up and Commissioning of New Zone Controllers.

Boiler Plant and Devices Controls-

- Remove Existing CCN Control Board.
- Furnish and Install new Carrier Controller for Boiler Controls.
- Pull BACnet Communication wires to Boiler Room for New Controller.
- Program Boiler Loop Pumps for Weekly Rotation.
- Start/Stop Relay to Each Boiler Loop Pump.

- Status Relay to Each Boiler Pump for Monitoring, Rotation, and Alarming.
- Start/Stop Relay to Each Boiler.
- Boiler Status/Alarm Relay to Each Boiler for Monitoring, Rotation, and Alarming.
- Program and Sequencing of Boilers and Boiler Loop Pumps.
- Provide Graphics for Boiler Plant and Pumps and add to i-VU Front End.
- Add Boiler Room Space Temp to Graphics
- Commission and Verify Operation Boiler Plant Programming

Part 2: Truck Storage Building and Office

Truck Storage Building and Office RTU-1

- Demo Existing Controls for RTU-1
- Add new Controller for Existing RTU-1.
- Furnish and Install New Discharge Air, Return Air Temp Sensor.
- Pull new Communications Bus from Closest Controller to RTU-1.
- Program New RTU-1 Controller.
- Remove Existing Touch Screen Controller
- Start-Up and Sequencing of New AHU Controller.
- Provide RTU-1 Graphics to Front End.

Truck Storage Building and Office MAU/GAS 1,2

- Demo Existing Controls for MAU
- Add New Controller for Existing MAU-1.
- Furnish and Install New Discharge Air, Return Air Temp Sensor.
- Pull new Communications Bus from Closest Controller to MAU-1.
- Program New MAU-1 Controller.
- Start-Up and Sequencing of New MAU-1 Controller.
- Provide MAU-1 Graphics to Front End.
- Provide Controller for CO/NO2-1
- Program Controller to Monitor CO/NO2-1
- Program Controller to Open Louver 2 and 3
- Program Controller for EF-8 Enable
- Program Controller for Stage1&2 Lighting. The HVAC for the breakroom is programmed on a schedule but will operate outside the schedule if the lights are turned on. There is no standalone lighting control panel that could be found. The lights are operated by two switches at each of the entry door.
- Graphics and Front End Integration for All Sequences

Truck Storage Building and Office GAS 3,4/Combustible Gas 5

- Demo Existing Controls for GAS 3,4,5
- Add New Controller for Existing CO/NO2 3
- Add New Controller for Existing CO/NO2 4
- Add New Controller for Existing Combustible Gas 5
- Pull new Communications Bus from Closest Controller to CO/NO2 3,4,5
- Program Controller to Monitor Washy Bay 1 Pumps Status
- Program Controller for EF-1 Enable
- Program Controller for EF-3 Enable
- Program Controller for EF-5 Enable
- Program Controller for EF-7 Enable

- Program Controller for EF-10 Enable
- Program Controller for EF-11 Enable
- Graphics and Front End Integration for All Sequences

Truck Storage Building and Office GAS 5,6,11

- Demo Existing Controls for GAS 3,4,5
- Add New Controller for Existing CO/NO2 5
- Add New Controller for Existing CO/NO2 6
- Add New Controller for Existing CO/NO2 11
- Pull new Communications Bus from Closest Controller to CO/NO2 5,6,11
- Graphics and Front End Integration for All Sequences

Truck Storage Building and Office GAS 7,8

- Demo Existing Controls for GAS 7,8
- Add New Controller for Existing CO/NO2 7
- Add New Controller for Existing CO/NO2 8
- Pull new Communications Bus from Closest Controller to CO/NO2 7,8.
- Program Controller to Monitor Washy Bay 1 Pumps Status
- Program Controller for EF-4 Enable
- Graphics and Front End Integration for All Sequences

Truck Storage Building and Office GAS 9,10

- Demo Existing Controls for GAS 9,10
- Add New Controller for Existing CO/NO2 9
- Add New Controller for Existing CO/NO2 10
- Pull new Communications Bus from Closest Controller to CO/NO2 9,10.
- Program Controller to Monitor Washy Bay 2 Pumps Status
- Program Controller for EF-6 Enable
- Graphics and Front End Integration for All Sequences

Part 3 – Carrier iVU Front End Carrier i-VU Pro

- Furnish and Install Carrier i-VU Pro Software
    - Install Software on Owner Provided Windows 10 PC.
    - License i-VU Configured per Owners Preference.
    - i-VU License has No Expiration or Annual Fees.
    - Provide and Install New Carrier XT-RB Router
- Use Graphics and Tables Saved to Rebuild/Reinstall Floorplans
- Make Graphic Changes per Owner Request for Preferred System Navigation
- Owner's Training on New System
- 1 Year Parts and Labor Warranty

Part 4 - Controls System Components Warranty

- One year parts and labor warranty
- Manufactures warranty

ORIGINAL SIZE = 24" x 36"
X:\44062\cad\44062dcM101.dgn

SCALE: 1/8"=1'-0"
PLOTTED BY: AdamH

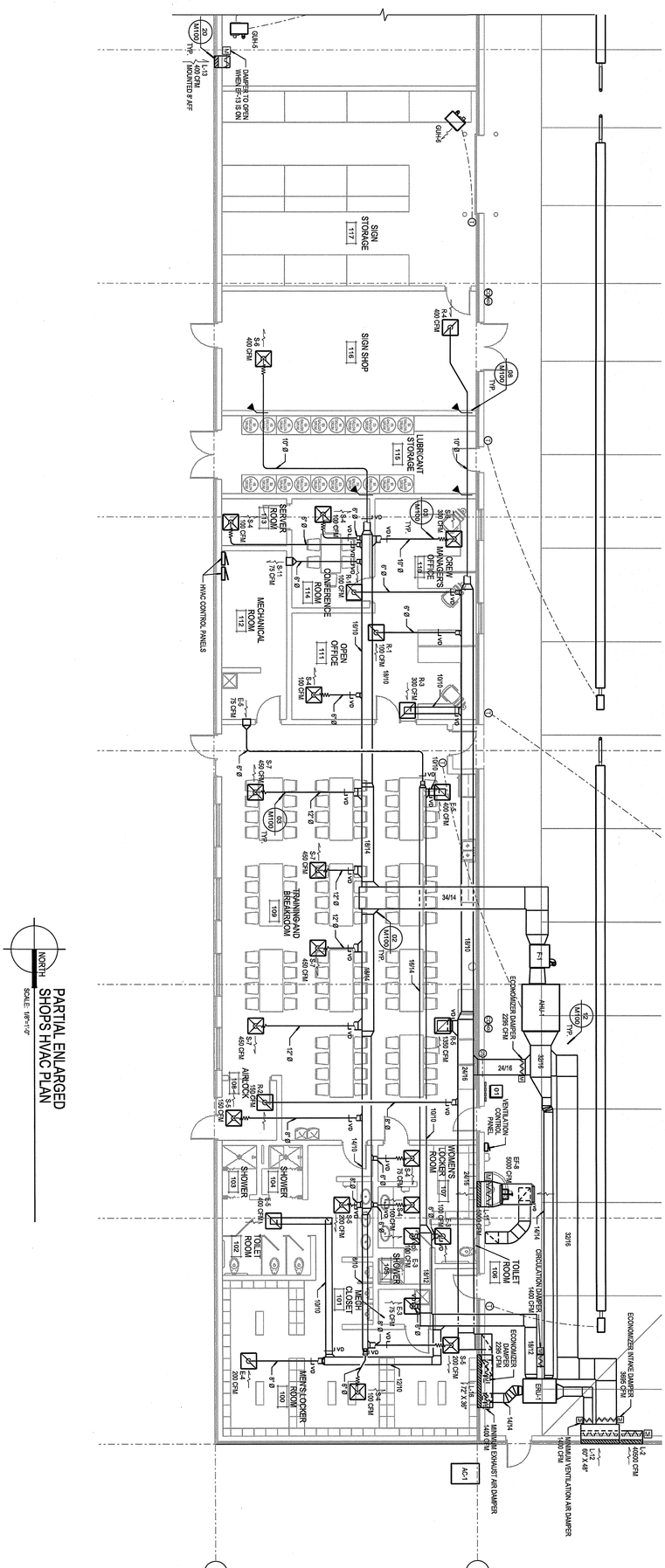

NORTH

PARTIAL ENLARGED SHOPS HVAC PLAN

SCALE: 1/8"=1'-0"

KEYNOTES

01 REMOTE WALL CONTROL FOR DSF-1 TO DSF-4 TO CONTROL SPEED OF FAN WITH DIGITAL KEYPAD AND LED DISPLAY

Due to electronic distribution, this drawing may not be printed to the scale indicated on the drawings. Do NOT use scale to determine dimensions or sizes.

Due to electronic distribution, this drawing may not be printed to the scale indicated on the drawings. Do NOT use scale to determine dimensions or sizes.

M101

ENLARGED HVAC PLANS

PROJECT NUMBER	44062
APPROVED BY	
REVIEWED BY	
DRAWN BY	EPL
7/29/2010	5:29:37 PM

NEW VEHICLE STORAGE
AND SHOPS BUILDING
DODGE COUNTY HIGHWAY DEPARTMENT
JUNEAU, WISCONSIN

Angus Young
Balance in Creativity
Architecture
Engineering
Interior Design
555 South River Street Janesville, WI 53548-4783
Ph: 608.756.2326 Fx: 608.756.0464
www.angusyoung.com

ISSUANCES	REVISIONS
PLAN COMMISSION SUBMITTAL 03/08/10	
PLAN COMMISSION REVISIONS 05/24/10	
CM REVIEW SET 06/28/10	
STATE REVIEW SET 07/20/10	
OUT TO BID 08/03/10	

Copyright © 2010 Angus-Young Associates, Inc., All Rights Reserved

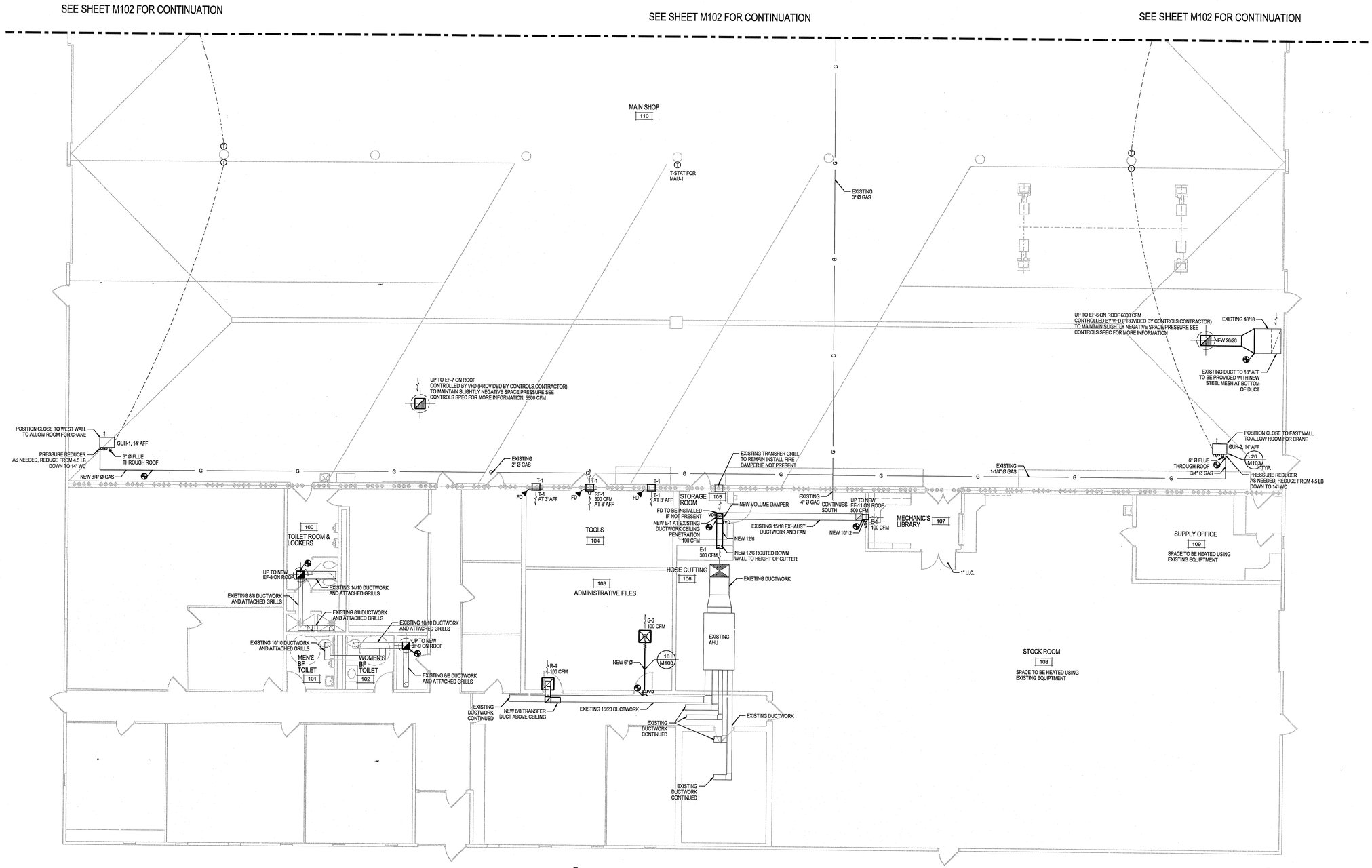

NORTH

ENLARGED HVAC PLAN - SOUTH

SCALE: 1/8"=1'-0"

0 4' 8' 16'

GENERAL NOTES

1. INFORMATION SHOWN ABOUT EXISTING MECHANICAL SYSTEMS WAS OBTAINED FROM EXISTING DOCUMENTATION AND FIELD OBSERVATIONS.
THE CONTRACTOR SHALL FIELD VERIFY ALL EXISTING CONDITIONS AND MAKE ANY NECESSARY MINOR REVISIONS REQUIRED TO COMPLY WITH THE INTENT OF THE CONSTRUCTION DOCUMENTS. REPORT SIGNIFICANT DISCREPANCIES TO THE ARCHITECT/ENGINEER.

FIRE RATING LINE LEGEND

LINES SHOWN WITHIN WALLS DENOTE FIRE RATED ASSEMBLIES AS FOLLOWS:

- 4 HOUR FIRE RATING
- 3 HOUR FIRE RATING
- 2 HOUR FIRE RATING
- 1 HOUR FIRE RATING

NOTE: ALL LINES MAY NOT BE USED IN THIS SET.

SCALE: 1/8"=1'-0"
PLOTTED BY: edward
ORIGINAL SIZE = 24" x 36"
X:\44080\ca8\44080ca8M101.dgn

Due to electronic distribution, this drawing may not be printed to the scale indicated on the drawings. Do NOT use scale to determine dimensions or sizes.

REVISIONS

ISSUANCES
STATE REVIEW SUBMITTAL SET: 02/15/10
CNTY BRD / PLAN COMMISSION SUBMITTAL: 02/08/10
OUT TO BID: 03/24/10

Copyright © 2010 Angus-Young Associates, Inc., All Rights Reserved

Angus Young
Architecture Engineering Interior Design
Balance in Creativity
333 South River Street Janesville, WI 53548-4627
Ph: 608.758.2236 Fx: 608.758.0484
www.angusyoung.com

Due to electronic distribution, this drawing may not be printed to the scale indicated on the drawings. Do NOT use scale to determine dimensions or sizes.

DODGE COUNTY
HIGHWAY DEPARTMENT
DODGE COUNTY HWY. COMMISSION
JUNEAU, WI

KEYPLAN

PROJECT NUMBER 44080
APPROVED BY JLI
REVIEWED BY JCT
DRAWN BY ERL
3/23/2010 4:17:41 PM

ENLARGED HVAC PLAN SOUTH

M101

ORIGINAL SIZE = 24" x 36"
X:\44062\cad\44062dcM102.dgn

SCALE: 1/8"=1'-0"
PLOTTED BY: AdamH

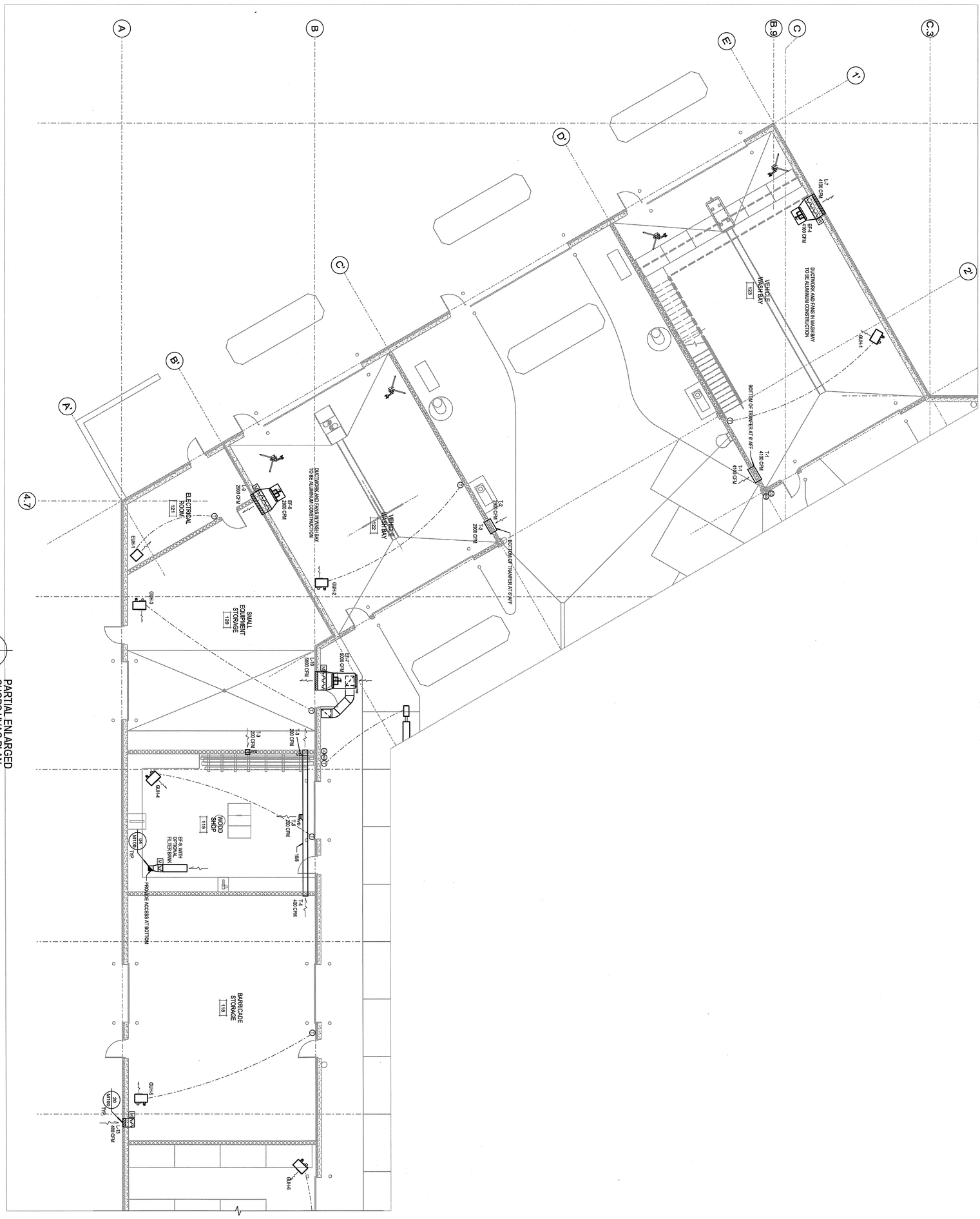

PARTIAL ENLARGED SHOPS HVAC PLAN
NORTH
SCALE: 1/8"=1'-0"

Due to electronic distribution, this drawing may not be printed to the scale indicated on the drawings. Do NOT use scale to determine dimensions or sizes.

Due to electronic distribution, this drawing may not be printed to the scale indicated on the drawings. Do NOT use scale to determine dimensions or sizes.

M102

ENLARGED HVAC PLAN

PROJECT NUMBER	44062
APPROVED BY	
REVIEWED BY	
DRAWN BY	EPL
7/29/2010	5:29:42 PM

NEW VEHICLE STORAGE
AND SHOPS BUILDING
DODGE COUNTY HIGHWAY DEPARTMENT
JUNEAU, WISCONSIN

Angus Young
Balance in Creativity
Architecture
Engineering
Interior Design
555 South River Street Janesville, WI 53548-4783
Ph: 608.756.2326 Fx: 608.756.0464
www.angusyoung.com

ISSUANCES	REVISIONS
PLAN COMMISSION SUBMITTAL 03/08/10	
PLAN COMMISSION REVISIONS 05/24/10	
CM REVIEW SET 06/28/10	
STATE REVIEW SET 07/20/10	
OUT TO BID 08/03/10	

Copyright © 2010 Angus-Young Associates, Inc., All Rights Reserved

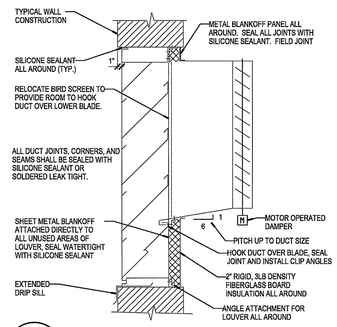

20 M100 LOUVER INSTALLATION DETAIL

SCALE: NONE

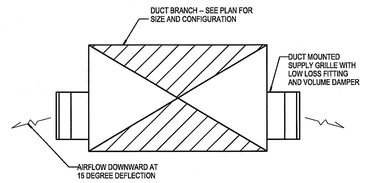

16 M100 SUPPLY DUCT DETAIL

SCALE: NONE

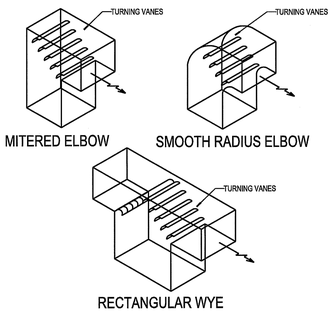

12 M100 TURNING VANES IN DUCTS

SCALE: NONE

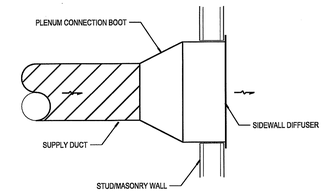

08 M100 SIDEWALL REGISTER DETAIL

SCALE: NONE

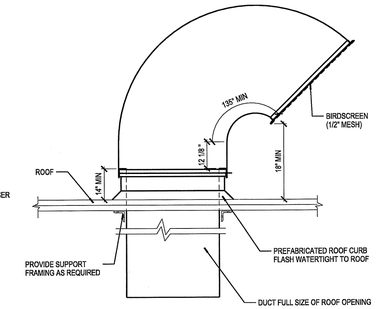

04 M100 TYPICAL GOOSENECK DETAIL

SCALE: NONE

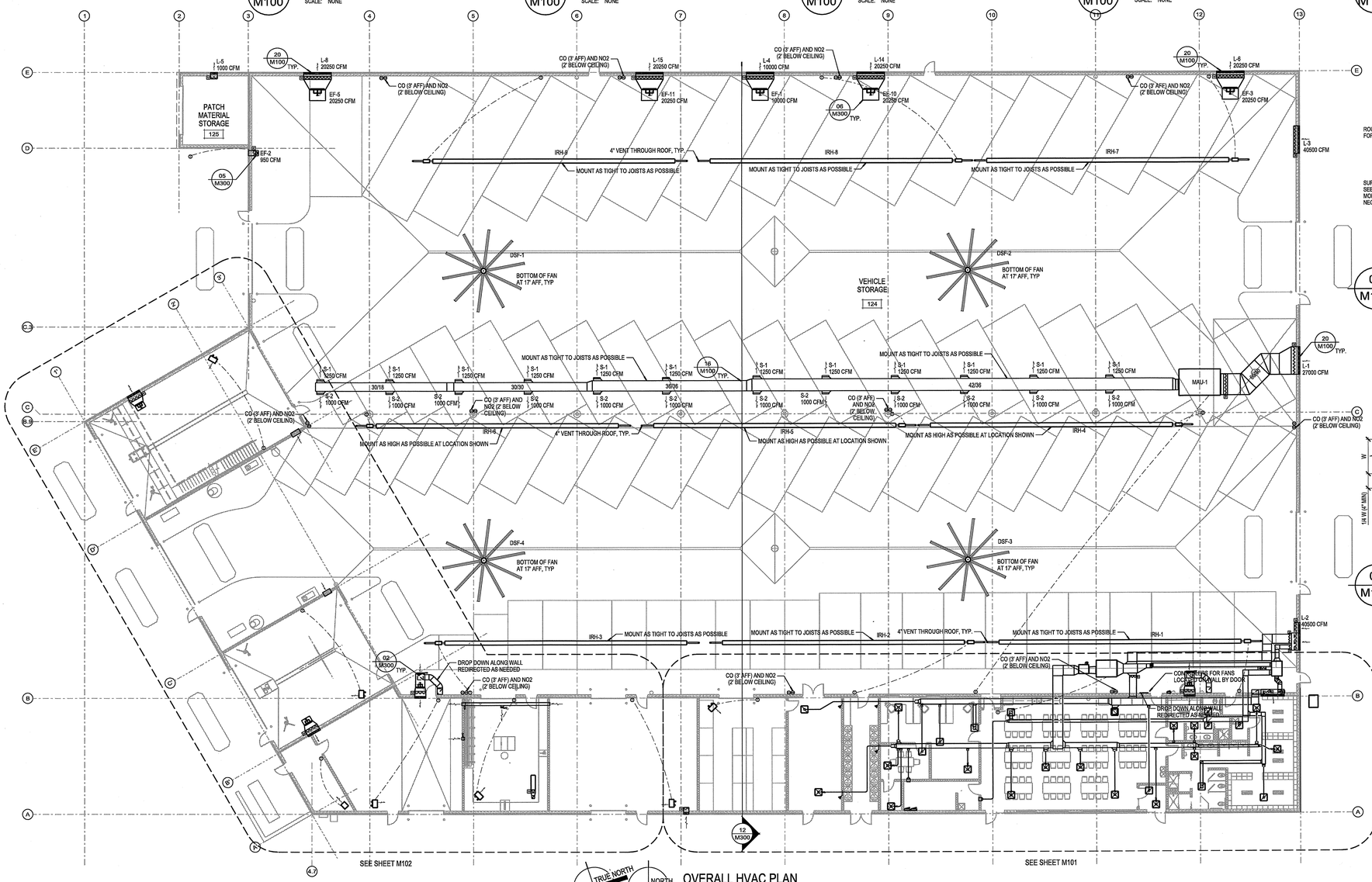

OVERALL HVAC PLAN

SCALE: 1/16"=1'-0"

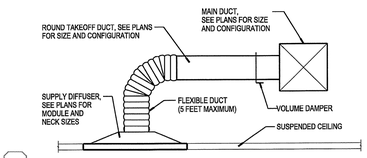

03 M100 TYPICAL SUPPLY DIFFUSER TAKEOFF

SCALE: NONE

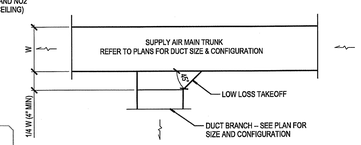

02 M100 TYPICAL LOW LOSS BRANCH TAKEOFF

SCALE: NONE

GENERAL NOTES

1. ACTUAL LOCATION OF GRILLES AND DIFFUSERS SHALL BE COORDINATED WITH REFLECTED CEILING PLAN. IF THERE ARE ANY DISCREPANCIES VERIFY FINAL LOCATION WITH ARCHITECT/ENGINEER.
2. PAINT INTERIOR OF DUCT AT RETURN GRILLE FLAT BLACK.
3. INSTALL THERMOSTATS/SENSORS NEXT TO AND AT SAME HEIGHT AS LIGHT SWITCHES, UNLESS NOTED OTHERWISE.
4. T-STAT CONDUIT AND BOXES INSTALLED BY ELECTRICAL CONTRACTOR TO ABOVE CEILING.

CO = CO SENSOR

NO2 = NO2 SENSOR

SCALE: 1/16"=1'-0"

PLOTTED BY: Adamh

ORIGINAL SIZE = 24" x 36"

X:\44062\cad\44062dM100.dgn

Due to electronic distribution, this drawing may not be printed to the scale indicated on the drawings. Do NOT use scale to determine dimensions or sizes.

REVISIONS

ISSUANCES

PLAN COMMISSION SUBMITTAL	03/08/10
PLAN COMMISSION REVISIONS	05/24/10
CM REVIEW SET	06/28/10
STATE REVIEW SET	07/20/10
OUT TO BID	08/03/10

Copyright © 2010 Angus-Young Associates, Inc., All Rights Reserved

Angus Young
Architecture Engineering Interior Design
Balance in Creativity
555 South River Street Janesville, WI 53548-4783
Ph: 608.756.2326 Fx: 608.756.0464
www.angusyoung.com

NEW VEHICLE STORAGE AND SHOPS BUILDING
DODGE COUNTY HIGHWAY DEPARTMENT
JUNEAU, WISCONSIN

PROJECT NUMBER 44062

APPROVED BY

REVIEWED BY

DRAWN BY EPL

7/29/2010 5:29:28 PM

OVERALL HVAC PLAN

M100

Due to electronic distribution, this drawing may not be printed to the scale indicated on the drawings. Do NOT use scale to determine dimensions or sizes.

ATTACHMENT B
RFB COST SHEET

Complete this page and include it with your sealed response to the request.

BASE BID: Base bid includes all work required to complete the Project, including permits, general conditions, overhead, profit, insurance, bonds, taxes, and all other expenses. The base bid shall be awarded to one lowest, responsive, and responsible bidder. Dodge County reserves the right to reject any or all bids or parts thereof, to waive any technicality in any bid and accept any bid deemed to be the most advantageous to the County.

We, the undersigned, propose to the Highway Department, Juneau, Wisconsin, the following items, as herein specified by us in accordance with this RFB.

RFB Pricing

Base Bid

Provide costs for all labor, materials, and equipment to complete the project in strict accordance with the Specifications and/or Drawings

Parts 1, 3 & 4 of Scope of Work $ _____

Part 2 of Scope of Work $ _____

FOR THE SUM OF

_____

Dollars $_____

Pricing will be held for **90 days**

Company Submitting Bid _____

Signature _____ Title _____

Printed Name _____

Company Mailing Address _____

City, State, Zip _____

Telephone Number ( ) _____ Fax Number ( ) _____

Email Address: _____

Date Signed _____

BID MUST BE SIGNED OR IT WILL BE REJECTED

ATTACHMENT C
Statement of Acknowledgment

Complete this page and include it with your sealed response to the request.

I have read this Request for Bid (RFB), all the attachments, addenda (if any) and exhibits issued for this project and understand the contents and requirements.

Binding Signatures:

The undersigned Contractor, submitting their bid, hereby declares and agrees to be bound, and to perform the work in accordance with all the terms, conditions and requirements of this Request for Bid, the within and foregoing bid, the contract, the applicable specifications, special provisions, and the schedule of prices as hereby submitted and made part of their bid submission.

Company Name: _____

Address: _____

_____

Original Signature: _____

Name (Print/Type): _____

Title_____Date_____

Phone Number:_____Fax Number: _____

E-mail:_____

ATTACHMENT D
Addendum Acknowledgement

Complete this page and include it with your sealed response to the request.

The undersigned acknowledges receipt of the following addendum(s) by checking the box(es) below:

1 ☐ Dated _____ 4 ☐ Dated_____

2 ☐ Dated _____ 5 ☐ Dated_____

3 ☐ Dated:_____ 6 ☐ Dated_____

Additional Addenda should be written here:

If no addenda were issued, please state below, complete the form, and submit with the bid package.

I/we further certify that no agreement has been entered into to prevent competition for said work and that I/we carefully examined the plans, specifications, and all other project documents.

I/we further agree to enter into the contract, under all the terms, conditions and requirements of those documents.

_____
Company Name

_____
Representative Signature

ATTACHMENT E

Contract Requirement

The awarded bidder will be required to provide a written contract outlining the terms and conditions for review and approval, please provide a sample contract with your bid.