Los Cerritos Elementary School
Campus Modernization



Schematic Design Package
Basis of Design Documents
8/11/2026

HED

Basis of Design Documents
Table of Contents

Civil.....03

Landscape Architecture.....05

Plumbing.....11

Mechanical.....15

Electrical.....21

Food Service.....31

Schematic Design
8/11/2026

Civil Basis of Design Documents



Schematic Design
8/11/2026

GRADING AND DRAINAGE

The site is currently an elementary school bordered by W Orange Avenue to the north, C Street to the west, residential units to the south and SFPUC property to the east. The proposed building will be located in the center of the campus between buildings F, J and H. The existing site topography where the proposed building is located is fairly flat with low points at existing storm drain inlets. The site is located within the Federal Emergency Management Agency's (FEMA's) Flood Insurance Rate Map (FIRM). The site lies within Flood Hazard Zone X, designated as areas determined to be outside the 0.2% annual chance flood plain.

The proposed site grading design will focus on pedestrian accessibility, safety, visual connections and ease of pedestrian circulation and connectivity while conforming to existing grades and conforms. In addition, grading will be required for proposed hardscape and landscape areas to collect and direct stormwater run-off to stormwater treatment areas. Based on hardscape pavement section thickness and building pad foundations, it is anticipated that earthwork cut and fill will be required to achieve grading requirements/design and to prepare the existing site condition for the proposed site improvements.

SITE UTILITIES

Domestic and Fire Water

It is anticipated that the new building water service shall connect to the existing campus domestic water system located east of the proposed building. It is anticipated that existing water services for buildings H and J will need to be routed around the new building.

It is anticipated that the fire water service for the new building shall connect to the existing water main located along C Street and the fire water service for existing building A and existing building B shall connect to the existing water main located along W Orange Avenue. A new fire water backflow preventer, fire hydrant, and fire department connection shall be provided for the new building, existing building A and existing building B, for each one respectively.

Sewer

It is anticipated that the proposed building sanitary sewer service will connect to the existing campus sanitary sewer system located east of the proposed building. It is anticipated that existing sanitary sewer services for buildings E, H and J will need to be routed around the new building.

Stormwater

The project site is required to meet the San Mateo County's C.3 treatment requirements, which requires new and redevelopment projects to manage stormwater using low impact design elements and best management practices elements. It is anticipated that stormwater runoff from the project created/replaced impervious areas, including roof area and hardscape area, will be treated via flow-through planters to meet C.3 requirements.

The project site stormwater runoff discharges to the existing site storm drain lines which are routed to the City's system in the SFPUC property.

Landscape Architecture
Basis of Design Documents



Schematic Design
8/11/2026

Basis of Design (Landscape Architecture)

The overall landscape design intent for the Los Cerritos Elementary School modernization is to create a welcoming, inclusive, sustainable, and child-centered campus environment that supports learning, play, social interaction, and campus safety.

The design will strengthen connections between classroom buildings, outdoor learning areas, play spaces, and campus entries while addressing existing accessibility, paving, drainage, and site-condition deficiencies. Coordinated paving, planting, furnishings, and gathering spaces will also reinforce the school's identity.

The landscape design is organized into eight primary components: campus entries, hardscape and circulation, outdoor learning and play, sport court improvements, site furnishings, fencing and gates, planting, and irrigation.

Campus Entries

Existing campus entries lack a strong sense of arrival, school identity, and adequate space for parents and caregivers to wait during arrival and dismissal.

Entry gateways will be improved to create a more welcoming and recognizable campus presence. Standing and seating areas will be incorporated where space allows and carefully integrated with existing grades, accessible routes, fencing, and security requirements.

Hardscape and Circulation

The hardscape design will improve pedestrian circulation and provide accessible connections between classrooms, campus entries, play areas, outdoor learning spaces, and proposed building improvements.

Existing cracked pavement, uneven surfaces, noncompliant slopes, and inaccessible transitions will be addressed through coordinated grading and paving improvements. New work will provide accessible paths of travel, door landings, ramps, and gathering areas.

Proposed materials include standard concrete, painted pavement graphics, playground protective surfacing, and synthetic turf. Variations in color and texture will help define circulation routes, gathering spaces, outdoor learning areas, and age-appropriate activity zones.

Site grading will provide positive drainage away from buildings and direct runoff toward proposed stormwater-management facilities.

A central pedestrian-oriented plaza will serve as the primary campus circulation and gathering spine. It will connect classroom buildings and outdoor learning areas while supporting informal play, student interaction, outdoor instruction, and campus events.

The plaza will also function as a shared-use emergency vehicle access route. Concrete paving with colorful painted bands and a vehicle-rated synthetic-turf system between the vehicle wheel tracks may be used to integrate fire access into the pedestrian environment. The pavement and turf assembly will be designed for fire-apparatus loading and coordinated with the civil engineer, geotechnical engineer, local Fire Marshal, DSA, and other applicable authorities.

Trees, planting, and furnishings will remain outside required emergency-access clear zones.

Outdoor Learning and Play

Existing outdoor classrooms and courtyards will be improved to provide accessible, flexible, and intentionally programmed learning environments. Improvements will address uneven surfacing, exposed roots, unstable stepping stones, and inaccessible seating. Outdoor learning spaces may include:

- Flexible seating and small-group gathering areas
- Reading and quiet-learning gardens
- Raised educational planting beds
- Nature-based and sensory planting
- Teaching panels and interactive features
- Shade structures and tree canopy
- Accessible paved, synthetic-turf, and playground protective surfacing

Play areas will support age-appropriate, inclusive, and imaginative play. Deteriorated playground protective surfacing and inaccessible landscape areas will be replaced or modified where included within the project scope.

Synthetic turf may be used selectively in high-use play, gathering, and learning areas where durability and year-round use are important. Living landscape, shade trees, and planted learning environments will remain important components of the campus.

Sport Court

Because the existing sport court is located outside District property, improvements will be limited to surface-level work that does not require significant subgrade disturbance.

The existing asphalt will be resurfaced and enhanced with colorful pavement graphics. Existing play markings, including hopscotch and four-square courts, will be repainted.

A small synthetic-turf soccer area may be installed using a surface-applied athletic turf system over the existing asphalt, minimizing subgrade disturbance. Existing basketball goals and play structures will remain and be protected during construction.

Site Furnishings

Site furnishings will provide opportunities for students to gather, socialize, read, learn, rest, and eat outdoors.

Furnishings may include:

- Shade structures
- Accessible picnic tables
- Benches and child-scaled seating
- Integrated seat walls
- Outdoor classroom tables
- Fixed learning furniture

Furnishings will be selected for durability, safety, ease of maintenance, and compatibility with the campus character. Permanently mounted furnishings will be used where appropriate for security and long-term operations.

DSA prechecked (PC) shade structures will be prioritized where feasible to simplify engineering and approval.

Fencing and Gates

New fencing and gates will improve campus security while maintaining visibility, accessible circulation, and a welcoming school character.

Existing perimeter and internal fencing varies in condition, and several gates and access points are noncompliant or difficult to supervise.

New fencing will include architectural metal-screen fencing and gates, with 8-foot perimeter fencing and 5-foot internal fencing.

Pedestrian and vehicular gates will be coordinated with campus security, accessible routes, emergency access, and school operations. Gate locations will maintain required clear widths and maneuvering areas

Planting

The planting design will create a greener and more comfortable campus while supporting outdoor learning, habitat, shade, seasonal interest, and campus identity.

Healthy existing trees and planting will be preserved where feasible. A qualified arborist will evaluate trees affected by construction and identify trees requiring protection, treatment, or removal.

New trees will be located to:

- Shade play and gathering areas
- Frame campus entries
- Support outdoor classrooms
- Reduce heat gain and glare
- Strengthen relationships between buildings and outdoor spaces

Plant materials will primarily consist of native and climate-adapted species suited to South San Francisco's coastal climate. Shrubs and groundcovers will provide color, texture, seasonal interest, durability, and clear visibility for campus supervision.

Planting near walkways and play areas will avoid thorns, toxicity, excessive fruit drop, and other characteristics that could create safety or maintenance concerns.

Bioretention planting will be incorporated where required using species capable of tolerating periodic inundation and extended dry conditions.

Irrigation

A new or modified irrigation system will serve all proposed planting areas and will be coordinated with the existing campus system, District standards, available water pressure, and maintenance requirements.

The irrigation system may include:

- Weather-based controls
- Pressure regulation and backflow prevention
- Drip irrigation for shrubs and groundcovers
- Bubblers or drip irrigation for trees

Planting areas will be hydrozoned according to water-use requirements, exposure, and soil conditions. Existing irrigation components that create tripping hazards or conflict with accessible circulation will be relocated or replaced.

Plumbing
Basis of Design Documents



Schematic Design
8/11/2026

South San Francisco Unified School District – Los Cerritos Elementary School

BASIS OF DESIGN

Prepared by:

H&M MECHANICAL GROUP

A. CODES AND STANDARDS

1. AGA – American Gas Association Standards
2. ADA – Americans with Disabilities Act, Title II & Title II
3. ANSI – American National Standards Institute
4. ASME – American Society of Mechanical Engineers
5. ASPE – American Society of Plumbing Engineers
6. ASTM – American Society for Testing and Materials
7. CBC – California Building Standards Code - 2025 Edition
8. CEC – California Electrical Code – 2025 Edition
9. CGC – California Green Building Standards Code - 2025 Edition
10. CMC – California Mechanical Code - 2025 Edition
11. CPC – California Plumbing Code - 2025 Edition
12. California Energy Efficiency Standards - 2025 Edition
13. ASHRAE Standard 55-2010 - Thermal Environmental Conditions for HumanOccupancy
14. ASHRAE Standard 62.1-2010 - Ventilation for Acceptable Indoor Air Quality
15. NFPA #13 - 2022 Edition

B. PLUMBING SYSTEMS:

1. Domestic Cold Water
    a. Piping shall be sized per the 2025 CPC Appendix A.
    b. The velocity of cold-water piping shall not exceed 8 feet per second.
    c. Minimum pressure at flush valves shall be 25 psi.

2. Domestic Hot Water
    a. Provide individual point-of-use electric water heaters as necessary/feasible.
    b. Shall not exceed 5 feet per second.

3. Plumbing fixtures
    a. All plumbing fixtures shall be selected to meet the 2025 California Green Code Mandatory Measures requirements, Sections 5.303.4 for water usage.
    b. Plumbing fixtures shall meet all standards listed in the 2025 California Plumbing Code.

4. Water closets
    a. 1.28 gpf maximum.
    b. Vitreous china.
    c. Manual flush.
    d. Heavy duty, open front seat.

5. Urinals
    a. 0.125 gpf maximum.
    b. Vitreous china.
    c. Manual flush.

6. Lavatories (Staff)
    a. 0.50 gpm maximum (or equivalent for metering faucets per CGC requirements).
    b. Vitreous china.
    c. Manual faucet.
    d. Heavy duty, rigid supplies.
    e. Hot and Cold water.

7. Lavatories (Student)
    a. 0.50 gpm maximum (or equivalent for metering faucets per CGC requirements).
    b. Vitreous china.
    c. Manual faucet.
    d. Heavy duty, rigid supplies.
    e. Cold water only.

8. Drinking Fountains
    a. Minimum 14 gauge stainless steel.
    b. ADA required, Hi-lo profile.
    c. Wall mounted.
    d. Cold water only.
    e. Bottle filler.

9. Mop Sink
    a. Floor mounted.
    b. Faucet to be wall mounted, atmospheric vacuum breaker with pail hook and threaded hose.
    c. Hot and Cold water.

10. Coordination with Other Trades
    a. Provide preliminary electrical loads, shaft sizes, mechanical room areas, equipment pad information, and any other information required by other disciplines as soon as possible in the early part of the design phase.

PLUMBING SCOPE:

Remove existing non-compliant fixtures and sinks. Install new plumbing fixtures, individual point-of-use electric water heaters and associated piping for restrooms and equipment that is furnished under other sections.

END OF PLUMBING BOD

Mechanical
Basis of Design Documents



Schematic Design
8/11/2026

South San Francisco Unified School District – Los Cerritos Elementary School

MECHANICAL BASIS OF DESIGN

Prepared by:

H&M MECHANICAL GROUP

A. DESIGN CRITERIA

1. Reference Codes and Standards

California Building Code, 2025 Edition
California Electrical Code, 2025 Edition
California Energy Code, 2025 Edition
California Fire Code, 2025 Edition
California Green Building Code, 2025 Edition
California Mechanical Code, 2025 Edition
California Plumbing Code, 2025 Edition
Americans with Disabilities Act, Title II & Title III
Americans with Disabilities Act Accessibility Guidelines
AMCA – Air Movement and Control Association International, Inc.
ANSI – American National Standards Institute
ARI – Air Conditioning and Refrigeration Institute
ASHRAE – American Society of Heating, Refrigeration, and Air Conditioning Engineers
SMACNA – Fire and Smoke Damper Installation Guide
SMACNA – Guidelines for Seismic Restraints of Mechanical Systems
SMACNA – Standards for Duct Construction
EPA – Environmental Protection Agency
NEMA – National Electrical Manufacturer's Association
NFPA – National Fire Protection Association
1) NFPA 90A – Air Conditioning and Ventilating Systems
2) NFPA 101 – Life Safety Code
UL – Underwriters' Laboratories

2. Load Calculations – Outdoor Conditions for the City of South San Francisco, CA

System load calculations shall be based on the following outdoor design conditions:

1) Summer - 81°f db/64°f MCWB for airside system calculations.
2) Winter - 36°f db for airside system calculations.

3. Load Calculations – Indoor Conditions

Systems will be designed to maintain the following temperature conditions. No humidity control shall be provided.

Space	Summer (^{o}F)	Winter (^{o}F)
Classrooms / Media Ctr / Library	74 ±2	70±2
Offices	74 ±2	70±2
MPR	74 ±2	70±2
Interior restrooms (indirectly conditioned)		

4. Load Calculations - Internal Air Conditioning Load Assumptions:
   Space Occupancy Density, lighting, equipment, and Ventilation loads are:

SPACE TYPE	OCCUPANCY SF/OCC	LIGHT LOAD W/SF	RECEPTACLE LOAD W/SF	VENTILATION LOAD CFM/SF
Classrooms	20	0.7	1.5	0.38
Offices	100	0.6	1.0	0.15
Media Ctr / Library	100	0.6	1.0	0.15
MPR	30	1.2	1.0	0.5
Interior restrooms	100	0.6	0.2	--

5. Exhaust rate:
   a. Single stall restroom: Min. 100 CFM.
   b. Multi-stall restroom: 0.7 cfm per plumbing fixture.

6. Load Calculation - Envelope Load Assumptions based on Performance Method for new building.
   a. Wall: Wood framed wall with R22 batt insulation and R5 rigid.
   b. Roof: Wood framed roof. Cool roof CRRC 0628-0009 with 0.64 aged solar reflectance and 0.87 thermal emittance, and overall insulation R-38.
   c. Glazing: Dual Pane metal frame – Low-E glazing with a NFRC U-value of 0.36 or better and a SHGC of 0.25 or better.
7. Load Calculation - Envelope Load Assumptions based on Prescriptive Method for existing building.
   a. Wall: Wood framed wall with R19 batt insulation.
   b. Roof: Wood framed with R19 batt insulation.
   c. Glazing: Double Pane Tinted Metal Frame.

8. Load Calculation Methodology:
   All heating and cooling loads will be completed using the Energy-Pro software latest Ver. 10.3 which is a State Certified program conforming to the California Energy Commission requirements for accuracy of performance-based calculations for Title 24 and for conformance with generally accepted heating and cooling load methods per ASHRAE Fundamentals.

9. Temperature Controls and Zoning:
   Control shall be Alerton EMS – District wide control system.

B. ACOUSTICS

1. Acoustical design criteria and recommendations, including vibration isolation and maximum duct velocities designed by the mechanical engineering team will be

reviewed and coordinated with the Acoustical Team. The Mechanical design will incorporate the Acoustical Consultant's recommendations and best practices.

Space Type	Noise Criteria (NC)	Maximum Air Velocity (fpm)
Classrooms	35	400
Office	35	400
MPR	45	600
Media Ctr / Library	30	300
Restrooms	45-50	625

C. HVAC SYSTEMS

1. EQUIPMENT BASIS OF DESIGN:

Space Type	System	Manufacturer
Classrooms	Split Heat Pump with Fan coil	Carrier
Offices	Rooftop packaged heat pump	Carrier
MPR	Rooftop packaged heat pump	Carrier
Media Ctr/Library	Rooftop packaged heat pump	Carrier
Restrooms	Roof mount /Ceiling mount exhaust fan	Greenheck

D. HVAC SCOPE

1. Existing Classrooms: Each space shall be conditioned by its dedicated split system.
   a. Split heat pump unit(s) with condenser on the roof and fan coil unit in a closet. Provide new duct distribution system. System to connect to existing Alerton controller and thermostat.

(Alternate): Replace existing gas fired furnace with High Efficiency Ultra Low Nox furnace with base mount filter rack. Existing air distribution to remain.

2. Existing Offices (bldg. A): Replace existing gas fired heating and ventilating and ductwork on roof with new rooftop packaged heat pump unit and new supply and return duct on roof. System to connect to existing Alerton controller and thermostat.

3. Existing MPR: Replace existing gas fired heating and ventilating and ductwork on roof with new rooftop packaged heat pump unit and new exposed supply and return duct in the conditioned space. System shall connect to existing Alerton controller and thermostat.

4. Bldg. K - Library/TK/Exploratorium: Each space shall be conditioned by its dedicated rooftop packaged heat pump unit. System to connect to new Alerton controller and thermostat.

5. Bldg. K - Offices: Each space shall be conditioned by its dedicated split heat pump/ceiling cassette unit. Outside air shall be delivered to each room with a supply fan with MERV 13 filter. System shall connect to new Alerton controller and thermostat.

6. Restrooms:
   a. Single stall restroom shall be ventilated by a ceiling mount exhaust fan. Fan shall be activated by occupancy sensor with time delay capability.
   b. Multi stall restroom shall be ventilated by a roof mount exhaust fan. Fan shall connect to Alerton controller to be activated by School programmed schedule.

Electrical
Basis of Design Documents



Schematic Design
8/11/2026



LOS CERRITOS ES MODERNIZATION

NEW CONSTRUCTION

ELECTRICAL SYSTEMS BASIS OF DESIGN

JULY 31, 2026

OWNER

South San Francisco Unified School District
210 W. Orange Ave
South San Francisco, CA 94080

ARCHITECT

HED
180 Montgomery Street Suite 2100
San Francisco, CA 94104

D50: ELECTRICAL SYSTEMS

Electrical, lighting, and signal systems shall be designed in accordance with all applicable regulations, codes and standards, including the latest edition of the National Electrical Code, State of California Title 24, local municipal codes and regulations, local utility company regulations and requirements, and the latest District Standards. These include:

2025 California Building Code
2025 California Electric Code
2025 California Energy Code (Title 24, part 6)
2025 California Fire Code
2025 California Green Building Code
Americans with Disabilities Act (ADA)
Utility Company Standards (PG&E)
San Francisco Unified School District Design Standards & Guidelines

General Scope of Electrical Work:

The scope of electrical work for this project shall include all materials, labor, equipment, services, and incidentals necessary to install the electrical work complete, including but not limited to the following:

1. Replacement of existing PG&E service with new service, including removal of existing transformer and existing underground PG&E primary/secondary, removal of existing PG&E meter from existing main switchboard, and installation of new underground PG&E primary/secondary feeders, new PG&E transformer, and new 2000A, 120/208V, 3-Phase, 4-Wire main switchboard at new location. The existing main switchboard will be converted to a distribution switchboard and backfed from new breaker in new main switchboard.
2. Demolition of existing canopies that conflict with the new Building K footprint, including replacement of all existing surface-mounted conduit and wire run exposed on canopies for all power distribution, site telecommunications and clock/speaker, and fire alarm systems.
3. Replacement of existing fire alarm system throughout the campus, including new headend system and new devices throughout all new/existing buildings.
4. Replacement of existing lighting in existing classroom buildings, including new circuiting and controls
5. Replacement of existing kitchen at Building B, including all new circuiting and controls for new food service equipment.
6. New branch circuits for new HVAC equipment in existing classroom buildings.
7. New 600A, 120/208V, 3-Phase, 4-Wire distribution panel in new electric room in new Building K.
8. Extension of the existing signal system services from the campus head-end equipment, to the new building. This shall include, but not be limited to the following systems:
    a. Data Communications System
    b. Voice Communications System
    c. Clock/Speaker System
    d. Fire Alarm System
    e. Spare conduits for EMS, security/surveillance, and/or future use.
9. New telecom wiring infrastructure in the new building shall include new pathways, cabling, jacks, patch panels, and racks, as required to serve the new building areas.

10. New clock, bell signal, and public address annunciation, with new devices and wiring throughout the new building areas.
11. New fire alarm system speaker/strobe notification devices (for voice evacuation), as required by code, and automatic smoke detectors throughout per SB 575.
12. New interior and exterior LED lighting fixtures at the new building areas and surrounding new site areas.
13. New LED emergency and exit lighting throughout the new building areas as well as along the egress path to the public right-of-way, as required by Code.
14. New CA Title 24 compliant lighting controls for all new lighting.
15. All related branch circuit wiring, wiring devices and connections to all new equipment and convenience receptacles requiring electrical service in the new building.
16. Mechanical equipment power connections for new equipment in the new building, including fuses, motor rated switches, motor starters (where required) and disconnects.
17. The new building shall include a new photovoltaic system and battery storage system. PV modules are to be roof mounted. See section D5011 and D5012 below, for system sizing.

D5010: ELECTRICAL SERVICE AND DISTRIBUTION

The new building will include Classrooms, Restrooms, Library, Offices, and miscellaneous support spaces. Following is the distribution equipment required:

(1) 600 Amp distribution panel (120/208V, 3-Phase, 4-Wire) – power for downstream loads as well as larger mechanical loads (panel located at electric room).

(2) 225 Amp branch panel (120/208V, 3-Phase, 4-Wire) – power for all equipment in building, including lighting, receptacles, HVAC, and miscellaneous loads.

(1) 100 Amp branch panel (120/208V, 3-Phase, 4-Wire) – power for all IDF requirements.

The distribution system shall include all code required grounding, to include an Ufer ground in the slab, bond to building steel, bond to building cold water service, and a supplemental copper ground rod.

D5011: PHOTOVOLTAIC (PV) POWER SYSTEM

Per California Title 24, for new construction of School buildings, the new building will require a roof mounted solar photovoltaic (PV) power system. The new photovoltaic system will be tied-in at the new building, on the load side of the main panel.

The minimum kW system size of the PV system shall be based on the 2025 Title 24 Energy Code section 140.10(a) for solar photovoltaic requirements for school occupancies, based on the square footage size of the building design.

Based on a preliminary new construction area of 5,789sf, the minimum required PV system size will be 7.35 kW. This would require roughly 525sf of roof area (based on 14 watts/sf coverage).

The PV system shall include roof mounted solar PV modules (minimum 420 watt per module), with micro-inverters or string inverters. Provide edge of roof set-backs of at least 4 feet and at least 3 feet from any peaks.

System size may be higher than the minimum required by code (to be determined in design development phase).

D5012: BATTERY ENERGY STORAGE SYSTEM (BESS)

Per California Title 24, for new construction of School buildings, the new building will require a BESS system. The new BESS will be tied-in at the new building, on the load side of the main panel.

The BESS shall be grid-connected to provide energy arbitrage each day (i.e. store energy generated by solar or purchased from the grid at non-peak times and used from the batteries at peak times – to avoid grid purchase).

The BESS will not be configured for microgrid operation (not required by code).

The minimum kWH battery energy storage size shall be based on the 2025 Title 24 Energy Code section 140.10(b) for battery storage system requirements for School occupancies, based on the minimum PV system kW requirements noted above.

This minimum kWH storage size is a required system for new construction by the CA Energy Code and is not provisions only.

Per Title 24 Energy Code, the minimum BESS system size shall be 3.85 kW / 15.4 kWH for the new building.

The BESS shall include a grid-forming inverter to monitor and control the energy storage functions.

It should be noted, if the new building has sufficient overall energy efficiency, as determined by the performance method of Title 24 calculations, the BESS may be eliminated from the project.

D5015: SIGNAL SYSTEM DISTRIBUTION

The new building will be fed from the existing Campus Main Distribution Frame (MDF) for Telecom/Voice.

A new 24-strand single mode (OS2) fiber cable, and 100-pair Category 5E cables, shall be provided from the Campus MDF to a new IDF at the new building to serve the data network and voice system.

The existing campus clock/speaker system uses an analog headend with amplifiers, located in a closet in the MDF in Building A. The new devices at new building will have homerun cabling to this headend system.

A new 100-pair copper cable (OSP rated) for speakers and (3)#10 THWN for clocks shall be provided from the clock/speaker system head-end equipment to a new IDF to support any analog requirements.

See section D6030 (Data / Voice System) and section D6080 (Clock / Speaker System) for additional information.

D5020: LIGHTING

New interior and exterior lighting fixtures for the new building shall utilize LED lamp sources. The lighting shall be designed in accordance with California Title 24, Part 6, architectural design criteria, and the recommendations of The Illuminating Engineering Society (IES) of North America.

Interior Lighting:

General:

- Luminaires with 3500K CCT LEDs will be specified for the interior lighting.
- Lighting approaches will follow SSFUSD Elementary School Educational Specifications.

Building A:

- See General lighting descriptions for similar spaces below.

Building B:

- Multi Use space will be illuminated by decorative direct/indirect LED luminaires.
    - One light bar will be provided in front of the platform with adjustable spotlights and dimming.
    - General stage lighting will be provided using direct LED downlights.
    - One light bar will be provided above the platform with adjustable spotlights and dimming.
- The Kitchen will be illuminated with recessed 2x2 or 2x4 lensed troffers.
- See General lighting descriptions for similar spaces below for other areas.

Building C:

- See General lighting descriptions for classroom spaces below.

Building D:

- See General lighting descriptions for classroom and restroom spaces below.

Building E/F:

- See General lighting descriptions for classrooms and other spaces below.

Building H:

- See General lighting descriptions for classroom and storage spaces below.

Building J:

- See General lighting descriptions for classroom and restroom spaces below.

Building K:

- The Exploratorium will be illuminated by linear aircraft cable suspended LED luminaires with indirect/direct light distribution or decorative direct/indirect pendant mounted luminaires.
- The Library will be illuminated by linear aircraft cable suspended LED luminaires with indirect/direct light distribution or decorative direct/indirect pendant mounted luminaires.
    - Special care will be taken to ensure that there is adequate lighting on the book stacks.
- See General lighting descriptions for similar spaces below for other areas.

General lighting for similar spaces:

- Offices will be illuminated by linear aircraft cable suspended LED luminaires with indirect/direct light distribution or recessed 2x2 or 2x4 LED troffers, depending upon the design of the ceilings.
- Storage rooms/Closets will be illuminated by linear surface or pendant mounted LED luminaires with an opal white wraparound diffuser.
- Restrooms will be illuminated by linear LED luminaires mounted in a continuous row on the wall above the mirror and stalls. These luminaires have an opal white acrylic lens and provide indirect/direct light distribution.
- Elec/Mech/IDF/Fire Riser will be illuminated by linear surface mounted LED luminaires with an opal white wraparound diffuser and wireguard.
- Classrooms will be illuminated by linear aircraft cable suspended LED luminaires with indirect/direct light distribution.
- Flex rooms and Breakout room will be illuminated by linear aircraft cable suspended LED luminaires with indirect/direct light distribution.

Exterior Site Lighting:

Luminaires with 3000K CCT LEDs will be specified for the site lighting.

Full cutoff pedestrian scaled post top mounted area luminaires with IES optical patterns specific to the area of illumination will be used.

Recessed or surface mounted downlight luminaires shall be used at covered canopy walking areas.

Exterior lighting shall include lighting on new building and at site as required for path of travel lighting requirements. Path of travel through existing campus shall be lit by existing campus lighting wherever possible with new lighting only where required.

D5021: LIGHTING CONTROLS

The new lighting controls for all new areas shall include multiple switching zones and dimming for each space, for flexibility in lighting levels to accommodate various space uses (with dimming and daylight controls, per Title 24 requirements).

The lighting control system products shall be by Wattstopper as called for in the District Standards.

All spaces shall utilize wall or ceiling mounted dual technology (infrared and ultra-sound) digital occupancy motion sensors and daylight photo sensors to provide Title 24 required automatic lighting shut-off. These areas will not require any other connection to a central time clock or lighting control system.

Each space shall be provided with local dimmers and lighting system digital room controllers to allow for local and Title 24 required control.

Other storage and misc. use rooms, under 250 square feet, shall be provided with wall switch type occupancy sensors with dual level control per Title 24.

Exterior luminaires rated over 40 watts shall not be used to avoid Title 24 requirements for integral occupancy sensors with partial dimming.

Occupancy sensors at restrooms shall be interlocked with fan controls for the restroom.

Occupancy sensors at classrooms shall not be tied to the mechanical control system.

The lighting control system shall be connected to the LAN and not to a BMS or EMS.

All exterior lighting shall be controlled via lighting control relay panel with built-in astronomical timeclock.

D5022: EMERGENCY LIGHTING

Emergency egress lighting shall be provided at all required paths of egress. Power for emergency fixtures shall be fed from a new central battery inverter power supply, to provide 90 minutes of emergency egress lighting. The inverter shall be located in the electric room.

Emergency designated fixtures shall be controlled with UL924 rated control modules, to switch and/or dim the EM designated fixtures in parallel with the normal designated fixtures. UL 924 modules shall serve to automatically energize the EM designated fixtures to full light output upon loss of the normal power system.

All new exit signs shall be LED style with cast aluminum housings and provided with emergency power from the central battery inverter as well, for 90 minutes of operation without normal power.

D60: COMMUNICATIONS

D6030: DATA / VOICE SYSTEM

All new voice and data communications system infrastructure shall be provided for the new building, served from a new Intermediate Distribution Frame (IDF) cabinet to be located in the electric room at the new building. As noted under Signal System Distribution above, the new IDF will be served from the existing campus MDF.

The new IDF cabinets shall be APC NetShelter SX 42U #AR3140 with seismic kits and all required vertical/horizontal cable management, per the District Standards.

The new network switches shall be Cisco per District requirements and shall be provided by the Contractor.

The voice and data system shall support Voice over IP capabilities. Data system transmissions will be rated to handle up to 10GB data communications over single mode fiber, with Category 6A rated UTP copper station cabling for all local wall and wi-fi jack connections.

All wi-fi equipment shall be POE (power over Ethernet) and will not require additional electrical outlets adjacent to the jack locations.

The School District shall furnish all active hubs, routers, servers, projectors, wi-fi routers, and the connection and configuration of the computers and telephone hand-sets to the voice/data system wiring infrastructure.

The entire voice/data system shall be installed and tested to meet EIA/TIA Category 6A UTP requirements, per District Standards.

New individual voice/data outlets and Category 6A station cables shall be routed from each voice/data jack location to the new IDF cabinet. All station cables to be terminated on modular Category 6A patch panels for cross-connecting to the campus network systems.

All data cabling to be run in conduit (within walls) or above accessible ceilings on j-hangars (in concealed areas). Minimum 1" conduits to be provided from wall boxes up to nearest accessible ceilings with bushed ends.

Fire rated sleeves to be provided above ceilings at all fire rated partitions.

D6080: CLOCK / SPEAKER SYSTEM

All new clock/speaker system infrastructure shall be provided for the new building. As noted under Signal System Distribution above, this will be served from the existing Campus Main Clock/PA head-end equipment, to a new IDF at the new building electric room. The campus has an existing traditional twisted-pair analog Clock / Speaker system. All new devices shall be compatible with the existing system head-end equipment located in the MDF at Building A.

New building clock branch wiring (3#14) and speaker wiring (2#16 shielded) shall be extended from the new IDF terminal cabinet at the electric room to the new device locations throughout the new building.

New wall mounted clocks and speaker shall be provided at all areas in combination enclosures. Clocks shall be 12" round analog. Speakers to be 8" round with flat baffle.

Each location shall utilize flush mounted combination enclosures.

D70: ELECTRIC SAFETY AND SECURITY

D7090: FIRE ALARM SYSTEM

A new fire alarm control panel that supports voice evacuation devices, with audio amplifiers, remote annunciator, and remove microphone, shall be provided in Building A to support all new devices throughout the campus.

All buildings shall be provided with Fire Alarm Power Expander panels and remote amplifiers to serve the new alarm speaker / strobe devices throughout the new spaces.

All new components shall be State and Local Fire Marshal approved. All notification wiring shall be Class B throughout with full emergency battery backup as required by code.

Duct detectors shall be provided for any new supply fans rated 2,000 CFM and above.

Connections for fire sprinkler flow switches, valve supervisory switches, and any new PIV valves (provided and installed by the Sprinkler Installer) shall be provided by Electrical.

All fire alarm system wiring shall be in conduit, 3/4" minimum.

Speaker notification devices shall be installed throughout each area to provide audible fire alarm voice notification in all areas as required by code, including exterior areas.

Strobe light notification devices shall be installed in all common areas as required by code, to include Classrooms, Restrooms, and support spaces.

Smoke detectors shall be provided for complete building area coverage in all spaces, minimum one in each room or space and at least (1) per 900 square feet in larger areas.

If the spaces above new accessible ceilings contain combustible materials and these spaces are NOT provided with fire sprinkler coverage (above ceilings), additional above ceiling heat detectors shall be provided in these areas as required by code.

D7091: MISCELLANEOUS SAFETY SYSTEMS

The electrical contractor shall be responsible for all new conduit and backboxes for security/access control/video surveillance. The design team will show locations for all devices in the Design Documents, at the direction of the District. All conduit will homerun to the IDF, with pull rope in each conduit, for future use by the security system installer.

The Division of the State Architect, in accordance with the California Fire Code and local requirements, may require an Emergency Responder Radio Coverage System (ERRCS) for the new building. The exact requirements depend on radio frequency testing in the fully constructed new building. We recommend the District contract with an ERRCS design firm to identify possible locations for antenna, amplifiers, and other devices for the ERRCS. The electrical drawings will incorporate this design to identify conduit and back box locations for this system in the new building.

Food Service
Basis of Design Documents



Schematic Design
8/11/2026

08/11/2026

Los Cerritos Elementary School

From:
RAS Design Group LLC
Martinez, CA 94553-1145

Schematic Design
Not For Bid/Pricing
Not For Construction
For Architect's and Engineers' Design Information Only

SECTION 114000 – FOOD SERVICE EQUIPMENT

PART 1 - GENERAL

1.1 BID AND CHANGE ORDER FORMAT REQUIREMENTS

A. All bids are to be complete with pricing per item. An equipment subtotal is to be provided with a separate subtotal for delivery and installation.

B. Installation scope is to be outlined in a narrative for clarification.

C. All exclusions to scope within this section or to other scopes are to be listed below the narrative.

D. All subcontractors to the FSEC are to be listed by name and contact information as follows:

1. Custom Stainless Fabricator.

2. Millwork Fabricator.

3. Equipment and Fabrication Installer.

4. Fire Suppression Contractor.

E. All change orders are to be related back to the original bid with additions and deductions to the items shown with a final total for each item.

1.2 WORK INCLUDED

A. Equipment and fittings specified, shown, and described in these Specifications.

B. Utility lines: Wiring and piping required within equipment or component configuration. Terminate lines at designated and accessible points for connection in field. Exposed lines shall be chrome-sleeved or chrome plated.

C. Electrical: Switches, terminal boxes, circuit panels, cords and plugs, controls, solenoid valves and motor starters for equipment provided herein; electrical receptacles mounted in or on Foodservice Equipment, where applicable.

D. Plumbing: Sink faucets, drains, strainers, and tailpieces; vacuum breakers, where attached to equipment; equipment fill faucets.

E. Hangers to structural ceiling (but not fittings in structure) to support suspended foodservice equipment, where applicable unless specified otherwise.

F. Food Service Equipment Contractor to coordinate and verify all requirements of Owner, Purveyor, Operator, Other, etc. equipment items that are located within the kitchen & servery areas and indicated on FS series drawings or within specification section 11 40 00.

1.3 RELATED WORK

A. Equipment furnished as part of this section, but installed as part of work within other sections:

1. Fittings: Where applicable, furnish electrical and mechanical fittings, valves, switches, controls, regulators, strainers, and devices required for the proper operation of the equipment except as specified otherwise herein. Where such items are not mounted on the equipment, furnish items to the appropriate contractor the building site for installation in the utility lines.

2. Water Treatment Devices: Furnish cartridge type filters for installation in potable water, ice making equipment or steam equipment. Devices shall be manufactured by “Cuno”, appropriate to equipment, and installed by Plumbing Contractor. Provide isolation and bypass valves for the filters.

1.4 ARCHITECTURAL / STRUCTURAL / MECHANICAL / PLUMBING / ELECTRICAL WORK

A. Utility rough in, utility lines and final connections between rough-in and foodservice equipment are part of Plumbing, Mechanical and/or Electrical drawings and specifications.

B. Installation of mechanical and electrical fittings and devices in utility lines, including inter-connecting field wiring/piping between foodservice equipment are part of Plumbing, Mechanical and/or Electrical drawings and specifications.

C. Final disconnects electrical receptacles in building structure; contactors; and conduit in structure required for electrical lines are part of Electrical drawings and specifications.

D. Floor drains, floor sinks, P-traps, shut-off valve, grease traps/interceptors, water heaters, pressure reducers and regulators are part of Plumbing drawings and specifications.

E. Ductwork from exhaust hoods to building exhaust or supply fans; flue pipes; exhaust fans for hoods; room ventilators, and air supply blowers are part of Mechanical drawings and specifications.

F. Backing plates or blocking in wall or ceiling partitions are part of Architectural / Structural drawings and specifications.

G. Fittings secured to structural ceiling to accommodate hangers for foodservice equipment are part of Structural drawings and specifications.

H. The forming of architectural enclosures, floor, wall openings or recesses for foodservice equipment are part of Architectural / Structural drawings and specifications.

I. Caulking and sealing of Cold Storage Room floor sections to building floor are part of architectural drawings and specifications.

J. Finish floors (masonry or poured-in-place) in cold storage rooms, concrete curbs and pads are part of Architectural / Structural drawings and specifications.

K. All drop-in equipment to be wired with waterproof conduit.

1.5 QUALITY ASSURANCE

A. Qualifications:

1. At least 5 years' experience in this type of work. Upon request provide at least three references for jobs of similar size and content.

2. Commercially manufactured equipment is not acceptable unless evidence furnished that similar equipment has been operating successfully in a minimum of three (3) installations (excluding testing laboratories, field-testing or prototypes) for at least one (1) year.

3. Commercially manufactured equipment will be reviewed based on submittal data provided on manufacturer's literature and/or manufacturers shop drawings for prime alternate or substituted items. Failure of the equipment to meet the capacity, operation, size, utility and production as submitted will result in the rejection of the equipment regardless of disclaimers. All equipment items where available to be provided as Energy Star rated and listed.

4. Custom-fabricated equipment shall be manufactured by a foodservice equipment fabricator with at least five (5) years' experience in this type of work, who has the plant, personnel, and engineering facilities to properly design, detail and manufacture high quality kitchen equipment.

B. References:

1.	ADA	-	American Disabilities Act.
2.	AGA	-	American Gas Association
3.	ANSI	-	American National Standards Institute.
4.	ASHRAE	-	American Society of Heating, Refrigerating and Air-Conditioning Engineers, Inc.
5.	ASME	-	American Society of Mechanical Engineers, Inc.,
6.	ASTM	-	American Society for Testing and Materials.
7.	BOCA	-	Building Officials and Code Administrators.
8.	ETL	-	Electric Testing Laboratory.
9.	FDA	-	U.S. Food and Drug Administration.
10.	IBC	-	International Building Code.
11.	ICBO	-	International Conference of Building Officials.

12. NBFU - National Board of Fire Underwriters.

13. NEMA - National Electrical Manufacturers Assoc.

14. NSF - National Sanitation Foundation.

15. PS - U.S. Dept. of Commerce Product Standards.

16. UL - Underwriters Laboratories, Inc.

17. USDA - United States Department of Agriculture.

C. Requirements of Regulatory Agencies:

1. NSF Compliance: Equipment subject to NSF approval shall be so labeled or shall be constructed in accordance with applicable published NSF standards.

2. Evaporators to be NSF approved; electrical components UL (or ETL) approved.

3. Electrical Equipment: Equipment shall carry UL (or ETL) approval and comply with applicable standards of the National Electric Code. Where specified, items shall be UL approved as a unit; if not so specified component electrical parts shall be approved separately. Where applicable, equipment shall comply with NEMA and NBFU standards. Where local regulations permit, a certified test report by an approved nationally recognized independent testing organization establishing proof of conformance to the standards, including test methods of UL, will be considered in lieu of UL label. All drop-in equipment to be wired with waterproof conduit.

4. Civil Authorities: Comply with ordinances, codes and regulations of civil authorities having jurisdiction at Job Site.

5. Sheet Metal Fabrication: Comply with NFPA standard No. 51: "Welding and Cutting"; and applicable NSF standards.

6. ADA Compliance: Installation and construction of equipment and furnishings to comply with the American Disabilities Act as described in the Department of Justice Register Volume 56, No. 144. Food service aisles shall be a minimum of 36” wide and tray slides shall be mounted at 34” maximum above the floor. Food service equipment required to be accessible shall conform to all reach requirements in CBC figures 11B-308.3.1 and 11B-308.3.2.

7. Install equipment in accordance with published SMACNA guidelines for a zone 4 projects.

1.6 DISCREPANCIES

A. In the event of discrepancies within the Contract Documents the Consultant, shall be so notified, within sufficient time, to verify, correct and create addendum.

B. If, in the event that time does not permit notification or clarification of discrepancies prior to the Bid Opening, the following shall apply: The drawings govern in matters of quantity, and the specifications govern in matters of quality. In the event of conflict within the drawings involving quantities, or within the specifications involving quality, the greater quantity and higher quality shall apply. No additional allowances will be made because of errors, ambiguities, or omissions, which reasonably should have been discovered during the preparation of the Bid.

1.7 ACCEPTABLE MANUFACTURERS

A. Where such term is followed in the specifications by the names of one or more manufacturer, such manufacturer may be substituted for prime manufacturer named, providing that the alternate item is equal or superior to the brand specified in terms of construction, function, efficiency, and utility. Burden of proof will be on the Contractor. The Contractor shall note such alternates in his Bid. Acceptance of Contractor's Bid does not imply acceptance of alternate items. The Contractor is responsible for any additional costs associated with changes required to building construction and utility due to alternate equipment items (i.e.: larger/smaller electrical breakers/wiring; increase in propane gas/water piping size and/or consumption).

B. All alternates of Energy Star rated / listed equipment to also be Energy Star rated or listed to be considered as equivalent.

1.8 SUBSTITUTIONS

A. Requests for substitution of equipment manufactured by other than the Prime or Alternate Manufacturers named in the specification shall be submitted prior to bid opening. Such items will be reviewed and accepted or denied during the bidding period only and accepted or rejected on the basis of equality to the prime equipment specified.

B. Contractor Must: Submit full descriptive and technical data, test results in detail, and samples, if requested, to be received by the Architect in accordance with Division 1 Specifications.

1.9 SUBMITTALS

A. All submittals to be provided in electronic PDF format. Minimum sheet size for all shop drawings to be 24”x36”.

B. Submittals to be provided in the following sequence. 1-Underground utility penetration MEP plan; 2-Itemized equipment cutsheets; 3-Manufacturers shop drawings (hoods, walk-ins, refrigeration systems or other); 4-MEP Rough-in Shop drawings and 5 -Custom fabricated equipment (counters/tables etc.) shop drawings.

C. Product Data:

1. Equipment Brochure:

a. Provide list of equipment items with item number, manufacturer, and Model No. and quantity in front of product data books.

b. Form: Print item number clearly in upper right hand corner of each sheet; show manufacturer's name; model number; options, alternates, or attachments, electrical

and mechanical data, and valves, regulators, controls, and devices provided. If no printed data exists, submit required information on manufacturer's drawing(s) in form described below for Shop Drawings; insert reference sheet in brochure in number sequence referring to item number, manufacturer, and drawing number. Include Company's name and address, project name, and submittal date on brochure cover.

D. Shop Drawings: Submit the following along with equipment brochures:

1. Floor Plans: No less than 1/4” to 1’-0” scale. Include itemized equipment layout(s), equipment schedules, and rough-in plans. Reproductions of Contract Documents for purposes of shop drawing preparation are not acceptable.

2. Rough-In Plans: Include mechanical and electrical equipment requirements, including Owner, By Other, By Vender, etc. furnished equipment. Identify connection points and identify and dimension rough-in points (including those presently sleeved, if) with both vertical (above finished floor), and horizontal dimensions from column centerlines or exterior walls. Detail and dimension structural recesses and depressions required for equipment provided.

3. Shop Details: FSEC/Fabricator is required to provide shop drawings for approval by consultant, prior to fabrication. Scale: not less than ¾” to 1’-0”, larger where required for clarity. Show plans, elevations, sections and details of equipment as required to indicate arrangements, construction, and connection with other Work; Kinds, types, grades, thickness and finishes of materials; reinforcements, joints, bracing, supports, and anchorage; and method of installation. FSEC/Fabricator to coordinate fabrication/installation of counter with equipment items that are to be dropped into top, roll under and be attached to/through counter (sneeze guards, cooking equipment, etc.). Note: All fabrication drawings that are a combination of multiple fabricated or custom manufactured components/items are to be provided as one shop drawing, no exceptions. All fabrication shop drawings are to indicate equipment cut-out requirements/dimensions. Shop drawings to include multiple sections through counter/equipment/sneeze guards (provide minimum (3) three sections serving counter). All drawings to show, at a minimum in plan view, the equipment items (below) (counters, etc.) that are covered by the sneeze guard. Side views to indicate compliance with NSF codes for sneeze protection.

4. Backing Drawings: Submit separate drawings locating architectural backing required to support equipment. Dimension in plan, elevation, and (where required) in section. Show maximum load factors for each item requiring wall, ceiling, or special floor support.

E. Certificates: Provide certifications of compliance with requirements of governing regulatory agencies.

F. Operating and Maintenance Data:

1. Refer to the following and Division 1 specification requirements.

a. Inventory List: Before final payment, submit an "as-built" list of equipment provided indicating item number and name; manufacturer and model, where applicable; and item price. Include extra equipment, if, ordered during the progress of the Work.

b. Mechanical Refrigeration: After installation, submit an “as-built” diagram of refrigeration piping system including location, manufacturer and model number of gauges, valves, shock absorbers and devices.

2. Service Agencies: After award of a contract, submit a list of names and addresses of service agencies to be used on the project. Agencies shall be approved by the Owner Representative and shall be from the jobsite area or within a 150 miles radius from the project.

3. Nameplates: Provide permanently affixed, corrosion resistant nameplate, proportionate to size of fixture, bearing manufacturer's name, model and serial numbers, and ratings and characteristics for servicing and maintenance, where applicable, on each item of equipment.

4. Operating and Maintenance Manuals: Upon substantial completion of project, provide completed, bound manuals for each applicable item of equipment provided. Include operating and maintenance instructions/diagrams, wiring diagrams and replacement parts lists/diagrams. Provide list of serial numbers corresponding to each Item Number in the front of each manual.

G. As-Built Shop Drawings: Submit the following at project completion.

1. As-Built/Constructed equipment Floor Plans: No less than 1/4” to 1’-0” scale. Include itemized equipment layout(s), equipment schedules, and rough-in plans.

2. Rough-In Plans: Include mechanical and electrical equipment requirements, including Owner, By Other, By Vender, etc. furnished equipment.

3. Drawings to include incorporation of all provided responses to RFI’s, change requests or/and any other changes incorporated in the field documented or

1.10 PRODUCT DELIVERY, STORAGE AND HANDLING

A. Delivery of Equipment:

1. Coordinate delivery with proper schedule and jobsite conditions.

2. Deliver equipment in manufacturer's original packaging, clearly identified as to product, manufacturer, and Item Number corresponding to numbers in the itemized specification.

3. Where possible, deliver each item of equipment in one (1) piece. If not possible, assemble equipment in the building in accordance with workmanship standards specified herein.

B. Storage of Equipment:

1. Store equipment in protected areas, in manufacturer's original packaging where possible, in such a way as to prevent damage to equipment and finishes, and to the structure. Damaged or defective materials and equipment shall be replaced at no cost to the Owner.

1.11 SITE CONDITIONS

A. Examine appropriate existing job site areas and notify Owners Representative if conditions exist which will impede, inhibit, or prevent the contractor from completing the Work. In the absence of such notification it will be assumed that no such conditions exist.

B. Verify site conditions and dimensions prior to production of all equipment items, notify GC of any conditions that affect ability to complete scope of work. Any fabricated/buy-out equipment items that are to abut and be sealed to walls must not have any gaps greater than 1/8” – if gaps exceed dimension the GC and Design team can reject and or accept on a condition by condition bases. All costs associated with replacing improperly provided equipment items is the responsibility of the kitchen equipment contractor.

1.12 COORDINATION

A. Coordinate work as part of this phase, including but not limited to Mechanical, Electrical and Foodservice Equipment Installation. Do cutting, drilling, and fitting in equipment necessary to accommodate work of mechanical and electrical connections.

1.13 WARRANTIES

A. Work shall be guaranteed against defects for one (1) year from the date of operation of the equipment. Guarantee shall cover replacement of every particular piece of defective material, including transportation, installation and labor, but shall exclude replacement cost of damaged parts or work caused by carelessness or misuse of the equipment. If the contractor fails to respond to written notification of warranty item within 10 days, the Owner may then have the defects and/or problem corrected at the contractor’s expense.

B. In addition to the standard warranties, for equipment, guarantees or warranties offered by manufacturers or contractors in excess of the standard warranties (for example, 5-year warranties on motor-compressors) shall be consigned to and deemed to run to the benefit of the Owner.

PART 2 - PRODUCTS

2.1 MANUFACTURED EQUIPMENT

A. General: Equipment so identified refers to Item bearing a manufacturer's name and/or model number. Such standard materials, components, and features normally furnished for that model, whether noted or not, are inherent in the specification.

B. Utility Requirements: Major deviation from the utility requirements shown or specified, resulting either from change of model or manufacturer, or from submitted alternates, shall be clearly

indicated on the submittals. Additional costs incurred, as a result of a failure to do so shall be borne by the general contractor.

C. Sanitation: Manufactured equipment shall be either sealed to walls, with no openings or crevices between wall and equipment, or shall be installed the proper distance from wall, as required by NSF. Wall shelving shall be 1" minimum from wall or sealed thereto.

2.2 MATERIALS

A. General: New and first grade. See also various types of equipment, e.g., Sheet Metal Work.

B. Metal:

1. General: Metal gauges specified are minimum and refer to U.S. Standard Gauge for sheets and plates and to Stub Gauge for tubular material. Gauges established after polishing in accordance with ANSI standards.

2. Stainless Steel: ASTM A167, type 304, 18-8, No. 2D finish on totally concealed surfaces, No.4 finish elsewhere.

3. Galvanized Steel: ASTM A525 with G90 galvanized (1.25 Commercial) coating, stretcher-leveled, bonderized, and re-rolled for smooth surface. Galvanized edges for protection equal to finished surfaces.

4. Steel shapes and angles: ASTM A36.

5. Metal Tubing and piping: Seamless or welded, of true roundness or square. Seamless tubing: annealed, pickled, and ground smooth. Welded tubing: heat-treated and quenched to eliminate carbide precipitation, drawn true to size and shape, ground smooth.

6. Chrome-Plating ASTM spec A166-45T, Class A, or ordinary finish.

C. Galvanizing Repair Compound: USDA approved and UL listed (components), "Z.R.C. Cold Galvanizing Compound", or General Electric "Silastic".

D. Sound Deadening: Under sheet metal tops apply sprayable, non-combustible cellulose fiber material "Catalog number K-13", type "A", National Cellulose Corporation, or equal.

2.3 NOT USED

2.4 FABRICATION, STAINLESS COUNTERS, STAINLESS TABLES

A. General: The following standards apply to new construction and to modification of existing equipment:

1. Welding: Heliarc or electric arc method, welding rod of same composition as parts welded. Joints finished smooth, polished, and regrained. No weld visible on exposed surface. Welding shall be non-toxic on surfaces exposed to unpackaged food. Provide

continuously welded joints for fixture tops, shelves, face joints in base cabinets, field joints and others where required.

2. Finishing: No depressions, warpage, burns, brake bend marks, burrs, fins, or irregular projections. Welds on galvanized steel: grind smooth, clean, and coat with acceptable galvanizing repair compound. No tinning. Painted galvanized surfaces: remove film with phosphoric acid or similar solution: apply wash primer surface preparation coat; color as selected. Brass surfaces: Apply clear lacquer finish to brass fixtures after fabrication.

3 Sanitation: Close hollow sections in fixtures by continuous welding. Cove horizontal and vertical intersections of sheet metal 5/8” radius, minimum, unless otherwise specified. Install fabricated equipment, with relation to the wall, as described above for manufactured equipment, including wall shelves.

4. Fastenings: Where possible, no exposed bolt, screw or rivet heads. Bolts and screws: Acceptable concealed type, corrosion-resisting steel same composition as metal surface. Where concealed fastenings not possible: stainless steel countersunk, of flat or oval head design. All-American Standard Unified thread design. Threads visible or accessible capped with lock-washers and chrome plated brass or bronze acorn nuts. Others capped with standard lock-washer and steel nut.

5. Catalog Items: Construction standards herein apply to custom-fabricated equipment. Where similar items are referred to by manufacturer and model number, the manufacturer's standard construction as published in the literature (unless modified within the specification) shall be considered the construction standards for that item.

B. Construction Standards:

1. Work tops: 14-gauge stainless steel. Lower edges of tops 3/4” minimum from table framing. Tops at 34” from finished floor unless otherwise specified. Backsplashes: At walls or higher fixtures, formed of same piece as top with 1” return standard, 2-1/2” minimum where piping or conduit required. Form as detailed. Seal top to wall with clear silicone sealant. Close ends with continuously welded fillers of same material. See "Materials" for sound deadening. All tables to be installed to walls using Z-clips.

2. Three compartment utensil sinks: 12 gauge stainless steel tops.

3. Reinforcing: Weld to underside of tops, 14-gauge steel hat sections or channels, full perimeter with cross members at 36” O.C. maximum. Concealed framing (in enclosed cabinets or behind turned down edges): galvanized steel. Exposed framing: stainless steel.

4. Aprons: Material specified. Weld to underside of fixture top framing. Bottom edges turned back 1/2” on obtuse angle. Form corners on radius around legs.

5. Open bases: Provide 1 5/8” inch O.D. x 16 gauge stainless steel tubular legs fitted at top to tubular, fully enclosed, slip-fit, reinforced leg sockets welded to table framing and at

bottom to stainless steel adjustable "bullet" type feet. Pins and floor flanges, where specified: stainless steel, welded to feet. Legs connected by cross rails, same material and finish, except where shelves are located, or where front access is required for bins. Rails at 10” O.C. above floor, unless otherwise shown. Provide four (4) legs for tops up to 84” long, six (6) legs for larger tops.

6. Rolled Edges: Rolled edges shall be as detailed, with corners bullnose, ground and polished.

7. Coved Corners: stainless steel Foodservice equipment shall have 3/8” or larger radius coves in horizontal and vertical corners and intersections per N.S.F. standards.

8. Closures: Where ends of fixtures, splashback, shelves, are open, fill by forming the metal, or weld sections, if necessary, to close entire opening flush to walls or adjoining fixtures.

9. Undershelves, Open: 16-gauge stainless steel. Square down free edges, notch around legs, continuously weld. Turn up edges abutting walls or fixture 2 inches minimum and hem back. Reinforce underside as for tops.

10. Draintables:

    a. General: 14-gauge stainless steel. Pitch to drainage point 1/4” per lineal foot with 1-inch maximum pitch. Low point of top: 34” from floor. Secure and make watertight connections to warewashing machines. Free edges standing rolled type unless otherwise specified, other edges formed into backsplashes as specified for worktops. Continuously weld disposer cones to table. Reinforce top as above for worktops, with additional lateral members on each side of cone. Mount on open bases unless otherwise specified. Drainboards more than 24” long shall be leg supported.

    b. Standing rolled edges: Turn up at 90 degrees, roll outward and downward 180 degrees on 1-1/2” inch minimum outside diameter. Outside corners rounded on 2” radius. Top of roll; 37” from floor, 3-inches maximum from drain table top.

11. Sinks:

    a. General: 14-gauge stainless steel, fully coved, continuously welded. Pitch sink bottom to die formed drain opening, depressed below sink bottom. Continuously weld sink bowls to fixture tops. Specified sink depth measured from adjoining surface or, if freestanding, from 34” inches from floor. Provide faucets and drain fittings as specified.

    b. Multiple-compartment sinks: Space bowls a minimum of 2” apart. Top closure 14-gauge stainless steel continuously welded to sink bowls, rounded on 5/8” radius minimum. Weld two (2) 1/2” diameter stainless steel rod spacers between each bowl 2” from bottom, one (1) each at front and rear. Scullery and vegetable washing bowls shall be leg-supported. Weld 16-gauge stainless steel, full height closure panel across front and ends of sink bowls, construction vermin-proof, NSF

approved. Scullery and vegetable washing sinks are to be integral with the body. Welded in sinks not acceptable.

12. Counter-Mounted Equipment (Electrical/Mechanical):

    a. General: Install built-in equipment neatly and tightly in accordance with manufacturer's instructions; no crevices or gaps acceptable. Install wiring and piping for all elements, controls, and fittings within counter to accessible junction point. Conceal lines and fittings in base cabinets, tubular uprights, raceways. Where required, cut holes in counter tops for wiring and piping, and install rubber grommets for cords. All foodservice equipment with remote controls or exterior wiring to be installed with liquid-tite.

13. Elevated Shelves:

    a. General: 16-gauge stainless steel, free edges squared-down as for undershelves, unless otherwise shown. Turn up edges abutting walls or other fixtures 1” minimum and crimp back for tight fit. Close free ends. Mount at 18” above work surface unless otherwise shown. Reinforce underside of shelves 14” deep or greater.

    b. Wall Shelves: Stud or tack-weld to 12-gauge stainless steel cantilever brackets. Secure brackets to wall rigidly on 36” 0-inches centers, maximum.

C. Manufactured Components (Unless specified otherwise):

1. General: Provide the following items, or approved equivalents, for installation in custom-fabricated equipment where applicable at all sinks etc.

2. Faucets:

    a. General: Removable-cartridge type, with polished chrome finish, and fitted with aerators, as manufactured by Chicago, Inc., or equivalent models by Fisher Faucet.

    b. Swing Spout, Standard: Deck-or-splash-mounted, as shown. For sinks 30 Gal. or larger: Chicago #540-LD-L9 with 3/4” NPT inlets: for smaller sinks: Series B-230 with 1/2” NPT inlets. Nozzle lengths equal to one-half width of sink or as specified and shown.

    c. Provide deck or splash mounted pre-rinse at pre-rinse sink, Chicago #919 or 510GC with wall bracket.

3. Drain Fittings:

    a. Twist-handle type: Box pattern drains with heavy duty, stainless steel removable basket assembly, twist-handle waste outlet, and one-piece connected overflow assembly, by Component Hardware Group, Inc., or equivalent model by Klein Hardware. For sinks between 20 Gal. & 30 Gal., provide Model No. D63-4591; less than 20 Gal., provide Model No. D53-7215. Centerline of overflow connection 2” below sink top. Weld 12-gauge stainless steel strap lever support to underside

of sink at front, if required. Lever handle to be installed aligned with front edge of sink bottom.

2.5 FABRICATION - MILLWORK

A. General: The following standards apply to new construction.

B. Counter Bodies: Furniture grade 3/4 inch plywood with blocking. Exposed surfaces shall be plastic laminated, (color/pattern as selected by Architect). Construction shall be suitable for a Foodservice environment.

C. Finishes: As specified by Architect.

D. Fastening: No exposed bolts, nails or screws will be acceptable in counter or cabinet construction.

E. Laminated Plastic:

1. Shall be LaminArt, unless otherwise specified by Architectural Drawings or Specifications.

2. Shall be veneered with approved waterproof and heat proof cement. Rubber base adhesives are not acceptable.

3. Exposed faces and edges shall be faced with 1/16 inch thick material. Corresponding backs shall be covered with approved backing and balancing sheet material.

F. Components:

1. Legs: Tubular stainless steel with adjustable feet or as specified/detailed.

2. Hardware: Cabinet door hardware as specified by Architect.

3. Locks: All cabinet doors to be provided with locking mechanisms as required – Cylinder locks as manufactured by CHG.

2.6 COLD STORAGE ROOMS

A. Not applicable to this project.

2.7 MECHANICAL REFRIGERATION SYSTEM

A. Not applicable to this project.

2.8 EXHAUST HOODS

A. Stainless steel construction. See shop drawings for size and location of ducts.

B. Provide stainless steel closure panels above hood to finished ceiling, or stainless steel angle trim at hood if directly below ceiling, verify height.

C. Lights per shop drawings.

D. Supply wall flashing; unless specified otherwise.

E. Provide fuse-linked fire dampers in exhaust and make-up air duct collars, if required. Verify with Fire Marshal.

F. Hoods to utilize a wet chemical Fire Suppression System.

G. Bottom of hood to be mounted as delineated in itemized specification.

2.9 FIRE PROTECTION SYSTEM

A. The fire protection system shall conform to applicable code requirements including but not limited to NFPA and UL 300.

B. Provide surface appliance, hood and duct protection nozzles per equipment shown.

C. Exposed piping to be chrome plated or sleeved. Run unexposed wherever possible.

D. Provide manual pull station as located on drawings with two (2) sets of normally open/close contact points.

E. Coordinate shunt-trip circuit breaker coil voltage and interface requirements.

F. Coordinate solenoid operated gas valve coil voltage and interface requirements.

G. Upon completion the system must be tested in the presence of the City Fire Marshal.

H. Permit and testing to be included in scope of work provided as part of section 11400.

I. Provide Automan for use with single ducts on multiple hoods.

J. Provide durable plastic maps/legends/signs at each manual pull station and for each system to show the effected hoods. Provide training for the cooks and maintenance staff as to how the system works.

PART 3 - EXECUTION

3.1 PREPARATION

A. Field Measurements: Prior to fabricating, ordering, or delivering equipment verify essential measurements at the Work Site. Verify mechanical and electrical conditions having bearing on the work, as well as pertinent existing equipment and architectural conditions. Make every effort necessary to clarify conditions not accessible to visual examination. Any fabricated/buy-out equipment items that are to abut and be sealed to walls must not have any gaps greater than 1/8” – if gaps exceed dimension the GC and Design team can reject and or accept on a condition by condition bases. All costs associated with replacing improperly provided equipment items is the responsibility of the kitchen equipment contractor.

B. The kitchen equipment contractor is responsible to locate all equipment in the field for installation by themselves or any of their subcontractors – this includes both buy-out and

custom fabricated equipment items. Contractor to coordinate installation with installed rough-ins and make any adjustments required to equipment to accommodate.

3.2 INSTALLATION

A. Cutting and Welding Operations: gas operated cutting and welding equipment and operations shall be in strict accordance with the National Fire Protection Association Standard No. 51.

B. Standards: Comply with NSF standards in methods of installing, mounting, and securing equipment.

C. Trim: Where separate fixtures abut each other as in a battery of cooking equipment, join, seal, and fit with matching trim strips to eliminate crevices. Where fixtures penetrate or abut walls, fit wall edges with trim molding, of matching material, to close spaces between fixture and building structure. At wall penetrations mount fixture on enclosed channel base of similar material to close spaces, where specified.

D. Irregular Surfaces: Where fixture abuts curved or irregular surfaces or angles, or projecting wall corners, fixture shall conform to such surfaces.

E. Metal Bases: Set bases in solid, full-perimeter bed of sealant. If space exceeds 1/4” at point, provide a continuous, full-height scribe strip of matching material to conceal gap.

3.3 FIELD QUALITY CONTROL

A. After installation, test mechanical and electrical equipment including, but not limited to refrigeration systems, and in general valves, regulators, tubing, wiring, piping, connections, gauges, safety devices, sensors, and other devices required for the proper operation of the equipment, for operating efficiency and conformance to requirements specified. Test and re-test until equipment is properly operating.

B. Manufacturer's representative Field Service: Representatives of the Food Service Equipment and Accessory manufacturers shall make inspections prior to start of installation, during installation and upon completion of installation to ascertain that the entire system(s) has been installed according to manufacturer's specifications and approved details.

3.4 ADJUSTMENT AND CLEANING

A. Perform fitting, joining, leveling, fastening, scribing, sealing, and adjusting of fixed equipment; depot mobile and portable equipment as shown. Do cutting, drilling, and fitting in equipment necessary to accommodate work of mechanical and electrical trades.

B. Cleaning: Remove from equipment stains, paint spots, protective wrappings, coatings, tapes, grease, oil, plaster, dust, polishing compounds, rust, and other foreign substances.

C. Touch-up: After installation, damaged, stained, or otherwise disfigured portions of the work shall be touched up, refinished, or replaced to the satisfaction of the Owners representative.

3.5 DEMONSTRATION/COMMISSIONING

A. Prior to final acceptance, KEC is to schedule and provide for factory authorized representative or service agent to demonstrate and instruct operating personnel in the uses and maintenance of all equipment provided – No exceptions. In the case of complex equipment, demonstrations shall utilize videotapes as provided by the manufacturers. Such equipment shall include but not be limited to major cooking equipment; exhaust ventilation systems, food processing equipment (such as cutters, mixers, slicers); warewashing equipment; and complex control, monitoring, and alarm systems. Provide RAS with schedule of start-up and demonstrations.

B. Process of commissioning of equipment to include the following:

1. Factory authorized representative or service agent to verify that all utility connections are complete and proper per manufacturer's requirements and specifications.

2. All equipment to be started up and tested for proper operation by the factory authorized service agent or representative. Start-up and testing done by the G.C. does not constitute acceptance by Owner, owner's representative and/or design team.

3. At time of start-up a commissioning form is to be completed and signed by the factory representative or authorized service agent that has performed the work. Form to indicate date, time, name and company name of representative, equipment item # and description, duration of visit, and names of staff equipment demonstrated to. Contact RAS Design for copy of form to be completed.

4. Refer to coordination and commissioning list on FS0.0.

3.6 PROTECTION

A. Not applicable to this project.

3.7 ITEMIZED EQUIPMENT DESCRIPTION

A. Refer to all FS Drawings as they are inclusive as the construction documents and therefore pertinent with this specification to the details of this contract. In the event of a conflict, the greater quality of the two in conflict shall apply.

B. Refer to contract document drawings for quantities required, general notes, utility load requirements etc.

C. Provide ADD Alternate for seismic installation per SMACNA Guidelines.

D. Provide allowance for providing and installing "Posi-Set" Caster Placement devices as manufactured by Dormont at all portable/mobile cooking equipment items, below exhaust hoods. Install only if required by Fire Marshal.

E. Contractor is required to list name of intended custom fabrication company at time of bid.

END OF SECTION

This page intentionally left blank

Table of Contents

OVEN, CONVECTION, ELECTRIC, WITH STEAM - MOFFAT E32D5 (ITEM 1) 1

OVEN, RETHERM AND HOLD - CRES COR RO151FWUA18DE (ITEM 2) 4

EXHAUST HOOD - STREIVOR INC. REFER TO SHOP DRAWING (ITEM 3) 7

TRIM, CLOSURES, & WALL FLASHING - STREIVOR INC. CUSTOM (ITEM 4) 8

FIRE SUPPRESSION SYSTEM - ANSUL FIRE PROTECTION R-102 (ITEM 5) 9

NOT USED - - - (ITEM 6-7) 14

PREP TABLE WITH SINK & DRAWERS - STAINLESS STEEL FABRICATOR CUSTOM (ITEM 8) 15

FAUCET, BACKSPLASH MOUNT - FISHER 60690 (ITEM 9) 16

DRAIN, LEVER HANDLE - FISHER 22209 (ITEM 10) 18

TRASH CAN - RUBBERMAID COMMERCIAL PRODUCTS SLIM JIM (ITEM 11) 20

CUTTER/VEG. PREP - ROBOT COUPE R2U (ITEM 12) 23

WALL SHELVING - STAINLESS STEEL FABRICATOR CUSTOM (ITEM 13) 27

HAND SINK, WALL MOUNT - ADVANCE TABCO 7-PS-55 WITH EYE WASH (ITEM 14) 28

LOCKERS - PENCO 68121R028 (ITEM 15) 30

NOT USED - - - (ITEM 16-17) 35

POT RACK WITH SHELF - STAINLESS STEEL FABRICATOR CUSTOM (ITEM 18) 36

TRASH CAN - RUBBERMAID COMMERCIAL PRODUCTS SLIM JIM (ITEM 19) 37

3-COMPARTMENT SINK - STAINLESS STEEL FABRICATOR CUSTOM (ITEM 20) 40

DRAIN, LEVER HANDLE - FISHER 22209 (ITEM 21) 41

FAUCET, WALL MOUNT WITH PRE-RINSE - T&S BRASS B-0133-CR-BJ (ITEM 22) 43

FAUCET, BACKSPLASH MOUNT - FISHER 60690 (ITEM 23) 46

POT RACK WITH SHELF - STAINLESS STEEL FABRICATOR CUSTOM (ITEM 24) 48

MOP SINK STORAGE CABINET - ADVANCE TABCO 9-OPC-84 (ITEM 25) 49

FAUCET, SERVICE SINK - FISHER 82530 (ITEM 26) 52

CHEMICAL STORAGE CABINET - STAINLESS STEEL FABRICATOR CUSTOM (ITEM 27) 55

NOT USED - - - (ITEM 28-29) 56

DRY STORAGE SHELVING - METRO BR SERIES (ITEM 30) 57

REFRIGERATOR, REACH-IN - TRAULSEN G20010 (ITEM 31) 62

FREEZER, REACH-IN - TRAULSEN G12010 (ITEM 32) 65

NOT USED - - - (ITEM 33-35) 68

MOBILE TABLE WITH DRAWER - STAINLESS STEEL FABRICATOR CUSTOM (ITEM 36) 69

CABINET, MOBILE, WARMING & HOLDING - VULCAN VBP18ES (ITEM 37) 70

MILK COOLER - TRUE MFG. - GENERAL FOODSERVICE TMC-49-S-SS-HC (ITEM 38) 73

MOBILE SERVICE COUNTER - DUKE MANUFACTURING TST-60SS WITH EXTENDED TOP (ITEM 39) 76

DROP-IN, HOT WELLS - DUKE MANUFACTURING WWG3-SB (ITEM 40) 79

MOBILE SERVICE COUNTER - DUKE MANUFACTURING TST-60SS (ITEM 41) 82

DROP-IN, HOT/COLD/FREEZE WELLS - DUKE MANUFACTURING HCF-3 (ITEM 42) 85

MOBILE SERVICE COUNTER - DUKE MANUFACTURING TST-32SS (ITEM 43) 88

POS STATION - BY OWNER NOT IN FOOD SERVICE EQUIPMENT CONTRACT (ITEM 44) 91

ITEM# 1 - OVEN, CONVECTION, ELECTRIC, WITH STEAM (2 EA REQ'D)

Moffat E32D5

Turbofan® Convection Oven, electric, full-size, single-deck, 30" assembled height, 2 speed fan, digital display time and temperature controls, electronic thermostat control, temperature range 140 - 500° F, 3-1/3" tray spacing, 1-hour cook cycle timer & 3-hour hold timer, water injection, (5) full-size sheet pan capacity, antiskid adjustable stainless steel feet, rethermalization & roast functions, stainless steel exterior, with glass door, porcelain interior, ENERGY STAR®, cETLus, NSF

UPPER UNIT
LOWER UNIT
WITH STACKING KIT AND CASTERS

turbofan®

30DSERIES

E32D5 / VH32

Technical data sheet for

E32D5 OVEN / VH32 VENTLESS HOOD ON THE SK32 STAND

Full Size Digital / Electric Convection Oven with Halton Ventless Condensing Hood on a Stainless Steel Stand

ENERGY STAR

E32D5 OVEN



STANDARD FEATURES
- 5 full size sheet pan capacity
- 3⅓"/ 85mm tray spacing
- Compact 28⅞" / 735mm width
- Digital display Time and Temperature Controls
- USB port for programs
- 30 programs with 3 stage cooking and stage end alarms
- Core Probe program cooking (optional Core Probe Kit)
- Moisture injection mode (5 levels) and manual injection
- 2 speed bi-directional reversing fan system
- 6.3kW heating (220-240V) / 5.6kW heating (208V)
- Safe-Touch vented side hinged door
- Porcelain enameled oven chamber

STANDARD FEATURES – VENTLESS CONDENSION HOOD
- Removes need for installation under canopy or ducted oven hood
- Complies with EPA202 test method for less than <5mg/m^3 grease laden effluent limits
- 3 stage filtering including charcoal odour filter
- Condensing heat exchanger for oven vent condensing and reduced heat emissions
- Self contained condensate collection – no connection to waste drain required
- Oven Hood interlock control
- Automatic 2 speed extraction fans - reduced noise/energy

VHIK32 INSTALLATION KIT
- Supplied standard with Hood
- Requires mechanical and electrical field assembly for connection of Hood to Oven

ACCESSORIES
- Optional M236060 Core Temperature Probe Kit
- Turbofan SK32 Oven Stand
- #H11715 Replacement Charcoal Filter for VH32

d

E32D5
Unit shall be a Moffat electrically heated Turbofan Convection Oven E.T.L. listed and NSF-4 listed. The oven shall have a one piece porcelain enameled oven chamber, stainless top and sides and safe touch vented easy clean side hinged door that offers field reversible hinging. Oven shall have capacity for five full size sheet pans. The oven shall be controlled by an electronic control having separate digital displays and adjusting knobs for time and temperature functions. The oven control shall allow both manual and programmed operating modes with programmable moisture level injection and 2 speed oven fan. A core temperature probe M236060 is optional. The unit shall include dual halogen oven lamps. Oven shall be able to be bench mounted on 3" / 76mm feet or mounted on oven stand model SK32. Unit shall be supplied in 100% recyclable shipping packaging. This unit shall be Energy Star certified.

SK32
Unit shall be a Moffat Turbofan stainless steel oven stand NSF-4 listed. The stand shall be constructed from stainless steel tube with castors, with front castors having dual swivel and wheel locks. It shall be fitted with 6 tray runners suitable for up to 12 half size sheet pans or 6 full size sheet pans. The stand shall be fully compatible with and support Turbofan Convection Oven models E32 and G32. Unit shall be supplied in 100% recyclable shipping packaging.

VH32
Unit shall be a Halton Ventless Condensing Hood, UL listed and UL EPH classified. The unit shall have all stainless steel construction, include 3 stage filtration and incorporate a condensing heat exchanger. Unit will feature an automatic 2 speed extraction fan with interlocked oven operation, Unit shall be 110-120V and fitted with a NEMA 5-15P cordset. Unit shall be provided with VHIK32 Installation Kit for connection and fitment to Moffat Turbofan Convection Oven model E32D5, E32T5.

VHIK32 Installation Kit
Installation Kit shall be provided with VH32 Ventless Condensing Hood. Installation kit shall include: Wire harness for oven interlock connection to oven controls. Four 4" (100mm) oven feet and condensate collection pan and housing for self-contained condensate collection. Oven rear shroud for protection of interlock control harness and condensate drain tube. Oven to stand rear securing plate when oven is fitted on a Moffat Turbofan SK32 Stand.

Halton VH Series Ventless Condensing Hoods are manufactured by Halton Company, USA, exclusively for Moffat Turbofan Convection Ovens.

MOFFAT®

turbofan®

30DSERIES

E32D5 / VH32

E32D5 Full Size Digital / Electric Convection Oven

CONTROLS
Electronic controls with Digital Time and Temperature display, Manual or Program modes
Moisture injection key (5 levels)
Thermostat range 150-500°F / 50-260°C
Timer range from 180 minutes in countdown mode
Timer range up to 999 minutes in time count mode for holding, slow cooking
Optional Core Probe temperature range 122-194°F / 50-90°C

SPECIFICATIONS
Electrical Requirements
208V, 60Hz, 1-phase, 5.8kW, 28A
220-240V, 60Hz, 1-phase, 6.5W, 27A
No cordset supplied

Water Requirements (optional)
Cold water connection ¾" GHT male
80psi maximum inlet pressure / 20psi minimum inlet pressure

External Dimensions (E32D5)
Width 28⅞" / 735mm
Height 28¾" / 730mm including 3" / 76mm feet
Depth 31⅞" / 810mm

Oven Rack Dimensions
Width 18" / 460mm
Depth 26" / 660mm

Nett Weight (E32D5)
196lbs / 89kg

Packing Data (E32D5)
231lbs / 105kg
20.1ft³ / 0.57m³
Width 29⅞" / 760mm
Height 32" / 815mm
Depth 36⅜" / 925mm

VH32 Ventless Condensing Hood

Including VHIK32 Installation Kit

CONTROLS
Illuminated Power switch
Oven interlocked control

SPECIFICATIONS
Electrical Requirements
110-120V, 60hz, 1-phase, 1.0A
NEMA 5-15P 6ft cordset fitted

Water Requirements
No water connection required

Drain Requirements – Optional
Hood water condensate can be taken to a water waste drain if desired. A 6ft / 1800mm long 3/8"OD drain hose is supplied with hood.

External Dimensions (VH32 Ventless Hood)
Width: 29¼" / 742mm
Height: 14 ½" / 368mm
Depth: 40" / 1017mm
Allow 3" / 76mm rear clearance

Nett Weight (VH32 Ventless Hood)
103 lbs / 46.5 kg

Packing Data (VH32 Ventless Hood)
125lbs / 57 kg
19ft³ / 0.7 m³
Width: 31 ½" / 800mm
Height: 21 ½" / 545mm
Depth: 44" / 1120mm

SK32 Stainless Steel Stand

All stainless steel welded frame oven stand for Turbofan E32D, E32T and G32D Series ovens
6 position tray runners standard
3" / 76mm diameter wheel swivel castors standard with 2 front castors with dual swivel and wheel
Supplied CKD for assembly on site

External Dimensions (SK32 Oven Stand)
Width 28⅞" / 735mm
Height 34⅝" / 880mm
Depth 32½" / 827mm

Nett Weight (SK32 Oven Stand)
40lbs / 18.5kg

Packing Data (SK32 Oven Stand)
51lbs / 23kg
5ft³ / 0.14m³
Width 33" / 840mm
Height 31¾" / 805mm
Depth 8¼" / 210mm

INSTALLATION CLEARANCES
Rear 2" / 50mm
LH Side 2" / 50mm
RH Side* 3" / 75mm
* For fixed installations a minimum of 20" / 500mm is required for service

CLEARANCE FROM SOURCES OF HEAT
A minimum distance of 12" / 300mm from the appliance sides is required

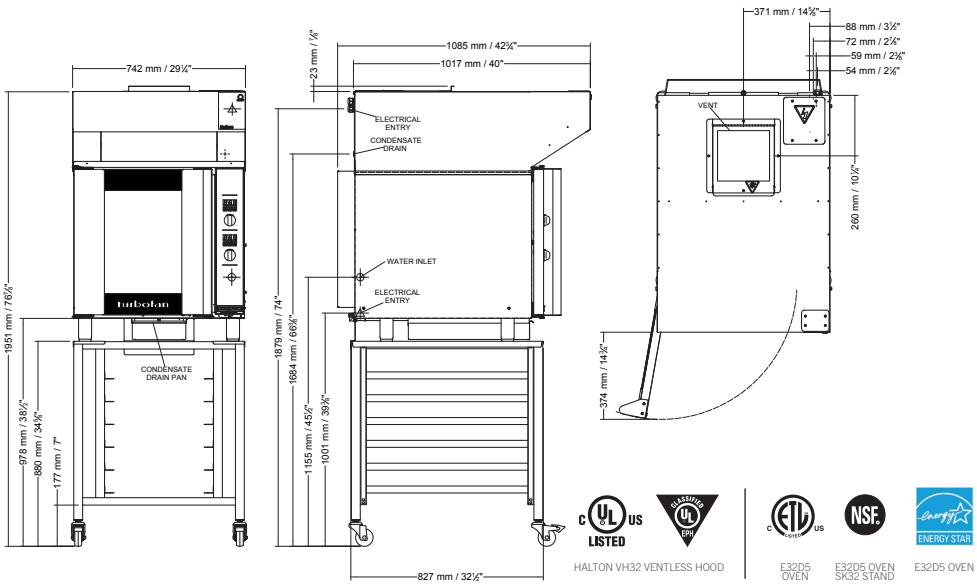

HALTON VH32 VENTLESS HOOD

E32D5 OVEN | E32D5 OVEN SK32 STAND | E32D5 OVEN

MOFFAT®
www.moffatusa.com
www.turbofanoven.com

U.S.A.
Moffat Inc
3760 Industrial Drive
Winston-Salem
NC 27105-2637
Ph Toll Free 1-800-551 8795
Ph 336-661 0257
Fax 336-661 9546
Email sales@moffat.com
www.moffatusa.com

Manufactured by:
Moffat Limited
45 Illinois Drive, Izone Business Hub
Rolleston 7675, New Zealand

ISO9001 Quality Management Standard

Designed and manufactured by MOFFAT®

ISO9001
All Turbofan products are designed and manufactured by Moffat using the internationally recognised ISO9001 quality management system, covering design, manufacture and final inspection, ensuring consistent high quality at all times.

In line with policy to continually develop and improve its products, Moffat Limited reserves the right to change specifications and design without notice.

© Copyright Moffat Ltd
US.TFN.S.2101

an Ali Group Company

The Spirit of Excellence

ITEM# 2 - OVEN, RETHERM AND HOLD (1 EA REQ'D)

Cres Cor RO151FWUA18DE

Quiktherm™ Rethermalization/Convection/Hold Oven, AquaTemp™, reach-in, full size, single cavity, (18) sets of universal angles adjustable on 1-1/2" center, fully insulated, solid state electric control convection oven, standard controls, with temp. & humidity control, LED digital display, field reversible Dutch doors, anti-microbial latches, integral drip trough, (4) heavy duty 5" swivel casters (2) braked, stainless steel construction, cCSAus, CSA

CRES COR®

JOB: _____

ITEM NO: _____

QUIKTHERM™ RETHERM OVEN
MODEL RO-151-FWUA-18D SERIES

FEATURES AND BENEFITS:

- Roast, cook, bake, rethermalize and hold with precise temperature and humidity control. Power boosting switch allows end user flexibility to increase or reduce air flow.
- Moist heat, dry heat or a combination of both allows for a variety of food preparation and holding.
- Full 8,000 or 12,000 Watts of power allows for rethermalization of prepared meals or bulk items. Maximum temperature 350˚F. (176.5˚C.).
- 1850 Watt water heater with separate control and low water indicator.
- Standard with automatic water fill system and low water indicator. LED and water heater shut off when water is at critically low level.
- Standard solid state electronic control with large, clean, easy-to-read and operate LED digital display to ensure holding at precise food temperatures and moisture content.
- AquaTemp system maintains optimum food texture through continuous monitoring of both temperature and humidity. Temperature and humidity values are measured, displayed and controlled through intuitive solid state controller. Air temperature is prioritized over humidity to ensure food safety.
- Non-venting oven, permitted by most local codes, provides easy, inexpensive installation.
- Stainless steel construction and smooth interior coved corners for ease of cleaning and to prevent food particle/grease buildup.
- Field reversible insulated Dutch doors prevent temperature loss. Silicone door gaskets for proper seal. High temperature ceramic magnetic latches for “easy open” and security during transport.
- Safety conscious anti-microbial latches protect against spreading germs. Standard with right hand hinging; left hand hinging available upon request.
- Non-corrosive stainless steel wire universal angles accommodate a large variety of pan sizes on adjustable 1-1/2" spacing. Supplied with 18 sets of angles.
- Integral drip trough on front keeps traffic area dry, safer.
- Heavy duty 5" swivel casters, two with brakes. Provides mobility when fully loaded.

POWER UNIT OPTIONS:

8000 Watts, 208 Volts, 1 or 3 Phase, 60 Hz.
8000 Watts, 240 Volts, 1 or 3 Phase 60 Hz.
12,000 Watts, 208 Volts, 3 Phase, 60 Hz.
12,000 Watts, 240 Volts, 3 Phase, 60 Hz.
12,000 Watts, 480 Volts, 3 Phase, 60 Hz.

Deluxe Models (-DX) have 18 factory or field programmed cook & hold cycles. Each programmed menu can be customized for exact time and temperature needs. Probe cooking includes one 3" food temperature probe and port.

NSF/ANSI 4

C US



RO-151-FWUA-18DE

Standard (-DE)



All Ovens come standard with easy-to-read and operate LED digital controls.

Deluxe (-DX)



Deluxe Controls are available with 18 programmable menus and 3" food probe.

ACCESSORIES and OPTIONS (Available at extra cost):

- ❑ Deluxe version with 18 programmable menus and 3" food probe (or optional 6" meat probe).
- ❑ Security Panel for Controls
- ❑ Key Lock Latches
- ❑ Extra Universal Angles
- ❑ Side and Rear Bumpers
- ❑ HACCP Documentation (built in USB port)

See page E-10 for accessory details.

aquatemp

CRES COR®
5925 Heisley Road • Mentor, OH 44060-1833
Phone: 877/CRESCOR • Fax: 440/350-7267
www.crescor.com

Scan QR code to view Spec Sheet, Operating Manual, Wiring Diagram or to call Customer Service.

If you need a QR reader visit your App Store on your Smartphone or Tablet.

Page E-4.6
Jan., 2015

RO-151-FWUA-18D SERIES

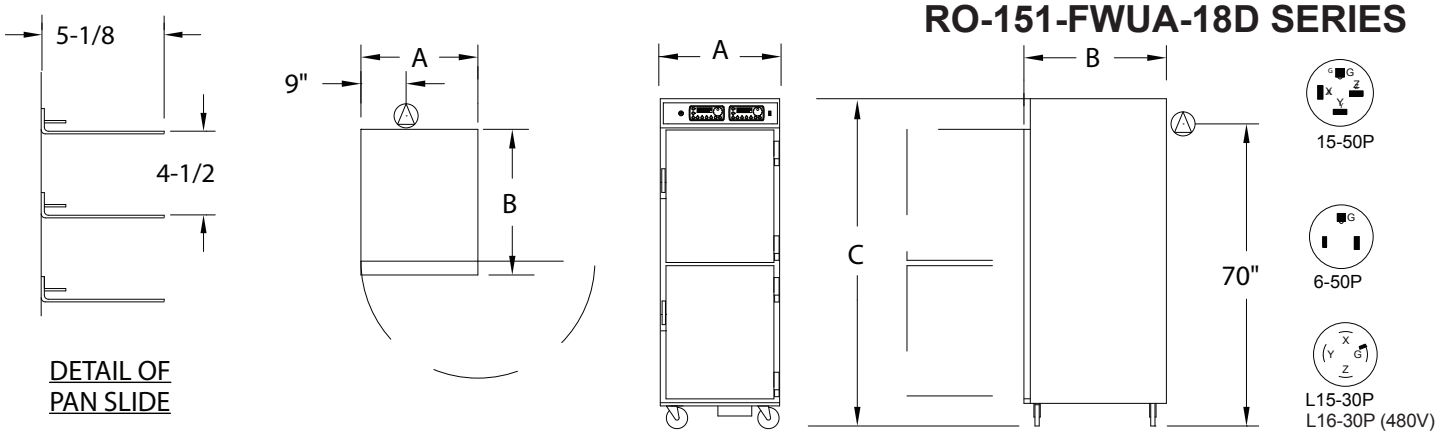

CRES COR MODEL NO.	PAN			DIM "A"	DIM "B"	DIM "C"	INSIDE DIMENSIONS				WEIGHT ACT.
	CAP/ ANGLES	SIZE		WIDTH	DEPTH	HEIGHT	WIDTH	DEPTH	HEIGHT		
RO-151-FWUA-18DE RO-151-FWUA-18DX	18 SETS	SEE NOTE BELOW	IN	28-1/4	35-1/4	73-11/16	21-3/4	26-7/8	58	LBS	392
			MM	730	960	1875	555	685	1475	KG	178

(-DE) models are standard models, (-DX) are upgraded deluxe models. See accessory sheet E-10 for more information.

NOTES: 1. Pan sizes 22" x 20" (560 x 510) Roast & Bake Pans, 10" x 20" (255 x 510) Roast & Bake Pans, 18" x 26" (460 x 660) Bun Pans, 14" x 18" (355 x 460) Service Trays, 12" x 20" (305 x 510) Steam Table Pans. Refer to Pan Size Chart at end of section.

2. When ordering bumpers, add 2" to overall dimensions.

CABINET:

- Body: 22 ga. stainless steel.
- Reinforcement: Internal framework of 18 ga. stainless steel.
- Insulation: Fiberglass, thermal conductivity (K factor) is .23 at 75˚F. 1-1/2" in doors, top, base; 2" in sidewalls.
- Air tunnels: 22 ga. stainless steel; lift-out type, mounted on sides.
- Water pan: 4 gallons; 16 ga. stainless steel with 1850 Watt heater for humidity.
- Automatic water fill hook-up under rear of base.
- Interior coved corners

BASE:

- One piece construction, .125 aluminum.
- Drip trough: Formed 18 ga. stainless steel mounted to front of cabinet; removable drip pan.
- Casters: 5" dia., swivel, modulus tires, 1-1/4 wide, load cap. 250 lbs. each, temp. range -45˚/+180˚F. Delrin bearings. Front casters equipped with brakes.

DUTCH DOORS:

- Field reversible.
- Formed 22 ga. stainless steel.
- Latches: Chrome plated steel, high temperature ceramic magnetic type.
- Hinges: Heavy duty chrome plated steel.
- Gaskets: Perimeter type, silicone.
- Pan stops: Embossed.

POWER REQUIREMENTS AVAILABLE:

- 8000 Watts, 208 Volts, 60 Hz., 1 Phase, 50 Amp. service.
- 8000 Watts, 240 Volts, 60 Hz., 1 Phase, 50 Amp. service.
- 8000 Watts, 208 Volts, 60 Hz., 3 Phase, 30 Amp. service.
- 8000 Watts, 240 Volts, 60 Hz., 3 Phase, 30 Amp. service.
- 12,000 Watts, 208 Volts, 60 Hz., 3 phase, 50 Amp. service.
- 12,000 Watts, 240 Volts, 60 Hz., 3 phase, 50 Amp. service.
- 12,000 Watts, 480 Volts, 60 Hz., 3 phase, 30 Amp. service.

PAN SLIDES:

- Stainless steel wire universal angles (.306 dia.), mounted on lift-out posts.
- 18 sets of angles; adjustable on 1-1/2" centers.

ELECTRICAL COMPONENTS:

- Thermostat (retherm/hold): Solid state digital control, 140°F to 350˚F (176.5˚C).
- Thermostat (humidity): Solid state digital control, room ambient to 95%.
- Switch: ON-OFF push button type.
- Power cord: Permanent, 8 ft., with:
  - Straight blade plug for 50A., 3Ph.
  - Twistlock plug for 30A., 3Ph.
  - Right angle straight blade plug for 50A., 1Ph.
- Heaters (6): 2000 Watts each for 12KW; 1325 Watts each for 8KW.
- Switch: (1) Air volume.
- Blower motors: (4 or 6).
- Vent fans: (3).
- Water heater: 1850 Watts.
- Fuses: (2) 6 Amp.

INSTALLATION REQUIREMENTS:

- This model complies with section 59 of UL710B for emissions of grease laden air, and according to UL is not required to be placed under a ventilation hood. Check local requirements before installation.

SHORT FORM SPECIFICATIONS

Cres Cor QuikTherm™ AquaTemp Retherm Oven Model RO-151-FWUA-18D__. 18 ga. stainless steel, recessed control panel with digital thermostat. Cabinet 22 ga. stainless steel. Stainless steel internal frame; coved corner interior. 16 ga. stainless steel 4 gallon water reservoir with automatic water fill hook-up. Fiberglass insulation in sides 2"; back, doors and base 1-1/2". 22 ga. stainless steel door, high temperature anti-microbial magnetic latches, heavy duty hinges. (18) sets universal angles for multiple pan sizes and spacing. One piece base .125 aluminum. 5" swivel modulus casters, Delrin bearings. Load capacity 250 lbs. each. _____ Watts, _____ Volts, 60 Hz., ___ Phase. 2-Year Parts / 1-Year Labor warranty. Provide the following accessories: _____ _____ _____ . CSA-US, CSA-C, CSA to NSF4 listed.

CRES COR®
5925 Heisley Road • Mentor, OH 44060-1833
Phone: 877/CRESCOR • Fax: 440/350-7267
www.crescor.com

© Crescent Metal Products, Inc. 2015 All rights reserved.

In line with its policy to continually improve its products, CRES COR reserves the right to change materials and specifications without notice.

Litho in U.S.A.

ITEM# 3 - EXHAUST HOOD (1 EA REQ'D)

Streivor REFER TO SHOP DRAWING

EXHAUST HOOD

WITH REMOTE LIGHT SWITCH

ITEM# 4 - TRIM, CLOSURES, & WALL FLASHING

Streivor CUSTOM

TRIM, CLOSURES, & WALL FLASHING

ITEM# 5 - FIRE SUPPRESSION SYSTEM (1 EA REQ'D)

Ansul R-102

Fire Suppression System

WITH REMOTE FIRE PULL

DATA SHEET

R-102 Restaurant Fire Suppression Systems

Features

- Low pH Agent
- Proven Design
- Reliable Gas Cartridge Operation
- Aesthetically Appealing
- UL Listed – Meets Requirements of UL 300
- ULC Listed – Meets Requirements of ULC/ORD-C1254.6
- CE Marked

Application

The ANSUL® R-102 Restaurant Fire Suppression System is an automatic, pre-engineered, fire suppression system designed to protect areas associated with ventilating equipment including hoods, ducts, plenums, and filters. The system also protects auxiliary grease extraction equipment and cooking equipment such as fryers; griddles and range tops; upright, natural charcoal, or chain-type broilers; electric, lava rock, mesquite, or gas-radiant char-broilers; and woks.

The system is ideally suitable for use in restaurants, hospitals, nursing homes, hotels, schools, airports, and other similar facilities.

Use of the R-102 system is limited to indoor applications or locations that provide weatherproof protection within tested temperature limitations. The regulated release and tank assemblies must be mounted in an area where the air temperature will not fall below 32 °F (0 °C) or exceed 130 °F (54 °C). The system must be designed and installed within the guidelines of the UL/ULC Listed Design, Installation, Recharge, and Maintenance Manual.

System Description

The restaurant fire suppression system is a pre-engineered, wet chemical, cartridge-operated, regulated pressure type with a fixed nozzle agent distribution network. It is listed with Underwriters Laboratories, Inc. (UL/ULC).



004215

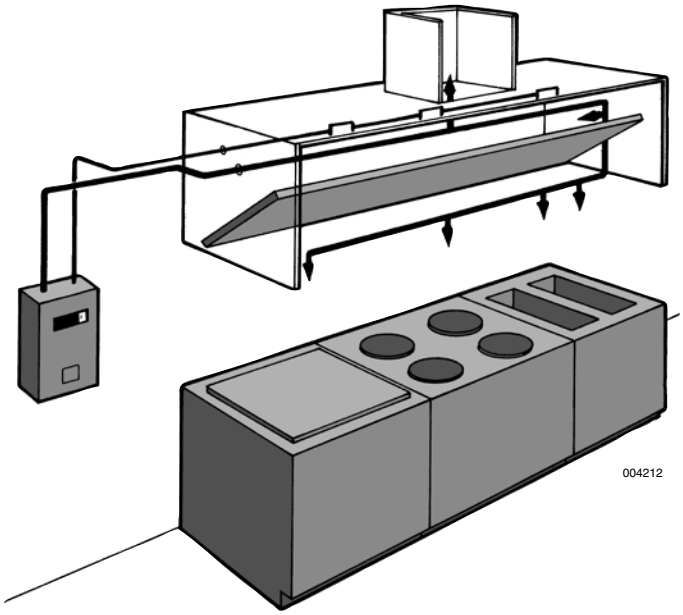

004212

The system is capable of automatic detection and actuation as well as remote manual actuation. Additional equipment is available for building fire alarm panel connections, electrical shutdown and/or interface, and mechanical or electrical gas line shut-off applications.

The detection portion of the fire suppression system allows for automatic detection by means of specific temperature-rated alloy type fusible links, which separate when the temperature exceeds the rating of the link, allowing the regulated release to actuate.

A system owner's guide is available containing basic information pertaining to system operation and maintenance. A detailed technical manual, including system description, design, installation, recharge and resetting instructions, and maintenance procedures, is available to qualified individuals.

The system is installed and serviced by authorized distributors that are trained by the manufacturer.

The basic system consists of an AUTOMAN regulated release assembly which includes a regulated release mechanism and a wet chemical storage tank housed within a single enclosure. Nozzles with blow-off caps, detectors, cartridges, agent, fusible links, and pulley elbows are supplied in separate packages in the quantities needed for fire suppression system arrangements.

Additional equipment includes a remote manual pull station(s), mechanical and electrical gas valves, and electrical switches for automatic equipment and gas line shut-off. Accessories can be added such as alarms, warning lights, etc., to installations where required.

Additional tanks and corresponding equipment can be used in multiple arrangements to allow for larger hazard coverage. Each tank is limited to a listed maximum amount of flow numbers.

tyco Fire Protection Products
One Stanton Street / Marinette, WI 54143-2542, USA / +1-715-735-7411 / www.ansul.com
Copyright © 2013 Tyco Fire Products LP. / All rights reserved. / Form No. F-2004004-08



Component Description

Wet Chemical Agent – The extinguishing agent is a mixture of organic salts designed for rapid flame knockdown and foam securement of grease related fires. It is available in plastic containers with instructions for wet chemical handling and usage.

Agent Tank – The agent tank is installed in a stainless steel enclosure or wall bracket. The tank is constructed of stainless steel.

Tanks are available in two sizes: 1.5 gallon (5.7 L) and 3.0 gallon (11.4 L). The tanks have a working pressure of 110 psi (7.6 bar), a test pressure of 330 psi (22.8 bar), and a minimum burst pressure of 660 psi (45.5 bar).

The tank includes an adaptor/tube assembly. The adaptor assembly includes a chrome-plated steel adaptor with a 1/4 in. NPT female gas inlet, a 3/8 in. NPT female agent outlet, and a stainless steel agent pick-up tube. The adaptor also contains a bursting disc seal which helps to prevent the siphoning of agent up the pipe during extreme temperature variations.

Regulated Release Mechanism – The regulated release mechanism is a spring-loaded, mechanical/pneumatic type capable of providing the expellant gas supply to one, two, or three agent tanks depending on the capacity of the gas cartridge used. It contains a factory installed regulator deadset at 110 psi (7.6 bar) with an external relief of approximately 180 psi (12.4 bar). It has automatic actuation capabilities by a fusible link detection system and remote manual actuation by a mechanical pull station.

The regulated release mechanism contains a release assembly, regulator, expellant gas hose, and agent storage tank housed in a stainless steel enclosure with cover. The enclosure contains knock-outs for 1/2 in. conduit. The cover contains an opening for a visual status indicator.

It is compatible with mechanical gas shut-off devices; or, when equipped with a field or factory-installed switch and manual reset relay, it is compatible with electric gas line or appliance shut-off devices.

Regulated Actuator Assembly – When more than two agent tanks (or three 3.0 gallon (11.4 L) tanks in certain applications) are required, the regulated actuator is available to provide expellant gas for additional tanks. It is connected to the cartridge receiver outlet of the regulated release mechanism providing simultaneous agent discharge. It contains a regulated actuator deadset at 110 psi (7.6 bar) with an external relief of approximately 180 psi (12.4 bar). It has automatic actuation capabilities using pressure from the regulated release mechanism cartridge.

The regulated actuator assembly contains an actuator, regulator, expellant gas hose, and agent tank housed in a stainless steel enclosure with cover. The enclosure contains knockouts to permit installation of the expellant gas line.

Discharge Nozzles – Each discharge nozzle is tested and listed with the R-102 system for a specific application. Nozzle tips are stamped with the flow number designation (1/2, 1, 2, or 3). Each nozzle must have a metal or rubber blow-off cap to keep the nozzle tip orifice free of cooking grease build-up.

Agent Distribution Hose – Kitchen appliances manufactured with or resting on casters (wheels/rollers) may include an agent distribution hose as a component of the suppression system. This allows the appliance to be moved for cleaning purposes without disconnecting the appliance fire suppression protection. The hose assembly includes a restraining cable kit to limit the appliance movement within the range (length) of the flexible hose.

Flexible Conduit – Flexible conduit allows for quicker installations and the convenience of being able to route the cable over, under and around obstacles. Flexible conduit can be used as a substitute for standard EMT conduit or can be used with EMT conduit.

Flexible conduit can be used only with the Molded Remote Manual Pull Station.

Pull Station Assembly – The remote manual pull station is made out of a molded red composite material. The red color makes the pull station more readily identifiable as the manual means for fire suppression system operation.

The pull station is compatible with the ANSUL Flexible Conduit.

Approvals

- UL/ULC Listed
- CE Marked
- New York City Department of Buildings
- LPCB
- TFRI
- Marine Equipment Directive (MED)
- DNV
- ABS
- Lloyd's Register
- Meets requirements of NFPA 96 (Standard for the Installation of Equipment for the Removal of Smoke and Grease-Laden Vapors from Commercial Cooking Equipment)
- Meets requirements of NFPA 17A (Standard on Wet Chemical Extinguishing Systems)

Ordering Information

Order all system components through your local authorized ANSUL Distributor.

Specifications

An ANSUL R-102 Fire Suppression System shall be furnished. The system shall be capable of protecting all hazard areas associated with cooking equipment.

1.0 GENERAL

1.1 References

1.1.1 Underwriters Laboratories, Inc. (UL)
- 1.1.1.1 UL Standard 1254
- 1.1.1.2 UL Standard 300

1.1.2 Underwriters Laboratories of Canada (ULC)
- 1.1.2.1 ULC/ORD-C 1254.6

1.1.3 National Fire Protection Association (NFPA)
- 1.1.3.1 NFPA 96
- 1.1.3.2 NFPA 17A

1.2 Submittals

1.2.1 Submit two sets of manufacturer's data sheets

1.2.2 Submit two sets of piping design drawings

1.3 System Description

1.3.1 The system shall be an automatic fire suppression system using a wet chemical agent for cooking grease related fires.

1.3.2 The system shall be capable of suppressing fires in the areas associated with ventilating equipment including hoods, ducts, plenums, and filters as well as auxiliary grease extraction equipment. The system shall also be capable of suppressing fires in areas associated with cooking equipment, such as fryers; griddles and range tops; upright, natural charcoal, or chain-type broilers; electric, lava rock, mesquite or gas-radiant char-broilers; and woks.

1.3.3 The system shall be the pre-engineered type having minimum and maximum guidelines established by the manufacturer and listed by Underwriters Laboratories (UL/ULC).

1.3.4 The system shall be installed and serviced by personnel trained by the manufacturer.

1.3.5 The system shall be capable of protecting cooking appliances by utilizing either dedicated appliance protection and/or overlapping appliance protection.

1.4 Quality Control

1.4.1 Manufacturer: The R-102 Restaurant Fire Suppression System shall be manufactured by a company with at least forty years experience in the design and manufacture of pre-engineered fire suppression systems. The manufacturer shall be ISO 9001 registered.

1.4.2 Certificates: The wet agent shall be a specially formulated, aqueous solution of organic salts with a pH range between 7.7 – 8.7, designed for flame knockdown and foam securement of grease-related fires.

1.5 Warranty, Disclaimer, and Limitations

1.5.1 The pre-engineered restaurant fire suppression system components shall be warranted for five years from date of delivery against defects in workmanship and material.

1.6 Delivery

1.6.1 Packaging: All system components shall be securely packaged to provide protection during shipment.

1.7 Environmental Conditions

1.7.1 The R-102 system shall be capable of operating within a temperature range of 32 °F to 130 °F (0 °C to 54 °C).

2.0 PRODUCT

2.1 Manufacturer

2.1.1 Tyco Fire Protection Products, One Stanton Street, Marinette, Wisconsin 54143-2542, Telephone (715) 735-7411.

2.2 Components

2.2.1 The basic system shall consist of an AUTOMAN regulated release assembly which includes a regulated release mechanism and a wet chemical storage tank housed within a single enclosure. Nozzles, blow-off caps, detectors, cartridges, agent, fusible links, and pulley elbows shall be supplied in separate packages in the quantities needed for fire suppression system arrangements. Additional equipment shall include remote manual pull station, mechanical and electrical gas valves, and electrical switches for automatic equipment and gas line shut-off, and building fire alarm control panel interface.

2.2.2 Wet Chemical Agent: The extinguishing agent shall be a specially formulated, aqueous solution of organic salts with a pH range between 7.7 – 8.7, designed for flame knockdown and foam securement of grease related fires.

2.2.3 Agent Tank: The agent tank shall be installed in a stainless steel enclosure or wall bracket. The tank shall be constructed of stainless steel. Tanks shall be available in two sizes; 1.5 gallon (5.7 L) and 3.0 gal (11.4 L).The tank shall have a working pressure of 110 psi (7.6 bar), a test pressure of 330 psi (22.8 bar), and a minimum burst pressure of 660 psi (45.5 bar). The tank shall include an adaptor/tube assembly containing a burst disc union.

2.2.4 Regulated Release Mechanism: The regulated release mechanism shall be a spring-loaded, mechanical/pneumatic type capable of providing the expellant gas supply to one or two agent tanks depending on the capacity of the gas cartridge used or three 3.0 gallon (11.4 L) agent storage tanks in certain applications. It shall contain a factory installed regulator deadset at 110 psi (7.6 bar) with an external relief of approximately 180 psi (12.4 bar).

It shall have the following actuation capabilities: automatic actuation by a fusible link detection system and remote manual actuation by a mechanical pull station.

The regulated release mechanism shall contain a release assembly, regulator, expellant gas hose, and agent storage tank housed in a stainless steel enclosure with cover. The enclosure shall contain knock-outs for 1/2 in. conduit. The cover shall contain an opening for a visual status indicator.

It shall be compatible with mechanical gas shut-off devices; or, when equipped with a field or factory-installed switch(es), it shall be compatible with electric gas line or appliance shut-off devices, or connections to a building fire alarm control panel.

Specifications (Continued)

2.2.5 Regulated Actuator Assembly: When more than two agent tanks or three agent tanks in certain applications are required, the regulated actuator shall be available to provide expellant gas for additional tanks. It shall be connected to the cartridge receiver outlet of the regulated release mechanism providing simultaneous agent discharge. The regulator shall be deadset at 110 psi (7.6 bar) with an external relief of approximately 180 psi (12.4 bar).The regulated actuator assembly shall contain an actuator, regulator, expellant gas hose, and agent tank housed in a stainless steel enclosure with cover. The enclosure shall contain knockouts to permit installation of the expellant gas line.

2.2.6 Discharge Nozzles: Each discharge nozzle shall be tested and listed with the R-102 system for a specific application. Nozzles tips shall be stamped with the flow number designation (1/2, 1, 2, or 3). Each nozzle shall have a metal or rubber blow-off cap to keep the nozzle tip orifice free of cooking grease build-up.

2.2.7 Distribution Piping: Distribution piping shall be Schedule 40 black iron, chrome-plated, or stainless steel conforming to ASTM A120, A53, or A106.

2.2.8 Detectors: The detectors shall be the fusible link style designed to separate at a specific temperature.

2.2.9 Cartridges: The cartridge shall be a sealed steel pressure vessel containing either carbon dioxide or nitrogen gas. The cartridge seal shall be designed to be punctured by the releasing device supplying the required pressure to expel wet chemical agent from the storage tank.

2.2.10 Agent Distribution Hose: An optional agent distribution hose shall be available for kitchen appliances manufactured with or resting on casters (wheels/rollers). This shall allow the appliance to be moved for cleaning purposes without disconnecting the appliance fire suppression protection. Hose assembly shall include a restraining cable kit to limit the appliance movement within the range (length) of the flexible hose.

2.2.11 Flexible Conduit: The manufacturer supplying the Restaurant Fire Suppression System shall offer flexible conduit as an option to rigid EMT conduit for the installation of pull stations and/or mechanical gas valves. The flexible conduit shall be UL Listed and include all approved components for proper installation.

2.2.12 Pull Station Assembly: The Fire Suppression System shall include a remote pull station for manual system actuation. The pull station shall be designed to include a built-in guard to protect the pull handle. The pull station shall also be designed with a pull handle to allow for three finger operation and shall be red in color for quick visibility.

3.0 IMPLEMENTATION

3.1 Installation

3.1.1 The R-102 fire suppression system shall be designed, installed, inspected, maintained, and recharged in accordance with the manufacturer's listed instruction manual.

3.2 Training

3.2.1 Training shall be conducted by representatives of the manufacturer.

ANSUL, R-102, and the product names listed in this material are marks and/or registered marks. Unauthorized use is strictly prohibited.

ITEM# 6-7 - NOT USED

- -

NOT USED

ITEM# 8 - PREP TABLE WITH SINK & DRAWERS (1 EA REQ'D)

Stainless Steel Fabricator CUSTOM

PREP TABLE WITH SINK & DRAWERS

WITH SINK COVER

ITEM# 9 - FAUCET, BACKSPLASH MOUNT (1 EA REQ'D)

Fisher 60690

Faucet, backsplash mount, 8" centers, 14" swing spout, lever handles with color coded indexes, 1/2" NPT male inlets, stainless steel, ADA Compliant

WITH 74223 AERATOR

SPEC. 61220

8" C/C BACKSPLASH FAUCET W/ LEVER HANDLES

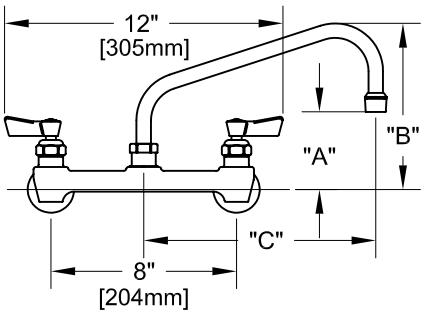

8" C/C BACKSPLASH FAUCET W/ WRIST HANDLES

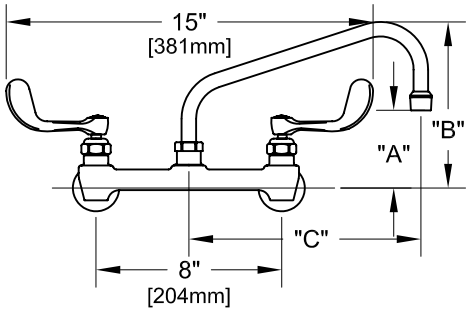

8" C/C BACKSPLASH FAUCET

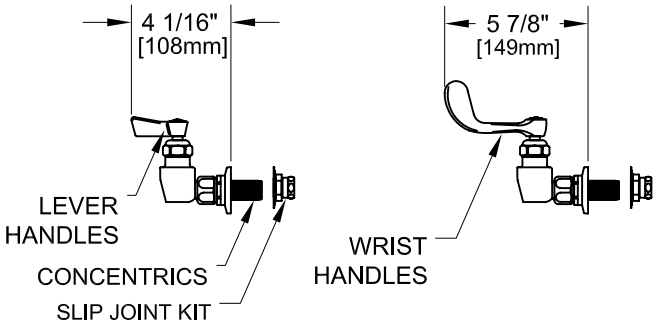

ROUGH-IN:

BACKSPLASH

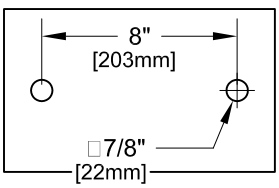

ANSI/A112.18.1-2005

PRODUCT NAME:
STAINLESS STEEL
8" C/C BACKSPLASH FAUCET

MODEL:

- ☐ 61220 W/ 6" SWING SPOUT W/ LEVER HANDLES
- ☐ 61093 W/ 8" SWING SPOUT W/ LEVER HANDLES
- ☐ 60968 W/ 10" SWING SPOUT W/ LEVER HANDLES
- ☐ 60836 W/ 12" SWING SPOUT W/ LEVER HANDLES
- ☐ 60690 W/ 14" SWING SPOUT W/ LEVER HANDLES
- ☐ 60569 W/ 16" SWING SPOUT W/ LEVER HANDLES
- ☐ 61239 W/ 6" SWING SPOUT W/ WRIST HANDLES
- ☐ 61107 W/ 8" SWING SPOUT W/ WRIST HANDLES
- ☐ 60976 W/ 10" SWING SPOUT W/ WRIST HANDLES
- ☐ 60844 W/ 12" SWING SPOUT W/ WRIST HANDLES
- ☐ 60704 W/ 14" SWING SPOUT W/ WRIST HANDLES
- ☐ 60577 W/ 16" SWING SPOUT W/ WRIST HANDLES

FEATURES

CONTROL VALVE
* 8" C/C BACKSPLASH MOUNT
* CONCENTRICS
* STAINLESS STEEL CONSTRUCTION
* SWIVELLING SEAT DISKS
* HOT SIDE STEM - RIGHT HAND
* COLD SIDE STEM - LEFT HAND
* LEVER HANDLES OR WRIST HANDLES
* SWING SPOUT

SYSTEM LIMITS
* TEMP: 40°F MIN. TO 140°F MAX.
* PRESSURE: 200 PSI MAX. STATIC
* 2.20 GPM AT 80 PSI

SHIPPING WEIGHT
* 5.0 LBS

* NSF 61-9 APPROVED & LISTED
www.truesdail.com

MODELS	DIM "A"	DIM "B"	DIM "C"
61220 61239	2-1/4" [57mm]	5-7/8" [149mm]	6" [152mm]
61093 61107	2-1/2" [64mm]	6-3/8" [162mm]	8" [204mm]
60968 60976	3-1/8" [79mm]	6-7/8" [175mm]	10" [254mm]
60836 60844	3-3/4" [95mm]	7-3/8" [187mm]	12" [305mm]
60690 60704	4-3/8" [111mm]	8-1/4" [210mm]	14" [356mm]
60569 60577	5" [127mm]	8-7/8" [225mm]	16" [406mm]

FISHER
FISHER MANUFACTURING COMPANY
TOLL FREE: 800-421-6162 - FAX: 800-832-8238
information@fisher-mfg.com - www.fisher-mfg.com

ITEM# 10 - DRAIN, LEVER HANDLE (1 EA REQ'D)

Fisher 22209

DrainKing Waste Valve, with flat strainer, 12 GPM drain rate, dual teflon seals, stainless steel ball, cast red brass body

APPLICATION:

PRODUCT NAME:

DRAINKING FLAT STRAINER

JOB NAME:

QUANTITY:

ITEM NO.:

MODEL:

- ☐ 22209 DRAINKING FLAT STRAINER BRASS
- ☐ 28932 DRAINKING FLAT STRAINER CHROME

OPTIONS OR MODIFICATIONS:

- ☐ OTHER _____

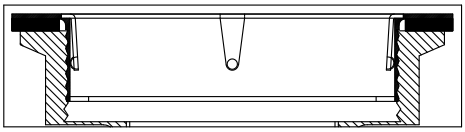

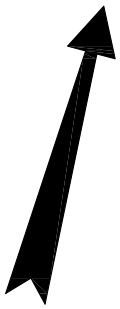

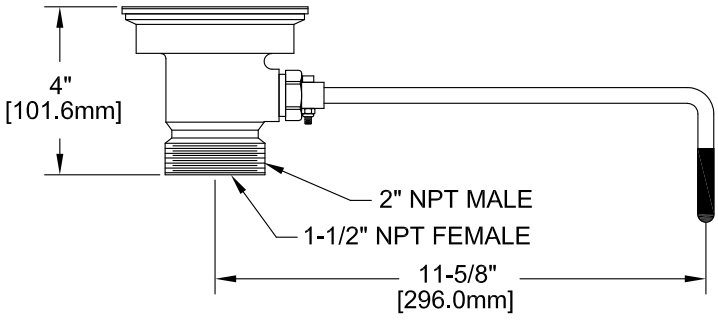

FEATURES:

* DUAL TEFLON SEALS
* STAINLESS STEEL BALL
* CAST RED BRASS BODY
* EXTRA STURDY STAINLESS STEEL CLAMPING RING
* "CLEAR THROUGH" OPENING - NO NEED TO DISASSEMBLE IF SNAKING IS REQUIRED
* INDUSTRY STANDARD "SEALING" ANGLE - FITS FLUSH TO STANDARD STAINLESS STEEL SINKS
* STAINLESS STEEL FLAT STRAINER
* 1/4 TURN FULLY OPENS AND CLOSES VALVE

DRAIN RATE:

* 12 GPM

SHIPPING WEIGHT

* 5.0 LBS

PRODUCT COMPLIANCE:

* ASME A112.18.2 / CSA B125.2

ROUGH-IN:

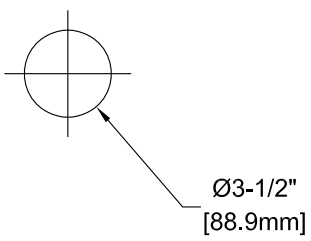

SPEC. DNWV-DNF-XXDKL

FISHER MANUFACTURING COMPANY
TOLL FREE: 800-421-6162 - FAX: 800-832-8238
information@fisher-mfg.com - www.fisher-mfg.com

ITEM# 11 - TRASH CAN (1 EA REQ'D)

Rubbermaid SLIM JIM

TRASH CAN

SLIM JIM® CONTAINERS

The Slim Jim® container delivers the durability needed for commercial environments combined with brand new innovation to increase worker productivity. New product features and accessories deliver the most efficient solution for collection, transportation, and disposal of multi-stream waste and recyclables.

Features and Benefits:

- Venting channels make removing liners up to 80% easier, improving productivity and reducing the risk of worker injury
- Four bag cinches secure liners around the rim of the container and allow for quick, knot-free liner changes
- Handles at the base and rim of the container improve grip and control while lifting and emptying full containers
- Rim with rib-strengthened design increases strength and resists crushing
- Build a recycling station with a variety of dolly and lid options to meet any facility need

COLORS AVAILABLE

Blue, Green, Black, Beige, Brown, Gray, Yellow*, Red*

* 23-gallon only

Material Composition:

Injection molded with a high-quality resin blend.

Accessories:

STAINLESS STEEL DOLLIES

- Slim Jim® Single Dolly
- Slim Jim® Double Dolly
- Slim Jim® Triple Dolly
- Slim Jim® Quadruple Dolly

RESIN DOLLY

- Slim Jim® Trainable Dolly

LIDS

- Bottles and Cans Lid
- Paper Lid
- Mixed Recycling Lid
- Hinged Lid
- Swing Lid



23-Gallon Slim Jim® Container



16-Gallon Slim Jim® Container

SLIM JIM® CONTAINERS

SKU #	DESCRIPTION	COLOR	CAPACITY		LENGTH		WIDTH		HEIGHT		PACK SIZE
			GAL	L	IN	CM	IN	CM	IN	CM	
1971258	SLIM JIM® CONTAINER	GRAY	16	61	22"	55.88	11"	27.94	25"	63.50	4
1955959	SLIM JIM® CONTAINER	BLACK	16	61	22"	55.88	11"	27.94	25"	63.50	4
1971259	SLIM JIM® CONTAINER	BEIGE	16	61	22"	55.88	11"	27.94	25"	63.50	4
1956181	SLIM JIM® CONTAINER	BROWN	16	61	22"	55.88	11"	27.94	25"	63.50	4
1971257	SLIM JIM® CONTAINER	BLUE	16	61	22"	55.88	11"	27.94	25"	63.50	4
1955960	SLIM JIM® CONTAINER	GREEN	16	61	22"	55.88	11"	27.94	25"	63.50	4
FG354060GRAY	SLIM JIM® CONTAINER	GRAY	23	87	22"	55.88	11"	27.94	30"	76.20	4
FG354060BLA	SLIM JIM® CONTAINER	BLACK	23	87	22"	55.88	11"	27.94	30"	76.20	4
FG354060BEIG	SLIM JIM® CONTAINER	BEIGE	23	87	22"	55.88	11"	27.94	30"	76.20	4
1956187	SLIM JIM® CONTAINER	BROWN	23	87	22"	55.88	11"	27.94	30"	76.20	4
1956185	SLIM JIM® CONTAINER	BLUE	23	87	22"	55.88	11"	27.94	30"	76.20	4
1956186	SLIM JIM® CONTAINER	GREEN	23	87	22"	55.88	11"	27.94	30"	76.20	4
1956188	SLIM JIM® CONTAINER	YELLOW	23	87	22"	55.88	11"	27.94	30"	76.20	4
1956189	SLIM JIM® CONTAINER	RED	23	87	22"	55.88	11"	27.94	30"	76.20	4
FG354007BLUE	SLIM JIM® CONTAINER	BLUE (RECYCLING)	23	87	22"	55.88	11"	27.94	30"	76.20	4
FG354007GRN	SLIM JIM® CONTAINER	GREEN (RECYCLING)	23	87	22"	55.88	11"	27.94	30"	76.20	4

©2016 Rubbermaid Commercial Products LLC
8900 Northpointe Executive Park Drive, Huntersville, NC 28078

ITEM# 12 - CUTTER/VEG. PREP (1 EA REQ'D)

Robot Coupe R2U

R2U READY - Commercial Vegetable Prep Machine, 3 liter stainless steel bowl with handle, vegetable prep attachment with external ejection, kidney-shaped opening, includes: (1) "S" blade (27055), (1) 2mm grating disc (27577), (1) 4mm slicing disc (27566), continuous feed, bowl attachment designed for vertical cutting & mixing, on/off & pulse switch, single speed, 1725 RPM, 1 HP, , cETLus, ETL-Sanitation

COMBINATION PROCESSOR : Bowl cutter & Vegetable prep

robot coupe

R 2 N Ultra



D	
Number of meals per service	10 to 30
Quantity per batch in cutter function	Up to 2.2 lbs
Vegetable slicer output	Up to 90 lbs/h

A SALES FEATURES

R 2 N Ultra Combination Processor: Bowl cutter & Vegetable Prep equipped with a cutter attachment for chopping, fine mincing, emulsions, grinding and kneading, and a vegetable preparation attachment for slicing, grating, ripple cut slicing, and julienne.

B TECHNICAL FEATURES

R 2 N Ultra Combination Processor: Bowl cutter & Vegetable Prep. Single phase 120/60/1. Power 1 HP. Speed: 1725 rpm. 2.9 L cutter bowl in stainless steel and smooth bowl-base blade assembly. Vegetable preparation attachment in composite material equipped with 2 hoppers : 1 large and 1 cylindrical hopper. Supplied with 2 mm (5/64") grating and 4 mm (5/32") slicing discs. Large range of 23 stainless steel discs available as option. 10 to 30 meals.

Select your options at the back page, F part.

C TECHNICAL DATA

Output power	1 HP
Electrical data	120V/60/1 - 7 Amp
Speed	1725 rpm
Dimensions (WxDxH)	8 3/4" x 15 13/16" x 19 3/16"
Rate of recyclability	95%
Net weight	27 lbs
Nema #	5-15P
Reference	R 2 N Ultra 120V/60/1

E VEGETABLE PREPARATION FUNCTION

MOTOR BASE

- Direct drive induction motor (no belt) for intensive use.
- Power1 HP
- Stainless steel motor shaft.
- Built in on / off / pulse buttons.
- **Speed**: 1725 rpm.
- **Pulse** button for better cut precision.

CUTTER FUNCTION

- **2.9 L stainless steel cutter bowl** with handle, and high resistance smooth blade assembly.

VEGETABLE FUNCTION

- Vegetable preparation attachment equipped with 2 hoppers :
  1 large hopper (surface : 12 square inches) and 1 cylindrical hopper (Ø : 2 1/4"). Removable bowl and lid.
- Removable chute and feed lead for dishwasher safe and easy cleaning.
- Vertical pusher presses on vegetables for uniform cuts.
- Large range of 23 stainless steel discs available as option.

COULIS/ FRUIT SAUCE & CITRUS PRESS FUNCTIONS:

- **Option**: Juice Extractor Kit including a coulis/ fruit sauce attachment and a citrus press attachment to prepare amuse-bouche, in-a-glass preparations, sauces, soups, sorbets and ice cream, smoothies, jam, fruit pastes...

ACCESSORIES INCLUDED

- Cutter attachment: lid and high resistance stainless steel smooth blade assembly with removable cap.
- Vegetable attachment : chute, feed lead and discharge plate.
- Supplied with 2 mm (5/64") grating and 4mm (5/32") slicing discs

STANDARDS
ETL electrical and sanitation Listed/ cETL (Canada)

ETL LISTED 54881 Conforms to UL NSF/ANSI Std 763 Std 8 Certified to CAN/CSA Std C22.2 No.195

Specification sheet

www.robotcoupeusa.com

Update : January 2018

Robot Coupe USA, Inc.
264 South Perkins - Ridgeland, MS 39157
PH: 601-898-8411 - Toll free: 800-824-1646 - Fax: 601-898-9134
info@robotcoupeusa.com

COMBINATION PROCESSOR : Bowl cutter & Vegetable prep

robot coupe

R 2 N Ultra

F OPTIONAL ACCESSORIES

- **BLADE OPTIONS**
  - Coarse serrated blade assembly for kneading and grinding, ref 27138
  - Fine serrated blade assembly for chopping herbs and spices, ref 27061
- **OTHER OPTIONS**
- Juice Extractor Kit for fruit sauces and citrus fruit juice, ref 27393
- Wall-mounted blade and disc holder: holds 1 blade and 8 discs, ref 107810

SUGGESTED PACKS OF DISCS

3 disc package	6mm (1/4") coarse grating, 6mm (1/4"x1/4") julienne and 1mm (1/32") slicing discs.
5 disc package	6mm (1/4") coarse grating, 6mm (1/4"x1/4") julienne and 1mm (1/32") slicing, 2mm (5/64") julienne and 6 mm (1/4") slicing discs.

- **OPTIONAL DISCS**



SLICING	
1 mm (1/32")	27051
2 mm (5/64")	27555
3 mm (1/8")	27086
4 mm (5/32")	27566
5 mm (3/16")	27087
6 mm (1/4")	27786



RIPPLE CUTTING	
2 mm (5/64")	27621



GRATING	
1.5 mm (1/16")	27588
2 mm (5/64")	27577
3 mm (1/8")	27511
6 mm (1/4")	27046
9 mm (11/32")	27632
Hard Cheese grate	27764
Röstis potatoes	27191
Fine Pulping Disc	27078
Pulping Disc	27079
Pulping Disc	27130



JULIENNE	
2x4 mm (5/64" x 5/32")	27080
2x6 mm (5/64" x 1/4")	27081
2x2 mm (5/64" x 5/64")	27599
4x4 mm (5/32" x 5/32")	27047
6x6 mm (1/4" x 1/4")	27610
8x8 mm (5/16" x 5/16")	27048

G ELECTRICAL DATA

120V/60/1 - delivered with cord and plug

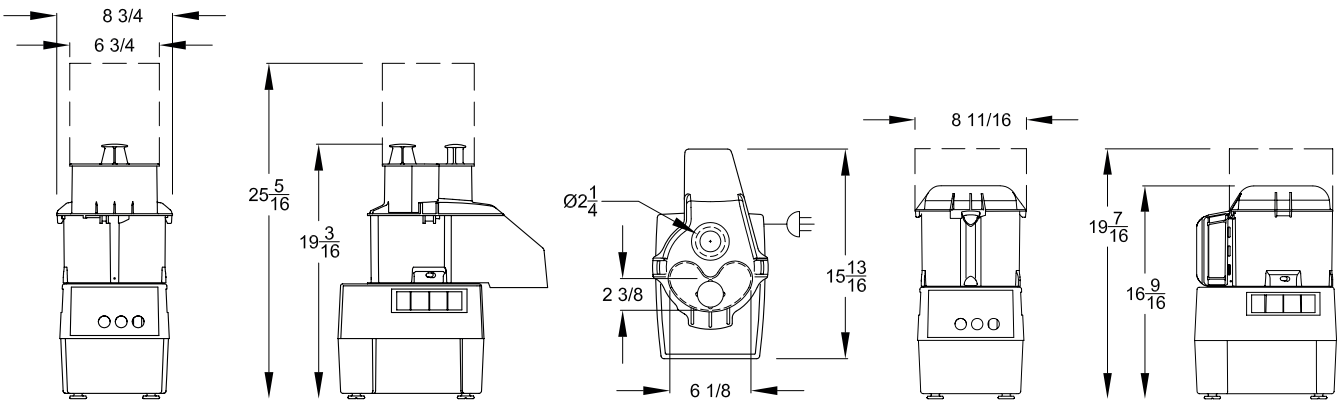

MOTOR WARRANTY 3 YEARS



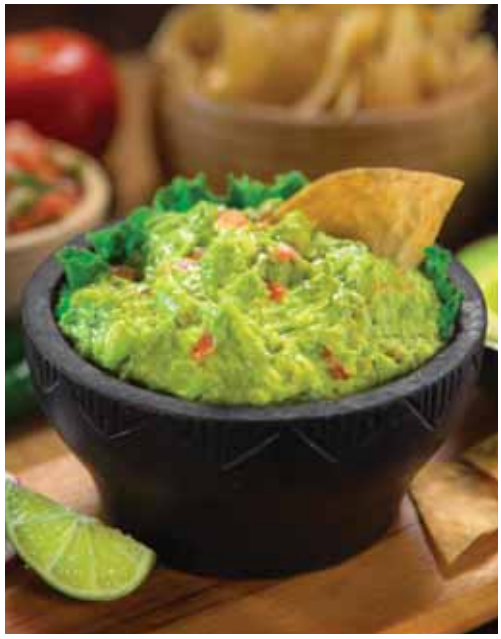





R 2 N Ultra

Induction motor	✓
Power	1 HP
Voltage	Single phase 120 V
Speed	1725 rpm
Pulse	✓
Cutter	3 L stainless steel bowl
Blade	Stainless steel smooth "S" blade - **Included**
Vegetable slicer	Half-moon hopper Cylindrical hopper Ø 2 1/4"
Discs	Included: Slicing disc 4 mm (5/32"), grating disc 2 mm (5/64")

Choose your model:

R 2 N Ultra - 2 discs	$
R2U - 120V/60/1 2 discs	

Complete disc collection page 42



Packs of discs available page 49

	Ref.	$
3 Disc Package	SP3Disc	
1 mm (3/64") Slicers; 6 mm (1/4") Grater; 6 mm (1/4") Julienne		
5 Disc Package	SP5Disc	
1 mm (3/64"); 6 mm (1/4") Slicers; 6 mm (1/4") Grater; 2 mm (5/64"); 6 mm (1/4"×1/4") Julienne		

	R 2 N Ultra	
Options	**Ref.**	**$**
Coarse serrated "S" blade **Special Grinding - Pastry**	27138	
Fine serrated "S" blade **Special Herbs & Spices**	27061	
Additional Smooth "S" blade	27055	

BACK TO SUMMARY

ITEM# 13 - WALL SHELVING (2 EA REQ'D)

Stainless Steel Fabricator CUSTOM

WALL SHELVING

ITEM# 14 - HAND SINK, WALL MOUNT (1 EA REQ'D)

Advance Tabco 7-PS-55 WITH EYE WASH

Eye Wash Hand Sink, wall mounted, 14" wide x 10" front-to-back x 5" deep bowl, 20 gauge 304 stainless steel, heavy duty splash mounted gooseneck faucet with eye wash attachment, basket drain, wall bracket

WITH 0.5 GPM AERATOR

STAINLESS STEEL

HAND SINK WITH EYE WASH STATION

7-PS-55

Conforms To NSF 61/9 Lead Free Requirements





Includes Eye Wash Attachment

Item #: _____ **Qty #:** _____

Model #: _____

Project #: _____

FEATURES:

One piece **Deep Drawn** sink bowl design.
Sink bowl is 10" x 14" x 5".
Ssink bowl has a large liberal radii with a minimum dimension of 2" and are rectangular in design for increased capacity.
Stainless steel basket drain 1-1/2" IPS.
Includes **K-170** eye wash faucet attachment

CONSTRUCTION:

All TIG welded.
Welded areas blended to match adjacent surfaces and to a satin finish.
Die formed Countertop Edge with a 3/8" No-Drip offset.
One sheet of stainless steel - No Seams.

MATERIAL:

Heavy gauge type 304 series stainless steel.
Wall mounting bracket is galvanized and of offset design.
All fittings are brass / chrome plated unless otherwise indicated.

MECHANICAL:

Faucet supply is 1/2" IPS male thread hot and cold.
Faucet Flow Rate: 1.0 GPM/3.8 LPM aerator. 60 PSI.

IMPORTANT: Faucet-mounted eyewashes require two motions to operate (turn on water, pull knob to activate eyewash flow). Therefore, **Advance Tabco does not believe that these units meet the provisions of ANSI Z358.1-2004 as eyewash units**. These units are intended solely as supplemental units in addition to dedicated, plumbed eyewash equipment installed in the workplace. Faucet-mounted eyewashes should be used with cold or warm water only. Use of hot water might cause scalding. Eyewash Faucets not to be used with Electronic Faucets.

TOL ± .500"

DIMENSIONS and SPECIFICATIONS

ALL DIMENSIONS ARE TYPICAL

7-PS-55

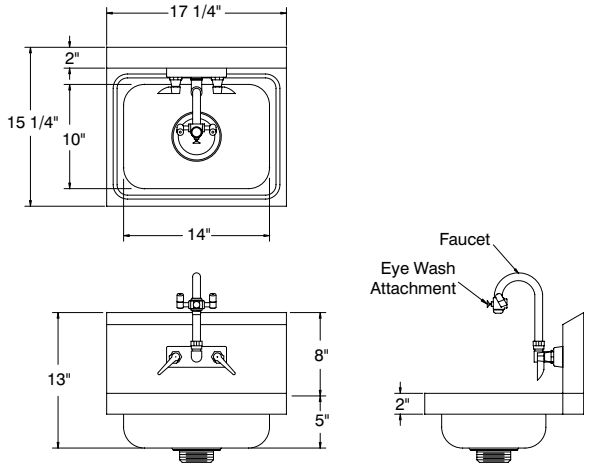

EYE WASH DETAIL

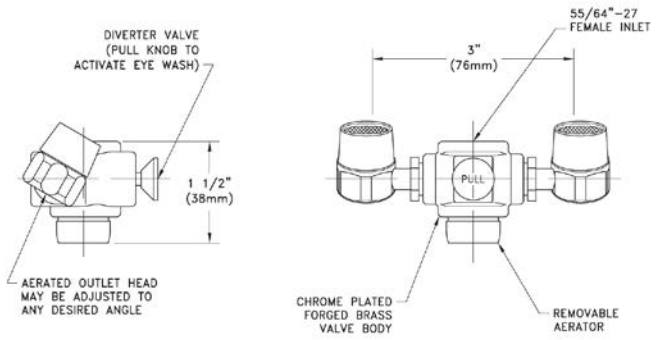

15 lbs.

⚠ **WARNING:** Equipment that includes a faucet may expose you to chemicals, including lead, that are known to the State of California to cause cancer or birth defects or other reproductive harm. For more Info., visit www.p65warnings.ca.gov.

ADVANCE TABCO is constantly engaged in a program of improving our products. Therefore, we reserve the right to change specifications without prior notice. © ADVANCE TABCO, JAN 2024 REF-B

ITEM# 15 - LOCKERS (1 EA REQ'D)

Penco 68121R028

lockers

Vanguard™

Specialty Lockers



Dual Lockers

A dual locker is a single tier locker with a vertical partition separating the area beneath the shelf into two compartments. It is ideally suited for situations where street clothes and work clothes are to be kept apart. It is generally used with lockers 15″ or 18″ wide and 18″ or 21″ deep. Guardian and Invincible II lockers can also be supplied as dual lockers.



The Executive

The Executive is a custom-outfitted 24″ wide double door locker which offers such optional personal amenities as multiple storage shelves, lockable inner storage compartment, and combination comb & brush tray with towel bar. Shown here with the available Classic III stainless steel recessed handle and optional front and end bases. Note that the depth of shelves and partitions are 3″ less than the locker depth.

It is especially appropriate for golf clubs. Other accessories available include golf ball tray, acrylic mirror and name card holder. For ordering information contact your Penco representative.

Optional Accessories



Comb & Brush Tray with Towel Bar



Card Holder



Inner storage compartment and golf ball tray

16 Person Locker

Accommodates 16 users in only 69″ of floor space. Includes a 45″ wide coat rod. Ideal for employee lockers. Accepts built-in locks or padlocks.

69″W x 18″ D x 72″H. Cat. No. 6579V



Wall Mounted Locker with Coat Rod



A practical storage unit where space is at a premium. Four private compartments with a hanging area for 16 coats. When wall mounted, the floor below is kept clear for easy cleaning (wall anchors are not included). Can also be set on counters or cabinets (without coat rod).

45″W x 18″D x 13-5/8″ H.
Cat. No. 68242



One High Box Locker

This 12″ wide individual one high box locker provides storage for personal items and features standard box locker construction with friction catch door pull. Actual overall height is 13-5/8″.

Half Height Locker, 1 Tier



Available in 30-1/2″, 36-1/2″ and 48-1/2″ heights; Available in 12″, 15″ and 18″ depths; 12″ wide. Only 48-1/2″ high lockers include a shelf for storage of books and small articles.



Box Over Lockers

Provides a compact independent lockable door above a 60″ high standard Vanguard Door. If a shelf is required in the lower compartment, it must be ordered separately.

Box Over Lockers - 72″ High		
Unit Width	Unit Depth	Cat. No.
12″	12″	6439V
12″	15″	6441V
12″	18″	6443V
15″	15″	6436V
18″	18″	6445V
18″	21″	6447V

7 and 8 Person Lockers



These efficient lockers are ideal for multiple user situations such as school gymnasium locker rooms. The box compartments (18″W x 12″H) are for permanent storage of athletic gear. When a user is present, the large locker (18″W x 60″H) is used for street clothes.

7 Person Locker			
Unit Width	Unit Depth	Unit Height	Cat. No.
36″	18″	72″	6573V
36″	21″	72″	6575V

8 Person Locker			
Unit Width	Unit Depth	Unit Height	Cat. No.
54″	18″	72″	6577V

For product listing by distribution center location, go to:
pencoproducts.com/penco-programs/quickship/

QuickShip Lockers

Lockers in 5 working days

- KD lockers ship in 72 hours
- 1, 2 & 3 Tier models have Recessed Handles
- 6" Legs standard (available with no legs by request)
- Many QuickShip accessories are available (see next pages)
- Assembly available by request
- Number plates included
- 1, 2 and 3-Wide groupings

QuickShip Vanguard 1 Tier

Grp.	Illustration	Width	Depth	Opn.Ht.*	028 Gray	073 Champagne
1-Wide		12"	12"	60"	68001R028	68001R073
		12"	15"	60"	68011R028	68011R073
		12"	18"	60"	68021R028	68021R073
		12"	12"	72"	68051R028	68051R073
		12"	15"	72"	68061R028	68061R073
		12"	18"	72"	68071R028	68071R073
		15"	18"	72"	68091R028	68091R073
		18"	18"	72"	68101R028	68101R073
2-Wide	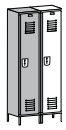	12"	12"	60"	68002R028	68002R073
		12"	15"	60"	68012R028	68012R073
		12"	18"	60"	68022R028	68022R073
		12"	12"	72"	68052R028	68052R073
		12"	15"	72"	68062R028	68062R073
		12"	18"	72"	68072R028	68072R073
		15"	18"	72"	68092R028	68092R073
		18"	18"	72"	68102R028	68103R073
3-Wide		12"	12"	60"	68003R028	68003R073
		12"	15"	60"	68013R028	68013R073
		12"	18"	60"	68023R028	68023R073
		12"	12"	72"	68053R028	68053R073
		12"	15"	72"	68063R028	68063R073
		12"	18"	72"	68073R028	68073R073
		15"	18"	72"	68093R028	68093R073
		18"	18"	72"	68103R028	68103R073

QuickShip Vanguard 2 Tier

Grp.	Illustration	Width	Depth	Opn.Ht.*	028 Gray	073 Champagne
1-Wide		12"	12"	30"	68111R028	68111R073
		12"	15"	30"	68031R028	68031R073
		12"	18"	30"	68041R028	68041R073
		12"	12"	36"	68121R028	68121R073
		12"	15"	36"	68131R028	68131R073
		12"	18"	36"	68141R028	68141R073
		15"	18"	36"	68261R028	68261R073
2-Wide	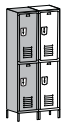	12"	12"	30"	68112R028	68112R073
		12"	15"	30"	68032R028	68032R073
		12"	18"	30"	68042R028	68042R073
		12"	12"	36"	68122R028	68122R073
		12"	15"	36"	68132R028	68132R073
		12"	18"	36"	68142R028	68142R073
		15"	18"	36"	68262R028	68262R073
3-Wide		12"	12"	30"	68113R028	68113R073
		12"	15"	30"	68033R028	68033R073
		12"	18"	30"	68043R028	68043R073
		12"	12"	36"	68123R028	68123R073
		12"	15"	36"	68133R028	68133R073
		12"	18"	36"	68143R028	68143R073
		15"	18"	36"	68263R028	68263R073

QuickShip Vanguard 3 Tier

Grp.	Illustration	Width	Depth	Opn.Ht.*	028 Gray	073 Champagne
1-Wide		12"	12"	24"	68331R028	68331R073
		12"	15"	24"	68341R028	68341R073
		12"	18"	24"	68351R028	68351R073
2-Wide	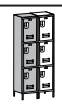	12"	12"	24"	68332R028	68332R073
		12"	15"	24"	68342R028	68342R073
		12"	18"	24"	68352R028	68352R073
3-Wide		12"	12"	24"	68333R028	68333R073
		12"	15"	24"	68343R028	68343R073
		12"	18"	24"	68353R028	68353R073

QuickShip Vanguard 5 Tier

Grp.	Illustration	Width	Depth	Opn.Ht.*	028 Gray	073 Champagne
1-Wide		12"	12"	12"	68161X028	68161X073
		12"	15"	12"	68171X028	68171X073
2-Wide		12"	12"	12"	68162X028	68162X073
		12"	15"	12"	68172X028	68172X073
3-Wide	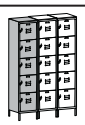	12"	12"	12"	68163X028	68163X073
		12"	15"	12"	68173X028	68173X073

QuickShip Vanguard 6 Tier

Grp.	Illustration	Width	Depth	Opn.Ht.*	028 Gray	073 Champagne
1-Wide		12"	12"	12"	68191X028	68191X073
		12"	15"	12"	68201X028	68201X073
		12"	18"	12"	68211X028	68211X073
2-Wide		12"	12"	12"	68192X028	68192X073
		12"	15"	12"	68202X028	68202X073
		12"	18"	12"	68212X028	68212X073
3-Wide	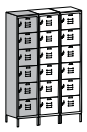	12"	12"	12"	68193X028	68193X073
		12"	15"	12"	68203X028	68203X073
		12"	18"	12"	68213X028	68213X073

QuickShip Vanguard Specialty Lockers

16 Person

Illustration	Width	Depth	Frame Ht.*	028 Gray	073 Champagne
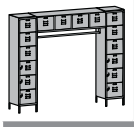	69"	18"	72"	68231X028	68231X073

Wall Mount

	45"	18"	13-5/8"	68242X028	68242X073

* Height shown is the nominal opening height for 1 through 6 tier, and overall frame height for others, not including 6" legs which are standard on all except the Wall Mount Locker. Width is the nominal outside dimension for 1 frame.

** Shaded area in illustrations indicates the unit of sale; i.e. Cat. No. 68003R028 is for one frame of a 12" x 12" x 60" 1 tier locker, but since it is packaged in a group of 3, it must be ordered in multiples of 3.

Vanguard™

QuickShip Locker Accessories

QuickShip Slope Top Kits

1- Wide



Width	Depth	Height	028 Gray	073 Champagne
12″	12″	4″	60229H028	60229H073
12″	15″	5″	60231H028	60231H073
12″	18″	6″	60233H028	60233H073
15″	18″	6″	60239H028	60239H073
18″	18″	6″	60243H028	60243H073

3-Wide



12″	12″	4″	60230H028	60230H073
12″	15″	5″	60232H028	60232H073
12″	18″	6″	60234H028	60234H073
15″	18″	6″	60240H028	60240H073
18″	18″	6″	60244H028	60244H073

QuickShip Slope Top Fillers

Slope Top Fillers

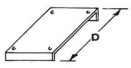

15″	12″	-	661371-028	661371-073
15″	15″	-	661372-028	661372-073
15″	18″	-	661373-028	661373-073

Slope Top Corner Fillers

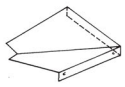

12″	12″	-	66100-028	66100-073
15″	15″	-	66101-028	66101-073
18″	18″	-	66102-028	66102-073

QuickShip Hoods

Slope Hood (18 Ga.)



72″	12″	5″	66144H028	66144H073
72″	15″	6″	66147H028	66147H073
72″	18″	7″	66150H028	66150H073

Hood Splice



-	12″	-	66168-028	66168-073
-	15″	-	66169-028	66169-073
-	18″	-	66170-028	66170-073

Left Hand Slope End



-	12″	-	66158H028	66158H073
-	15″	-	66160H028	66160H073
-	18″	-	66162H028	66162H073

Right Hand Slope End

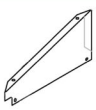

-	12″	-	66159H028	66159H073
-	15″	-	66161H028	66161H073
-	18″	-	66163H028	66163H073

Universal Hood Support



-	-	-	66070	-

QuickShip Locker Bases, 6″ High (for lockers with 6″ Legs)

Front Bases

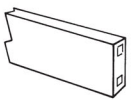

Width	Depth	Height	028 Gray	073 Champagne
12″		6″	60217-028	60217-073
15″		6″	60218-028	60218-073
18″		6″	60219-028	60219-073

End Bases

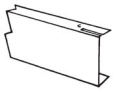

	12″	6″	60204-028	60204-073
	15″	6″	60205-028	60205-073
	18″	6″	60206-028	60206-073

QuickShip Flat Top Fillers

Flat Top Fillers (Overlaps Standard Tops)

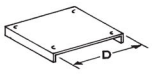

15″	12″	-	661321C028	661321C073
15″	15″	-	661322C028	661322C073
15″	18″	-	661323C028	661323C073

Flat Top Corner Fillers

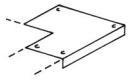

12″	12″	-	66138-028	66138-073
15″	15″	-	66139-028	66139-073
18″	18″	-	66140-028	66140-073

Flat Top Exposed Ends/Divisions (16 Ga.)



-	12″	60″	601660-028	601660-073
-	15″	60″	601670-028	601670-073
-	18″	60″	601680-028	601680-073
-	12″	72″	601760-028	601760-073
-	15″	72″	601790-028	601790-073
-	18″	72″	601800-028	601800-073

Hardware Kit - Locker Groupings

Description	Cat.No.
Hardware kit to join locker grouping together - 100 - 1/2″ bolts and 100 - nuts	8633/72-Hkit

QuickShip Fillers

Vertical Angles

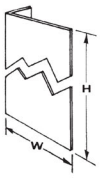

Width	Depth	Height	028 Gray	073 Champagne
12″	-	60″	66113-028	66113-073
12″	-	66″	661221-028	661221-073
12″	-	72″	661141-028	661141-073
12″	-	78″	66116-028	66116-073

Wall Angles (Slip Joint)



-	-	60″	66118-028	66118-073
-	-	66″	66120-028	66120-073
-	-	72″	66119-028	66119-073
-	-	78″	66121-028	66121-073

Touch Up Spray Paint - 12 oz.

Must be ordered with lockers, shelving, or RivetRite products.	723 Light Putty	028 Gray	073 Champagne
	97723Z	97028Z	97073Z

QuickShip Locker Accessories

QuickShip Zee Bases For Lockers without Legs

See illustration at right

Width	Depth	Height	028 Gray	073 Champagne
Front Zee Base (14 Ga.)				
72″	-	4″	66700H028	66700H073
Splice/End Base				
-	12″	4″	66701H028	66701H028
-	15″	4″	66702H028	66702H028
-	18″	4″	66703H028	66703H028
Zee Inside Corner Splice				
-	-	4″	66709H028	66709H073
Rear Leg (for use with 4″ high Zee Base)				
-	-	13″	60092-028	60092-073

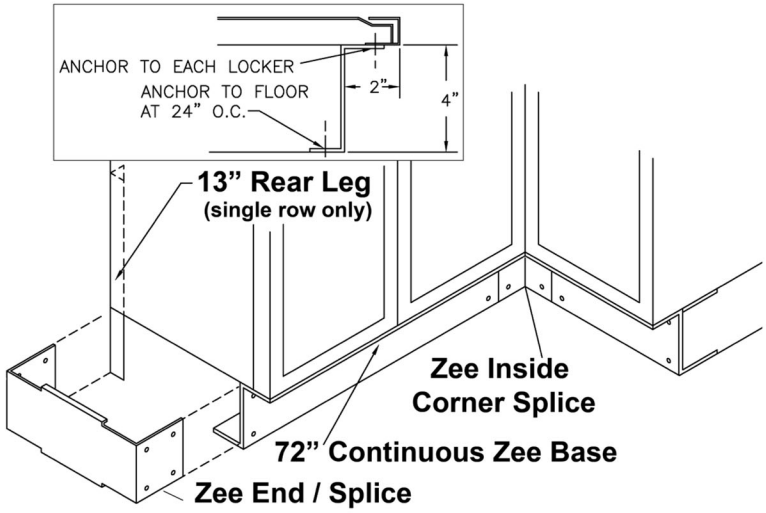

QuickShip Locker Room Benches & Accessories

Width	Depth	Height	Cat. No.	Description
Hardwood Bench Tops				
36″	9-1/2″	1-1/4″	9611	Finished with clear lacquer. Use 2 pedestals per bench through 96″.
48″	9-1/2″	1-1/4″	9600	
72″	9-1/2″	1-1/4″	9602	
96″	9-1/2″	1-1/4″	9604	
Steel Tube Heavy Duty Pedestals				
028 Gray		16-1/4″	60822H028	Includes hardware to mount to bench. Pedestal must be anchored to floor for safety - see concrete floor anchor.
073 Champagne		16-1/4″	60822H073	
Stainless Steel Pedestal				
-		16-1/4″	60827H	Includes hardware to fasten to bench. See non-skid kit below.
Non-Skid Pedestal Kit for Stainless Pedestal				
-		-	68420	Set of 4 rubber feet and hardware for Stainless Steel Pedestals. Order 1 set per pedestal.
Concrete Floor Anchor 1/4″ Diameter				
-		2″	9680	

ADA Benches/Bracket/Shelves/Logo

Width	Depth	Height	Cat. No.	Description
Hardwood Benches for ADA Applications				
42″	18″	1-1/4″	9625	These benches are used with the Bench Bracket (below).
42″	24″	1-1/4″	9624	
48″	18″	1-1/4″	9628	
48″	24″	1-1/4″	9623	

Bench Bracket for ADA Bench

Width	Depth	Height	028 Gray	073 Champagne
-	20″	20″	6ACXHP61H028	6ACXHP61H073

To provide back support with 18″ bench and 24″ seat.

ADA Logo Label

-	-	-	8690	

Locker Shelves for ADA Applications

Width	Depth	Height	028 Gray	073 Champagne
12″	12″	-	60400-028	60400-073
12″	15″	-	60402-028	60402-073
12″	18″	-	60404-028	60404-073
15″	18″	-	60408-028	60408-073
18″	18″	-	60412-028	60412-073

Extra shelves must be installed in the field - may require drilling.

QuickShip Locks

Description	Cat.No.
Dead Bolt, Flat Key Lock	9617
Master Key for Dead Bolt Flat Key Lock	96171

ITEM# 16-17 - NOT USED

- -

NOT USED

ITEM# 18 - POT RACK WITH SHELF (1 EA REQ'D)

Stainless Steel Fabricator CUSTOM

POT RACK WITH SHELF

ITEM# 19 - TRASH CAN (1 EA REQ'D)

Rubbermaid SLIM JIM

TRASH CAN

SLIM JIM® CONTAINERS

The Slim Jim® container delivers the durability needed for commercial environments combined with brand new innovation to increase worker productivity. New product features and accessories deliver the most efficient solution for collection, transportation, and disposal of multi-stream waste and recyclables.

Features and Benefits:

- Venting channels make removing liners up to 80% easier, improving productivity and reducing the risk of worker injury
- Four bag cinches secure liners around the rim of the container and allow for quick, knot-free liner changes
- Handles at the base and rim of the container improve grip and control while lifting and emptying full containers
- Rim with rib-strengthened design increases strength and resists crushing
- Build a recycling station with a variety of dolly and lid options to meet any facility need

COLORS AVAILABLE

Blue, Green, Black, Beige, Brown, Gray, Yellow*, Red*

* 23-gallon only

Material Composition:

Injection molded with a high-quality resin blend.

Accessories:

STAINLESS STEEL DOLLIES

- Slim Jim® Single Dolly
- Slim Jim® Double Dolly
- Slim Jim® Triple Dolly
- Slim Jim® Quadruple Dolly

RESIN DOLLY

- Slim Jim® Trainable Dolly

LIDS

- Bottles and Cans Lid
- Paper Lid
- Mixed Recycling Lid
- Hinged Lid
- Swing Lid



23-Gallon Slim Jim® Container



16-Gallon Slim Jim® Container

SLIM JIM® CONTAINERS

SKU #	DESCRIPTION	COLOR	CAPACITY		LENGTH		WIDTH		HEIGHT		PACK SIZE
			GAL	L	IN	CM	IN	CM	IN	CM	
1971258	SLIM JIM® CONTAINER	GRAY	16	61	22"	55.88	11"	27.94	25"	63.50	4
1955959	SLIM JIM® CONTAINER	BLACK	16	61	22"	55.88	11"	27.94	25"	63.50	4
1971259	SLIM JIM® CONTAINER	BEIGE	16	61	22"	55.88	11"	27.94	25"	63.50	4
1956181	SLIM JIM® CONTAINER	BROWN	16	61	22"	55.88	11"	27.94	25"	63.50	4
1971257	SLIM JIM® CONTAINER	BLUE	16	61	22"	55.88	11"	27.94	25"	63.50	4
1955960	SLIM JIM® CONTAINER	GREEN	16	61	22"	55.88	11"	27.94	25"	63.50	4
FG354060GRAY	SLIM JIM® CONTAINER	GRAY	23	87	22"	55.88	11"	27.94	30"	76.20	4
FG354060BLA	SLIM JIM® CONTAINER	BLACK	23	87	22"	55.88	11"	27.94	30"	76.20	4
FG354060BEIG	SLIM JIM® CONTAINER	BEIGE	23	87	22"	55.88	11"	27.94	30"	76.20	4
1956187	SLIM JIM® CONTAINER	BROWN	23	87	22"	55.88	11"	27.94	30"	76.20	4
1956185	SLIM JIM® CONTAINER	BLUE	23	87	22"	55.88	11"	27.94	30"	76.20	4
1956186	SLIM JIM® CONTAINER	GREEN	23	87	22"	55.88	11"	27.94	30"	76.20	4
1956188	SLIM JIM® CONTAINER	YELLOW	23	87	22"	55.88	11"	27.94	30"	76.20	4
1956189	SLIM JIM® CONTAINER	RED	23	87	22"	55.88	11"	27.94	30"	76.20	4
FG354007BLUE	SLIM JIM® CONTAINER	BLUE (RECYCLING)	23	87	22"	55.88	11"	27.94	30"	76.20	4
FG354007GRN	SLIM JIM® CONTAINER	GREEN (RECYCLING)	23	87	22"	55.88	11"	27.94	30"	76.20	4

©2016 Rubbermaid Commercial Products LLC
8900 Northpointe Executive Park Drive, Huntersville, NC 28078

ITEM# 20 - 3-COMPARTMENT SINK (1 EA REQ'D)

Stainless Steel Fabricator CUSTOM

3-COMPARTMENT SINK

WITH SINK COVERS

ITEM# 21 - DRAIN, LEVER HANDLE (3 EA REQ'D)

Fisher 22209

DrainKing Waste Valve, with flat strainer, 12 GPM drain rate, dual teflon seals, stainless steel ball, cast red brass body

APPLICATION:

PRODUCT NAME:

DRAINKING FLAT STRAINER

JOB NAME:

QUANTITY:

ITEM NO.:

MODEL:

- ☐ 22209 DRAINKING FLAT STRAINER BRASS
- ☐ 28932 DRAINKING FLAT STRAINER CHROME

OPTIONS OR MODIFICATIONS:

- ☐ OTHER _____

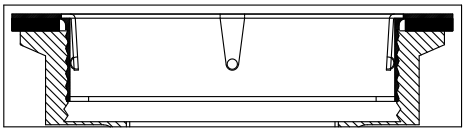

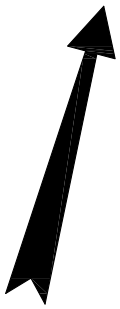

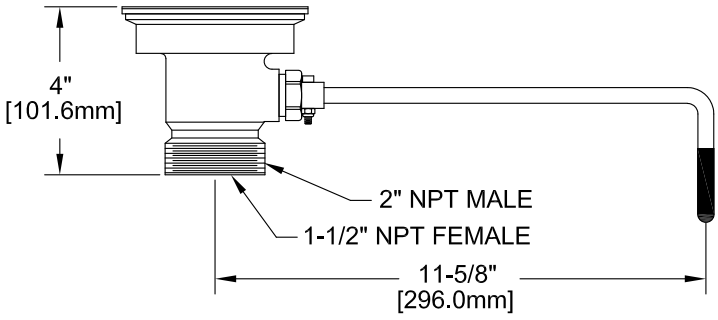

FEATURES:

* DUAL TEFLON SEALS
* STAINLESS STEEL BALL
* CAST RED BRASS BODY
* EXTRA STURDY STAINLESS STEEL CLAMPING RING
* "CLEAR THROUGH" OPENING - NO NEED TO DISASSEMBLE IF SNAKING IS REQUIRED
* INDUSTRY STANDARD "SEALING" ANGLE - FITS FLUSH TO STANDARD STAINLESS STEEL SINKS
* STAINLESS STEEL FLAT STRAINER
* 1/4 TURN FULLY OPENS AND CLOSES VALVE

DRAIN RATE:

* 12 GPM

SHIPPING WEIGHT

* 5.0 LBS

PRODUCT COMPLIANCE:

* ASME A112.18.2 / CSA B125.2

ROUGH-IN:

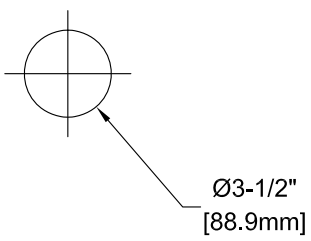

SPEC. DNWV-DNF-XXDKL

FISHER MANUFACTURING COMPANY
TOLL FREE: 800-421-6162 - FAX: 800-832-8238
information@fisher-mfg.com - www.fisher-mfg.com

ITEM# 22 - FAUCET, WALL MOUNT WITH PRE-RINSE (1 EA REQ'D)

T&S Brass B-0133-CR-BJ

EasyInstall Pre-Rinse Faucet, splash/wall mount, 8" OC, 44" flexible stainless steel hose with B-0107-J Spray Valve (1.07 gpm), Cerama cartridges with check valves, lever handles, 18" riser, includes 6" wall bracket, low lead compliant

WITH 0.5 GPM AERATOR

T&S BRASS AND BRONZE WORKS, INC.
2 Saddleback Cove / P.O. Box 1088
Travelers Rest, SC 29690

Travelers Rest, SC: 800-476-4103 • Simi Valley, CA: 800-423-0150 • Fax: 864-834-3518 • www.tsbrass.com

Model No.
B-0133-CR-BJ

Item No.

This Space for Architect/Engineer Approval

Job Name_____Date_____

Model Specified_____ Quantity_____

Customer/Wholesaler_____

Contractor_____

Architect/Engineer_____

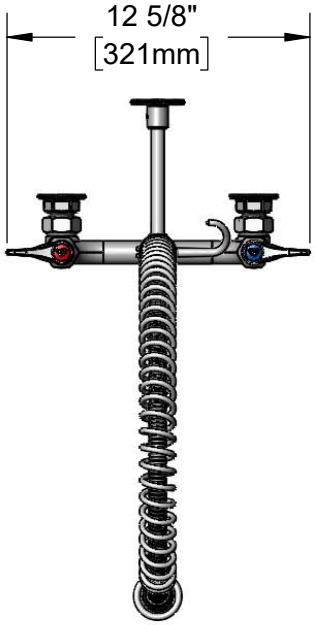

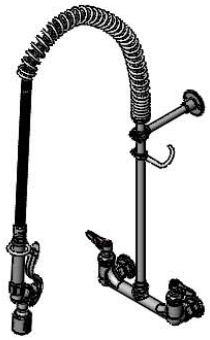

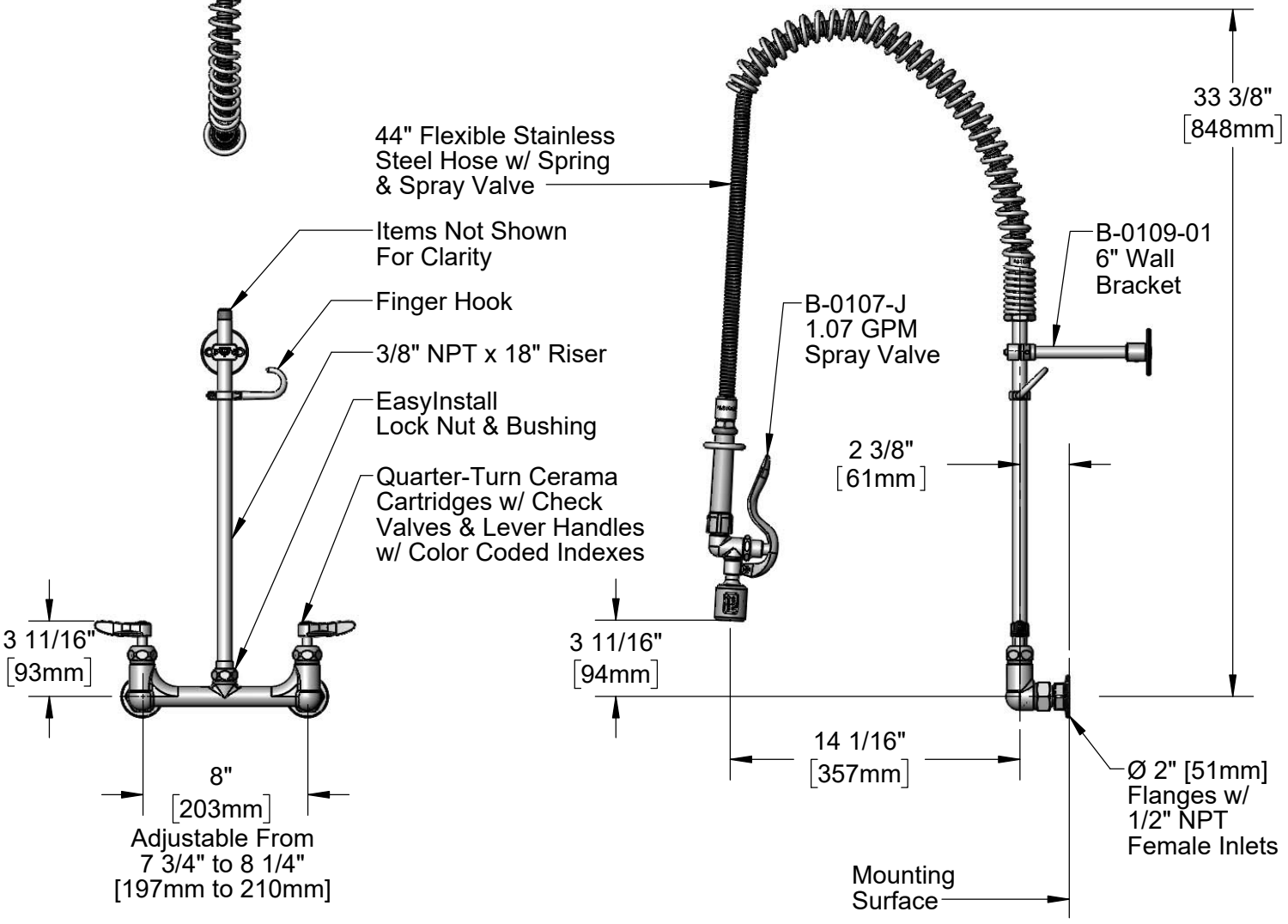

Product Specifications:
Pre-Rinse Unit: EasyInstall 8" Wall Mount Mixing Faucet, Quarter-Turn Cerama Cartridges w/ Check Valves, Lever Handles, 44" Flexible Stainless Steel Hose, 1.07 GPM Spray Valve, 6" Wall Bracket & 1/2" NPT Female Inlets

Product Compliance:
ASME A112.18.1 / CSA B125.1
NSF 61 - Section 9
NSF 372 (Low Lead Content)
2019 DOE PRSV - Class II

Drawn:	LSA	Checked:	JRM	Approved:	JHB	Date:	09/20/19	Scale:	1:8	Sheet:	1 of 2

T&S BRASS AND BRONZE WORKS, INC.
2 Saddleback Cove / P.O. Box 1088
Travelers Rest, SC 29690

Travelers Rest, SC: 800-476-4103 • Simi Valley, CA: 800-423-0150 • Fax: 864-834-3518 • www.tsbrass.com

Model No.
B-0133-CR-BJ

Item No.

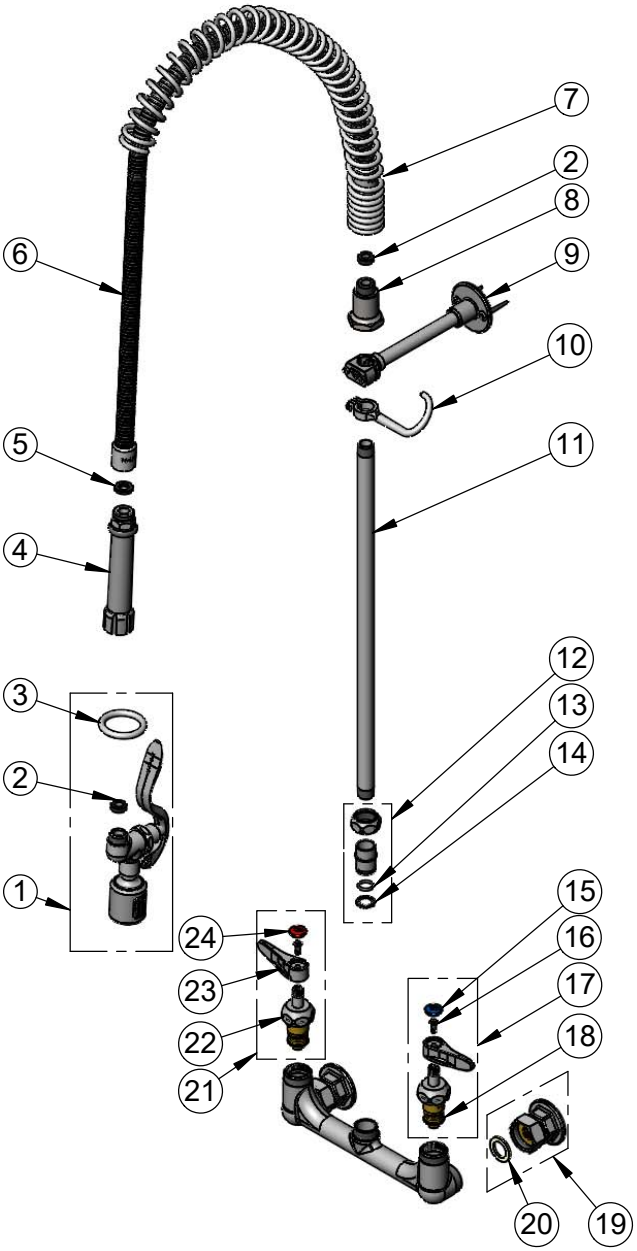

ITEM NO.	SALES NO.	DESCRIPTION
1	B-0107-J	1.07 GPM Spray Valve
2	010476-45	#27 Washer
3	000907-45	Spray Valve Hold Down Ring
4	002987-40	Grip Handle
5	001014-45	Washer, B-0100 Hose Barrel
6	B-0044-H2A	44" Flexible Stainless Steel Hose, Less Handle
7	000888-45	EasyInstall Overhead Spring
8	000821-40	Spring Body
9	B-0109-01	6" Wall Bracket
10	004R	Finger Hook
11	000369-40	3/8" NPT x 18" Riser
12	EZ-K	EasyInstall Kit: Nut, Bushing, O-ring & Lock Washer
13	001065-45	O-Ring
14	014200-45	Star Washer, Anti-Rotation
15	018506-19NS	Blue Button Index, Press-in
16	000925-45	Lab Handle Screw
17	012447-25NS	Quarter-Turn Cerama Cartridge, LTC w/ Check Valve, Handle, Index & Screw
18	012395-25NS	Quarter-Turn Cerama Cartridge, LTC w/ Check Valve
19	00AA	1/2" NPT Female Eccentric Flange
20	001019-45	Coupling Nut Washer
21	012446-25NS	Quarter-Turn Cerama Cartridge, RTC w/ Check Valve, Handle, Index & Screw
22	012394-25NS	Quarter-Turn Cerama Cartridge, RTC w/ Check Valve
23	001638-45NS	Lever Handle (New Style)
24	001193-19NS	Red Button Index, Press-in

Product Specifications:
Pre-Rinse Unit: EasyInstall 8" Wall Mount Mixing Faucet, Quarter-Turn Cerama Cartridges w/ Check Valves, Lever Handles, 44" Flexible Stainless Steel Hose, 1.07 GPM Spray Valve, 6" Wall Bracket & 1/2" NPT Female Inlets

Product Compliance:
ASME A112.18.1 / CSA B125.1
NSF 61 - Section 9
NSF 372 (Low Lead Content)
2019 DOE PRSV - Class II

Drawn:	Checked:	Approved:	Date:	Scale:	Sheet:
LSA	JRM	JHB	09/20/19	NTS	2 of 2

ITEM# 23 - FAUCET, BACKSPLASH MOUNT (1 EA REQ'D)

Fisher 60690

Faucet, backsplash mount, 8" centers, 14" swing spout, lever handles with color coded indexes, 1/2" NPT male inlets, stainless steel, ADA Compliant

WITH 74233 AERATOR

SPEC. 61220

8" C/C BACKSPLASH FAUCET W/ LEVER HANDLES

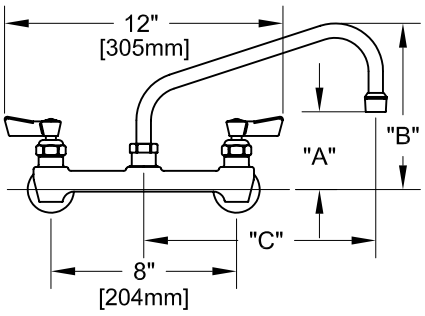

8" C/C BACKSPLASH FAUCET W/ WRIST HANDLES

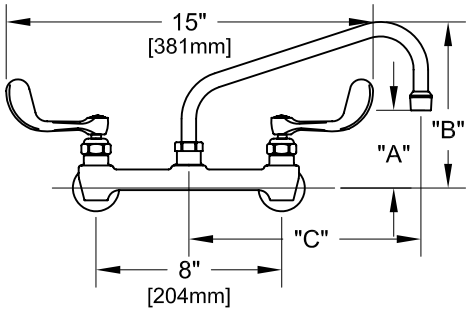

8" C/C BACKSPLASH FAUCET

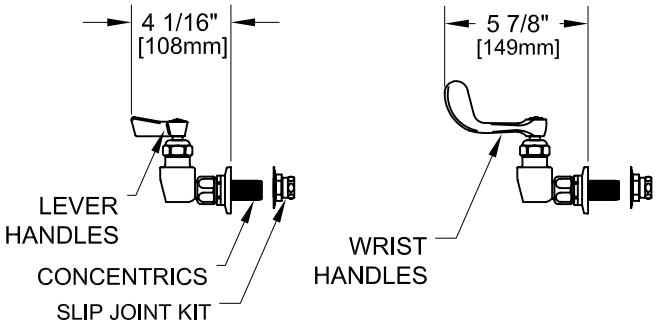

ROUGH-IN:

BACKSPLASH

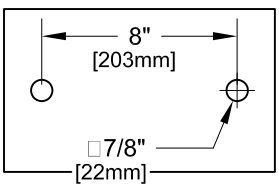

ANSI/A112.18.1-2005

PRODUCT NAME:
STAINLESS STEEL
8" C/C BACKSPLASH FAUCET

MODEL:

- ☐ 61220 W/ 6" SWING SPOUT W/ LEVER HANDLES
- ☐ 61093 W/ 8" SWING SPOUT W/ LEVER HANDLES
- ☐ 60968 W/ 10" SWING SPOUT W/ LEVER HANDLES
- ☐ 60836 W/ 12" SWING SPOUT W/ LEVER HANDLES
- ☐ 60690 W/ 14" SWING SPOUT W/ LEVER HANDLES
- ☐ 60569 W/ 16" SWING SPOUT W/ LEVER HANDLES
- ☐ 61239 W/ 6" SWING SPOUT W/ WRIST HANDLES
- ☐ 61107 W/ 8" SWING SPOUT W/ WRIST HANDLES
- ☐ 60976 W/ 10" SWING SPOUT W/ WRIST HANDLES
- ☐ 60844 W/ 12" SWING SPOUT W/ WRIST HANDLES
- ☐ 60704 W/ 14" SWING SPOUT W/ WRIST HANDLES
- ☐ 60577 W/ 16" SWING SPOUT W/ WRIST HANDLES

FEATURES

CONTROL VALVE
* 8" C/C BACKSPLASH MOUNT
* CONCENTRICS
* STAINLESS STEEL CONSTRUCTION
* SWIVELLING SEAT DISKS
* HOT SIDE STEM - RIGHT HAND
* COLD SIDE STEM - LEFT HAND
* LEVER HANDLES OR WRIST HANDLES
* SWING SPOUT

SYSTEM LIMITS
* TEMP: 40°F MIN. TO 140°F MAX.
* PRESSURE: 200 PSI MAX. STATIC
* 2.20 GPM AT 80 PSI

SHIPPING WEIGHT
* 5.0 LBS

* NSF 61-9 APPROVED & LISTED
www.truesdail.com

MODELS	DIM "A"	DIM "B"	DIM "C"
61220 61239	2-1/4" [57mm]	5-7/8" [149mm]	6" [152mm]
61093 61107	2-1/2" [64mm]	6-3/8" [162mm]	8" [204mm]
60968 60976	3-1/8" [79mm]	6-7/8" [175mm]	10" [254mm]
60836 60844	3-3/4" [95mm]	7-3/8" [187mm]	12" [305mm]
60690 60704	4-3/8" [111mm]	8-1/4" [210mm]	14" [356mm]
60569 60577	5" [127mm]	8-7/8" [225mm]	16" [406mm]

FISHER
FISHER MANUFACTURING COMPANY
TOLL FREE: 800-421-6162 - FAX: 800-832-8238
information@fisher-mfg.com - www.fisher-mfg.com

ITEM# 24 - POT RACK WITH SHELF (1 EA REQ'D)

Stainless Steel Fabricator CUSTOM

POT RACK WITH SHELF

ITEM# 25 - MOP SINK STORAGE CABINET (1 EA REQ'D)

Advance Tabco 9-OPC-84

Cabinet with Mop Sink, 25-3/16"W x 23"D x 84"H, mop sink base with drain (bowl 16” x 20” x 12”), left hinged door, (2) mop holders, (1) fixed intermediate shelf, slotted side panels for ventilation, 16/304 series stainless steel sink bowl, 18/304 series stainless steel sink bowl apron, 18/430 series stainless steel cabinet, NSF (right hinged door available on request)

STAINLESS STEEL

SINGLE DOOR MOP SINK CABINET

Item #: _____ Qty #: _____

Model #: _____

Project #: _____





Cabinet Includes Floor Mop Sink

FEATURES:

16" x 20" x 12" Sink Bowl with Drain
Slotted Side Panels for Ventilation
Single Left-Hinged Door
Fixed Stainless Steel Utility Shelf
2 Mop Holders (1 on each side)
Door prepunched and capped for optional SU-27 Door Lock

CONSTRUCTION:

All TIG welded.
Welded areas blended to match adjacent surfaces and to a satin finish.



MATERIAL:

16 gauge type "304" Series Sink Bowl
18 gauge type "304" Series Sink Bowl Apron
9-OPC-84 - 18 gauge type "430" Series Stainless Steel Cabinet
9-OPC-84-300 - 18 gauge type "300" Series Stainless Steel Cabinet

OPTIONS:

SU-27 Door Lock
K-94-SHELF Fixed Mid-shelf for 84" High Cabinets
K-94-BACK Add 430 Stainless Steel Back Panel
K-94-BACK-300 Add 300 Stainless Steel Back Panel
K-472 Add 8" O.C. Faucet Holes for Service Faucet (Must provide faucet hole height location)
K-240 Service Faucet
CAB-R Modify Unit to a Right-Hand Door Swing
Standard Left-Hand Door Swing (If required, specify optional right-hand door swing when ordered)

Model #	Cabinet Material
9-OPC-84	18 Ga., 430 S/S
9-OPC-84-300	18 Ga., 300 S/S

ADVANCE TABCO SMART FABRICATION™ www.advancetabco.com

Customer Service Available To Assist You 1-800-645-3166 8:30 am - 7:00 pm E.S.T.

For Orders & Customer Service:
Email: customer@advancetabco.com or **Fax:** 631-242-6900

For Smart Fabrication™ Quotes:
Email: smartfab@advancetabco.com or **Fax:** 631-586-2933

REF-E

DIMENSIONS and SPECIFICATIONS

ALL DIMENSIONS ARE TYPICAL TOL ± .500”

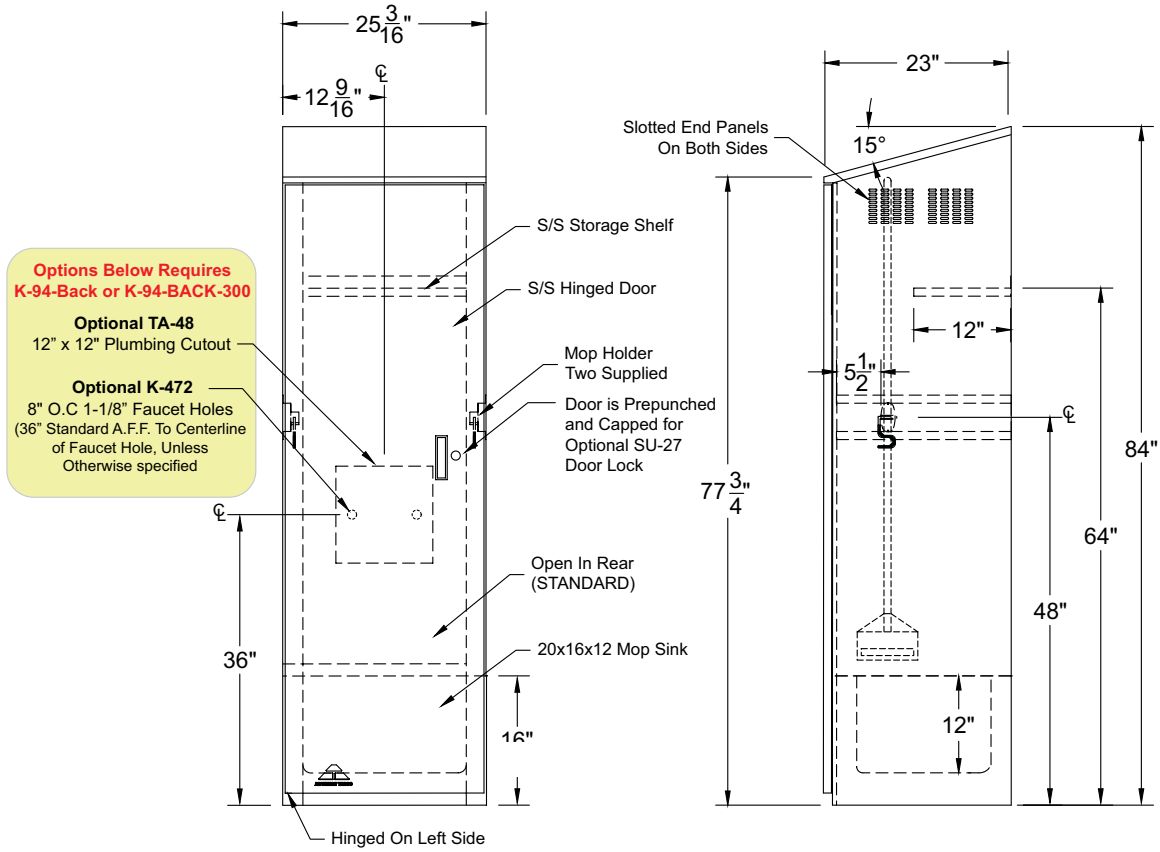

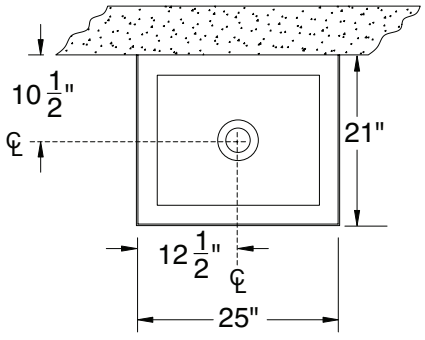

Mop Sink Detail

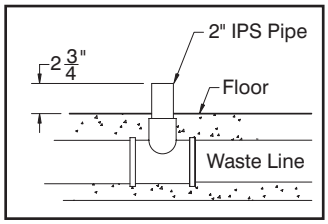

Drain Detail

345 lbs.

ADVANCE TABCO is constantly engaged in a program of improving our products. Therefore, we reserve the right to change specifications without prior notice.
© ADVANCE TABCO, OCTOBER 2025

ITEM# 26 - FAUCET, SERVICE SINK (1 EA REQ'D)

Fisher 82530

Service Sink Faucet, wall mount mixing faucet with 8" adjustable centers, EZ Install adapters, 6" spout with garden hose outlet, vacuum breaker, lever handles, 1/2" inlets

WITH 74223 AERATOR

FISHER MANUFACTURING COMPANY TOLL FREE: 800-421-6162 - FAX: 800-832-8238
customer@fisherfaucets.com - www.fisherfaucets.com

PRODUCT NAME:
FAUCET 8AWCDZLH 06SRV

SPEC. FACB-SSL-8AWZZLL

Customer/Wholesaler:	Date:	Job Name:	Model Specified: 82530	Quantity:
Contractor:	Architect/Engineer:			

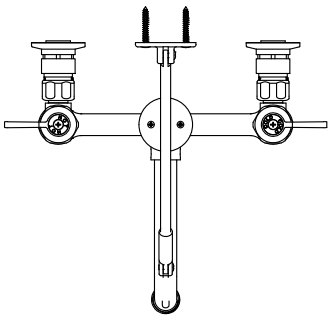

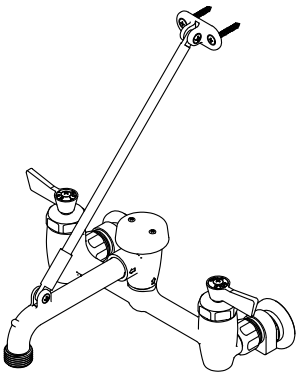

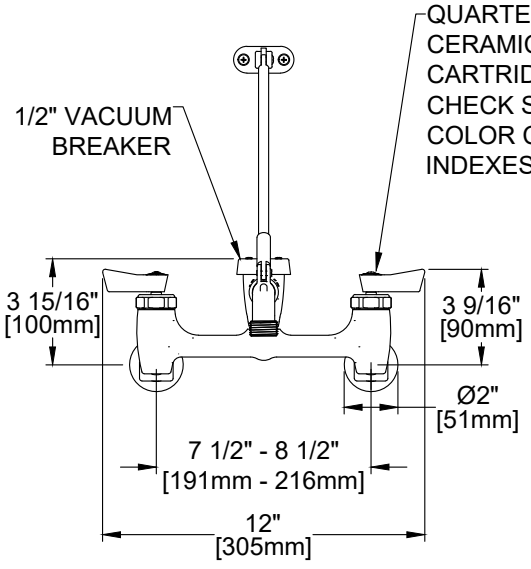

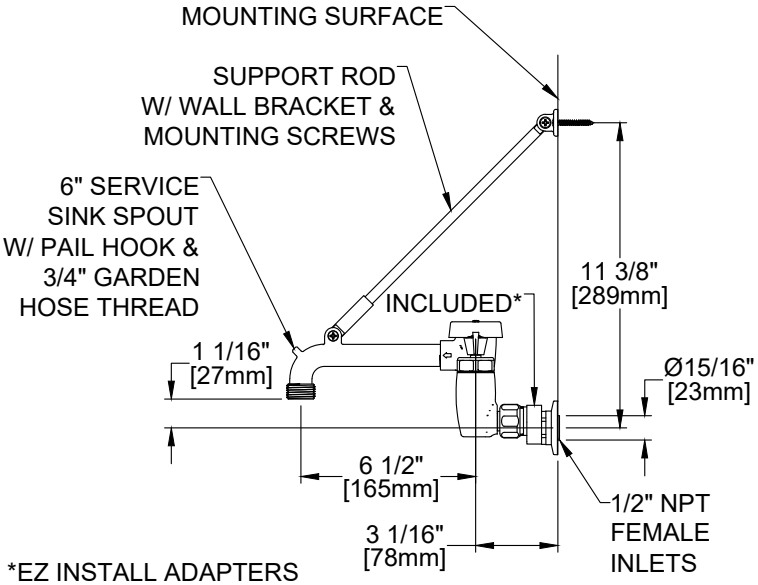

*EZ INSTALL ADAPTERS
TO CONNECT TO EXISTING HARDWARE
FOR T&S, CHICAGO, KROWNE,
1/2" NPT ECCENTRIC FEMALE FLANGES

PRODUCT SPECIFICATIONS: 8" ADJUSTABLE WALL FAUCET, QUARTER TURN CERAMIC DISK CARTRIDGES W/ CHECK STEMS, LEVER HANDLES, 6" SERVICE SINK SPOUT W/ VACUUM BREAKER 11.5 GPM @ 60 PSI, 1/2" NPT FEMALE INLETS, INCLUDES EZ INSTALL ADAPTERS

PRODUCT COMPLIANCE:
ASME A112.18.1 / CSA B125.1
NSF 61 - Section 9
NSF 372 (Low Lead Content)

FISHER MANUFACTURING COMPANY TOLL FREE: 800-421-6162 - FAX: 800-832-8238
customer@fisherfaucets.com - www.fisherfaucets.com

PRODUCT NAME:
FAUCET 8AWCDZLH 06SRV

SPEC. FACB-SSL-8AWZZLL

Customer/Wholesaler:	Date:	Job Name:	Model Specified: 82530	Quantity:
Contractor:	Architect/Engineer:			

REPLACEMENT PARTS

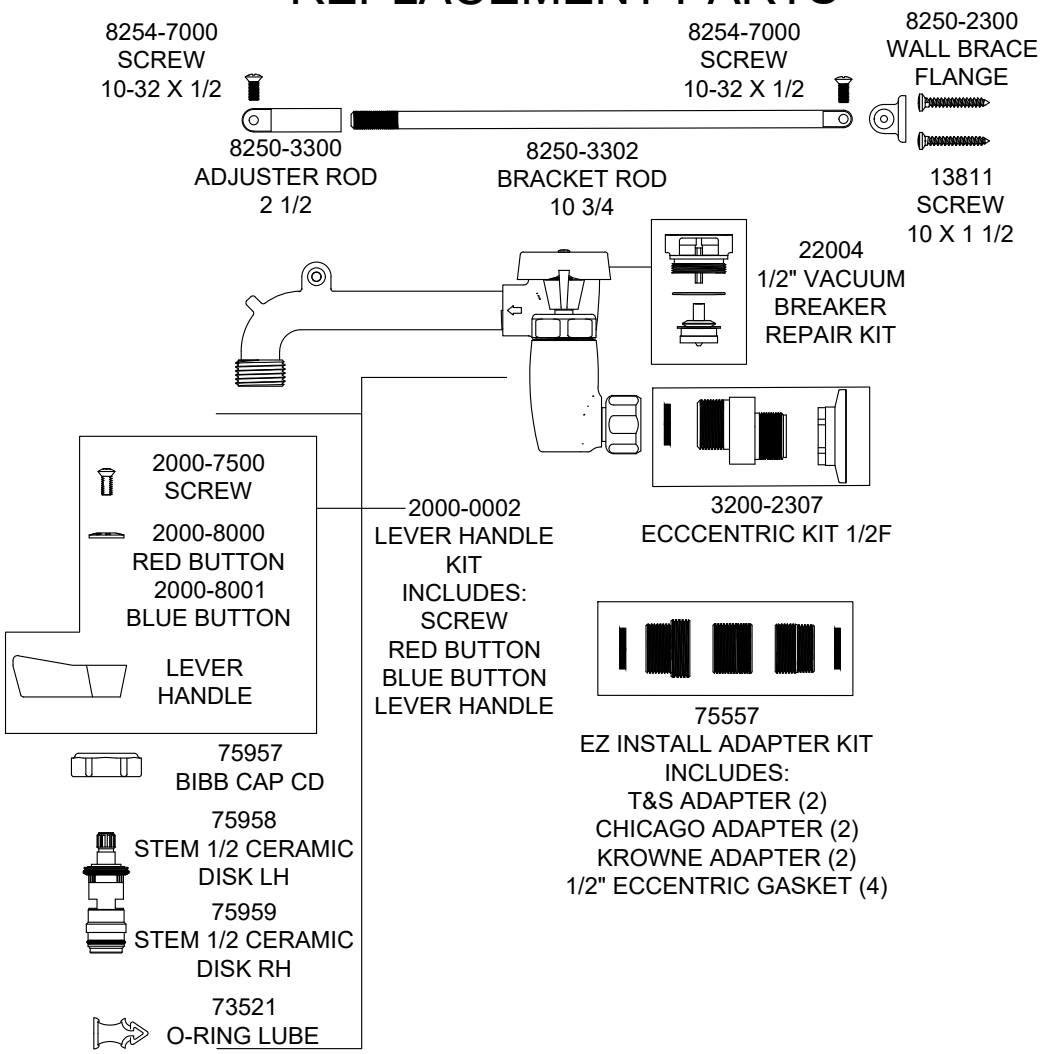

PRODUCT SPECIFICATIONS: 8" ADJUSTABLE WALL FAUCET, QUARTER TURN CERAMIC DISK CARTRIDGES W/ CHECK STEMS, LEVER HANDLES, 6" SERVICE SINK SPOUT W/ VACUUM BREAKER 11.5 GPM @ 60 PSI, 1/2" NPT FEMALE INLETS, INCLUDES EZ INSTALL ADAPTERS

PRODUCT COMPLIANCE:
ASME A112.18.1 / CSA B125.1
NSF 61 - Section 9
NSF 372 (Low Lead Content)

ITEM# 27 - CHEMICAL STORAGE CABINET (1 EA REQ'D)

Stainless Steel Fabricator CUSTOM

CHEMICAL STORAGE CABINET

ITEM# 28-29 - NOT USED

- -

NOT USED

ITEM# 30 - DRY STORAGE SHELVING

Metro BR SERIES

DRY STORAGE SHELVING

Item # _____

Job _____

SUPER ERECTA SHELF®

WIRE SHELVING

- **Unique Design:** The open wire design of these shelves minimizes dust accumulation and allows free circulation of air, greater visibility of stored items and greater light penetration.
- **Durable Construction:** Super Erecta shelves and posts are constructed of heavy-gauge carbon steel or Type 304 stainless steel.
- **Choice of Finishes:** Super Erecta Brite™ and chrome-plated for dry storage; Metroseal 3™ with Microban® antimicrobial product protection and stainless steel for corrosive environments; and attractive epoxy color options for merchandising applications.
- **Versatile:** Super Erecta Shelf® wire shelving can adapt to your changing needs. By using various accessories, hundreds of shelving configurations become possible.
- **Fast, Secure Assembly:** SiteSelect™ Posts have a double groove visual guide feature every 8" (203mm), circular grooves at 1" (25mm) increments, and are numbered at 2" (50mm) intervals. A patented, tapered split sleeve snaps together around each post. Tapered openings in the shelf corners slide over the tapered split sleeves providing a positive lock. Shelf is assembled in minutes without the use of any special tools.
- **Adjustability:** Shelves can be adjusted at 1" (25mm) intervals along the entire length of the post.
- **Shelf Ribs:** Run front to back, allowing you to slide items on and off shelves smoothly.
- **Shelf Accessibility:** Shelves can be loaded/unloaded easily from all sides This open construction allows maximum use of storage cube.
- **Adjustable Feet:** Bolt levelers compensate for surface irregularities.

Note: Stainless stationary posts are equipped with stainless steel leveling feet.



NSF



*MICROBAN® and the MICROBAN® symbol are registered trademarks of the Microban Products Company, Huntersville, NC.

InterMetro Industries Corporation
North Washington Street
Wilkes-Barre, PA 18705
www.metro.com

SUPER ERECTA SHELF®
WIRE SHELVING

Wire Shelves

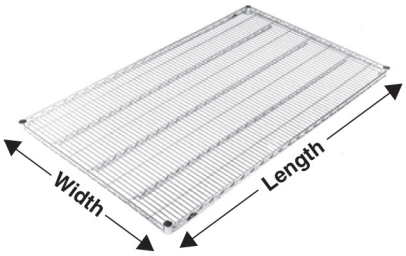



Split Sleeve



Aluminum Split Sleeve

- **Metroseal 3:** Metro's proprietary epoxy coating contains Microban® antimicrobial product protection. Microban antimicrobial protects the epoxy coating from bacteria, mold, mildew, and fungus that cause odors, stains, and product degradation.
- See spec sheet 10.14 for epoxy color options.
- Plastic split sleeves are included with each shelf
  Replacements are available: Cat. No. 9985 (bag of 4)
- Aluminum split sleeves are recommended for abusive mobile applications. Sleeves with stainless C-rings must be used for cart wash applications (exceeding 200°F/93°C) and for all autoclave applications.
  Cat. No. 9986Z (bag of 4 with zinc C-rings)
  Cat. No. 9986S (bag of 4 with stainless steel C-rings)
- Weight capacity (evenly distributed) per shelf
  800 lbs. (363kg) for lengths of 18" to 48" (457 to 1219mm)
  600 lbs. (272kg) for lengths of 54" (1370mm) or longer
- Weight capacity (evenly distributed) per unit.
  Stationary shelving units have a maximum load capacity (evenly distributed) of 2,000 lbs. (907kg)
  Mobile units have a maximum capacity of three times the caster load rating up to but not exceeding 1,000 lbs. (453kg) total. Consult the Metro catalog for caster load ratings

Model No. Super Erecta Brite	Model No. Chrome	Model No. Metroseal 3 with Microban®	Model No. Stainless	Nominal Width/Length (in.)	(mm)	Approx. Pkd. Wt. (lbs.)	(kg)
1424BR	1424NC	1424NK3	1424NS	14x24	355x610	6	2.7
1430BR	1430NC	1430NK3	1430NS	14x30	355x760	7	3.2
1436BR	1436NC	1436NK3	1436NS	14x36	355x914	8	3.6
1442BR	1442NC	1442NK3	1442NS	14x42	355x1066	9 1/2	4.3
1448BR	1448NC	1448NK3	1448NS	14x48	355x1219	10 1/2	4.7
1460BR	1460NC	1460NK3	1460NS	14x60	355x1524	14	6.3
1472BR	1472NC	1472NK3	1472NS	14x72	355x1829	17	7.7
1824BR	1824NC	1824NK3	1824NS	18x24	457x610	7	3.2
1830BR	1830NC	1830NK3	1830NS	18x30	457x760	8	3.6
1836BR	1836NC	1836NK3	1836NS	18x36	457x914	9 1/2	4.3
1842BR	1842NC	1842NK3	1842NS	18x42	457x1066	11	5.0
1848BR	1848NC	1848NK3	1848NS	18x48	457x1219	12	5.4
1854BR	1854NC	1854NK3	1854NS	18x54	457x1370	14 1/2	6.6
1860BR	1860NC	1860NK3	1860NS	18x60	457x1524	17	7.7
1872BR	1872NC	1872NK3	1872NS	18x72	457x1829	20	9.1
2124BR	2124NC	2124NK3	2124NS	21x24	530x610	8	3.6
2130BR	2130NC	2130NK3	2130NS	21x30	530x760	9	4.1
2136BR	2136NC	2136NK3	2136NS	21x36	530x914	11	5.0
2142BR	2142NC	2142NK3	2142NS	21x42	530x1066	12	5.4
2148BR	2148NC	2148NK3	2148NS	21x48	530x1219	14	6.4
2154BR	2154NC	2154NK3	2154NS	21x54	530x1370	16	7.3
2160BR	2160NC	2160NK3	2160NS	21x60	530x1524	18	8.2
2172BR	2172NC	2172NK3	2172NS	21x72	530x1829	24	10.9
2424BR	2424NC	2424NK3	2424NS	24x24	610x610	9	4.1
2430BR	2430NC	2430NK3	2430NS	24x30	610x760	11	5.0
2436BR	2436NC	2436NK3	2436NS	24x36	610x914	13	5.9
2442BR	2442NC	2442NK3	2442NS	24x42	610x1066	15	6.8
2448BR	2448NC	2448NK3	2448NS	24x48	610x1219	16	7.3
2454BR	2454NC	2454NK3	2454NS	24x54	610x1370	19	8.6
2460BR	2460NC	2460NK3	2460NS	24x60	610x1524	21	9.5
2472BR	2472NC	2472NK3	2472NS	24x72	610x1829	26	11.8

Note: 14" (355mm) deep units.
Free-standing units: Units taller than 63" (1600mm) must be properly fastened to the floor or wall using Metro foot plates or wall brackets.
Mobile units: maximum allowable post height is 54" (1370mm).

SUPER ERECTA SHELF®
WIRE SHELVING

SiteSelect™ Posts

Stationary Posts

Stationary posts are equipped with a leveling bolt to account for uneven floors.

- Height includes leveling bolt (completely tightened) and post cap Leveling bolt can be adjusted 1/2" (13mm).
- Foot plates may be ordered separately and installed in place of leveling foot.
- Replacement leveling bolts
  Zinc Cat. No. RPF04-004 Stainless Steel Cat. No. RPF04-004C
- Replacement post cap for standard posts
  Black Cat. No. RPC06-035



SiteSelect Posts feature double grooves every 8" (203mm) to aid assembly.

Model No. Chrome	Model No. Metroseal 3 with Microban	Model No. Stainless Steel	Height (in.)	Height (mm)	Approx. Pkd. Wt. (lbs.)	Approx. Pkd. Wt. (kg)
7P	7PK3		7 3/8	187	1/2	0.3
13P	13PK3	13PS	14 3/8	365	1	0.5
27P	27PK3	27PS	28 3/8	720	1 3/4	0.75
33P	33PK3	33PS	34 3/8	873	2	0.9
54P	54PK3	54PS	54 7/16	1382	3	1.4
63P	63PK3	63PS	62 7/16	1585	3 1/2	1.6
74P	74PK3	74PS	74 1/2	1892	4	1.8
86P	86PK3	86PS	86 1/2	2197	5	2.3
*96P			96 1/2	2450	5 1/2	2.5

*96P should not be used on units less than 24" (610mm) deep. Consult Metro Engineering for alternate recommendations.



Stationary Post

Mobile Posts (For use with Stem Casters)

- Height includes post cap.

Model No. Chrome	Model No. Metroseal 3 with Microban	Model No. Stainless Steel	Height (in.)	Height (mm)	Approx. Pkd. Wt. (lbs.)	Approx. Pkd. Wt. (kg)
13UP	13UPK3	13UPS	13 3/4	349	1	0.5
27UP		27UPS	27 3/4	704	1 3/4	0.75
33UP	33UPK3	33UPS	33 3/4	857	2	0.9
54UP	54UPK3	54UPS	53 13/16	1366	3	1.4
63UP	63UPK3	63UPS	61 13/16	1570	3 1/2	1.6
	70UPK3		69 3/4	1771	3 3/4	1.7
74UP	74UPK3	74UPS	73 7/8	1876	4	1.8
86UP	86UPK3	86UPS	85 7/8	2181	4.5	2.0



Post for Stem Caster

Staked Posts (For use with Truck Dollies)

- Each post connects to the truck dolly through the stem receptacle. The stem receptacle is staked into the bottom of the post to ensure a durable connection in abusive mobile applications.
- Each includes a leveling/connecting bolt.

Model No. Chrome	Model No. Stainless Steel	Height (in.)	Height (mm)	Approx. Pkd. Wt. (lbs.)	Approx. Pkd. Wt. (kg)
54P-STKD	54PS-STKD	54 7/16	1382	3	1.4
63P-STKD	63PS-STKD	62 7/16	1585	3 1/2	1.6
74P-STKD	74PS-STKD	74 1/2	1892	4	1.8



Staked Post

Swaged Posts (For use with Stem Casters in Cart Wash Applications)

- Each post has an aluminum cap swedged into the top of the post.

Model No. Stainless Steel	Height (in.)	Height (mm)	Approx. Pkd. Wt. (lbs.)	Approx. Pkd. Wt. (kg)
33UPS-SW	33 3/4	857	2	0.9
54UPS-SW	53 13/16	1366	3	1.4
63UPS-SW	61 13/16	1570	3 1/2	1.6



Swaged Post

Special Length Posts

Special length cut posts are available. Consult your Metro representative for more information.

10.01

Job _____

SUPER ERECTA SHELF®
WIRE SHELVING

Super Wide Shelving

- **High-density Storage:** Super Wide™ shelves have a greater storage area for holding large quantities of supplies, especially large, bulky objects, providing maximum storage in minimum space.
- **Load Capacity** (evenly distributed) per shelf:
  Depths: 30" and 36" (760 and 914mm)

  800 lbs. (363kg) for lengths 48" (1219mm) or shorter.

  600 lbs. (272kg) for lengths 54" (1370mm) or longer.



Model No. Chrome	Model No. Metroseal 3 with Microban	Model No. Stainless Steel	Nominal Width/Length (in.)	(mm)	Approx. Pkd. Wt. (lbs.)	(kg)
3036NC	3036NK3	3036NS	30x36	760x914	15	6.8
3048NC	3048NK3	3048NS	30x48	760x1219	21	9.5
3060NC	3060NK3	3060NS	30x60	760x1524	26 1/2	11.8
3072NC	3072NK3	3072NS	30x72	760x1829	31	14.0
3636NC	3636NK3	3636NS	36x36	910x914	18	8.2
3648NC	3648NK3	3648NS	36x48	910x1219	23	10.4
3660NC	3660NK3	3660NS	36x60	910x1524	29	13.1
3672NC	3672NK3	3672NS	36x72	910x1829	34 1/2	15.4

Foot Plates

- Use to bolt units to the floor, or when a broader, more stable foot is desired. Foot plates also help to protect floors by distributing the point load of the shelving unit across a larger contact point.
- Foot plates (completely tightened) add 1/8" (3mm) to the specified heights of each stationary post on the table.
  Zinc Cat. No. 9993Z
  Stainless Steel Cat. No. 9993S



"S" Hook

- Used to add on shelving units with only two posts required. Order two per shelf level.
  Cat. No. 9995Z



Wire Shelving

All Metro Catalog Sheets are available on our website: **www.metro.com**

InterMetro Industries Corporation
North Washington Street, Wilkes-Barre, PA 18705
Phone: 570-825-2741
Product Information. U.S. and Canada: 1.800.992.1776
Outside U.S. and Canada: www.metro.com/contactus

L02-006e
Printed in U.S.A Rev. 1/15

Information and specifications are subject to change without notice. Please confirm at time of order

Copyright © 2015 InterMetro Industries Corp.

ITEM# 31 - REFRIGERATOR, REACH-IN (1 EA REQ'D)

Traulsen G20010

Spec-Line G Series Refrigerator, Reach-in, two-section, 46.0 cu. ft., self-contained refrigeration, (2) full height doors (hinged left/right), (3) epoxy coated shelves per section (factory installed), microprocessor control with LED display, LED interior lights, stainless steel exterior & interior, 6" high casters, R290 Hydrocarbon refrigerant, 1/4 HP, , cETLus, ETL-Sanitation, ENERGY STAR®

WITH CASTERS

G SERIES
2-SECTION SOLID DOOR REACH-IN REFRIGERATOR

Project Name:	Location:		AIA #:
Item #:	Qty:	Model #:	SIS #:

G SERIES - STAINLESS STEEL EXTERIOR & INTERIOR



HALF-HEIGHT MODELS
G20000 Hinged Left/Right
G20001 Hinged Right/Left
G20002 Hinged Right/Right
G20003 Hinged Left/Left

FULL-HEIGHT MODELS
G20010 Hinged Left/Right
G20011 Hinged Right/Left
G20012 Hinged Right/Right
G20013 Hinged Left/Left

ENERGY STAR® Listed Commercial Refrigerator
For full listing visit energystar.gov

SPECIFICATIONS

DIMENSIONAL DATA	
FH Capacity cu. ft.	46.02 (1303 L)
HH Capacity cu. ft.	45.89 (1300 L)
Length in.	52-1/8 (132.4 cm)
Depth in.	32 (81.3 cm)
Overall Height in.[2]	83-3/8 (211.9 cm)
ELECTRICAL DATA	
Horsepower[1]	¼
Amps	4.3
Voltage	115/60/1
NEMA	5-15P
REFRIGERATION DATA	
Refrigerant	R-290
Charge Amount oz.	4.5 (127.6 g)
BTU	2100

When ordering please specify:
Voltage, Hinging, and Options



NEMA 5-15P

1. Based on 90°F ambient & 20°F evaporator.
2. 12" top clearance preferred for optimum performance & service access.
*Depth does not include 3-1/8" for door & handle.
†Overall height includes 6" (15.2 cm) for casters.
‡For additional voltage options contact factory.

Models listed to applicable UL, CSA, and NSF standards by an approved NRTL. Consult the factory or unit data plate for additional information.

Specifications subject to change without notice. Chart dimensions are rounded up to the nearest 1/16" (centimeters rounded up to the nearest tenth).

PLAN VIEW

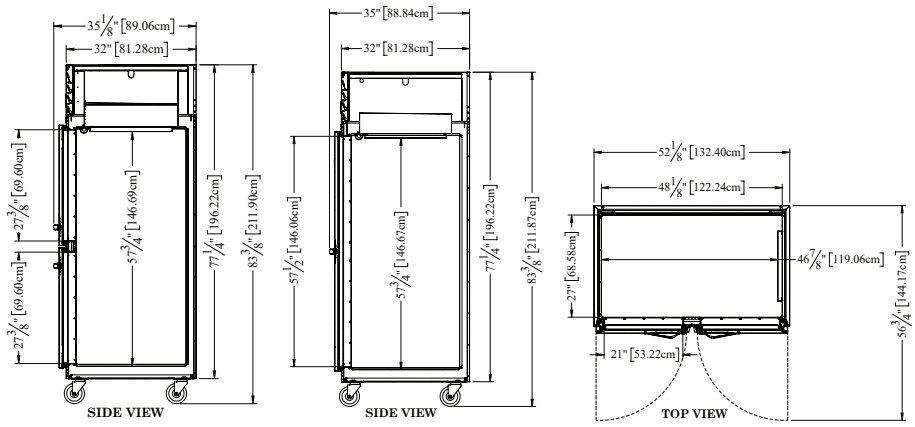

2026 © Traulsen • 4401 Blue Mound Road | Fort Worth, TX 76106 • 1 (800) 825-8220 • www.traulsen.com

G SERIES

2-SECTION SOLID DOOR REACH-IN REFRIGERATOR

Project Name:	Location:		AIA #:
Item #:	Qty:	Model #:	SIS #:

REFRIGERATION SYSTEM

• Self-contained, top-mounted system uses environmentally friendly, minimal GWP R-290 refrigerant

• High performance, balanced system operates at 34-38°F (1.1-3.3°C) to maintain consistent, food-safe temperatures

• Specialized, clock-wise airflow design

• Water-resistant microprocessor control with an LED display

• Easy to clean, front-facing condenser coil

• Thermostatic expansion valve metering device

• High humidity evaporator coil located outside the food zone; complete electro-deposition coating on coil

CABINET CONSTRUCTION

• Stainless steel exterior and interior

• Exterior top, back, and bottom is constructed of heavy gauge galvanized steel

• Load-Sure™ guard facilitates proper product loading

• Both the cabinet and door(s) are insulated with an average of 2" (5.1 cm) thick high density, non-CFC foamed-in-place polyurethane

• A set of (4) 6" (15.2 cm) high casters; (2) with brakes, (2) without brakes

• 9' cord & plug provided

DOORS

• Metal gasket-protecting door pan(s)

• Removable, plug cylinder locks

• Guaranteed for life cam-lift hinges

• Guaranteed for life metal workflow door handle(s)

• Door(s) are self-closing with a stay-open feature

• Magnetic, snap-in EZ-Clean™ door gasket(s) are chemical-resistant

• Door hinges include a concealed switch that automatically activate interior LED lighting

FACTORY-INSTALLED INTERIORS

• (3) adjustable, factory-installed coated wire shelves per section supported on shelf pins

FIELD-INSTALLED INTERIOR/SUPPORT OPTIONS

• See trayslide versatility chart below

• Additional shelves

• Set of (4) 4-1/8" (10.5 cm) casters; (2) with brakes, (2) without brakes

• Set of (4) 6" (15.2 cm) adjustable legs

• Set of (4) 6" (15.2 cm) flanged legs

WARRANTY

Both a six-year parts and labor warranty, and an additional one-year compressor parts warranty (for a total of seven years) are provided standard.

OPTIONAL ACCESSORY TRAYSLIDES

TRAYSLIDE DRAWINGS	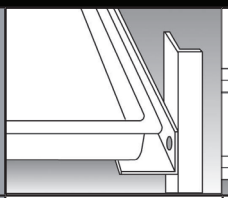	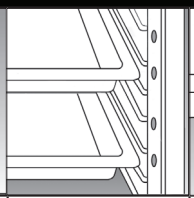	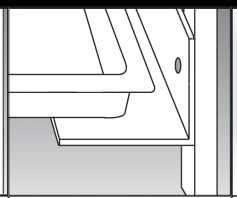	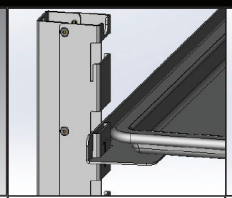	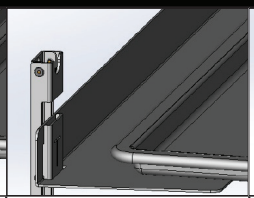	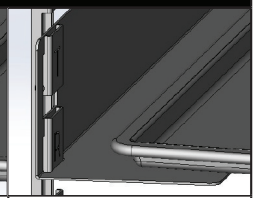
TRAYSLIDE OFFERING	#1 (1) 18" x26" or (2) 14"x18"	#4 (Rod Type) (1) 18" x26"	Universal (1) 18" x26" or (2) 14"x18" or (2) 12"x20"	#1 EZ-Change (1) 18" x26" or (2) 14"x18"	Universal EZ-Change (1) 18" x26" or (2) 14"x18" or (2) 12"x20"	HD Universal EZ-Change (1) 18" x26" or (2) 14"x18" or (2) 12"x20"
SPACING CAPACITY DOOR SIZE	2" (28) Pairs Full Door 3" (19) Pairs Full Door 4" (14) Pairs Full Door 5" (11) Pairs Full Door	1-1/2" (38) Pairs Full Door	4" (14) Pairs Full Door 5" (11) Pairs Full Door 6" (9) Pairs Full Door	2" (26) Pairs Full Door 4" (13) Pairs Full Door	2-1/4" (22) Pairs Full Door 4-1/2" (11) Pairs Full Door	4-1/2" (11) Pairs Full Door 9" (5) Pairs Full Door

CAD and/or Revit Files Available

https://traulsen.kclcad.com

Approved by:	Approved by:	Date:

2026 © Traulsen • 4401 Blue Mound Road | Fort Worth, TX 76106 • 1 (800) 825-8220 • www.traulsen.com

ITEM# 32 - FREEZER, REACH-IN (1 EA REQ'D)

Traulsen G12010

Spec-Line G Series Freezer, Reach-in, one-section, self-contained, microprocessor control with LED display, stainless steel front, full-height solid door, hinged right, stainless steel sides & interior, (3) epoxy coated shelves (factory installed), LED interior lights, 6" high casters, eco-friendly R290 Hydrocarbon refrigerant, unit can be programmed to operate at -10°F, 1/2 HP, , cETLus, ETL-Sanitation

WITH CASTERS

G SERIES
1-SECTION SOLID DOOR REACH-IN FREEZER

Project Name:	Location:		AIA #:
Item #:	Qty:	Model #:	SIS #:

G SERIES - STAINLESS STEEL EXTERIOR & INTERIOR



HALF-HEIGHT MODELS

G12000	Hinged Right
G12001	Hinged Left

FULL-HEIGHT MODELS

G12010	Hinged Right
G12011	Hinged Left

SPECIFICATIONS

DIMENSIONAL DATA	
FH Capacity cu. ft.	23.43 (663.5 L)
HH Capacity cu. ft.	23.37 (661.8 L)
Length in.	29-7/8 (75.9 cm)
Depth in.	32 (81.3 cm)
Overall Height in.[2]	83-7/16 (211.9 cm)
ELECTRICAL DATA	
Horsepower[1]	½
Amps	6.5
Voltage	115/60/1
NEMA	5-15P
REFRIGERATION DATA	
Refrigerant	R-290
Charge Amount oz.	3.5 (99.2 g)
BTU	2220

When ordering please specify:
Voltage, Hinging, and Options



NEMA 5-15P

1. Based on 90°F ambient & -20°F evaporator.
2. 12" top clearance preferred for optimum performance & service access.
*Depth does not include 3-1/8" for door & handle.
†Overall height includes 6" (15.2 cm) for casters.
‡For additional voltage options contact factory.

Models listed to applicable UL, CSA, and NSF standards by an approved NRTL. Consult the factory or unit data plate for additional information.

Specifications subject to change without notice. Chart dimensions are rounded up to the nearest 1/16" (centimeters rounded up to the nearest tenth).

PLAN VIEW

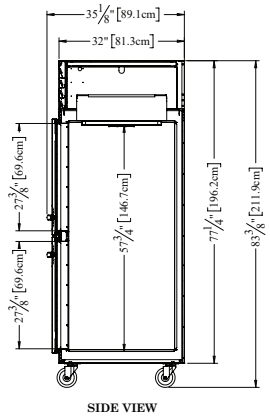

SIDE VIEW

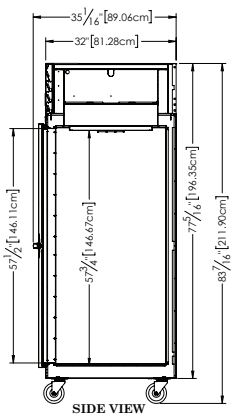

SIDE VIEW

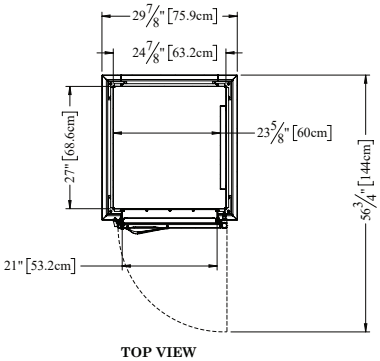

TOP VIEW

G SERIES
1-SECTION SOLID DOOR REACH-IN FREEZER

Project Name:	Location:		AIA #:
Item #:	Qty:	Model #:	SIS #:

REFRIGERATION SYSTEM

• Self-contained, top-mounted system uses environmentally friendly, minimal GWP R-290 refrigerant

• High performance, balanced system operates at -5 to 0°F (-20 to -18°C) to maintain consistent, food-safe temperatures

• Can be adjusted to operate as low as -10°F (-23°C) in 90°F or less ambient

• Specialized, clock-wise airflow design

• Water-resistant microprocessor control with an LED display

• Easy to clean, front-facing condenser coil

• Thermostatic expansion valve metering device

• High humidity evaporator coil located outside the food zone; complete electro-deposition coating on coil

CABINET CONSTRUCTION

• Stainless steel exterior and interior

• Exterior top, back, and bottom is constructed of heavy gauge galvanized steel

• Load-Sure™ guard facilitates proper product loading

• Both the cabinet & door(s) are insulated with an average of 2" (5.1 cm) thick high density, non-CFC foamed-in-place polyurethane

• A set of (4) 6" (15.2 cm) high casters; (2) with brakes, (2) without brakes

• 9' cord & plug provided

DOORS

• Metal gasket-protecting door pan(s)

• Removable, plug cylinder locks

• Guaranteed for life cam-lift hinges

• Guaranteed for life metal workflow door handle(s)

• Door(s) are self-closing with a stay-open feature

• Magnetic, snap-in EZ-Clean™ door gasket(s) are chemical-resistant

• Door hinges include a concealed switch that automatically activate interior LED lighting

FACTORY-INSTALLED INTERIORS

• (3) adjustable, factory-installed coated wire shelves per section supported on shelf pins

FIELD-INSTALLED INTERIOR/SUPPORT OPTIONS

• See trayslide versatility chart below

• Additional shelves

• Set of (4) 4-1/8" (10.5 cm) casters; (2) with brakes, (2) without brakes

• Set of (4) 6" (15.2 cm) adjustable legs

• Set of (4) 6" (15.2 cm) flanged legs

WARRANTY

Both a six-year parts and labor warranty, and an additional one-year compressor parts warranty (for a total of seven years) are provided standard.

OPTIONAL ACCESSORY TRAYSLIDES

TRAYSLIDE DRAWINGS	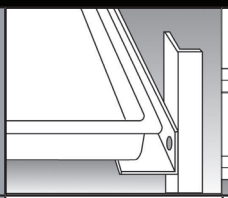	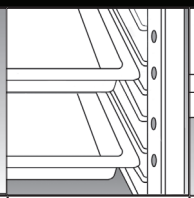	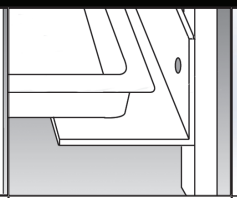	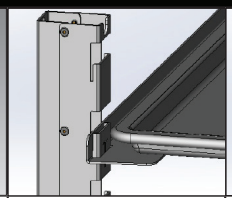	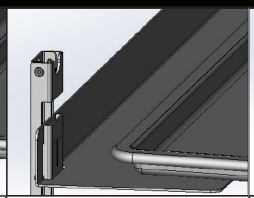	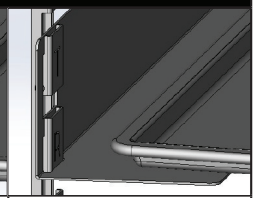
TRAYSLIDE OFFERING	#1 (1) 18" x26" or (2) 14"x18"	#4 (Rod Type) (1) 18" x26"	Universal (1) 18" x26" or (2) 14"x18" or (2) 12"x20"	#1 EZ-Change (1) 18" x26" or (2) 14"x18"	Universal EZ-Change (1) 18" x26" or (2) 14"x18" or (2) 12"x20"	HD Universal EZ-Change (1) 18" x26" or (2) 14"x18" or (2) 12"x20"
SPACING CAPACITY DOOR SIZE	2" (28) Pairs Full Door 3" (19) Pairs Full Door 4" (14) Pairs Full Door 5" (11) Pairs Full Door	1-1/2" (38) Pairs Full Door	4" (14) Pairs Full Door 5" (11) Pairs Full Door 6" (9) Pairs Full Door	2" (26) Pairs Full Door 4" (13) Pairs Full Door	2-1/4" (22) Pairs Full Door 4-1/2" (11) Pairs Full Door	4-1/2" (11) Pairs Full Door 9" (5) Pairs Full Door

CAD and/or Revit Files Available

https://traulsen.kclcad.com

Approved by:	Approved by:	Date:

2026 © Traulsen • 4401 Blue Mound Road | Fort Worth, TX 76106 • 1 (800) 825-8220 • www.traulsen.com

ITEM# 33-35 - NOT USED

- -

NOT USED

ITEM# 36 - MOBILE TABLE WITH DRAWER (2 EA REQ'D)

Stainless Steel Fabricator CUSTOM

MOBILE TABLE WITH DRAWER

ITEM# 37 - CABINET, MOBILE, WARMING & HOLDING (1 EA REQ'D)

Vulcan VBP18ES

Holding/Transport Cabinet, Institutional Series, mobile, capacity (18) 18" x 26" x 1" or (36) 12" x 20" x 2-1/2" pans, includes (15) pair of adjustable tray slides 1-1/2" OC, forced air blower, side mounted push handles, recessed control panel, electronic control with digital display, ambient to 190° F, 20 gauge stainless steel interior & exterior, cULus, UL EPH Classified

Item # _____ C.S.I. Section 11420

HEATED HOLDING

VBP SERIES
HOLDING & TRANSPORT CABINETS



Model VBP15

UL Listed. UL Listed to Canadian safety standards.
Classified by UL to NSF Standard #4.

SPECIFICATIONS

Vulcan Model No. VBP heated holding and transport cabinets. Blower motor for gentle and even temperature distribution. Complete with 5" heavy duty casters (2 swivel with brakes and 2 rigid) (VBP5 has 3" casters). Simple knob actuated electronic control with digital display for holding at temperatures up to 190°F. Adjustable racking will hold 18" x 26" or 12" x 20" pans or a combination of both on 1½" centers. Lip-load racking will hold 18" x 26" pans on 1½" centers. Shelving will hold a variety of pan sizes. Complete with universal tray slides adjustable on 1½" centers. Cabinet interior and exterior are both constructed out of 20 gauge stainless steel. Recessed side-mounted handles, magnetic action door latch, and full insulation; 1½" in side walls and 2" in top. Integrated steel frame for maximum strength. Field reversible doors. Complete with rear mounted cord and plug: NEMA 5-15 for 120 volts and NEMA 6-15 for 208-240 volts. One year limited parts and labor warranty. After the first year, 10-year parts warranty on the heating elements.

Units with adjustable racking:

- ☐ **VBP5** (see reverse for capacities)
- ☐ **VBP7** (see reverse for capacities)
- ☐ **VBP13** (see reverse for capacities)
- ☐ **VBP15** (see reverse for capacities)
- ☐ **VBP18** (see reverse for capacities)

Units with lip-load racking:

- ☐ **VBP7LL** (Fifteen 18" x 26" x 1" sheet pans)
- ☐ **VBP15LL** (Thirty 18" x 26" x 1" sheet pans)

Units with shelves:

- ☐ **VBP7SL** (Three Shelves)
- ☐ **VBP15SL** (Six Shelves)

STANDARD FEATURES

- ■ Holding Capacity:
  - 18" x 26" sheet pans.
  - 12" x 20" pans, or a combination of both on 1½" centers.
  - Other pan sizes on shelves.
- ■ Simple knob actuated electronic control with digital display for holding at temperatures of up to 190°F.
- ■ Blower motor for gentle and even temperature distribution.
- ■ Dutch doors (VBP15 and VBP18).
- ■ 5" heavy duty casters (2 swivel with brakes and 2 rigid) (3" on VBP5).
- ■ Recessed side mounted handles.
- ■ Universal tray slides adjustable on 1½" centers. VBP15 & VBP13 ship with 10 pairs of tray slides. VBP7 & VBP5 ships with 5 pairs, VBP18 ships with 15 pairs.
- ■ Interior and the exterior are both constructed out of 20 gauge stainless steel.
- ■ Fully insulated with 1½" in side walls and 2" in top.
- ■ Integrated steel frame for maximum strength.
- ■ Magnetic action door latch.
- ■ Field reversible doors.
- ■ Rear mounted cord.
- ■ Complete with cord and plug: NEMA 5-15 for 120 volts and NEMA 6-15 for 208-240 volts.
- ■ One year limited parts and labor warranty. After the first year, 10-year parts warranty on the heating elements.

OPTIONS

- ☐ 208/240 volt
- ☐ Humidity pan
- ☐ Full perimeter bumper
- ☐ Glass Dutch doors (VBP7 and VBP15 only)
- ☐ Wire shelves to sit on tray slides
- ☐ Additional tray slides
- ☐ Mechanical control

a division of ITW Food Equipment Group LLC
P.O. Box 696 ■ Louisville, KY 40201 ■ Toll-free: 1-800-814-2028 ■ Local: 502-778-2791 ■ Quote & Order Fax: 1-800-444-0602

HEATED HOLDING

VBP SERIES
HOLDING & TRANSPORT CABINETS

Drawings shown with optional bumper

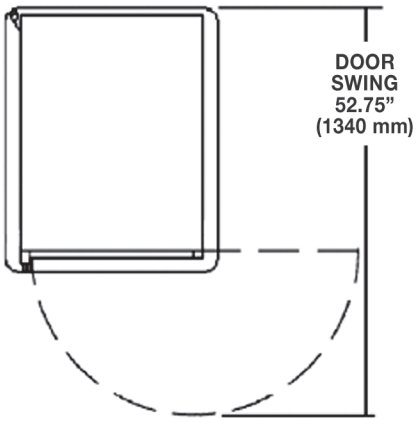

All Models Top View

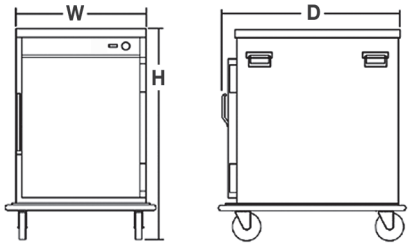

VBP5 Front & Side Views

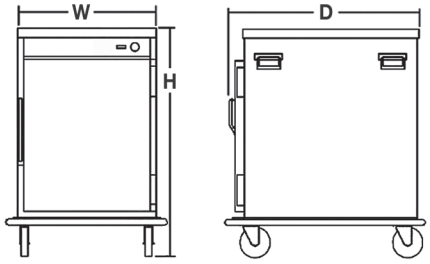

VBP7 Front & Side Views

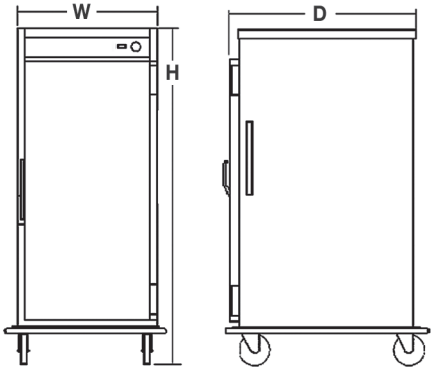

VBP13 Front & Side Views

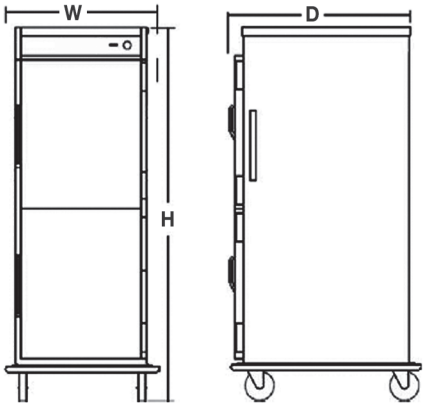

VBP15 & VBP18 Front & Side Views

MODEL	DIMENSIONS	CAPACITY		ELECTRICAL			SHIPPING WEIGHTS	
	EXTERIOR	12" x 20" x 2½" PANS	18" x 26" SHEET PANS	VOLTS	WATTS	AMPS	LBS	KG
VBP5	27¼" W x 33" D x 30½" H	10	5	120	1,500	12.5	173	79
VBP7	27¼" W x 33" D x 39" H	14	7	120	1,500	12.5	198	90
VBP7LL	27¼" W x 33" D x 39" H	NA	15	120	1,500	12.5	198	90
VBP7SL	27¼" W x 33" D x 39" H	Unit comes with 3 shelves		120	1,500	12.5	198	90
VBP13	27¼" W x 33" D x 59¾" H	26	13	120	1,500	12.5	270	123
VBP15	27¼" W x 33" D x 65¼" H	30	15	120	1,500	12.5	297	135
VBP15LL	27¼" W x 33" D x 65¼" H	NA	30	120	1,500	12.5	297	135
VBP15SL	27¼" W x 33" D x 65¼" H	Unit comes with 6 shelves		120	1,500	12.5	297	135
VBP18	27¼" W x 33" D x 73½" H	36	18	120	1,500	12.5	337	153

*per compartment
Optional bumper adds 3¼" to the width and 1⅝" to the depth.

a division of ITW Food Equipment Group LLC
P.O. Box 696 ■ Louisville, KY 40201 ■ Toll-free: 1-800-814-2028 ■ Local: 502-778-2791 ■ Quote & Order Fax: 1-800-444-0602

NOTE: In line with its policy to continually improve its products, Vulcan reserves the right to change materials and specifications without notice.

ITEM# 38 - MILK COOLER (1 EA REQ'D)

True Mfg. - General Foodservice TMC-49-S-SS-HC

Mobile Milk Cooler, forced-air, (12) 13" x 13" x 11-1/8" crate capacity, stainless steel drop front/hold-open flip-up lid with lock, 33 - 38°F temperature range, (3) heavy-duty floor racks, digital thermometer, stainless exterior, stainless steel interior & floor, 4" castors, view spec sheet for electrical information & certifications, Made in USA

TRUE MANUFACTURING CO., INC.
U.S.A. FOODSERVICE DIVISION
2001 East Terra Lane • O'Fallon, Missouri 63366-4434 • (636)240-2400
Fax (636)272-2408 • Toll Free (800)325-6152 • Intl Fax# (001)636-272-7546
Parts Dept. (800)424-TRUE • Parts Dept. Fax# (636)272-9471 • www.truemfg.com

Project Name: _____ *AIA #*

Location: _____

Item #: _____ *Qty:* _____ *SIS #*

Model #: _____

Model:
TMC-49-S-SS-HC

Milk Coolers:
Stainless Steel Exterior/Stainless Steel Interior with Hydrocarbon Refrigerant



TMC-49-S-SS-HC

- True's commitment to using the highest quality materials and oversized refrigeration systems provides the user with colder product temperatures, and lower utility costs in an attractive, durable school milk cooler.
- Factory engineered, self-contained, capillary tube system using environmentally friendly R290 hydrocarbon refrigerant that has zero (0) ozone depletion potential (ODP), & 0.02 global warming potential (GWP).
- High capacity, factory balanced, forced-air refrigeration system maintains milk temperatures of 33°F to 38°F (.5°C to 3.3°C). Colder holding temperatures provide better tasting milk, increased sales and less product waste.
- Exterior - all stainless steel exterior front, sides, back and top.
- All stainless steel self-service doors feature convenient drop front and "hold-open" flip-up top. Standard with door locks.
- Interior - Stainless steel walls and reinforced floor.
- Standard with heavy duty floor racks and convenient clean out drain.
- Designed to hold Twelve 13"L x 13"D x 11⅛"H (331 mm x 331 mm x 296 mm) milk crates.
- Entire cabinet structure is foamed-in-place using a high density, polyurethane insulation that has zero ozone depletion potential (ODP) and zero global warming potential (GWP).

ROUGH-IN DATA

Specifications subject to change without notice.
Chart dimensions rounded up to the nearest ⅛" (millimeters rounded up to next whole number).

Model	Doors	Capacity Crates	Crate Dimensions (inches) (mm) W	D	H	Floor Racks	Cabinet Dimensions (inches) (mm) W**	D†	H*	HP	Voltage	Amps	NEMA Config.	Cord Length (total ft.) (total m)	Crated Weight (lbs.) (kg)
TMC-49-S-SS-HC	2	12	13 331	13 331	11⅝ 296	3	49 1245	33 839	41⅝ 1058	⅓ N/A	115/60/1	2.7 N/A	5-15P	9 2.74	430 195

** Width does not include ⅛" (4 mm) each side for lid pins.
† Depth does not include 1" (26 mm) for front bumpers. Depth does not include 1" (26 mm) for rear bumpers.
* Height does not include 5⅛" (130 mm) for castors.

MADE WITH INNOVATION IN THE USA · ENERGY STAR · c UL us · CLASSIFIED · natural refrigerant

6/23 Printed in U.S.A.

APPROVALS:

AVAILABLE AT:

Model:
TMC-49-S-SS-HC

Milk Coolers:
Stainless Steel Exterior/Stainless Steel Interior with Hydrocarbon Refrigerant

STANDARD FEATURES

DESIGN
- True's commitment to using the highest quality materials and oversized refrigeration systems provides the user with colder product temperatures, and lower utility costs in an attractive, durable school milk cooler.

REFRIGERATION SYSTEM
- Factory engineered, self-contained, capillary tube system using environmentally friendly R290 hydrocarbon refrigerant that has zero (0) ozone depletion potential (ODP), & 0.02 global warming potential (GWP).
- High capacity, factory balanced refrigeration system that maintains cabinet temperatures of 33°F to 38°F (.5°C to 3.3°C) provide better tasting milk, increased sales and less product waste.
- State of the art, electronically commutated evaporator and condenser fan motors. ECM motors operate at higher peak efficiencies and move a more consistent volume of air which produces less heat, reduces energy consumption and provides greater motor reliability.
- Condensing unit accessed from behind back grill, slides out for easy cleaning and maintenance.

CABINET CONSTRUCTION
- Exterior - all stainless steel front, sides, back and top.
- Interior - Stainless steel walls and reinforced floor. Standard with heavy duty floor racks.
- Insulation - entire cabinet structure is foamed-in-place using a high density, polyurethane insulation that has zero ozone depletion potential (ODP) and zero global warming potential (GWP).
- Welded, heavy duty steel frame rail, black powder coated for corrosion protection.
- Frame rail fitted with four (4) easy roll, 4" (102 mm) diameter swivel castors (front castors lock in place).
- Designed to hold Twelve 13"L x 13"D x 11⅛"H (331 mm x 331 mm x 296 mm) milk crates.

DOORS
- All stainless steel self-service doors feature convenient drop front and "hold-open" flip-up top. Door support bumpers standard.
- Door locks standard.
- Magnetic door gaskets of one piece construction, removable without tools for ease of cleaning.

MODEL FEATURES
- Exterior digital temperature display.
- Evaporator is epoxy coated to eliminate the potential of corrosion.
- Convenient clean out drain with ½" (13 mm) NPT-PVC drain plug.
- Wide gaskets.
- This unit is Energy Star 4.0 Rated and meets Department of Energy 2017 standards.
- NSF/ANSI Standard 7 compliant for the storage and/or display of packaged or bottled product.

ELECTRICAL
- Unit completely pre-wired at factory and ready for final connection to a 115/60/1 phase, 15 amp dedicated outlet. Cord and plug set included.



115/60/1
NEMA-5-15R

OPTIONAL FEATURES/ACCESSORIES
Upcharge and lead times may apply.
- ❑ 6" (153 mm) standard legs (mounting plates required).
- ❑ 6" (153 mm) seismic/flanged legs (mounting plates required).
- ❑ Corner bumpers.

PLAN VIEW

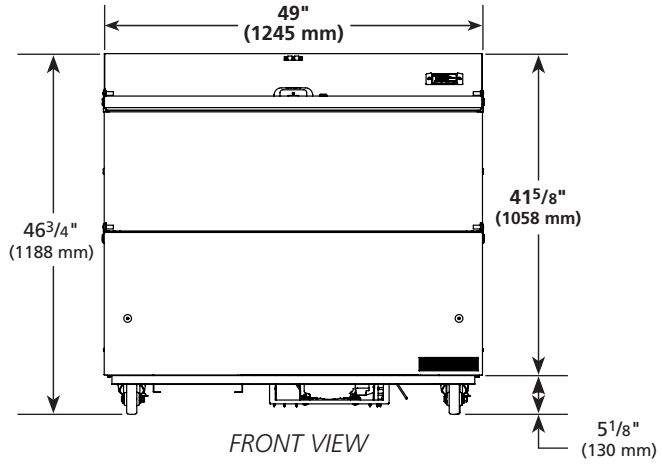

FRONT VIEW

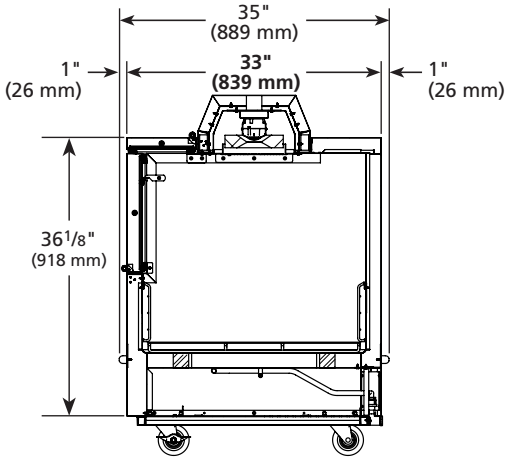

RIGHT VIEW

METRIC DIMENSIONS ROUNDED UP TO THE NEAREST WHOLE MILLIMETER

SPECIFICATIONS SUBJECT TO CHANGE WITHOUT NOTICE

Model	Elevation	Right	Plan	3D	Back
TMC-49-S-SS-HC					

TRUE MANUFACTURING CO., INC.
2001 East Terra Lane • O'Fallon, Missouri 63366-4434 • (636)240-2400 • Fax (636)272-2408 • Toll Free (800)325-6152 • Intl. Fax# (001)636-272-7546 • www.truemfg.com

ITEM# 39 - MOBILE SERVICE COUNTER (1 EA REQ'D)

Duke TST-60SS WITH EXTENDED TOP

Thurmaduke™ Solid Top Unit, mobile utility counter, 60"W x 32"D x 36"H, 16ga stainless steel top, 20ga stainless steel body & undershelves, 5" dia. gray poly swivel casters & brakes, NSF

WITH SNEEZEGUARD

ACCESSORIES

Mfr	Qty	Model	Spec
Duke	1	MOD-12-60	Extend width of top up to 12", for a 44" or less overall top, with stainless steel fixed brackets

Your Solutions Partner

Specifications

F.O.B. Sedalia, Missouri 65301



TST-46

Approval Stamp(s):

PRODUCT INFORMATION:
PROJECT: _____
ITEM: _____
QUANTITY: _____

MODEL:
Thurmaduke Serving Systems
Solid Top Units

❑ **TST-18**	18″ length units
❑ **TST-32**	32″ length units
❑ **TST-46**	46″ length units
❑ **TST-60**	60″ length units
❑ **TST-74**	74″ length units
❑ **TST-88**	88″ length units

TOP:

- ■ 16 gauge, 300 Series stainless steel
- ■ Sound-deadening

BODY:

- ❑ Choice of (12) powder coat paint colors
- ❑ Stainless steel body
- ■ NSF approved 5″ diameter polyurethane casters

  Note: Due to tipping hazard casters are not available on 18″ units. (Unless bolted to another unit)
- ■ Operator's side open to bottom shelf
- ■ 7″ high stainless steel rail on operator's side
- ■ End and side opposite operator fully enclosed
- ■ Intermediate and bottom shelves to match body

OPTIONS:

- ❑ 14 gauge tops
- ❑ Internal Locking device
- ❑ Pass-Thru construction
- ❑ Foodshields
- ❑ Workshelves
- ❑ Trayslides
- ❑ Special length not listed
- ❑ Recessed top (to accommodate griddles, fryers, etc.)
- ❑ 6″ Stainless steel legs
- ❑ Veneered plastic laminate panels on body
- ❑ Powder coat paint colors
- ❑ Kickplates s/s or p/g
- ❑ 34″ ADA height (units finish at 33.5″). Adjustable height casters with 5/8″ adjustability allow leveling to 34″.

Agency Listings:

NSF

DUKE MANUFACTURING CO.
2305 N. Broadway
St. Louis, MO 63102
800.735.3853 Toll Free
314.231.5074 Fax
www.dukemfg.com

Specification subject to change

WARNING For CA residents: go to www.dukemfg.com/prop65 for prop 65 warning

THURMADUKE SERVING SYSTEMS
SOLID TOP UNITS

A.I.A. File No. 35-C-13

Catalog No. TSS-SOLID

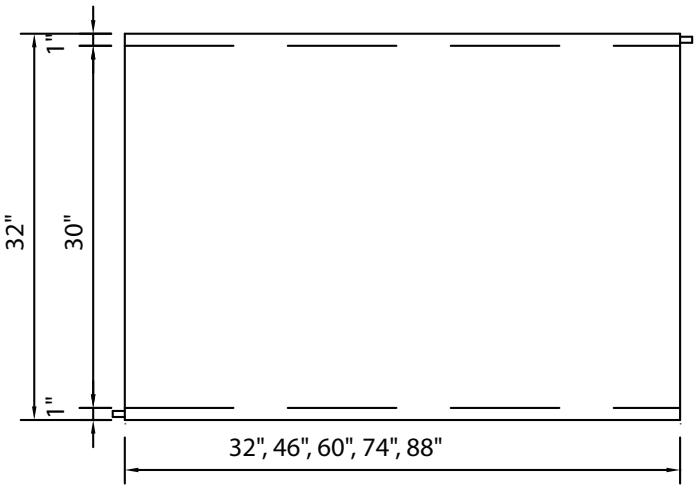

TOP VIEW

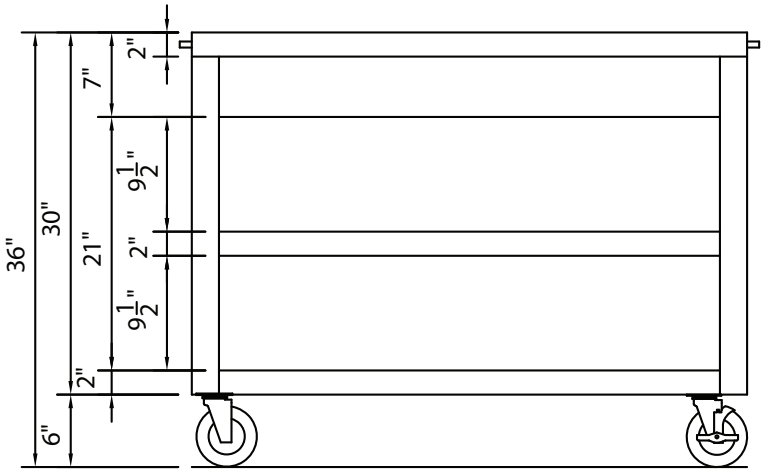

FRONT VIEW

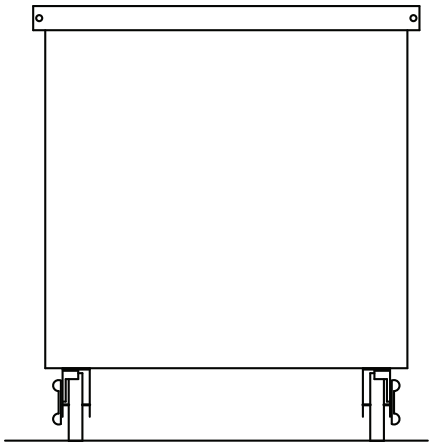

RIGHT SIDE VIEW

DIMENSIONS:

Freight Class: 150

Model	Length		Width		Height		Cube ft. crated	Weight	
	in	cm	in	cm	in	cm		lbs	kg
TST-18	18	45.7	32	81.3	36	91.4	22.0	200	90.9
TST-32	32	81.3	32	81.3	36	91.4	34.8	215	97.7
TST-46	46	116.8	32	81.3	36	91.4	47.7	314	142.7
TST-60	60	152.4	32	81.3	36	91.4	60.5	380	172.7
TST-74	74	188.0	32	81.3	36	91.4	73.3	446	202.7
TST-88	88	223.5	32	81.3	36	91.4	86.2	480	218.2

THURMADUKE SERVING SYSTEMS - SOLID TOP UNITS

Your Solutions Partner

Duke Manufacturing Co.
2305 N. Broadway
St. Louis, MO 63102

Phone: 314-231-1130
Toll Free: 1-800-735-3853
Fax: 314-231-5074

www.dukemfg.com

Printed in U.S.A
© 2020, Duke Manufacturing Co.

ITEM# 40 - DROP-IN, HOT WELLS (1 EA REQ'D)

Duke WWG3-SB

Waterless Hot Food Well Drop-In Unit, ganged, electric, dry operation, with (3) 12" x 20" hot food well, 46-1/4"W x 24-1/4"D x 12-3/4"H, stainless steel well, removable FDA approved silicone rubber liner, fully insulated galvanized exterior housing, touch screen control panel, without drain, 6' cord & plug, UL, cULus

Your Solutions Partner

Specifications

F.O.B. Sedalia, Missouri 65301

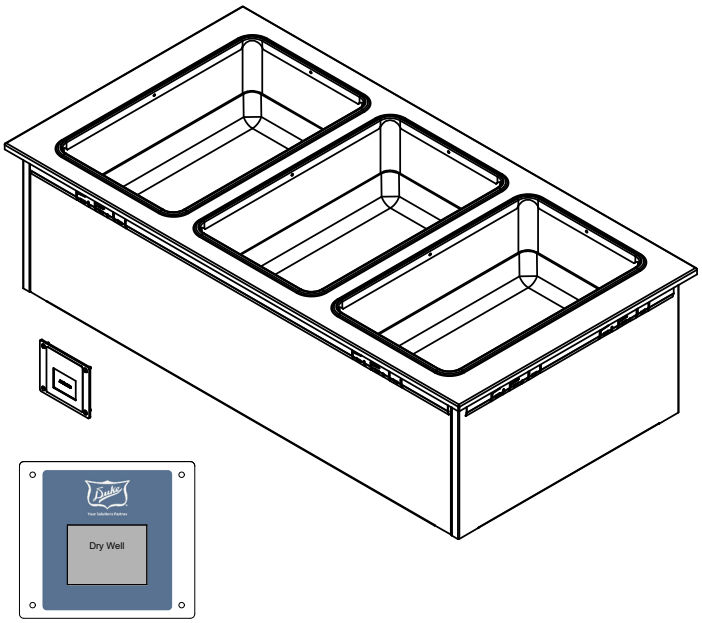

Model WWG3 Shown Above

OPTIONS:

- ❒ Hug Edge Top
- ❒ 3 Phase wiring (except WWG1)
- ❒ Designer Foodshields
- ❒ Telescope covers
- ❒ Adapter Plates
- ❒ Adapter Bars

Agency Listings:

NSF/ANSI 4

DUKE MANUFACTURING CO.
2305 N. Broadway
St. Louis, MO 63102
800.735.3853 Toll Free
314.231.5074 Fax
www.dukemfg.com

Approval Stamp(s):

PRODUCT INFORMATION:
PROJECT: _____
ITEM: _____
QUANTITY: _____

MODEL:
Drop-Ins - Hot Food
Electric Ganged Waterless Well

- ■ WWG1 18 ¼"L x 24 ¼"W x 12 ¾"H
- ■ WWG2 32 ¼"L x 24 ¼"W x 12 ¾"H
- ■ WWG3 46 ¼"L x 24 ¼"W x 12 ¾"H
- ■ WWG4 60 ¼"L x 24 ¼"W x 12 ¾"H
- ■ WWG5 74 ¼"L x 24 ¼"W x 12 ¾"H
- ■ WWG6 88 ¼"L x 24 ¼"W x 12 ¾"H

BODY:

- ■ Heavy gauge, 300 Series stainless steel top
- ■ Overhang on front, back and ends w/ 90 degree turn downs and w/ locking tabs
- ■ Die-stamped openings - 11-7/8" X 19-7/8"

Heat Compartments:

- ■ 6-1/2" deep stainless steel liner for dry operation only
- ■ Includes Silicone bottom pad
- ■ Fully Insulated
- ■ Rope element in each compartment

CONTROLS:

- ■ Standard intuitive, easy to use touch screen control - One control for all wells
- ■ Easily adjusted presets LOW/MED/HIGH
- ■ Built in WIFI and Bluetooth for future connectivity.

EXTERIOR HOUSING:

- ■ Heavy gauge paint grip steel

Specification subject to change

WARNING For CA residents: go to www.dukemfg.com/prop65 for prop 65 warning

SS-1252 Drop In Ganged Waterless Well

REV D 10/31/2025

PRODUCT HOLDING UNIT - Ganged Waterless Well

Catalog No. Hot Holding

A.I.A. File No. 35-C-13

A.I.A. File No. 35-C-13

Catalog No. Hot Holding

PRODUCT HOLDING UNIT - Ganged Waterless Well

Drop-IN Ganged Waterless Well

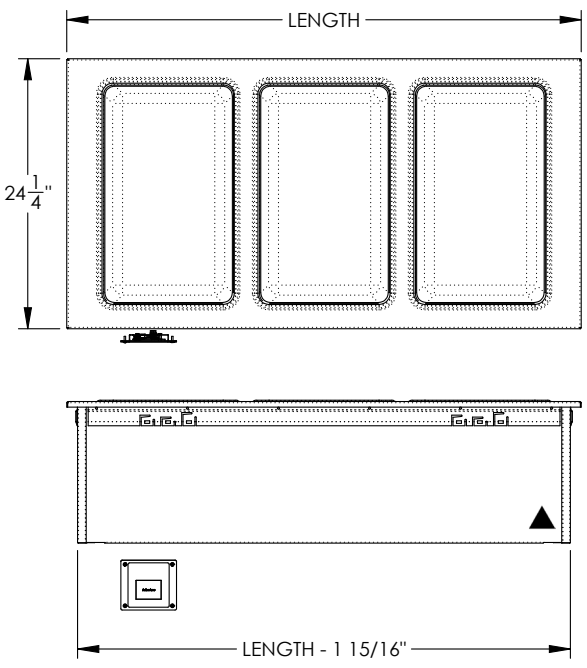

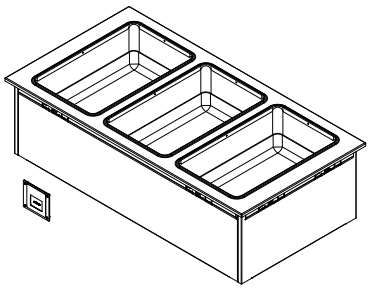

▲ Electrical Connection

Control Specification

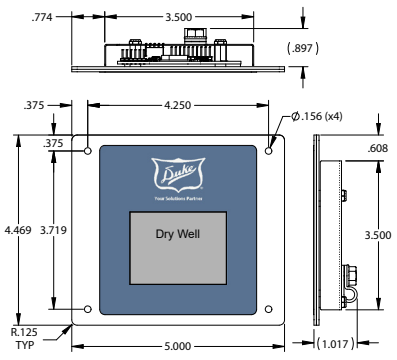

Control Cutout

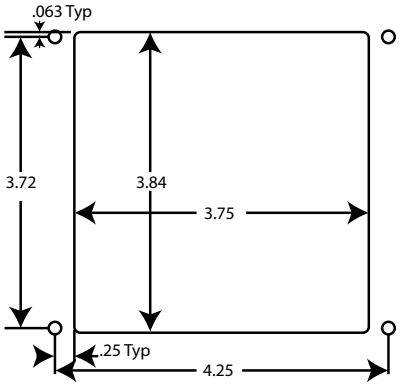

DIMENSIONS:

Freight Class: 100

Model	Length		Width		Height		Top Openings	Cutout Length		Cutout Width		Control Panels	Cube ft. Crated	Crated Ship Weight	
	in	cm	in	cm	in	cm		in	cm	in	cm			lbs	kg
WWG1	18.25	46.4	24.25	61.6	12.75	32.4	1	17.0	43.2	23.0	58.4	1	8.2	43	19.6
WWG2	32.25	81.9	24.25	61.6	12.75	32.4	2	31.0	78.7	23.0	58.4	1	13.0	75	34.1
WWG3	46.25	117.5	24.25	61.6	12.75	32.4	3	45.0	114.3	23.0	58.4	1	17.7	90	40.9
WWG4	60.25	153.0	24.25	61.6	12.75	32.4	4	59.0	149.9	23.0	58.4	1	22.5	115	52.3
WWG5	74.25	188.6	24.25	61.6	12.75	32.4	5	73.0	185.4	23.0	58.4	1	27.2	140	63.6
WWG6	88.25	224.2	24.25	61.6	12.75	32.4	6	87.0	221.0	23.0	58.4	1	32.0	220	100.0

ELECTRICAL SPECIFICATIONS:

Model	120V 665W			208V 500W			240V 665W		
	Watt	Amps	NEMA	Watt	Amps	NEMA	Watt	Amps	NEMA
WWG1	749	6.2	5-15	584	2.8	6-20	749	3.1	6-20
WWG2	1414	11.8	5-15	1084	5.2	6-20	1414	5.9	6-20
WWG3	2083	17.4	L5-30	1588	7.6	6-20	2083	8.	6-20
WWG4	2748	22.9	L5-30	2088	10	6-20	2748	11.5	6-20
WWG5	3417	28.5	5-50	2592	12.5	6-20	3417	14.2	6-20
WWG6	N/A	N/A	N/A	3092	14.9	L6-30	4082	17.0	L6-30

Duke Manufacturing Co.
2305 N. Broadway
St. Louis, MO 63102
Phone: 314-231-1130
Toll Free: 1-800-735-3853
Fax: 314-231-5074
www.dukemfg.com

Printed in U.S.A

© 2025, Duke Manufacturing Co.

ITEM# 41 - MOBILE SERVICE COUNTER (1 EA REQ'D)

Duke TST-60SS

Thurmaduke™ Solid Top Unit, mobile utility counter, 60"W x 32"D x 36"H, 16ga stainless steel top, 20ga stainless steel body & undershelves, 5" dia. gray poly swivel casters & brakes, NSF

WITH SNEEZEGUARDS AND TRAY SLIDES

Your Solutions Partner

Specifications

F.O.B. Sedalia, Missouri 65301



TST-46

Approval Stamp(s):

PRODUCT INFORMATION:
PROJECT: _____
ITEM: _____
QUANTITY: _____

MODEL:
Thurmaduke Serving Systems
Solid Top Units

❑ **TST-18**	18″ length units
❑ **TST-32**	32″ length units
❑ **TST-46**	46″ length units
❑ **TST-60**	60″ length units
❑ **TST-74**	74″ length units
❑ **TST-88**	88″ length units

TOP:

- ■ 16 gauge, 300 Series stainless steel
- ■ Sound-deadening

BODY:

- ❑ Choice of (12) powder coat paint colors
- ❑ Stainless steel body
- ■ NSF approved 5″ diameter polyurethane casters

  Note: Due to tipping hazard casters are not available on 18″ units. (Unless bolted to another unit)
- ■ Operator's side open to bottom shelf
- ■ 7″ high stainless steel rail on operator's side
- ■ End and side opposite operator fully enclosed
- ■ Intermediate and bottom shelves to match body

OPTIONS:

- ❑ 14 gauge tops
- ❑ Internal Locking device
- ❑ Pass-Thru construction
- ❑ Foodshields
- ❑ Workshelves
- ❑ Trayslides
- ❑ Special length not listed
- ❑ Recessed top (to accommodate griddles, fryers, etc.)
- ❑ 6″ Stainless steel legs
- ❑ Veneered plastic laminate panels on body
- ❑ Powder coat paint colors
- ❑ Kickplates s/s or p/g
- ❑ 34″ ADA height (units finish at 33.5″). Adjustable height casters with 5/8″ adjustability allow leveling to 34″.

Agency Listings:

NSF

DUKE MANUFACTURING CO.
2305 N. Broadway
St. Louis, MO 63102
800.735.3853 Toll Free
314.231.5074 Fax
www.dukemfg.com

Specification subject to change

WARNING For CA residents: go to www.dukemfg.com/prop65 for prop 65 warning

THURMADUKE SERVING SYSTEMS - SOLID TOP UNITS

Catalog No. TSS-SOLID

A.I.A. File No. 35-C-13

THURMADUKE SERVING SYSTEMS
SOLID TOP UNITS

A.I.A. File No. 35-C-13

Catalog No. TSS-SOLID

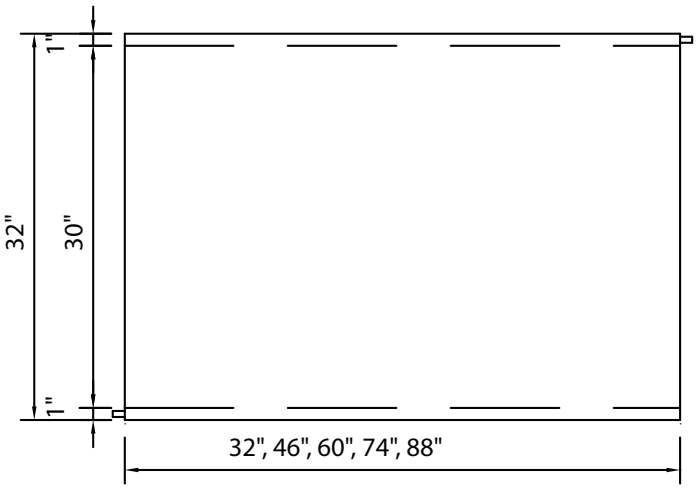

TOP VIEW

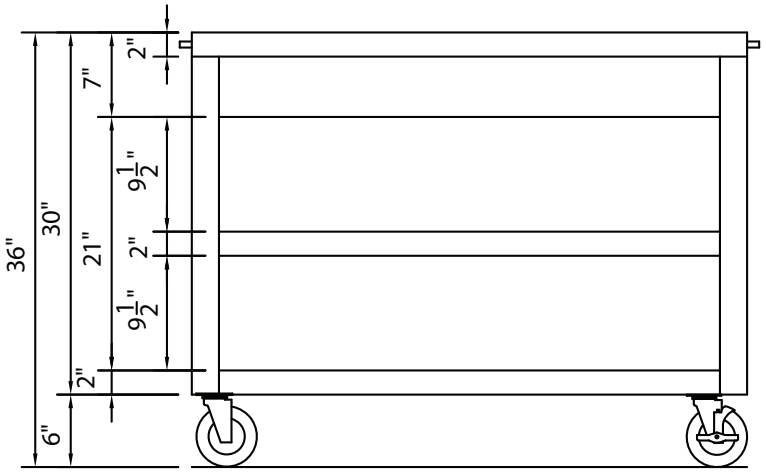

FRONT VIEW

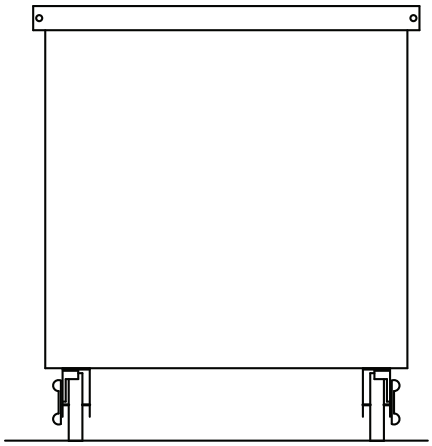

RIGHT SIDE VIEW

DIMENSIONS:

Freight Class: 150

Model	Length		Width		Height		Cube ft. crated	Weight	
	in	cm	in	cm	in	cm		lbs	kg
TST-18	18	45.7	32	81.3	36	91.4	22.0	200	90.9
TST-32	32	81.3	32	81.3	36	91.4	34.8	215	97.7
TST-46	46	116.8	32	81.3	36	91.4	47.7	314	142.7
TST-60	60	152.4	32	81.3	36	91.4	60.5	380	172.7
TST-74	74	188.0	32	81.3	36	91.4	73.3	446	202.7
TST-88	88	223.5	32	81.3	36	91.4	86.2	480	218.2

THURMADUKE SERVING SYSTEMS - SOLID TOP UNITS

Your Solutions Partner

Duke Manufacturing Co.
2305 N. Broadway
St. Louis, MO 63102

Phone: 314-231-1130
Toll Free: 1-800-735-3853
Fax: 314-231-5074

www.dukemfg.com

Printed in U.S.A
© 2020, Duke Manufacturing Co.

ITEM# 42 - DROP-IN, HOT/COLD/FREEZE WELLS (1 EA REQ'D)

Duke HCF-3

Hot/Cold/Freeze Drop-In Food Well Unit, 48-13/16"W x 25-1/2"D x 25-13/16"H, flush mount pans, (3) 12" x 20" individual pan, individual wired remote digital controls for hot or cold operation, individual drain, 10 ft. cord & plug, cULus, UL EPH Classified

Specifications

F.O.B. Sedalia, Missouri 65301

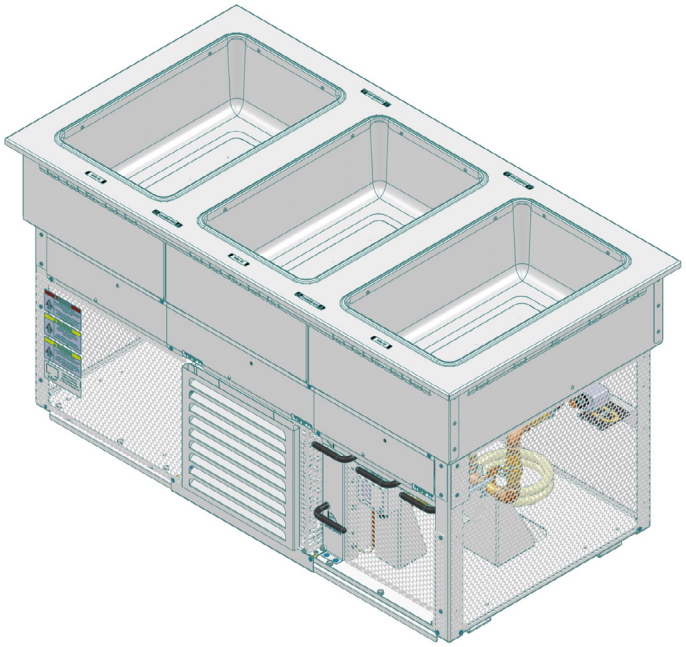

Model HCF-3 Shown

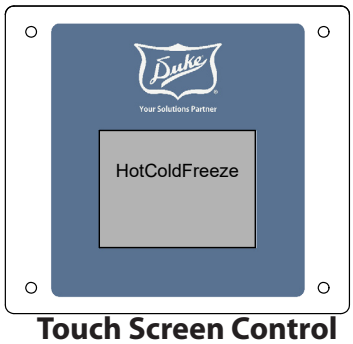

Touch Screen Control
can be mounted in cabinet body

OPTIONS:

- ❒ No drain, dry heat only with removable non-stick liner
- ❒ Top, Hugged (Low Profile)

DUKE MANUFACTURING CO.
2305 N. Broadway
St. Louis, MO 63102
800.735.3853 Toll Free
314.231.5074 Fax
www.dukemfg.com

SS-1283 Duke HotColdFreeze - R290

Approval Stamp(s):

PRODUCT INFORMATION:
PROJECT: _____
ITEM: _____
QUANTITY: _____

MODEL:
Duke HotColdFreeze™

- ❒ HCF-1 1 Wells
- ❒ HCF-2 2 Wells
- ❒ HCF-3 3 Wells
- ❒ HCF-4 4 Wells
- ❒ HCF-5 5 Wells

BODY:

- Top Mount with flush mount pans
- Stainless Steel - formed, welded, and polished to high finish
- Drains at each well
- Top, Standard (90º Turn Down)

CAPACITIES:

- Standard 12" x 20" steam table pans
- 2-1/2", 4" and 6" deep

CONTROLS:

- Intuitive, easy to use touch screen control changes mode of operation
- 3 wet heat, 3 dry heat, 3 refrigerated and 1 freeze mode.
- 1 control per food well
- Controls have a built-in Wifi modem and redundant controls capabilities for future activation.
- Unit shipped with 10" cable installed between control and touchscreen. 6' Cables are supplied loose to remote mount the controls, one per well.
- Complies with part 15 of the FCC rules.

Refrigeration:

- 5 Year compressor replacement
- Compressor slides out 13.5" for easy service.
- Compressor enclosed in perforated Aluminum
- R290 Refrigerant A3

Serviceability:

- Unit can be serviced in counter, no need to remove.
- Ten foot Cord and plug supplied.

CERTIFICATIONS:

Specification subject to change

WARNING For CA residents: go to www.dukemfg.com/prop65 for prop 65 warning

ANSI/ NSF 169

REV E 10/10/2025

PRODUCT HOLDING UNIT - Duke HotColdFreeze™

Catalog No. Duke HotColdFreeze™

A.I.A. File No. 35-C-13

Duke HOTCOLDFREEZE™

A.I.A. File No. 35-C-13

Catalog No. Duke HotColdFreeze™

PRODUCT HOLDING UNIT - Duke HotColdFreeze™

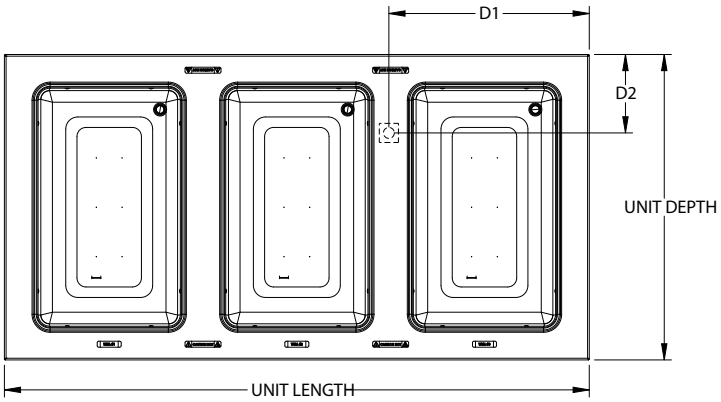

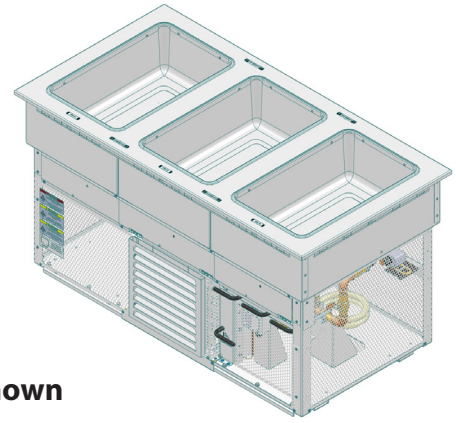

Model HCF-3 Shown

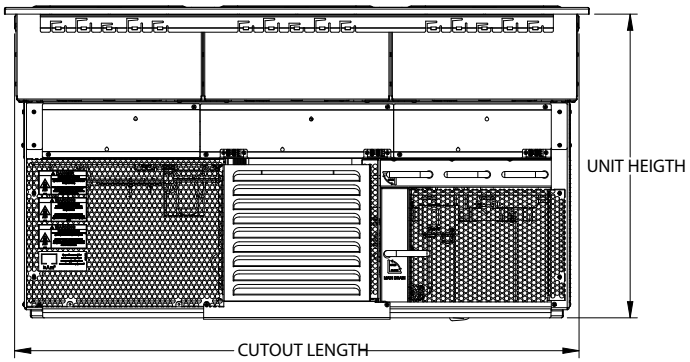

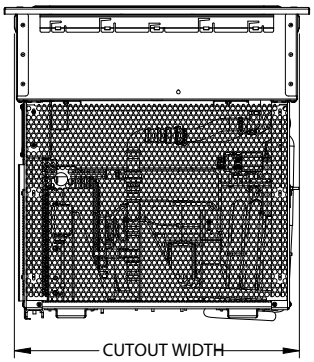

Control Specifications

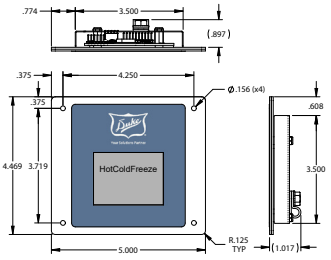

ELECTRICAL SPECIFICATIONS:

Model	120V/60Hz		120 / 208V 60Hz		120 / 240V 60Hz		Refrigeration				Minimum Room Floor Area Required	
	Amps	NEMA	Amps	NEMA	Amps	NEMA		HP	Refrig.	Grams	(A) Square Meters (m²)	Square Feet (f²)
HCF-1	5.5	5-15P	5.5	L14-20P	5.5	L14-20P		1/3	R290 A3	100	4.785	51.51
HCF-2	10.7	5-15P	10.0	L14-20P	10.0	L14-20P		1/3	R290 A3	170	8.134	87.55
HCF-3	18.4	L5-30P	18.4	L14-30P	18.4	L14-30P		1/2	R290 A3	220	10.526	113.30
HCF-4	23.6	L5-30P	18.4	L14-30P	18.4	L14-30P		1/2	R290 A3	300	14.354	154.51
HCF-5	29.1	5-50P	28.4	14-50P	28.4	14-50P	Sys-1	1/3	R290 A3	170	10.526	113.30
							Sys-2	1/2	R290 A3	220		

Control Cutout

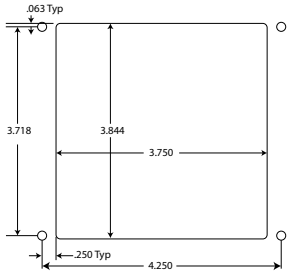

Note: Controls can be mounted in cabinet body

*For Optional Hugged Low Profile Edge add 1.31in/3.33cm to Units Lengths and Depths, add 0.44in/1.12cm to Height, and add 0.66in/1.68cm to D1 and D2

DIMENSIONS:

FREIGHT CLASS: 100

Model	Unit dimensions						Drain Location				Cutout Dimensions					
	Length*		Depth*		Height*		D1*		D2*		Length		Width		Cube ft. Crated	Weight
	in	cm	in	cm	in	cm	in	cm	in	cm	in	cm	in	cm		lbs / kg
HCF-1	17.50	44.45	25.5	64.77	25.13	63.83	4.50	11.43	4.63	11.76	16.31	41.43	24.31	61.75	12.5	95 / 43
HCF-2	33.19	84.30	25.5	64.77	25.38	64.47	24.06	61.11	4.00	10.16	31.94	81.13	24.31	61.75	21.0	145 / 65.8
HCF-3	48.81	123.98	25.5	64.77	25.38	64.47	9.25	23.50	9.00	22.86	47.63	120.98	24.31	61.75	28.9	198 / 89.8
HCF-4	64.50	163.83	25.5	64.77	25.38	64.47	24.63	62.56	9.06	23.01	63.31	160.81	24.31	61.75	38.0	287 / 130.2
HCF-5	80.19	203.68	25.5	64.77	25.38	64.47	24.06	61.11	4.00	10.16	78.94	200.51	24.31	61.75	45.0	340 / 154.2

Duke Manufacturing Co.
2305 N. Broadway
St. Louis, MO 63102

Phone: 314-231-1130
Toll Free: 1-800-735-3853
Fax: 314-231-5074

www.dukemfg.com

Your Solutions Partner

Printed in U.S.A.

© 2025, Duke Manufacturing Co.

ITEM# 43 - MOBILE SERVICE COUNTER (1 EA REQ'D)

Duke TST-32SS

Thurmaduke™ Solid Top Unit, mobile utility counter, 32"W x 32"D x 36"H, 16ga stainless steel top, 20ga stainless steel body & undershelves, 5" dia. gray poly swivel casters & brakes, NSF

Your Solutions Partner

Specifications

F.O.B. Sedalia, Missouri 65301



TST-46

Approval Stamp(s):

PRODUCT INFORMATION:
PROJECT: _____
ITEM: _____
QUANTITY: _____

MODEL:
Thurmaduke Serving Systems
Solid Top Units

- ❑ **TST-18** 18" length units
- ❑ **TST-32** 32" length units
- ❑ **TST-46** 46" length units
- ❑ **TST-60** 60" length units
- ❑ **TST-74** 74" length units
- ❑ **TST-88** 88" length units

TOP:

- ■ 16 gauge, 300 Series stainless steel
- ■ Sound-deadening

BODY:

- ❑ Choice of (12) powder coat paint colors
- ❑ Stainless steel body
- ■ NSF approved 5" diameter polyurethane casters

  Note: Due to tipping hazard casters are not available on 18" units. (Unless bolted to another unit)
- ■ Operator's side open to bottom shelf
- ■ 7" high stainless steel rail on operator's side
- ■ End and side opposite operator fully enclosed
- ■ Intermediate and bottom shelves to match body

OPTIONS:

- ❑ 14 gauge tops
- ❑ Internal Locking device
- ❑ Pass-Thru construction
- ❑ Foodshields
- ❑ Workshelves
- ❑ Trayslides
- ❑ Special length not listed
- ❑ Recessed top (to accommodate griddles, fryers, etc.)
- ❑ 6" Stainless steel legs
- ❑ Veneered plastic laminate panels on body
- ❑ Powder coat paint colors
- ❑ Kickplates s/s or p/g
- ❑ 34" ADA height (units finish at 33.5"). Adjustable height casters with 5/8" adjustability allow leveling to 34".

Agency Listings:

NSF

DUKE MANUFACTURING CO.
2305 N. Broadway
St. Louis, MO 63102
800.735.3853 Toll Free
314.231.5074 Fax
www.dukemfg.com

Specification subject to change

WARNING For CA residents: go to www.dukemfg.com/prop65 for prop 65 warning

SS-1178 Thurmaduke - Solid Top

REV D 01/07/2025

THURMADUKE SERVING SYSTEMS - SOLID TOP UNITS

Catalog No. TSS-SOLID

A.I.A. File No. 35-C-13

THURMADUKE SERVING SYSTEMS SOLID TOP UNITS

A.I.A. File No. 35-C-13

Catalog No. TSS-SOLID

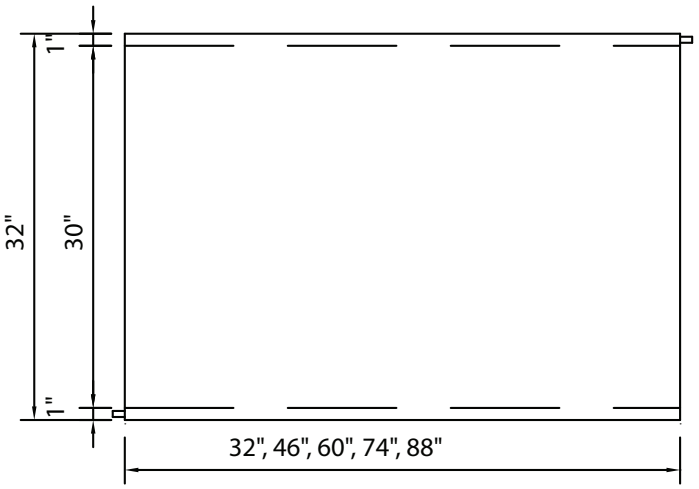

TOP VIEW

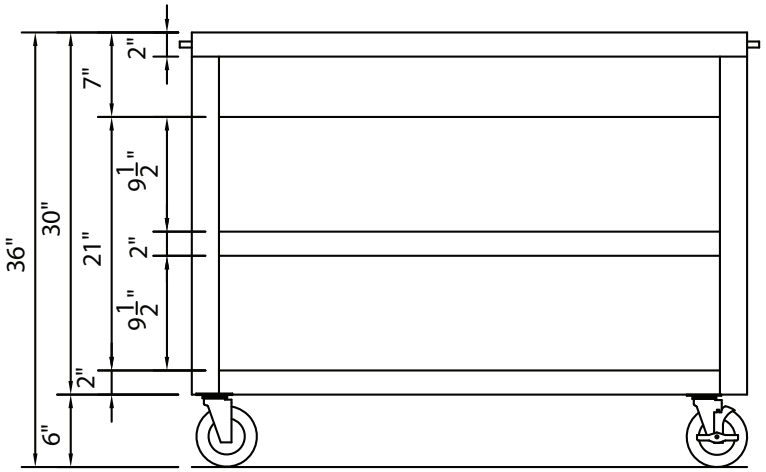

FRONT VIEW

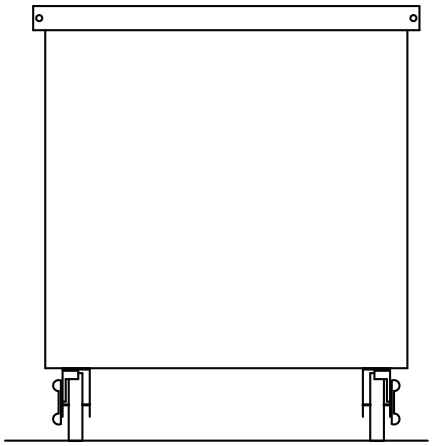

RIGHT SIDE VIEW

DIMENSIONS:

Freight Class: 150

Model	Length		Width		Height		Cube ft. crated	Weight	
	in	cm	in	cm	in	cm		lbs	kg
TST-18	18	45.7	32	81.3	36	91.4	22.0	200	90.9
TST-32	32	81.3	32	81.3	36	91.4	34.8	215	97.7
TST-46	46	116.8	32	81.3	36	91.4	47.7	314	142.7
TST-60	60	152.4	32	81.3	36	91.4	60.5	380	172.7
TST-74	74	188.0	32	81.3	36	91.4	73.3	446	202.7
TST-88	88	223.5	32	81.3	36	91.4	86.2	480	218.2

THURMADUKE SERVING SYSTEMS - SOLID TOP UNITS

Your Solutions Partner

Duke Manufacturing Co.
2305 N. Broadway
St. Louis, MO 63102

Phone: 314-231-1130
Toll Free: 1-800-735-3853
Fax: 314-231-5074

www.dukemfg.com

Printed in U.S.A
© 2020, Duke Manufacturing Co.

ITEM# 44 - POS STATION (1 EA REQ'D)

By Owner NOT IN FOOD SERVICE EQUIPMENT CONTRACT

POS STATION