PODESTA RANCH ELEMENTARY SCHOOL ROOF REPLACEMENT

RFP

Lodi Unified School District · 209-331-7181
jpatty@lodiusd.net · chbrown@lodiusd.net ·

Request For Price to Remove and replace the Roofs at Podesta Ranch Elementary School 9950 Windmill Park Dr. Stockton, CA 95209

SCOPE

OPEN TO B & C39 CONTRACTORS
-RECOVER APPROX. 31,000 SQ FEET OF LOW SLOPE ROOFING

--Flat Roof Areas
Remove existing walk pads, built-up roofing from all vertical surfaces including walls and roof curbs as well as all roof drain sump locations. Remove all roof jacks and prepare for a recover project.
Slice all blisters in the existing roofing and prepare for a recover project.
Remove any un-used vents or items identified by District, fill decking with like kind materials.
Remove and safely store the existing coping metal for re-installation. Re-install the existing coping metal with new internal butt plates sealed with non curing butyl sealant.
Supply and install new DensDeck prime over the existing roofing system and vertical walls.
Supply and Install 80 mil KEE FB single ply membrane adhered to all flat roof areas over insulation.
Supply & Install 80 mil KEE NF single ply membrane adhered at all walls over one layer of Dens Deck prime. Install up and over the wall 2” down the back side. Includes all vertical wall areas.
Supply and install KEE pipe boots, wrap all curbs in four pieces with adhered NF membrane.
Supply and install new walk pads from the roof hatches/ladder area to and around the HVAC units
Install new clad metal scuppers where needed
Supply and Install Dura Block pipe supports at all pipe/conduit locations.
Prepare and repaint the gas lines, drain baskets, and drain rings, safety yellow.
Prepare and paint any galvanized pipe that is rusted as needed. Repaint with similar exterior paint.
Pressure wash the lower metal roof areas and reseal all seams and fasteners with silicone coating.
Provide a 5-year workmanship installation warranty
Provide a 20-year Manufacturers warranty
Pay prevailing wage
Provide Insurance and Bonds

This work will be completed before July 22, 2027
Lodi Unified School District will be providing an Inspector for this Project

Provide manufacturer’s warranty for new material.
Contractor to provide 5-year workmanship warranty
Pay prevailing wage
Provide insurance bond

DATES FROM – SPRING 2027 – JULY 22, 2027

ACTIVITIES

Job walk will be- TBD

Bid date will be - TBD

SECTION 01 11 00

SUMMARY OF WORK

PART 1 — GENERAL

1.1 WORK REQUIRED BY CONTRACT DOCUMENTS

A. Drawings and general provisions of the Contract, including the Conditions of the Contract and Division 01 Specification Sections apply to this Section.

B. The work of this project consists of, but is not limited to the Scope of Work listed below. This scope is for information purposes only. It is the responsibility of the contractor to perform all work as shown, specified and required based upon the contract documents (drawings, specifications, addenda, etc.)

1.2 SUMMARY

A. Section includes a recover of the existing roofing systems as specified with all applicable details for a complete watertight warrantied roofing assembly per the manufacturers instructions.

B. Related Work Specified Elsewhere:

1. Section 06 - Rough Carpentry
2. Section 07 - Roof Insulation
3. Section 07 - KEE Membrane Roofing
4. Section 07 - Roofing Restoration
5. Section 07 - Sheet Metal Flashing and Trim

1.3 WORK COVERED BY CONTRACT DOCUMENTS

A. Project Identification: Podesta Ranch Elementary School Roof Replacement

B. Project Location: Podesta Ranch Elementary School 9950 Windmill Park Dr Stockton, CA 95209

C. Owner: Lodi Unified School District 880 N. Guild Ave. Lodi, CA 95240

D. General scope of work but not limited to;

1. **<u>Base Bid: All Roof Areas Per The Attached Site Map:</u>**

2. Includes removal and disposal of existing roofing system from all vertical walls, curbs, penetrations and roof drain sump locations. Slice all blisters in the existing roofing to lay flat for a complete prepared roof surface to recover. Remove and dispose of all walk pads.

3. Install one layer of ½” Dens Deck Prime insulation board, mechanically fasten with 16 screws and plates per 4’x8’ sheet.

4. Install one layer of 1/4" Dens Deck Prime insulation board with screws and plates, 8 per 4'x8' sheet at all vertical walls, curbs, etc.

5. Install one layer of KEE FB 80 mil membrane adhered at all horizontal surfaces per manufactures details.

6. Install one layer of KEE NF 80 mil membrane adhered at all vertical surfaces per manufacturers details.

7. Install new KEE prefabricated boots at all pipe penetrations.

8. Install new vents at all locations and incorporate into the roof system per manufacturers details.

9. Install new equipment support blocking with a 24 gauge sheet metal pan at the fixed pipe support locations.

10. Install new C-Port or equal rubber blocks at all condensate, electrical, etc. for support blocking. Install walkway pad under each support block.

11. Install KEE walkway pad from the ladder access or roof hatch to and around all HVAC units and under all support blocking.

12. Install new 24 gauge galvanized sheet metal skirt flashing at all HVAC and roof curbs.

13. Remove all coping and set aside for re-installation. Re-install all coping metal with new internal butt plates sealed with non curing butyl sealant and fastened with new rubber grommet screws.

14. Prepare and paint all gas line, conduit line, and galvanized pipe safety yellow.

15. Prepare and paint all drain baskets safety yellow.

16. All Lower Metal Roof Areas -

17. Pressure wash the existing roof area.

18. Clean all gutters and reseal all gutter seams.

19. Seal all metal laps and screws with Cool Sil Silicone Coating.

20. Alternate #1 -

21. Includes a complete pressure washing of all roof areas, remove and dispose of all debris per manufacturers specifications and installation guidelines for restoration over metal roof surfaces.

22. Install Garland Metal Primer at a rate of 1/2 gallon per 100 square feet over the entire roof area.

23. Install UniBond ST Self Adhesive Tape over all fasteners, penetrations, expansion joints, mod lines, and coping caps. Seal all penetrations throughout the metal roof surface.

24. Install Garland Pyramic Plus Lo at a rate of 1 gallon per 100 square feet of base coat and 1 gallon per 100 square feet top coat for a total of 2 gallons per 100 square feet per manufacturers specifications and installation guidelines.

1.4 WORK COMPLETED BY THE DISTRICT

A. No work will be completed by the district.

1.5 TYPE OF CONTRACT

A. Work will be completed under a single prime contract.

1.6 USE OF PREMISES

A. General: Contractor will have limited use of premises for construction operations.

B. Use of site: Limit use of premises to work areas required. Do not disturb portions of the project site beyond areas in which the work is indicated.

C. The building interior is off limits to the contractor. All access shall be from the exterior.

D. The point of exterior access must be approved by the owner.

E. Entrances: Keep all entrances serving the building clear and available to the owner, owner's employees, and emergency vehicles.

F. Use of existing building: Maintain existing building in a weather tight condition throughout the construction period. Repair damage caused by construction operations. Protect building and occupants during construction.

G. Vehicle Parking: Contractor parking is available on site and will need to be approved by the owner.

H. Assume full responsibility for protection and safekeeping of materials stored on premises. Coordinate the location of materials and equipment to be stored on premises. Provide barricades, barriers, and enclosures as required to ensure safety.

1.7 OWNERS OCCUPANCY REQUIREMENTS

A. The owner will occupy the building during the entire construction phase. Cooperate with the owner during construction operations to minimize owner conflicts and facilitate owner usage. Perform the work as to not interfere with owners operations.

B. A minimum of 72 hours notice is needed for all activities that will affect the owners operations.

1.8 WORK RESTRICTIONS

A. On site work hours: Work shall generally be performed from the hours of 7:00 am – 5:00 pm Monday through Friday except as otherwise indicated or approved by the owner.

1. Weekend hours, early morning hours, utility shut down, and noisy activity requires owner's authorization a minimum of 72 hours in advance.

1.9 UNIT PRICES

A. The following unit prices will be used to add or deduct from the total contract amount.

a. Unit-1 Replacement of dryrot wood roof decking, add a line items per square foot cost to proposal form.

b. Unit-2 Replacement of dryrot wood fascia board, add a line item per square foot cost to proposal form.

1.10 SCHEDULE OF ALTERNATES

A. Alternate #1 - All portable classrooms as shown on the attached site map.

1.11 PROJECT CONDITIONS

A. Proceed with roofing work only when existing and forecasted weather conditions will permit a unit of work to be installed in accordance with manufacturer's recommendations and warranty requirements.

B. Do not apply roofing insulation or membrane to damp deck surface.

C. Do not expose materials subject to water or solar damage in quantities greater than can be weatherproofed during same day.

1.12 SEQUENCING AND SCHEDULING

A. Sequence installation of roofing with related units of work specified in other sections to ensure that roof assemblies, including roof accessories, flashing, trim and joint sealers, are protected against damage from effects of weather, corrosion and adjacent construction activity.

B. Complete all roofing field assembly work each day. Phased construction will not be accepted

END OF SECTION 01 11 00 – SUMMARY OF WORK

SECTION 07 22 00

ROOF INSULATION

PART 1 – GENERAL

1. RELATED DOCUMENTS

A. Drawings and general provisions of the Contract, including the Conditions of the Contract and Division 01 Specification Sections apply to this section.

2. SUMMARY

A. Section includes roof insulation over the properly prepared deck substrate.

B. Related Sections:

1. Section 01 11 00 - Summary of Work
2. Section 01 30 00 - Submittals
3. Section 06 10 00 - Rough Carpentry
4. Section 07 50 50 - KEE Membrane Roofing
5. Section 07 62 00 – Sheet Metal Flashing and Trim

3. REFERENCES

A. American Society for Testing and materials (ASTM):

1. ASTM C165 Standard Test Method for Measuring Compressive Properties of Thermal Insulation.
2. ASTM C208 Standard Specification for Cellulosic Fiber Insulation Board.
3. ASTM C209 Standard Test Method for Cellulosic Fiber Insulating Board.
4. ASTM C272 Standard Test Method for Water Absorption of Core Materials for Structural Sandwich Constructions.
5. ASTM C1396 Standard Specification for Gypsum Wallboard.
6. ASTM C518 Standard Test Method for Steady-State Heat Flux Measurements and Thermal Transmission Properties by Means of the Heat Flow Meter Apparatus.
7. ASTM C578 Standard Specification for Perlite Thermal Insulation Board.
8. ASTM C728 Standard Test Methods for Fire Test of Roof Coverings.
9. ASTM C1289 Standard Specification for Faced Rigid Polyisocyanurate Thermal Insulation.
10. ASTM D5 Standard Test Method for Penetration of Bituminous Materials.
11. ASTM D36 Standard Test Method for Softening Point of Bitumen (Ring and Ball Apparatus).
12. ASTM D312 Standard Specification for Asphalt Used in Roofing.
13. ASTM D412 Standard Test Methods for Vulcanized Rubber and Thermoplastic Rubbers and Thermoplastic Elastomers-Tension.
14. ASTM D1621 Standard Test Method for Compressive Properties of Rigid Cellular Plastics.
15. ASTM D1622 Standard Test Method for Apparent Density of Rigid Cellular Plastics.

16. ASTM D2126 Standard Test Method for Response off Rigid Cellular Plastics to Thermal Humid Aging.
17. ASTM D2178 Standard Specification for Asphalt Glass Felts used in Roofing and Waterproofing.
18. ASTM D4601 Standard Specification for Asphalt-Coated Glass Fiber Base Sheet Used in Roofing.
19. ASTM D5147 Standard Sampling and Testing Modified Bituminous Sheet Material.

B. Factory Mutual Research (FM):
   1. Roof Assembly Classifications.

D. National Roofing Contractors Association (NRCA):
   1. Roofing and Waterproofing Manual.

E. Underwriters Laboratories, Inc. (UL):
   1. Fire Hazard Classifications.

F. Warnock Hersey (WH):
   1. Fire Hazard Classifications.

G. Sheet Metal and Air Conditioning Contractors National Association (SMACNA)

H. Steel Deck Institute, St. Louis, Missouri (SDI)

I. Southern Pine Inspection Bureau, Pensacola, Florida (SPIB)

J. Insulation Board, Polyisocyanurate (FS HH-I-1972)

K. Insulation Board, Thermal (Fiberboard) (FS LLL-1-535B)

1.4. SUBMITTALS

A. Product Data: Provide manufacturer's specification data sheets for each product in accordance with Division 01 Section Submittal Procedures. 013000.

B. Provide approval letters from insulation manufacturer for use of their insulation within this particular roofing system type.

C. Provide a sample of each insulation type.

D. Shop Drawings
   1. Submit manufacturer's shop drawings indicating complete installation details of tapered insulation system, tapered insulation crickets, including identification of each insulation block, sequence of installation, layout, drain locations, roof slopes, thicknesses, crickets and saddles.
   2. Shop drawing shall include: Outline of roof, location of drains, a complete board layout of tapered insulation components, thickness and the average "R" value for the completed insulation system.

E. Certification
   1. Submit roof manufacturer's certification that insulation fasteners furnished are acceptable to roof manufacturer.

2. Submit roof manufacturer's certification that insulation furnished is acceptable to roofing manufacturer as a component of roofing system and is eligible for roof manufacturer's system warranty.
3. Roof manufacturer's certification that insulation fasteners furnished are acceptable to roof manufacturer.
4. Roof manufacturer's certification that insulation furnished is acceptable to roofing manufacturer as a component of roofing system and is eligible for roof manufacturer's system warranty.
5. Wind uplift calculation, per CBC, Chapter 15, 1504 utilizing ASCE 7-10. Wind uplift shall be provided by the roofing system manufacturer. Calculation shall be reviewed by a CA licensed Structural II engineer.

1.5. QUALITY ASSURANCE

A. Fire Classification, ASTM E-108.

B. Manufacturer's Certificate: Certify that roof system furnished is approved by Factory Mutual, Underwriters Laboratories, Warnock Hersey or approved third party testing facility in accordance with ASTM E108, Class A for external fire and meets local or nationally recognized building codes.

C. Manufacturer's Certificate: Certify that the roof system is adhered properly to meet or exceed the requirements of FM 1-90.

D. Pre-installation meeting: Refer to Division 07 roofing specifications for pre-installation meeting requirements.

1.6. DELIVERY, STORAGE AND HANDLING

A. Deliver products to site with seals and labels intact, in manufacturer's original containers, dry and undamaged.

B. Store all insulation materials in a manner to protect them from the wind, sun and moisture damage prior to and during installation. Any insulation that has been exposed to any moisture shall be removed from the project site.

C. Keep materials enclosed in a watertight, ventilated enclosure (i.e. tarpaulins).

D. Store materials off the ground. Any warped, broken or wet insulation boards shall be removed from the site.

1.7. WARRANTY

A. Provide warranty coordinated with the requirements of other sections specifying roof products.

PART 2 – PRODUCTS

2.1 PRODUCTS, GENERAL

A. Refer to Division 01 Section "Common Product Requirements."

B. Basis of Design: Materials, manufacturer's product designations, and/or manufacturer's names specified herein shall be regarded as the minimum standard of quality required for work of this Section. Comply with all manufacturer and contractor/fabricator quality and performance criteria specified in Part 1.

C. Substitutions: Products proposed as equal to the products specified in this Section shall be submitted in accordance with Bidding Requirements and Division 01 provisions.
   1. Proposals shall be accompanied by a copy of the manufacturer's standard specification section. That specification section shall be reviewed by a professional engineer licensed in the state in which the installation is to take place. Substitution requests containing specifications without licensed engineer certification shall be rejected for non-conformance.
   2. Include a list of three (3) projects of similar type and extent, located within a one hundred mile radius from the location of the project. In addition, the three projects must be at least five (5) years old and be available for inspection by the Architect, Owner or Owner's Representative.
   3. Equivalency of performance criteria, warranty terms, submittal procedures, and contractual terms will constitute the basis of acceptance.
   4. The Owner's decision regarding substitutions will be considered final. Unauthorized substitutions will be rejected.

2.2 INSULATION MATERIALS

A. Thermal Insulation Properties and Approved Insulation Boards.
   1. Rigid Polyisocyanurate Roof Insulation; ASTM C1289:
      a. Qualities: Rigid, closed cell polyisocyanurate foam core bonded to heavy duty glass fiber mat facers.
      b. Thickness: **N/A**
      c. R-Value: **N/A**
      d. Attachment: Mechanically attached per roofing manufactures ASCE 7-16 Wind Uplift requirements.
      e. Compliances: UL, WH or FM listed under Roofing Systems Federal Specification HH-I-1972, Class 1.
      f. Acceptable Products:
         1) H-Shield; Hunter

   2. Tapered Polyisocyanurate Roof Insulation; ASTM C1289:
      a. Qualities: Factory Tapered, closed cell polyisocyanurate foam core bonded to heavy duty glass fiber mat facers.
      b. Thickness: Slope to drain
      c. Average R-Value: **N/A**
      d. Tapered Slope: (Field) **N/A**
      e. Tapered Slope: (Crickets) **N/A**
      f. Attachment: Insuloc insulation adhesive per roofing manufactures ASCE 7-16 Wind Uplift requirements.
      g. Compliances: UL, WH or FM listed under Roofing Systems Federal Specification HH-I-1972, Class 1
      h. Acceptable Products:
         1) H-Shield; Hunter

3. High Density Six Side Primed Fiberboard Roof insulation; ASTM C208
    a. Qualities: Rigid, composed of interlocking fibers factory blended treated with asphalt on six sides.
    b. Board Size: Four feet by Eight feet (4' x 8')
    c. Thickness: **N/A**
    d. Attachment: Mechanically attached per roofing manufacturers ASCE 7-16 wind uplift requirements.
    e. Compliances: UL, WH, FM listed under Roofing Systems. Federal Specification LLL-I-535-B.
    f. Acceptable Manufacturers:
        1) Blue Ridge; Celotex
        2) Temple Inland
        3) GAF Building Materials Corporation
        4) Georgia-Pacific
        5) Approved Equivalent

4. Dens-Deck Prime Roof Board
    a. Qualities: Nonstructural glass mat faced, noncombustible, water-resistant treated gypsum core panel.
    b. Board Size: Four feet by Eight feet (4'x8').
    c. Thickness: **1/2" at all roof deck areas, 1/4" at all vertical walls, curbs, etc.**
    d. R-Value: **.56**
    e. Attachment: Mechanically attached per roofing manufacturers ASCE 7-16 wind uplift requirements. Mechanically attached at all vertical installations with 8 screws and plates per 4x8 sheet.
    f. Compliances: UL, WH or FM listed under Roofing Systems.

2.3 RELATED MATERIALS

A. Fiber Cant and Tapered Edge Strips: Performed rigid insulation units of sizes/shapes indicated, matching insulation board or of perlite or organic fiberboard, as per the approved manufacturer.
    1. Acceptable Manufacturers:
        a. The Garland Company, Inc.
        b. Celotex
        c. Johns Manville
        d. GAF
        e. Approved Equivalent

B. Protection Board: Pre-molded semi-rigid asphalt composition board one half (1/2) inch.

C. Roof Board Joint Tape: Six (6) inches wide glass fiber mat with adhesive compatible with insulation board facers.

D. Asphalt: ASTM D312, Type III Steep Asphalt.

E. Roof Deck Insulation Adhesive: Insul-Lock HR - Dual-component, high rise foam adhesive with 45% rapidly renewable material content as recommended by insulation manufacturer and approved by FM indicated ratings.
    1. Tensile Strength (ASTM D412)……250 psi

2. Density (ASTM D1875)……..8.5 lbs./gal.
3. Viscosity (ASTM D2556)……22,000 to 60,000 cP.
4. 2 `Peel Strength (ASTM D903)…..17 lb/in.
5. 3 `Flexibility (ASTM D816)……Pass @ -70°F

F. Fasteners: Corrosion resistant screw fastener as recommended by roof membrane manufacturer.
1. Factory Mutual Tested and Approved with three (3) inches coated disc for I-90 rating, length required to penetrate metal deck one inch.
2. Screws: Concealor #14-13 DP1 as specified per ASCE 7 calculations.

PART 3 – EXECUTION

3.1 EXECUTION, GENERAL

A. Comply with requirements of Division 01 Section “Common Execution Requirements.”

3.2. EXAMINATION

A. Roofing contractor shall be responsible to verify that roof framing system is complete and ready to receive insulation system. Do not proceed with installation until unsatisfactory conditions have been corrected.
1. Verify that work which penetrates roof deck has been completed.
2. Verify that wood nailers are properly and securely installed.
3. Verify the roof deck has proper slope to drain.
4. Verify that penetrations are a minimum of 24” aways from all waterways and will not obstruct the proper roof drainage.
5. Examine surfaces for defects, rough spots, ridges, depressions, foreign material, moisture, and unevenness.
6. Do not proceed until defects are corrected.
7. Do not apply insulation until substrate is sufficiently dry.
8. Broom clean substrate immediately prior to application.
9. Use additional insulation to fill depressions and low spots that would otherwise cause ponding water.
10. Verify that temporary roof has been completed (IF REQUIRED)

3.3 INSTALLATION

A. Comply with built-up roofing manufacturer's written instructions, as submitted and reviewed by Architect during the submittal process, for installing roof insulation.

B. (Wood Roof Decks Only) Install one lapped HPR Base sheet course and mechanically fasten to substrate according to built-up roofing manufacturer's written instructions and as called for in these specifications and on the drawings.

C. Insulation Cant Strips: Install and secure preformed 45-degree insulation cant strips at junctures of built-up roofing with vertical surfaces or angle changes greater than 45 degrees.

D. Install tapered insulation under area of roofing to conform to slopes indicated. Install insulation with long joints of insulation in a continuous straight line with end joints staggered between rows, abutting edges and ends between boards. Fill gaps exceeding 1/4 inch with insulation.

1. Cut and fit insulation within 1/4 inch of nailers, projections, and penetrations.

E. Install insulation under area of roofing to achieve required thickness. Where overall insulation thickness is 2.7 inches or greater, install two or more layers with joints of each succeeding layer staggered from joints of previous layer a minimum of 6 inches in each direction.

F. Trim surface of insulation where necessary at roof drains so completed surface is flush and does not restrict flow of water.

G. Mechanically Fastened and Adhered Insulation: Install first layer of insulation to deck using mechanical fasteners specifically designed and sized for fastening specified board-type roof insulation to deck type.

1. Fasten first layer of insulation to resist uplift pressure at corners, perimeter, and field of the roof.

a. Field: 16 screws per 4 foot by 8 foot panel (2 square feet per screw).
b. Perimeter: 24 screws per 4 foot by 8 foot panel (1.33 square feet per screw).
c. Corners: 32 screws per 4 foot by 8 foot panel (1 square foot per screw).

2. Set each subsequent layer of insulation in insulation adhesive adhered per the roofing system manufactures recommendations.

H. Install cover boards over insulation with long joints in continuous straight lines with end joints staggered between rows. Offset joints of insulation below a minimum of 6 inches in each direction. Loosely butt cover boards together and adhere in place per manufacturers instructions. Tape joints if required by the roofing manufacturer.

I. Apply insulation adhesive to underside and immediately bond cover board to substrate.

J. Approved base layer of insulation board shall be fully attached to the deck with an approved mechanical fastening system, (all subsequent layers are to be adhered). As a minimum, the amount of fasteners shall be in accordance with manufacturer's recommendation ASCE 7-16.

K. Filler pieces of insulation require at least two fasteners per piece if size of insulation is less than four square feet.

L. Spacing pattern of fasteners shall be as per manufacturer's recommendations to meet the ASCE 7-16 requirements. Placement of any fastener from edge of insulation board shall be a minimum of three inches, and a maximum of six (6) inches.

M. Minimum penetration into deck shall be as recommended by the fastener manufacturer. There is a one (1) inch minimum for metal, wood and structural concrete decks where not specified by the manufacturer. For gypsum and cement-wood fiber decks, penetration shall be determined from pull-out test results with a minimum penetration of one and one-half (1 ½) inches.

N. Gypsum and cementitious wood fiber decks: Where the roof deck is visible from the building interior, the contractor shall ensure no penetration of fasteners through underside of the deck. Any holes or spalling caused by fastener installation shall be repaired by the roofing contractor. Where the new roof system thickness exceeds an amount so that a minimum of 1 ½ of penetration cannot be achieved with an Olympic TB Fastener, or approved equivalent, then (and only then) toggle bolts may be used to secure installation to the deck.

O. Tape joints of insulation as per manufacturer's requirements.

P. Attachment with Insulation Adhesive Approved by Factory Mutual (FM).

Q. Ensure all surfaces are clean, dry, free of dirt, debris, oils, loose ore embedded gravel, unadhered coatings, deteriorated membrane and other contaminants that may inhibit adhesion.

R. Apply insulation adhesive directly to the substrate using a ribbon pattern with one quarter to one half (1/4-1/2) inch wide beads 12 inches o.c., using either the manual applicator or an automatic applicator, at a rate of one (1) gallon per one hundred (150) square feet per cartridge.

S. Immediately place insulation boards into wet adhesive. Do not slide boards into place. Do not allow the adhesive to skin over before installing insulation boards.

T. Briefly step each board into place to ensure contact with the adhesive. Substrates with irregular surfaces may prevent the insulation board from making positive contact with the adhesive. Relief cuts or temporary weights may be required to ensure proper contact.

U. All boards shall be cut and fitted where the roof deck intersects a vertical surface. The boards shall be cut to fit a minimum of one quarter (1/4) inch away from the vertical surface.

V. Tape joints of insulation as per manufacturer's requirements.

3.4 CLEANING

A. Remove debris and cartons from roof deck. Leave insulation clean and dry, ready to receive roofing membrane.

5. CONSTRUCTION WASTE MANAGEMENT

A. Remove and properly dispose of waste products generated during installation. Comply with requirements of authorities having jurisdiction.

END OF SECTION

SECTION 07 54 20

KEE MEMBRANE ROOFING

1.GENERAL

1.1. RELATED DOCUMENTS

A. Drawings and general provisions of the Contract, including the Conditions of the Contract and Division 01 Specification Sections apply to this Section.

1.2. SUMMARY

A. Section includes an adhered Solar Bright FB 80 mil Evaloy KEE single ply roofing system over one layer of 1/2" Dens Dek prime and all associated details required by the manufacturer for a complete warrantable roofing assembly.

B. Related Work Specified Elsewhere:

1. Section 01: Summary of Work
2. Section 06: Rough Carpentry
3. Section 07: Insulation
4. Section 07: Sheet Metal Flashing and Trim
5. Section 07: Sealants

1.3. SUBMITTALS

A. Submit under provisions of Section 01300.

B. Product Data: Manufacturer's data sheets on each product to be used, including:
1. Preparation instructions and recommendations.
2. Storage and handling requirements and recommendations.
3. Installation instructions.

C. Shop Drawings: Submit shop drawings including installation details of roofing, flashing, fastening, insulation and vapor barrier, including notation of roof slopes, tapered insulation design if applicable, and fastening patterns of insulation and membrane, prior to job start.

D. Design Pressure Calculations: Submit design pressure calculations for the roof area in accordance with ASCE 7 and local Building Code requirements. Include a roof system attachment analysis report, certifying the system's compliance with applicable wind load requirements before Work begins. Report shall be reviewed by a Professional Engineer registered in the State of the Project who has provided roof system attachment analysis for not less than 5 consecutive years.

E. LEED Submittals: Provide documentation of how the requirements of Credit will be met:

1. List of proposed materials with recycled content. Indicate post-consumer recycled content and pre-consumer recycled content for each product having recycled content.
2. Product data and certification letter indicating percentages by weight of post-consumer and pre-consumer recycled content for products having recycled content.
3. Product reflectivity and emissivity criteria to qualify for one point under the LEED credit category, Credit 7.2, Landscape & Exterior Design to Reduce Heat Island - Roof.

F. Verification Samples: For each membrane product specified, two samples, minimum size 6 inches (150 mm) square, representing actual product, color, and patterns.

G. Provide written certification from the roofing system manufacturer certifying the applicator is currently authorized to install the specified roof system and ability to provide the specified warranty.

H. Sample Warranty: Provide an unexecuted copy of the warranty specified for this project clearly stating the terms required of the owner, contractor, and manufacturer.

I. Manufacturer's Certificates: Provide to certify products meet or exceed specified requirements.

J. Closeout Submittals: Provide manufacturer's maintenance instructions that include recommendations for periodic inspection and maintenance of all completed roofing work. Provide product warranty executed by the manufacturer. Assist Owner in preparation and submittal of roof installation acceptance certification as may be necessary in connection with fire and extended coverage insurance on roofing and associated work.

K. Any material submitted as equal to or better than the specified material must be accompanied by a report signed and sealed by a professional engineer licensed in the state in which the installation is to take place. This report shall show that the submitted equal meets the Design and Performance criteria in this specification. Substitution requests submitted without licensed engineer stamp will be rejected for non-conformance.

1.4. QUALITY ASSURANCE

A. Perform Work in accordance with NRCA Roofing and Waterproofing Manual and all manufacturer’s instructions.

B. Manufacturer Qualifications: Company specializing in manufacturing products specified with documented ISO 9001 certification and minimum of twelve years of documented experience and must not have been in Chapter 11 bankruptcy during the last five years.

C. Installer Qualifications: Company specializing in performing Work of this section with minimum five years documented experience and a certified Pre-Approved Garland Contractor.

D. Installer's Field Supervision: Maintain a full-time Supervisor/Foreman on job site during all phases of roofing work while roofing work is in progress.

E. Product Certification: Provide manufacturer's certification that materials are manufactured in the United States and conform to requirements specified herein, are chemically and physically compatible with each other, and are suitable for inclusion within the total roof system specified herein.

F. Source Limitations: Obtain all components of roof system from a single manufacturer. Secondary products that are required shall be recommended and approved in writing by the roofing system Manufacturer. Upon request of the Architect or Owner, submit Manufacturer's written approval of secondary components in list form, signed by an authorized agent of the Manufacturer.

G. Manufacturers Participation:

1. Pre-Application Job-Site Conference: Arranged by Applicator, with a minimum of 1 week advance notice; for review of storage, handling, protection, surface preparation, materials and application specifications; attended by applicator, his foreman, Architect, inspector, and manufacturer's agent.

2. Source Quality Control: Manufacturer shall have in place a documented, standardized quality control program such as ISO-9001.

3. When the project is in progress, the roofing system manufacturer will provide the following:

   a. Report progress and quality of the work as observed.

   b. Provide job site inspections a minimum of two (2) days a week throughout the course of construction.

   c. Provide electronic inspection reports submitted weekly to the Owner and/or Architect.

   d. Report to the Architect and/or Owner in writing any failure or refusal of the Contractor to correct unacceptable practices called to the Contractor's attention.

   e. Confirm after completion that manufacturer has observed no application procedures in conflict with the specifications other than those that may have been previously reported and corrected.

1.5. WARRANTY

A. Manufacturer: Provide a twenty (20) year warranty on manufacturers form. Warranty shall period shall begin on date of acceptance of roofing by Owner.

B. Manufacturer will provide the following services at years 2, 5, 10 & 15 at no cost to the owner.

1. Inspection by a technical service representative and delivery of a written inspection report documenting roof conditions.

2. General rooftop housekeeping, subject to limits but generally including removal of incidental debris.

C. Provide one warranty by a single approved manufacturer for membrane roof areas, standing seam metal roofing, coping metal systems and transitions between the material types.

D. Installer: Provide in required form for a period of five (5) years from date of acceptance by Owner.

E. Special Project Warranty: Submit roofing Installer's warranty, on warranty form at end of this Section, signed by Installer, covering the Work of this Section, including all components of roofing system such as membrane roofing, base flashing, roof insulation, fasteners, cover boards, substrate boards, vapor retarders (where included) , and walkway products, for the following warranty period:

1. Correct defective Work within a five (5) year period after Date of Substantial Completion.

2.PRODUCTS

2.1. KEE SINGLE-PLY ROOFING

A. Acceptable Products:

1. Acceptable Manufacturer or equal: The Garland Company, Inc.; 3800 E. 91st St., Cleveland, OH 44105. Local Representative: Rich Jones Phone: (559) 647-1196. rjones@garlandco.com Web Site: www.garlandco.com.

2. Roofing Membrane:

   a. Solar Bright Fleeceback 80 Mil Membrane (ASTM D 751)

   b. Membrane Thickness: (ASTM D 751) 80 mil nominal

   c. Breaking Strength (ASTM D 751): 325X324 lbf/in

   d. Tearing Strength (ASTM D 751): 89X109 lbf/in

   e. Factory Seam Strength (ASTM D 751) 295 lbf

   f. Solar Reflectivity (ASTM C 1549) 82% (White)

   g. Emissivity (ASTM C 1371) 91% (White)

   h. SRI (ASTM E1980) 109 (White)

B. The Products specified are intended and the Standard of Quality for the products required for this project. If other products are proposed the bidder must disclose in the bid the manufacturer and the products that they intend to use on the Project. If no manufacturer and products are listed, the bid may be accepted only with the use of products specified.

1. Bidder will not be allowed to change materials after the bid opening date.
2. If alternate products are included in the bid, the products must be equal to or exceed the products specified. Supporting technical data shall be submitted to the Architect/ Owner for approval prior to acceptance.
3. In making a request for substitution, the Bidder/Roofing Contractor represents that it has:
   a. Personally investigated the proposed product or method, and determined that it is equal or superior in all respects to that specified.
   b. Will provide the same guarantee for substitution as for the product and method specified.
   c. Will coordinate installation of accepted substitution in work, making such changes as may be required for work to be completed in all respects.
   d. Will waive all claims for additional cost related to substitution, which consequently become apparent.
   e. Cost data is complete and includes all related cost under his/her contract or other contracts, which may be affected by the substitution.
   f. Will reimburse the Owner for all redesign cost by the Architect for accommodation of the substitution.
4. Architect/ Owner reserves the right to be the final authority on the acceptance or rejection of any or all bids, proposed alternate roofing systems or materials that has met ALL specified requirement criteria.
5. Failure to submit substitution package, or any portion thereof requested, will result in immediate disqualification and consideration for that particular contractors request for manufacturer substitution.

2.2. UNDERLAYMENT

A. Slip Sheet: HPR Premium Glasbase Sheet; Install one layer of HPR Premium Glasbase sheet shingled uniformly to achieve one ply over the entire roof substrate. Shingle in direction of the slope of the roof to shed water.

1. HPR Premium Glasbase by The Garland Company

2.3. NAILERS

A. Douglas Fir; No. 2 or better, pressure treated; no creosote or asphalt preservatives allowed.

2.4. ROOF BOARD INSULATION

A. Roof Insulation Base Layer 4’ x 8’ max dimension: N/A

1. Thickness: N/A

2. R-Factor: Avg. N/A

3. Attachment Method: Mechanically attached with manufacturers #14 screws and 3” insulation plates, 16 per 4’x8’ sheet for the base layer and adhesive attachment for all additional layers.

B. Roof Insulation top layer: Georgia Pacific Dens Deck Prime Roof Board.

1. Max Dimension: 4’ x 8’

2. Thickness: 1/2” at all horizontal surfaces and 1/4” inch at all vertical surfaces.

3. Attachment Method: Mechanically attached with 16 screws and plates per 4’x8’ sheet per ASCE 7-16 requirements as produced by the membrane manufacturer. Mechanically attached at all vertical surfaces with 8 screws and plates per 4’x8’ sheet.

C. Tapered Insulation: Tapered roof board insulation to be used as required for tapered insulation system or tapered crickets. Hunter or equal, ASTM C 1289, Type II, Class 1, Grade 2, (20psi) polyisocyanurate insulation board.

1. Field Slope: __N/A__ inch per foot.

2. Sump Slope: _N/A_ inch per foot.

3. Cricket Slope:_N/A_ inch per foot as needed for crickets and proper slope.

4. Attachment Method: Mechanically Attached (base layer) Adhered in Insuloc HR insulation Adhesive (all additional layers) by The Garland Company.

2.5. FASTENERS

A. Heavy duty #14 threaded fastener with a #3 Phillips drive used with barbed fastening plate to secure the insulation board to the structural decking. It is used on minimum 22 gauge steel decks or minimum 15/32"

CDX plywood decks. It is also designed to offer an optimum combination of driving performance, back-out and corrosion resistance with excellent pullout performance.

1. TruFast #14 EHD Roofing Fasteners

B. Fastening Plate: A 2-3/8" diameter metal barbed fastening plate used with HP-X, CD-10 or HD 14-10 Fasteners for membrane or insulation securement. This plate can be used for membrane or insulation securement.

1. TruFast Metal Seam Plates, 2.4” barbed.

C. Insulation Fastening Plate: A nominal 3-inch metal plate used for insulation attachment in conjunction with the appropriate fastener.

1. TruFast Metal Insulation Plates, 3” round.

2.6. ACCESSORIES

A. Solar Bright 80 membrane shall be used for all flashing requirements to match the field membrane and warranty expectations selected for the roofing system.

B. Solar Bright Inside Corners: Pre-molded corner flashing for inside corners. 80 mil thickness. Color - White.

C. Solar Bright Outside Corners: Pre-molded corner flashing for outside corners. 80 mil thickness. Color - White.

D. Solar Bright T-Joint Covers: 40 mil thick non-reinforced PVC flashing cut into a 4.5 inch (114mm) diameter circle used to seal step-offs at splice intersections.

E. Solar Bright Pipe Flashings: A pre-molded flashing and clamping ring used for pipe penetrations. Available for 1 inch to 6 inch (25 - 152mm) diameter pipes.

F. Solar Bright Split Pipe Seals: Pre-fabricated flashing consisting of 80 mil reinforced Membrane for pipes 1 inch to 6 inch (25 - 152mm) in diameter. A split (cut) and overlap tab are incorporated to allow the pipe seal to be opened and wrapped around the pipe when it is not possible to pull a standard pipe flashing over a round penetration.

G. Solar Bright Non-Reinforced Flashing: 80 mil thick rolls 12 inches and 24 inches wide. Used for inside/ outside corners and field fabricated pipe flashings when use of pre-molded accessories is not feasible.

H. Solar Bright Heat Weldable Walkway Rolls: offering superior tear, puncture and weather resistance and designed to protect membrane in those areas exposed to repetitive foot traffic or other hazards. Walkway material may be heat welded to membrane using an automated heat welder or hand held heat welder. Walkway Rolls are 36 inches (914mm) wide by 60 feet (18.3 M) long and are nominal 80 mils thick.

I. Single ply Coated Sheet Metal: Provide where flashing, gravel stops and sheet metal are in contact with single ply roofing membrane. Install 22 gauge cleat all all edge metal conditions.

2.7. SOLVENT, SEALANT, AND ADHESIVES

A. As recommended by manufacturer.

B. Horizontal Applications (field); SolarBright FB Substate Adhesive 7003.

1. Weight: 8.4lbs
2. VOC: 3
3. Color: Black
4. Solids 70%

C. Vertical Applications (walls & curbs); SolarBright Low VOC Bonding Adhesive: Low VOC solvent-based contact adhesive that allows bonding of membrane to various porous and non-porous substrates.

1. Weight: 7.4lbs
2. VOC: 199
3. Color: Amber
4. Solids: 20%

3. EXECUTION

3.1. EXAMINATION

A. Do not begin installation until substrates have been properly prepared.

B. If substrate preparation is the responsibility of another installer, notify Architect of unsatisfactory preparation before proceeding.

C. Prepare surfaces using the methods recommended by the manufacturer for achieving the best result for the substrate under the project conditions.

D. Do not commence Work until all other work trades have completed jobs that require them to traverse the deck on foot or with equipment.

E. Proceed with installation only after unsatisfactory conditions have been corrected.

3.2. PREPARATION

A. Do not apply wet roofing, on wet application surface, or when temperature of deck less than 50 degrees F.

B. Provide entire roof system including treated wood nailers, Single-ply coated sheet metal, and coordination of items such as roof drains, sumps, jacks, etc.

C. Protect adjoining materials from stains particularly around perimeter of building; prevent debris from clogging roof drains.

D. Deck surface swept clean and dry; keep free of loose and foreign materials.

3.3. INSTALLATION

A. Install in conformance with referenced standards, manufacturer's written directions, as shown, and as specified.

1. Install insulation or membrane underlayment over the substrate with boards butted tightly together with no joints or gaps greater than 1/4 inch (6 mm). Stagger joints both horizontally and vertically if multiple layers are provided.

2. Secure insulation to the substrate with the required mechanical fasteners or insulation adhesive in accordance with the manufacturer's current application guidelines and as specified in section 07 54 20, 2.4, A, B, & C above.

3. Securely attach insulation to the roof deck. Attachment must have been successfully tested to meet or exceed the calculated uplift pressure required by Factory Mutual (FM I-90) & the International Building Code (ASCE-7) or ANSI/SPRI WD-1.

B. Application; Adhered system over roof deck

1. Position SolarBright membrane over the acceptable substrate. Fold membrane sheet back lengthwise so half the underside of the membrane is exposed.

2. Apply SolarBright Bonding Adhesive in accordance with the manufacturer's published instructions, to the exposed underside of the membrane and the corresponding substrate area. Do not apply Bonding Adhesive along the splice edge of the membrane to be hot air welded over the adjoining sheet. Allow the adhesive to dry until it is tacky but will not string or stick to a dry finger touch.

3. Roll the coated membrane into the coated substrate while avoiding wrinkles. Brush down the bonded section of the membrane sheet immediately after rolling the membrane into the adhesive with a soft bristle push broom to achieve maximum contact.

4. Fold back the un-bonded half of the sheet lengthwise and repeat the bonding procedures.

5. Position adjoining sheets to allow a minimum overlap of 2 inches (51mm).

6. Hot-air weld the SolarBright membrane sheets using the Automatic Hot Air Welding Machine or Hot Air Hand Welder in accordance with the manufacturer's hot air welding procedures.

7. Continue to install adjoining membrane sheets in the same manner, overlapping edges a minimum of 2 inches (51mm) and complete the bonding procedures as stated previously.

8. Parapet Wall Covering: Install as shown, extend to full height of parapet; lap under parapet cap flashing and over wall substrate 2 inches minimum on the back side of the wall. Secure in adhesive and attach at 9” on center on the outside face to assure a completely watertight installation.

9. Walkway: Per manufacturer's instructions and as shown on drawings. If drawings do not show walkways a minimum required will be;

   a. A path from the main roof access point to and around all HVAC units, to and around all serviceable roof top equipment, to and around all roof hatches, to and around all access points as designated by the owner, and as needed for protection of the roofing system will have walkway installed.

   b. All support blocking will have walkway pad installed as a protection mat.

C. Fasteners:

1. General: Per manufacturer's recommendation; fastening length and pattern based on performance values supplied by the fastener/disc manufacturer and conforming to Factory Mutual I-90 fastening pattern.

2. Walkway Fastening: Provide 2 inch continuous heat weld strip around perimeter of membrane. A 3” opening is to be left non-welded at the lower side of the walkway pad to allow drainage and venting.

D. Hot Air Welding

1. All field seams exceeding 10 feet in length shall be welded with an approved automatic welder.

2. All field seams must be clean and dry prior to initiating any field welding.

3. Remove foreign materials from the seams (dirt, oils, etc.) with Acetone or authorized alternative. Use CLEAN WHITE COTTON cloths and allow approximately five minutes for solvents to dissipate before initiating the automatic welder. Do not use denim or synthetic rags for cleaning.

4. All welding shall be performed only by qualified personnel to ensure the quality and continuity of the weld.

5. Contaminated areas within a seam will inhibit proper welding and will require a membrane patch or replacement of the membrane.

E. Hand Welding

1. The lap or seam area of the membrane should be intermittently tack welded to hold the membrane in place.

2. The back "interior" edge of the membrane shall be welded first, with a thin, continuous weld to concentrate heat along the exterior edge of the lap during the final welding pass.

3. The nozzle of the hand held hot air welder shall be inserted into the lap at a 45° angle to the lap. Once the polymer on the material begins to flow, a hand roller shall be use to apply pressure at a right angle to the tip of the hand welder. Properly welded seams shall utilize a 1-1/2 inch wide nozzle, to create a homogeneous weld, a minimum of 1-1/2 inches in width.

4. Smaller nozzles may be used for corners, and other field detailing, maintaining a minimum 1 inch weld.

F. Automatic Machine Welding

1. Follow all manufacturers' instructions for the safe operation of the automatic welder.

2. Follow local code requirements for electric supply, grounding and surge protection.

3. The use of a dedicated, portable generator is highly recommended to ensure a consistent electrical supply, without fluctuations that can interfere with weld consistency.

4. Properly welded seams shall utilize a 1-1/2 inch wide nozzle, to create a homogeneous weld, a minimum of 1-1/2 inches in width.

G. Inspection

1. The job foreman and/or supervisor shall initiate daily inspections of all completed work which shall include, but is not limited to the probing of all field welding with a dull pointed instrument to assure the quality of the application and ensure that any equipment or operator deficiencies are immediately resolved.

2. Ensure that all aspects of the installation (sheet layout, attachment, welding, flashing details, etc.) are in strict accordance with the most current Solar Bright Roofing Systems Specifications and Details.

3. Excessive patching of field seams because of inexperienced or poor workmanship will not be accepted at time of final inspection for warranty acceptance.

H. Metal Flashings:

1. General: Fabricate and install per Section 07601 - FLASHING AND SHEET METAL, as shown and per manufacturer's recommendations. Install PVC coated metal flashing at intersections of roofs with sloped or vertical surfaces, roof interruptions and penetrations.

2. Base Flashing: Extend up vertical surfaces 6 inches, minimum, and onto the horizontal roof surfaces not less than 3 inches, unless otherwise noted. Provide PVC coated metal flashing with 2 inches minimum overlap of roofing membrane; heat weld in the horizontal plane, with subsequent sealing of seams with sealant.

3. All perimeter edge details are to be fabricated from Garland/VPG SolarBright Clad Metal and required to have 22 gauge cleat.

4. Ensure all fascia extend a minimum of 2 inch lower than the bottom of the wood nailers.

5. Fasten all metal flashing to wood nailers or approved substrate with approved fasteners eight (8") inches on center.

6. Manufacture and install Solar Bright Clad metal in accordance with approved details, ensuring proper attachment, maintaining 1/2 inch expansion joints and the installation of a minimum 2 inch bond breaker tape prior to sealing the joint.

7. Solidly weld Solar Bright Clad expansion joints with a 6 inch strip of Solar Bright membrane welded to the Solar Bright Clad, covering the bond breaker tape (cover plates are optional).

I. Roof Drains

1. Flash all roof drains in accordance with Solar Bright roof drain details.

2. Replace all worn or broken parts that may cut the Solar Bright membrane or prevent a watertight seal. This includes the clamping ring and strainer basket.

3. Replace all drain bolts or clamps used to hold the drain compression ring to the drain bowl.

4. Solar Bright non-reinforced 60 mil membrane shall be used for flashing the drain assembly. Drain assemblies and basins or "sumps" must be free of any asphalt or coal tar pitch residue prior to installation.

5. The drain target sheet should be sized and installed to provide for a minimum of 12 inch of exposed 60 mil on all sides of the drain.

3.4. FIELD QUALITY CONTROL

A. Perform field inspection and testing as required under provisions of Division 01 Section Quality Requirements & manufacturers recommendations.

B. Heat weld test cuts will be required. One (1) test cut per 5,000 square feet will be required.

C. Correct defects or irregularities discovered during field inspection.

D. Require attendance of roofing materials manufacturers' representatives at site during installation of the roofing system a minimum of two (2) days per week. A copy of the specification should also be on site at all times.

3.5. CLEANING

A. Keep premises free from accumulation of waste and debris. At completion of installation remove surplus materials and debris.

B. At completion clean exposed surfaces in a manner that will not damage finish.

3.6. FINAL INSPECTION

A. At completion of roofing installation and associated work, meet with Contractor, Architect, installer, installer of associated work, Owner, roofing system manufacturer's representative, and other representatives directly concerned with performance of roofing system.

B. Walk roof surface areas of the building, inspect perimeter building edges as well as flashing of roof penetrations, walls, curbs and other equipment. List all items requiring correction or completion and furnish copy of list to each party in attendance.

C. The roofing system manufacturer reserves the right to request a thermographic scan of the roof during final inspection to determine if any damp or wet materials have been installed. The thermographic scan shall be provided by the Roofing Contractor.

D. If core cuts verify the presence of damp or wet materials, the Roofing Contractor shall be required to replace the damaged areas at his own expense.

E. Repair or replace deteriorated or defective work found at time above inspection as required to a produce an installation which is free of damage and deterioration at time of Substantial Completion and according to warranty requirements

F. Notify the Contractor, Architect, & Owner upon completion of corrections.

G. Following the final inspection, provide written notice of acceptance of the installation from the roofing system manufacturer.

3.7. FIELD QUALITY CONTROL

A. Inspection: Provide manufacturer's field observations at start-up and two (2) days per week through project completion. Provide a final inspection upon completion of the Work.
   1. Warranty shall be issued upon manufacturer's acceptance of the installation.
   2. Field observations shall be performed by a representative employed full-time by the manufacturer and whose primary job description is to assist, inspect and approve membrane installations for the manufacturer.
   3. Provide observation reports from the representative indicating procedures followed, weather conditions and any discrepancies found during inspection.
   4. Provide a final report from the representative, certifying that the roofing system has been satisfactorily installed according to the project specifications, approved details and good general roofing practice.

3.8 ROOFING INSTALLER'S WARRANTY

A. WHEREAS _____ of _____, herein called the "Roofing Installer," has performed roofing and associated work ("work") on the following project:
   1. Owner: _____.
   2. Address: _____.
   3. Building Name/Type: _____.
   4. Address: _____.
   5. Area of Work: _____.
   6. Acceptance Date: _____.
   7. Warranty Period: **Five Years**.
   8. Expiration Date: _____.

B. AND WHEREAS Roofing Installer has contracted (either directly with Owner or indirectly as a subcontractor) to warrant said work against leaks and faulty or defective materials and workmanship for designated Warranty Period,

C. NOW THEREFORE Roofing Installer hereby warrants, subject to terms and conditions herein set forth, that during Warranty Period he will, at his own cost and expense, make or cause to be made such repairs to or replacements of said work as are necessary to correct faulty and defective work and as are necessary to maintain said work in a watertight condition.

D. This Warranty is made subject to the following terms and conditions:
   1. Specifically excluded from this Warranty are damages to work and other parts of the building, and to building contents, caused by:
      a. lightning;
      b. peak gust wind speed exceeding **100 MPH**;
      c. fire;

d. failure of roofing system substrate, including cracking, settlement, excessive deflection, deterioration, and decomposition;
e. faulty construction of parapet walls, copings, chimneys, skylights, vents, equipment supports, and other edge conditions and penetrations of the work;
f. vapor condensation on bottom of roofing; and
g. activity on roofing by others, including construction contractors, maintenance personnel, other persons, and animals, whether authorized or unauthorized by Owner.

2. When work has been damaged by any of foregoing causes, Warranty shall be null and void until such damage has been repaired by Roofing Installer and until cost and expense thereof have been paid by Owner or by another responsible party so designated.
3. Roofing Installer is responsible for damage to work covered by this Warranty but is not liable for consequential damages to building or building contents resulting from leaks or faults or defects of work.
4. During Warranty Period, if Owner allows alteration of work by anyone other than Roofing Installer, including cutting, patching, and maintenance in connection with penetrations, attachment of other work, and positioning of anything on roof, this Warranty shall become null and void on date of said alterations, but only to the extent said alterations affect work covered by this Warranty. If Owner engages Roofing Installer to perform said alterations, Warranty shall not become null and void unless Roofing Installer, before starting said work, shall have notified Owner in writing, showing reasonable cause for claim, that said alterations would likely damage or deteriorate work, thereby reasonably justifying a limitation or termination of this Warranty.
5. During Warranty Period, if original use of roof is changed and it becomes used for, but was not originally specified for, a promenade, work deck, spray-cooled surface, flooded basin, or other use or service more severe than originally specified, this Warranty shall become null and void on date of said change, but only to the extent said change affects work covered by this Warranty.
6. Owner shall promptly notify Roofing Installer of observed, known, or suspected leaks, defects, or deterioration and shall afford reasonable opportunity for Roofing Installer to inspect work and to examine evidence of such leaks, defects, or deterioration.
7. This Warranty is recognized to be the only warranty of Roofing Installer on said work and shall not operate to restrict or cut off Owner from other remedies and resources lawfully available to Owner in cases of roofing failure. Specifically, this Warranty shall not operate to relieve Roofing Installer of responsibility for performance of original work according to requirements of the Contract Documents, regardless of whether Contract was a contract directly with Owner or a subcontract with Owner's General Contractor.

E. IN WITNESS THEREOF, this instrument has been duly executed this _____ day of _____, _____.

1. Authorized Signature: _____.
2. Name: _____.
3. Title: _____.

END SECTION 07 54 20

SECTION 07 56 40
FLUID APPLIED ROOFING RESTORATION (METAL)

1.GENERAL

1.1. SECTION INCLUDES

A. Includes all labor, materials, and equipment to install an acrylic restoration coating over the properly prepared substrate.

B. See section 011100 Summary of Work for a detailed scope of work.

1.2. RELATED SECTIONS

A. Section 01110 – Summary of Work

1.3. REFERENCES

A. ASTM C 920 - Standard Specification for Elastomeric Joint Sealants.

B. ASTM C 1250 - Standard Test Method for Nonvolatile Content of Cold Liquid-Applied Elastomeric Waterproofing Membranes.

C. ASTM D 1863 - Standard Specification for Mineral Aggregate Used on Built-Up Roofs.

D. ASTM D 4479 - Standard Specification for Asphalt Roof Coatings - Asbestos-Free.

E. ASTM E 1980 - Standard Practice for Calculating Solar Reflectance Index of Horizontal and Low-Sloped Opaque Surfaces

F. ASTM G 21 - Standard Practice for Determining Resistance of Synthetic Polymeric Materials to Fungi.

G. SRI - Solar Reflectance Index calculated according to ASTM E 1980.

H. South Coast AQMD Standards.

I. SMACNA Architectural Sheet Metal Manual.

J. ANSI/SPRI ES-1 - Testing and Certification Listing of Shop Fabricated Edge Metal

K. National Roofing Contractors Association (NRCA) - Roofing and Waterproofing Manual.

1.4. SYSTEM DESCRIPTION

A. Mineral Surface Roof Restoration: Renovation work includes:
   1. Surface preparation: Pressure wash the existing surface remove dirt, and debris.
   2. Parapets and Vertical Surfaces: Repair as needed, prime, three course with mastic & mesh all laps, corners & transitions. Install white roofing granules into fresh mastic.
   3. Metal Flashings: Repair/Replace metal flashings, pitch pockets, etc.
   4. Roof Repairs: Repair blisters, stressed or cracked membrane. Cut back, patch with primer/ mastic/membrane.

5. Primer: Prime entire roof surface.
6. Coating: Install white acrylic coating over the entire roof surface.

1.5. SUBMITTALS

A. Submit under provisions of Section 013000.

B. Product Data: Manufacturer's data sheets on each product to be used, including:
1. Preparation instructions and recommendations.
2. Storage and handling requirements and recommendations.
3. Installation methods.

C. Shop Drawings: Submit shop drawings including installation details of roofing, flashing, fastening, insulation and vapor barrier, including notation of roof slopes and fastening patterns of insulation and base modified bitumen membrane, prior to job start.

D. LEED Submittals: Provide documentation of how the requirements of Credit will be met:
1. List of proposed materials with recycled content. Indicate post-consumer recycled content and pre-consumer recycled content for each product having recycled content.
2. Product data and certification letter indicating percentages by weight of post-consumer and pre-consumer recycled content for products having recycled content.
3. Product reflectivity and emissivity criteria to qualify for one point under the LEED credit category, Credit 7.2, Landscape & Exterior Design to Reduce Heat Island - Roof.

E. Verification Samples: For each product specified, two samples, minimum size 6 inches (150 mm) square, representing actual product, and color.

F. Manufacturer's Certificates: Certify products meet or exceed specified requirements.

G. Provide written certification from the roofing system manufacturer certifying the applicator is currently authorized to install the specified roof system and ability to provide the specified warranty.

H. Sample Warranty: Provide an unexecuted copy of the warranty specified for this project clearly stating the terms required of the owner, contractor, and manufacturer.

I. Closeout Submittals: Provide manufacturer's maintenance instructions that include recommendations for periodic inspection and maintenance of all completed roofing work. Provide product warranty executed by the manufacturer. Assist Owner in preparation and submittal of roof installation acceptance certification as may be necessary in connection with fire and extended coverage insurance on roofing and associated work.

1.6. QUALITY ASSURANCE

A. Perform Work in accordance with NRCA Roofing and Waterproofing Manual.

B. Manufacturer Qualifications: Manufacturer: Company specializing in manufacturing products specified in this section with documented ISO 9001 certification and minimum twelve years and experience.

C. Installer Qualifications: Company specializing in performing Work of this section with minimum five years documented experience and a certified Pre-Approved Garland Contractor.

D. Installer's Field Supervision: Maintain a full-time Supervisor/Foreman on job site during all phases of

roofing work while roofing work is in progress.

E. Product Certification: Provide manufacturer's certification that materials are manufactured in the United States and conform to requirements specified herein, are chemically and physically compatible with each other, and are suitable for inclusion within the total roof system specified herein.

F. Source Limitations: Obtain all components of roof system from a single manufacturer. Secondary products that are required shall be recommended and approved in writing by the roofing system Manufacturer. Upon request of the Architect or Owner, submit Manufacturer's written approval of secondary components in list form, signed by an authorized agent of the Manufacturer.

1.7. PRE-INSTALLATION CONFERENCE

A. Convene a pre-roofing conference approximately two weeks before scheduled commencement of roofing system installation and associated work.

B. Require attendance of installers of deck or substrate construction to receive roofing, installers of rooftop units and other work in and around roofing which must precede or follow roofing work including mechanical work, Architect, Owner, roofing system manufacturer's representative.

C. Objectives include:
1. Review foreseeable methods and procedures related to roofing work, including set up and mobilization areas for stored material and work area.
2. Tour representative areas of roofing substrates, inspect and discuss condition of substrate, roof drains, curbs, penetrations and other preparatory work.
3. Review structural loading limitations of deck and inspect deck for loss of flatness and for required attachment.
4. Review roofing system requirements, Drawings, Specifications and other Contract Documents.
5. Review and finalize schedule related to roofing work and verify availability of materials, installer's personnel, equipment and facilities needed to make progress and avoid delays.
6. Review required inspection, testing, certifying procedures.
7. Review weather and forecasted weather conditions and procedures for coping with unfavorable conditions, including possibility of temporary roofing.
8. Record conference including decisions and agreements reached. Furnish a copy of records to each party attending.

1.8. DELIVERY, STORAGE, AND HANDLING

A. Deliver and store products in manufacturer's unopened packaging with labels intact until ready for installation.

B. Store all roofing materials in a dry place, on pallets or raised platforms, out of direct exposure to the elements until time of application. Store materials at least 4 inches above ground level and covered with "breathable" tarpaulins.

C. Stored in accordance with the instructions of the manufacturer prior to their application or installation. Store roll goods on end on a clean flat surface. No wet or damaged materials will be used in the application.

D. Store at room temperature wherever possible, until immediately prior to installing the roll. During winter, store materials in a heated location with a 50 degree F (10 degree C) minimum temperature,

removed only as needed for immediate use. Keep materials away from open flame or welding sparks.

E. Avoid stockpiling of materials on roofs without first obtaining acceptance from the Architect/ Engineer.

F. Adhesive storage shall be between the range of above 50 degree F (10 degree C) and below 80 degree F (27 degree C). Area of storage shall be constructed for flammable storage.

1.9. PROJECT CONDITIONS

A. Maintain environmental conditions (temperature, humidity, and ventilation) within limits recommended by manufacturer for optimum results. Do not install products under environmental conditions outside manufacturer's absolute limits.

B. Weather Condition Limitations: Do not apply roofing system during inclement weather or when a 40 percent chance of precipitation or greater is expected.

C. Proceed with roofing work only when existing and forecasted weather conditions will permit unit of work to be installed in accordance with manufacturer's recommendations and warranty requirements.

D. Do not expose materials vulnerable to water or sun damage in quantities greater than can be weatherproofed during same day.

E. When applying materials with spray equipment, take precautions to prevent over spray and/or solvents from damaging or defacing surrounding walls, building surfaces, vehicles or other property. Care should be taken to do the following:
   1. Close air intakes into the building.
   2. Have a dry chemical fire extinguisher available at the jobsite.
   3. Post and enforce "No Smoking" signs.

F. Avoid inhaling spray mist; take precautions to ensure adequate ventilation.

G. Protect completed roof sections from foot traffic for a period of at least 48 hours at 75 degrees F (24 degrees C) and 50 percent relative humidity or until fully cured.

H. Take precautions to ensure that materials do not freeze.

I. Minimum temperature for application is 40 degrees F (4 degrees C) and rising for solvent based materials and 50 degrees F (10 degrees C) and rising for water based.

1.10. WARRANTY

A. Upon completion of the work, provide the Manufacturer's Warranty.
   1. Warranty Period:
      a. 5 years from date of acceptance.

B. Installer is to guarantee all work against defects in materials and workmanship for a period indicated following final acceptance of the Work.
   1. Warranty Period:
      a. 3 years from date of acceptance.

2.PRODUCTS

2.1. MANUFACTURERS

A. Acceptable Manufacturer or equal: Garland Company, Inc. (The), which is located at: 3800 E. 91st St.; Cleveland, OH 44105; Local Representative: Richard Jones: (559) 647-1196 rjones@garlandind.com Web Site:www.garlandco.com

B. The Products specified are intended and the Standard of Quality for the products required for this project. If other products are proposed the bidder must disclose in the bid the manufacturer and the products that they intend to use on the Project. If no manufacturer and products are listed, the bid may be accepted only with the use of products specified.
   1. Bidder will not be allowed to change materials after the bid opening date.
   2. If alternate products are included in the bid, the products must be submitted a minimum of seven (7) days prior to the bid date for review and be equal to or exceed the products specified. Supporting technical data shall be submitted to the Architect/ Owner for approval prior to acceptance.
   3. In making a request for substitution, the Bidder/Roofing Contractor represents that it has:
      a. Personally investigated the proposed product or method, and determined that it is equal or superior in all respects to that specified.
      b. Will provide the same guarantee for substitution as for the product and method specified.
      c. Will coordinate installation of accepted substitution in work, making such changes as may be required for work to be completed in all respects.
      d. Will waive all claims for additional cost related to substitution, which consequently become apparent.
      e. Cost data is complete and includes all related cost under his/her contract or other contracts, which may be affected by the substitution.
      f. Will reimburse the Owner for all redesign cost by the Architect for accommodation of the substitution.
   4. Architect/ Owner reserves the right to be the final authority on the acceptance or rejection of any or all bids, proposed alternate roofing systems or materials that has met ALL specified requirement criteria.
   5. Failure to submit substitution package, or any portion thereof requested, will result in immediate disqualification and consideration for that particular contractors request for manufacturer substitution.

2.2. ROOF RESTORATION SYSTEM MINERAL SURFACE ROOFS

A. Primer: Install primer at a rate of ½ gallon per 100 square feet at all roof areas.
   1. Metal Primer

B. Coating Base Coat: Install at a rate of 1 gallon per 100 square feet.
   1. Coating: Pyramic Plus Lo

C. Coating Top Coat. Install at a rate of 1 gallon per 100 square feet.
   1. Coating: Pyramic Plus Lo

D. Reinforcement: Install UniBond tape treatment at all penetrations, fasteners, mod lines, copings, and wall flashing laps.
   1. UniBond ST Self Adhesive Tape

2.3. ACCESSORIES:

A. Nails and Fasteners: Non-ferrous metal or galvanized steel, except that hard copper nails shall be used with copper; aluminum or stainless steel nails shall be used with aluminum; and stainless steel nails shall be used with stainless steel, Fasteners shall be self-clinching type of penetrating type as recommended by the deck manufacturer. Fasten nails and fasteners flush-driven through flat metal discs not less than 1 inch (25 mm) diameter. Omit metal discs when one-piece composite nails or fasteners with heads not less than 1 inch (25 mm) diameter are used.

B. Urethane Sealant - Tuff-Stuff: One part, non-sag sealant as approved and furnished by the membrane manufacturer for moving joints.
1. Tensile Strength, ASTM D 412: 250 psi
2. Elongation, ASTM D 412: 950%
3. Hardness, Shore A ASTM C 920: 35
4. Adhesion-in-Peel, ASTM C 92: 30 pli

C. Pitch Pocket Sealer - Seal-Tite: Two part, 100% solids, self-leveling, polyurethane sealant for filling pitch pans as recommended and furnished by the membrane manufacturer.
1. Durometer, ASTM D 2240: 40-50 Shore
2. Elongation, ASTM D 412: 250%
3. Tensile Strength, ASTM D 412: 200 @ 100 mil

2.4. EDGE TREATMENT AND ROOF PENETRATION FLASHINGS

A. Flashing Boot - Rubbertite Flashing Boot: Neoprene pipe boot for sealing single or multiple pipe penetrations adhered in approved adhesives as recommended and furnished by the membrane manufacturer.

B. Vents and Breathers: Heavy gauge aluminum and fully insulated vent that allows moisture and air to escape but not enter the roof system as recommended and furnished by the membrane manufacturer.

C. Pitch pans, Rain Collar 24 gauge stainless or 20oz (567gram) copper. All joints should be welded/ soldered watertight. See details for design.

D. Drain Flashings should be 4lb (1.8kg) sheet lead formed and rolled.

E. Plumbing stacks should be 4lb (1.8kg) sheet lead formed and rolled.

F. Liquid Flashing - Tuff-Flash: An asphaltic-polyurethane, low odor, liquid flashing material designed for specialized details unable to be waterproofed with typical modified membrane flashings.
1. Tensile Strength, ASTM D 412: 400 psi
2. Elongation, ASTM D 412: 300%
3. Density @77 degrees F 8.5 lb/gal typical

G. Fabricated Flashings: Fabricated flashings and trim are specified in Section 07620.
1. Fabricated flashings and trim shall conform to the detail requirements of SMACNA "Architectural Sheet Metal Manual" and/or the CDA Copper Development Association "Copper in Architecture - Handbook" as applicable.

H. Manufactured Roof Specialties: Manufactured copings, fascia, gravel stops, control joints, expansion joints, joint covers and related flashings and trim are specified in Section 07710.

1. Manufactured roof specialties shall conform to the detail requirements of SMACNA "Architectural Sheet Metal Manual" and/or the NRCA "Roofing and Waterproofing Manual" as applicable.

3.EXECUTION

3.1. EXAMINATION

A. Do not begin installation until substrates have been properly prepared.

B. Verify that work penetrating the roof deck, or which may otherwise affect the roofing, has been properly completed.

C. If substrate preparation is the responsibility of another installer, notify Architect of unsatisfactory preparation before proceeding.

3.2. ROOF PREPARATION AND REPAIR

A. General:
1. Repair existing roof flashings at curbs and parapet walls
2. Remove all wet, deteriorated, blistered or delaminated roofing membrane or insulation and fill in any low spots occurring as a result of removal work to create a smooth, even surface for application of new roof membranes.
3. Install new wood nailers as necessary to accommodate insulation/recovery board or new nailing patterns.
4. Existing roof surfaces shall be primed as necessary and allowed to dry prior to installing the roofing system.

B. Prepare surfaces using the methods recommended by the manufacturer for achieving the best result for the substrate under the project conditions.

C. Repair all defects such as deteriorated roof decks; replace saturated insulation board, replace loose or brittle membrane or membrane flashings. Verify that exiting conditions meet the following requirements:
1. Existing membrane is either fully adhered or that the membranes mechanical fasteners are secured and functional.
2. Application of roofing materials over a brittle roof membrane is not recommended.

D. Remove all loose dirt and foreign debris from the roof surface. Do not damage roof membrane in cleaning process.

E. Clean and seal all parapet walls, gutters and coping caps, and repair any damaged metal where necessary. Seal watertight all fasteners, pipes, drains, vents, joints and penetrations where water could enter the building envelope.

F. Clean the entire roof surface by removing all dirt, algae, paint, oil, talc, rust or foreign substance. Use a 10 percent solution of TSP (tri-sodium phosphate), Simple Green and warm water. Scrub heavily soiled areas with a brush. Rinse with fresh water to remove all TSP solution. Allow roof to dry thoroughly before continuing.

G. Repair existing roof membrane as necessary to provide a sound substrate for the liquid membrane. All surface defects (cracks, blisters, tears) must be repaired with similar materials.

3.3. INSTALLATION

A. General Installation Requirements:
1. Install in accordance with manufacturer's instructions. Apply to minimum coating thickness required by the manufacturer.
2. Cooperate with manufacturer, inspection and test agencies engaged or required to perform services in connection with installing the roof system.
3. Insurance/Code Compliance: Where required by code, install and test the roofing system to comply with governing regulation and specified insurance requirements.
4. Protect work from spillage of roofing materials and prevent materials from entering or clogging drains and conductors. Replace or restore work damaged by installation of the roofing system.
5. All primers must be top coated within 24 hours of application. Re-prime If more time passes after priming.
6. Keep roofing materials dry during application. Phased construction can be allowed as long as no, more than 7 days pass between coats excluding primers.
7. Coordinate counter flashing, cap flashings, expansion joints and similar work with work specified in other Sections under Related Work.
8. Coordinate roof accessories and miscellaneous sheet metal accessory items, including piping vents and other devices with work specified in other Sections under Related Work.

B. Metal Surface Roof Restoration: Renovation work includes:
1. Surface preparation: Pressure wash the existing surface remove dirt, and debris.
2. Roof Repairs: Repair blisters, stressed or cracked metal.
3. Primer: Prime with Metal Primer.
4. Coating: Install Pyramic white acrylic coating over the entire roof surface at a rate of 1 gallon per 100 sq ft base coat and 1 gallon per 100 sq ft top coat.
   a. Apply Pyramic Acrylic Coating in a uniform manner.
   b. Use special attention to coating flashings and other critical areas to build adequate membrane thickness.
   c. Use multiple coats on verticals to prevent sagging.
   d. Apply at 2.0 gallons per 100 sq ft. over the entire roof surface in two coats.

3.4. INSTALLATION EDGE TREATMENT AND ROOF PENETRATION FLASHING

A. Fabricated Flashings: Fabricated flashings and trim are provided as specified in Section 07620.
1. Fabricated flashings and trim shall conform to the detail requirements of SMACNA "Architectural Sheet Metal Manual" and/or the Copper Development Association "Copper in Architecture - Handbook" as applicable.

B. Manufactured Roof Specialties: Manufactured copings, fascia, gravel stops, control joints, expansion joints, joint covers and related flashings and trim are provided as specified in Section 07710.
1. Manufactured roof specialties shall conform to the detail requirements of SMACNA "Architectural Sheet Metal Manual" and/or the National Roofing Contractor's Association "Roofing and Waterproofing Manual" as applicable.

C. Metal Edge:
1. Inspect the nailers to assure proper attachment and configuration.
2. Run one ply over the edge. Assure coverage of all wood nailers. Fasten plies with ring shank

nails at 8 inches (203 mm) o.c.

3. Install continuous cleat and fasten at 6 inches (152 mm) o.c.
4. Install new metal edge hooked to continuous cleat and set in bed of roof cement. Fasten flange to wood nailers every 3 inches (76 mm) o.c. staggered.
5. Prime metal edge at a rate of 100 square feet per gallon and allow to dry.
6. Strip in flange with base flashing ply covering entire flange in bitumen with 6 inches (152 mm) on to the field of roof. Assure ply laps do not coincide with metal laps.
7. Install a second ply of modified flashing ply in bitumen over the base flashing ply, 9 inches (228 mm) on to the field of the roof. Seal outside edge with rubberized cement.

D. Coping Cap:

1. Minimum flashing height is 8 inches (203 mm) above finished roof height. Maximum flashing height is 24 inches (609 mm). Prime vertical wall at a rate of 100 square feet per gallon and allow to dry.
2. Set cant in bitumen. Run all field plies over cant a minimum of 2 inches (50 mm).
3. Install base flashing ply covering entire wall and wrapped over top of wall and down face with 6 inches (152 mm) on to field of the roof and set in cold asphalt. Nail membrane at 8 inches (203 mm) o.c.
4. Install a second ply of modified flashing ply in bitumen over the base flashing ply, 9 inches (228 mm) on to the field of the roof. Apply a three-course application of mastic and mesh at all seams and allow to cure and install white roofing granules into the fresh mastic.
5. Install coping cap per manufacturer's recommendations.

E. Surface Mounted Counterflashing:

1. Minimum flashing height is 8 inches (203 mm) above finished roof height. Maximum flashing height is 24 inches (609 mm). Prime vertical wall at a rate of 100 square feet per gallon and allow to dry.
2. Set cant in bitumen. Run all field plies over cant a minimum of 2 inches (50 mm).
3. Install base flashing ply covering wall set in bitumen with 6 inches (152 mm) on to field of the roof.
4. Install a second ply of modified flashing ply in bitumen over the base flashing ply, 9 inches (228 mm) on to the field of the roof. Apply a three-course application of mastic and mesh at all vertical seams and allow to cure and install white roofing granules into the fresh mastic.
5. Apply butyl tape to wall behind flashing. Secure termination bar through flashing, butyl tape and into wall. Alternatively use caulk to replace the butyl tape.
6. Secure counterflashing set on butyl tape above flashing at 8 inches (203 mm) o.c. and caulk top of counterflashing.

F. Curb Detail/Air Handling Station:

1. Minimum curb height is 8 inches (203 mm) above finished roof height. Prime vertical at a rate of 100 square feet per gallon and allow to dry.
2. Set cant in bitumen. Run all field plies over cant a minimum of 2 inches (50 mm).
3. Install base flashing ply covering curb set in bitumen with 6 inches (152 mm) on to field of the roof.
4. Install a second ply of modified flashing ply in bitumen over the base flashing ply, 9 inches (228 mm) on to the field of the roof. Apply a three-course application of mastic and mesh at all vertical seams and allow to cure and install white roofing granules into the fresh mastic.
5. Install pre-manufactured counterflashing with fasteners and neoprene washers or per manufacturer's recommendations.
6. Set equipment on neoprene pad and fasten as required by equipment manufacturer.

G. Roof Drain:
   1. Plug drain to prevent debris from entering plumbing.
   2. Taper insulation to drain minimum of 24 inches (609 mm) from center of drain.
   3. Install two base flashing plies (40 inch square minimum) in bitumen.
   4. Set lead/copper flashing (30 inch square minimum) in 1/4 inch (6 mm) bed of mastic. Run lead/copper into drain a minimum of 2 inches (50 mm). Prime lead/copper at a rate of 100 square feet per gallon and allow to dry.
   5. Run roof system plies over drain. Cut out plies inside drain bowl.
   6. Install modified membrane (48 inch square minimum) in bitumen.
   7. Install clamping ring and assure that all plies are under the clamping ring.
   8. Remove drain plug and install strainer.

H. Plumbing Stack:
   1. Minimum stack height is 12 inches (609 mm).
   2. Run roof system over the entire surface of the roof. Seal the base of the stack with elastomeric sealant.
   3. Prime flange of new sleeve. Install properly sized sleeves set in 1/4 inch (6 mm) bed of roof cement.
   4. Install base flashing ply in bitumen.
   5. Install membrane in bitumen.
   6. Caulk the intersection of the membrane with elastomeric sealant.
   7. Turn sleeve a minimum of 1 inch (25 mm) down inside of stack.

3.5. CLEANING

A. Clean-up and remove daily from the site all wrappings, empty containers, paper, loose particles and other debris resulting from these operations.

B. Remove asphalt markings from finished surfaces.

C. Repair or replace defaced or disfigured finishes caused by Work of this section.

3.6. PROTECTION

A. Provide traffic ways, erect barriers, fences, guards, rails, enclosures, chutes and the like to protect personnel, roofs and structures, vehicles and utilities.

B. Protect exposed surfaces of finished walls with tarps to prevent damage.

C. Plywood for traffic ways required for material movement over existing roofs shall be not less than 5/8 inch (16 mm) thick.

D. In addition to the plywood listed above, an underlayment of minimum 1/2 inch (13 mm) recover board is required on new roofing.

E. Special permission shall be obtained from the Manufacturer before any traffic shall be permitted over new roofing.

3.7. FIELD QUALITY CONTROL

A. Require attendance of roofing materials manufacturers' representatives at site during installation of the roofing system a minimum of two (2) days per week.

B. Perform field inspection as required under provisions of manufacturers requirements.

C. Correct defects or irregularities discovered during field inspection.

3.8. FINAL INSPECTION

A. At completion of roofing installation and associated work, meet with Contractor, Architect, installer, installer of associated work, roofing system manufacturer's representative and others directly concerned with performance of roofing system.

B. Walk roof surface areas, inspect perimeter building edges as well as flashing of roof penetrations, walls, curbs and other equipment. Identify all items requiring correction or completion and furnish copy of list to each party in attendance.

C. If core cuts verify the presence of damp or wet materials, the installer shall be required to replace the damaged areas at his own expense.

D. Repair or replace deteriorated or defective work found at time above inspection as required to a produce an installation that is free of damage and deterioration at time of Substantial Completion and according to warranty requirements.

E. Architect upon completion of corrections.

F. Following the final inspection, provide written notice of acceptance of the installation from the roofing system manufacturer.

3.9. PROTECTION

A. Protect installed products until completion of project.

B. Touch-up, repair or replace damaged products before Substantial Completion.

3.10. SCHEDULES

A. Coating:
1. Pyramic: White Elastomeric Roof Coating
a. Pyramic Plus Lo Acrylic Roof Coating: White, Non Toxic, Fire Retardant Roof Coating.
1. Non Volatile 63%
2. Density 11.7lb. / gal
3. VOC <50 gal./l
4. Reflectance 0.83
5. Emittance 0.90
6. SRI 104

3.11. ROOFING INSTALLER'S WARRANTY

A. WHEREAS _____ of _____, herein called the "Roofing Installer," has performed roofing and associated work ("work") on the following project:
   1. Owner: _____.
   2. Address: _____.
   3. Building Name/Type: _____.
   4. Address: _____.
   5. Area of Work: _____.
   6. Acceptance Date: _____.
   7. Warranty Period: **Three Years**.
   8. Expiration Date: _____.

B. AND WHEREAS Roofing Installer has contracted (either directly with Owner or indirectly as a subcontractor) to warrant said work against leaks and faulty or defective materials and workmanship for designated Warranty Period,

C. NOW THEREFORE Roofing Installer hereby warrants, subject to terms and conditions herein set forth, that during Warranty Period he will, at his own cost and expense, make or cause to be made such repairs to or replacements of said work as are necessary to correct faulty and defective work and as are necessary to maintain said work in a watertight condition.

D. This Warranty is made subject to the following terms and conditions:
   1. Specifically excluded from this Warranty are damages to work and other parts of the building, and to building contents, caused by:
      a. lightning;
      b. peak gust wind speed exceeding **120 MPH**;
      c. fire;
      d. failure of roofing system substrate, including cracking, settlement, excessive deflection, deterioration, and decomposition;
      e. faulty construction of parapet walls, copings, chimneys, skylights, vents, equipment supports, and other edge conditions and penetrations of the work;
      f. vapor condensation on bottom of roofing; and
      g. activity on roofing by others, including construction contractors, maintenance personnel, other persons, and animals, whether authorized or unauthorized by Owner.
   2. When work has been damaged by any of foregoing causes, Warranty shall be null and void until such damage has been repaired by Roofing Installer and until cost and expense thereof have been paid by Owner or by another responsible party so designated.
   3. Roofing Installer is responsible for damage to work covered by this Warranty but is not liable for consequential damages to building or building contents resulting from leaks or faults or defects of work.
   4. During Warranty Period, if Owner allows alteration of work by anyone other than Roofing Installer, including cutting, patching, and maintenance in connection with penetrations, attachment of other work, and positioning of anything on roof, this Warranty shall become null and void on date of said alterations, but only to the extent said alterations affect work covered by this Warranty. If Owner engages Roofing Installer to perform said alterations, Warranty shall not become null and void unless Roofing Installer, before starting said work, shall have notified Owner in writing, showing reasonable cause for claim, that said alterations would likely damage or deteriorate work, thereby reasonably justifying a limitation or termination of this Warranty.
   5. During Warranty Period, if original use of roof is changed and it becomes used for, but was not originally specified for, a promenade, work deck, spray-cooled surface, flooded basin, or other

use or service more severe than originally specified, this Warranty shall become null and void on date of said change, but only to the extent said change affects work covered by this Warranty.

6. Owner shall promptly notify Roofing Installer of observed, known, or suspected leaks, defects, or deterioration and shall afford reasonable opportunity for Roofing Installer to inspect work and to examine evidence of such leaks, defects, or deterioration.
7. This Warranty is recognized to be the only warranty of Roofing Installer on said work and shall not operate to restrict or cut off Owner from other remedies and resources lawfully available to Owner in cases of roofing failure. Specifically, this Warranty shall not operate to relieve Roofing Installer of responsibility for performance of original work according to requirements of the Contract Documents, regardless of whether Contract was a contract directly with Owner or a subcontract with Owner's General Contractor.

E. IN WITNESS THEREOF, this instrument has been duly executed this _____ day of _____, _____.

1. Authorized Signature: _____.
2. Name: _____.
3. Title: _____.

END OF SECTION

SECTION 07 62 00

ROOF RELATED SHEET METAL FLASHING

1.GENERAL

1. RELATED DOCUMENTS

A. Drawings and general provisions of the Contract, including General and Supplementary Conditions and Division 01 Specification Sections, apply to this Section.

2. SUMMARY

A. Section Includes:

1. Manufactured through-wall flashing with counterflashing
2. Formed low-slope roof sheet metal fabrications.
3. Formed wall, coping, and soffit sheet metal fabrications.
4. Formed equipment support flashing
5. Surface mounted counter flashing
6. Manufactured reglets and counter flashing
7. Edge metal / gravel stop and cleat flashing
8. Gutters & Downspouts

B. Related Requirements:

1. Division 06 "Rough Carpentry" for wood nailers, curbs, and blocking.
2. Division 07 “Membrane Roofing” for materials and installation of sheet metal flashing and trim integral with roofing.
3. Division 07 “Metal Roofing” for materials and installation of sheet metal flashing and trim integral with roofing.
4. Division 07 "Roof Accessories" for set-on-type curbs, equipment supports, roof hatches, vents, and other manufactured roof accessory units.

3. COORDINATION

A. Coordinate sheet metal flashing and trim layout and seams with sizes and locations of penetrations to be flashed, and joints and seams in adjacent materials.

B. Coordinate sheet metal flashing and trim installation with adjoining roofing and wall materials, joints, and seams to provide leak proof, secure, and noncorrosive installation.

4. PREINSTALLATION MEETINGS

A. Pre Installation Conference: Conduct conference at Project site.

1. Review construction schedule. Verify availability of materials, Installer's personnel, equipment, and facilities needed to make progress and avoid delays.
2. Review special roof details, roof drainage, roof-penetration flashing, equipment curbs, and condition of other construction that affect sheet metal flashing and trim.
3. Review requirements for insurance and certificates if applicable.
4. Review sheet metal flashing observation and repair procedures after flashing installation.

5. SUBMITTALS

A. Product Data: For each type of product.

1. Include construction details, material descriptions, dimensions of individual components and profiles, and finishes for each manufactured product and accessory.

B. Shop Drawings: For sheet metal flashing and trim.

1. Include plans, elevations, sections, and attachment details.
2. Detail fabrication and installation layouts, expansion-joint locations, and keyed details. Distinguish between shop- and field-assembled work.
3. Include identification of material, thickness, weight, and finish for each item and location in Project.
4. Include details for forming, including profiles, shapes, seams, and dimensions.
5. Include details for joining, supporting, and securing, including layout and spacing of fasteners, cleats, clips, and other attachments. Include pattern of seams.
6. Include details of termination points and assemblies.
7. Include details of expansion joints and expansion-joint covers, including showing direction of expansion and contraction from fixed points.
8. Include details of roof-penetration flashing.
9. Include details of edge conditions, including eaves, ridges, valleys, rakes, crickets, and counter flashings as applicable.
10. Include details of special conditions.
11. Include details of connections to adjoining work.
12. Detail formed flashing and trim at scale of not less than 3 inches per 12 inches

C. Samples for Initial Selection: For each type of sheet metal and accessory indicated with factory-applied finishes.

D. Samples for Verification: For each type of exposed finish.

1. Sheet Metal Flashing: 12 inches (300 mm) long by actual width of unit, including finished seam and in required profile. Include fasteners, cleats, clips, closures, and other attachments.

2. Trim, Metal Closures, Expansion Joints, Joint Intersections, and Miscellaneous Fabrications: 12 inches (300 mm) long and in required profile. Include fasteners and other exposed accessories.

6. INFORMATIONAL SUBMITTALS

A. Qualification Data: For fabricator.

B. Product Certificates: For each type of coping and roof edge flashing that is ANSI SPRI ES-1 tested.

C. Product Test Reports: For each product, for tests performed by a qualified testing agency.

D. Sample Warranty: For special warranty.

7. CLOSEOUT SUBMITTALS

A. Maintenance Data: For sheet metal flashing and trim, and its accessories, to include in maintenance manuals.

8. QUALITY ASSURANCE

A. Fabricator Qualifications: Employs skilled workers who custom fabricate sheet metal flashing and trim similar to that required for this Project and whose products have a record of successful in-service performance.

1. For copings and roof edge flashings that are SPRI ES-1 tested**,** shop shall be listed as able to fabricate required details as tested and approved.

9. DELIVERY, STORAGE, AND HANDLING

A. Do not store sheet metal flashing and trim materials in contact with other materials that might cause staining, denting, or other surface damage. Store sheet metal flashing and trim materials away from uncured concrete and masonry.

B. Protect strippable protective covering on sheet metal flashing and trim from exposure to sunlight and high humidity, except to extent necessary for period of sheet metal flashing and trim installation.

10. WARRANTY

A. Owner shall receive one (1) 20 Year warranty from manufacturer of roofing materials covering all of the following criteria. Multiple warranties are not acceptable.

1. Pre-finished metal material shall require a written twenty (20)-year non-prorated warranty covering fade, chalking and film integrity. The material shall not show a color change greater than 5 NBS color units per ASTM D2244 or chalking excess of 8 units per ASTM D659. If either occurs material shall be replaced per warranty, at no cost to the Owner.

2. Changes: Changes or alterations in the edge metal system without prior written consent from the manufacturer shall render the system unacceptable for a warranty.

3. Warranty shall commence on date of substantial completion or final payment, whichever is agreed by contract.

4. The Contractor shall provide the Owner with a notarized written warranty assuring that all sheet metal work including caulking and fasteners to be watertight and secure for a period of two years from the date of final acceptance of the building. Warranty shall include all materials and workmanship required to repair any leaks that develop, and make good any damage to other work or equipment caused by such leaks or the repairs thereof.

5. Installing roofing contractor shall be responsible for the installation of the edge metal system in general accordance with the membrane manufacturer's recommendations.

6. Installing contractor shall certify that the edge metal system has been installed per the manufacturer's printed details and specifications.

7. One manufacturer shall provide a 30 Year No Dollar Limit Warranty as a single warranty for all accessory metal for flashings, metal edges and copings, along with the warranty for metal roof areas, membrane roof areas, and any transitions between two different material types.

2.PRODUCTS

1. PERFORMANCE REQUIREMENTS

A. General: Sheet metal flashing and trim assemblies shall withstand wind loads, structural movement, thermally induced movement, and exposure to weather without failure due to defective manufacture, fabrication, installation, or other defects in construction. Completed sheet metal flashing and trim shall not rattle, leak, or loosen, and shall remain watertight.

B. Sheet Metal Standard for Flashing and Trim: Comply with NRCA's "The NRCA Roofing Manual" and SMACNA's "Architectural Sheet Metal Manual" requirements for dimensions and profiles shown unless more stringent requirements are indicated.

C. Sheet Metal Standard for Copper: Comply with CDA's "Copper in Architecture Handbook." Conform to dimensions and profiles shown unless more stringent requirements are indicated.

D. SPRI Wind Design Standard: Manufacture and install roof edge flashings tested according to SPRI ES-1 and capable of resisting the following design pressure:

1. Design Pressure: As indicated on Drawings**.**

E. Thermal Movements: Allow for thermal movements from ambient and surface temperature changes to prevent buckling, opening of joints, overstressing of components, failure of joint sealants, failure of connections, and other detrimental effects. Base calculations on surface temperatures of materials due to both solar heat gain and nighttime-sky heat loss.

1. Temperature Change: 120 deg F (67 deg C)**,** ambient; 180 deg F (100 deg C)**,** material surfaces**.**

2. COPING

A. The design is based upon roofing systems engineered and manufactured by the Garland Company:

The Garland Company, Inc. or equal
Rich Jones
Telephone: 559-647-1196
Email: rjones@garlandco.com

1. General: Product designations for the materials used in this section shall be based on performance characteristics of the R-MER Edge System manufactured by the Garland Company, Cleveland, OH, and shall form the basis of the contract documents.

2. R-Mer Edge Fascia or Extruded Fascia Continuous Cant

a. Zinc-coated steel, ASTM A653, coating designation G-90, in thickness of 0.0299 nom./ 22 gauge, 36" to 48" by coil length, chemically treated, commercial or lock-forming quality.

3. R-Mer Edge Coping Chairs

a. Zinc-coated steel, ASTM A653, coating designation G-90, in thickness of 0.0635 nom./ 16 gauge, 36" to 48" by coil length, chemically treated, commercial or lock-forming quality.

4. R-Mer Edge Fascia/drip edge

a. Zinc-coated steel, ASTM A653, coating designation G-90, in thickness of 22 gauge, 36" to 48" by coil length, chemically treated, commercial or lock-forming quality.

5. R-Mer Edge Coping

a. Zinc-coated steel, ASTM A653, coating designation G-90, in thickness of 22 gauge 36" to 48" by coil length, chemically treated, commercial or lock-forming quality.

3. SHEET METALS

A. General: Protect mechanical and other finishes on exposed surfaces from damage by applying strippable, temporary protective film before shipping.

B. Metallic-Coated Steel Sheet: Provide zinc-coated (galvanized) steel sheet according to ASTM A 653/A 653M, G90 (Z275) coating designation; prepainted by coil-coating process to comply with ASTM A 755/A 755M.

1. Surface: Smooth, flat and with manufacturer's standard clear acrylic coating on both sides**.**
2. Exposed Coil-Coated Finish:
   a. Two-Coat Fluoropolymer: AAMA 621. Fluoropolymer finish containing not less than 70 percent PVDF resin by weight in both color coat and clear topcoat. Prepare, pretreat, and apply coating to exposed metal surfaces to comply with coating and resin manufacturers' written instructions.
3. Color: Match Architect's sample
4. Concealed Finish: Pretreat with manufacturer's standard white or light-colored acrylic or polyester backer finish, consisting of prime coat and wash coat with minimum total dry film thickness of 0.5 mil (0.013 mm).

4. UNDERLAYMENT MATERIALS

A. Self-Adhering, High-Temperature Sheet: Minimum 45 mils thick, consisting of a slip-resistant polyethylene- or polypropylene-film top surface laminated to a layer of butyl- or SBS-modified asphalt adhesive, with release-paper backing; specifically designed to withstand high metal temperatures beneath metal roofing. Provide primer according to written recommendations of underlayment manufacturer.

1. The Garland Company Inc or equal., 3800 E. 91st Street Cleveland OH 44105; R-Mer Seal self-adhering underlayment. Local Representative: Richard Jones (559) 647-1196 rjones@garlandco.com
2. Thermal Stability: ASTM D 1970; stable after testing at 240 deg F or higher.
3. Low-Temperature Flexibility: ASTM D 1970; passes after testing at minus 20 deg F or lower.

B. Slip Sheet: Rosin-sized building paper, 3 lb/100 sq. ft. minimum.

5. MISCELLANEOUS MATERIALS

A. General: Provide materials and types of fasteners, solder, protective coatings, sealants, and other miscellaneous items as required for complete sheet metal flashing and trim installation and as recommended by manufacturer of primary sheet metal unless otherwise indicated.

B. Fasteners: Wood screws, annular threaded nails, self-tapping screws, self-locking rivets and bolts, and other suitable fasteners designed to withstand design loads and recommended by manufacturer of primary sheet metal or manufactured item.

1. General: Blind fasteners or self-drilling screws, gasketed, with hex-washer head.

    a. Exposed Fasteners: Heads matching color of sheet metal using plastic caps or factory-applied coating. Provide metal-backed EPDM or PVC sealing washers under heads of exposed fasteners bearing on weather side of metal.
    b. Blind Fasteners: High-strength aluminum or stainless-steel rivets suitable for metal being fastened.
    c. Spikes and Ferrules: Same material as gutter; with spike with ferrule matching internal gutter width.

2. Fasteners for Zinc-Tin Alloy-Coated Stainless-Steel Sheet: Series 300 stainless steel.

C. Solder:

1. For Zinc-Coated (Galvanized) Steel: ASTM B 32, Grade Sn50, 50 percent tin and 50 percent lead or Grade Sn60, 60 percent tin and 40 percent lead with maximum lead content of 0.2 percent.

D. Sealant Tape: Pressure-sensitive, 100 percent solids, polyisobutylene compound sealant tape with release-paper backing. Provide permanently elastic, nonsag, nontoxic, nonstaining tape 1/2 inch wide and 1/8 inch thick.

E. Elastomeric Sealant: ASTM C 920, elastomeric polyurethane polymer sealant; of type, grade, class, and use classifications required to seal joints in sheet metal flashing and trim and remain watertight.

F. Butyl Sealant: ASTM C 1311, single-component, solvent-release butyl rubber sealant; polyisobutylene plasticized; heavy bodied for hooked-type expansion joints with limited movement.

G. Bituminous Coating: Cold-applied asphalt emulsion according to ASTM D 1187.

H. Asphalt Roofing Cement: ASTM D 4586, asbestos free, of consistency required for application.

6. FABRICATION, GENERAL

A. General: Custom fabricate sheet metal flashing and trim to comply with details shown and recommendations in cited sheet metal standard that apply to design, dimensions, geometry, metal thickness, and other characteristics of item required. Fabricate sheet metal flashing and trim in shop to greatest extent possible.

1. Fabricate sheet metal flashing and trim in thickness or weight needed to comply with performance requirements, but not less than that specified for each application and metal.
2. Obtain field measurements for accurate fit before shop fabrication.
3. Form sheet metal flashing and trim to fit substrates without excessive oil canning, buckling, and tool marks; true to line, levels, and slopes; and with exposed edges folded back to form hems.

4. Conceal fasteners and expansion provisions where possible. Do not use exposed fasteners on faces exposed to view.

B. Fabrication Tolerances: Fabricate sheet metal flashing and trim that is capable of installation to a tolerance of 1/4 inch in 20 feet on slope and location lines indicated on Drawings and within 1/8-inch offset of adjoining faces and of alignment of matching profiles.

C. Expansion Provisions: Form metal for thermal expansion of exposed flashing and trim.

1. Form expansion joints of intermeshing hooked flanges, not less than 1 inch deep, filled with butyl sealant concealed within joints.
2. Use lapped expansion joints only where indicated on Drawings.

D. Sealant Joints: Where movable, non expansion-type joints are required, form metal to provide for proper installation of elastomeric sealant according to cited sheet metal standard.

E. Fabricate cleats and attachment devices from same material as accessory being anchored or from compatible, noncorrosive metal.

F. Seams: Fabricate nonmoving seams with flat-lock seams. Form seams and seal with elastomeric sealant unless otherwise recommended by sealant manufacturer for intended use.

G. Do not use graphite pencils to mark metal surfaces.

7. ROOF-DRAINAGE SHEET METAL FABRICATIONS

A. Hanging Gutters: Fabricate to cross section required, complete with end pieces, outlet tubes, and other accessories as required. Fabricate in minimum 96-inch- long sections. Furnish flat-stock gutter brackets and flat-stock gutter spacers and straps fabricated from same metal as gutters, of size recommended by cited sheet metal standard but with thickness not less than dimension indicated on Drawings. Fabricate expansion joints, expansion-joint covers, gutter bead reinforcing bars, and gutter accessories from same metal as gutters. Shop fabricate interior and exterior corners.

1. Gutter Profile: Style B according to cited sheet metal standard.
2. Expansion Joints: Butt type with cover plate**.**
3. Accessories: Continuous, removable leaf screen with sheet metal frame and hardware cloth screen**.**
4. Gutters with Girth up to 15 Inches: Fabricate from the following materials:
   a. Galvanized Steel: 22 gauge thickness.

B. Downspouts: Fabricate downspouts per plans and details or per size per CA plumbing code. Fabricate from the following materials unless otherwise shown on drawings.
1. Galvanized Steel: 22 gauge thickness.

C. Conductor Heads: Fabricate conductor heads with flanged back and stiffened top edge and of dimensions and shape required, complete with outlet tubes, exterior flange trim, and built-in overflows. Fabricate from the following materials:

1. Galvanized Steel: 22 gauge thickness.

8. WALL SHEET METAL FABRICATIONS

A. Through-Wall Flashing: Fabricate continuous flashings in minimum 96-inch- long, but not exceeding 12-foot long, sections, under copings, and at shelf angles. Fabricate discontinuous lintel, sill, and similar flashings to extend 6 inches beyond each side of wall openings; and form with 2-inch high, end dams. Fabricate from the following materials:

1. Galvanized Steel: 22 gauge thickness.

B. Opening Flashings in Frame Construction: Fabricate head, sill, jamb, and similar flashings to extend **4 inches** beyond wall openings. Form head and sill flashing with 2-inch high, end dams. Fabricate from the following materials:

1. Galvanized Steel: 22 gauge thickness.

C. Wall Expansion-Joint Cover: Fabricate from the following materials:

1. Galvanized Steel: 22 gauge thickness.

9. MISCELLANEOUS SHEET METAL FABRICATIONS

A. Equipment Support Flashing: Fabricate from the following materials:

1. Galvanized Steel: 22 gauge thickness.

B. Overhead-Piping Safety Pans: Fabricate from the following materials:

1. Galvanized Steel: 22 gauge thickness.

3.EXECUTION

1. EXAMINATION

A. Examine substrates, areas, and conditions, with Installer present, for compliance with requirements for installation tolerances, substrate, and other conditions affecting performance of the Work.

1. Verify compliance with requirements for installation tolerances of substrates.
2. Verify that substrate is sound, dry, smooth, clean, sloped for drainage, and securely anchored.
3. Verify that air- or water-resistant barriers have been installed over sheathing or backing substrate to prevent air infiltration or water penetration.

B. Proceed with installation only after unsatisfactory conditions have been corrected.

2. UNDERLAYMENT INSTALLATION

A. Self-Adhering Sheet Underlayment: Install self-adhering sheet underlayment, wrinkle free. Prime substrate if recommended by underlayment manufacturer. Comply with temperature restrictions of underlayment manufacturer for installation; use primer for installing underlayment at low temperatures. Apply in shingle fashion to shed water, with end laps of not less than 6 inches staggered 24 inches between courses. Overlap side edges not less than 3-1/2 inches. Roll laps and edges with roller. Cover underlayment within 14 days.

B. Apply slip sheet, wrinkle free, directly on substrate before installing sheet metal flashing and trim.

3. INSTALLATION, GENERAL

A. General: Anchor sheet metal flashing and trim and other components of the Work securely in place, with provisions for thermal and structural movement. Use fasteners, solder, protective coatings, separators, sealants, and other miscellaneous items as required to complete sheet metal flashing and trim system.

1. Install sheet metal flashing and trim true to line, levels, and slopes. Provide uniform, neat seams with minimum exposure of solder, welds, and sealant.
2. Install sheet metal flashing and trim to fit substrates and to result in watertight performance. Verify shapes and dimensions of surfaces to be covered before fabricating sheet metal.
3. Space cleats not more than 12 inches apart. Attach each cleat with at least two fasteners. Bend tabs over fasteners.
4. Install exposed sheet metal flashing and trim with limited oil canning, and free of buckling and tool marks.
5. Torch cutting of sheet metal flashing and trim is not permitted.
6. Do not use graphite pencils to mark metal surfaces.

B. Metal Protection: Where dissimilar metals contact each other, or where metal contacts pressure-treated wood or other corrosive substrates, protect against galvanic action or corrosion by painting contact surfaces with bituminous coating or by other permanent separation as recommended by sheet metal manufacturer or cited sheet metal standard.

1. Coat concealed side of stainless-steel sheet metal flashing and trim with bituminous coating where flashing and trim contact wood, ferrous metal, or cementitious construction.
2. Underlayment: Where installing sheet metal flashing and trim directly on cementitious or wood substrates, install underlayment and cover with slip sheet.

C. Expansion Provisions: Provide for thermal expansion of exposed flashing and trim. Space movement joints at maximum of **10 feet** with no joints within 24 inches of corner or intersection.

1. Form expansion joints of intermeshing hooked flanges, not less than 1 inch deep, filled with sealant concealed within joints.
2. Use lapped expansion joints only where indicated on Drawings.

D. Fasteners: Use fastener sizes that penetrate wood blocking or sheathing not less than 1-1/4 inches for nails and not less than 3/4 inch for wood screws.

E. Conceal fasteners and expansion provisions where possible in exposed work and locate to minimize possibility of leakage. Cover and seal fasteners and anchors as required for a tight installation.

F. Seal joints as required for watertight construction.

1. Use sealant-filled joints unless otherwise indicated. Embed hooked flanges of joint members not less than 1 inch into sealant. Form joints to completely conceal sealant. When ambient temperature at time of installation is between 40 and 70 deg F, set joint members for 50 percent movement each way. Adjust setting proportionately for installation at higher ambient temperatures. Do not install sealant-type joints at temperatures below 40 deg F.
2. Prepare joints and apply sealants to comply with requirements in Section 079200 "Joint Sealants."

G. Soldered Joints: Clean surfaces to be soldered, removing oils and foreign matter. Pre-tin edges of sheets with solder to width of 1-1/2 inches; however, reduce pre-tinning where pre-tinned surface would show in completed Work.

1. Do not solder metallic-coated steel sheet.
2. Do not pre-tin zinc-tin alloy-coated stainless steel**.**
3. Do not use torches for soldering.
4. Heat surfaces to receive solder, and flow solder into joint. Fill joint completely. Completely remove flux and spatter from exposed surfaces.
5. Stainless-Steel Soldering: Tin edges of uncoated sheets, using solder for stainless steel and acid flux. Promptly remove acid flux residue from metal after tinning and soldering. Comply with solder manufacturer's recommended methods for cleaning and neutralization.
6. Copper Soldering: Tin edges of uncoated sheets, using solder for copper.
7. Copper-Clad Stainless-Steel Soldering: Tin edges of uncoated sheets, using solder for copper-clad stainless steel.

H. Rivets: Rivet joints in zinc where necessary for strength.

4. ROOF-DRAINAGE SYSTEM INSTALLATION

A. General: Install sheet metal roof-drainage items to produce complete roof-drainage system according to cited sheet metal standard unless otherwise indicated. Coordinate installation of roof perimeter flashing with installation of roof-drainage system.

B. Hanging Gutters: Join sections with riveted and soldered joints or joints sealed with sealant as shown and specified on drawings or summary/scope of work. Provide for thermal expansion. Attach gutters at eave or fascia to firmly anchor them in position. Provide end closures and seal watertight with sealant. Slope to downspouts.

1. Fasten gutter spacers to front and back of gutter.

2. Anchor and loosely lock back edge of gutter to continuous cleat, eave or apron flashing.
3. Anchor back of gutter that extends onto roof deck with cleats spaced not more than 24 inches apart.
4. Anchor gutter with gutter brackets and straps spaced not more than 24 inches apart to roof deck, unless otherwise indicated, and loosely lock to front gutter bead.
5. Anchor gutter with spikes and ferrules spaced not more than 24 inches apart.
6. Install gutter with expansion joints at locations indicated, but not exceeding, 50 feet apart. Install expansion-joint caps.
7. Install continuous gutter screens on gutters with noncorrosive fasteners, removable for cleaning gutters.

C. Conductor Heads: Anchor securely to wall, with elevation of conductor head rim at minimum of 1 inch below gutter discharge.

D. Expansion-Joint Covers: Install expansion-joint covers at locations and of configuration indicated. Lap joints minimum of 4 inches in direction of water flow.

5. ROOF FLASHING INSTALLATION

A. General: Install sheet metal flashing and trim to comply with performance requirements**,** sheet metal manufacturer's written installation instructions, and cited sheet metal standard. Provide concealed fasteners where possible, and set units true to line, levels, and slopes. Install work with laps, joints, and seams that are permanently watertight and weather resistant.

B. Roof Edge Flashing: Anchor to resist uplift and outward forces according to recommendations in FM Global Property Loss Prevention Data Sheet 1-49 for FM Approvals' listing for required windstorm classification. All roof edge flashings are to incorporate a minimum 22 gauge continuous cleat.

C. Copings: Anchor to resist uplift and outward forces according to recommendations in cited sheet metal standard unless otherwise indicated.

1. Interlock exterior bottom edge of coping with continuous cleat anchored to substrate at 24-inch centers.
2. Anchor interior leg of coping with washers and screw fasteners through slotted holes at 24-inch centers.

D. Copings: Anchor to resist uplift and outward forces according to recommendations in FM Global Property Loss Prevention Data Sheet 1-49 for specified FM Approvals' listing for required windstorm classification.

E. Pipe or Post Counterflashing: Install counterflashing umbrella with close-fitting collar with top edge flared for elastomeric sealant, extending minimum of 4 inches over base flashing. Install stainless-steel draw band and tighten.

F. Counterflashing: Coordinate installation of counterflashing with installation of base flashing. Insert counterflashing in reglets or receivers and fit tightly to base flashing. Extend counterflashing 4 inches over base flashing. Lap counterflashing joints minimum of 4 inches.

Secure in waterproof manner by means of interlocking folded seam or blind rivets and sealant, anchor and washer at 36-inch centers unless otherwise indicated.

G. Roof-Penetration Flashing: Coordinate installation of roof-penetration flashing with installation of roofing and other items penetrating roof. Seal with elastomeric sealant and clamp flashing to pipes that penetrate roof.

6. WALL FLASHING INSTALLATION

A. General: Install sheet metal wall flashing to intercept and exclude penetrating moisture according to cited sheet metal standard unless otherwise indicated. Coordinate installation of wall flashing with installation of wall-opening components such as windows, doors, and louvers.

B. Through-Wall Flashing: Installation of through-wall flashing is specified in Section 042000 "Unit Masonry."Section092400 "Cement Plastering."

C. Opening Flashings in Frame Construction: Install continuous head, sill, jamb, and similar flashings to extend 4 inches beyond wall openings.

7. MISCELLANEOUS FLASHING INSTALLATION

A. Equipment Support Flashing: Coordinate installation of equipment support flashing with installation of roofing and equipment. Weld or seal flashing with elastomeric sealant to equipment support member.

B. Overhead-Piping Safety Pans: Suspend pans from structure above, independent of other overhead items such as equipment, piping, and conduit, unless otherwise indicated on Drawings. Pipe and install drain line to plumbing waste or drainage system.

8. ERECTION TOLERANCES

A. Installation Tolerances: Shim and align sheet metal flashing and trim within installed tolerance of 1/4 inch in 20 feet on slope and location lines indicated on Drawings and within 1/8-inch offset of adjoining faces and of alignment of matching profiles.

B. Installation Tolerances: Shim and align sheet metal flashing and trim within installed tolerances specified in MCA's "Guide Specification for Residential Metal Roofing."

9. CLEANING AND PROTECTION

A. Clean exposed metal surfaces of substances that interfere with uniform oxidation and weathering.

B. Clean and neutralize flux materials. Clean off excess solder.

C. Clean off excess sealants.

D. Remove temporary protective coverings and strippable films as sheet metal flashing and trim are installed unless otherwise indicated in manufacturer's written installation instructions. On completion of sheet metal flashing and trim installation, remove unused materials and clean finished surfaces as recommended by sheet metal flashing and trim manufacturer. Maintain sheet metal flashing and trim in clean condition during construction.

E. Replace sheet metal flashing and trim that have been damaged or that have deteriorated beyond successful repair by finish touchup or similar minor repair procedures.

END OF SECTION 07 62 00

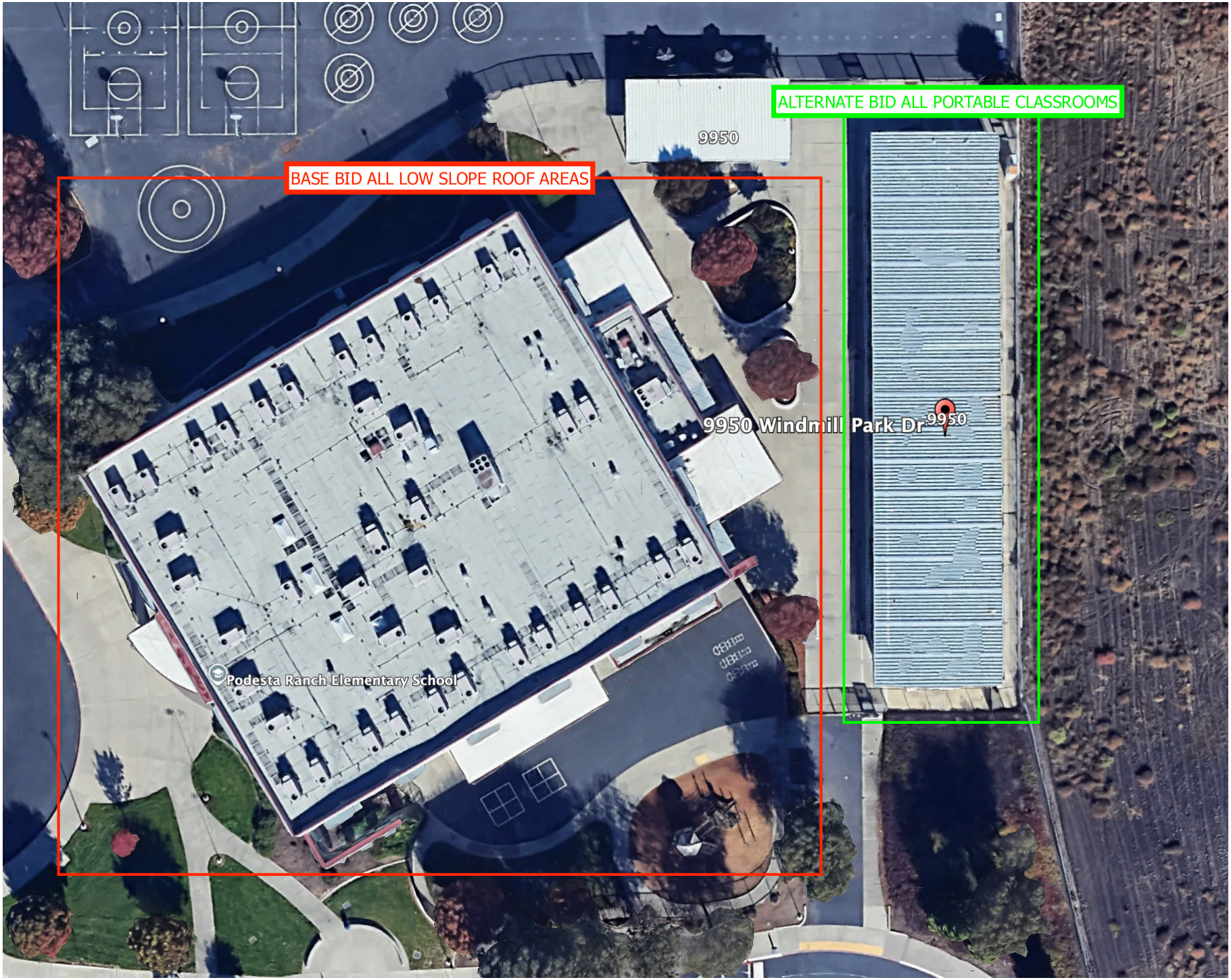
ALTERNATE BID ALL PORTABLE CLASSROOMS
BASE BID ALL LOW SLOPE ROOF AREAS
9950
9950 Windmill Park Dr
9950
Podesta Ranch Elementary School

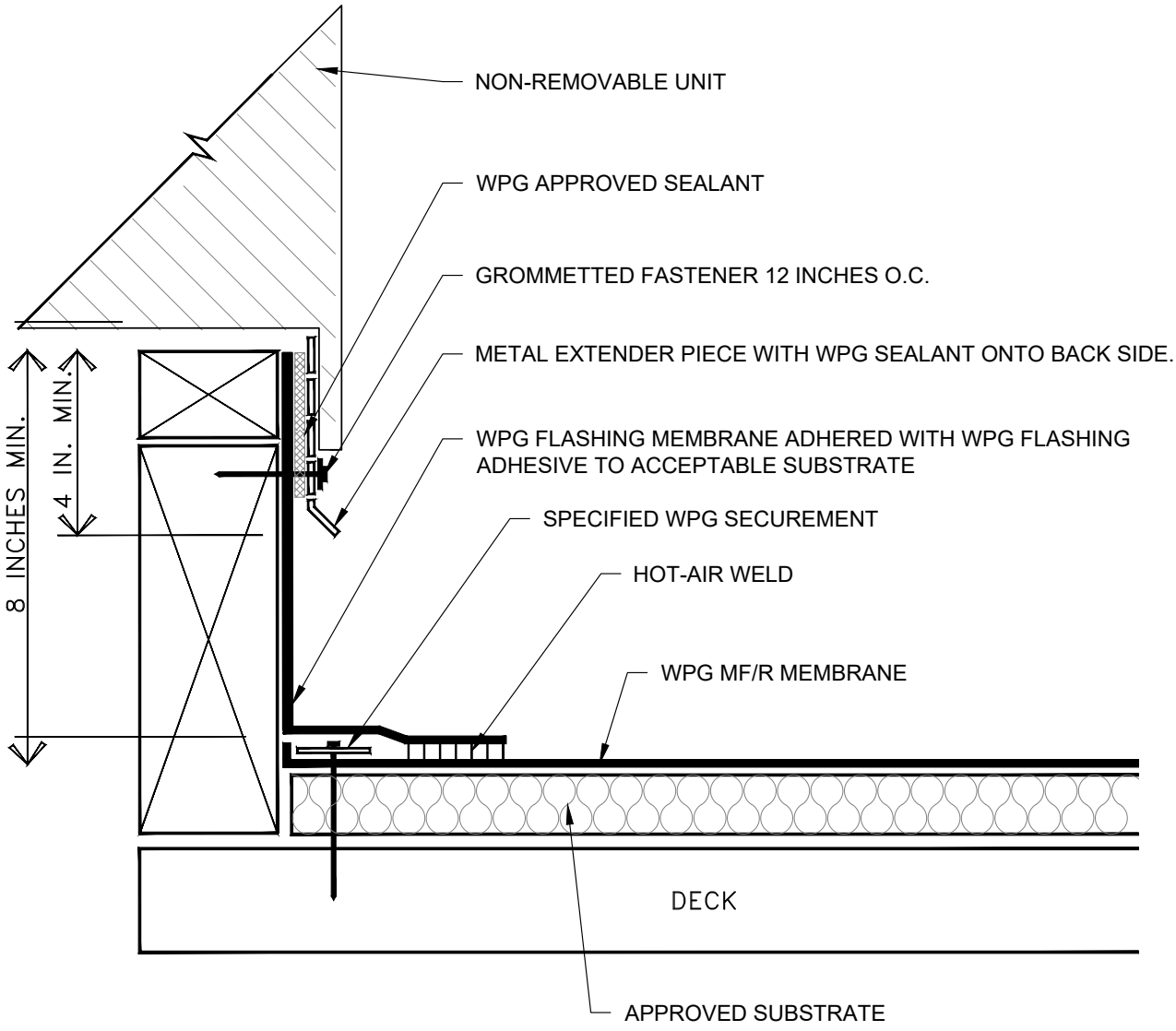

NOTES:

1. ALL FLASHINGS MUST BE A MIN. HEIGHT OF 8" ABOVE THE FIELD MEMBRANE.
2. ALL FLASHING MEMBRANE THAT IS INSTALLED HIGHER THAN 18" VERTICAL MUST BE ADHERED TO SUBSTRATE.
3. WPG SOLARBRITE: WPG SOLARBRITE CUT EDGE SEALANT IS REQUIRED ON ALL NON FACTORY CUT EDGES OF WPG SOLARBRITE

DRAWINGS ON $8\frac{1}{2}$"x11 TITLE BLOCKS ARE NOT TO SCALE.

CURB FLASHING-NON REMOVABLE UNIT

Wise Product Group™
since 1895

PROJECT:	
CUSTOMER:	
ARCHITECT:	
REPRESENTATIVE:	
DATE:	SHT: OF

© 2024 Wise Product Group

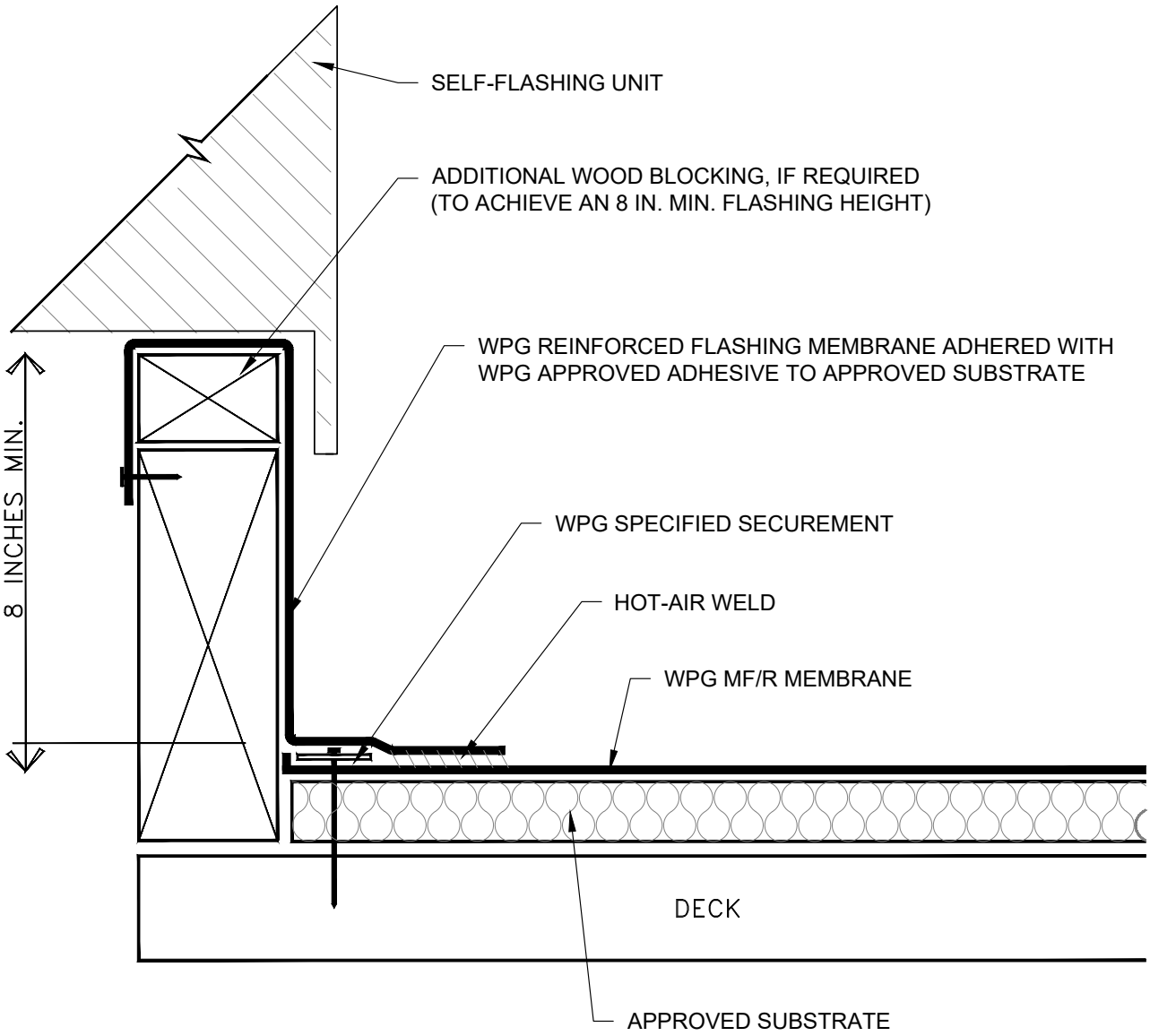

NOTES:

1. ALL FLASHINGS MUST BE A MIN. HEIGHT OF 8" ABOVE THE FIELD MEMBRANE.
2. ALL FLASHING MEMBRANE THAT IS INSTALLED HIGHER THAN 18" VERTICAL MUST BE ADHERED TO SUBSTRATE.
3. WPG SOLARBRITE CUT EDGE SEALANT IS REQUIRED ON ALL NON FACTORY CUT EDGES OF WPG SOLARBRITE

DRAWINGS ON $8\frac{1}{2}$"x11 TITLE BLOCKS ARE NOT TO SCALE.

CURB FLASHING-REMOVABLE UNIT

Wise Product Group™
since 1895

PROJECT:	
CUSTOMER:	
ARCHITECT:	
REPRESENTATIVE:	
DATE:	SHT: OF

© 2024 Wise Product Group

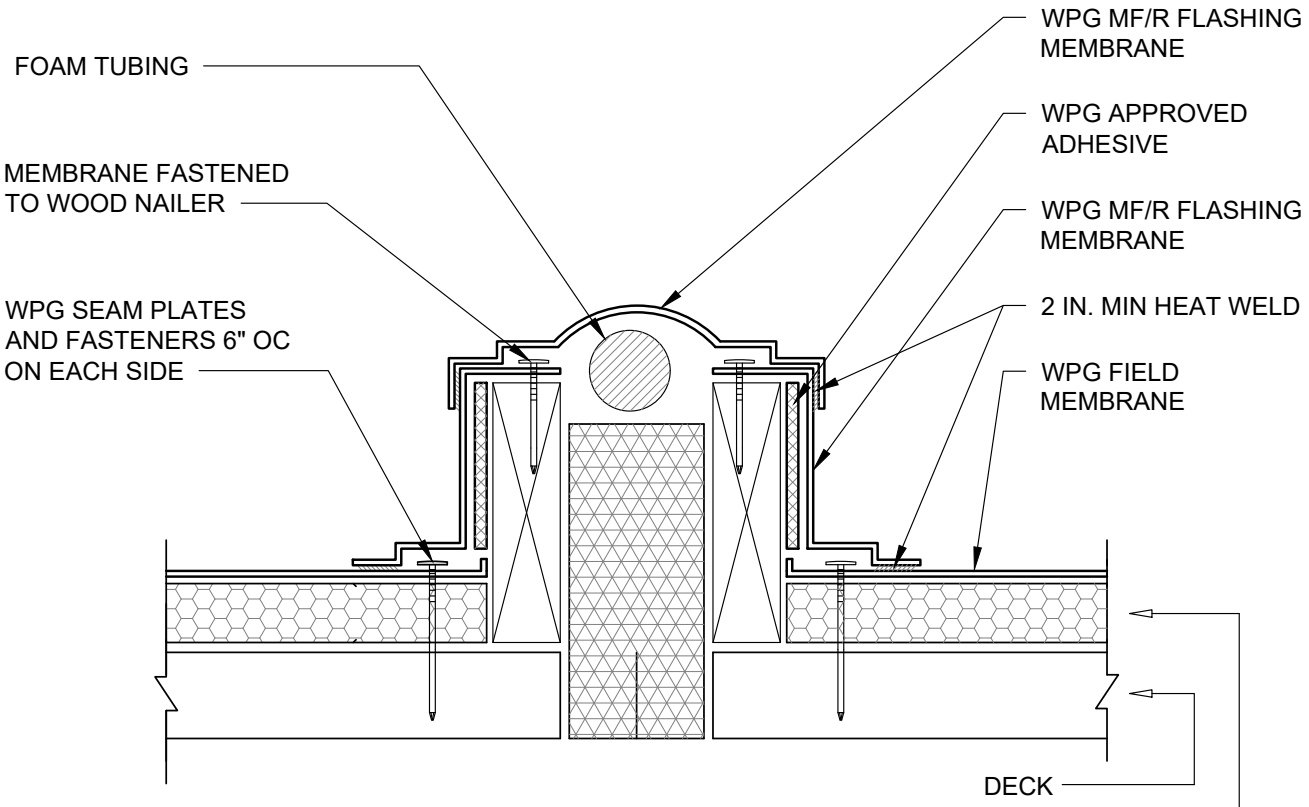

NOTES: WPG SOLARBRITE CUT EDGE SEALANT IS REQUIRED ON ALL NON FACTORY CUT EDGES OF WPG SOLARBRITE

DRAWINGS ON $8\frac{1}{2}$"x11 TITLE BLOCKS ARE NOT TO SCALE.

CURB STYLE EXPANSION JOINT

Wise Product Group™
since 1895

PROJECT:	
CUSTOMER:	
ARCHITECT:	
REPRESENTATIVE:	
DATE:	SHT: OF

© 2024 Wise Product Group

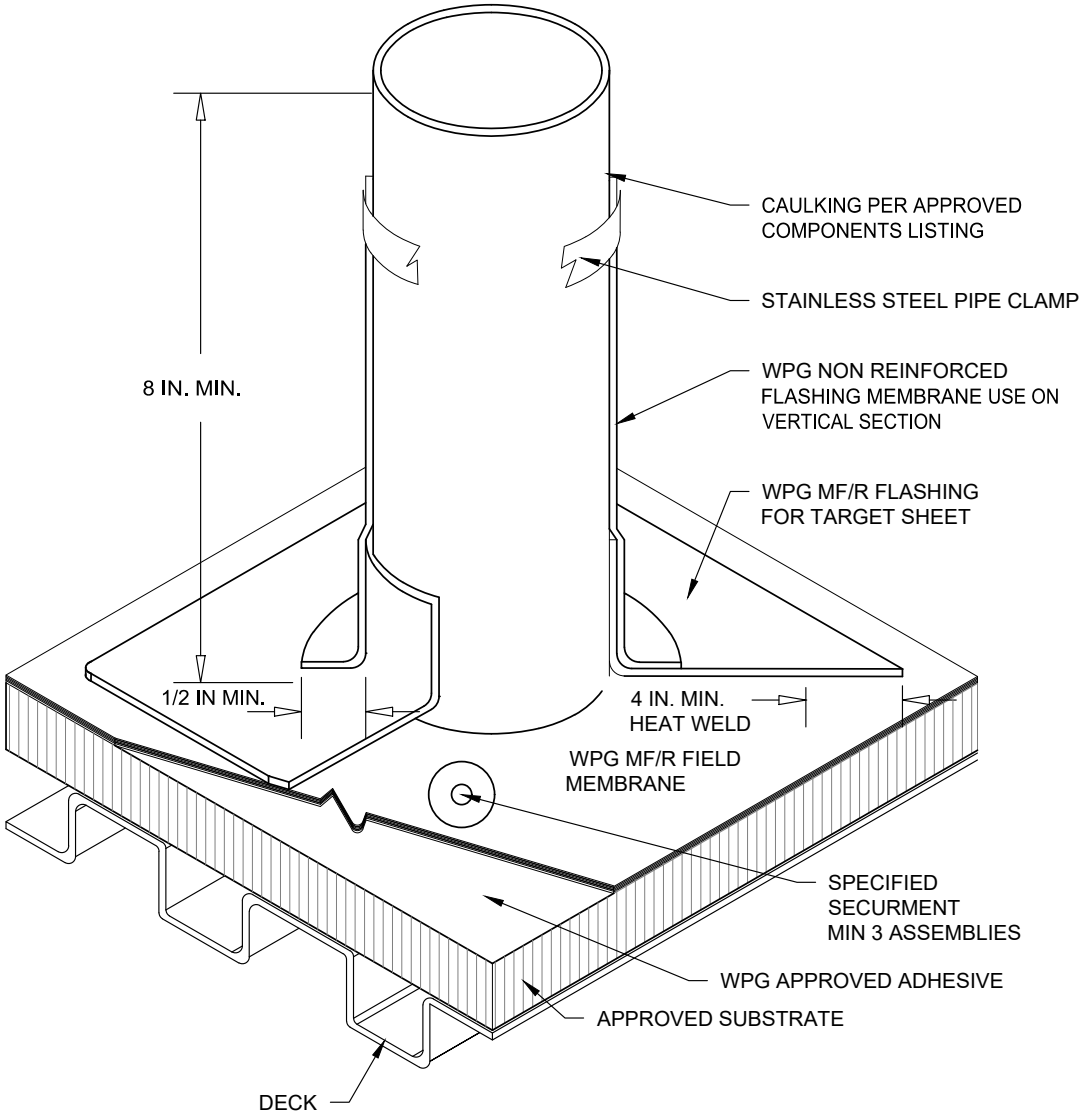

NOTE:

1. REROOFING - ANGLE AT VENT PIPE/ROOF INTERSECTION SHALL BE 90 DEGREES. IF METAL COLLAR EXISTS, REMOVE IT PRIOR TO INSTALLATION OF MEMBRANE. COVER ANY ASPHALT RESIDUE ON PIPE WITH ALUMINUM TAPE PRIOR TO INSTALLATION OF MEMBRANE.

2. A MINIMUM OF 3 FLEX PLATES AND FASTENERS ARE TO BE INSTALLED AROUND THE BASE OF THE PIPE

3. WPG SOLARBRITE CUT EDGE SEALANT IS REQUIRED ON ALL NON FACTORY CUT EDGES OF WPG SOLARBRITE

DRAWINGS ON 8½"x11 TITLE BLOCKS ARE NOT TO SCALE.

FIELD FLASHING VENT PIPE

Wise Product Group™
since 1895

PROJECT:	
CUSTOMER:	
ARCHITECT:	
REPRESENTATIVE:	
DATE:	SHT: OF

© 2024 Wise Product Group

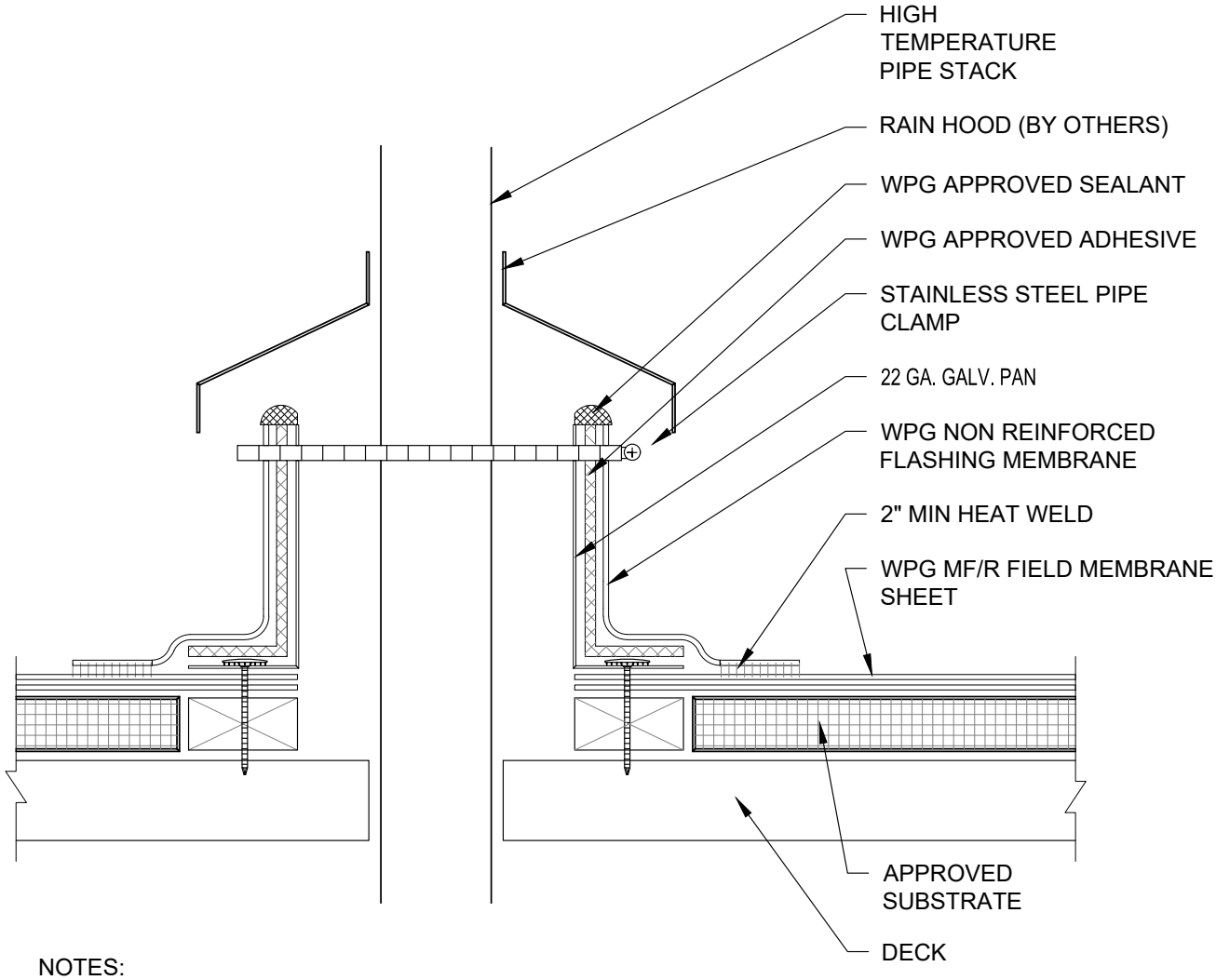

NOTES:

1. THIS DETAIL IS TO BE USED WHEN TEMPERATURE OF STACK EXCEED 140F. COVER ANY ASPHALT RESIDUE ON PIPE WITH ALUMINUM TAPE PRIOR TO INSTALLING MEMBRANE.

2. WPG SOLARBRITE: WPG SOLARBRITE CUT EDGE SEALANT IS REQUIRED ON ALL NON FACTORY CUT EDGES OF WPG SOLARBRITE

DRAWINGS ON $8\frac{1}{2}$"x11 TITLE BLOCKS ARE NOT TO SCALE.

HIGH TEMPERATURE PIPE FLASHING

Wise Product Group™
since 1895

PROJECT:	
CUSTOMER:	
ARCHITECT:	
REPRESENTATIVE:	
DATE:	SHT: OF

© 2024 Wise Product Group

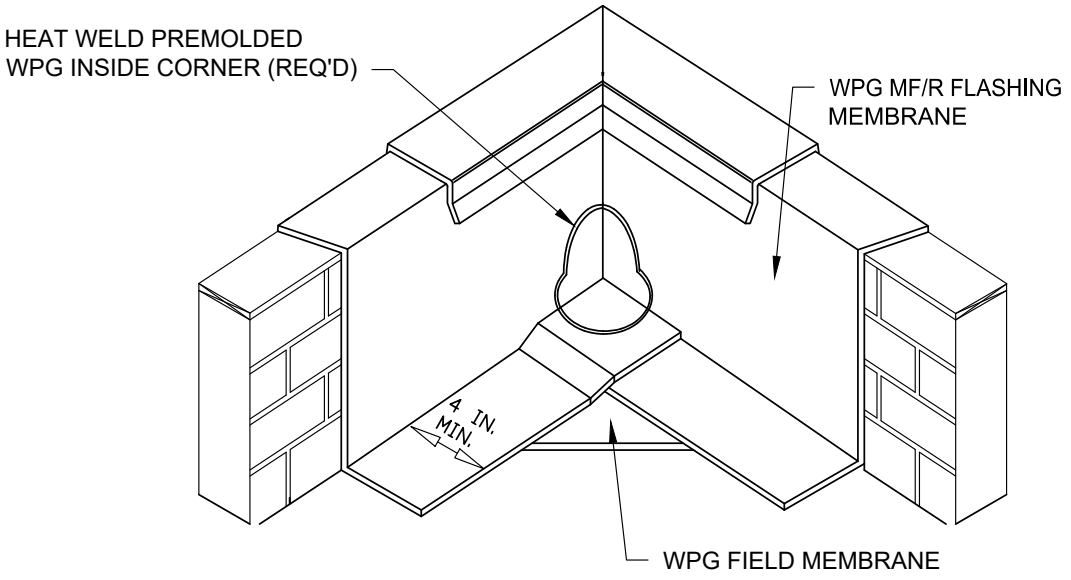

HEAT WELD PREMOLDED OUTSIDE CORNER (REQ'D)

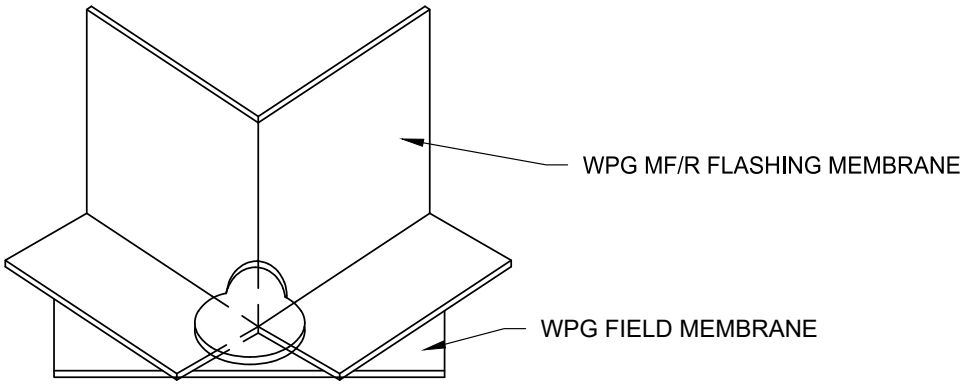

NOTES:

1. WPG OFFERS PREFORMED INSIDE AND OUTSIDE CORNERS FOR PVC AND ELVALOY. WPG OFFERS A UNIVERSAL CORNER FOR SOLARBRITE THAT CAN BE USED FOR AN INSIDE OR OUTSIDE CORNER.

2. WPG SOLARBRITE: WPG SOLARBRITE CUT EDGE SEALANT IS REQUIRED ON ALL NON FACTORY CUT EDGES OF WPG SOLARBRITE

DRAWINGS ON $8\frac{1}{2}$"x11 TITLE BLOCKS ARE NOT TO SCALE.

INSIDE/OUTSIDE CORNER

Wise Product Group™
since 1895

PROJECT:	
CUSTOMER:	
ARCHITECT:	
REPRESENTATIVE:	
DATE:	SHT: OF

© 2024 Wise Product Group

FILENAME: SB_ADHERED_Insulation Attachment.dwg

SOLARBRITE - ADHERED

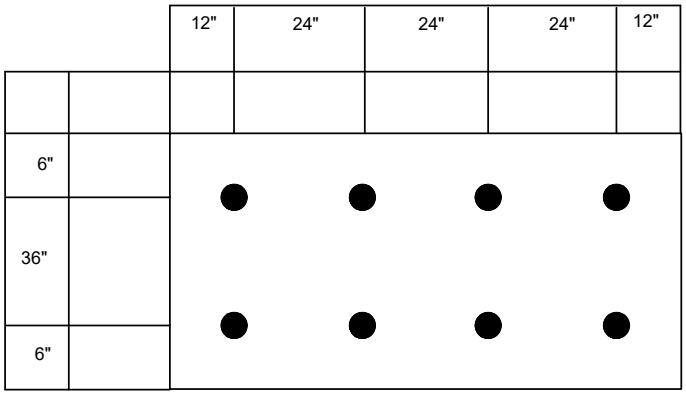

4' X 8' WPG INSULATION OR RECOVER BOARD
8 WPG PLATES AND FASTENERS PER BOARD

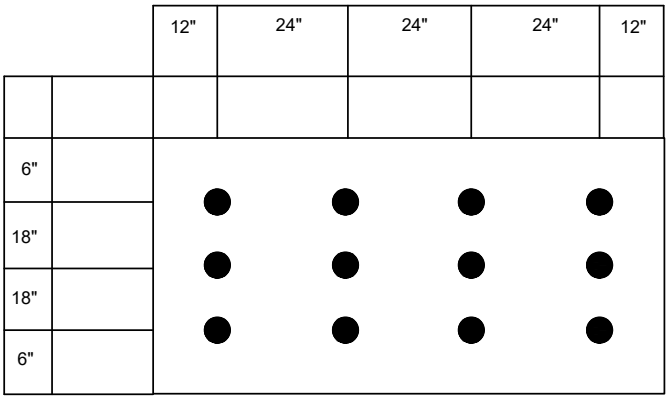

4' X 8' WPG INSULATION OR RECOVER BOARD
12 WPG PLATES AND FASTENERS PER BOARD

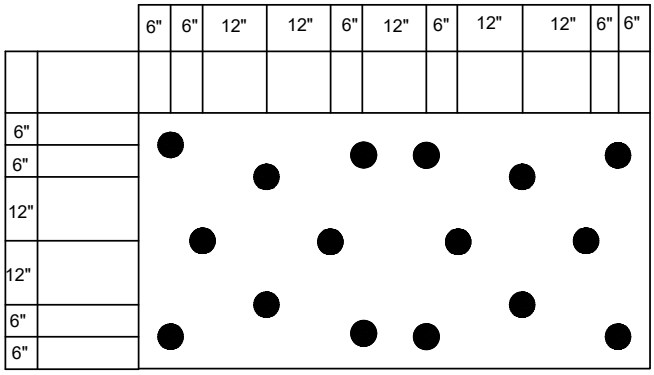

4' X 8' WPG INSULATION OR RECOVER BOARD
16 WPG PLATES AND FASTENERS PER BOARD

DRAWINGS ON 8½"x11 TITLE BLOCKS ARE NOT TO SCALE.

INSULATION ATTACHMENT

Wise Product Group™
since 1895

PROJECT:	
CUSTOMER:	
ARCHITECT:	
REPRESENTATIVE:	
DATE:	SHT: OF

© 2024 Wise Product Group

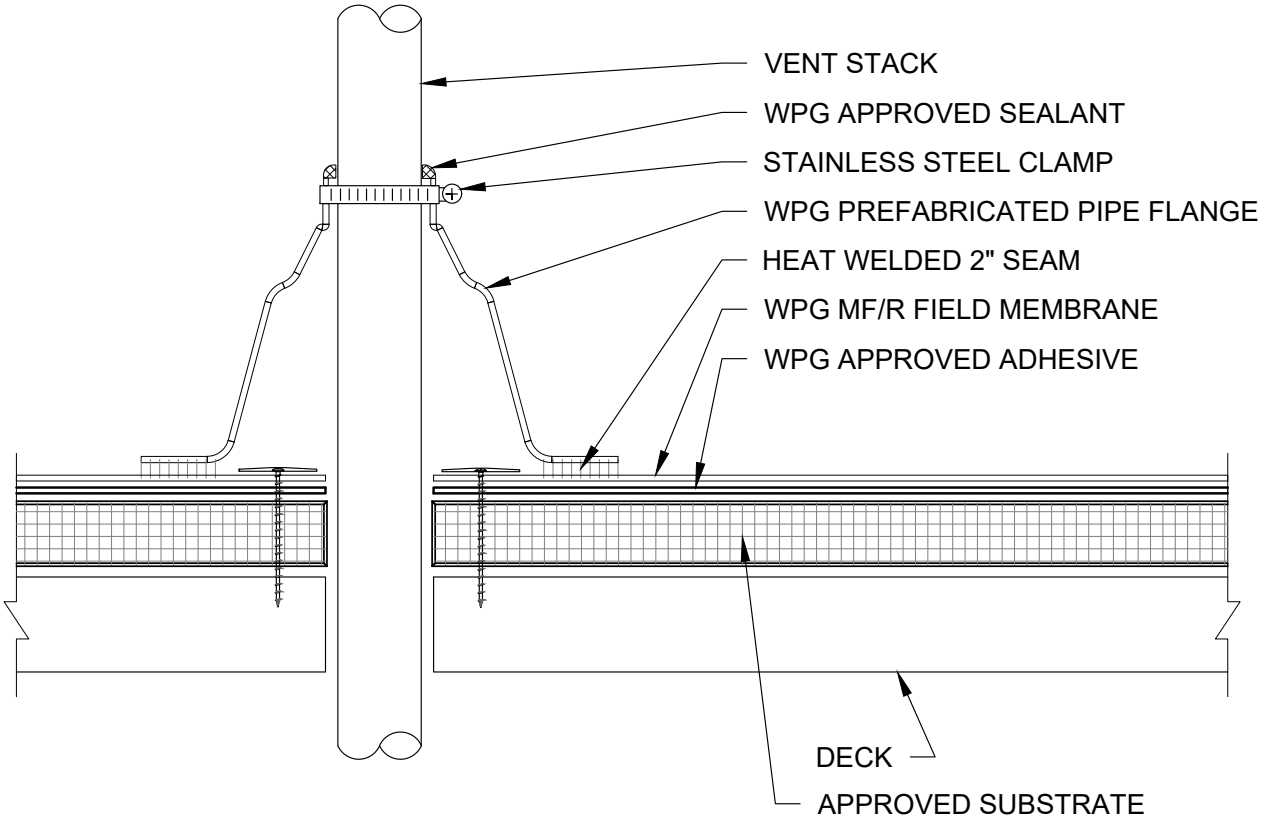

NOTES:

1. PREFABRICATED PIPE FLANGES MAY NOT BE VERTICALLY CUT AND WELDED BACK TOGETHER. IF FLANGE CANNOT BE SLID OVER THE TOP OF THE PIPE, USE METHOD AS DESCRIBED IN DETAIL 'Field Flashing Vent Pipe.dwg'

2. A MINIMUM OF 3 WPG PLATES AND FASTENERS ARE TO BE INSTALLED AROUND THE BASE OF THE PIPE

3. WPG SOLARBRITE: WPG SOLARBRITE CUT EDGE SEALANT IS REQUIRED ON ALL NON FACTORY CUT EDGES OF WPG SOLARBRITE

DRAWINGS ON $8\frac{1}{2}$"x11 TITLE BLOCKS ARE NOT TO SCALE.

PREFABRICATED VENT PIPE FLASHING

Wise Product Group™
since 1895

PROJECT:	
CUSTOMER:	
ARCHITECT:	
REPRESENTATIVE:	
DATE:	SHT: OF

© 2024 Wise Product Group

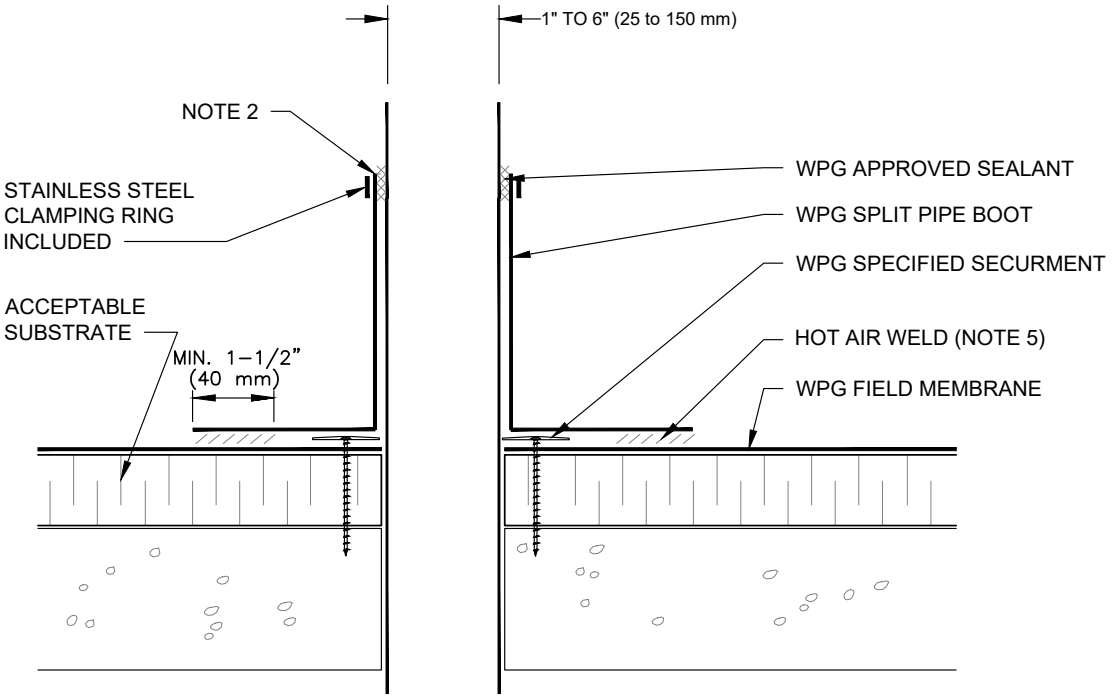

NOTES:

1. REMOVE ALL LEAD AND OTHER FLASHING.
2. TEMPERATURE OF PIPE MUST NOT EXCEED 120F (49C.)
3. PIPE FLASHING DECK FLANGE MUST BE HOT AIR WELDED A MININUM OF 1-1/2" BEYOND FASTENING PLATES.
4. A MINIMUM OF 3 FLEX PLATES AND FASTENERS ARE TO BE INSTALLED AROUND THE BASE OF THE PIPE
5. WPG SOLARBRITE: FLEX SOLARBRITE CUT EDGE SEALANT IS REQUIRED ON ALL NON FACTORY CUT EDGES OF WPG SOLARBRITE

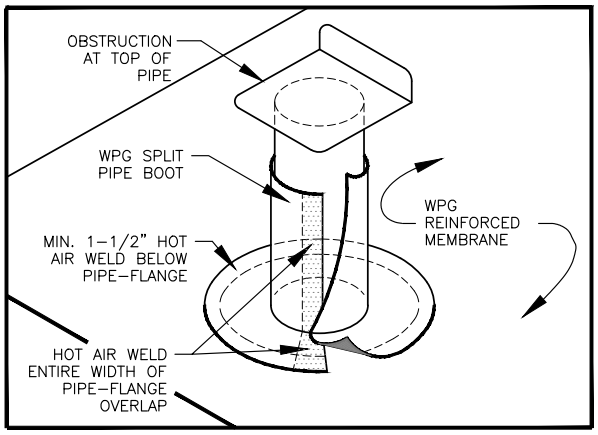

DRAWINGS ON $8\frac{1}{2}$"x11 TITLE BLOCKS ARE NOT TO SCALE.

FLEX SPLIT PIPE BOOT

Wise Product Group™
since 1895

PROJECT:	
CUSTOMER:	
ARCHITECT:	
REPRESENTATIVE:	
DATE:	SHT: OF

© 2024 Wise Product Group

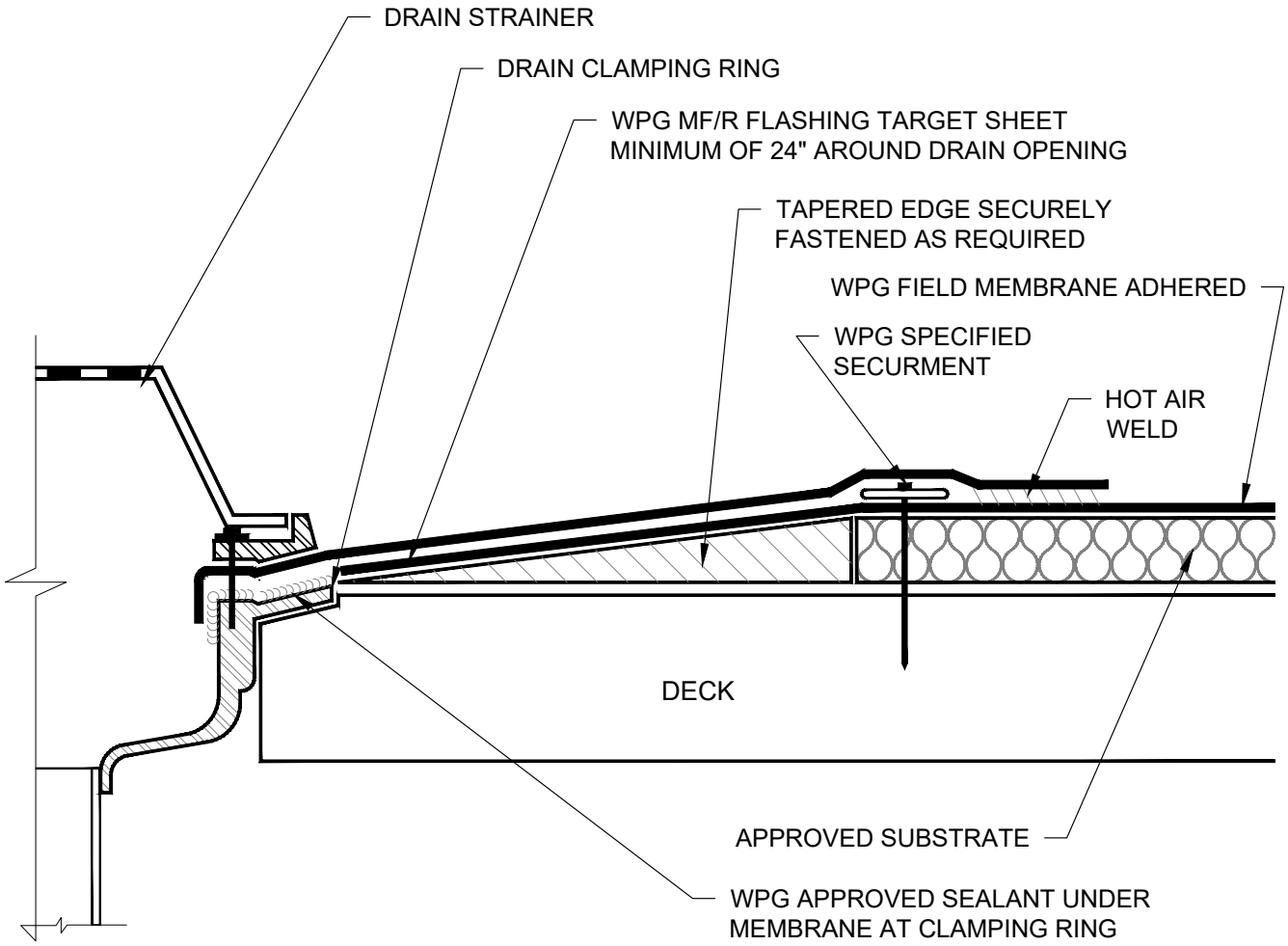

NOTES:

1. EXISTING DRAIN BOWL, CLAMPING RING AND DRAIN ACCESSORIES ARE TO BE CLEANED FREE OF ALL CONTAMINATES.

2. WPG MEMBRANE PLATES AND FASTENERS ARE REQUIRED TO BE INSTALLED 12" OC AROUND THE ROOF DRAIN

3. WPG SOLARBRITE: WPG SOLARBRITE CUT EDGE SEALANT IS REQUIRED ON ALL NON FACTORY CUT EDGES OF WPG SOLARBRITE

DRAWINGS ON $8\frac{1}{2}$"x11 TITLE BLOCKS ARE NOT TO SCALE.

STANDARD DRAIN DETAIL

Wise Product Group™
since 1895

PROJECT:	
CUSTOMER:	
ARCHITECT:	
REPRESENTATIVE:	
DATE:	SHT: OF

© 2024 Wise Product Group

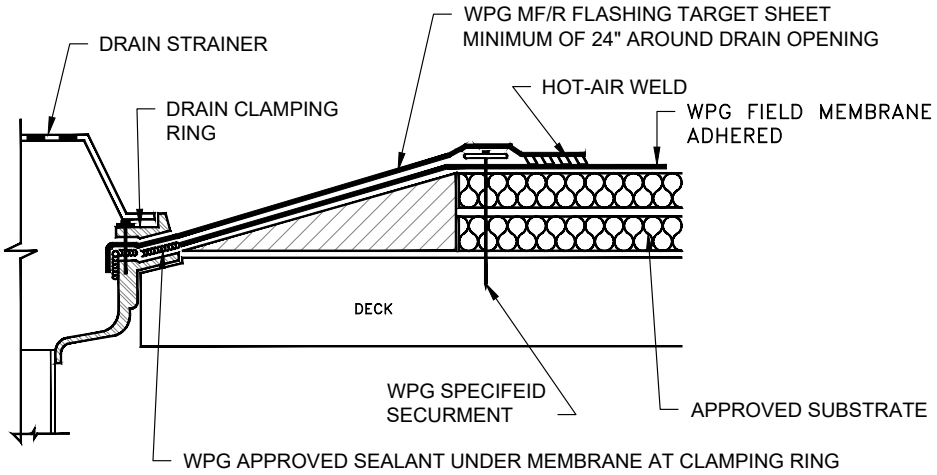

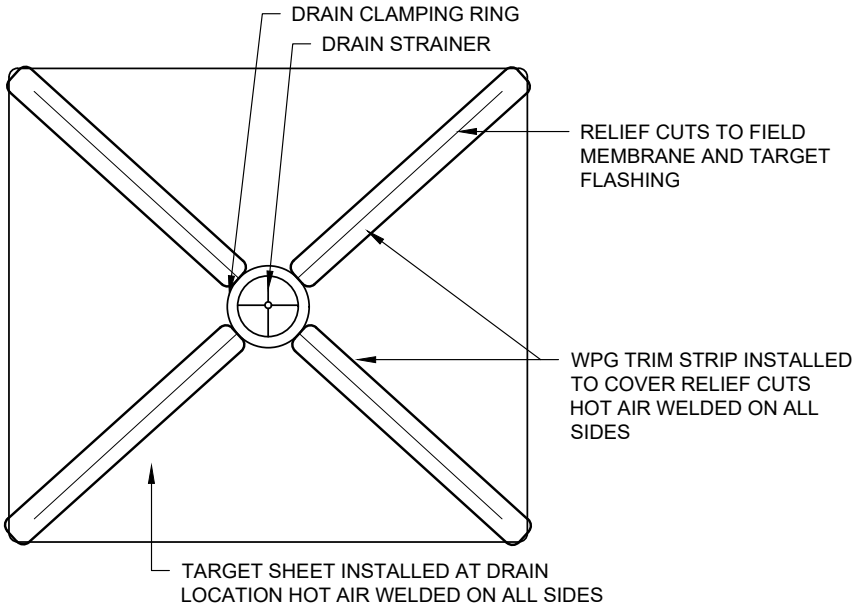

NOTES:

1. EXISTING DRAIN BOWL, CLAMPING RING AND DRAIN ACCESSORIES ARE TO BE CLEANED FREE OF ALL CONTAMINATES.
2. INTENDED FOR USE WITH STEEP SLOPE DRAIN SUMPS THAT ARE 1:12 SLOPE OR GREATER
3. WPG MEMBRANE PLATES AND FASTENERS ARE REQUIRED TO BE INSTALLED 12" OC AROUND THE ROOF DRAIN
4. WPG SOLARBRITE: WPG SOLARBRITE CUT EDGE SEALANT IS REQUIRED ON ALL NON FACTORY CUT EDGES OF WPG SOLARBRITE

DRAWINGS ON $8\frac{1}{2}$"x11 TITLE BLOCKS ARE NOT TO SCALE.

STEEP SLOPE DRAIN DETAIL

Wise Product Group™
since 1895

PROJECT:	
CUSTOMER:	
ARCHITECT:	
REPRESENTATIVE:	
DATE:	SHT: OF

© 2024 Wise Product Group

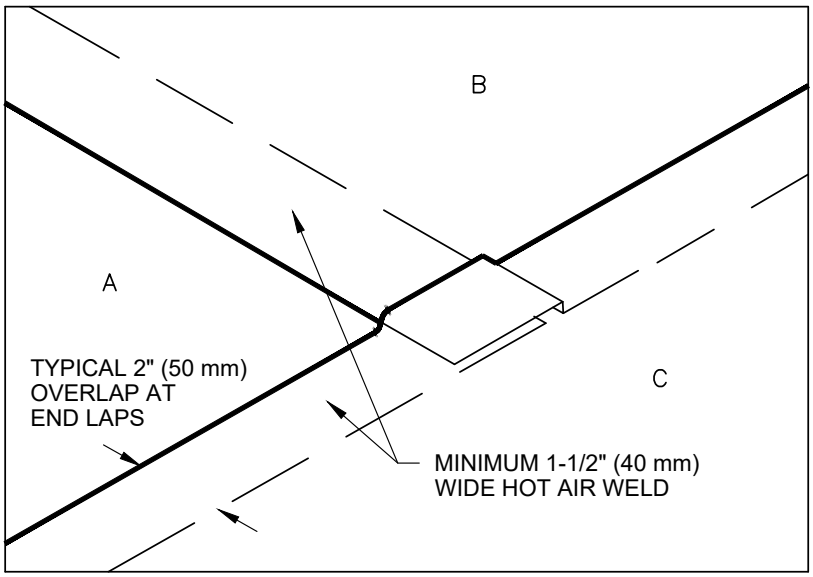

1 POSITION SHEETS AND HOT AIR WELD THE WPG MFR MEMBRANE A MINIMUM OF 1-1/2 (40 mm) INCHES.

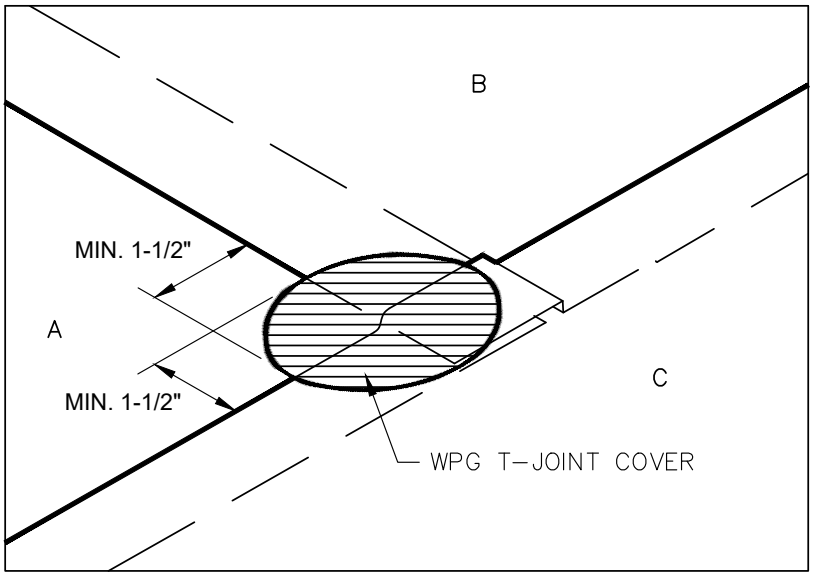

2 INSTALL A 4.5" DIAMETER WPG T-JOINT COVER CENTERED OVER THE SPLICE INTERSECTION ("T-JOINT") AS SHOWN.

WPG SOLARBRITE: WPG SOLARBRITE CUT EDGE SEALANT IS REQUIRED ON ALL NON FACTORY CUT EDGES OF WPG SOLARBRITE

DRAWINGS ON 8½"x11 TITLE BLOCKS ARE NOT TO SCALE.

T-JOINT

Wise Product Group™
since 1895

PROJECT:	
CUSTOMER:	
ARCHITECT:	
REPRESENTATIVE:	
DATE:	SHT: OF

© 2024 Wise Product Group

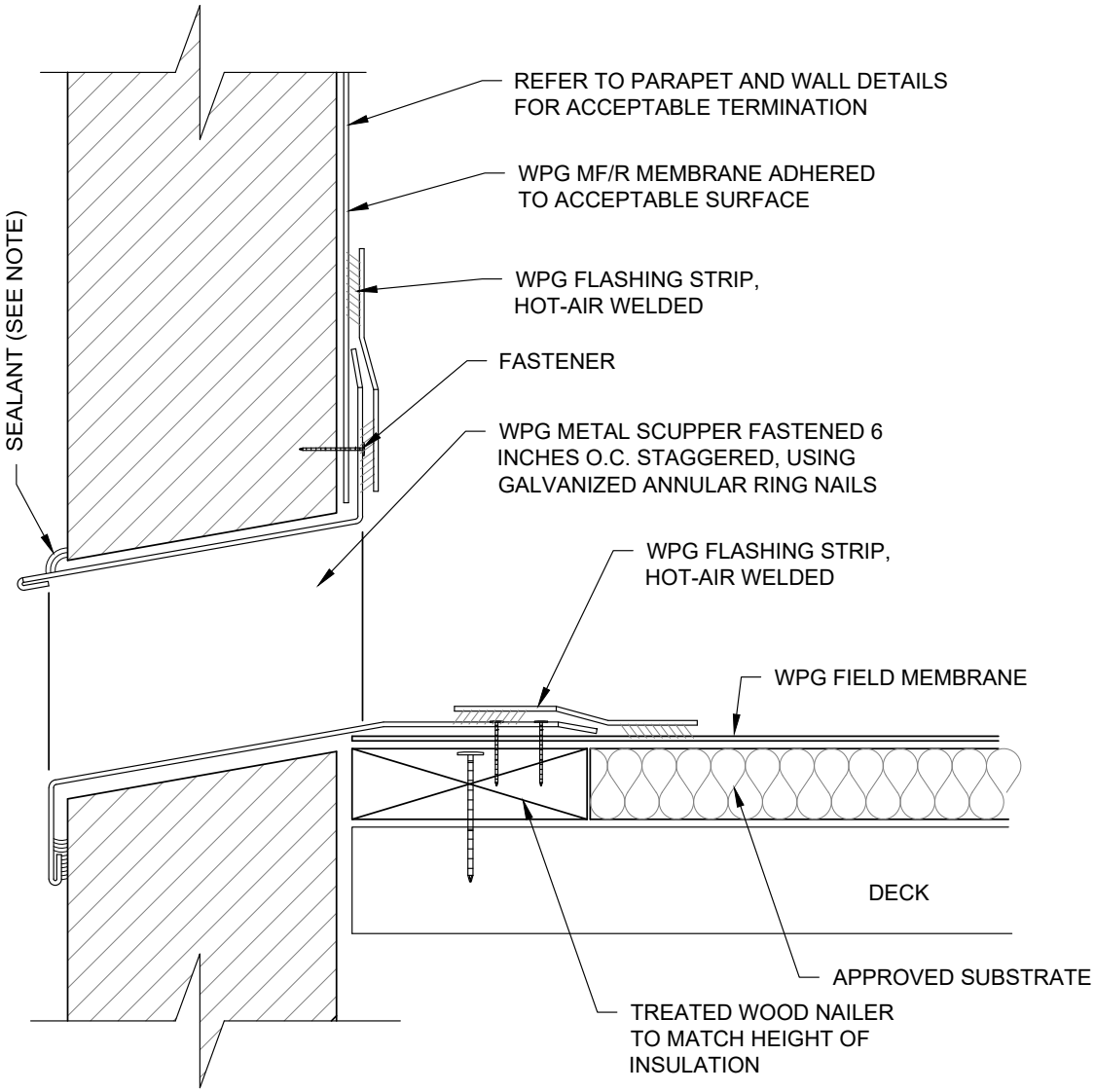

NOTES:

1. NAILERS SHALL BE SECURELY ANCHORED TO THE DECK TO RESIST A FORCE OF 300 POUNDS PER LINEAL FOOT IN ANY DIRECTION.
2. SEALANT IS A MAINTENANCE ITEM. MAINTENANCE IS NOT COVERED UNDER THE WPG WARRANTY.
3. WPG PREFORMED OUTSIDE CORNERS OR FIELD FABRICATED CORNERS ARE REQUIRED ON ALL FOUR CORNERS.
4. WPG SOLARBRITE: WPG SOLARBRITE CUT EDGE SEALANT IS REQUIRED ON ALL NON FACTORY CUT EDGES OF WPG SOLARBRITE

DRAWINGS ON $8\frac{1}{2}$"x11 TITLE BLOCKS ARE NOT TO SCALE.

THROUGH WALL SCUPPER

Wise Product Group™
since 1895

PROJECT:	
CUSTOMER:	
ARCHITECT:	
REPRESENTATIVE:	
DATE:	SHT: OF

© 2024 Wise Product Group

WPG WALKWAY PAD

WPG WALKWAY PAD IS NOT TO BE INSTALLED IN CONTINUOUS SECTIONS EXCEEDING 10' IN LENGTH. THE WALKWAY PAD IS NOT TO BE INSTALLED OVER FIELD MEMBRANE OR FLASHING MEMBRANE SEAMS.
ADHERE THE WALKWAY TO THE FIELD MEMBRANE WITH WPG BONDING ADHESIVE.
HOT AIR WELD A 2" EDGE AROUND THE WALKWAY TO THE WPG FIELD MEMBRANE.

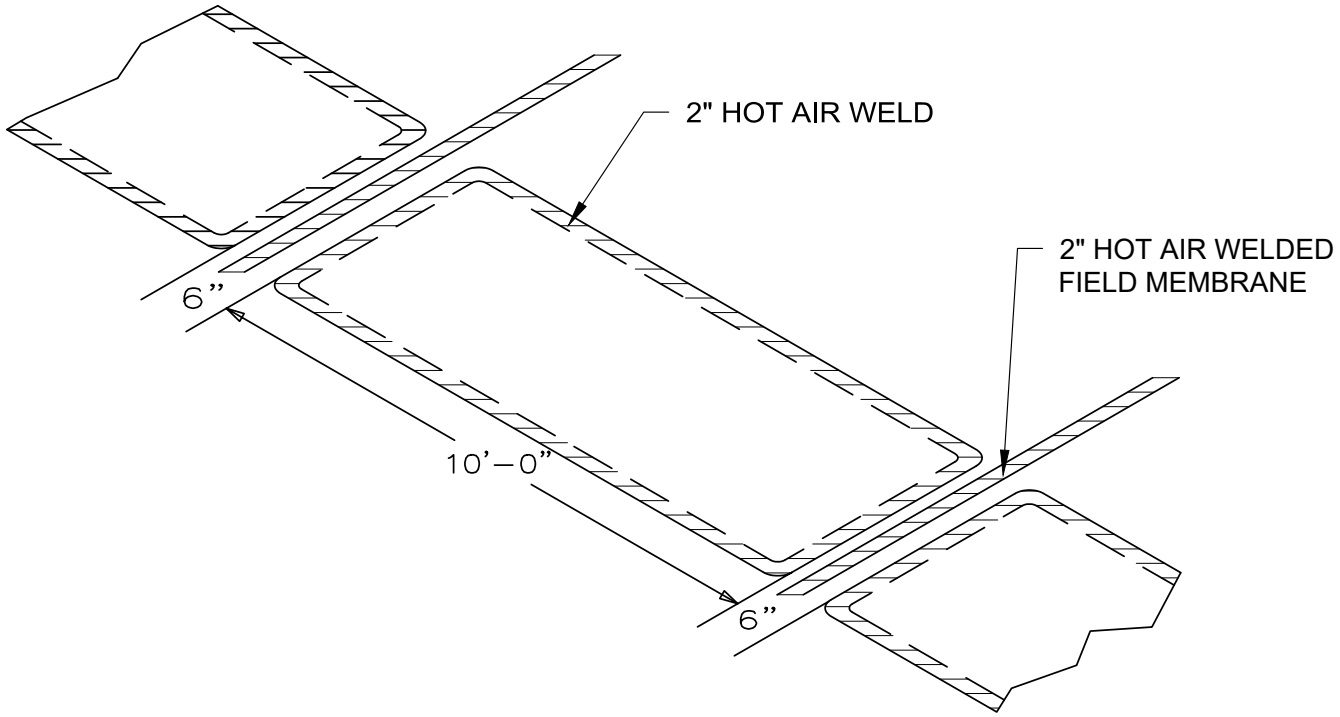

DRAWINGS ON 8½"x11 TITLE BLOCKS ARE NOT TO SCALE.

WALKWAY PAD DETAIL

Wise Product Group™
since 1895

PROJECT:	
CUSTOMER:	
ARCHITECT:	
REPRESENTATIVE:	
DATE:	SHT: OF

© 2024 Wise Product Group

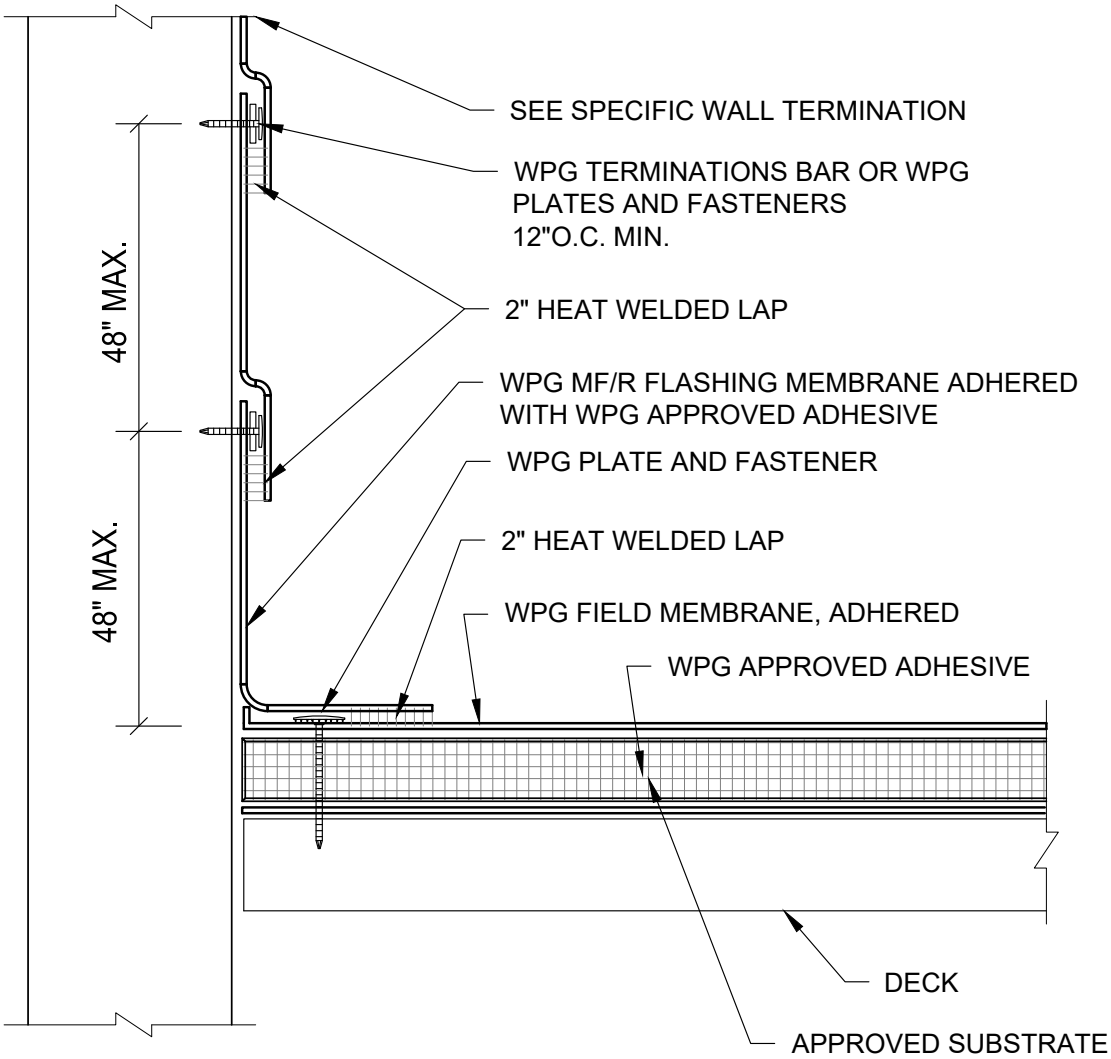

NOTES:

1. ALL FLASHINGS MUST BE A MIN. HEIGHT OF 8" ABOVE THE FIELD MEMBRANE.

2. ALL FLASHING MEMBRANE THAT IS INSTALLED HIGHER THAN 18" VERTICAL MUST BE ADHERED TO SUBSTRATE.

3. WPG SOLARBRITE: WPG SOLARBRITE CUT EDGE SEALANT IS REQUIRED ON ALL NON FACTORY CUT EDGES OF WPG SOLARBRITE

DRAWINGS ON $8\frac{1}{2}$"x11 TITLE BLOCKS ARE NOT TO SCALE.

WALL FLASHING OVER 4' HEIGHT (ALTERNATE)

Wise Product Group™
since 1895

PROJECT:	
CUSTOMER:	
ARCHITECT:	
REPRESENTATIVE:	
DATE:	SHT: OF

© 2024 Wise Product Group

FILENAME: SB_ADHERED_Wall Flashing Strapped Method.dwg

SOLARBRITE - ADHERED

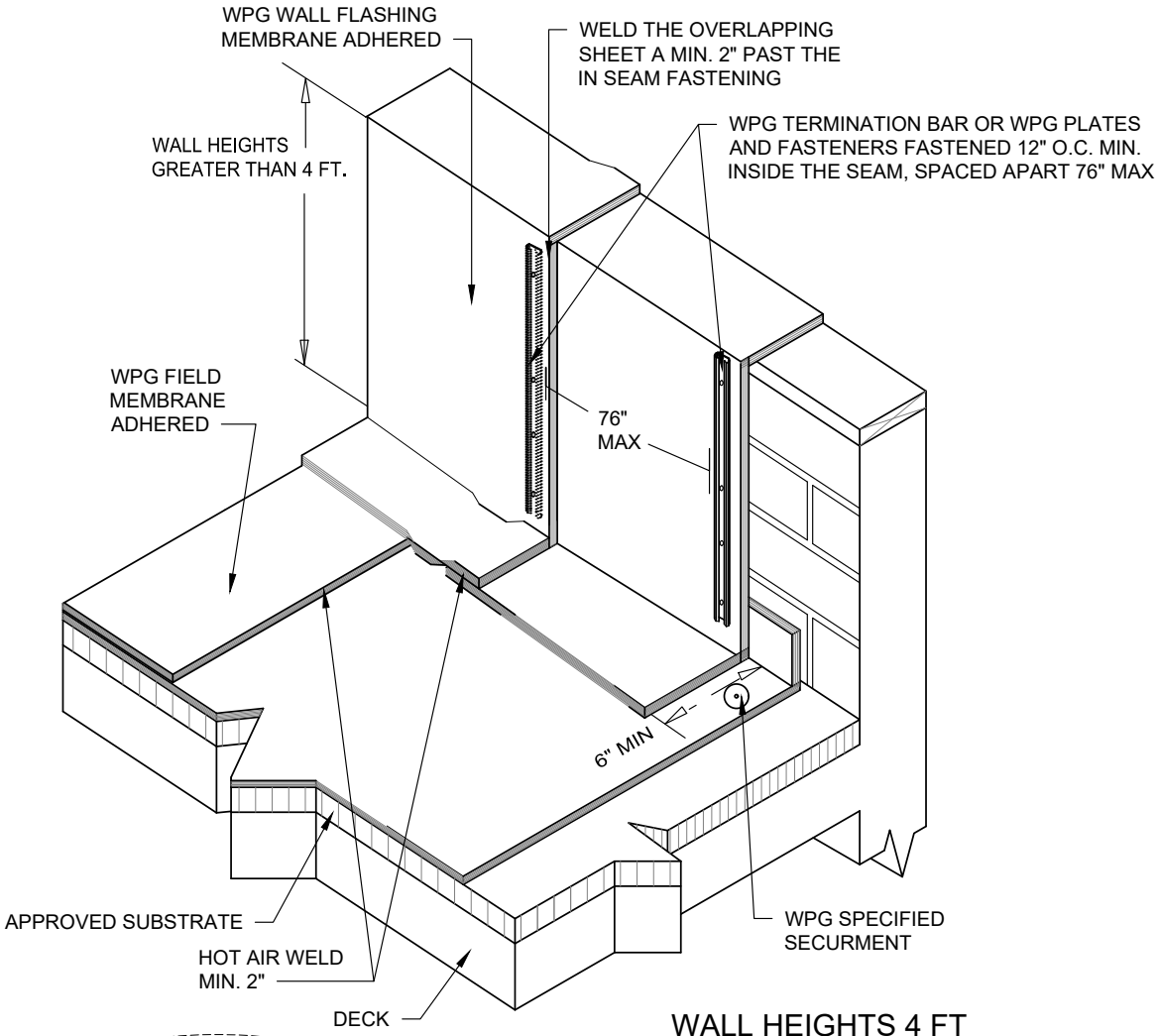

WALL HEIGHTS 4 FT AND GREATER

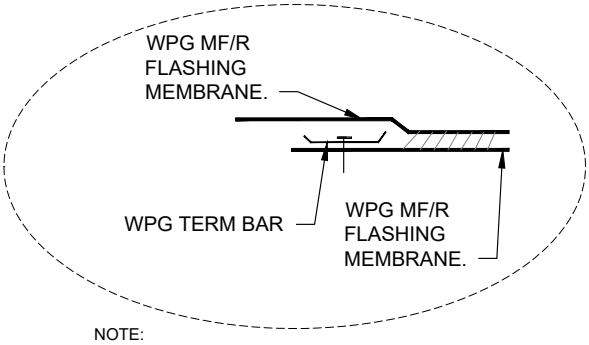

NOTE:
WPG SOLARBRITE: WPG SOLARBRITE CUT EDGE SEALANT IS REQUIRED ON ALL NON FACTORY CUT EDGES OF WPG SOLARBRITE

DRAWINGS ON $8\frac{1}{2}$"x11 TITLE BLOCKS ARE NOT TO SCALE.

WALL FLASHING - STRAPPED METHOD

Wise Product Group™
since 1895

PROJECT:	
CUSTOMER:	
ARCHITECT:	
REPRESENTATIVE:	
DATE:	SHT: OF

© 2024 Wise Product Group

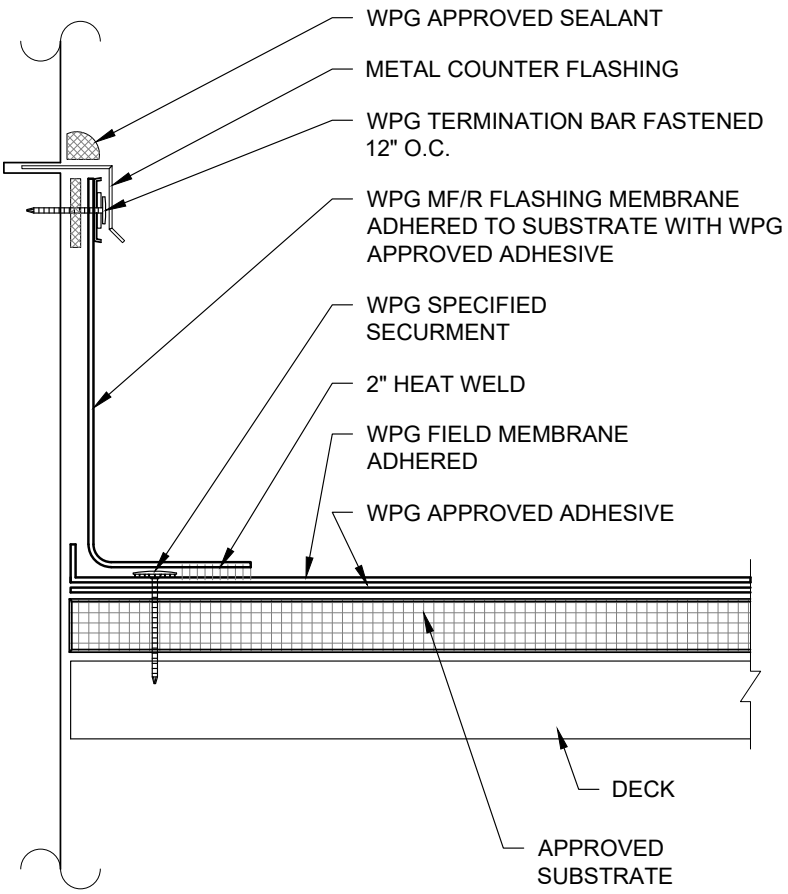

NOTES:

1. ALL FLASHINGS MUST BE A MIN. HEIGHT OF 8" ABOVE THE FIELD MEMBRANE.
2. EXISTING COUNTERFLASHING IS ACCEPTABLE IF ABOVE MAXIMUM FLOOD LEVEL AND METAL IS IN GOOD CONDITION.
3. FUNCTIONAL WEEP HOLE MUST NOT BE BLOCKED
4. ALL FLASHING MEMBRANE THAT IS INSTALLED HIGHER THAN 18" VERTICAL MUST BE ADHERED TO SUBSTRATE.
5. IF FLASHING HEIGHT IS HIGHER THAN 48" PLEASE REFER TO WPG DETAIL: 'Wall Flashing over 4' in Height.dwg'
6. WPG SOLARBRITE: WPG SOLARBRITE CUT EDGE SEALANT IS REQUIRED ON ALL NON FACTORY CUT EDGES OF WPG SOLARBRITE

DRAWINGS ON $8\frac{1}{2}$"x11 TITLE BLOCKS ARE NOT TO SCALE.

WALL FLASHING WITH CUT IN REGLET

Wise Product Group™
since 1895

PROJECT:	
CUSTOMER:	
ARCHITECT:	
REPRESENTATIVE:	
DATE:	SHT: OF

© 2024 Wise Product Group

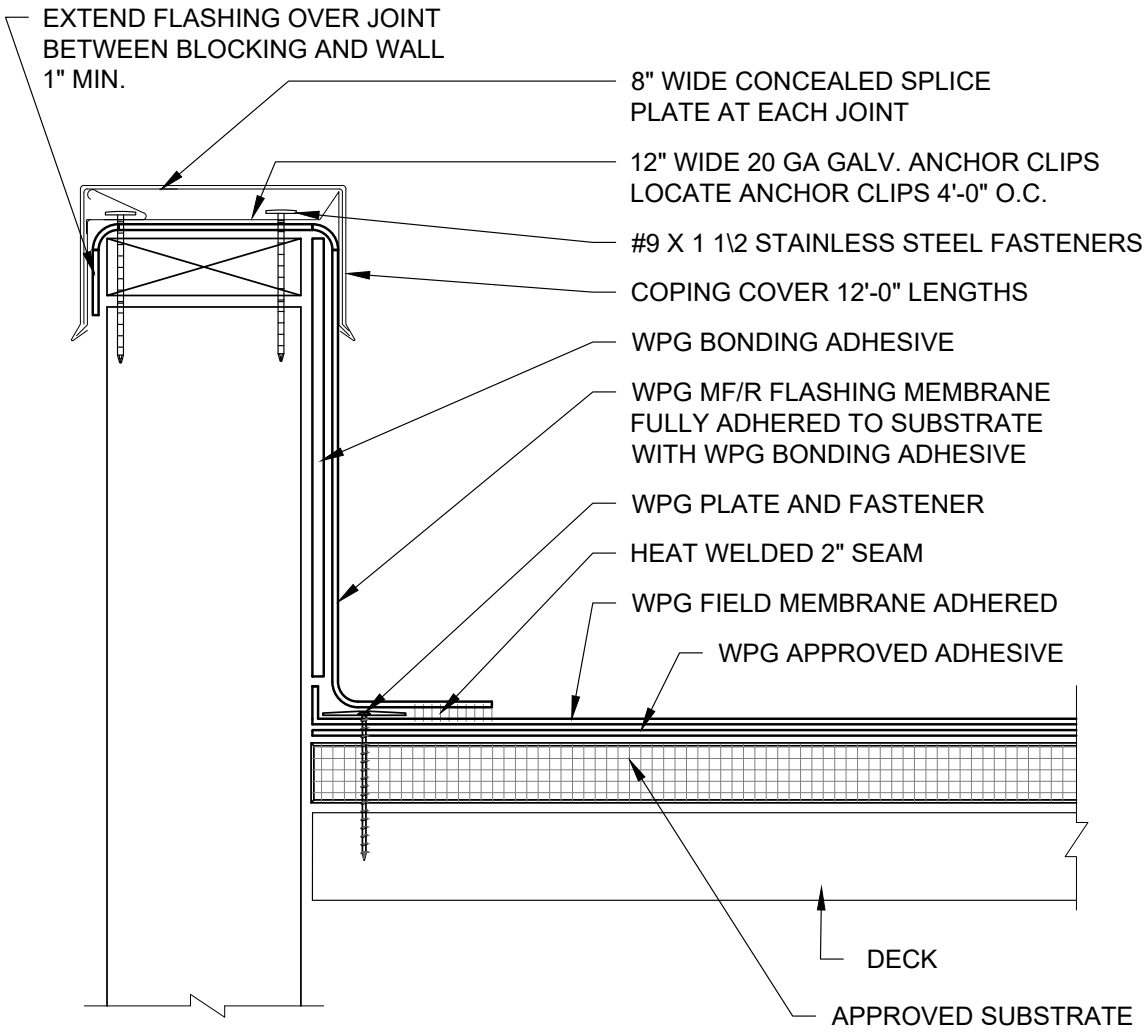

NOTES:

1. ALL FLASHINGS MUST BE A MIN. HEIGHT OF 8" ABOVE THE FIELD MEMBRANE.
2. ALL FLASHING MEMBRANE THAT IS INSTALLED HIGHER THAN 18" VERTICAL MUST BE ADHERED TO SUBSTRATE.
3. IF FLASHING HEIGHT IS HIGHER THAN 48" PLEASE REFER TO WPG DETAIL: 'Wall Flashing over 4' in Height.dwg'
4. WPG SOLARBRITE: WPG SOLARBRITE CUT EDGE SEALANT IS REQUIRED ON ALL NON FACTORY CUT EDGES OF WPG SOLARBRITE

DRAWINGS ON $8\frac{1}{2}$"x11 TITLE BLOCKS ARE NOT TO SCALE.

PARAPET WALL W/ WPG CAP COPING

Wise Product Group™
since 1895

PROJECT:	
CUSTOMER:	
ARCHITECT:	
REPRESENTATIVE:	
DATE:	SHT: OF

© 2024 Wise Product Group

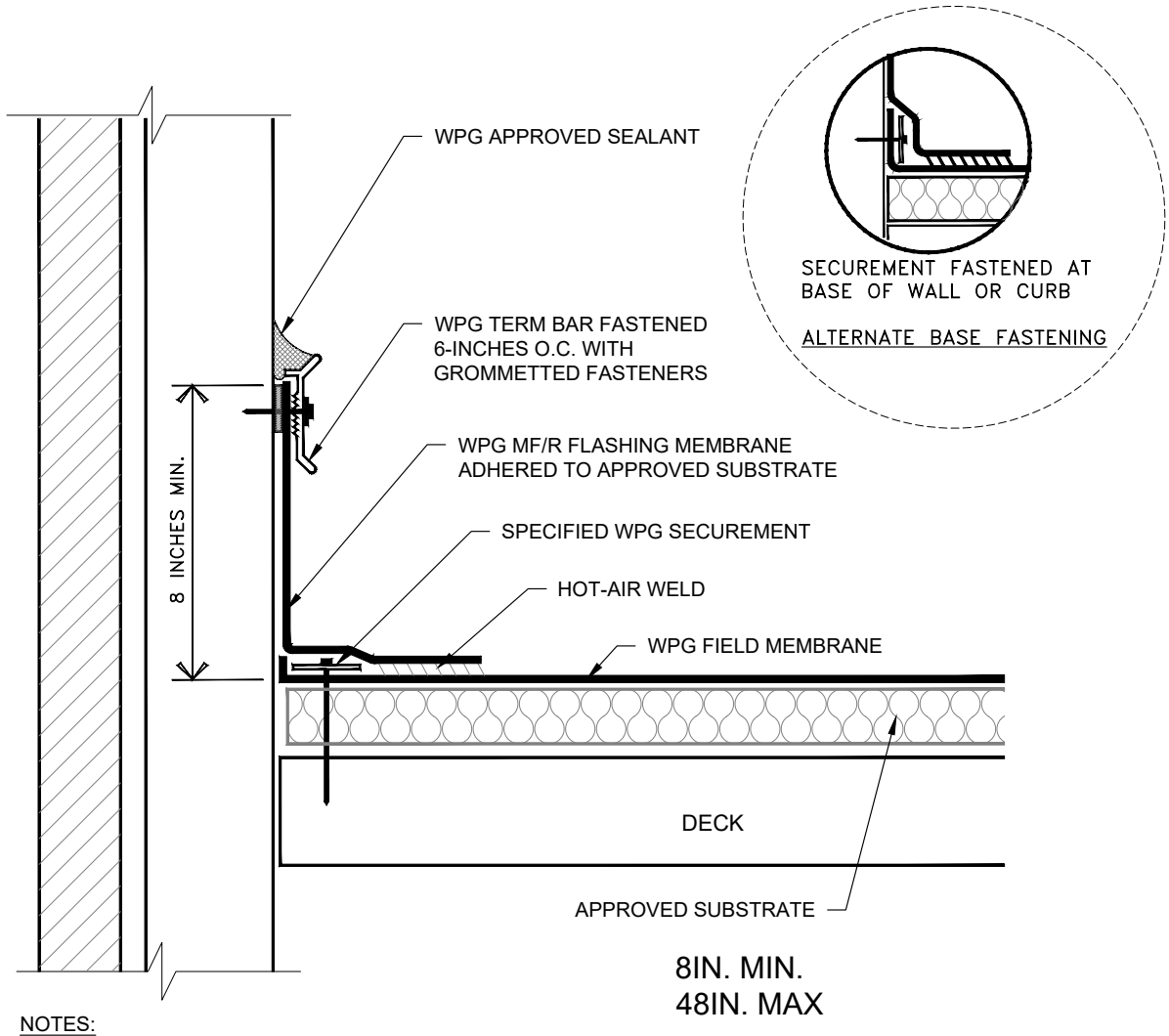

NOTES:

1. SEALANT IS A TWO STEP APPLICATION:
   A) BEHIND TOP OF WPG FLASHING.
   B) TOP OF WPG TERM BAR.

2. SEALANT SHALL BE APPLIED TO CLEAN AND DRYAPPROVED SUBSTRATES.

3. WPG TERM BAR SHALL BE SECURELY ANCHORED WITH GROMMETTED FASTENERS AND PROVIDE ADEQUATE COMPRESSION OF MEMBRANE FLASHING AND SEALANT.

4. ALL FLASHING MEMBRANE THAT IS INSTALLED HIGHER THAN 18" VERTICAL MUST BE ADHERED TO SUBSTRATE.

IF FLASHING HEIGHT IS HIGHER THAN 48" PLEASE REFER TO WPG DETAIL : 'Wall Flashing over 4' in Height.dwg'.

5. WPG SOLARBRITE: WPG SOLARBRITE CUT EDGE SEALANT IS REQUIRED ON ALL NON FACTORY CUT EDGES OF WPG SOLARBRITE

DRAWINGS ON $8\frac{1}{2}$"x11 TITLE BLOCKS ARE NOT TO SCALE.

WALL FLASHING WITH SURFACE MOUNTED REGLET

Wise Product Group™
since 1895

PROJECT:	
CUSTOMER:	
ARCHITECT:	
REPRESENTATIVE:	
DATE:	SHT: OF

© 2024 Wise Product Group