SECTION 00 90 02

BIDDING AND CONTRACT REQUIREMENTS
ADDENDUM NUMBER 02

Date: 8/17/2026

Distributed via:
DIGITAL

To: **Prospective Bidders**

From: Legat Architects, Inc.
1515 5th Avenue, Ste 108
Moline, IL 61265
309.517.5536
www.legat.com

Architect's Project Number:
226057.00

Re: **Addendum Number 02 to the bidding documents for:**
Moline-Coal Valley School District
Moline High School – Baseball & Softball Complex Renovation

This addendum forms a part of the bidding and contract documents and modifies the original bidding documents dated 8/4/2026. Acknowledge receipt of this addendum in the space provided on Bid Form.
FAILURE TO DO SO MAY SUBJECT BIDDER TO DISQUALIFICATION.

I. PART 1 - ADDENDUM TO THE PROJECT MANUAL

A. Document Table of Contents.
   1. Page TOC-1:
      a. **ADD** the following item(s) after item 00 82 00:
         "00 90 02 Addendum Number 02 ..... 9".

II. PART 2 - ADDENDUM TO THE DRAWINGS

A. Drawing C-7.1, titled, CONSTRUCTION DETAILS
   1. Updated Typical Outfield Cross Section Detail
   2. Refer to the attachments for clouded revisions.

B. Drawing AS001, titled, ARCHITECTURAL SITE PLAN
   1. Added Field Composition Notes for clarification on the Varsity Fields.
   2. Added notes clarifying the extents of the synthetic turf system in alternate bid #1
   3. Added to note NS023 that the bleachers are to be installed by the contractor. Bleachers will still be provided by the owner.
   4. Refer to the attachments for clouded revisions.

C. Drawing E-100, titled, ELECTRICAL SITE PLAN.
   1. At GENERAL NOTES:
      a. REVISE note 12.
      b. ADD note 14.
   2. At KEYNOTES:
      a. REVISE note 18.

D. Drawing E-101, titled, ELECTRICAL PLANS – CONCESSIONS BUILDING.
   1. At Drawing 3:
      a. ADD power/data at counter near stairs in Pressbox 112.

E. Drawing E-201, titled, ELECTRICAL PANEL SCHEDULES
   1. REVISE Panel LC1 panel schedule.

III. PART 3 - ADDENDUM TO THE ADDENDUM – NOT APPLICABLE

IV. PART 4 - CLARIFICATIONS

A. Refer to the attached Bidder RFI log for questions and answers.
B. EC shall provide all horizontal and backbone cabling. Owner shall provide the point-to-point equipment for data between concession buildings.
C. Conductors, pole bases, control cabinet, and pole and light installation for all Musco lights shall be under alternate bid #2. Refer to E-100 for additional information.
D. Alternate bid #5 to include only the install of the Musco precast base system.
E. All CMU block is to be the smoothface CMU block as noted in the specifications.

END OF SECTION

This addendum consists of 2 pages.

This addendum has 7 attached pages identified below:

- Drawings:
  - C-7.1 – CONSTRUCTION DETAILS
  - AS001 – ARCHITECTURAL SITE PLAN
  - E-100 – ELECTRICAL SITE PLAN
  - E-101 – ELECTRICAL PLANS – CONCESSION BUILDING
  - E-201 – ELECTRICAL PANEL SCHEDULES
- Miscellaneous:
  - Bidding Questions (2 pages)

Bidding Questions

LEGATARCHITECTS
DESIGN | PERFORMANCE | SUSTAINABILITY

OWNER Moline-Coal Valley School District #40
PROJECT TITLE **Moline High School Baseball & softball Complex Renovations**
PROJECT NUMBER 226057.00
LAST UPADTED 8/14/2026

DATE	PRE-RFI NUMBER	CONTRACTOR	QUESTION	ADDENDUM	RESPONSE
8/7/2026	1	Valley Commercial Construction	M8 and M4 is used in multiple places for CMU walls and also for visual display boards. Can you clarify or change markings for one of these materials?	1	The marker boards have been changed to MB8 and MB4. Two (2) MB4's and One (1) MB8 were added to PRESSBOX 112.
8/7/2026	2	Otto Baum Company	Can you please clarify if a 3'-4" high CMU knee wall is required at the front of the dugouts?	1	A 3'-4" CMU knee wall is not required at the front of the dugout, that is the guardrail system (5/A-401).
8/10/2026	3	Utility Equipment Company	I see that a lot of the drainage pipe is now called out as “HDPE” on pages C-5.1 thru C-5.3. This is no problem and we can quote N12 HDPE pipe for these lines, but I wanted to make sure it doesn’t have to be “HP Storm” sewer pipe per the storm notes on page C-1.0. HP Storm would be a polypropylene product and cost more than the N12 polyethylene pipe.	1	This is a typo on C1.0. N12 HDPE is correct
8/10/2026	4	Utility Equipment Company	The 12” drainage pipe inside the fields is still labeled as “PVC”. Can this pipe be N12 HDPE pipe? Or does it need to be either PVC or HP Storm?	1	Perforated N12 HDPE is acceptable for the 12" collector pipes.
8/11/2026	5	Utility Equipment Company	We’ll also need elevations on the Outlet Control Structure detailed on plage C-7.1 and shown on page C-5.1.	1	This will added to the addendum.
8/11/2026	6	GCI	Attached are the dugout snips for the AED’s. Since they aren’t designed as “Home” and “Visitor”, are they wanting (3) in each dugout?	1	The AEDs have been removed from the dugouts and relocated to the concession stands. There are now only two AEDs and cabinets to be installed in the project.
8/11/2026	7	GCI	For the visual display boards are they wanting (1) 4” x 4’ and (1) 4’ x 8’ markerboard in each dugout?	1	Correct, is (1) 4'x4' markerboard and (1) 4'x8' markerboard at the varsity baseball home locker room and varsity softball home locker room for a total of (2) 4'x4' markerboards and (2) 4'x8' markerboards.
8/11/2026	8	GCI	The second snip, are they wanting (1) 4’ x 4’ and (1) 4’ x 8’ MB in Pressbox 105?	1	Correct, there is (1) 4'x4' markerboard and (1) 4'x8' markerboard in pressbox 105. We are also adding (2) 4'x4' markerboards and (1) 4'x8' markerboard in pressbox 112
8/12/2026	9	Bush Construction	Civil Site Layout Drawings call out 4 Dugout Building structures for the JV Baseball/Softball Fields. There are no Structural Drawings for these structures. Found details on 3/A-401and 3/A-402, but no information given for concrete slab thickness/finish or sub base rock thickness. Please provide?	1	These dugout structures are a premanufactured post and roof structure noted in spec section 11 68 33. Each junior varsity dugout is required to have a concrete slab as noted on the architectural and civil drawings. The premanufactured dugout system requires six concrete piers per dugout (total of 4 dugouts for a total of 24 concrete piers). Concrete pier size to be 2'-0" in diameter x 4'-6" in depth. Refer to structural drawings (10/S-300) for a typical pier detail.
8/12/2026	10	Bush Construction	Civil Site Layout Drawings call out Alt #4 Varsity Baseball/Softball Locker Rooms. Structural Drawings do not call out the Alternates. Please provide more detail?	1	Thank you for bringing this to our attention. We will get this updated in the next addendum. Please refer to the architectural drawings for the extents of the locker room alternate bid locations.
8/12/2026	11	Bush Construction	In areas where the Synthetic Turf is adjacent to structures or concrete paving/sidewalks, is the Synthetic Turf Curb needed?	1	The concrete curb for the synthetic turf is required at areas along concrete paving and sidewalks. The concrete curb is not required where the turf is adjacent to the dugout structures. The concrete curb is required at the separation between the field of play and the bullpen and other areas that are synthetic turf outside of the field of play. The concrete curb is required around the perimeter of these areas outside the field of play as well.
8/12/2026	12	Bush Construction	On drawing C3.2 close to the top of the page there is this note and drawing on the concrete bin block system. Could you please help us with the scope on this? Are these the lego style concrete blocks? How high do you want the walls to be? Does this need to have concrete support below it or do they just sit on the ground?	1	Correct, these are the lego style concrete blocks. The walls should be two blocks high, so 48" tall. No concrete support below is required as they will just sit on the ground.
8/12/2026	13	Bush Construction	Are all inspections by the ROE? Does that mean that we are not to include any costs for permitting?	1	Yes, all inspections are by the ROE and the State Plumbing Inspector. No costs for building permitting are to be included in the bid.
8/12/2026	14	Bush Construction	Do we have any responsibility for permit and or costs for the site such as NPDES or Cosesco permits?	1	Yes, the GC or applicable subcontractor are required for permitting for the site for the NPDES and SWPPP. The documents for these permits will be provided by the design team.
8/12/2026	15	Bush Construction	I don’t see anything that requires a field office or job trailer, is that correct or do we need to provide one?	1	A field office or job trailer is not required for the project and left up to the contractor on if they would like to provide one.
8/12/2026	16	Bush Construction	For the temporary construction fence what are the expectations for its quantity/locations? Does it need to surround all of the area that is being worked on or do you just want it by the school ring road on the West side of the site?	1	Temporary construction fencing should be provided around the entire site/area of work at the time of construction. The existing fence along the north side of the site can remain as a portion of the temporary construction fence.

Bidding Questions

LEGATARCHITECTS
DESIGN | PERFORMANCE | SUSTAINABILITY

OWNER Moline-Coal Valley School District #40
PROJECT TITLE **Moline High School Baseball & softball Complex Renovations**
PROJECT NUMBER 226057.00
LAST UPADTED 8/14/2026

DATE	PRE-RFI NUMBER	CONTRACTOR	QUESTION	ADDENDUM	RESPONSE
8/12/2026	17	Bush Construction	What can we do the help standardize the costs associated with dewatering? The geo report has a note about seepage at 4 to 21 feet. Could dewatering costs be excluded from the bids and reimbursement from the Owner's contingency?	1	Dewatering above and beyond what is standard will be taken care of through the owner's contingency.
8/12/2026	18	Bush Construction	Follow up to question 11: What is the border of the "Field of Play"? Is it the fence? If this is the case, there appears to be fence/netting around perimeter of the individual Bullpens, Batting Cages, Soft Toss. Do all of these get the turf curb at the as well? Maybe a Marked Up drawing would eliminate the confusion?	1	Refer to the attached annotated AS001 drawing indicating areas for the curb with regard to the synthetic fields.
8/12/2026	19	Bush Construction	In the masonry spec it calls for block sealer. I had the painters bidding that to me even though its in Div 4. Do you think that is allowable with the IMPACT agreement?	1	This is acceptable and is typically done by the painters.
8/12/2026	20	Bush Construction	We saw that lintels were referred to on the drawings but I believe that the mason has bond beams, can you please confirm if any steel lintels are needed for this project?	1	The lintels on this project are bond beams as noted on the lintel schedule on the structural drawings. There is are steel beams at the block dugouts as noted on the structural drawings.
8/12/2026	21	Bush Construction	There is not a spec for Division 5, was that by design so that information is all on the structural drawings?	1	All of this information is on the structural or architectural drawings.
8/13/2026	22	Lovewell Fencing	Do you have a specific manufacturer or look you're going for on the durable rubber strip fence board guard note NS018 on AS001.	1	Yes, the basis of design manufacturer is Bruckman Rubber Co.'s Weedseal Fence and Boarder Guard: https://www.bruckmanrubber.com/
8/13/2026	23	Lovewell Fencing	On sheet C-3.1 the drawing shows the fence on the north side of the detention pond falls under the alternate bid 3 work. If alternate #3 isn't taken does this area not get fence or are we to install a 6'h fence to close the area off?	1	This area would not get fence. The 6' fence shown around the detention pond is also a part of the alternate bid #3.
8/13/2026	24	Lovewell Fencing	On sheet C-3.3 it calls for the varsity baseball outfield fence to be 6' high but on sheet AS001 it calls for an 8' high outfield fence. Which is correct?	1	The Varsity Baseball outfield fence is to be 8' high as noted on AS001.
8/7/2026	25	Tri-City Electric	Note #6 on E-100 states ''existing handhole box with data and conduit to H.S. building district IT area''. And note #7 to provide a 2'' conduit for data from the IT room in the D-wing of the H.S. Are we to assume that there is an existing 2'' conduit from the high school to the existing handhole on the Westside of the drive and we just need to bore a conduit under the drive to a handhole on the Eastside by the dugout? Do we need to install any raceways inside the H.S. for data cabling to the IT area. if so, do you have a distance available?	1	EC to provide a new 2" conduit from the handhole box to the existing IT room in D wing. Note #6 has been updated accordingly. The existing line from the handhole box to the IT room in D wing is existing to remain. Raceways inside the HS for data cabling is not required. Distance is approximately 150'.
8/7/2026	26	Tri-City Electric	General Note 16 on Drawing E-000 states that the EC is to provide the backbone and horizontal cabling. Can we get a line diagram showing the backbone cabling from point A to B and what's needed as far as cable type?	1	Additional information on the cabling has been provided on E-000.
8/7/2026	27	Tri-City Electric	As of now there shows no data cabling in either of the concessions stands. Is this the case or did something get missed?	1	Data cabling, ports, and WAPs have been added to E-101 and E-103
8/13/2026	28	Centennial Contractors	Page A403 calls for alternate block backstop sill but no mention of it in alternate schedule. What is in the base and what is in the alternate for the backstop?	1	This detail is the base bid for the bl30:l37ackstop at the two synthetic fields to the south. The two JV fields to the north will be the fence and wall padding detail which will be added back to the project.
8/14/2026	29	Bush Sports Turf	In alternate #1, it states to have natural grass with drainage and irrigation that matches the 2 JV fields. Are they also wanting to have the infield skin and warning track switched to natural or left synthetic? Are they wanting 3" of sand tilled in? Where is the cut off line for the natural, at the field fence edge? Are the bullpens, batting cage and soft toss area next to the varsity baseball field staying synthetic?	2	The infield skin and warning track are also to be switched to natural grass. The alternate bid for the two varsity fields includes changing the entire field of play area from synthetic turf to a natural grass/dirt playing surface. Refer to the attached updated AS001 for clarification. Under the alternate bid, the batting tunnels, soft toss area, and area adjacent to the visitor bullpen are to still receive synthetic turf.
8/14/2026	30	Bush Sports Turf	On sheet C-3.2, it states that 3" of USGA sand is to be tilled into 6" of native soil. On sheet C-7.1, there is a detail that shows 4" of pea gravel beneath the tilled rootzone. Could there be clarification on which is correct?	2	This detail has been updated and now shows only the sand being tilled into the native soil. The pea gravel has been removed. Refer to the attached updated C-7.1 for clarification.
8/14/2026	31	Bush Sports Turf	On sheet C-7.1, there is a detail that shows a 4" PVC perforated draintile. On C-5.2, it is called out for 2" ADS turfflow. Could there be clarification on which is correct? Are the 2" Turfflow drainlines to have sand channels all the way to the surface?	2	This detail has been updated to now note the perforated draintile generically and to refer to the plan. Intent is to follow what is noted on C-5.2.
8/16/2026	32	Bush Construction	I just wanted to clarify that note NS023 that says "Owner provided aluminum bleachers systems" on AS001 means they are purchasing and installing them so we are not including any costs for bleachers in our bids, is that correct?	2	Note has been udpated to read, "Owner provided aluminum bleacher systems. Contractor installed."
8/17/2026	33	Bush Construction	With the alternate to provide natural turf at the varsity field am I to assume that the curb would be deducted everywhere?	2	Concrete curb will still be required for the areas around the batting tunnels, future soft toss area, and area around the visitor bullpen at the varsity baseball field. See the attached updated AS001 for clarification.
8/17/2026	34	Bush Construction	At the home varsity dugouts they asked about the knee walls on the sies of the dugout are those areas CMU? They appear to be 4' long and 3'-4" high.	2	Yes, these wing walls are the same smoothface CMU as the dugouts and extend out 4'-0" past the full height dugout wall. Height of the wing wall is 3'-4". Refer to detail 2/A-402.

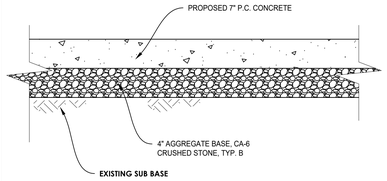

PROPOSED CONCRETE PAVEMENT
NOT TO SCALE

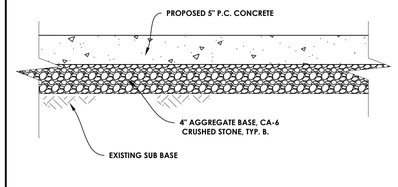

PROPOSED CONCRETE SIDEWALK
NOT TO SCALE

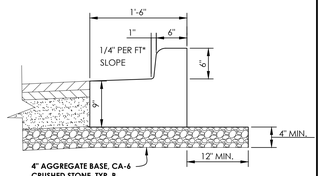

NOTES:
1. CONTRACTION JOINTS TO BE TOOLED OR SAWCUT EVERY 20'
2. FIBER EXPANSION JOINTS TO BE PLACED EVERY 40'
3. *FOR REVERSED PITCH GUTTER FLAG MAINTAIN A 1/4" PER FT. CROSS SLOPE.

REVERSE PITCH CURB AND GUTTER
NOT TO SCALE

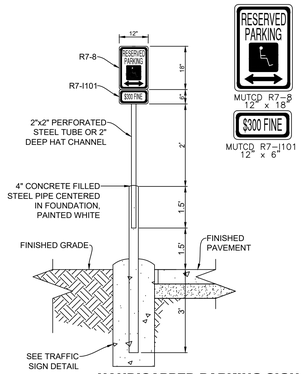

MUTCD R7-8
12" x 18"

MUTCD R7-I101
12" x 6"

HANDICAPPED PARKING SIGN

NOTE: ALL PAVEMENT STRIPING SHALL BE THERMOPLASTIC. SYMBOLS SHALL BE PAINTED.

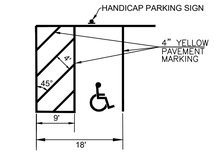

PARKING STALL

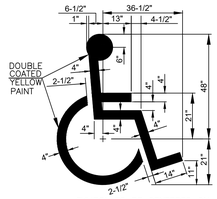

SYMBOL TO BE CENTERED ON WIDTH OF PARKING STALL

PAINTED SYMBOL

HANDICAP STANDARD DETAIL
NOT TO SCALE

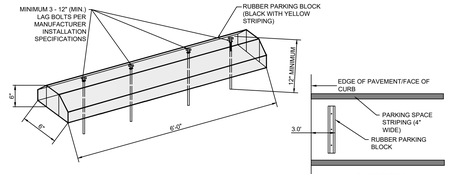

PLACEMENT PLAN

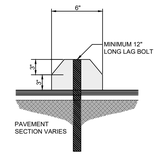

SECTION A-A

LAG BOLT METHOD: RECOMMENDED FOR ASPHALT OR CONCRETE ONLY.

****REFER TO MANUFACTURERS INSTALLATION SPECIFICATIONS.****

TOOLS NEEDED:
-HIGH SPEED HAMMER DRILL WITH A ¾" MASONRY DRILL BIT
-IMPACT WRENCH OR HEAVY RATCHET WITH 2" SOCKET

1. POSITION THE PARKING BLOCK WHERE YOU WANT TO INSTALL IT. USING THE HOLES MOLDED IN THE PARKING BLOCK AS TEMPLATES, MARK THE LOCATION OF EACH HOLE ON THE SURFACE.
2. REMOVE THE PARKING BLOCK. USING A HIGH-SPEED HAMMER DRILL WITH ¾" MASONRY BIT, DRILL A 8" TO 8 ½" DEEP HOLE AT EACH MARKED LOCATION.
3. INSERT A LAG ANCHOR (WITH THE LARGE ROUND HOLE IN THE ANCHOR FACING UP) INTO EACH HOLE. TAP THE ANCHOR INTO THE HOLES WITH A HAMMER SO THAT THE TOP OF EACH ANCHOR IS FLUSH WITH THE SURFACE.
4. REPOSITION THE PARKING BLOCK SO THAT THE MOLDED HOLES LINE UP VERTICALLY WITH THE PILOT HOLES YOU DRILLED. BEGINNING IN THE CENTER HOLE, APPLY FIRM HAND PRESSURE. SLIP A WASHER ONTO A LAG BOLT, INSERT THE BOLT THROUGH THE HOLE IN THE PARKING BLOCK AND TIGHTEN THE BOLT ABOUT THREE QUARTERS OF THE WAY WITH A 2" SOCKET. REPEAT FOR EACH HOLE IN THE PARKING BLOCK. FINISH TIGHTENING EACH BOLT UNTIL JUST SNUG. DO NOT OVER TIGHTEN! EXCESSIVE TIGHTENING MAY DAMAGE THE PARKING BLOCK AND WILL VOID THE WARRANTY.

RUBBER WHEEL STOP
NOT TO SCALE

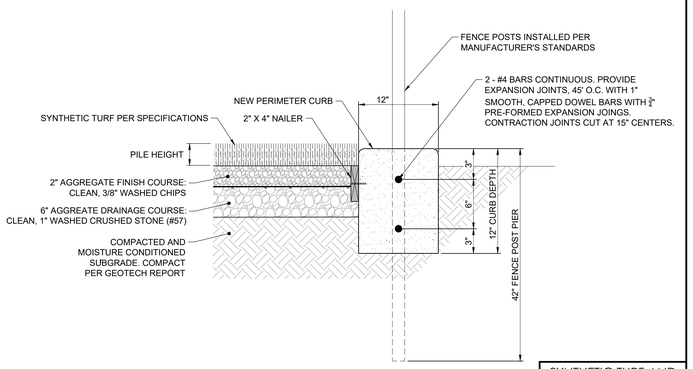

SYNTHETIC TURF AND CURB EDGE DETAIL
NOT TO SCALE

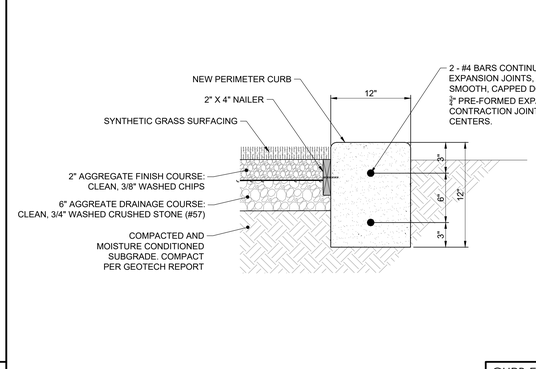

CURB EDGE DETAIL AT BATTING CAGE
NOT TO SCALE

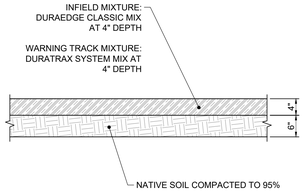

NOTE:
TYPICAL DETAIL PROVIDED BY ARCHITECT

TYPICAL INFIELD AND WARNING TRACK CROSS SECTION
NOT TO SCALE

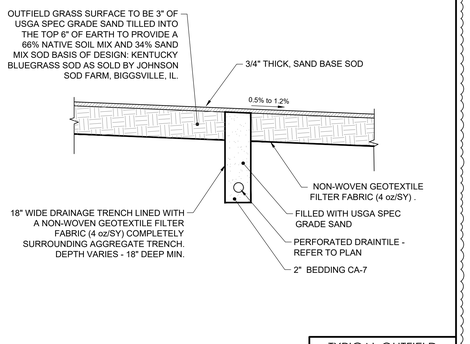

TYPICAL OUTFIELD CROSS SECTION
NOT TO SCALE

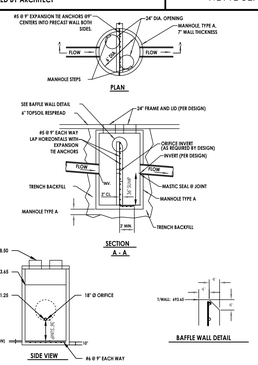

NOTES:
1. STRUCTURE AND BAFFLE WALL FABRICATED USING PORTLAND CEMENT CONCRETE.
2. RESTRICTORS LESS THAN 4" IN DIAMETER MUST USE CITY OF CHICAGO VORTEXT RESTRICTOR (SEE DETAIL)
3. BAFFLE WALL PERMANENTLY INSTALLED AS PRECAST OR CAST IN PLACE. (STEEL PLATE ACCEPTABLE IF PERMANENT).
4. PIPE TO STRUCTURE CONNECTIONS SHALL BE ASTM C923 IN COMBINED SEWER AREAS.

TYPICAL OUTLET CONTROL STRUCTURE
NOT TO SCALE

PRG-SERIES
Grinder Pump

Liberty Pumps
A Family and Employee Owned Company

1 hp
2" Discharge

Designed for sewage applications

Higher flow rates allow use with 2" discharge lines

Operates on standard 115V or 230V 20A circuits

Features

- Heavy cast iron construction
- 115V or 230V 1-phase
- V-Slice® Cutter Technology
- Shreds difficult solids such as feminine products, rags, towels, and wipes that can jam a solids handling style pump
- Hardened stainless steel cutter and plate
- Oil-filled, thermally protected motor
- PRG-Series grinders can be used as a replacement pump in 2" discharge systems using LE40 and LE50-Series solids handling pumps.*

**Consult factory with actual application and head specifications prior to replacing LE40 and LE50-Series pumps.*



Vertical Float Switch
Model PRG101AV

ProVore®



POWDER COATED TOUGH

3 Year Warranty

Model PRG101A

Patent: See
LibertyPumps.com/en-us/patents

SSPMA CERTIFIED

cULus

Submersible Wastewater Pump Association SWPA MEMBER

innovate. evolve.

PRG-Series

Impeller
Cast iron, Class 25 vortex style

Paint
Powder coat

Max Fluid Temperature
140°F (60°C) Intermittent
104°F (40°C) Continuous duty

Motor Specifications
1 hp 12A (115V) 6A (230V)
CSCR style, Class B windings
Oil-filled, thermally protected

Power Cord Type
SJTW Quick-connect design
10' Standard length (25' and 50' optional)

Motor Housing
Class 25 cast iron

Shaft
303 Series stainless steel

Volute
Class 25 cast iron

V-Slice® Cutter Technology
Shreds difficult solids such as feminine products, wipes, rags, and other debris.



440 Series stainless steel hardened to Rockwell 57c

Patent: See
LibertyPumps.com/en-us/patents

Hardware
Stainless steel

Mechanical Shaft Seal
Unitized graphite impregnated silicon carbide

Bearings
Upper and lower ball bearings

Float Switch (automatic models)
Mechanical wide-angle float switch with series (piggyback) plug

Dimensional Data

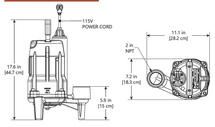

Performance Curve
60 Hz, 3450 RPM

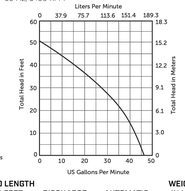

Models

MODEL	HP	VOLTS	PHASE	Hz	AMPS	CORD LENGTH IN FEET	DISCHARGE	AUTOMATIC	WEIGHT IN LBS
PRG101A	1	115	1	60	12	10	2"	Wide-Angle	58
PRG101AV	1	115	1	60	12	10	2"	Vertical Float Switch	58
PRG101M	1	115	1	60	12	10	2"	No	57
PRG102A	1	230	1	60	6	10	2"	Wide-Angle	58
PRG102M	1	230	1	60	6	10	2"	No	57

For optional 25' power cords, add a "-2" suffix to model number. Example: PRG101A-2
For optional 50' power cords (manual models only), add a "-5" suffix to model number. Example: PRG101M-5
Consult factory for 50' automatic power cord options.

Specifications subject to change without notice.

Copyright © Liberty Pumps, Inc. 2026 All rights reserved. LLIT006710-R02/26

Liberty Pumps - 7000 Apple Tree Avenue - Bergen, New York 14416
Phone 800-543-2550 - Fax 585-494-1839 - www.LibertyPumps.com

LEGAT ARCHITECTS
Design with a Difference

Moline - Coal Valley School District

3600 Avenue of the Cities
Moline, IL 61265

ARCHITECT
Legat Architects, Inc.
1515 5th Ave. Suite 108
Moline, IL 61265
P: 309.517.5536
www.legat.com

CIVIL ENGINEER
RTM Engineering
5137 Utica Ridge Rd.
Davenport, IA 52807
P: 563.726.6310
www.rtmec.com

STRUCTURAL ENGINEER
SELECT STRUCTURAL
2435 Kimberly Rd.
Bettendorf, IA 52722
P: 563.359.3117
www.select-structural.com

MEP/FP ENGINEER
RTM Engineering
5137 Utica Ridge Rd.
Davenport, IA 52807
P: 563.726.6310
www.rtmec.com

BASEBALL & SOFTBALL COMPLEX RENOVATION

SIGNATURE

DATE

REVISIONS

	DESCRIPTION	DATE
1	ADDENDUM #1	08.13.2026
2	ADDENDUM #2	08.17.2026

PROJECT NUMBER 0498.6992C
DATE OF ISSUE 08.04.2026
DRAWN BY AQ
REVIEWED BY MM

CONSTRUCTION DETAILS

C-7.1
ISSUED FOR BID

NOTE:
ALL FIELDS SHALL BE IN FULL COMPLIANCE WITH NFHS AND STATE OF ILLINOIS REQUIREMENTS. CONTRACTOR SHALL PROVIDE FOR AND COORDINATE ALL REQUIREMENTS. REFER TO SPECIFICATIONS FOR FIELD BUILDER QUALIFICATIONS.

SITE PLAN LEGEND

- A101 / 1 / Ref — EXTERIOR ELEVATION TAG
- N### — NEW WORK NOTE
- SYNTHETIC TURF GRASS SYSTEM, SEE CIVIL
- SYNTHETIC TURF INFIELD AND WARNING TRACK SYSTEM, SEE CIVIL
- NATURAL GRASS SYSTEM, SEE CIVIL
- ENGINEERED DIRT INFIELD AND WARNING TRACK SYSTEM, SEE CIVIL
- FP-30 — FLAGPOLE - 30'-0" - PROVIDE GROUND MOUNT LIGHTS, SEE ELECTRICAL DRAWINGS
- FPW — GROUND SLEEVE MOUNT FOUL POLE WITH WING - VARSITY BASEBALL: 30'-0" | VARSITY SOFTBALL: 20'-0" | JUNIOR-VARSITY: 20'-0"
- SB — FIXED SCOREBOARD WITH PREFINISHED STRUCTURAL COLUMNS AND ASSOCIATED FOOTINGS, SEE STRUCTURAL
- TLC — STADIUM STYLE LIGHTING FIXTURES - LIGHT FIXTURES, POLES, AN BASE MOUNTING SYSTEM TO BE PROVIDED BY MUSCO LIGHTING UNDER A SEPARATE CONTRACT.

  CONTRACTOR IS RESPONSIBLE FOR THE INSTALLATION OF MUSCO PROVIDED LIGHTING SYSTEM INCLUDING BUT NOT LIMITED TO CONCRETE BASES, CONDUIT, AND POWER AS NOTED ON THE ELECTRICAL DRAWINGS. REFER TO ELECTRICAL DRAWINGS FOR TYPICAL INSTALL DETAILS OF LIGHTING SYSTEM. CONTRACTOR IS RESPONSIBLE FOR COORDINATING ALL INSTALL REQUIREMENTS WITH MUSCO LIGHTING.

  MUSCO LIGHTING CONTACT:
  BILL SMOCK
  309-574-8437
  BILL.SMOCK@MUSCO.COM
- REDI-ROCK RETAINING WALL SYSTEM - REFER TO CIVIL DRAWINGS

ARCHITECTURAL SITE PLAN NOTES

NOTE	DESCRIPTION
NS001	PROVIDE A 10' x 15' CONCRETE PAD FOR OWNER PROVIDED SHED, COORDINATE FINAL LOCATION WITH OWNER.
NS003	PROVIDE NATURAL GRASS JUNIOR-VARSITY BASEBALL FIELD WITH SUB-DRAINAGE SYSTEM, BLACK VINYL COATED CHAIN LINK FENCE DUGOUT AND METAL ROOF, 30'-0" H POLE-TO-POLE TENSION NETTING BACKSTOP SYSTEM - APPROXIMATELY 135 L
NS004	PROVIDE NATURAL GRASS JUNIOR-VARSITY SOFTBALL FIELD WITH SUB-DRAINAGE SYSTEM, BLACK VINYL COATED CHAIN LINK FENCE DUGOUT AND METAL ROOF, 30'-0" H POLE-TO-POLE TENSION NETTING BACKSTOP SYSTEM - APPROXIMATELY 86 LF
NS005	PROVIDE SYNTHETIC TURF SYSTEM VARSITY SOFTBALL FIELD WITH ASSOCIATED CONCRETE PERIMETER CURB - APPROXIMATELY 944 LF, SUB-DRAINAGE SYSTEM, CMU DUGOUT AND METAL ROOF, WINDSCREEN @ PERIMETER FENCE - APPROXIMATELY 940 LF, 30'-0" H NETTING BACKSTOP SYSTEM - APPROXIMATELY 86 LF
NS006	PROVIDE SYNTHETIC TURF SYSTEM VARSITY BASEBALL FIELDWITH ASSOCIATED CONCRETE PERIMETER CURB - APPROXIMATELY 1,792 LF, SUB-DRAINAGE SYSTEM, CMU DUGOUT AND METAL ROOF, 30'-0" H POLE-TO-POLE TENSION NETTING BACKSTOP SYSTEM - APPROXIMATELY 155 LF
NS008	PROVIDE DOUBLE TENSION NETTING BATTING TUNNEL SYSTEM AND ASSOCIATED CONCRETE PIERS FOR SUPPORT POLES. PROVIDE CONCRETE PERIMETER CURB AT SOFTBALL BATTING TUNNELS - APPROXIMATELY 150 LF PER TUNNEL.
NS012	EXISITNG SCHOOL SIGN TO REMAIN. THE CONTRACTOR WILL BE RESPONSIBLE FOR MASONRY REPAIRS IF DAMAGED DURING CONSTRUCTION.
NS013	PROVIDE 6'-0" H VINYL COATED CHAIN LINK FENCE WITH CORRUGATED FENCE TOPPER AT THE TOP RAIL.
NS014	PROVIDE 4'-0" H VINYL COATED CHAIN LINK FENCE WITH CORRUGATED FENCE TOPPER AT THE TOP RAIL.
NS014.1	PROVIDE 4'-0" H x 10'-0" W VINYL COATED CHAIN LINK FENCE GATE WITH VERTICAL GROUND DROP ROD AND ASSOCIATED CONCRETE PIER
NS014.2	PROVIDE 4'-0" H x 24'-0" W VINYL COATED CHAIN LINK FENCE GATE WITH VERTICAL GROUND DROP ROD AND ASSOCIATED CONCRETE PIER
NS015	PROVIDE 8'-0" H VINYL COATED CHAIN LINK FENCE WITH CORRUGATED FENCE TOPPER AT THE TOP RAIL.
NS015.1	PROVIDE 8'-0" H x 3'-0" W VINYL COATED CHAIN LINK FENCE GATE
NS015.2	PROVIDE 8'-0" H x 12'-0" W VINYL COATED CHAIN LINK FENCE GATE WITH VERTICAL GROUND DROP ROD AND ASSOCIATED CONCRETE PIER
NS016	PROVIDE NEW FIXED 7'-0" x 25'-0" SCOREBOARD WITH PREFINISHED STRUCUTRAL COLUMNS AND ASSOCIATED FOOTINGS, SEE STRUCTURAL. SEE ELECTRICAL FOR POWER AND DATA REQUIREMENTS.
NS017	PROVIDE NEW FIXED 6'-6" x 20'-0" SCOREBOARD WITH PREFINISHED STRUCUTRAL COLUMNS AND ASSOCIATED FOOTINGS, SEE STRUCTURAL. SEE ELECTRICAL FOR POWER AND DATA REQUIREMENTS.
NS018	PROVIDE 8" W DURABLE RUBBER STRIP FENCE BORDER GUARD AT THE PERIMETER OF THE NATURAL GRASS CHAIN LINK FENCE - APPROXIMATELY 1,600 LF
NS019	ALTERNATE BID: PROVIDE 8'-0" H VINYL COATED CHAIN LINK FENCE - TYPICAL AT COMPLEX PERIMETER FENCE. ASSOCIATED GATES IN PERIMETER FENCE ARE INCLUDED IN THE ALTERNATE BID.
NS019.1	PROVIDE 8'-0" H VINYL COATED CHAIN LINK FENCE GATE WITH VERTICAL GROUND DROP ROD AND ASSOCIATED CONCRETE PIER
NS020	PROVIDE 3'-0" H BLACK VINYL COATED CHAIN LINK FENCE WITH INTEGRAL ATHLETIC PADDING BELOW THE 30'-0" H TENSION NETTING BACKSTOP SYSTEM.
NS021	PROVIDE TEXT GRAPHIC IN SYNTHETIC TURF GRASS FIELD - FINAL LOCATION TBD BY OWNER. COLOR TO BE DETERMINED.
NS022	PROVIDE REDI-ROCK RETAINING WALL SYSTEM - APPROXIMATELY 430 LF, REFER TO MANUFACTURERS STANDARD INSTALLATION DETAILS FOR MOMENT SLAB CONNECTION - REFER TO CIVIL DRAWINGS
NS023	OWNER PROVIDED ALUMINUM BLEACHER SYSTEMS. CONTRACTOR INSTALLED.
NS024	PROVIDE 3'-4" H SMOOTHFACE CMU BLOCK WALL WITH INTEGRAL ATHLETIC PADDING BELOW THE 30'-0" H TENSION NETTING BACKSTOP SYSTEM. REFER TO DETAIL 7/A-403
NS025	COORDINATE CHAIN LINK FENCE LOCATION WITH NEW TRANSFORMER AND ASSOCIATED CONCRETE PAD AND BOLLARDS. REFER TO CIVIL AND ELECTRICAL DRAWINGS

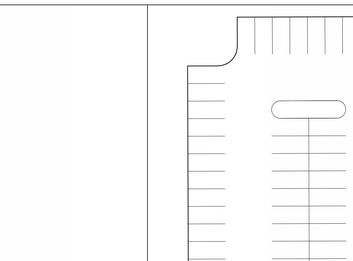

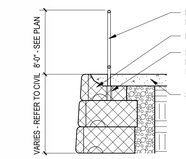

3 SECTION DETAIL - SEGMENTAL RETAINING WALL
1/2" = 1'-0"

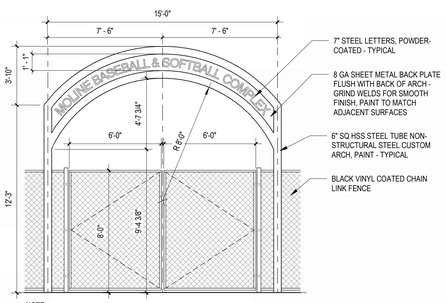

NOTE:
- LETTERS TO BE EQ. DISTANCE BETWEEN TUBE STEEL & MOUNTED TO THE BACK PLATE WITH 2" STANDOFFS
- ARCH TO BE 5" IN FRONT OF CHAIN LINK FENCE

2 MAIN ENTRY GATE ELEVATION
1/4" = 1'-0"



1 ARCHITECTURAL SITE PLAN
1/32" = 1'-0"

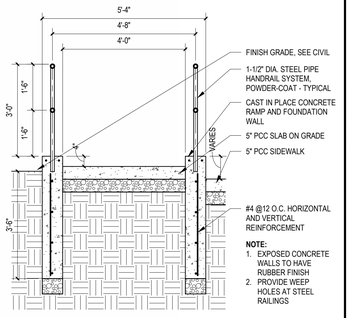

NOTE:
1. EXPOSED CONCRETE WALLS TO HAVE RUBBER FINISH
2. PROVIDE WEEP HOLES AT STEEL RAILINGS

4 ADA RAMP DETAIL
1/2" = 1'-0"

LEGAT ARCHITECTS
Design with a Difference

Moline - Coal Valley School District

BASEBALL & SOFTBALL COMPLEX RENOVATION

3600 Avenue of the Cities
Moline, IL 61265

ARCHITECT
Legat Architects, Inc.
1515 5th Ave. Ste 108
Moline, IL 61265
P: 309.517.5536
www.legat.com

CIVIL ENGINEER
Civil Engineer Name
5137 Utica Ridge Road
Davenport, IA 52807
P: 563.726.6310
www.rtmec.com

STRUCTURAL ENGINEER
IMEG
623 26th Ave
Rock Island, IL 61201
P: 309.788.0673
www.imegcorp.com

MEP/FP ENGINEER
MEP/FP Engineer Name
5137 Utica Ridge Road
Davenport, IA 52807
P: 563.726.6310
www.rtmec.com

SIGNATURE

DATE

REVISIONS

NO.	DESCRIPTION	DATE
1	ADDENDUM #1	08.14.26
2	ADDENDUM #2	08.17.26

PROJECT NUMBER 226057.00
DATE OF ISSUE 08.13.2026
DRAWN BY CS
REVIEWED BY ZC

ARCHITECTURAL SITE PLAN

AS001
ADDENDUM #1

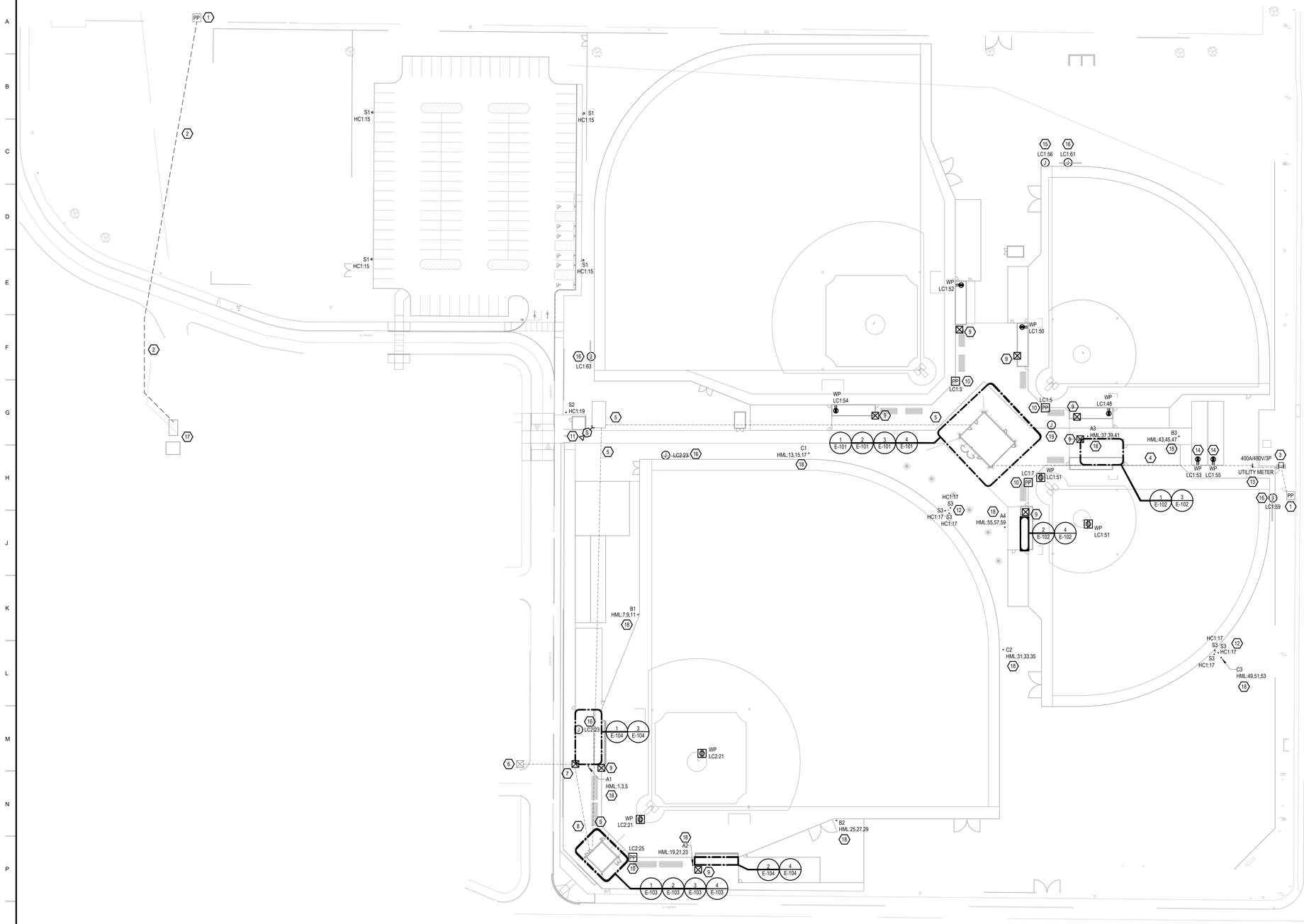

1 E-100 ELECTRICAL SITE PLAN

1" = 40'-0"

GENERAL NOTES:

1. REFER TO GENERAL NOTES AND SYMBOLS ON SHEET E-000.
2. REFER TO PROJECT MANUAL FOR PROJECT SPECIFICATIONS.
3. COORDINATE ALL SITE WORK WITH CIVIL CONTRACTOR. COORDINATE ALL CONDUIT ROUTING WITH THE CIVIL PLANS.
4. CONTRACTOR SHALL EXERCISE EXTREME CAUTION IN EXCAVATING AND TRENCHING ON THIS SITE TO AVOID EXISTING DUCTS, PIPING, AND/OR CONDUITS, ETC., AND TO PREVENT HAZARD TO PERSONNEL AND/OR DAMAGE TO EXISTING UNDERGROUND UTILITIES OR STRUCTURES WHETHER OR NOT SHOWN ON DETAILED AND INSTALLED BY ANY OTHER CONTRACTS. THE CONTRACTORS SHALL IMMEDIATELY NOTIFY THE ENGINEER SHOULD SUCH UNIDENTIFIED CONDITIONS BE DISCOVERED. THESE DRAWINGS AND SPECIFICATIONS DO NOT INCLUDE THE NECESSARY ELEMENTS FOR CONSTRUCTION SAFETY.
5. UTILITY POINTS OF SERVICE AND WORK/MATERIAL SHOWN ARE BASED UPON PRELIMINARY INFORMATION ONLY BY THE UTILITY COMPANIES AND ARE FOR BID PURPOSES ONLY.
6. CONTRACTOR SHALL COORDINATE WITH THE UTILITY COMPANY FOR FINAL AND EXACT WORK/MATERIAL REQUIREMENTS AND CONSTRUCT TO UTILITY COMPANY ENGINEERING PLANS AND SPECIFICATIONS ONLY. CONTRACTOR SHALL FURNISH AND INSTALL ALL CONDUIT, PULL WIRES, CABLES, PULL-BOXES, CONCRETE ENCASEMENT OF CONDUITS, TRANSFORMER PAD, BARRIERS, POLE RISERS, TRENCHING AND BACKFILL, AND PAY ALL UTILITY CO. FEES AND INCLUDE ALL REQUIREMENTS IN SCOPE OF WORK.
7. ALL ELECTRICAL EQUIPMENT MOUNTED OUTDOORS SHALL BE WEATHERPROOF (NEMA-3R).
8. MINIMUM CONDUIT SIZE SHALL BE 1" UNLESS NOTED OTHERWISE.
9. ALL SITE BRANCH CIRCUITS SHALL INCLUDE A NEC SIZED EQUIPMENT GROUND CONDUCTOR.
10. EC SHALL COORDINATE WITH ARCHITECTURAL DRAWINGS FOR RATED WALL INSTALLATION REQUIREMENTS, MOUNTING HEIGHTS, AND FINAL FIXTURE ORIENTATION PRIOR TO INSTALL.
11. ALL LIGHT FIXTURES ARE NEW UNLESS SPECIFIED OTHERWISE.
12. EC TO PROVIDE 1" SCHEDULE 40 PVC CONDUIT WITH MINIMUM #10AWG CONDUCTORS FOR ALL UNDERGROUND SITE LIGHTS. (A1)
13. MUSCO LIGHTING FINAL PLACEMENT, MOUNTING, DISTRIBUTION, AND CONTROLS TO BE COORDINATED WITH MUSCO.
14. UNDER BASE BID, EC TO PROVIDE 1" SCHEDULE 40 PVC CONDUIT TO MUSCO LIGHT LOCATIONS AND HANDHOLE AT MUSCO POLE LOCATIONS. UNDER ALTERNATE BID, PROVIDE MINIMUM #10 AWG CONDUCTORS. EC SHALL VERIFY VOLTAGE DROP WITH FINAL FIELD ROUTING. (A3)

KEYNOTES

#	
1	APPROXIMATE LOCATION OF EXISTING UTILITY RISER POLE.
2	APPROXIMATE EXISTING CUSTOMER OWNED 13.8 KV PRIMARY FEEDER ROUTING FROM EXISTING RISER UTILITY POLE TO EXISTING TO REMAIN MV SWITCHGEAR. EC TO PROTECT AND MAINTAIN LINE THROUGHOUT CONSTRUCTION.
3	APPROXIMATE LOCATION OF NEW UTILITY TRANSFORMER. EC TO COORDINATE NEW SERVICE REQUIREMENTS WITH UTILITY COMPANY PRIOR TO COMMENCEMENT OF WORK. COORDINATE WORK WITH CIVIL CONTRACTOR. PROVIDE BOLLARDS AS REQUIRED PER UTILITY COMPANY AND TRAFFIC PROTECTION. COORDINATE FINAL PLACEMENT WITH FENCING AND UTILITY PROVIDER.
4	EC TO COORDINATE EQUIPMENT ROUTING WITH CIVIL CONTRACTOR, ARCHITECT, AND OWNER PRIOR TO UNDERGROUND ROUTING.
5	EC TO COORDINATE EQUIPMENT ROUTING WITH CIVIL CONTRACTOR, ARCHITECT, AND OWNER PRIOR TO UNDERGROUND ROUTING. FOR POWER CONDUIT, REFER TO 1/E-200 NEW ONE LINE DIAGRAM FOR MORE INFORMATION. FOR DATA, INCLUDE (2) 2" CONDUITS BETWEEN EXISTING BUILDING AND CONCESSION STANDS.
6	EXISTING HANDHOLE BOX WITH DATA AND CONDUIT TO HIGH SCHOOL BUILDING DISTRICT IT AREA. EC SHALL PROVIDE NEW 2" CONDUIT FOR DATA FROM HANDHOLE TO IT ROOM AT EAST END OF D-WING. FIELD COORDINATE ROUTING WITH EXISTING CONDITIONS.
7	PROVIDE HANDHOLE PULL BOX AND 2"C FOR DATA FROM IT ROOM IN D-WING OF THE HIGH SCHOOL. PROVIDE 2"C TO IT RACK IN CONCESSION BUILDING.
8	EC TO COORDINATE EQUIPMENT ROUTING WITH CIVIL CONTRACTOR, ARCHITECT, AND OWNER PRIOR TO UNDERGROUND ROUTING. RUN DATA FROM EXISTING HS BUILDING TO VARSITY BASEBALL CONCESSION STANDS. PROVIDE ROUGH-INS FOR POINT TO POINT FROM VARSITY BASEBALL BUILDING TO MAIN CONCESSION BUILDING.
9	HANDHOLE PULL BOX. PROVIDE 1" EMPTY CONDUIT WITH PULL STRING BACK TO NEAREST 120V PANEL AND 1-1/4" EMPTY CONDUIT WITH PULL STRING FOR DATA BACK TO NEAREST DATA RACK.
10	EC TO PROVIDE POWER AND DATA FOR VIDEO. FOR POWER, PROVIDE 2#8AWG CU + 1#10 AWG CU GND IN 1"C. FOR DATA, PROVIDE 2"C WITH DATA CABLE. COORDINATE EXACT CONDUIT LOCATION WITH EQUIPMENT AND OWNER DESIRED EQUIPMENT LOCATION. POWER AND DATA TO COME FROM THE NEAREST CONCESSION STAND. CAMERA SHALL BE MOUNTED ON BACKSTOP POLE AT 25'-0" ABOVE GRADE. POWER AND DATA TO BE RAN UP BACKSTOP POLE.
11	EC TO PROVIDE ROUGH-IN FOR SECURITY CAMERA. COORDINATE FINAL PLACEMENT WITH OWNER PRIOR TO ROUGH-IN.
12	FLOOD LIGHTING FOR AMERICAN FLAG. COORDINATE FINAL PLACEMENT WITH ARCHITECT AND OWNER PRIOR TO ROUGH-INS.
13	EC TO PROVIDE UNISTRUT WITH 3" GRC POST FOR UTILITY METER AND DISCONNECT. COORDINATE FINAL PLACEMENT WITH UTILITY PROVIDER AND AHJ. DISCONNECT TO BE PROVIDED IN UNOBSTRUCTED LINE OF SIGHT TO UTILITY TRANSFORMER.
14	EC TO MOUNT EXTERIOR RATED RECEPTACLE(S) ON A POST FOR BATTING CAGES.
15	EC TO PROVIDE POWER CONNECTION FOR FUTURE BATTING CAGES. COORDINATE FINAL PLACEMENT WITH CIVIL AND OWNER PRIOR TO ROUGH-IN.
16	EC TO PROVIDE POWER CONNECTION FOR SCOREBOARD. VERIFY FINAL PLACEMENT WITH OWNER AND EQUIPMENT PROVIDER PRIOR ROUGH-IN. COORDINATE WITH MANUFACTURE FOR FINAL LOCATION AND ADDITIONAL REQUIREMENTS.
17	APPROXIMATE LOCATIONS OF EXISTING DISTRICT OWNED MV SWITCHGEAR AND TRANSFORMER TO REMAIN.
18	UNDER ALTERNATE BID, EC TO INSTALL BALLFIELD LIGHTING SYSTEM PROVIDED BY SCHOOL DISTRICT. APPROXIMATE LOCATION OF MUSCO POLE, POLE BASE, AND FIELD LIGHTING SHOWN. COORDINATE EXACT LOCATIONS WITH MUSCO LIGHTING PRIOR TO INSTALLATION. INSTALL LIGHTING, POLE, POLE BASE, AND REQUIRED EQUIPMENT GROUNDING PER MANUFACTURER'S REQUIREMENTS. REFER TO E-300 FOR ADDITIONAL PRELIMINARY DETAILS. REFER TO GENERAL NOTE 14 (A3) FOR CONDUIT REQUIREMENTS.
19	PROVIDE POWER TO GRINDER PUMP. 2#12 AWG CU + 1#12 AWG EQ GND IN 3/4"C. COORDINATE FINAL ELECTRICAL REQUIREMENTS WITH CIVIL. REFER TO CIVIL DRAWINGS FOR EXACT LOCATION.

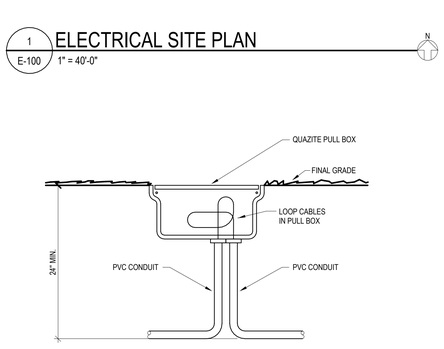

4 E-100 GROUND MOUNTED PULL BOX

SCALE: N.T.S.

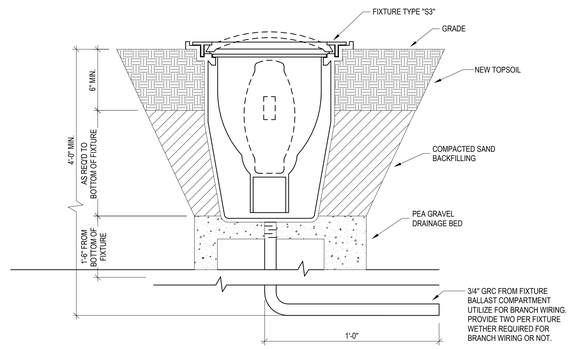

3 E-100 INGRADE OUTDOOR FLOODLIGHT - FIXTURE TYPE "S3"

SCALE: N.T.S.

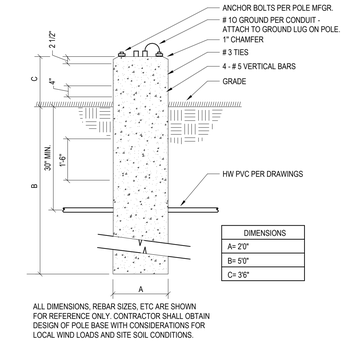

2 E-100 POLE BASE DETAIL - FIXTURE TYPES "S1" "S2"

SCALE: N.T.S.

LEGAT ARCHITECTS
Design with a Difference

Moline - Coal Valley School District

3600 Avenue of the Cities
Moline, IL 61265

ARCHITECT
Legat Architects, Inc.
1515 5th Ave. Ste 108
Moline, IL 61265
P: 309.517.5536
www.legat.com

CIVIL ENGINEER
RTM Engineering
5137 Utica Ridge Rd
Davenport,IA,52807
P: 563.726.6310
www.rtmec.com

STRUCTURAL ENGINEER
IMEG
626 26th Ave
Rock Island, IL, 61201
P: 309.788.0673
www.imegcorp.com

MEP/FP ENGINEER
RTM Engineering
5137 Utica Ridge Rd
Davenport, IA,52807
P: 563.726.6310
www.rtmec.com

BASEBALL & SOFTBALL COMPLEX RENOVATION

SIGNATURE _____

DATE _____

REVISIONS

NO.	DESCRIPTION	DATE
1	ADDENDUM 1	08/13/2026
2	ADDENDUM 2	08/17/2026

PROJECT NUMBER	226057.00
DATE OF ISSUE	08.04.2026
DRAWN BY	CM
REVIEWED BY	JV

ELECTRICAL SITE PLAN

E-100

ISSUED FOR BID

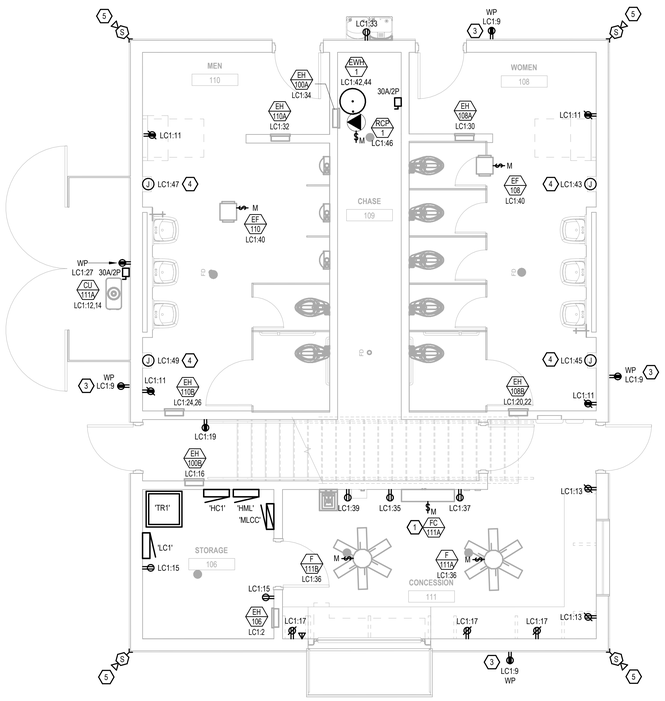

1 E-101 ELECTRIAL FIRST FLOOR PLAN - CONCESSION BUILDING

1/4" = 1'-0"

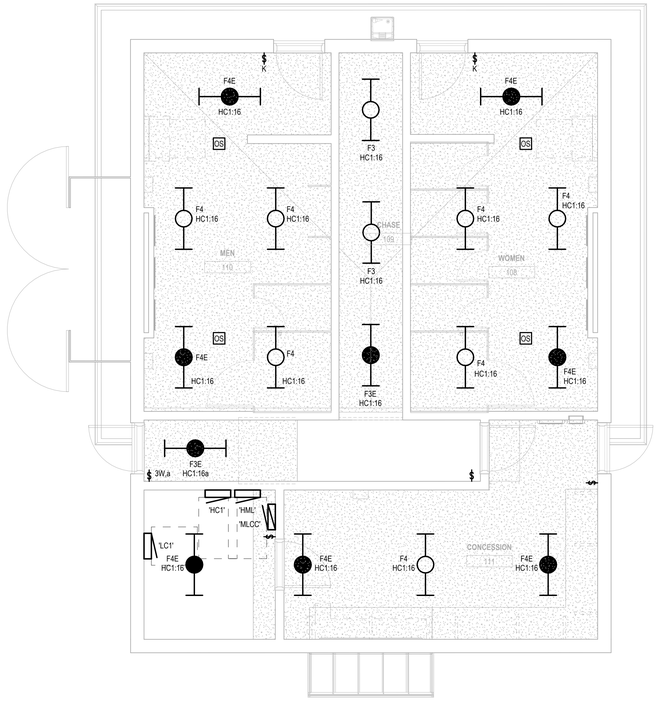

2 E-101 ELECTRICAL FIRST FLOOR LIGHTING PLAN - CONCESSION BUILDING

1/4" = 1'-0"

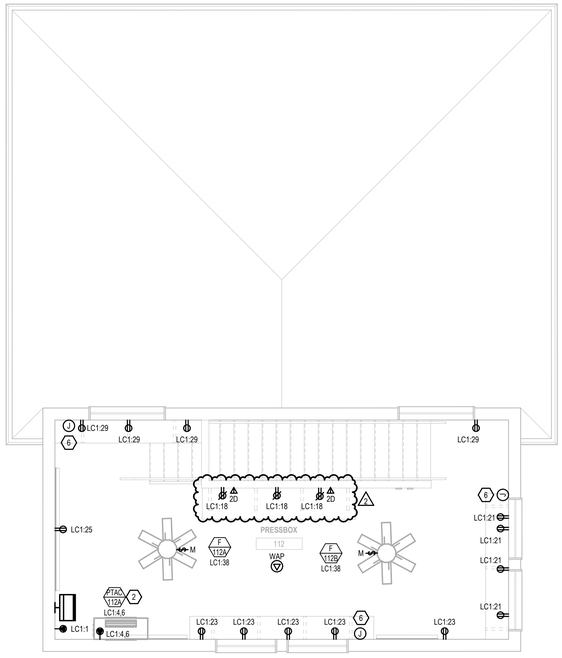

3 E-101 ELECTRICAL SECOND FLOOR PLAN - CONCESSION BUILDING

1/4" = 1'-0"

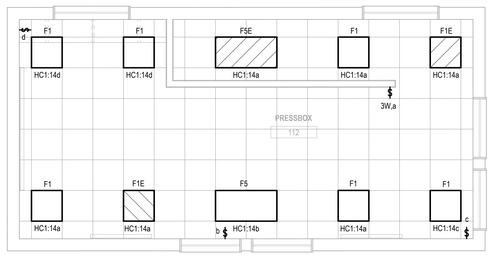

4 E-101 ELECTRICAL SECOND FLOOR LIGHTING PLAN - CONCESSIONS BUILDING

1/4" = 1'-0"

GENERAL NOTES:

1. REFER TO GENERAL NOTES AND SYMBOLS ON SHEET E-000.
2. REFER TO PROJECT MANUAL FOR PROJECT SPECIFICATIONS.
3. ALL DEVICES SHOWN ARE NEW UNLESS NOTED OTHERWISE.
4. PROVIDE ALL NECESSARY ROUGH-INS FOR SECURITY EQUIPMENT. COORDINATE ALL REQUIREMENTS WITH OWNER'S SECURITY VENDOR. VERIFY EXACT REQUIREMENTS WITH DOOR HARDWARE PROVIDERS AND OWNER.
5. SECURITY DEVICES (CAMERAS, CARD READERS, ETC.) ARE OWNER PROVIDED. COORDINATE REQUIREMENT WITH OWNER PRIOR TO ROUGH-IN.
6. COORDINATE FINAL SECURITY CAMERA LOCATION WITH OWNER PRIOR TO INSTALLATION.
7. INSTALL WALL MOUNTED OUTLETS 18" ABOVE FINISHED FLOOR UNLESS NOTED OTHERWISE
8. REFER TO ARCHITECTURAL PLANS FOR FINAL MOUNTING HEIGHTS AND FINAL FIXTURE LOCATIONS.
9. ALL WALL RECEPTACLES ARE RECESSED MOUNTED.
10. ALL RECEPTACLES TO BE TAMPER RESISTANT RECEPTACLES PER NEC 406.12.
11. COORDINATE ALL FINAL RECEPTACLE LOCATION WITH ARCHITECTURAL DRAWINGS, FINAL FURNITURE AND CASEWORK LAYOUTS, PRIOR TO ROUGH-IN.
12. PROVIDE DUAL DATA DROP FOR ALL WAP LOCATIONS.

#	KEYNOTES
1	INDOOR UNIT IS POWERED FROM ASSOCIATED OUTDOOR UNIT. PROVIDE NECESSARY CONNECTIONS BETWEEN THE TWO UNITS PER MANUFACTURER'S INSTALLATION DOCUMENTS.
2	PTAC POWERED FROM 6-30R NEMA OUTLET.
3	PROVIDE LOCKABLE OUTLET COVER FOR EXTERIOR RECEPTACLE.
4	EC TO PROVIDE POWER CONNECTION FOR ELECTRICAL HAND DRYERS. COORDINATE WITH MANUFACTURE FOR FINAL LOCATION AND ADDITIONAL REQUIREMENTS.
5	EC TO PROVIDE ROUGH-IN FOR SECURITY CAMERA. COORDINATE FINAL PLACEMENT WITH OWNER PRIOR TO ROUGH-IN.
6	PROVIDE 4" SQUARE BOX ABOVE COUNTER WITH CONDUIT TURNED OUT ABOVE CEILING FOR FUTURE USE. PROVIDE PULL STRING AND BLANK COVER PLATE OVER BOX.

LEGAT ARCHITECTS
Design with a Difference

Moline - Coal Valley School District

BASEBALL & SOFTBALL COMPLEX RENOVATION

3600 Avenue of the Cities
Moline, IL 61265

ARCHITECT
Legat Architects, Inc.
1515 5th Ave. Ste 108
Moline, IL 61265
P: 309.517.5536
www.legat.com

CIVIL ENGINEER
RTM Engineering
5137 Utica Ridge Rd
Davenport,IA,52807
P: 563.726.6310
www.rtmec.com

STRUCTURAL ENGINEER
IMEG
626 26th Ave
Rock Island, IL, 61201
P: 309.788.0673
www.imegcorp.com

MEP/FP ENGINEER
RTM Engineering
5137 Utica Ridge Rd
Davenport, IA,52807
P: 563.726.6310
www.rtmec.com

SIGNATURE

DATE

REVISIONS

NO.	DESCRIPTION	DATE
1	ADDENDUM 1	08/13/2026
2	ADDENDUM 2	08/17/2026

PROJECT NUMBER	226057.00
DATE OF ISSUE	08.04.2026
DRAWN BY	CM
REVIEWED BY	JV

ELECTRICAL PLANS - CONCESSIONS BUILDING

E-101

ISSUED FOR BID

GENERAL NOTES:

1. REFER TO GENERAL NOTES AND SYMBOLS ON SHEET E-000.
2. REFER TO PROJECT MANUAL FOR PROJECT SPECIFICATIONS.
3. REFER TO ELECTRICAL SITE PLAN SHEET E-100 FOR UNDERGROUND SITE WORK AND ADDITIONAL INFORMATION.

Branch Panel: LC1

Location: CONCESSION 111 — **Volts:** 120/208 Wye — **A.I.C. Rating:** 22,000
Supply From: TR1 — **Phases:** 3 — **Mains Type:** MCB
Mounting: Surface — **Wires:** 4 — **Bus Amps:** 400 A
Enclosure: Type 1 — **MCB Rating:** 400 A

CB Info	CKT	Circuit Description	Amps	Trip	Poles	A		B		C		Poles	Trip	Amps	Circuit Description	CKT	CB Info
	1	DATA RACK PRESSBOX	1.5 A	20 A	1	180 VA	1500 VA					1	20 A	12.5..	EH-106 STORAGE 106	2	
	3	POWER POLE JVBB	1.5 A	20 A	1			180 VA	3000 VA			2	30 A	28.8..	PTAC-112A, JVBB & SB PRESSBOX 112	4	
	5	POWER POLE JVSB	1.5 A	20 A	1					180 VA	3000 VA					6	
	7	POWER POLE VSB	1.5 A	20 A	1	180 VA	0 VA					2	30 A	--	SPARE	8	
	9	EXTERIOR BUILDING RECEPTACLES	6 A	20 A	1			720 VA	0 VA							10	
	11	RECEPTS. RESTROOMS	6 A	20 A	1					720 VA	1550 VA	2	20 A	14.9..	CU-111A	12	
	13	RECEPTS. NORTH CONCESSIONS	3 A	20 A	1	360 VA	1550 VA									14	
	15	RECEPTS. STORAGE 106	3 A	20 A	1			360 VA	1500 VA			1	20 A	12.5..	EH-104	16	
	17	RECEPTS. EAST CONCESSIONS	4.5 A	20 A	1					540 VA	540 VA	1	20 A	4.5 A	RECEPTACLES AC RM 112	18	
	19	RECEPTS. WEST CONCESSIONS	1.5 A	20 A	1	180 VA	1500 VA					2	20 A	14.4..	EH-108B, WOMEN 108	20	
	21	RECEPTS. JV SB PRESSBOX	6 A	20 A	1			720 VA	1500 VA							22	
	23	RECEPTS. V SB PRESSBOX	7.5 A	20 A	1					900 VA	1500 VA	2	20 A	14.4..	EH-110B, MEN 110	24	
	25	RECEPTS. V BB PRESSBOX	1.5 A	20 A	1	180 VA	1500 VA									26	
	27	EXTERIOR ROOFTOP RECEPTACLE	1.5 A	20 A	1			180 VA	0 VA			1	20 A	--	SPARE	28	
	29	RECEPTS. JV BB PRESSBOX	6 A	20 A	1					720 VA	1500 VA	1	20 A	12.5..	EH-108A WOMEN 108	30	
	31	SPARE	--	20 A	1	0 VA	1500 VA					1	20 A	12.5..	EH-110A MEN 110	32	
G	33	EXTERIOR WATER FOUNTAIN	7.5 A	20 A	1			900 VA	1500 VA			1	20 A	12.5..	EH-100A CHASE 109	34	
G	35	FREEZER CONCESSIONS 111	7.5 A	20 A	1					900 VA	149 VA	1	15 A	1.24..	F-111A, F-111B CONCESSIONS 111	36	
G	37	REFRIGERATOR CONCESSIONS 111	7.5 A	20 A	1	900 VA	149 VA					1	15 A	1.24..	F-112A, 112B PRESSBOX 112	38	
G	39	REFRIGERATOR CONCESSIONS 111	7.5 A	20 A	1			900 VA	60 VA			1	15 A	0.5 A	EF-108, 110	40	
	41	SPARE	--	20 A	1					0 VA	1500 VA	2	20 A	14.4..	EWH-1, CHASE 109	42	
L,G	43	HAND DRYER WOMEN 108	12.5..	20 A	1	1500 VA	1500 VA									44	
L,G	45	HAND DRYER WOMEN 108	12.5..	20 A	1			1500 VA	127 VA			1	15 A	1.06..	RCP-1, CHASE 109	46	
L,G	47	HAND DRYER MEN 110	12.5..	20 A	1					1500 VA	180 VA	1	20 A	1.5 A	EXT. JVSB DUGOUT	48	
L,G	49	HAND DRYER MEN 110	12.5..	20 A	1	1500 VA	180 VA					1	20 A	1.5 A	EXT. JVSB DUGOUT	50	
	51	EXT. INGRADE RECEPT. MOUND VSB	3 A	20 A	1			360 VA	180 VA			1	20 A	1.5 A	EXT. JVBB DUGOUT	52	
	53	EXT. INGRADE RECEPT. BATTING SB	1.5 A	20 A	1					180 VA	180 VA	1	20 A	1.5 A	EXT. JVBB DUGOUT	54	
	55	EXT. INGRADE RECEPT. BATTING SB	1.5 A	20 A	1	180 VA	1200 VA					1	20 A	1.5 A	EXT. INGRADE RECEPT. BATTING BB/SB	56	
	57	SPARE	--	20 A	1			0 VA	360 VA			1	20 A	3 A	RECEPTS. FANS VSB HOME DUGOUT	58	
	59	VSB SCOREBOARD	4.17..	20 A	1					500 VA	360 VA	1	20 A	3 A	RECEPTS. VSB HOME DUGOUT	60	
	61	JVSB SCOREBOARD	4.17..	20 A	1	500 VA	360 VA					1	20 A	3 A	RECEPTS. VSB HOME DUGOUT	62	
	63	JVBB SCOREBOARD	4.17..	20 A	1			500 VA	360 VA			1	20 A	3 A	RECEPTS. VSB HOME DUGOUT	64	
	65	RECEPTS. VSB AWAY DUGOUT	3 A	20 A	1					360 VA	540 VA	1	20 A	4.5 A	RECEPTS. VSB HOME DUGOUT	66	
	67					2000 VA	2000 VA									68	
	69	IH-1, VSB AWAY DUGOUT	19.2..	25 A	2			2000 VA	2000 VA			2	25 A	19.2..	IH-1, VSB HOME DUGOUT	70	
	71	GRINDER PUMP	12 A	20 A	1					1440 VA	2000 VA	2	25 A	19.2..	IH-1, VSB HOME DUGOUT	72	
	73	SPARE	--	20 A	1	0 VA	2000 VA									74	
	75	SPARE	--	20 A	1			0 VA	0 VA			1	20 A	--	SPARE	76	
	77	SPARE	--	20 A	1					0 VA	0 VA	1	20 A	--	SPARE	78	
	79	SPARE	--	20 A	1	0 VA	0 VA					1	20 A	--	SPARE	80	
	81	SPARE	--	20 A	1			0 VA	0 VA			1	20 A	--	SPARE	82	
	83	SPARE	--	20 A	1					0 VA	0 VA	1	20 A	--	SPARE	84	
					Total Load:	22599 VA		18881 VA		20939 VA							
					Tot...	191 A		157 A		177 A							

CIRCUIT BREAKER INFORMATION LEGEND:
G = GROUND FAULT SENSING
S = SHUNT TRIP
L = LOCK OUT
A = ARC FAULT INTERRUPTER

ABBREVIATIONS:
MCB = MAIN CIRCUIT BREAKER
CB = CIRCUIT BREAKER
CKT = CIRCUIT

Load Classification	Connected Load	Demand Factor	Estimated Demand	Panel Totals	
Equipment	127 VA	100.00%	127 VA		
HVAC	25660 VA	100.00%	25660 VA	Total Conn. Load:	62419 VA
Other	12298 VA	100.00%	12298 VA	Total Est. Demand:	62419 VA
Power	24360 VA	100.00%	24360 VA	Total Conn.:	173 A
Lighting	0 VA	0.00%	0 VA	Total Est. Demand:	173 A

Notes:
EC TO PROVIDE NEW BRANCH PANEL INDENTIFICATION LABEL AND NEW PANEL SCHEDULE CARD.

Branch Panel: LC2

Location: STAIRS 103 — **Volts:** 120/208 Wye — **A.I.C. Rating:** 22,000
Supply From: TR2 — **Phases:** 3 — **Mains Type:** MCB
Mounting: Surface — **Wires:** 4 — **Bus Amps:** 225 A
Enclosure: NEMA 1 — **MCB Rating:** 175 A

CB Info	CKT	Circuit Description	Amps	Trip	Poles	A		B		C		Poles	Trip	Amps	Circuit Description	CKT	CB Info
	1	DATA RACK	1.5 A	20 A	1	180 VA	3000 VA					2	30 A	28.8..	PTAC 105, VBB PRESSBOX 105	2	
	3	LIGHTING V BB 1ST FLOOR	1.2 A	20 A	1			144 VA	3000 VA							4	
	5	LIGHTING V BB 2ND FLOOR	2.04..	20 A	1					244 VA	3000 VA	2	30 A	28.8..	PTAC 104, CONCESSION 104	6	
	7	EXTERIOR BUILDING RECEPTS.	6 A	20 A	1	720 VA	3000 VA									8	
	9	RECEPTS. RESTROOM, STORAGE	1.5 A	20 A	1			180 VA	1500 VA			1	20 A	12.5..	EH-104	10	
	11	RECEPTS.CONCESSION 104	4.5 A	20 A	1					540 VA	149 VA	1	15 A	1.24..	F-104, 105 VBB CONCESSIONS	12	
	13	RECEPTS.CONCESSION 104	4.5 A	20 A	1	540 VA	180 VA					1	20 A	1.5 A	REFRIGERATOR CONCESSION 104	14	G
	15	RECEPTS. UNDER COUNTER PB	4.5 A	20 A	1			540 VA	180 VA			1	20 A	1.5 A	FREEZER CONCESSION 104	16	G
	17	RECEPTS. ABOVE COUNTER PB	4.5 A	20 A	1					540 VA	360 VA	1	20 A	3 A	LIGHTING V. BASEBALL HOME DUGOUT	18	
	19	RECEPTS. PRESSBOX	4.5 A	20 A	1	540 VA	360 VA					1	20 A	3 A	RECEPTS. FANS VBB HOME DUGOUT	20	
	21	EXT. INGRADE RECEPT. MOUND VBB	3 A	20 A	1			360 VA	360 VA			1	20 A	3 A	RECEPTS. VBB HOME DUGOUT	22	
	23	EXT. VBB SCOREBOARDS	8.33..	20 A	1					1000 VA	360 VA	1	20 A	3 A	RECEPTS. VBB HOME DUGOUT	24	
	25	POWER POLE VBB	1.5 A	20 A	1	180 VA	540 VA					1	20 A	4.5 A	RECEPTS. VBB HOME DUGOUT	26	
	27	LIGHTING V BB AWAY DUGOUT	0.8 A	20 A	1			96 VA	360 VA			1	20 A	3 A	RECEPTS. VBB HOME DUGOUT	28	
	29					2000 VA	2000 VA			2000 VA	2000 VA					30	
	31	IH-1, VBB AWAY DUGOUT	19.2..	25 A	2			360 VA	2000 VA			2	25 A	19.2..	IH-1, VBB HOME DUGOUT	32	
	33	RECEPTS. V BB AWAY DUGOUT	3 A	20 A	1					0 VA	2000 VA					34	
	35	SPARE	--	20 A	1	0 VA	0 VA					1	20 A	--	SPARE	36	
	37	SPARE	--	20 A	1			0 VA	0 VA			1	20 A	--	SPARE	38	
	39	SPARE	--	20 A	1					0 VA	0 VA	1	20 A	--	SPARE	40	
	41	SPARE	--	20 A	1							1	20 A	--	SPARE	42	
					Total Load:	13240 VA		9080 VA		12193 VA							
					Tot...	114 A		76 A		106 A							

CIRCUIT BREAKER INFORMATION LEGEND:
G = GROUND FAULT SENSING
S = SHUNT TRIP
L = LOCK OUT
A = ARC FAULT INTERRUPTER

ABBREVIATIONS:
MCB = MAIN CIRCUIT BREAKER
CB = CIRCUIT BREAKER
CKT = CIRCUIT

Load Classification	Connected Load	Demand Factor	Estimated Demand	Panel Totals	
HVAC	13500 VA	100.00%	13500 VA		
Other	12149 VA	100.00%	12149 VA	Total Conn. Load:	34513 VA
Power	8020 VA	100.00%	8020 VA	Total Est. Demand:	34513 VA
Lighting	844 VA	100.00%	844 VA	Total Conn.:	96 A
				Total Est. Demand:	96 A

Notes:
EC TO PROVIDE NEW BRANCH PANEL INDENTIFICATION LABEL AND NEW PANEL SCHEDULE CARD.

Branch Panel: HC1

Location: CONCESSION 111 — **Volts:** 480/277 Wye — **A.I.C. Rating:** 42000
Supply From: — **Phases:** 3 — **Mains Type:** MCB
Mounting: Surface — **Wires:** 4 — **Bus Amps:** 400 A
Enclosure: Type 1 — **MCB Rating:** 400 A

CB Info	CKT	Circuit Description	Amps	Trip	Poles	A		B		C		Poles	Trip	Amps	Circuit Description	CKT	CB Info
	1					22599 VA	13240...									2	
	3	TR1	75.08 A	175 A	3			18881...	9080 VA			3	70 A	41.51 A	TR2	4	
	5									20939...	12193 VA					6	
	7					40320 VA	--					1	--	--	SPACE	8	
	9	HML	145.4 9 A	200 A	3			40320...	--			1	--	--	SPACE	10	
	11									40320...	--	1	--	--	SPACE	12	
	13	MLCC	3.61..	20 A	1	1000 VA	364 VA					1	20 A	1.31..	LIGHTING CONCESSIONS PRESSBOX	14	
	15	EXTERIOR LIGHTING PARKING LOT	2.41..	20 A	1			668 VA	432 VA			1	20 A	1.56..	LIGHTING CONCESSIONS 1ST FLOOR	16	
	17	EXTERIOR FLAG FLOODLIGHTS	0.76..	20 A	1					210 VA	360 VA	1	20 A	1.3 A	LTG. V. SOFTBALL HOME DUGOUT	18	
	19	EXTERIOR LIGHTING ENTRY GATE	1.01..	20 A	1	279 VA	96 VA					1	20 A	0.35..	LTG. V. SOFTBALL AWAY DUGOUT	20	
	21	SPARE	--	20 A	1			0 VA	0 VA			1	20 A	--	SPARE	22	
	23	SPARE	--	20 A	1					0 VA	0 VA	1	20 A	--	SPARE	24	
					Total Load:	77898 VA		69381 VA		74022 VA							
					Tot...	284 A		250 A		270 A							

CIRCUIT BREAKER INFORMATION LEGEND:
G = GROUND FAULT SENSING
S = SHUNT TRIP
L = LOCK OUT
A = ARC FAULT INTERRUPTER

ABBREVIATIONS:
MCB = MAIN CIRCUIT BREAKER
CB = CIRCUIT BREAKER
CKT = CIRCUIT

Load Classification	Connected Load	Demand Factor	Estimated Demand	Panel Totals	
Equipment	127 VA	100.00%	127 VA		
HVAC	39160 VA	100.00%	39160 VA	Total Conn. Load:	221302 VA
Other	25447 VA	100.00%	25447 VA	Total Est. Demand:	221302 VA
Power	32380 VA	100.00%	32380 VA	Total Conn.:	266 A
Lighting	124213 VA	100.00%	124213 VA	Total Est. Demand:	266 A

Notes:
EC TO PROVIDE NEW BRANCH PANEL INDENTIFICATION LABEL AND NEW PANEL SCHEDULE CARD.

Branch Panel: HML

Location: CONCESSION 111 — **Volts:** 480/277 Wye — **A.I.C. Rating:** 42000
Supply From: HC1 — **Phases:** 3 — **Mains Type:** MLO
Mounting: Surface — **Wires:** 4 — **Bus Amps:** 200 A
Enclosure: Type 1

CB Info	CKT	Circuit Description	Amps	Trip	Poles	A		B		C		Poles	Trip	Amps	Circuit Description	CKT	CB Info
	1					1750 VA	1557 VA									2	
	3	VARSITY BASEBALL FIELD W POLE (A1)	6.31 A	20 A	3			1750 VA	1557 VA			3	20 A	5.62 A	FUTURE JV SOFTBALL FIELD W POLE (B4)	4	
	5									1750 VA	1557 VA					6	
	7					3010 VA	1553 VA									8	
	9	VARSITY BASEBALL FIELD W POLE (B1)	10.86 A	20 A	3			3010 VA	1553 VA			3	20 A	5.61 A	FUTURE JV SOFTBALL FIELD NE POLE (C4)	10	
	11									3010 VA	1553 VA					12	
	13					2263 VA	1070 VA									14	
	15	VARSITY BASEBALL FIELD N POLE (C1)	8.17 A	20 A	3			2263 VA	1070 VA			3	20 A	3.86 A	FUTURE JV SOFTBALL FIELD W POLE (A5)	16	
	17									2263 VA	1070 VA					18	
	19					1750 VA	2540 VA									20	
	21	VARSITY BASEBALL FIELD S POLE (A2)	6.31 A	20 A	3			1750 VA	2540 VA			3	20 A	9.17 A	FUTURE JV BASEBALL FIELD S POLE (B5)	22	
	23									1750 VA	2540 VA					24	
	25					3010 VA	2333 VA									26	
	27	VARSITY BASEBALL FIELD S POLE (B2)	10.86 A	20 A	3			3010 VA	2333 VA			3	20 A	8.42 A	FUTURE JV BASEBALL FIELD W POLE (C5)	28	
	29									3010 VA	2333 VA					30	
	31	VARSITY BASEBALL FIELD E POLE (C2)	14.13 A	25 A	3	3917 VA	1360 VA					3	20 A	4.91 A	FUTURE JV BASEBALL FIELD E POLE (A6)	32	
	33	VARSITY SOFTBALL FIELD W POLE (C2)						3917 VA	1360 VA							34	
	35									3917 VA	1360 VA					36	
	37	VARSITY SOFTBALL FIELD N POLE (A3)	7.72 A	20 A	3	2140 VA	2540 VA					3	20 A	9.17 A	FUTURE JV BASEBALL FIELD E POLE (B6)	38	
	39	JV SOFTBALL FIELD S POLE (A3)						2140 VA	2540 VA							40	
	41									2140 VA	2540 VA					42	
	43					3210...	2333...									44	
	45	VARSITY SOFTBALL FIELD N POLE (B3)	11.58 A	20 A	3			3210...	2333...			3	20 A	8.42 A	FUTURE JV BASEBALL FIELD N POLE (C6)	46	
	47	JV SOFTBALL FIELD S POLE (B3)								3210 VA	2333 VA					48	
	49					1553...	1360...									50	
	51	VARSITY SOFTBALL FIELD SE POLE (C3)	5.61 A	20 A	3			1553...	1360...			3	20 A	4.91 A	FUTURE JV BASEBALL FIELD S POLE (A7)	52	
	53									1553 VA	1360 VA					54	
	55					1070...	0 VA									56	
	57	VARSITY SOFTBALL FIELD W POLE (A4)	3.86 A	20 A	3			1070...	0 VA			3	20 A	--	SPARE	58	
	59									1070 VA	0 VA					60	
					Total Load:	40320 VA		40320 VA		40320 VA							
					Total Amps:	146 A		146 A		146 A							

CIRCUIT BREAKER INFORMATION LEGEND:
G = GROUND FAULT SENSING
S = SHUNT TRIP
L = LOCK OUT
A = ARC FAULT INTERRUPTER

ABBREVIATIONS:
MLO = MAIN LUGS ONLY
CB = CIRCUIT BREAKER
CKT = CIRCUIT

Load Classification	Connected Load	Demand Factor	Estimated Demand	Panel Totals	
Lighting	120960 VA	100.00%	120960 VA	Total Conn. Load:	120960 VA
				Total Est. Demand:	120960 VA
				Total Conn.:	145 A
				Total Est. Demand:	145 A

Notes:
EC TO PROVIDE NEW BRANCH PANEL INDENTIFICATION LABEL AND NEW PANEL SCHEDULE CARD.

LEGAT ARCHITECTS
Design with a Difference

Moline - Coal Valley School District

BASEBALL & SOFTBALL COMPLEX RENOVATION

3600 Avenue of the Cities
Moline, IL 61265

ARCHITECT
Legat Architects, Inc.
1515 5th Ave. Ste 108
Moline, IL 61265
P: 309.517.5536
www.legat.com

CIVIL ENGINEER
RTM Engineering
5137 Utica Ridge Rd
Davenport,IA,52807
P: 563.726.6310
www.rtmec.com

STRUCTURAL ENGINEER
IMEG
626 26th Ave
Rock Island, IL, 61201
P: 309.788.0673
www.imegcorp.com

MEP/FP ENGINEER
RTM Engineering
5137 Utica Ridge Rd
Davenport, IA,52807
P: 563.726.6310
www.rtmec.com

SIGNATURE _____

DATE _____

REVISIONS

NO.	DESCRIPTION	DATE
1	ADDENDUM 1	08/13/2026
2	ADDENDUM 2	08/17/2026

PROJECT NUMBER	226057.00
DATE OF ISSUE	08.04.2026
DRAWN BY	CM
REVIEWED BY	JV

ELECTRICAL PANEL SCHEDULES

E-201

ISSUED FOR BID