IDENTIFICATION STAMP
DIV. OF THE STATE ARCHITECT
APP: 02-123848 INC: 01
REVIEWED FOR
SS ☑ FLS ☑ ACS ☑
DATE: 05/21/2026

DSA APPLICATION NUMBER: # 02-123848

ELKHORN ELEMENTARY SCHOOL CAMPUS MODERNIZATION INCREMENT 1

10505 DAVIS ROAD, STOCKTON, CA 95209

PROJECT NUMBER
31942

Submittals	Date
100% SCHEMATIC DESIGN	08/29/2025
DSA SUBMITTAL	12/18/2025

LPA
ARCHITECTURE ENGINEERING INTERIORS
LANDSCAPE ARCHITECTURE PLANNING

916-287-2400 Office
916-287-2401 Fax
LPADesignStudios.com
431 I Street,
Suite 107
Sacramento, California 95814

LICENSED ARCHITECT
JULIAN WATT
C-40596
17 DEC 2027
RENEWAL DATE
STATE OF CALIFORNIA

COVER SHEET

1G0.00

SHEET INDEX

SHEET NUMBER	SHEET NAME
GENERAL	
1G0.00	COVER SHEET
1G0.01	SHEET LIST
1G0.02	GENERAL PROJECT INFORMATION
1G1.01	SITE PLAN
1G1.02	FIRE ACCESS SITE PLAN
1G1.03	SITE ACCESSIBILITY PLAN
CIVIL	
1C0.01	CIVIL NOTES
1C0.02	KEY MAP
1C0.03	EXISTING CONDITIONS
1C0.04	EXISTING CONDITIONS
1C1.01	DEMOLITION PLAN
1C1.02	DEMOLITION PLAN
1C1.03A	DEMOLITION PLAN ADD ALTERNATIVE 5
1C2.01	GRADING PLAN
1C2.02	GRADING PLAN
1C2.03	GRADING PLAN
1C2.04	GRADING PLAN
1C2.05	GRADING PLAN
1C2.06A	GRADING PLAN ADD ALTERNATIVE 5
1C3.01	STORM DRAIN PLAN
1C3.02A	STORM DRAIN PLAN ADD ALTERNATIVE 5
1C4.01	UTILITY PLAN
1C5.01	HORIZONTAL CONTROL, PAVING, SIGNAGE AND STRIPING PLAN
1C6.01	EROSION CONTROL PLAN
1C6.02	EROSION CONTROL PLAN
1C7.01	DETAILS
1C7.02	DETAILS
LANDSCAPE	
1L0.01	LANDSCAPE NOTES AND LEGENDS
1L1.01	MATERIALS PLAN
1L2.01	LAYOUT PLAN
1L3.01	ENLARGEMENT PLAN
1L4.01	SITE SECTIONS AND ELEVATIONS
1L5.01	CONSTRUCTION DETAILS
1L5.02	CONSTRUCTION DETAILS
1L5.03	CONSTRUCTION DETAILS
1L5.04	CONSTRUCTION DETAILS
1L5.05	CONSTRUCTION DETAILS
1L6.01	IRRIGATION PLAN
1L6.02	IRRIGATION NOTES AND LEGEND
1L6.03	IRRIGATION DETAILS
1L6.04	IRRIGATION DETAILS
1L6.05	IRRIGATION DETAILS
1L6.06	WATER USAGE CALCULATIONS
1L7.01	PLANTING PLAN
1L7.02	PLANTING DETAILS
ARCHITECTURE	
1A0.01	SITE PLAN
ELECTRICAL	
1E0.01	ELECTRICAL LEGENDS
1E0.02	ELECTRICAL GENERAL NOTES
1E1.01	EXISTING ELECTRICAL SITE PLAN
1E1.02	REMODEL ELECTRICAL SITE PLAN
1E1.11	LIGHTING SITE PLAN
1E4.01	ENLARGED ELECTRICAL SITE PLAN
1E5.01	ELECTRICAL SINGLE LINE DIAGRAM
1E7.01	ELECTRICAL DETAILS
1E7.10	LIGHTING DETAIL
1E8.01	ENERGY COMPLIANCE FORMS
1E8.02	ENERGY COMPLIANCE FORMS
1E9.11	PHOTOMETRIC SITE PLAN
FIRE ALARM	
1FA0.20	FIRE ALARM SITE PLAN
TECHNOLOGY	
1T0.01	TECHNOLOGY NOTES
1T0.02	TECHNOLOGY SYMBOL LEGEND
1T0.20	TECHNOLOGY SITE PLAN
1TB.01	TECHNOLOGY BACKBONE PATHWAYS DETAILS
PRE-CHECK SHADE CANOPY	
1PC1.00	GENERAL INFO
1PC1.10	GENERAL INFO
1PC1.20	DSA 103
1PC1.30	DSA 103
1PC3.00	FOUNDATION PLAN
1PC3.10	FRAMING & CONNECTION DETAILS
1PC3.40	ROOFING PLAN
1PC5.00	OPTIONAL ELECTRICAL ACCESS
Grand total: 71	

IDENTIFICATION STAMP
DIV. OF THE STATE ARCHITECT
APP: 02-123848 INC: 01
REVIEWED FOR
SS ☑ FLS ☑ ACS ☑
DATE: 05/21/2026

LPA

ARCHITECTURE ENGINEERING INTERIOR DESIGN
LANDSCAPE ARCHITECTURE PLANNING

916-287-2400 Office

LPADesignStudios.com

431 I Street, Suite 107
Sacramento, California 95814

LICENSED ARCHITECT
JULIAN WATT
C-40596
17 DEC 2027
RENEWAL DATE
STATE OF CALIFORNIA

This document and all other project documents, ideas, aesthetics and designs incorporated therein are instruments of service. All project documents are copyright protected, are the property of LPA, Inc. (LPA) and cannot be lawfully used in whole or in part for any project or purpose except as set forth in the contractual agreement between LPA and its Client. The unauthorized disclosure and/or use of the project documents (including the creation of derivative works), may give rise to liability for copyright infringement, unlawful disclosure, use or misappropriation of property rights held by LPA. The unauthorized use of the project documents will give rise to the recovery of monetary losses and damages including attorney fees and costs for which the unauthorized user will be held liable.
Project documents describe the design intent of the work and are not a representation of as-built or existing conditions. LPA is not responsible for any discrepancies between the project documents and the existing conditions.

© LPA, Inc.

ELKHORN ELEMENTARY SCHOOL
CAMPUS MODERNIZATION INCREMENT 1

10505 DAVIS ROAD, STOCKTON, CA
95209

Developed for
LODI UNIFIED SCHOOL DISTRICT

Revision	Date

Submittal	Date
100% SCHEMATIC DESIGN	08/28/2025
DSA SUBMITTAL	12/18/2025

Job Number	31942
Checked By	Checker
Scale	

SHEET LIST

1G0.01

SYMBOLS

COLUMN LINES

SURFACE DRAINAGE ARROW INDICATES DIRECTION OF FLOW

NORTH ARROW — TRUE NORTH, PROJECT NORTH

BUILDING SECTION
SECTION ID
SHEET NUMBER

WALL SECTION
SECTION ID
SHEET NUMBER

DETAIL CALLOUTS
DETAIL ID
SHEET NUMBER

DETAIL SECTION
DETAIL ID
SHEET NUMBER

DETAIL REFERENCE
DETAIL ID
SHEET NUMBER

INTERIOR ELEVATIONS
DETAIL ID
SHEET NUMBER

ROOM DESIGNATION
ROOM NUMBER
ROOM AREA

REVISION CLOUD & TAG (OPTIONAL)

SHADED PORTION POINTS TO SIDE REFERENCED — MATCH LINE, SEE SHEET A101

DATUM POINT

KEYNOTE

WALL TYPE

DOOR DESIGNATION

OPENING DESIGNATION

EQUIPMENT TAG

FINISH TAG

LEVEL LINE, CONTROL POINT
EL: 12'-8" = ELEVATION/SECTION

STAIR DIRECTION

CENTER LINES, LEVEL LINES

HIDDEN CONSTRUCTION FEATURE

BREAK LINE

EXTERIOR ASSEMBLY
REFER TO A8.11

ADA CONSTRUCTION SUPPORT FACILITIES

ACCESSIBLE CONSTRUCTION SUPPORT FACILITIES

11B-201.4 CONSTRUCTION SUPPORT FACILITIES. These requirements shall apply to temporary or permanent construction support facilities for uses and activities not directly associated with the actual processes of construction, including but not limited to offices, meeting rooms, plan rooms, other administrative or support functions. When provided, toilet and bathing facilities serving construction support facilities shall comply with 11B-213. When toilet and bathing facilities serving construction support facilities are provided by portable units, at least one of each type shall be accessible and connected to the construction support facilities it serves by an accessible route.

EXCEPTION: During construction an accessible route shall not be required between site arrival points or the boundary of the area of construction and the entrance to the construction support facilities if the only means of access between them is a vehicular way not providing pedestrian access.

ABBREVIATIONS

&	AND
∠	ANGLE
@	AT
℄	CENTERLINE
Ø	DIAMETER OR ROUND
#	POUND OR NUMBER
(E)	EXISTING
(P)	PAINT
(R)	REMOVE
+/-	DIM TOLERANCE
AC	ASPHALTIC CONCRETE
ACC	ACCESSIBLE
ACOUS	ACOUSTICAL
ACM	ALUM COMPOSITE MATERIAL
ACT	ACOUS CLG TILE
AD	AREA DRAIN
AED	AUTO EXT DEFIBRILLATOR
ADJ	ADJUSTABLE
AFF	ABOVE FINISH FLOOR
AGGR	AGGREGATE
AHJ	AUTHORITY HAVING JURISDICTION
ALUM	ALUMINUM
APPROX	APPROXIMATE
ARCH	ARCHITECTURAL
ASF	ASSIGNABLE SF
ASPH	ASPHALT
BD	BOARD
BITUM	BITUMINOUS
BLDG	BUILDING
BLK	BLOCK
BLK'G	BLOCKING
BM	BEAM
BOC	BACK OF CURB
BOT	BOTTOM
BO	BOTTOM OF
BOC	BACK OF CURB
BOW	BOTTOM OF WALL
BS	BOTTOM OF SLOPE
CAB	CABINET
CB	CATCH BASIN
CEM	CEMENT
CER	CERAMIC
CI	CAST IRON
CIP	CAST IN PLACE
CIV ENG	CIVIL ENGINEER
CG	CORNER GUARD
CJ	CONTROL JOINT
CLG	CEILING
CLKG	CAULKING
CLO	CLOSET
CLR	CLEAR
CNTR	COUNTER
CO	CASED OPENING
COL	COLUMN
CONC	CONCRETE
CONN	CONNECTION
CONSTR	CONSTRUCTION
CONT	CONTINUOUS
CORR	CORRIDOR
CT	CERAMIC TILE
CTR	CENTER
CTSK	COUNTERSUNK
DA	DISABLED ACCESS
DBL	DOUBLE
DEPT.	DEPARTMENT
DESC	DESCRIPTION
DF	DRINKING FOUNTAIN
DET	DETAIL
DIA	DIAMETER
DIM	DIMENSION
DISP	DISPENSER
DN	DOWN
DO	DOOR OPENING
DR	DOOR
DWR	DRAWER
DS	DOWNSPOUT
DSP	DRY STANDPIPE
DWG	DRAWING
E	EAST
EA	EACH
EJ	EXPANSION JOINT
EL	ELEVATION
ELEC	ELECTRICAL
ELEV	ELEVATOR
EMER	EMERGENCY
ENCL	ENCLOSURE
EP	ELECTRICAL PANELBOARD
EQ	EQUAL
EQUIP	EQUIPMENT
EWC	ELECTRIC WATER COOLER
EXIST	EXISTING
EXPO	EXPOSED
EXP	EXPANSION
EXT	EXTERIOR
FA	FIRE ALARM
FB	FLAT BAR
FD	FLOOR DRAIN
FDN	FOUNDATION
FE	FIRE EXTINGUISHER
FEC	FIRE EXTINGUISHER CABINET
FHC	FIRE HOSE CABINET
FIN	FINISH
FLR	FLOOR
FLASH	FLASHING
FLUOR	FLUORESCENT
FOC	FACE OF CONCRETE
FOF	FACE OF FINISH
FOM	FACE OF MASONRY
FOS	FACE OF STUD
FOV	FACE OF VENEER (BRICK OR PRECAST)
FOW	FACE OF WALL
FR	FIRE RETARDANT
FPRF	FIREPROOF
FS	FINISH SURFACE
FT	FOOT OR FEET
FTG	FOOTING
FURR	FURRING
FUT	FUTURE
GA	GAUGE
GALV	GALVANIZED
GB	GRAB BAR
GC	GENERAL CONTRACTOR
GI	GALVANIZED IRON
GL	GLASS
GND	GROUND
GR	GRADE
GYP	GYPSUM
HB	HOSE BIB
HC	HOLLOW CORE
HDWD	HARDWOOD
HDW	HARDWARE
HM	HOLLOW METAL
HORIZ	HORIZONTAL
HR	HOUR
HGT/HT	HEIGHT
ID	INSIDE DIAMETER
INSUL	INSULATION
INT	INTERIOR
JAN	JANITOR
JT	JOINT
KIT	KITCHEN
LAB	LABORATORY
LAM	LAMINATE
LAND ARCH	LANDSCAPE ARCHITECT
LAV	LAVATORY
LKR	LOCKER
LT	LIGHT
MATL	MATERIAL
MAX	MAXIMUM
MC	MEDICINE CABINET
MECH	MECHANICAL
MEMB	MEMBRANE
MET	METAL
MFR	MANUFACTURER
MH	MANHOLE
MIN	MINIMUM
MIR	MIRROR
MISC	MISCELLANEOUS
MO	MASONRY OPENING
MTD	MOUNTED
MUL	MULLION
N	NORTH
NIC	NOT IN CONTRACT
NO/#	NUMBER
NOM	NOMINAL
NTS	NOT TO SCALE
OA	OVERALL
OA	OUTSIDE AIR
OBS	OBSCURE
OC	ON CENTER
OD	OUTSIDE DIAMETER
OFF	OFFICE
OPNG	OPENING
OPP	OPPOSITE
OSA	OUTSIDE AIR
PA	PLANTING AREA
PRCST	PRECAST
PH	PANIC HARDWARE
PL	PLATE
P LAM	PLASTIC LAMINATE
PLAS	PLASTER
PLYWD	PLYWOOD
POT	PATH OF TRAVEL
PR	PAIR
PT	PAINT
PTD	PAPER TOWEL DISPENSER
PTD/R	COMBINATION PAPER TOWEL DISPENSER & RECEPTACLE
PTN	PARTITION
PTR	PAPER TOWEL RECEPTACLE
QT	QUARRY TILE
R	RISER
RAD	RADIUS
RD	ROOF DRAIN
REF	REFERENCE
REFR	REFRIGERATOR
RGTR	REGISTER
REINF	REINFORCED
REQD	REQUIRED
RESIL	RESILIENT
RM	ROOM
RO	ROUGH OPENING
ROW	RIGHT OF WAY
RWD	REDWOOD
RWL	RAIN WATER LEADER
S	SOUTH
SC	SOLID CORE
SCD	SEAT COVER DISPENSER
SCHED	SCHEDULE
SD	SOAP DISPENSER
SECT	SECTION
SF	SQUARE FEET
SH	SHELF
SHR	SHOWER
SHT	SHEET
SIM	SIMILAR
SND	SANITARY NAPKIN DISPENSER
SNR	SANITARY NAPKIN RECEPTACLE
SPEC	SPECIFICATION(S)
SQ	SQUARE
SS	STAINLESS STEEL
S SK	SERVICE SINK
STA	STATION
STD	STANDARD
STL	STEEL
STOR	STORAGE
STR	STRUCTURAL
SUSP	SUSPENDED
SYM	SYMMETRICAL
T	TREAD
TB	TOWEL BAR
TC	TOP OF CURB
TEL	TELEPHONE
TER	TERRAZZO
T&G	TONGUE & GROOVE
THK	THICK
TOB	TOP OF BEAM
TOC	TOP OF CONCRETE
TOW	TOP OF WALL
TOP	TOP OF PARAPET
TPD	TOILET PAPER DISPENSER
TS	TOP OF SLOPE
TV	TELEVISION
TYP	TYPICAL
UNF	UNFINISHED
UNO	UNLESS NOTED OTHERWISE
UR	URINAL
VCT	VINYL COMPOSITION TILE
VERT	VERTICAL
VEST	VESTIBULE
W	WEST
W/	WITH
WC	WATER CLOSET
WD	WOOD
W/O	WITHOUT
WP	WATERPROOF
WR	WATER RESISTANT
WSCT	WAINSCOT
WT	WEIGHT
WWF	WELDED WIRE FABRIC

CALIFORNIA ENERGY CODE NOTES

The California Energy Code Section 10-103 requires Acceptance Testing on all newly installed lighting controls, mechanical systems, envelopes, and process equipment after installation and before project completion. An Acceptance Test is a functional performance test to help ensure that newly installed equipment is operating and in compliance with the Energy Code.

Lighting controls acceptance tests must be performed by a certified lighting controls Acceptance Test Technician (ATT).

Mechanical system acceptance tests must be performed by a certified mechanical ATT for projects submitted on or after October 1, 2021.

Envelope and process equipment acceptance tests shall be performed by the installing contractor, engineer/architect of record or the owner's agent.

A listing of certified ATT can be found at: https://www.energy.ca.gov/programs-and-topics/programs/acceptance-test-technician-certification-provider-program/acceptance.

The Acceptance Testing procedures must be repeated, and deficiencies must be corrected by the builder or installing contractor until the construction/installation of the specified systems conform and pass the required acceptance criteria.

Project inspectors will collect the forms to confirm that the required Acceptance Tests have been completed.

CONSTRUCTION NOTES

1. ALL CONSTRUCTION & MATERIALS SHALL BE AS SPECIFIED & IN ACCORDANCE WITH ALL APPLICABLE CODES, ORDINANCES, LAWS, PERMITS & THE CONTRACT DOCUMENTS.
2. THE CONTRACTOR SHALL BE RESPONSIBLE FOR THE ACCURATE PLACEMENT OF ALL NEW CONSTRUCTION ON THE SITE.
3. THE CONTRACTOR IS RESPONSIBLE FOR ALL EXG SURVEY MONUMENTS WHICH MAY BE DISTURBED THROUGH CONSTRUCTION ACTIVITIES DEEMED NECESSARY FOR PRESERVATION BY THE CIVIL ENGINEER. IF SUCH MONUMENTS WERE DISTURBED, THE APPLICANT SHALL HAVE A LICENSED LAND SURVEYOR QUALIFIED CIVIL ENGINEER REESTABLISH ANY SUCH MONUMENTATION DAMAGED OR DESTROYED DURING THE CONSTRUCTION OF THE PROJECT & SUBMIT "PRELIMINARY CORNER RECORDS" TO THE CIVIL ENGINEER AFTER REPLACEMENT. AFTER APPROVAL BY THE CIVIL ENGINEER, THE APPLICANT SHALL FILE THE CORNER RECORDS WITH THE COUNTY SURVEYOR. PRIOR TO THE EXONERATION OF ANY SECURITY, EVIDENCE OF SUCH FILING SHALL BE FURNISHED TO THE CIVIL ENGINEER.
4. THE CONTRACTOR IS RESPONSIBLE TO INSURE THAT TRUCK ROUTES SHALL BE STEERED AWAY FROM RESIDENTIAL AREAS.
5. THE CONTRACTOR SHALL ENSURE THAT TRUCKS HAULING DIRT ON PUBLIC ROADS TO & FROM THE SITE SHALL BE COVERED OR WILL MAINTAIN A 6" DIFFERENTIAL BETWEEN THE MAX HGT OF ANY HAULED MATERIAL & THE TOP OF THE HAUL TRAILER. HAUL TRUCK DRIVERS SHALL WATER THE LOAD PRIOR TO LEAVING THE SITE TO PREVENT SOIL LOSS DURING TRANSPORT.
6. THE CONTRACTOR SHALL ENSURE THAT GRADED SURFACES USED FOR OFF ROAD PARKING, MATERIALS LAY-DOWN, OR AWAITING FUTURE CONSTRUCTION SHALL BE STABILIZED FOR DUST CONTROL AS NEEDED. FREQUENTLY ACCESSED UNPAVED AREAS SHALL BE PAVED AS EARLY AS POSSIBLE TO MINIMIZE DIRT TRACKOUT TO PUBLIC RIGHTS-OF-WAY.
7. THE CONSTRACTOR SHALL COORDINATE ANY LANE CLOSURES OR DETOURS WITH THE CITY/COUNTY. FLAG PERSONS & APPROPRIATE TRAFFIC CONTROL DEVICES SHALL BE USED AS NEEDED TO MINIMIZE CONSTRUCTION ACTIVITY INTERFERENCE WITH OFF-SITE-TRAFFIC.
8. THE CONTRACTOR SHALL VERIFY ALL DIMENSIONS & SITE CONDITIONS BEFORE STARTING WORK. SHOULD A DISCREPANCY APPEAR IN THE CONTRACT DOCUMENTS OR BETWEEN THE CONTRACT DOCUMENTS & EXISTING CONDITIONS, NOTIFY THE ARCHITECT AT ONCE FOR INSTRUCTION ON HOW TO PROCEED.
9. SHOULD A CONFLICT OCCUR BETWEEN DWGS & SPECIFICATIONS, THE MORE COSTLY CONDITION SHALL TAKE PRECEDENCE. UNLESS A WRITTEN DECISION FROM THE ARCHITECT HAS BEEN OBTAINED WHICH DESCRIBES A CLARIFICATION OR ALTERNATE METHOD AND/OR MATERIALS.
10. THE CONTRACTOR SHALL CONFINE HIS OPERATION ON THE SITE TO AREAS PERMITTED BY OWNER.
11. THE JOBSITE SHALL BE MAINTAINED IN A CLEAN, ORDERLY CONDITION FREE OF DEBRIS & LITTER & SHALL NOT BE UNREASONABLY ENCUMBERED WITH ANY MATERIALS OR EQUIPMENT. EACH SUBCONTRACTOR IMMEDIATELY UPON COMPLETION OF EACH PHASE OF HIS WORK SHALL REMOVE ALL TRASH & DEBRIS AS A RESULT OF HIS OPERATION.
12. ALL MATERIAL STORED ON THE SITE SHALL BE PROPERLY STACKED & PROTECTED TO PREVENT DAMAGE & DETERIORATION. FAILURE TO PROTECT MATERIALS MAY BE CAUSE FOR REJECTION OF WORK.
13. THE CONTRACTOR SHALL DO ALL CUTTING, FITTING, AND/OR PATCHING OF HIS WORK THAT MAY BE REQ TO MAKE ITS SEVERAL PARTS FIT TOGETHER PROPERLY & SHALL NOT ENDANGER ANY OTHER WORK BY CUTTING, EXCAVATING, OR OTHERWISE ALTERING THE TOTAL WORK OR ANY PART OF IT. ALL PATCHING, REPAIRING AND REPLACING OF MATERIALS AND SURFACES, CUT OR DAMAGED IN EXECUTION OF WORK, SHALL BE DONE WITH APPLICABLE MATERIALS SO THAT SURFACES REPLACED WILL, UPON COMPLETION, MATCH SURROUNDING SIMILAR SURFACES.
14. STRUCTURAL OBSERVATION WILL BE PERFORMED BY THE STRUCTURAL ENGINEER. WHEN REQ, A STATEMENT IN WRITING SHALL BE GIVEN TO THE BUILDING OFFICIAL, STATING THAT THE SITE VISITS HAVE BEEN MADE & WHETHER OR NOT ANY OBSERVED DEFICIENCIES HAVE BEEN CORRECTED TO CONFORM TO THE APPROVED PLANS & SPECIFICATIONS.
15. SUBMITTAL DOCUMENTS FOR DEFERRED SUBMITAL ITEMS SHALL BE SUBMITTED TO THE ARCHITECT OR ENGINEER OF RECORD, WHO SHALL REVIEW THEM & RETURN THEM TO THE CONTRACTOR (WITH A NOTIFICATION INDICATING THAT THE DEFERRED SUBMITTAL DOCUMENTS HAVE BEEN REVIEWED & THAT THEY HAVE BEEN FOUND TO BE IN GENERAL CONFORMANCE WITH THE DESIGN OF THE BUILDING) FOR PLAN CHECK APPROVAL. THE DEFERRED SUBMITTAL ITEMS SHALL NOT BE INSTALLED UNTIL THEIR DESIGN & SUBMITTAL DOCUMENTS HAVE BEEN APPROVED BY THE AUTHORITY HAVING JURISDICTION.
16. PROVIDE ALL ACCESS PANELS AS REQ BY GOVERNING CODES TO ALL CONCEALED SPACES, VOIDS, ATTICS, ETC. VERIFY TYPE REQ WITH ARCHITECT PRIOR TO INSTALLATION.
17. NO PORTION OF WORK REQ A SHOP DWG OR SAMPLE SUBMISSION SHALL BE COMMENCED UNTIL THE SUBMISSION HAS BEEN REVIEWED BY THE ARCHITECT. ALL SUCH PORTIONS OF THE WORK SHALL BE IN ACCORDANCE WITH CORRECTED SHOP DWGS. AND SAMPLES.
18. DIMENSIONS:
    A. ALL DIMS SHALL TAKE PRECEDENCE OVER SCALE.
    B. ALL DIMS ARE TO FACE OF STUD / CONCRETE / MASONRY UNO
    C. CLG HGT DIMS ARE FROM FACE OF SLAB TO FACE OF FIN CLG MATERIAL UNO
19. DO NOT SCALE DRAWINGS
20. PROVIDE ALL NECESSARY BLOCKING, BACKING, & FRAMING FOR LIGHT FIXTURES, ELECTRIC UNITS, AC EQUIP, RECESSED ITEMS, AND ALL OTHER ITEMS AS REQ.
21. WALL AND CLG MATERIALS SHALL NOT EXCEED THE FLAME SPREAD CLASSIFICATIONS IN THE APPLICABLE CODES.
22. SURVEYORS CERTIFICATE REQ PRIOR TO FINAL COMPLETION.
23. THE CONTRACTOR SHALL COMPLY WITH THE APPLICABLE CODES FOR FIRE SAFETY DURING CONSTRUCTION AND DEMOLITION. A DSA CERTIFIED CLASS 2 PROJECT INSPECTOR EMPLOYED BY THE DISTRICT (OWNER) AND APPROVED BY THE DIVISION OF THE STATE ARCHITECT (DSA) SHALL PROVIDE CONTINUOUS INSPECTION OF THE WORK. THE DUTIES OF THE INSPECTOR ARE DEFINED IN SECTION 4-342, CALIFORNIA BUILDING STANDARDS ADMINISTRAIVE CODE (PART 1, TITLE 24, CCR)
24. A DSA ACCEPTED TESTING LABORATORY DIRECTLY EMPLOYED BY THE DISTRICT (OWNER) SHALL CONDUCT ALL THE REQ TESTS AND INSPECTIONS FOR THE PROJECT.
25. CHANGE TO THE APPROVED DWGS AND SPECIFICATIONS SHALL BE MADE BY ADDENDA OR CONSTRUCTION CHANGE DOCUMENT (CCD) APPROVED BY DSA, AS REQ BY SECTION 4-338, PART 1, TITLE 24, CCR.
26. THE INTENT OF THESE DWGS AND SPECIFICATIONS IS THAT THE WORK OF THE ALTERATION, REHABILITATION OR RECONSTRUCTION IS TO BE IN ACCORDANCE WITH TITLE 24, CCR. SHOULD ANY EXG CONDITIONS SUCH AS DETERIORATION OR NON-COMPLYING CONSTRUCTION BE DISCOVERED WHICH IS NOT COVERED BY THE CONTRACT DOCUMENTS WHEREIN THE FINISHED WORK WILL NOT COMPLY WITH TITLE 24, CCR, A CONSTRUCTION CHANGE DOCUMENT (CCD), OR A SEPARATE SET OF PLANS AND SPECIFICATIONS, DETAILING AND SPECIFYING THE REQ WORK SHALL BE SUBMITTED TO AND APPROVED BY DSA BEFORE PROCEEDING WITH THE WORK. (SECTION 4-317(c), PART 1, TITLE 24, CCR)
27. SUBSTITUTIONS AFFECTING ITEMS REGULATED BY THE DIVISION OF THE STATE ARCHITECT (DSA) REQUIRE DSA APPROVAL AS AN ADDENDUM OR A CONSTRUCTION CHANGE DOCUMENT (CCD). DSA APPROVAL SHALL BE OBTAINED PRIOR TO FABRICATION AND/OR INSTALLATION PER SECTION 4-338, PART 1, TITLE 24, CCR.
28. ALL CONSTRUCTION AND DEMOLITION SHALL BE IN ACCORDANCE WITH CHAPTER 33 OF THE CBC AND CFC, AND THE WRITTEN SITE SAFETY PLAN.
29. "DSA CERTIFIED' PROJECT INSPECTOR EMPLOYED BY THE DISTRICT (OWNER) AND APPROVED BY THE DSA SHALL PROVIDE CONTINUOUS INSPECTION OF THE WORK. THE DUTIES OF THE INSPECTOR ARE DEFINED IN SECTION 4-342, PART 1, TITLE 24, CCR. A MINIMUM CLASS 2_INSPECTOR IS REQUIRED.

FIRE AND LIFE SAFETY NOTES

1. PLANS FOR THE FIRE SPRINKLER SYSTEMS MUST BE APPROVED BY THE AUTHORITY HAVING JURISDICTION (AHJ) PRIOR TO INSTALLATION. SUBMIT PLANS IN A MANNER WHICH WILL NOT IMPEDE THE PROGRESS OF CONSTRUCTION.
2. FIRE SPRINKLER SYSTEMS & INSTALLATION SHALL CONFORM W/ THE APPLICABLE STANDARDS AND CODES.
3. FIRE SPRINKLER SYSTEMS TO BE TIED INTO THE ALARM SYSTEM PER THE APPLICABLE CODES.
4. AUTOMATIC SPRINKLER SYSTEM(S) SHALL BE SUPERVISED BY AN APPROVED CENTRAL OR REMOTE STATION SERVICE, AND/OR SHALL BE PROVIDED W/ A LOCAL ALARM WHICH WILL GIVE AN AUDIBLE SIGNAL.
5. FIRE SPRINKLER SYSTEM(S) & ALL CONTROL VALVES SHALL BE SUPERVISED BY A U.L. LISTED CENTRAL ALARM STATION OR PER THE APPLICABLE CODES.
6. FIRE HYDRANT & FIRE SPRINKLER SYSTEM(S) SHALL BE FLUSHED THOROUGHLY BEFORE CONNECTION IS MADE TO EXISTING SYSTEM STUBOUTS & WITNESSED BY THE PROJECT INSPECTOR.
7. A HYDROSTATIC TEST (200 PSI PRESSURE FOR 2 HRS. OR @ 50 PSI IN EXCESS OF THE MIN. STATIC PRESSURE WHEN IT IS IN EXCESS OF 150 PSI) SHALL BE WITNESSED BY THE PROJECT INSPECTOR PRIOR TO COVERING PIPING JOINTS.
8. A 3' CLR SPACE SHALL BE MAINTAINED AROUND THE CIRCUMFERENCE OF FIRE HYDRANTS EXCEPT AS OTHERWISE REQ OR APPROVED PER THE APPLICABLE CODES.
9. THRUST BLOCKS SHALL BE PROVIDED WHEREVER PIPE CHANGES DIRECTION.
10. ALL PIPE SHALL BE UL LISTED FOR FIRE SERVICE SYSTEMS, CLASS 200 MIN.
11. FIRE DEPARTMENT CONNECTIONS SHALL BE LOCATED W/I 100' FROM A PUBLIC FIRE HYDRANT PER THE APPLICABLE STANDARDS AND CODES.
12. FIRE SPRINKLER RISER SHALL BE LOCATED WITHIN 5 FT OF THE EXT WALL (OR AS REQ BY THE AHJ) AND TERMINATE 6" ABV FF
13. AN ALL-WEATHER FIRE ACCESS ROAD SHALL BE IN PLACE BEFORE ANY COMBUSTIBLE MATERIALS ARE PLACED ON THE SITE OR AS REQ BY THE AHJ.
14. STORAGE, DISPENSING, OR USE OF ANY FLAMMABLE & COMBUSTIBLE LIQUIDS, FLAMMABLE & COMPRESSED GASES & OTHER HAZARDOUS MATERIALS SHALL COMPLY W/ THE APPLICABLE CODES.
15. ACCESS GATE(S) SHALL BE OPENABLE W/ FIRE DEPT MASTER KEY FROM THE EXTERIOR.
16. CURBS ALONG FIRE LANES SHALL BE PAINTED SAFETY RED & MARKED "FIRE LANE NO PARKING" W/ 3" WHITE LETTERS ON THE TOP OF CURBING EVERY 30' AS INDICATED ON THE APPROVED DRAWINGS.
17. PROVIDE PERMANENT OR TEMPORARY STANDPIPES WHILE BUILDING IS UNDER CONSTRUCTION PER THE APPLICABLE CODES.

APPLICABLE CODES

LIST OF APPLICABLE CODES

2025	CALIFORNIA ADMINISTRATIVE CODE (CAC), PART 1, TITLE 24 CCR
2022	CALIFORNIA BUILDING CODE (CBC), PART 2, TITLE 24 CCR
2022	CALIFORNIA ELECTRICAL CODE (CEC), PART 3, TITLE 24 CCR
2022	CALIFORNIA MECHANICAL CODE (CMC), PART 4, TITLE 24 CCR
2022	CALIFORNIA PLUMBING CODE (CPC), PART 5, TITLE 24 CCR
2022	CALIFORNIA ENERGY CODE, PART 6, TITLE 24 CCR
2022	CALIFORNIA FIRE CODE (CFC), PART 9, TITLE 24 CCR
2022	CALIFORNIA EXISTING BUILDING CODE (CEBC), PART 10, TITLE 24 CCR
2022	CALIFORNIA GREEN BUILDING STANDARDS CODE (CALGREEN), PART 11, TITLE 24 CCR
2022	CALIFORNIA REFERENCED STANDARDS CODE, PART 12, TITLE 24 CCR

TITLE 19 CCR, PUBLIC SAFETY, STATE FIRE MARSHAL REGULATIONS

APPLICABLE STANDARDS

FOR A LIST OF APPLICABLE STANDARDS, INCLUDING CALIFORNIA AMENDMENTS TO THE NFPA STANDARDS, REFER TO CBC CHAPTER 35 AND CFC CHAPTER 80.

VICINITY MAP

PROPOSED SITE:
ELKHORN ELEMENTARY SCHOOL

ADDRESS:
10505 DAVIS RD,
STOCKTON, CA, 95209

TRUE NORTH PROJECT NORTH

PROJECT SCOPE

ELKHORN ELEMENTARY SCHOOL CAMPUS MODERNIZATION PROJECT IS LOCATED IN STOCKTON, CA AS A PART OF LODI UNIFIED SCHOOL DISTRICT. THIS PROJECT'S SCOPE OF WORK INCLUDES:

INC 1: SITE MAKE READY INCLUDING UPGRADES TO UTILITIES, NEW DROP OFF, NEW GRADING, NEW PAVING, & MISC. SITE IMPROVEMENTS, INCLUDING A NEW SHADE STRUCTURE.

INC 2: MODERNIZATION TO BUILDING A, D, & F. SITE IMPROVEMENTS INCLUDING NEW PLAY STRUCTURE, PAVING, AND LANDSCAPING.

INC 3: NEW MODULAR CLASSROOM BUILDING

BID ALTERNATES

INC 1: ADD ALT 5 - REMOVE SOFTBALL FIELD & HYBRID SEED

INC 2:
ADD ALT 1 - BUILDING A RENOVATION
ADD ALT 2 - BUILDING D RENOVATION
ADD ALT 3 - PLAY STRUCTURE
ADD ALT 4 - OUTDOOR LEARNING IN FRONT OF BLDG A

INC 3: NONE

LIMIT OF WORK

THE INTENT OF THE LIMIT OF WORK LINE IS TO DESCRIBE IN GENERAL THE AREAS AFFECTED BY PROJECT CONSTRUCTION. IT IS NOT INTENDED TO BE AN EXACT INDICATION OR EDGE OF THE CONSTRUCTION AREA. THE CONTRACTOR SHOULD VISIT THE SITE & BECOME FAMILIAR W/ EXG CONDITIONS & THEIR RELATIONSHIP TO THE WORK PROPOSED IN THE CONTRACT DOCUMENTS. ALL ITEMS NECESSARY FOR THE PROPER EXECUTION & COMPLETION OF THE WORK SHALL BE INCLUDED. THE CONTRACT DOCUMENTS ARE COMPLEMENTARY & WHAT IS REQ BY ONE SHALL BE BINDING AS IF REQ BY ALL TO THE EXTENT THAT IT IS REASONABLY INFERABLE FROM THEM AS BEING NECESSARY TO PRODUCE THE INTENDED RESULTS.

CALIFORNIA CLIMATE ZONE

CALIFORNIA CLIMATE ZONE: 12

DEFERRED SUBMITTAL

N/A

STATEMENT OF GENERAL CONFORMANCE

Application No.: 02-123848

File No.: 39-50

The drawings identified as follows:

☒ All drawing sheets included in this set not bearing my stamp and signature.

☐ Drawing sheets denoted in the sheet index as follows: _____

☐ Drawing sheets included under the following PC approval(s): _____

have been prepared by other design professionals or consultants who are licensed and authorized to prepare such drawings (plans) in this state. They have been examined by me for:

1) Design intent and appear to meet the appropriate requirements of Title 24, California Code of Regulations and the project specifications prepared by me, and
2) Coordination with my drawings (plans) and specifications and are acceptable for incorporation into the construction of this project.

Per Title 24, Part 1, Section 4-316(b): This Statement of General Conformance shall not be construed as relieving me of my rights, duties, and responsibilities under Sections 17302 and 81138 of the Education Code and Sections 4-336, 4-341 and 4-344 of Title 24, Part 1.

Signature		04/09/2026 Date
JULIAN WATT Printed Name	C-40596 License Number	12/31/2027 Expiration Date

PROJECT DIRECTORY

CLIENT INFORMATION

NAME: LODI UNIFIED SCHOOL DISTRICT
ADDRESS: 130 E VINE STREET
CITY,STATE, ZIP: LODI, CA 95240
DISTRICT REPRESENTATIVE
TEL: 209-331-7000
CONTACT: EDITH HOLBERT E-MAIL: eholbert@lodiusd.net

ARCHITECT

NAME: LPA, INC.
ADDRESS: 431 I ST #107
CITY,STATE, ZIP: SACRAMENTO, CA 95814
TEL: (916) 287-2348
CONTACT: AMY FISHER E-MAIL: afisher@lpadesignstudios.com

LANDSCAPE ARCHITECT

NAME: LPA, INC.
ADDRESS: 431 I ST #107
CITY,STATE, ZIP: SACRAMENTO, CA 95814
TEL: (916) 287-2326
CONTACT: ANDREW WICKHAM E-MAIL: awickham@lpadesignstudios.com

CIVIL ENGINEER

NAME: LPA, INC.
ADDRESS: 431 I ST #107
CITY,STATE, ZIP: SACRAMENTO, CA 95814
TEL: (916) 287-2350
CONTACT: CYNTHIA DUNNELLS E-MAIL: cdunnells@lpadesignstudios.com

STRUCTURAL ENGINEER

NAME: LPA, INC.
ADDRESS: 2765 TRUXTUN ROAD
CITY,STATE, ZIP: SAN DIEGO, CA 92106
TEL: (619) 929-3942
CONTACT: HARSHDA PRASAD E-MAIL: hprasad@lpadesignstudios.com

MECHANICAL ENGINEER

NAME: LPA, INC.
ADDRESS: 5301 CALIFORNIA AVE, SUITE 100
CITY,STATE, ZIP: IRVINE, CA 92617
TEL: (949) 701-4198
CONTACT: ERIC RING E-MAIL: ering@lpadesignstudios.com

ELECTRICAL ENGINEER

NAME: LPA, INC.
ADDRESS: 5301 CALIFORNIA AVE, SUITE 100
CITY,STATE, ZIP: IRVINE, CA 92617
TEL: (949) 701-4019
CONTACT: ALDO BACUZZI E-MAIL: abacuzzi@lpadesignstudios.com

PLUMBING ENGINEER

NAME: LPA, INC.
ADDRESS: 5301 CALIFORNIA AVE, SUITE 100
CITY,STATE, ZIP: IRVINE, CA 92617
TEL: (949) 701-4089
CONTACT: GREG WEBB E-MAIL: gwebb@lpadesignstudios.com

FIRE ALARM

NAME: LPA, INC.
ADDRESS: 5301 CALIFORNIA AVE, SUITE 100
CITY,STATE, ZIP: IRVINE, CA 92617
TEL: (949) 701-4312
CONTACT: MIKE NOROUZI E-MAIL: mnorouzi@lpadesignstudios.com

GEOTECHNICAL ENGINEER

NAME: MID PACIFIC ENGINEERING, INC.
ADDRESS: 8910 EAST VICTOR ROAD
CITY,STATE, ZIP: LODI, CA 95240
TEL: (209) 625-4400
CONTACT: DANIEL SMITH E-MAIL: smithdansmith@midpacificeng.com

TECHNOLOGY

NAME: LP ENGINEERS
ADDRESS: 1209 PLEASANT GROVE BLVD
CITY,STATE, ZIP: ROSEVILLE, CA 95678
TEL: (916) 721-2913
CONTACT: JOSIAH ZAMORA E-MAIL: jzamora@lpengineers.com

RESPONSIBILITY FOR JOB SITE SAFETY

NOTICE TO PERSONS PEREFORMING WORK ON JOB SITE, INCLUDING CONTRACTORS, SUBCONTRACTORS, MATERIAL SUPPLIERS AND ANY AGENTS OR EMPLOYEES THEREOF

THESE PLANS AND SPECIFICATIONS DO NOT PROVIDE ANY DIRECTION OR INSTRUCTIONS TO CONTRACTORS, SUBCONTRACTORS, MATERIAL SUPPLIERS OR THEIR EMPLOYEES OR AGENTS RELATED TO CONSTRUCTION MEANS, METHODS, TECHNIQUES, SEQUENCES OR PROCEDURES, SAFETY PRECAUTIONS, MANNERS OR METHODS OF EGRESS OR INGRESS, INCLUDING BUT NOT LIMITED TO JOB SITE SAFETY, THE PHYSICAL CONDITION OF THE JOB SITE, THE MANNER OR METHOD IN WHICH THE AREA WHERE WORK IS PERFORMED IS ACCESSED BY WORKERS, AND SAFETY PROGRAMS OR SAFETY PROTOCOLS OF ANY KIND IN CONNECTION WITH THE WORK. ALL OF THE FOREGOING ARE SOLELY AND EXCLUSIVELY THE RESPONSIBILITY OF THE CONTRACTOR, SUBCONTRACTOR, MATERIAL SUPPLIERS, OR ANY AGENTS OR EMPLOYEES THEREOF.

THE ARCHITECT EXPRESSLY DISCLAIMS ANY CONTROL OVER AND RESPONSIBILITY FOR CONSTRUCTION MEANS, METHODS, TECHNIQUES, SEQUENCES OR PROCEDURES, SAFETY PRECAUTIONS, MANNERS OR METHODS OF EGRESS OR INGRESS, INCLUDING BUT NOT LIMITED TO JOB SITE SAFETY, THE PHYSICAL CONDITION OF THE JOB SITE, THE MANNER OR METHOD IN WHICH THE AREA WHERE WORK IS PERFORMED IS ACCESSED BY WORKERS, AND SAFETY PROGRAMS OR SAFET

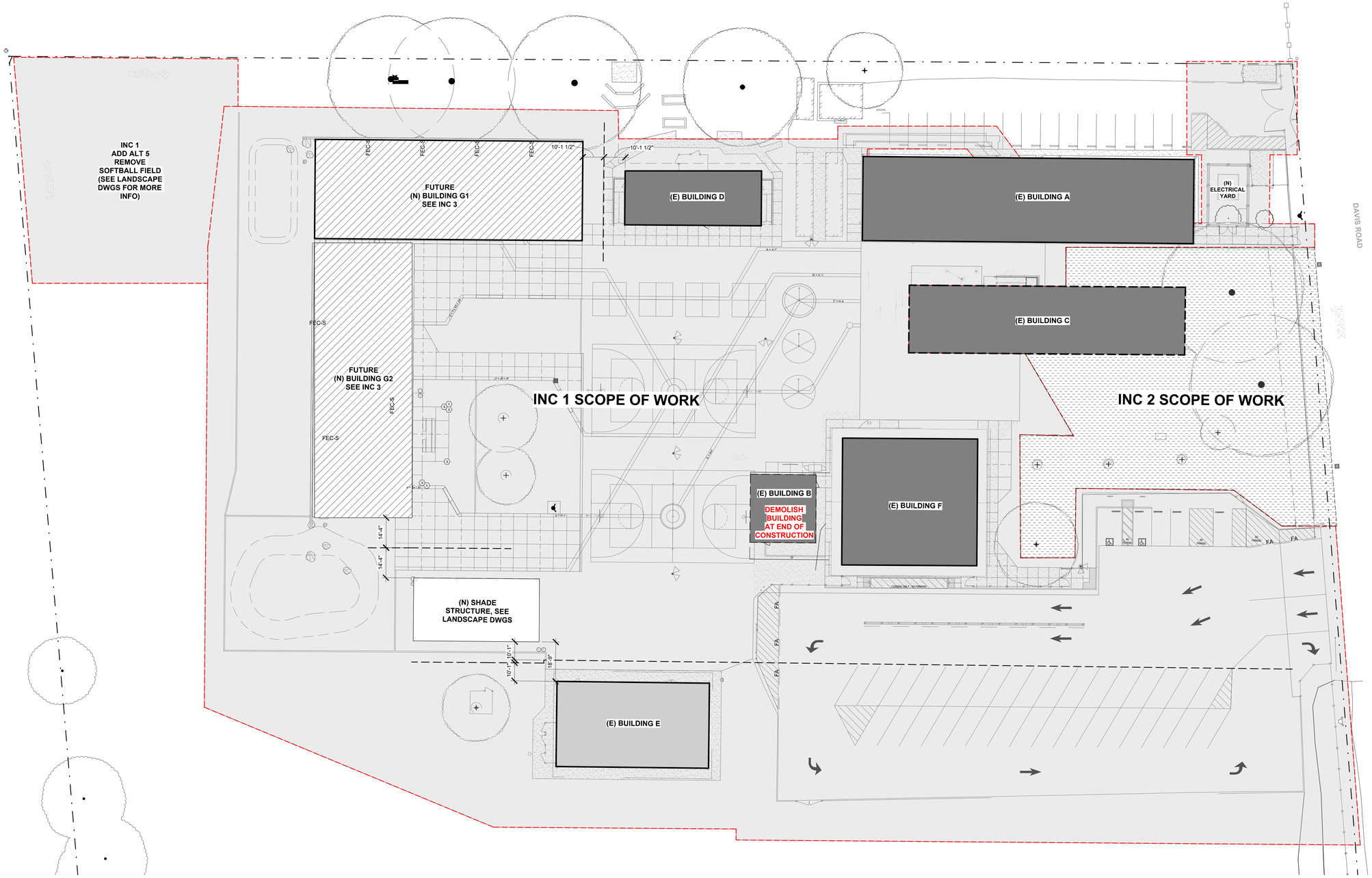

SITE PLAN | 1" = 20'-0" | 1G1.01 | 02

ELKHORN ELEMENTARY SCHOOL - CAMPUS BUILDING CODE ANALYSIS

BUILDING DESIGNATION	DSA PROJECT #	OCCUPANCY TYPE	CONSTRUCTION TYPE	SPRINKLERED	BASIC ALLOWED AREA SF	AREA INCREASE	CBC SECTION FOR INCREASE	TOTAL ALLOWED AREA SF	ACTUAL AREA SF	ALLOW STORY	ACTUAL STORY	NOTES
BUILDING A	46411	E	V-B	NO	9,500	NOT TAKEN	-	9,500	6,258	1	1	
BUILDING B/F	24262	E/B	V-B	NO	9,000	NOT TAKEN	-	9,000	6,472	1	1	NON-SEPARATED OCCUPANCY - USED MOST RESTRICTIVE OCCUPANCY
BUILDING C	37389, 42323	E/B	V-B	NO	9,000	NOT TAKEN	-	9,000	4,244	1	1	NON-SEPARATED OCCUPANCY - USED MOST RESTRICTIVE OCCUPANCY
BUILDING D	42976	E	V-B	NO	9,500	NOT TAKEN	-	9,500	1,540	1	1	
BUILDING E	A02-102324	A-2	V-B	NO	6,000	NOT TAKEN	-	6,000	2,991	1	1	
FUTURE BUILDING G (SEE INC 3)	A02-123848	E	V-B	YES	38,000	NOT TAKEN	-	38,000	12,281	2	1	
PC SHADE STRUCTURE	04-122188 PC	A-2	II-B	NO	9,500	NOT TAKEN	-	9,500	1,800	1	1	

CAMPUS PLUMBING CODE ANALYSIS

MINIMUM NUMBER OF REQ PLUMBING FIXTURES (CPC TABLE 422.1):

CAMPUS POPULATION:
STUDENTS: 400 --> 200 MALE / 200 FEMALE
STAFF: 20 --> 10 MALE / 10 FEMALE

REQUIRED (STUDENTS):

	WATER CLOSET	URINALS	LAVATORIES
MEN	4	2	5
WOMEN	7	-	5

PROVIDED (STUDENTS):

	WATER CLOSET	URINALS	LAVATORIES
MEN (MOD)	3	2	3
MEN (BLDG A)	1	3	2
TOTAL	**4**	**5**	**5**
WOMEN (MOD)	5	-	3
WOMEN (BLDG A)	4	-	2
TOTAL	**9**	**-**	**5**

REQUIRED (STAFF):

	WATER CLOSET	URINALS	LAVATORIES
MEN	1	1	1
WOMEN	1	-	1

PROVIDED (STAFF):

	WATER CLOSET	URINALS	LAVATORIES
MEN	1	1*	1
WOMEN	1	-	1

*URINAL COUNTS INCLUDE TOILETS AT GENDER NEUTRAL RESTROOMS.

REQUIRED DRINKING FOUNTAINS: 4
PROVIDED DRINKING FOUNTAINS: 4

LEGEND

- (N) SHADE STRUCTURE - INC 1
- FOR REFERENCE: (E) BUILDING NOT UNDER SCOPE OF WORK
- FOR REFERENCE: RENOVATE (E) BUILDING SEE INC 2
- INC 1 SITE SCOPE OF WORK
- FOR REFERENCE: DEMOLISH (E) BUILDING - SEE INC 2
- FOR REFERENCE: INC 2 SITE SCOPE OF WORK
- FOR REFERENCE: (N) BUILDING - SEE INC 3
- IMAGINARY PROPERTY LINE
- PROPERTY LINE

GENERAL NOTES

1. FOR ADDITIONAL INFORMATION ON SITE SCOPE, REFER TO CIVIL AND LANDSCAPE DRAWINGS.
2. REPLACE EXTERIOR THRESHOLD WHERE SITE PAVING HAS BEEN REPLACED PER CIVIL DRAWINGS.

IDENTIFICATION STAMP
DIV. OF THE STATE ARCHITECT
APP: 02-123848 INC: 01
REVIEWED FOR
SS ☑ FLS ☑ ACS ☑
DATE: 05/21/2026

LPA
ARCHITECTURE ENGINEERING INTERIOR DESIGN
LANDSCAPE ARCHITECTURE PLANNING
916-287-2400 Office
LPADesignStudios.com
431 I Street, Suite 107
Sacramento, California 95814

LICENSED ARCHITECT
JULIAN WATT
C-40596
17 DEC 2027
RENEWAL DATE
STATE OF CALIFORNIA

This document and all other project documents, ideas, aesthetics and designs incorporated therein are instruments of service. All project documents are copyright protected, are the property of LPA, Inc. (LPA) and cannot be lawfully used in whole or in part for any project or purpose except as set forth in the contractual agreement between LPA and its Client. The unauthorized disclosure and/or use of the project documents (including the creation of derivative works), may give rise to liability for copyright infringement, unlawful disclosure, use or misappropriation of property rights held by LPA. The unauthorized use of the project documents will give rise to the recovery of monetary losses and damages including attorney fees and costs for which the unauthorized user will be held liable.
Project documents describe the design intent of the work and are not a representation of as-built or existing conditions. LPA is not responsible for any discrepancies between the project documents and the existing conditions.

© LPA, Inc.

ELKHORN ELEMENTARY SCHOOL
CAMPUS MODERNIZATION INCREMENT 1

10505 DAVIS ROAD, STOCKTON, CA
95209

Developed for
LODI UNIFIED SCHOOL DISTRICT

Revision	Date

Submittal	Date
100% SCHEMATIC DESIGN	08/29/2025
DSA SUBMITTAL	12/18/2025

Job Number	31942
Checked By	Checker
Scale	As indicated

SITE PLAN

1G1.01

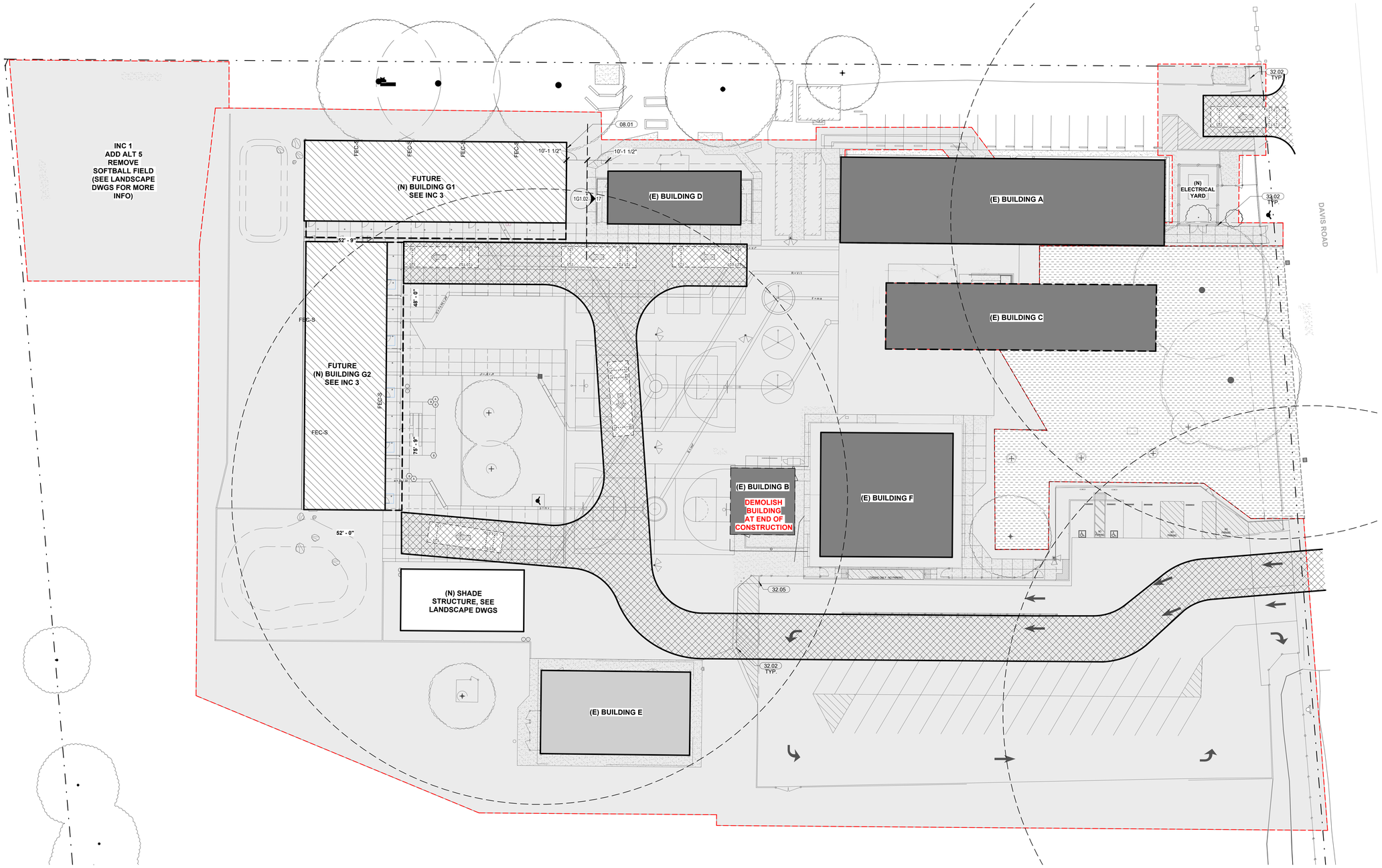

FIRE ACCESS SITE PLAN | 1" = 20'-0" | 1G1.02 | 02

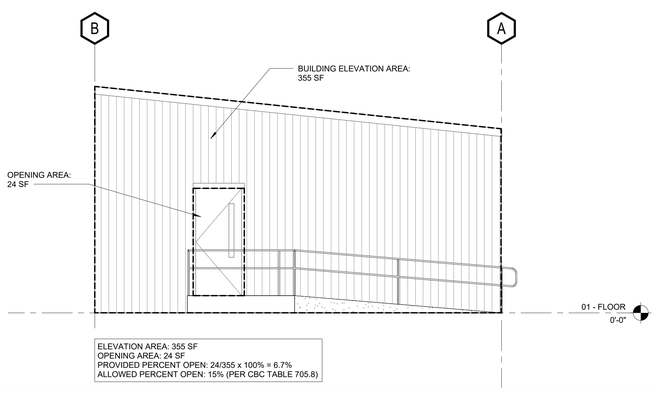

BUILDING D - WEST ELEVATION | 1/4" = 1'-0" | 1G1.02 | 17

KEYNOTES

08.01	NO OPENINGS ON THIS ELEVATION
32.02	FIRE ACCESS KEY BOX, TYP. (UL 1037)
32.05	REFER TO SHEET 1C5.01 - FOR UPDATED FIRE LANE STRIPING ADJACENT TO FIRE ACCESS

GENERAL NOTES

1. FOR ADDITIONAL INFORMATION ON SITE SCOPE, REFER TO CIVIL AND LANDSCAPE DRAWINGS.

LEGEND

- (N) SHADE STRUCTURE - INC 1
- FOR REFERENCE: RENOVATE (E) BUILDING SEE INC 2
- FOR REFERENCE: DEMOLISH (E) BUILDING - SEE INC 2
- FOR REFERENCE: (N) BUILDING - SEE INC 3
- FOR REFERENCE: (E) BUILDING NOT UNDER SCOPE OF WORK
- PROPERTY LINE
- FIRE ACCESS
- INC 1 SITE SCOPE OF WORK
- FOR REFERENCE: INC 2 SITE SCOPE OF WORK
- PROPOSED FIRE ACCESS LANE, 20'-0"W U.N.O., 20'-0" MIN. INSIDE RADIUS U.N.O.
- INC 1 SITE SCOPE OF WORK
- FOR REFERENCE: INC 2 SITE SCOPE OF WORK
- IMAGINARY PROPERTY LINE
- FIRE HYDRANT
- (E) FIRE HYDRANT
- FIRE HYDRANT RADIUS

IDENTIFICATION STAMP
DIV. OF THE STATE ARCHITECT
APP: 02-123848 INC: 01
REVIEWED FOR
SS ☑ FLS ☑ ACS ☑
DATE: 05/21/2026

LPA
ARCHITECTURE ENGINEERING INTERIOR DESIGN
LANDSCAPE ARCHITECTURE PLANNING
916-287-2400 Office
LPADesignStudios.com
431 I Street, Suite 107
Sacramento, California 95814

LICENSED ARCHITECT
JULIAN WATT
C-40596
17 DEC 2027
GENERAL
STATE OF CALIFORNIA

This document and all other project documents, ideas, aesthetics and designs incorporated therein are instruments of service. All project documents are copyright protected, are the property of LPA, Inc. (LPA) and cannot be lawfully used in whole or in part for any project or purpose except as set forth in the contractual agreement between LPA and its Client. The unauthorized disclosure and/or use of the project documents (including the creation of derivative works), may give rise to liability for copyright infringement, unlawful disclosure, use or misappropriation of property rights held by LPA. The unauthorized use of the project documents will give rise to the recovery of monetary losses and damages including attorney fees and costs for which the unauthorized user will be held liable.
Project documents describe the design intent of the work and are not a representation of as-built or existing conditions. LPA is not responsible for any discrepancies between the project documents and the existing conditions.

© LPA, Inc.

ELKHORN ELEMENTARY SCHOOL
CAMPUS MODERNIZATION INCREMENT 1

10505 DAVIS ROAD, STOCKTON, CA
95209

Developed for
LODI UNIFIED SCHOOL DISTRICT

Revision	Date

Submittal	Date
100% SCHEMATIC DESIGN	08/29/2025
DSA SUBMITTAL	12/18/2025

Job Number	31942
Checked By	Checker
Scale	As indicated

FIRE ACCESS SITE PLAN

1G1.02

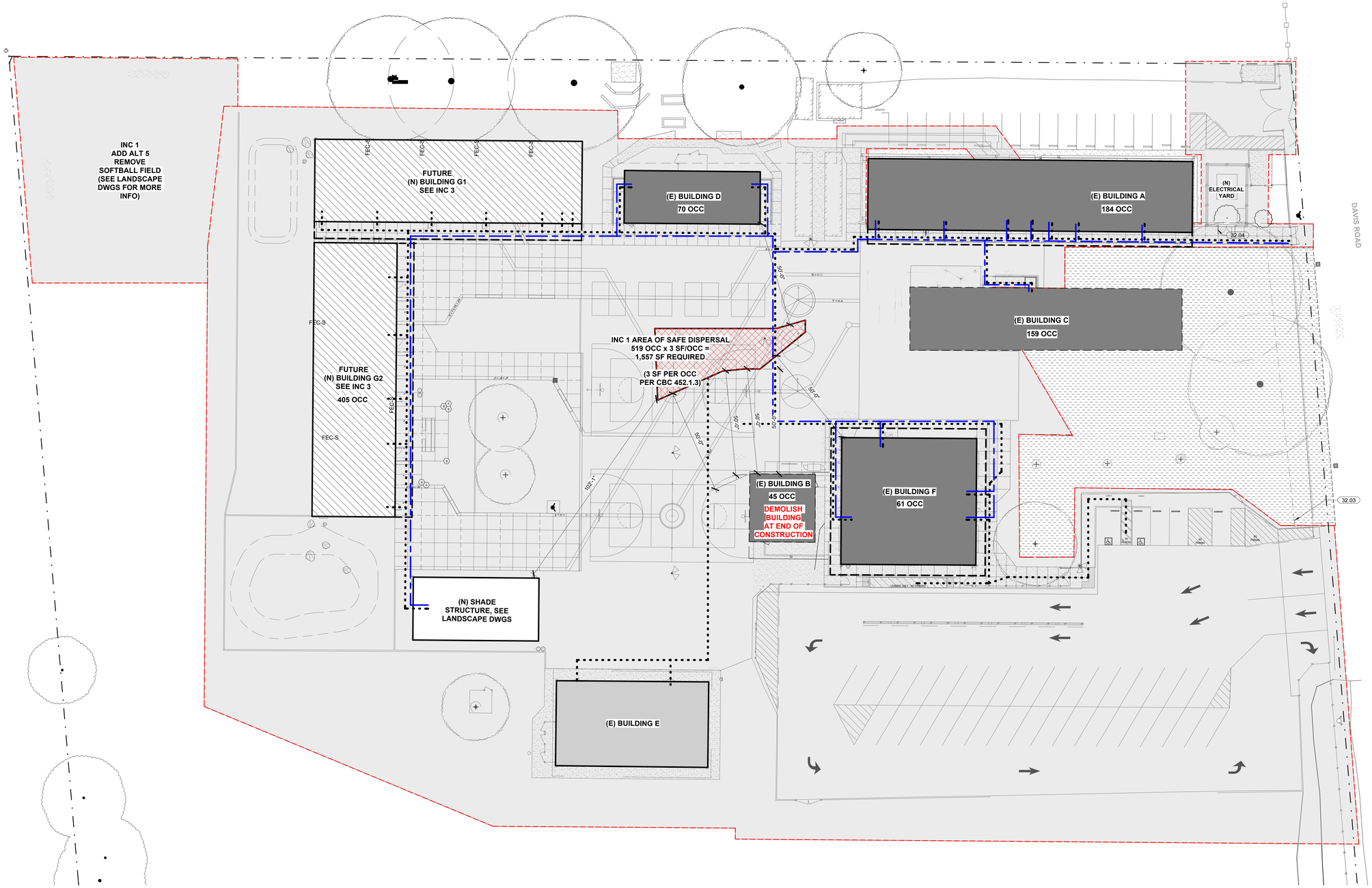

SITE ACCESSIBILITY PLAN | 1" = 20'-0" | 1G1.03 | 02

KEYNOTES

32.03	(E) TOW AWAY SIGN, REPLACE SIGNAGE, REFER TO CIVIL DRAWINGS
32.04	(N) GATE WITH PANIC HARDWARE, SEE LANDSCAPE DRAWINGS

ACCESSIBLE PARKING CALCULATION

(PER CBC TABLE 11B - 208.2)

TOTAL STALLS:	36
REQUIRED ACCESSIBLE STALLS:	2
REQUIRED VAN ACCESSIBLE STALLS:	1
PROVIDED ACCESSIBLE STALLS:	2
PROVIDED ACCESIBLE VAN STALLS:	1

SCOPE OF WORK DOES NOT TRIGGER REQUIRED EV CHARGING STALL INSTALL IN ACCORDANCE WITH CBC 5.106.5.6.4 AND CBC 5.106.5.6.5

GENERAL NOTES

1. FOR ADDITIONAL INFORMATION ON SITE SCOPE, REFER TO CIVIL AND LANDSCAPE DRAWINGS.
2. THE PATH OF TRAVEL IDENTIFIED IN THESE CONSTRUCTION DOCUMENTS IS COMPLIANT WITH CURRENT APPLICABLE CALIFORNIA BUILDING CODE ACCESSIBILITY PROVISIONS FOR PATH OF TRAVEL REQUIREMENTS FOR ALTERATIONS AND STRUCTURAL REPAIRS. AS PART OF THE DESIGN OF THIS PROJECT, THE PATH OF TRAVEL WAS EXAMINED AND ANY ELEMENTS, COMPONENTS, OR PORTIONS OF THE PATH OF TRAVEL THAT WERE DETERMINED TO BE NONCOMPLIANT 1) HAVE BEEN IDENTIFIED AND 2) THE CORRECTIVE WORK NECESSARY TO BRING THEM INTO COMPLIANCE HAS BEEN INCLUDED WITHIN THE SCOPE OF THIS PROJECT'S WORK THROUGH DETAILS, DRAWINGS, AND SPECIFICATIONS INCORPORATED INTO THESE CONSTRUCTION DOCUMENTS. ANY NONCOMPLIANT ELEMENTS, COMPONENTS, OR PORTION OF THE PATH OF TRAVEL THAT WILL NOT BE CORRECTED BY THIS PROJECT BASED ON VALUATION THRESHOLD LIMITATIONS OR A FINDING OF UNREASONABLE HARDSHIP ARE SO INDICATED IN THESE CONSTRUCTION DOCUMENTS. DURING CONSTRUCTION, IF PATH OF TRAVEL ITEMS WITHIN THE SCOPE OF THE PROJECT REPRESENTED AS CBC CODE COMPLIANT ARE FOUND TO BE NONCONFORMING BEYOND REASONABLE CONSTRUCTION TOLERANCES, THEY SHALL BE BROUGHT INTO COMPLIANCE WITH THE CBC AS A PART OF THIS PROJECT BY MEANS OF A "CONSTRUCTION CHANGE DOCUMENT" - FORM DSA 140.
3. ACCESSIBLE PATH OF TRAVEL AS INDICATED ON PLANS IS A BARRIER FREE ACCESS ROUTE WITHOUT ANY ABRUPT LEVEL CHANGES EXCEEDING 1/2" IF BEVELED AT 1:2 MAXIMUM SLOPE OR VERTICAL LEVEL CHANGES NOT EXCEEDING 1/4" MAXIMUM AND AT LEAST 48" IN WIDTH. SURFACE IS STABLE, FIRM, AND SLIP RESISTANT. CROSS SLOPE DOES NOT EXCEED 2% AND SLOPE IN THE DIRECTION OF TRAVEL IS LESS THAN 5% UNLESS OTHERWISE INDICATED. ACCESSIBLE PATH OF TRAVEL SHALL BE MAINTAINED FREE OF OVERHANGING OBSTRUCTIONS TO 80" MINIMUM AND PROTRUDING OBJECTS GREATER THAN 4" PROJECTION FROM WALL ABOVE 27" AND LESS THAN 80". ARCHITECT SHALL VERIFY THAT THERE ARE NO BARRIER IN THE PATH OF TRAVEL.

LEGEND

- (N) SHADE STRUCTURE - INC 1
- FOR REFERENCE: RENOVATE (E) BUILDING SEE INC 2
- FOR REFERENCE: DEMOLISH (E) BUILDING SEE INC 2
- FOR REFERENCE: (N) BUILDING - SEE INC 3
- FOR REFERENCE: (E) BUILDING NOT UNDER SCOPE OF WORK
- PROPERTY LINE
- INC 1 SITE SCOPE OF WORK
- FOR REFERENCE: INC 2 SITE SCOPE OF WORK
- SAFE DISPERSAL AREA
- ACCESSIBLE PATH OF TRAVEL
- BARRIER-FREE ACCESSIBLE ROUTE WITHOUT ANY ABRUPT VERTICAL CHANGES EXCEEDING 1/2" BEVELED AT 1:2 MAXIMUM SLOPE, EXCEPT THAT LEVEL CHANGES DO NOT EXCEED 1/4" VERTICAL AND IS AT LEAST 48" WIDE. SURFACE IS SLIP RESISTANT, STABLE, FIRM, AND SMOOTH. CROSS-SLOPE DOES NOT EXCEED 2% AND SLOPE IN THE DIRECTION OF TRAVEL IS LESS THAN 5% UNLESS OTHERWISE INDICATED. P.O.T. SHALL MAINTAIN FREE OF OVERHANGING OBSTRUCTIONS TO 80" MINIMUM (11B-204 AND 11B-307).
- EGRESS ROUTE TO AREA OF SAFE DISPERSAL

IDENTIFICATION STAMP
DIV. OF THE STATE ARCHITECT
APP: 02-123848 INC: 01
REVIEWED FOR
SS ☑ FLS ☑ ACS ☑
DATE: 05/21/2026

LPA
ARCHITECTURE ENGINEERING INTERIOR DESIGN
LANDSCAPE ARCHITECTURE PLANNING
916-287-2400 Office
LPADesignStudios.com
431 I Street, Suite 107
Sacramento, California 95814

LICENSED ARCHITECT
JULIAN WATT
C-40596
17 DEC 2027
GENERAL
STATE OF CALIFORNIA

This document and all other project documents, ideas, aesthetics and designs incorporated therein are instruments of service. All project documents are copyright protected, are the property of LPA, Inc. (LPA) and cannot be lawfully used in whole or in part for any project or purpose except as set forth in the contractual agreement between LPA and its Client. The unauthorized disclosure and/or use of the project documents (including the creation of derivative works), may give rise to liability for copyright infringement, unlawful disclosure, use or misappropriation of property rights held by LPA. The unauthorized use of the project documents will give rise to the recovery of monetary losses and damages including attorney fees and costs for which the unauthorized user will be held liable.
Project documents describe the design intent of the work and are not a representation of as-built or existing conditions. LPA is not responsible for any discrepancies between the project documents and the existing conditions.

© LPA, Inc.

ELKHORN ELEMENTARY SCHOOL
CAMPUS MODERNIZATION INCREMENT 1

10505 DAVIS ROAD, STOCKTON, CA
95209

Developed for
LODI UNIFIED SCHOOL DISTRICT

Submittal	Date
100% SCHEMATIC DESIGN	08/29/2025
DSA SUBMITTAL	12/18/2025

Revision	Date

Job Number	31942
Checked By	Checker
Scale	As indicated

SITE ACCESSIBILITY PLAN

1G1.03

ABBREVIATIONS

GENERAL LIST: NOT ALL MAY APPLY.

AB	AGGREGATE BASE	MIN	MINIMUM
AC	ASPHALT CONCRETE PAVEMENT	MOC	MIDDLE OF CURVATURE
AE	ACCESS EASEMENT	N	NORTH
ASPH	ASPHALT PAVING	NG	NATURAL GRADE
BC	BEGIN CURVATURE	NTS	NOT TO SCALE
BCR	BEGIN CURB RETURN	OC	ON CENTER
BFP	BACK FLOW PREVENTER	(P)	PROPOSED, NEW
BI	BOX INLET	PA	PLANTING AREA
BM	BENCHMARK	PBC	PULL BOX CABLE
BOP	BOTTOM OF PIPE	PBE	PULL BOX ELECTRIC
BOR	BOTTOM OF RAMP	PBT	PULL BOX TELEPHONE
BS	BOTTOM OF STAIRS	PBW	PULL BOX WATER
BVC	BEGIN VERTICAL CURVATURE	PCC	POINT OF COMPOUND CURVATURE
BW	BOTTOM OF WALL	PE	PEDESTRIAN EASEMENT
C&G	CURB AND GUTTER	PI	POINT OF INTERSECTION
CL,CL	CENTER LINE	PIVC	POINT OF INTERSECTION VERTICAL CURVATURE
CB	CATCH BASIN	PL	PROPERTY LINE
CONST	CONSTRUCT	POC	POINT OF CONNECTION
CR	CURB RETURN	PP	POWER POLE
CT	COURT	PRC	POINT OF REVERSE CURVATURE
CUL	CULVERT	PVC	POLYVINYL CHLORIDE
DI	DROP INLET	PVMT	PAVEMENT
DIP	DUCTILE IRON PIPE	R	RADIUS
DW	DOMESTIC WATER	RCP	REINFORCED CONCRETE PIPE
D/W	DRIVEWAY	RIM	TOP RIM OF STRUCTURE
DE	DRAINAGE EASEMENT	ROW	HIGHWAY EASEMENT
DR	DRIVE	RT	RIGHT
(E)	EXISTING	RW	RECLAIMED WATER
E	EAST	R/W	RIGHT OF WAY
EC	END CURVATURE	S	SOUTH OR SLOPE
ECR	END CURB RETURN	SBE	SETBACK EASEMENT
EG	EXISTING GRADE	SCO	SANITARY SEWER CLEANOUT
ELEV	ELEVATION	SD	STORM DRAIN
EOC	EDGE OF CONCRETE	SDMH	STORM DRAIN MANHOLE
EP	EDGE OF PAVEMENT	SF	SQUARE FEET
EQ	EQUAL	SHT	SHEET
ESMT	EASEMENT	STA	STATION
EVC	END OF VERTICAL CURVATURE	SMH	SANITARY SEWER MANHOLE
FF	FINISHED FLOOR	SS	SANITARY SEWER
FFE	FINISHED FLOOR ELEVATION	SWPPP	STORM WATER POLLUTION PREVENTION PLAN
FG	FINISHED GRADE	S/W	SIDEWALK
FH	FIRE HYDRANT	T	TANGENT
FL	FLOWLINE	TB	TOP OF BERM
FS	FINISHED SURFACE	TBC	TOP BACK OF CURB
FW	FIRE PROTECTION SERVICE WATER	TBW	TOP BACK OF WALK
GB	GRADE BREAK	TC	TOP OF CURB
GFL	GUTTER FLOWLINE	TF	TOP OF FOOTING
GSL	LIMITS OF GRAVITY SEWER	TG	TOP OF GRATE
GR	GRATE	TOE	TOE OF SLOPE
GV	GAS VALVE	TOP	TOP OF PIPE
HB	HOSE BIB	TOR	TOP OF RAMP
HP	HIGH POINT	TOS	TOP OF SLOPE
ICV	IRRIGATION CONTROL VALVE	TP	TOP OF PLANTER
INTX	POINT OF INTERSECTION	TS	TOP OF STAIRS
INV	INVERT	TW	TOP OF WALL
JP	JOINT POLE	TYP	TYPICAL
LE	LANDSCAPE EASEMENT	TP	TELEPHONE POLE
LF	LINEAR FEET	VC	VERTICAL CURVATURE
LIP	LIP OF GUTTER	W	WEST
LP	LOW POINT	WM	WATER MAIN
LT	LEFT	WV	WATER VALVE
MAX	MAXIMUM		
MH	MANHOLE		

LEGEND

GENERAL LIST: NOT ALL MAY APPLY.

SYMBOL	DESCRIPTION
RD	ROOF DRAIN POC 5' FROM BUILDING
G	GAS POC 5' FROM BUILDING
F	FIRE WATER POC 5' FROM BUILDING
W	DOMESTIC WATER POC 5' FROM BUILDING
SS	SANITARY SEWER POC 5' FROM BUILDING
D	STORM DRAIN MANHOLE
S	SANITARY SEWER MANHOLE
	DRAIN INLET
AD	AREA DRAIN
	TRENCH DRAIN
	CLEANOUT
	BLOW OFF
	FIRE HYDRANT
	VALVE
	POST INDICATOR VALVE (PIV)/CHECK VALVE (CHK VLV)/FIRE DEPARTMENT CONNECTION (FDC)
	CHECK VALVE (CHK VLV)
	FIRE DEPARTMENT CONNECTION (FDC)
	DOUBLE DETECTOR CHECK (DBL CHK)
	REDUCED PRESSURE (BFP)
	POST INDICATOR VALVE (PIV)
	THRUST BLOCK
	BENDS, TEE AND CROSS
	WATER METER

LINE TYPE	DESCRIPTION
	APPROXIMATE PROJECT LIMITS
	RIGHT OF WAY/ PROPERTY LINE
—X—X—X—X—X—X—X—X—X—X—	FENCE
	REMOVE EXISTING UTILITY
SS	EXISTING SEWER LINE
W	EXISTING WATER LINE
SD	EXISTING STORM DRAIN LINE
FW	EXISTING DEDICATED PRIVATE FIRE SERVICE
G	EXISTING NATURAL GAS SERVICE
E	EXISTING ELECTRICAL LINE / CONDUIT
T	EXISTING TELECOMMUNICATIONS LINE / CONDUIT
XXLF 6"SS S=X.XXX	SANITARY SEWER LINE
XXLF 6"DW PVC	DOMESTIC WATER LINE
XXLF 6"SD S=X.XXX	STORM DRAIN LINE (<8" DIAMETER)
XXLF 12"SD S=X.XXX	STORM DRAIN LINE (>8" DIAMETER)
	PERFORATED STORM DRAIN LINE
XXLF 8"FW PVC	DEDICATED PRIVATE FIRE SERVICE
XXLF GAS PVC	NATURAL GAS LINE
GB	GRADE BREAK LINE
>	FLOW LINE
	DAYLIGHT LINE

GENERAL EROSION AND SEDIMENT CONTROL NOTES

1. CONTRACTOR SHALL ENSURE THAT THE CONSTRUCTION SITE IS PREPARED PRIOR TO THE START OF CONSTRUCTION. CONTRACTOR SHALL HAVE ALL EROSION AND SEDIMENT CONTROL MEASURES IN PLACE AT ALL TIMES DURING CONSTRUCTION.

2. ALL EROSION AND SEDIMENT CONTROL MEASURES SHALL BE MAINTAINED UNTIL DISTURBED AREAS ARE STABILIZED.

3. THIS PLAN MAY NOT COVER ALL THE SITUATIONS THAT ARISE DURING CONSTRUCTION DUE TO UNANTICIPATED FIELD CONDITIONS.

4. ALL EROSION AND SEDIMENT CONTROL MEASURES SHALL BE CHECKED BEFORE AND AFTER ALL STORMS TO ENSURE MEASURES ARE FUNCTIONING PROPERLY.

5. CONTRACTOR SHALL MAINTAIN A LOG AT THE SITE OF ALL INSPECTIONS OR MAINTENANCE OF BMPS, AS WELL AS, ANY CORRECTIVE CHANGES TO THE BMPS OR EROSION AND SEDIMENT CONTROL PLAN.

6. IN AREAS WHERE SOIL IS EXPOSED, PROMPT REPLANTING WITH NATIVE COMPATIBLE, DROUGHT-RESISTANT VEGETATION SHALL BE PERFORMED. NO AREAS WILL BE LEFT EXPOSED OVER THE WINTER SEASON.

7. THE CONTRACTOR SHALL INSTALL THE STABILIZED CONSTRUCTION ENTRANCE PRIOR TO COMMENCEMENT OF GRADING. LOCATION OF THE ENTRANCE MAY BE ADJUSTED BY THE CONTRACTOR TO FACILITATE GRADING OPERATIONS. ALL CONSTRUCTION TRAFFIC ENTERING THE PAVED ROAD MUST CROSS THE STABILIZED CONSTRUCTION ENTRANCE.

8. ALL SEDIMENT DEPOSITED ON PAVED ROADWAYS SHALL BE SWEPT AT THE END OF EACH WORKING DAY OR MORE OFTEN AS NECESSARY.

9. CONTRACTOR SHALL PLACE GRAVEL/SAND BAGS AROUND ALL NEW DRAINAGE STRUCTURE OPENINGS IMMEDIATELY AFTER THE STRUCTURE OPENING IS CONSTRUCTED. THESE GRAVEL/SAND BAGS SHALL BE MAINTAINED AND REMAIN IN PLACE UNTIL CONSTRUCTION IS COMPLETED.

10. CONTRACTOR SHALL IMPLEMENT HOUSEKEEPING PRACTICES AS FOLLOWS:

A. SOLID WASTE MANAGEMENT:
PROVIDE DESIGNATED WASTE COLLECTION AREAS AND CONTAINERS. ARRANGE FOR REGULAR REMOVAL AND DISPOSAL. CLEAR SITE OF TRASH INCLUDING ORGANIC DEBRIS, PACKAGING MATERIALS, SCRAP OR SURPLUS BUILDING MATERIALS AND DOMESTIC WASTE DAILY.

B. MATERIAL DELIVERY AND STORAGE:
PROVIDE A DESIGNATED MATERIAL STORAGE AREA WITH SECONDARY CONTAINMENT SUCH AS BERMING. STORE MATERIAL ON PALLETS AND PROVIDE COVERING FOR SOLUBLE MATERIALS. RELOCATE STORAGE AREA INTO BUILDING SHELL WHEN POSSIBLE. INSPECT AREA WEEKLY.

C. CONCRETE WASTE:
PROVIDE A DESIGNATED AREA FOR A TEMPORARY PIT TO BE USED FOR CONCRETE TRUCK WASH-OUT. CONCRETE WASHOUT CANNOT BE WITHIN 50' MINIMUM OF DRAIN INLETS. DISPOSE OF HARDENED CONCRETE OFFSITE. AT NO TIME SHALL A CONCRETE TRUCK DUMP ITS WASTE AND CLEAN ITS TRUCK INTO THE STORM DRAINS VIA CURB AND GUTTER. INSPECT DAILY TO CONTROL RUNOFF, AND WEEKLY FOR REMOVAL OF HARDENED CONCRETE.

D. PAINT AND PAINTING SUPPLIES:
PROVIDE INSTRUCTION TO EMPLOYEES AND SUBCONTRACTORS REGARDING REDUCTION OF POLLUTANTS INCLUDING MATERIAL STORAGE, USE, AND CLEAN UP. INSPECT SITE WEEKLY FOR EVIDENCE OF IMPROPER DISPOSAL.

E. VEHICLE FUELING, MAINTENANCE AND CLEANING:
PROVIDE A DESIGNATED FUELING AREA WITH SECONDARY CONTAINMENT SUCH AS BERMING. DO NOT ALLOW MOBILE FUELING OF EQUIPMENT. PROVIDE EQUIPMENT WITH DRIP PANS. RESTRICT ONSITE MAINTENANCE AND CLEANING OF EQUIPMENT TO A MINIMUM. INSPECT AREA WEEKLY.

F. HAZARDOUS WASTE MANAGEMENT:
PREVENT THE DISCHARGE OF POLLUTANTS FROM HAZARDOUS WASTES TO THE DRAINAGE SYSTEM THROUGH PROPER MATERIAL USE, WASTE DISPOSAL AND TRAINING OF EMPLOYEES. HAZARDOUS WASTE PRODUCTS COMMONLY FOUND ON-SITE INCLUDE BUT ARE NOT LIMITED TO PAINTS & SOLVENTS, PETROLEUM PRODUCTS, FERTILIZERS, HERBICIDES & PESTICIDES, SOIL STABILIZERS, STABILIZATION PRODUCTS, ASPHALT PRODUCTS AND CONCRETE CURING PRODUCTS.

11. NO GRADING SHALL BE DONE UNTIL SITE- AND SEASON-SPECIFIC SOIL LOSS AND HOUSEKEEPING STORMWATER BMPs HAVE BEEN APPROVED BY THE INSPECTOR. THE CONTRACTOR SHOULD EMPLOY THE DESIGN BMPs AND ANY OTHERS NEEDED AS SITUATIONS ARISE. CONTRACTOR SHOULD CONDUCT SITE INSPECTIONS BEFORE, DURING AND AFTER EACH EXTENDED STORM EVENT TO IDENTIFY CONDITIONS THAT MAY CONTRIBUTE TO EROSION AND SEDIMENT PROBLEMS OR ANY OTHER POLLUTANT DISCHARGES. IF ADDITIONAL CONTROL MEASURES ARE NEEDED, CONTRACTOR SHOULD IMPLEMENT THEM IMMEDIATELY.

POLLUTION PREVENTION NOTES

IN ORDER TO MEET THE REQUIREMENTS OF THE NATIONAL POLLUTANT DISCHARGE ELIMINATION SYSTEM (NPDES) PROGRAM FOR CONSTRUCTION, CONSTRUCTION CONTRACTORS SHALL INSTALL AND MAINTAIN APPROPRIATE BEST MANAGEMENT PRACTICES (BMPS), AS SHOWN IN THE EROSION CONTROL PLAN AND IN ACCORDANCE WITH THE SWPPP (STORM WATER POLLUTION PREVENTION PLAN), ON ALL CONSTRUCTION PROJECTS. BMPS SHALL BE INSTALLED IN ACCORDANCE WITH INDUSTRY RECOMMENDED STANDARDS, AND/OR IN ACCORDANCE WITH ANY GENERAL CONSTRUCTION PERMIT ISSUED BY THE STATE FOR THE PROJECT TO PREVENT ANY DISCHARGES FROM THE PROJECT SITE OR INTO ANY STORM DRAIN FACILITIES. ALL SEDIMENTS, CONSTRUCTION MATERIALS, DEBRIS AND WASTES, AND OTHER POLLUTANTS MUST BE RETAINED ON SITE AND MAY NOT BE TRANSPORTED FROM THE SITE VIA SHEET FLOW, SWALES, AREA DRAINS, NATURAL DRAINAGE COURSES, WIND, OR VEHICLE TRACKING. UNDER DIRECTION OF THE ENGINEER OF RECORD, EROSION AND/OR SEDIMENT CONTROL DEVICES SHALL BE MODIFIED AS NEEDED AS THE PROJECT PROGRESSES TO ENSURE EFFECTIVENESS.

BMP MAINTENANCE NOTES

1. FOLLOWING OWNER ACCEPTANCE OF CONSTRUCTION WORK, POST CONSTRUCTION BEST MANAGEMENT PRACTICE (BMP) MEASURES SHALL BE MAINTAINED BY THE PROPERTY OWNER, INCLUDING BUT NOT LIMITED TO:

1.1. ANNUAL INSPECTION, REPLACEMENT, AND/OR SEDIMENTATION REMOVAL OF VEGETATED SWALES, TREATMENT PONDS, AND OTHER SURFACE STORMWATER TREATMENT MEASURES AS REQUIRED WITH AN INCREASED FREQUENCY BASED ON SITE CONDITIONS.

1.2. MAINTENANCE SERVICE AGREEMENT(S) OF STORMWATER TREATMENT VAULTS, INLETS, MANHOLES, AND OTHER DEVICES BASED ON MANUFACTURES' RECOMMENDATIONS AND FREQUENCY.

1.3. ANNUAL INSPECTION OF PERMEABLE PAVEMENT AND REMOVAL OF SEDIMENT AS NEEDED.

1.4. ANNUAL INSPECTION OF STORMWATER INLETS AND MAINTENANCE AS REQUIRED TO CLEAR GRATES AND INLETS OF DEBRIS.

1.5. THE PROJECT STORMWATER POLLUTION PREVENTION PLAN (SWPPP) AND WATER QUALITY MANAGEMENT PLAN (WQMP) MAY CONTAIN ADDITIONAL OR MORE STRINGENT MAINTENANCE REQUIREMENTS.

2. BMP DETAILS MAY BE FOUND IN APPENDIX H OF THE PROJECT SWPPP DOCUMENT. BMP DETAILS PER CALIFORNIA STORMWATER QUALITY ASSOCIATION (CASQA) AND ARE AVAILABLE AT www.casqa.org.

3. FOR PROJECTS GREATER THAN 1 ACRE: THE CONTRACTOR SHALL VERIFY THE STATUS OF THE SWPPP/NOI/WDID PRIOR TO EARTHMOVING ACTIVITIES. A STORMWATER POLLUTION PREVENTION PLAN (SWPPP) SHALL BE PREPARED AND A NOTICE OF INTENT (NOI) SHALL BE FILED WITH THE STATE WATER RESOURCES CONTROL BOARD (SWRCB) IN ACCORDANCE WITH THE REQUIREMENTS OF CALIFORNIA GENERAL PERMIT FOR STORMWATER DISCHARGES ASSOCIATED WITH CONSTRUCTION ACTIVITY (PERMIT NO. CAS000002) FOR ALL OPERATIONS ASSOCIATED WITH THESE PLANS. THE CONTRACTOR SHALL KEEP A COPY OF THE SWPPP ON SITE AND AVAILABLE FOR REVIEW.

AREA SUMMARY

TOTAL DISTURBED AREA = 2.15± ACRES

DEMOLITION NOTES

1. THE INTENT OF THE DEMOLITION PLAN IS TO DESCRIBE IN GENERAL THE DEMOLITION AREAS AFFECTED BY THE PROJECT CONSTRUCTION. IT IS NOT INTENDED AS A DETAILED DESCRIPTION OF EXISTING ITEMS OR ELEMENTS TO BE REMOVED. THE CONTRACTOR SHALL VISIT THE SITE AND REVIEW ANY AVAILABLE RECORD DOCUMENTS TO BECOME FAMILIAR WITH THE EXISTING CONDITIONS AND SHOULD INCLUDE THE REMOVAL OF ALL ITEMS NECESSARY FOR THE PROPER EXECUTION AND COMPLETION OF THE WORK. THE CONTRACT DOCUMENTS ARE COMPLEMENTARY, AND WHAT IS REQUIRED BY ONE SHALL BE BINDING AS IF REQUIRED BY ALL TO THE EXTENT THAT IT IS REASONABLY INFERABLE FROM THEM AS BEING NECESSARY TO PRODUCE THE INTENDED RESULTS.

2. REMOVE EXISTING BUILDINGS, FOUNDATIONS AND SERVICE UTILITIES AS INDICATED ON PLANS. CAP ALL UTILITIES AT APPROPRIATE POINTS. ALL EXISTING ELECTRICAL / TELEPHONE / CATV UTILITIES SHALL BE REMOVED AS INDICATED OR BACK TO THE POINT WHERE THE SPECIFIC UTILITY SYSTEM ENTERS THE WORK AREA. COORDINATE DEMOLITION OF ALL UTILITIES WITH THE OWNER. ALL UTILITIES CONNECTED TO EXISTING BUILDINGS TO REMAIN SHALL CONTINUE TO BE OPERATIONAL DURING THE DEMOLITION PROCESS. DOMESTIC AND FIRE SERVICE WATER AND NATURAL GAS SHALL BE REMOVED TO A POINT OUTSIDE THE PERIMETER OF PROPOSED NEW CONSTRUCTION TO EXISTING VALVES OR SIMILAR SHUT-OFF DEVICES. IF A SHUT-OFF DEVICE IS NOT REASONABLY ADJACENT TO THE PERIMETER OF THE PROPOSED NEW CONSTRUCTION, PROVIDE A SHUT-OFF DEVICE IN BELOW-GRADE YARD BOX. CONFIRM LOCATION OF NEW DEVICES WITH OWNER PRIOR TO INSTALLATION. SANITARY SEWER AND STORM DRAINAGE SHALL BE CAPPED TO A POINT OUTSIDE THE PERIMETER OF THE PROPOSED NEW CONSTRUCTION. OTHER UTILITIES NOT SPECIFICALLY IDENTIFIED IN THESE DOCUMENTS AND NOT ANTICIPATED FOR REUSE SHALL BE REMOVED IN ENTIRETY.

3. FOR ALL EXISTING MATERIALS THAT CAN BE SALVAGED, OWNER HAS FIRST RIGHT OF REFUSAL FOR REMOVED ITEMS THAT MAY HAVE RESIDUAL COMMERCIAL OR HISTORIC VALUE INCLUDING HARDWARE, GLASS, CORNER STONES, TIME CAPSULES, LIGHT STANDARDS, SIGNS, FENCING, BENCHES, WATER FOUNTAINS, TRASH CONTAINERS, ETC. SHALL REMAIN AS PROPERTY OF THE OWNER. ALL ITEMS TO BE SALVAGED FOR REUSE/REINSTALLATION MUST MEET CURRENT CODE REQUIREMENTS. COORDINATE ITEMS TO BE RETAINED WITH OWNER AND REMOVE FROM CONSTRUCTION SITE TO A LOCATION APPROVED BY OWNER. REMOVED MATERIALS, NOT INDICATED OR DIRECTED TO BE SALVAGED FOR THE OWNER'S BENEFIT ARE DEBRIS AND BECOME THE CONTRACTOR'S PROPERTY UPON REMOVAL.

4. THE EXISTENCE AND LOCATION OF ANY UNDERGROUND UTILITY PIPES OR STRUCTURES SHOWN ON THESE PLANS ARE OBTAINED BY SEARCH OF THE AVAILABLE RECORDS AND FIELD SURVEYS. THE CONTRACTOR SHALL CONTACT UNDERGROUND SERVICE ALERT, UTILITY COMPANIES, AND/OR FIELD VERIFY AND LOCATE ALL UTILITIES BEFORE PROCEEDING WITH WORK. THE CONTRACTOR IS ALSO REQUIRED TO TAKE DUE PRECAUTIONARY MEASURES TO PROTECT THE UTILITY LINES SHOWN AND ANY OTHER LINES NOT OF RECORD OR NOT SHOWN ON THESE PLANS. NOTIFY THE ENGINEER IF ADDITIONAL UTILITIES ARE LOCATED OR IF CONFLICTS ARE FOUND WITH EXISTING CONDITIONS.

5. ALL TREES TO BE REMOVED SHALL BE MARKED BY CONTRACTOR AND APPROVED FOR REMOVAL BY THE OWNER OR OWNER'S REPRESENTATIVE PRIOR TO REMOVING OR CUTTING TREE(S). EXISTING ROOTS SHALL BE GRINDED TO A DEPTH OF APPROXIMATELY 3-FEET. USE CAUTION WHILE GRINDING WHEN EXISTING UTILITIES ARE IN CLOSE PROXIMITY TO TREES. ALL TREES TO REMAIN WITHIN THE LIMIT OF WORK SHALL BE PROTECTED AND MAINTAINED PER SPECIFICATIONS AND DETAILS.

6. SAWCUT EXISTING CONCRETE AND ASPHALT TO AN EXISTING CONTROL JOINT WHERE POSSIBLE. AT MINIMUM TO A NEAT-STRAIGHT LINE. ALL DEBRIS SHALL BE HAULED OFFSITE TO A LEGAL DUMPING SITE OR SALVAGED FOR REUSE ON PROJECT AS NOTED.

7. WORK WITHIN CITY, COUNTY, OR STATE RIGHT-OF-WAY REQUIRES A SEPARATE ENCROACHMENT PERMIT WHICH THE CONTRACTOR IS RESPONSIBLE FOR OBTAINING PRIOR TO STARTING WORK WITHIN RIGHT-OF-WAY.

8. CONTRACTOR TO COORDINATE UTILITY DEMOLITION WITH DRAINAGE AND UTILITY WORK SHOWN IN THIS PLAN SET. ALL UTILITY SHUTDOWNS SHALL BE COORDINATED PER PROJECT SPECIFICATIONS.

9. EXISTING DRY UTILITIES SHOWN FOR DEMOLITION ARE SHOWN FOR COORDINATION ONLY. REFER TO OTHER DISCIPLINES FOR LIMITS AND DETAILS OF DEMOLITION.

10. THE CONTRACTOR SHALL RECYCLE CONSTRUCTION DEBRIS, ASPHALT, AND CONCRETE GENERATED FROM REMOVALS REQUIRED TO CONSTRUCT THE PROJECT. THE CONTRACTOR IS OBLIGATED, UNDER THIS CONTRACT, TO RECYCLE THE WASTE MATERIAL THROUGH AN APPROVED RECYCLING PLANT.

11. A LIST OF FACILITIES THAT ACCEPT CONSTRUCTION & DEMOLITION DEBRIS CAN BE FOUND ON THE CALRECYCLE WEBSITE AT: HTTPS://WWW.CALRECYCLE.CA.GOV/CONDEMO

12. CONTRACTOR IS RESPONSIBLE FOR PROTECTING EXISTING BUILDING FINISHES DURING DEMOLITION. ANY FINISH THAT IS DAMAGED DURING DEMOLITION SHALL BE REPAIRED OR REPLACED IN-KIND OR BETTER.

GENERAL NOTES TO CONTRACTOR

1. THE CONTRACTOR SHALL CONTACT THE RESPECTIVE UTILITY OWNERS FOR LOCATION, REMOVAL, AND/OR RELOCATION OF ANY UTILITY SERVICES AFFECTED BY CONSTRUCTION. THE CONTRACTOR SHALL TAKE ALL NECESSARY PRECAUTIONARY MEASURES TO PROTECT UNDERGROUND OR OVERHEAD STRUCTURES WHETHER OR NOT THEY ARE SHOWN ON THESE DRAWINGS.

2. THE CONTRACTOR SHALL NOTIFY THE PROJECT INSPECTOR AND THE RESPECTIVE UTILITY OWNERS AND OTHER AGENCIES AT LEAST TWO WORKING DAYS PRIOR TO START OF CONSTRUCTION.

3. THE CONTRACTOR SHALL BE RESPONSIBLE FOR EXPOSING, VERIFYING LOCATIONS (BOTH HORIZONTAL AND VERTICAL), AND MAINTAINING ALL EXISTING UNDERGROUND UTILITIES, BOTH SHOWN ON THE PLANS AND/OR NOT SHOWN ON THE PLANS DURING CONSTRUCTION. REPAIR DAMAGED UTILITIES TO THE SATISFACTION OF THE ENGINEER. THE CONTRACTOR SHALL LOCATE EXISTING UNDERGROUND UTILITIES SUFFICIENTLY AHEAD OF CONSTRUCTION TO PERMIT REVISIONS TO PLANS BECAUSE OF LOCATIONS OF EXISTING FACILITIES AND SHALL REPORT ALL DISCREPANCIES TO THE ENGINEER PRIOR TO THE COMMENCEMENT OF WORK.

4. THE EXISTENCE AND LOCATION OF ANY UNDERGROUND UTILITIES AND/OR STRUCTURES SHOWN ON THESE PLANS WERE OBTAINED BY A SEARCH OF THE AVAILABLE RECORDS. APPROVAL OF THESE PLANS DOES NOT CONSTITUTE A REPRESENTATION AS TO THE ACCURACY OR COMPLETENESS OF THE LOCATION OR THE EXISTENCE, OR NON-EXISTENCE OF ANY UTILITY AND/OR STRUCTURE WITHIN THE LIMITS OF THIS PROJECT. THE CONTRACTOR IS REQUIRED TO TAKE ALL DUE PRECAUTIONARY MEASURES TO PROTECT THE UTILITIES OF RECORD AND/OR NOT OF RECORD SHOWN OR NOT SHOWN AND ANY OTHER LINE(S) OR STRUCTURE(S) NOT SHOWN ON THESE PLANS. THE CONTRACTOR IS RESPONSIBLE FOR THE PROTECTION OF, AND/OR DAMAGE TO THESE LINE(S) AND/OR STRUCTURE(S).

5. THE CONTRACTOR SHALL BE RESPONSIBLE FOR TEMPORARY SHORING AT PROPOSED BUILDING FOUNDATIONS, FOOTINGS, AND WALLS TO PROTECT EXISTING UTILITIES IN PLACE.

6. UNAUTHORIZED CHANGES AND USES - CAUTION: THE ENGINEER PREPARING THESE PLANS WILL NOT BE RESPONSIBLE FOR, OR LIABLE FOR, UNAUTHORIZED CHANGES TO OR USES OF THESE PLANS. ALL CHANGES TO THE PLANS MUST BE IN WRITING AND MUST BE APPROVED BY THE PREPARER OF THESE PLANS.

7. THE CONTRACTOR SHALL MAINTAIN THE EXISTING ACCESSIBLE ROUTE CLEAR OR PROVIDE AN ALTERNATE ACCESSIBLE ROUTE OF TRAVEL DURING DEMOLITION AND/OR CONSTRUCTION.

8. THE CONTRACTOR SHALL MAINTAIN THE EXISTING FIRE EXITS AND STAIRS CLEAR AND USABLE OR PROVIDE ALTERNATE FIRE EXITS DURING DEMOLITION AND/OR CONSTRUCTION.

EARTHWORK NOTES

1. IT IS THE CONTRACTOR'S RESPONSIBILITY TO REVIEW THE GRADING PLANS AND SOILS REPORT THOROUGHLY PRIOR TO SITE MOBILIZATION. IT IS ALSO THE GRADING CONTRACTOR'S RESPONSIBILITY TO NOTIFY THE CIVIL AND SOILS ENGINEERS IF ONSITE DISCREPANCIES ARE OBSERVED THAT WOULD AFFECT THE EARTHWORK QUANTITIES.

2. THE EXISTING TOPOGRAPHY AS DELINEATED ON THESE DRAWINGS SHALL BE UTILIZED AS THE BASIS FOR ALL EARTHWORK COMPUTATIONS. SAID TOPOGRAPHY SHALL BE PRESUMED TO BE ACCEPTABLE TO ALL INTERESTED PARTIES UNLESS A DEVIATION IS FOUND PRIOR TO THE START OF GRADING IN ANY SPECIFIC AREAS. ANY DEVIATION SO DETERMINED SHALL BE PROMPTLY TRANSMITTED TO ALL INTERESTED PARTIES.

3. THE CONTRACTOR IS REQUIRED TO ESTIMATE THE QUANTITIES OF GRADING WORK TO BE DONE AND INCLUDE ALL COSTS THEREFROM WITH HIS BID, AS NO ADDITIONAL ALLOWANCE WILL BE MADE WITHOUT PRIOR CONSENT FROM THE OWNER.

4. OVER-EXCAVATION AND/OR EXCESS BACKFILLING OR DUPLICATION OF GRADING ACTIVITIES IS NOT A BASIS FOR ADDITIONAL COMPENSATION. THIS ALSO APPLIES WHERE MATERIAL IS TO BE REMOVED AND REPLACED TO REDUCE MOISTURE CONTENT.

5. OFF-SITE DISPOSAL OF EXCAVATION MATERIAL IS THE RESPONSIBILITY OF THE CONTRACTOR AND SHALL BE INCLUDED IN THE BID. THE CONTRACTOR SHALL HOLD THE OWNER AND ENGINEER HARMLESS AS A RESULT OF ANY CLAIMS ARISING FROM THE ACTIONS ENROUTE OR AWAY FROM THE SITE.

6. EARTH VOLUMES SHOWN HEREON ARE ESTIMATES BASED UPON THE GEOTECHNICAL ANALYSIS PERFORMED BY THE NAMED SOILS ENGINEER AND TOPOGRAPHIC SURVEY OF THE EXISTING GROUND SURFACE AT THE TIME OF PLAN PREPARATION. EARTHWORK VOLUMES ARE COMPUTED BY METHODS COMMONLY USED IN STANDARD ENGINEERING PRACTICE, AND ARE INTENDED FOR USE IN ESTABLISHING GOVERNING AGENCY FEES. ACTUAL FIELD CONDITIONS MAY VARY FROM OBSERVED OR MEASURED CONDITIONS AT THE TIME OF PLAN PREPARATION. EARTHWORK QUANTITIES MAY VARY AS A RESULT.

7. ANY EXPORT OR IMPORT REQUIRED TO BALANCE THE SITE SHALL BE THE SOLE RESPONSIBILITY OF THE CONTRACTOR.

8. PAVEMENT AND SUBGRADE RECOMMENDATIONS RELATED TO OVER-EXCAVATION, PAVEMENT SUBGRADE, ETC., PER GEOTECHNICAL REPORT:

a. FILL PLACED BELOW BUILDINGS SHOULD CONSIST OF NON-EXPANSIVE, IMPORTED SOILS, AND SHOULD EXTEND AT LEAST 5 FEET BEYOND OUTER EDGE OF BUILDING FOUNDATIONS AND AT LEAST 2 FEET BEYOND ADJACENT EXTERIOR PAVEMENTS AS REQUIRED PER SUBSECTION "ENGINEERED FILL CONSTRUCTION" UNDER SECTION "RECOMMENDATIONS" OF THE "GEOLOGIC HAZARDS AND GEOTECHNICAL ENGINEERING REPORT" DATED JUNE 6, 2025, BY MID PACIFIC ENGINEERING, INC. (MPE).

b. SUBGRADE BELOW BUILDING PADS AND EXTERIOR PAVEMENTS SHOULD BE PREPARED AS REQUIRED PER SUBSECTION "ENGINEERED FILL CONSTRUCTION" UNDER SECTION "RECOMMENDATIONS" OF THE "GEOLOGIC HAZARDS AND GEOTECHNICAL ENGINEERING REPORT" DATED JUNE 6, 2025, BY MID PACIFIC ENGINEERING, INC. (MPE).

c. SOILS BELOW BUILDING PADS SHOULD BE OVER-EXCAVATED TO 5 FEET BEYOND THE PERIMETER OF THE BUILDING AND TO A DEPTH EQUAL TO THE BOTTOMS OF PROPOSED FOUNDATIONS OR 2 FEET BELOW EXISTING SITE GRADES WHICHEVER IS DEEPER, AND SUBGRADES BELOW EXCAVATIONS AND SUB-EXCAVATIONS SHOULD BE PREPARED AS REQUIRED PER SUBSECTION "SITE PREPARATION AND OVER-EXCAVATION" UNDER SECTION "RECOMMENDATIONS" OF THE "GEOLOGIC HAZARDS AND GEOTECHNICAL ENGINEERING REPORT" DATED JUNE 6, 2025, BY MID PACIFIC ENGINEERING, INC. (MPE).

GEOTECHNICAL INFORMATION

FOR SITE PREPARATION, OVEREXCAVATION, FOUNDATION RECOMMENDATIONS, PAVEMENT, SUBGRADE, AND GRADATION REQUIREMENTS SEE GEOTECHNICAL INVESTIGATION REPORT ENTITLED:

"GEOLOGIC HAZARDS AND GEOTECHNICAL ENGINEERING REPORT
ELKHORN ELEMENTARY SCHOOL
NEW CLASSROOM BUILDING AND REMODELING"

PREPARED BY: MID PACIFIC ENGINEERING, INC.
840 EMBARCADERO DRIVE
SUITE 20
WEST SACRAMENTO, CA 95605

PROJECT NO: 06317-03

DATED: JUN 06, 2025

"SUPPLEMENTAL RECOMMENDATIONS LETTER
ELKHORN ELEMENTARY SCHOOL
NEW CLASSROOM BUILDING AND REMODELING"

PREPARED BY: MID PACIFIC ENGINEERING, INC.
840 EMBARCADERO DRIVE
SUITE 20
WEST SACRAMENTO, CA 95605

PROJECT NO: 06317-03

DATED: APRIL 8, 2026

EARTHWORK QUANTITIES

APPROXIMATE CUT: 175 CY

APPROXIMATE FILL: 1,800 CY

NOTE:
EARTHWORK QUANTITIES INDICATED ARE FOR REFERENCE ONLY (NOT FOR BID OR PAYMENT). THE CONTRACTOR IS RESPONSIBLE FOR ACTUAL QUANTITIES.

HAUL ROUTE TO BE DETERMINED AT PRE-GRADE MEETING AND ALL NECESSARY PERMITS SHALL BE OBTAINED BY THE GENERAL CONTRACTOR

BENCHMARK

SAN JOAQUIN COUNTY BRASS DISK IN MONUMENT WELL MARKING THE EAST ONE - QUARTER (1/4) CORNER OF SECTION 5, TOWNSHIP 2 NORTH, RANGE 6 EAST, DAVIS RD. BRASS DISK MARKS COS IN-9.

FIRE PROTECTION SYSTEM NOTES

1. PRIOR TO INSTALLATION, ALL PLANS AND SPECIFICATIONS SHALL BE APPROVED BY GOVERNING AGENCY.

2. INSPECTIONS ARE REQUIRED:
1) PRIOR TO POURING THRUST BLOCKS
2) FOR HYDROSTATIC TESTING
3) FOR FLUSH

3. INSTALLATION, INSPECTION, AND TESTING SHALL CONFORM TO 2022 NFPA 13 AND 2022 NFPA 24.

4. PRIVATE FIRE HYDRANTS SHALL BE APPROVED WET BARREL STYLE WITH A MINIMUM OF ONE 2 1/2" AND ONE 4" OUTLET. THE 4" OUTLET SHALL FACE THE FIRE DEPARTMENT ACCESS ROAD. ALL OUTLETS SHALL BE PROVIDED WITH NATIONAL STANDARD THREADS (NST).

5. FIRE HYDRANT SUPPLY PIPING SHALL BE A MINIMUM OF SIX INCHES IN DIAMETER. THE LOWEST OPERATING NUT SHALL BE MINIMUM OF 18" ABOVE GRAD

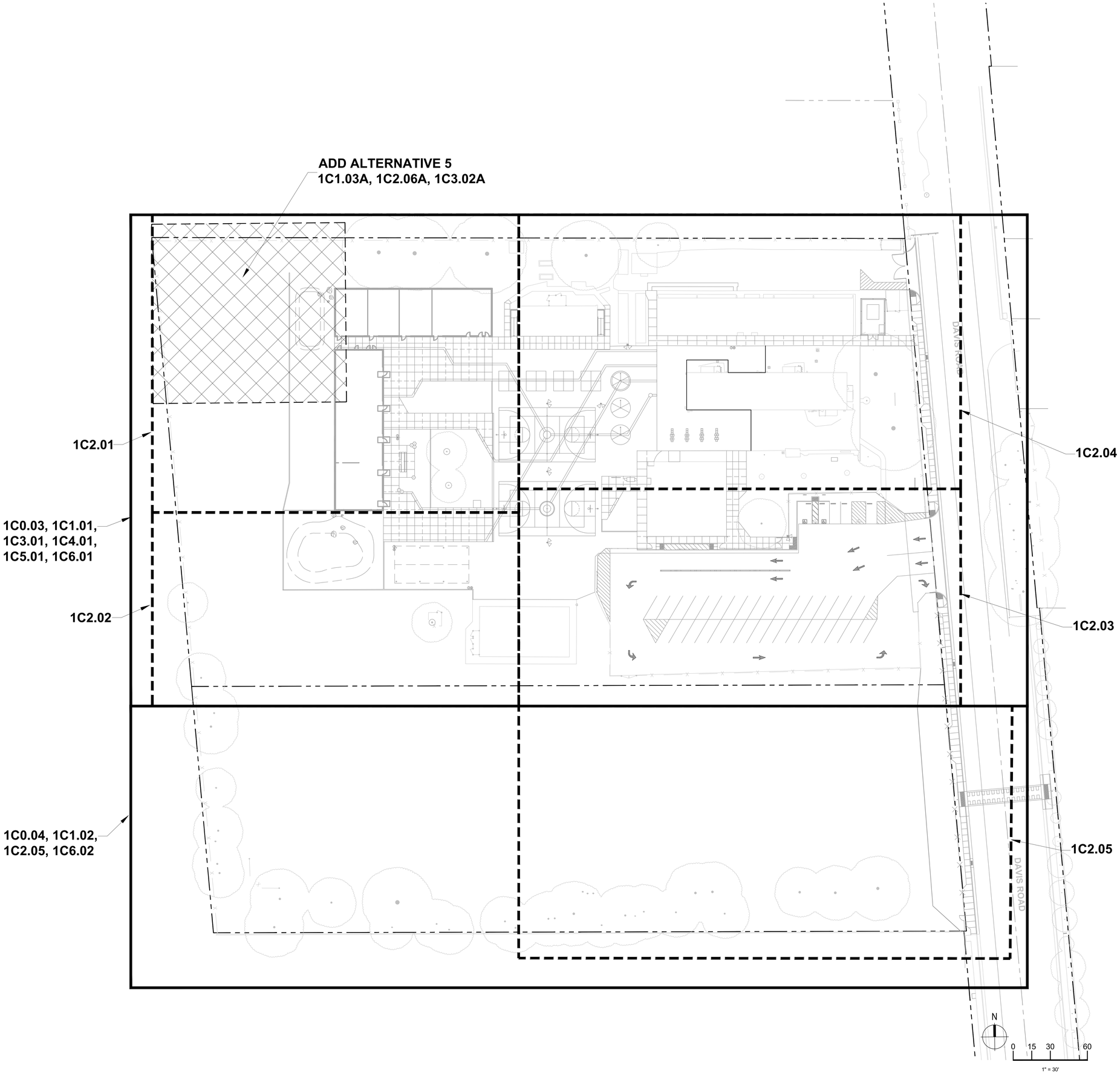

IDENTIFICATION STAMP
DIV. OF THE STATE ARCHITECT
APP: 02-123848 INC: 01
REVIEWED FOR
SS ☑ FLS ☑ ACS ☑
DATE: 05/21/2026

LPA

ARCHITECTURE ENGINEERING INTERIOR DESIGN
LANDSCAPE ARCHITECTURE PLANNING

949-261-1001 Office

LPADesignStudios.com

5301 California Avenue, Suite 100
Irvine, California 92617

REGISTERED PROFESSIONAL ENGINEER
KATHLEEN M. SHANAY
R.C.E. 68369
EXP. 9-30-27
STATE OF CALIFORNIA
CIVIL

This document and all other project documents, ideas, aesthetics and designs incorporated therein are instruments of service. All project documents are copyright protected, are the property of LPA, Inc. (LPA) and cannot be lawfully used in whole or in part for any project or purpose except as set forth in the contractual agreement between LPA and its Client. The unauthorized disclosure and/or use of the project documents (including the creation of derivative works), may give rise to liability for copyright infringement, unlawful disclosure, use or misappropriation of property rights held by LPA. The unauthorized use of the project documents will give rise to the recovery of monetary losses and damages including attorney fees and costs for which the unauthorized user will be held liable.
Project documents describe the design intent of the work and are not a representation of as-built or existing conditions. LPA is not responsible for any discrepancies between the project documents and the existing conditions.

© LPA, Inc.

ELKHORN ELEMENTARY SCHOOL
CAMPUS MODERNIZATION INCREMENT 1

10505 DAVIS ROAD, STOCKTON, CA 95209

Developed for
LODI UNIFIED SCHOOL DISTRICT

Revision	Date

Submittal	Date
75% SCHEMATIC DESIGN	08/21/2025
DSA SUBMITTAL	12/18/2025

Job Number	31942
Checked By	CD
Scale	1" = 30'

KEY MAP

1C0.02

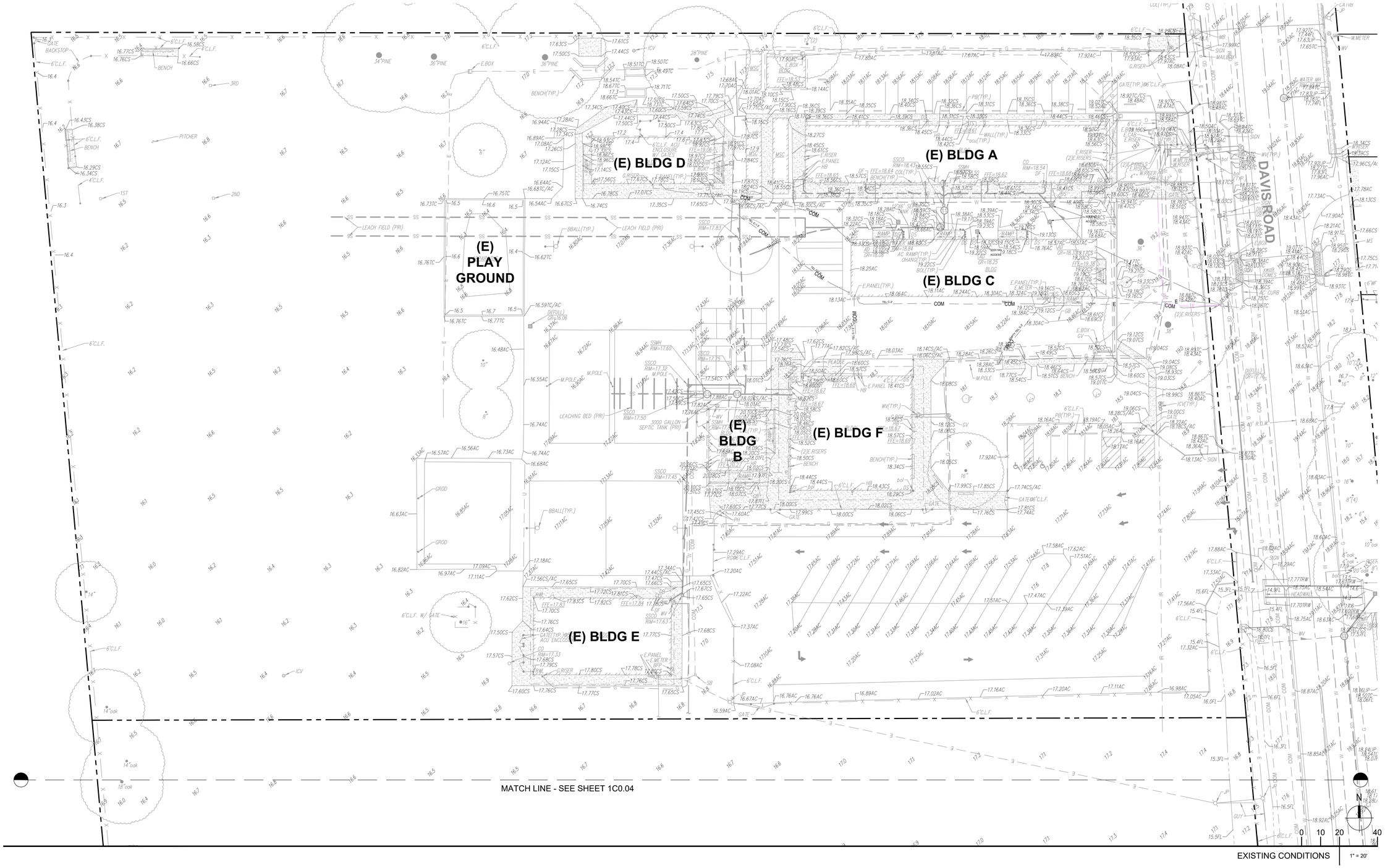

IDENTIFICATION STAMP
DIV. OF THE STATE ARCHITECT
APP: 02-123848 INC: 01
REVIEWED FOR
SS ☑ FLS ☑ ACS ☑
DATE: 05/21/2026

LPA

ARCHITECTURE ENGINEERING INTERIOR DESIGN
LANDSCAPE ARCHITECTURE PLANNING

949-261-1001 Office

LPADesignStudios.com

5301 California Avenue, Suite 100
Irvine, California 92617

REGISTERED PROFESSIONAL ENGINEER
KATHLEEN M. SHINAN
R.C.E. 68369
EXP. 9-30-27
STATE OF CALIFORNIA

This document and all other project documents, ideas, aesthetics and designs incorporated therein are instruments of service. All project documents are copyright protected, are the property of LPA, Inc. (LPA) and cannot be lawfully used in whole or in part for any project or purpose except as set forth in the contractual agreement between LPA and its Client. The unauthorized disclosure and/or use of the project documents (including the creation of derivative works), may give rise to liability for copyright infringement, unlawful disclosure, use or misappropriation of property rights held by LPA. The unauthorized use of the project documents will give rise to the recovery of monetary losses and damages including attorney fees and costs for which the unauthorized user will be held liable.
Project documents describe the design intent of the work and are not a representation of as-built or existing conditions. LPA is not responsible for any discrepancies between the project documents and the existing conditions.

© LPA, Inc.

ELKHORN ELEMENTARY SCHOOL CAMPUS MODERNIZATION INCREMENT 1

10505 DAVIS ROAD, STOCKTON, CA 95209

Developed for
LODI UNIFIED SCHOOL DISTRICT

Revision	Date

Submittal	Date
75% SCHEMATIC DESIGN	08/21/2025
DSA SUBMITTAL	12/18/2025

Job Number	31942
Checked By	CD
Scale	1" = 20'

EXISTING CONDITIONS

1C0.03

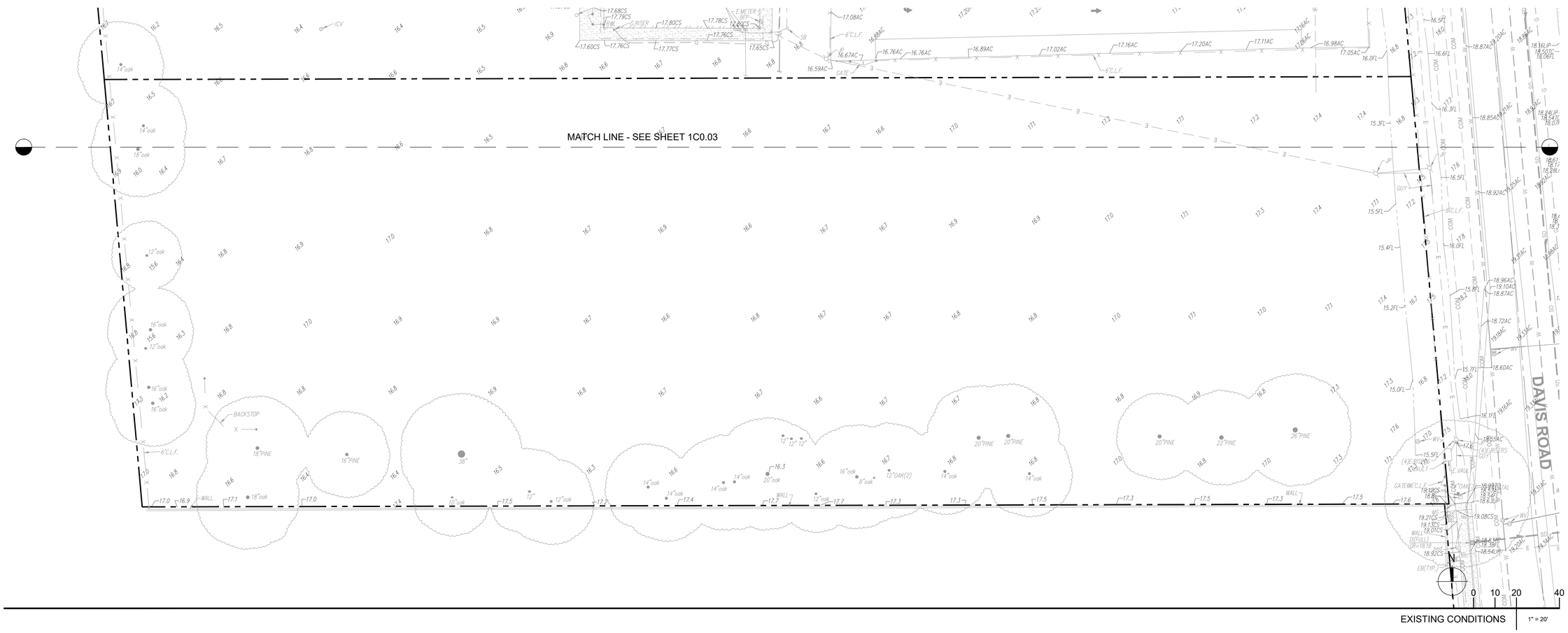

EXISTING CONDITIONS 1" = 20'

IDENTIFICATION STAMP
DIV. OF THE STATE ARCHITECT
APP: 02-123848 INC: 01
REVIEWED FOR
SS ☑ FLS ☑ ACS ☑
DATE: 05/21/2026

LPA

ARCHITECTURE ENGINEERING INTERIOR DESIGN
LANDSCAPE ARCHITECTURE PLANNING

949-261-1001 Office

LPADesignStudios.com

5301 California Avenue, Suite 100
Irvine, California 92617

REGISTERED PROFESSIONAL ENGINEER
KATHLEEN M. SWANAT
R.C.E. 68369
EXP. 9-30-27
CIVIL
STATE OF CALIFORNIA

This document and all other project documents, ideas, aesthetics and designs incorporated therein are instruments of service. All project documents are copyright protected, are the property of LPA, Inc. (LPA) and cannot be lawfully used in whole or in part for any project or purpose except as set forth in the contractual agreement between LPA and its Client. The unauthorized disclosure and/or use of the project documents (including the creation of derivative works), may give rise to liability for copyright infringement, unlawful disclosure, use or misappropriation of property rights held by LPA. The unauthorized use of the project documents will give rise to the recovery of monetary losses and damages including attorney fees and costs for which the unauthorized user will be held liable.
Project documents describe the design intent of the work and are not a representation of as-built or existing conditions. LPA is not responsible for any discrepancies between the project documents and the existing conditions.

© LPA, Inc.

ELKHORN ELEMENTARY SCHOOL
CAMPUS MODERNIZATION INCREMENT 1

10505 DAVIS ROAD, STOCKTON, CA 95209

Developed for
LODI UNIFIED SCHOOL DISTRICT

Revision	Date

Submittal	Date
75% SCHEMATIC DESIGN	08/21/2025
DSA SUBMITTAL	12/18/2025

Job Number	31942
Checked By	CD
Scale	1" = 20'

EXISTING CONDITIONS

1C0.04

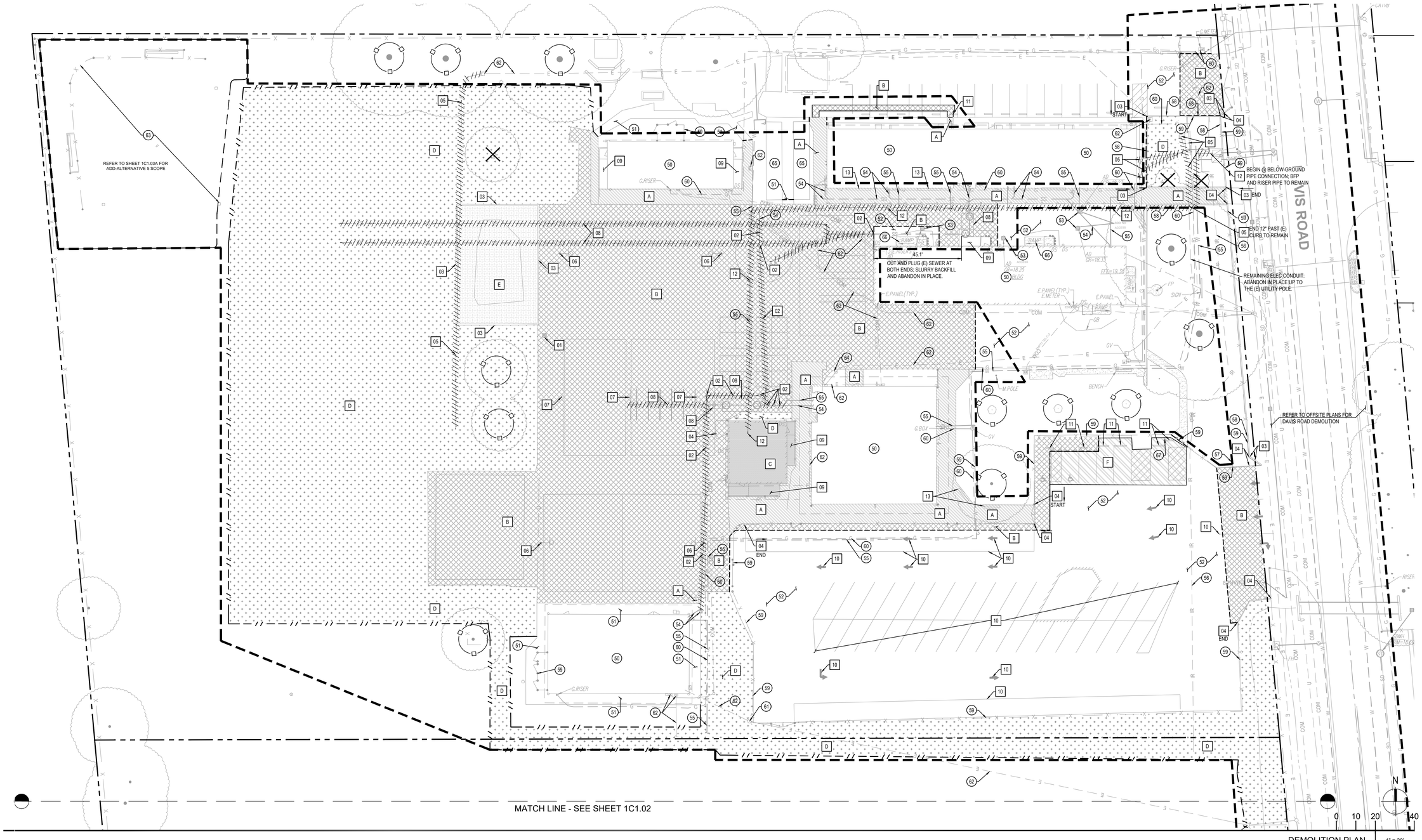

DEMOLITION PLAN 1" = 20'

PROTECTION KEYNOTES

KEY NOTE	DESCRIPTION
50	PROTECT (E) BUILDING, FOUNDATION AND OTHER STRUCTURAL FEATURES AND BUILDING UTILITIES.
51	PROTECT (E) CONCRETE PAVEMENT/SIDEWALK.
52	PROTECT (E) AC PAVEMENT.
53	PROTECT (E) STORM DRAIN FACILITIES.
54	PROTECT (E) SANITARY SEWER FACILITIES.
55	PROTECT (E) WATER SERVICE FACILITIES.
56	PROTECT (E) IRRIGATION FACILITIES.
57	PROTECT (E) MONUMENT AND/OR SIGN POST.
58	PROTECT (E) CURB.
59	PROTECT (E) FENCE AND/OR GATE.
60	PROTECT (E) GAS FACILITIES.
61	PROTECT (E) UTILITY POLE AND UTILITY LINES.
62	PROTECT (E) ELECTRICAL / TELECOM FACILITIES.
63	PROTECT (E) BALLFIELD COMPONENTS, INCLUDED BUT NOT LIMITED TO FENCING, SURFACE MATERIALS/TURF, BASES, ETC.
64	PROTECT (E) PLAQUE AND CONCRETE MOUNTING BLOCK IN PLACE.
65	PROTECT (E) SHIPPING STORAGE CONTAINERS.
66	PROTECT (E) RAMP AND HANDRAILS. WHERE SHOWN PER PLAN, PROTECT (E) BOLLARDS ADJACENT TO THE RAMP.
67	PROTECT (E) MAILBOX.

DEMOLITION KEYNOTES

KEY NOTE	DESCRIPTION
01	REMOVE (E) STORM DRAIN PIPE AND APPURTENANCES. SEE STORM DRAIN PLAN FOR IMPROVEMENTS.
02	REMOVE (E) SANITARY SEWER PIPE AND APPURTENANCES. SEE UTILITY PLAN FOR IMPROVEMENTS.
03	REMOVE (E) CURB.
04	REMOVE (E) FENCE, GATE, AND FOOTINGS, SEE LANDSCAPE PLANS FOR IMPROVEMENTS.
05	REMOVE (E) ELECTRICAL CONDUITS AND EQUIPMENT. SEE ELECTRICAL PLANS FOR IMPROVEMENTS.
06	REMOVE (E) BASKETBALL HOOP, POST AND FOUNDATION.
07	REMOVE (E) POLE AND FOUNDATION.
08	REMOVE (E) SANITARY SEWER SEPTIC TANK AND LEACH FIELDS.
09	REMOVE (E) RAMP AND HANDRAILS. WHERE SHOWN PER PLAN, REMOVE EXISTING BOLLARDS ADJACENT TO THE RAMP.
10	REMOVE (E) STRIPING BY SANDBLASTING OR OTHER APPROVED METHODS.
11	REMOVE (E) WHEELSTOP.
12	REMOVE (E) WATER PIPE AND APPURTENANCES. SEE UTILITY PLAN FOR IMPROVEMENTS.
13	REMOVE (E) BENCH AND SUPPORT POSTS.

DEMOLITION LEGEND

LABEL	DESCRIPTION
A	REMOVE (E) CONCRETE PAVEMENT/SIDEWALK AND BASE MATERIAL;, SEE DEMOLITION NOTE 10 SHEET 1C0.01.
B	REMOVE (E) AC PAVEMENT AND BASE MATERIAL, SEE DEMOLITION NOTE 10 SHEET 1C0.01.
C	REMOVE (E) BUILDING STRUCTURE AND FOUNDATIONS; SEE DEMOLITION NOTE 2 SHEET 1C0.01.
D	REMOVE (E) LANDSCAPING AND/OR TURF AREAS. SEE LANDSCAPE AND IRRIGATION PLANS FOR IMPROVEMENTS.
E	REMOVE (E) PLAYGROUND SURFACE MATERIAL (AND BASE MATERIAL IF PRESENT).
F	GRIND AREA: REMOVE UPPER 1 INCH OF (E) ASPHALT PAVEMENT. PROTECT REMAINDER OF ASPHALT PAVEMENT AND BASE MATERIAL IN PLACE.
	REMOVE (E) TREE, SEE DEMOLITION NOTE 5 SHEET 1C0.01.
	(E) TREE TO REMAIN AND BE PROTECTED, SEE DEMOLITION NOTE 5 SHEET 1C0.01.
	SAWCUT (E) PAVEMENT AS NEEDED. SEE DEMOLITION NOTE 6 AND 10 SHEET 1C0.01.
	APPROXIMATE LIMIT OF WORK LINE.
	REMOVE (E) UTILITY, SEE DEMOLITION NOTES 2, 4, 8, AND 9 SHEET 1C0.01.

DEMOLITION NOTES

-SEE DEMOLITION NOTES, SHEET 1C0.01.

IDENTIFICATION STAMP
DIV. OF THE STATE ARCHITECT
APP: 02-123848 INC: 01
REVIEWED FOR
SS ☑ FLS ☑ ACS ☑
DATE: 05/21/2026

LPA

ARCHITECTURE ENGINEERING INTERIOR DESIGN
LANDSCAPE ARCHITECTURE PLANNING

949-261-1001 Office

LPADesignStudios.com

5301 California Avenue, Suite 100
Irvine, California 92617

REGISTERED PROFESSIONAL ENGINEER
KATHLEEN M. SHINAT
R.C.E. 68369
EXP. 9-30-27
STATE OF CALIFORNIA
CIVIL

This document and all other project documents, ideas, aesthetics and designs incorporated therein are instruments of service. All project documents are copyright protected, are the property of LPA, Inc. (LPA) and cannot be lawfully used in whole or in part for any project or purpose except as set forth in the contractual agreement between LPA and its Client. The unauthorized disclosure and/or use of the project documents (including the creation of derivative works), may give rise to liability for copyright infringement, unlawful disclosure, use or misappropriation of property rights held by LPA. The unauthorized use of the project documents will give rise to the recovery of monetary losses and damages including attorney fees and costs for which the unauthorized user will be held liable.
Project documents describe the design intent of the work and are not a representation of as-built or existing conditions. LPA is not responsible for any discrepancies between the project documents and the existing conditions.

© LPA, Inc.

ELKHORN ELEMENTARY SCHOOL
CAMPUS MODERNIZATION INCREMENT 1

10505 DAVIS ROAD, STOCKTON, CA 95209

Developed for
LODI UNIFIED SCHOOL DISTRICT

Revision	Date

Submittal	Date
75% SCHEMATIC DESIGN	08/21/2025
DSA SUBMITTAL	12/18/2025

Job Number	31942
Checked By	CD
Scale	1" = 20'

DEMOLITION PLAN

1C1.01

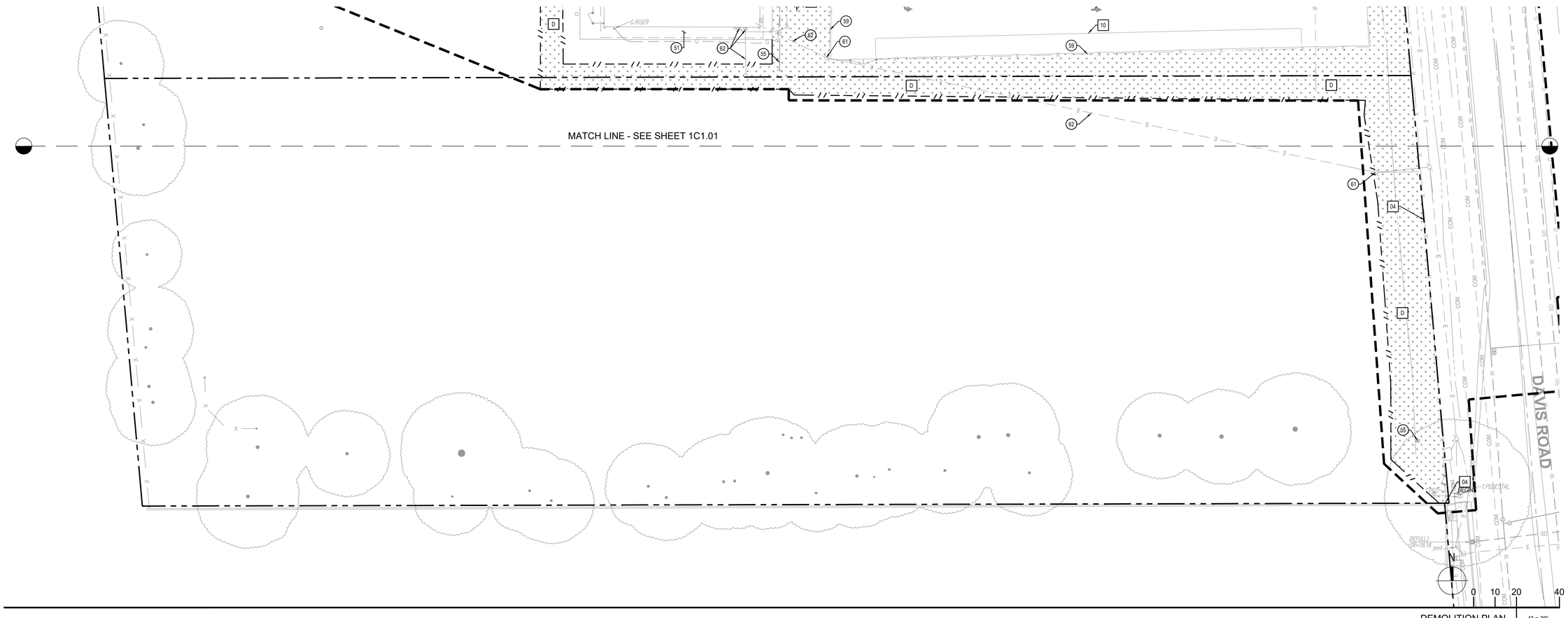

DEMOLITION PLAN 1" = 20'

PROTECTION KEYNOTES

KEY NOTE	DESCRIPTION
50	PROTECT (E) BUILDING, FOUNDATION AND OTHER STRUCTURAL FEATURES AND BUILDING UTILITIES.
51	PROTECT (E) CONCRETE PAVEMENT/SIDEWALK.
52	PROTECT (E) AC PAVEMENT.
53	PROTECT (E) STORM DRAIN FACILITIES.
54	PROTECT (E) SANITARY SEWER FACILITIES.
55	PROTECT (E) WATER SERVICE FACILITIES.
56	PROTECT (E) IRRIGATION FACILITIES.
57	PROTECT (E) MONUMENT AND/OR SIGN POST.
58	PROTECT (E) CURB.
59	PROTECT (E) FENCE AND/OR GATE.
60	PROTECT (E) GAS FACILITIES.
61	PROTECT (E) UTILITY POLE AND UTILITY LINES.
62	PROTECT (E) ELECTRICAL / TELECOM FACILITIES.
63	PROTECT (E) BALLFIELD COMPONENTS, INCLUDED BUT NOT LIMITED TO FENCING, SURFACE MATERIALS/TURF, BASES, ETC.
64	PROTECT (E) PLAQUE AND CONCRETE MOUNTING BLOCK IN PLACE.
65	PROTECT (E) SHIPPING STORAGE CONTAINERS.
66	PROTECT (E) RAMP AND HANDRAILS. WHERE SHOWN PER PLAN, PROTECT (E) BOLLARDS ADJACENT TO THE RAMP.
67	PROTECT (E) MAILBOX.

DEMOLITION KEYNOTES

KEY NOTE	DESCRIPTION
01	REMOVE (E) STORM DRAIN PIPE AND APPURTENANCES. SEE STORM DRAIN PLAN FOR IMPROVEMENTS.
02	REMOVE (E) SANITARY SEWER PIPE AND APPURTENANCES. SEE UTILITY PLAN FOR IMPROVEMENTS.
03	REMOVE (E) CURB.
04	REMOVE (E) FENCE, GATE, AND FOOTINGS, SEE LANDSCAPE PLANS FOR IMPROVEMENTS.
05	REMOVE (E) ELECTRICAL CONDUITS AND EQUIPMENT. SEE ELECTRICAL PLANS FOR IMPROVEMENTS.
06	REMOVE (E) BASKETBALL HOOP, POST AND FOUNDATION.
07	REMOVE (E) POLE AND FOUNDATION.
08	REMOVE (E) SANITARY SEWER SEPTIC TANK AND LEACH FIELDS.
09	REMOVE (E) RAMP AND HANDRAILS. WHERE SHOWN PER PLAN, REMOVE EXISTING BOLLARDS ADJACENT TO THE RAMP.
10	REMOVE (E) STRIPING BY SANDBLASTING OR OTHER APPROVED METHODS.
11	REMOVE (E) WHEELSTOP.
12	REMOVE (E) WATER PIPE AND APPURTENANCES. SEE UTILITY PLAN FOR IMPROVEMENTS.
13	REMOVE (E) BENCH AND SUPPORT POSTS.

DEMOLITION LEGEND

LABEL	DESCRIPTION
A	REMOVE (E) CONCRETE PAVEMENT/SIDEWALK AND BASE MATERIAL;, SEE DEMOLITION NOTE 10 SHEET 1C0.01.
B	REMOVE (E) AC PAVEMENT AND BASE MATERIAL, SEE DEMOLITION NOTE 10 SHEET 1C0.01.
C	REMOVE (E) BUILDING STRUCTURE AND FOUNDATIONS; SEE DEMOLITION NOTE 2 SHEET 1C0.01.
D	REMOVE (E) LANDSCAPING AND/OR TURF AREAS. SEE LANDSCAPE AND IRRIGATION PLANS FOR IMPROVEMENTS.
E	REMOVE (E) PLAYGROUND SURFACE MATERIAL (AND BASE MATERIAL IF PRESENT).
F	GRIND AREA: REMOVE UPPER 1 INCH OF (E) ASPHALT PAVEMENT. PROTECT REMAINDER OF ASPHALT PAVEMENT AND BASE MATERIAL IN PLACE.

LABEL	DESCRIPTION
	REMOVE (E) TREE, SEE DEMOLITION NOTE 5 SHEET 1C0.01.
	(E) TREE TO REMAIN AND BE PROTECTED, SEE DEMOLITION NOTE 5 SHEET 1C0.01.
	SAWCUT (E) PAVEMENT AS NEEDED. SEE DEMOLITION NOTE 6 AND 10 SHEET 1C0.01.
	APPROXIMATE LIMIT OF WORK LINE.
	REMOVE (E) UTILITY, SEE DEMOLITION NOTES 2, 4, 8, AND 9 SHEET 1C0.01.

DEMOLITION NOTES

-SEE DEMOLITION NOTES, SHEET 1C0.01.

IDENTIFICATION STAMP
DIV. OF THE STATE ARCHITECT
APP: 02-123848 INC: 01
REVIEWED FOR
SS ☑ FLS ☑ ACS ☑
DATE: 05/21/2026

LPA

ARCHITECTURE ENGINEERING INTERIOR DESIGN
LANDSCAPE ARCHITECTURE PLANNING

949-261-1001 Office

LPADesignStudios.com

5301 California Avenue, Suite 100
Irvine, California 92617

REGISTERED PROFESSIONAL ENGINEER
KATHLEEN M. SHANAHAN
R.C.E. 68369
EXP. 9-30-27
STATE OF CALIFORNIA
CIVIL

This document and all other project documents, ideas, aesthetics and designs incorporated therein are instruments of service. All project documents are copyright protected, are the property of LPA, Inc. (LPA) and cannot be lawfully used in whole or in part for any project or purpose except as set forth in the contractual agreement between LPA and its Client. The unauthorized disclosure and/or use of the project documents (including the creation of derivative works), may give rise to liability for copyright infringement, unlawful disclosure, use or misappropriation of property rights held by LPA. The unauthorized use of the project documents will give rise to the recovery of monetary losses and damages including attorney fees and costs for which the unauthorized user will be held liable.
Project documents describe the design intent of the work and are not a representation of as-built or existing conditions. LPA is not responsible for any discrepancies between the project documents and the existing conditions.

© LPA, Inc.

ELKHORN ELEMENTARY SCHOOL
CAMPUS MODERNIZATION INCREMENT 1

10505 DAVIS ROAD, STOCKTON, CA 95209

Developed for
LODI UNIFIED SCHOOL DISTRICT

Revision	Date

Submittal	Date
75% SCHEMATIC DESIGN	08/21/2025
DSA SUBMITTAL	12/18/2025

Job Number	31942
Checked By	CD
Scale	1" = 20'

DEMOLITION PLAN

1C1.02

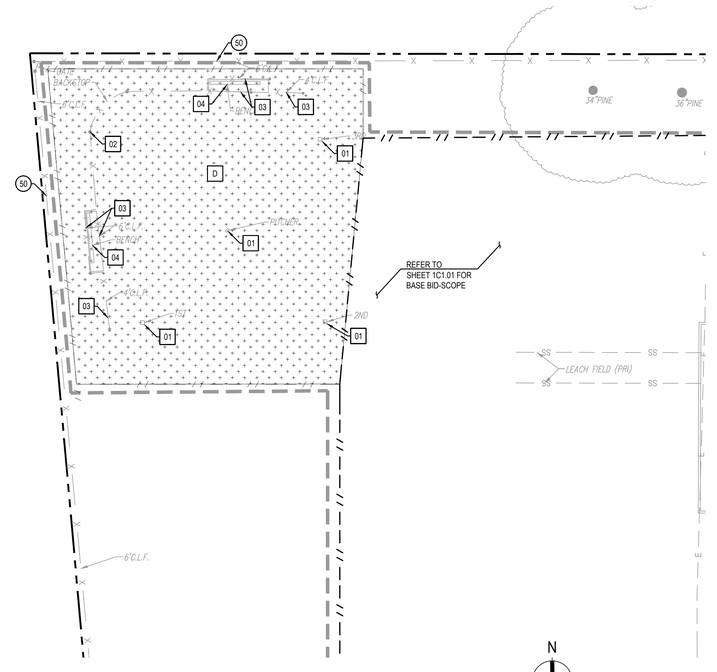

DEMOLITION PLAN ADD ALTERNATIVE 5 1" = 20'

PROTECTION KEYNOTES

KEY NOTE	DESCRIPTION
50	PROTECT (E) BUILDING, FOUNDATION AND OTHER STRUCTURAL FEATURES AND BUILDING UTILITIES.
51	PROTECT (E) CONCRETE PAVEMENT/SIDEWALK.
52	PROTECT (E) AC PAVEMENT.
53	PROTECT (E) STORM DRAIN FACILITIES.
54	PROTECT (E) SANITARY SEWER FACILITIES.
55	PROTECT (E) WATER SERVICE FACILITIES.
56	PROTECT (E) IRRIGATION FACILITIES.
57	PROTECT (E) MONUMENT AND/OR SIGN POST.
58	PROTECT (E) CURB.
59	PROTECT (E) FENCE.
60	PROTECT (E) GAS FACILITIES.
61	PROTECT (E) UTILITY POLE AND UTILITY LINES.
62	PROTECT (E) ELECTRICAL / TELECOM FACILITIES.
63	PROTECT (E) BALLFIELD COMPONENTS, INCLUDED BUT NOT LIMITED TO FENCING, SURFACE MATERIALS/TURF, BASES, ETC.
64	PROTECT (E) PLAQUE AND CONCRETE MOUNTING BLOCK IN PLACE.
65	PROTECT (E) SHIPPING STORAGE CONTAINERS.
66	PROTECT (E) RAMP AND HANDRAILS. WHERE SHOWN PER PLAN, PROTECT (E) BOLLARDS ADJACENT TO THE RAMP.

DEMOLITION KEYNOTES

KEY NOTE	DESCRIPTION
01	REMOVE (E) STORM DRAIN PIPE AND APPURTENANCES. SEE STORM DRAIN PLAN FOR IMPROVEMENTS.
02	REMOVE (E) SANITARY SEWER PIPE AND APPURTENANCES. SEE UTILITY PLAN FOR IMPROVEMENTS.
03	REMOVE (E) CURB.
04	REMOVE (E) FENCE, GATE, AND FOOTINGS, SEE LANDSCAPE PLANS FOR IMPROVEMENTS.
05	REMOVE (E) ELECTRICAL CONDUITS. SEE ELECTRICAL PLANS FOR IMPROVEMENTS.
06	REMOVE (E) BASKETBALL HOOP, POST AND FOUNDATION.
07	REMOVE (E) POLE AND FOUNDATION.
08	REMOVE (E) SANITARY SEWER SEPTIC TANK AND LEACH FIELDS.
09	REMOVE (E) RAMP AND HANDRAILS. WHERE SHOWN PER PLAN, REMOVE EXISTING BOLLARDS ADJACENT TO THE RAMP.
10	REMOVE (E) STRIPING BY SANDBLASTING OR OTHER APPROVED METHODS.
11	REMOVE (E) WHEELSTOP.
12	REMOVE (E) WATER PIPE AND APPURTENANCES. SEE UTILITY PLAN FOR IMPROVEMENTS.
13	REMOVE (E) BENCH AND SUPPORT POSTS.

DEMOLITION LEGEND

LABEL	DESCRIPTION
A	REMOVE (E) CONCRETE PAVEMENT/SIDEWALK AND BASE MATERIAL;, SEE DEMOLITION NOTE 10 SHEET 1C0.01.
B	REMOVE (E) AC PAVEMENT AND BASE MATERIAL, SEE DEMOLITION NOTE 10 SHEET 1C0.01.
C	REMOVE (E) BUILDING STRUCTURE AND FOUNDATIONS; SEE DEMOLITION NOTE 2 SHEET 1C0.01.
D	REMOVE (E) LANDSCAPING AND/OR TURF AREAS. SEE LANDSCAPE AND IRRIGATION PLANS FOR IMPROVEMENTS.
E	REMOVE (E) PLAYGROUND SURFACE MATERIAL (AND BASE MATERIAL IF PRESENT).
F	GRIND AREA: REMOVE UPPER 1 INCH OF (E) ASPHALT PAVEMENT. PROTECT REMAINDER OF ASPHALT PAVEMENT AND BASE MATERIAL IN PLACE.
	REMOVE (E) TREE, SEE DEMOLITION NOTE 5 SHEET 1C0.01.
	(E) TREE TO REMAIN AND BE PROTECTED, SEE DEMOLITION NOTE 5 SHEET 1C0.01.
	SAWCUT (E) PAVEMENT AS NEEDED. SEE DEMOLITION NOTE 6 AND 10 SHEET 1C0.01.
	APPROXIMATE LIMIT OF WORK LINE.
	REMOVE (E) UTILITY, SEE DEMOLITION NOTES 2, 4, 8, AND 9 SHEET 1C0.01.

DEMOLITION NOTES

-SEE DEMOLITION NOTES, SHEET 1C0.01.

IDENTIFICATION STAMP
DIV. OF THE STATE ARCHITECT
APP: 02-123848 INC: 01
REVIEWED FOR
SS ☑ FLS ☑ ACS ☑
DATE: 05/21/2026

LPA

ARCHITECTURE ENGINEERING INTERIOR DESIGN
LANDSCAPE ARCHITECTURE PLANNING

949-261-1001 Office

LPADesignStudios.com

5301 California Avenue, Suite 100
Irvine, California 92617

REGISTERED PROFESSIONAL ENGINEER
KATHLEEN M. SHANAY
R.C.E. 68369
EXP. 9-30-27
CIVIL
STATE OF CALIFORNIA

This document and all other project documents, ideas, aesthetics and designs incorporated therein are instruments of service. All project documents are copyright protected, are the property of LPA, Inc. (LPA) and cannot be lawfully used in whole or in part for any project or purpose except as set forth in the contractual agreement between LPA and its Client. The unauthorized disclosure and/or use of the project documents (including the creation of derivative works), may give rise to liability for copyright infringement, unlawful disclosure, use or misappropriation of property rights held by LPA. The unauthorized use of the project documents will give rise to the recovery of monetary losses and damages including attorney fees and costs for which the unauthorized user will be held liable.
Project documents describe the design intent of the work and are not a representation of as-built or existing conditions. LPA is not responsible for any discrepancies between the project documents and the existing conditions.

© LPA, Inc.

ELKHORN ELEMENTARY SCHOOL
CAMPUS MODERNIZATION INCREMENT 1

10505 DAVIS ROAD, STOCKTON, CA 95209

Developed for
LODI UNIFIED SCHOOL DISTRICT

Revision	Date

Submittal	Date
75% SCHEMATIC DESIGN	08/21/2025
DSA SUBMITTAL	12/18/2025

Job Number	31942
Checked By	CD
Scale	1" = 20'

DEMOLITION PLAN
ADD ALTERNATIVE 5

1C1.03A

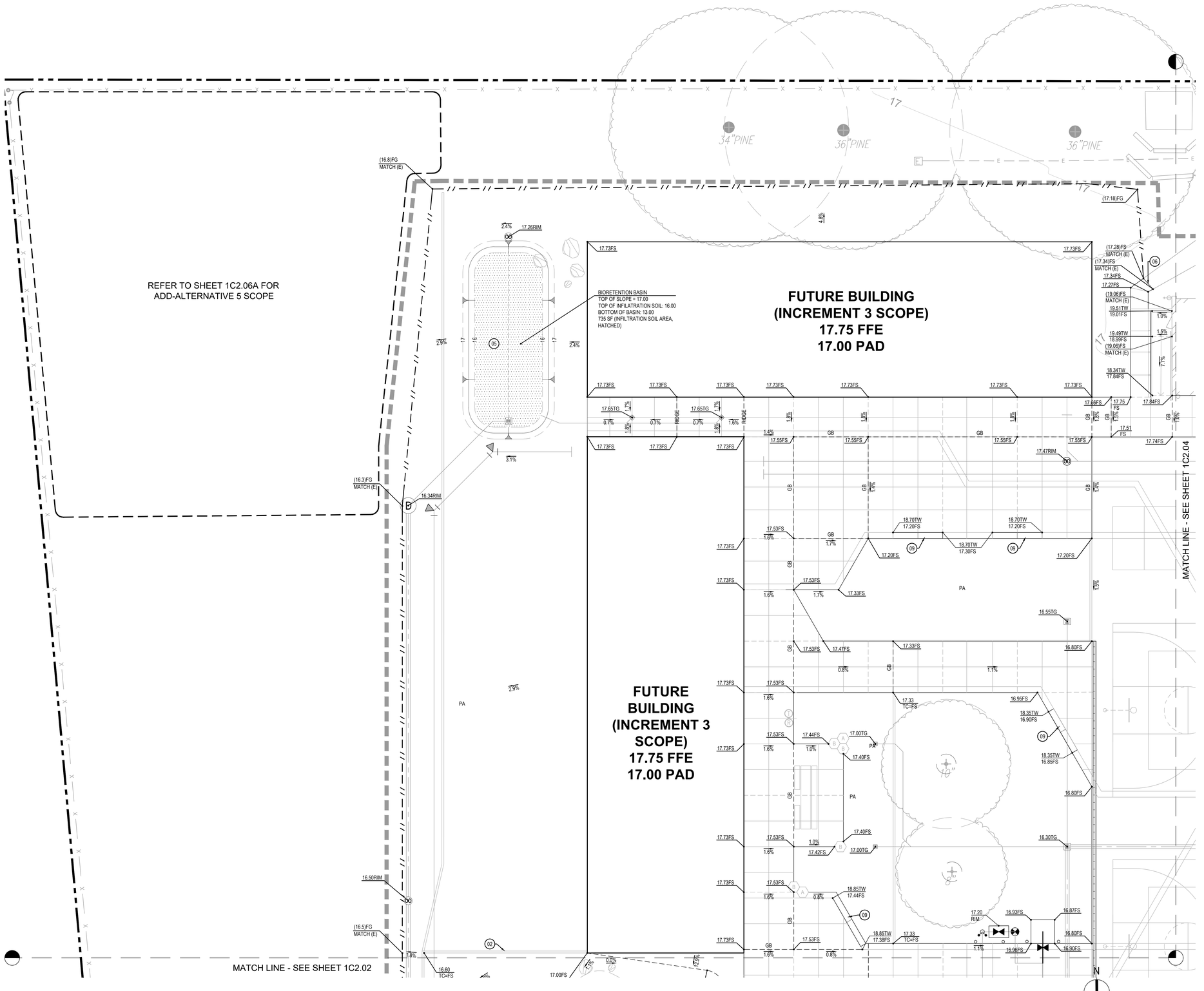

LEGEND

SYMBOL	DESCRIPTION
PA	PLANTING AREA SEE LANDSCAPE PLAN DETAILS FOR GRADES ADJACENT TO HARDSCAPE
	APPROXIMATE LIMIT OF WORK
GB	GRADE BREAK
	SAWCUT (E) PAVEMENT AS NEEDED. SEE DEMOLITION PLAN
	FLOWLINE
TOS	TOP OF SLOPE
TOE	TOE OF SLOPE
	OVERLAND RELEASE

GRADING CONSTRUCTION NOTES

KEY NOTE	DESCRIPTION
01	CONSTRUCT VERTICAL CURB PER DETAIL 02 SHEET 1C7.01.
02	CONSTRUCT FLUSH CURB PER DETAIL 03 SHEET 1C7.01.
03	CONSTRUCT ACCESSIBLE CURB RAMP PER DETAIL 05 SHEET 1C7.01.
04	CONSTRUCT BIORETENTION WITH UNDERDRAIN AREA PER DETAIL 05 SHEET 1C7.02.
05	JOIN EXISTING SIDEWALK AND MATCH EXISTING GRADE.
06	ADJUST EXISTING UTILITY RIM AND RISER TO FINISHED GRADE.
07	ADJUST EXISTING MANHOLE RIM TO FINISHED GRADE. MANHOLE CONE TO BE RAISED IF GRADE RINGS EXCEED ALLOWABLE HEIGHT FOR LADDER ACCESS.
08	NEW FENCE AND VERTICAL CURB PER LANDSCAPE DETAILS.
09	NEW CONCRETE SEATWALL PER LANDSCAPE DETAILS.
10	NEW CONCRETE PAD PER DETAIL 17 SHEET 1C7.01.

IDENTIFICATION STAMP
DIV. OF THE STATE ARCHITECT
APP: 02-123848 INC: 01
REVIEWED FOR
SS ☑ FLS ☑ ACS ☑
DATE: 05/21/2026

LPA
ARCHITECTURE ENGINEERING INTERIOR DESIGN
LANDSCAPE ARCHITECTURE PLANNING
949-261-1001 Office
LPADesignStudios.com
5301 California Avenue, Suite 100
Irvine, California 92617

REGISTERED PROFESSIONAL ENGINEER
KATHLEEN M. SHINAN
R.C.E. 68369
EXP. 9-30-27
CIVIL
STATE OF CALIFORNIA

This document and all other project documents, ideas, aesthetics and designs incorporated therein are instruments of service. All project documents are copyright protected, are the property of LPA, Inc. (LPA) and cannot be lawfully used in whole or in part for any project or purpose except as set forth in the contractual agreement between LPA and its Client. The unauthorized disclosure and/or use of the project documents (including the creation of derivative works), may give rise to liability for copyright infringement, unlawful disclosure, use or misappropriation of property rights held by LPA. The unauthorized use of the project documents will give rise to the recovery of monetary losses and damages including attorney fees and costs for which the unauthorized user will be held liable.
Project documents describe the design intent of the work and are not a representation of as-built or existing conditions. LPA is not responsible for any discrepancies between the project documents and the existing conditions.

© LPA, Inc.

ELKHORN ELEMENTARY SCHOOL
CAMPUS MODERNIZATION INCREMENT 1

10505 DAVIS ROAD, STOCKTON, CA 95209

Developed for
LODI UNIFIED SCHOOL DISTRICT

Revision	Date

Submittal	Date
75% SCHEMATIC DESIGN	08/21/2025
DSA SUBMITTAL	12/18/2025

Job Number	31942
Checked By	CD
Scale	1" = 20'

GRADING PLAN

1C2.01

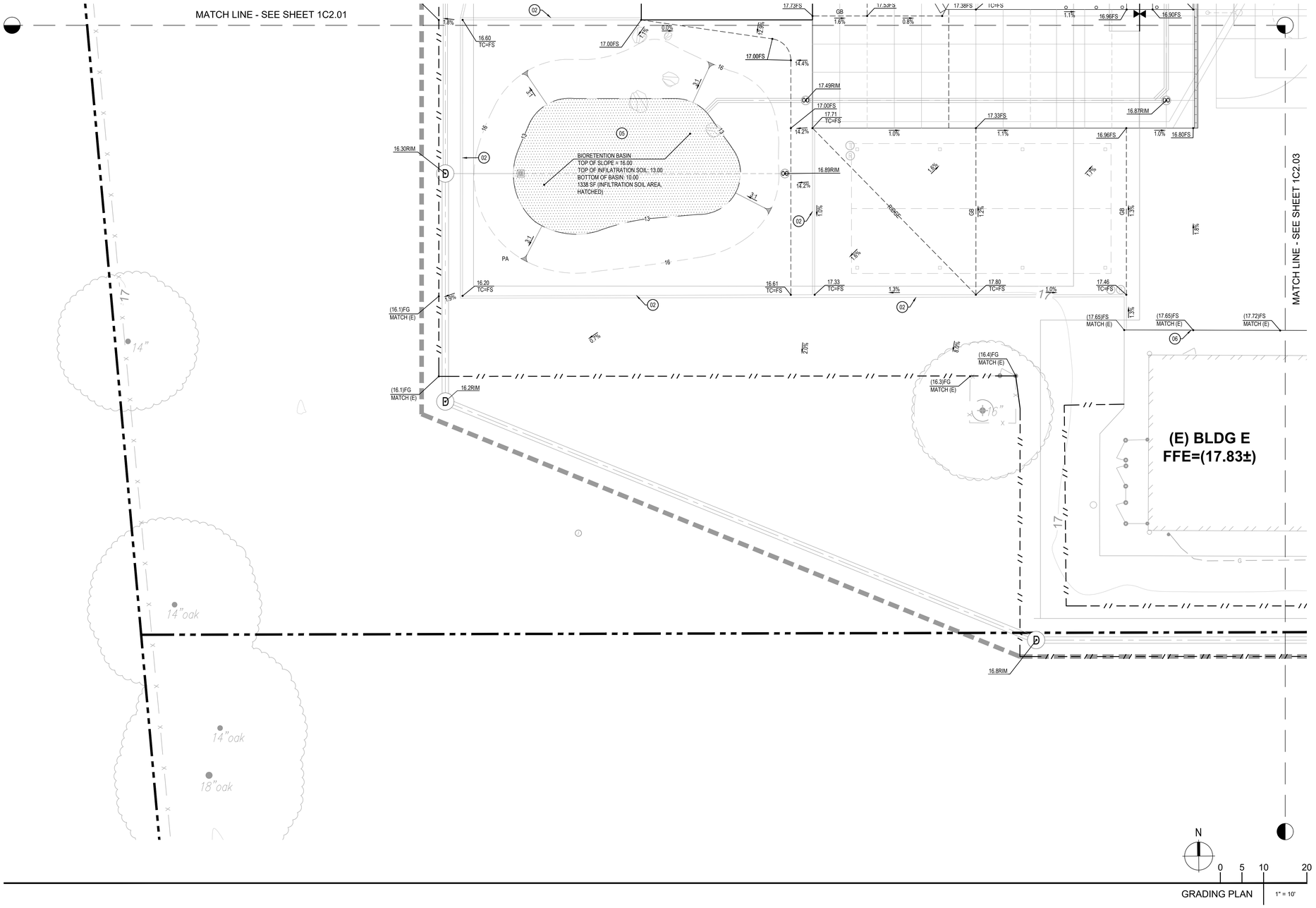

LEGEND

SYMBOL	DESCRIPTION
PA	PLANTING AREA SEE LANDSCAPE PLAN DETAILS FOR GRADES ADJACENT TO HARDSCAPE
	APPROXIMATE LIMIT OF WORK
GB	GRADE BREAK
	SAWCUT (E) PAVEMENT AS NEEDED. SEE DEMOLITION PLAN
	FLOWLINE
TOS	TOP OF SLOPE
TOE	TOE OF SLOPE
	OVERLAND RELEASE

GRADING CONSTRUCTION NOTES

KEY NOTE	DESCRIPTION
01	CONSTRUCT VERTICAL CURB PER DETAIL 02 SHEET 1C7.01.
02	CONSTRUCT FLUSH CURB PER DETAIL 03 SHEET 1C7.01.
03	CONSTRUCT ACCESSIBLE CURB RAMP PER DETAIL 05 SHEET 1C7.01.
04	CONSTRUCT BIORETENTION WITH UNDERDRAIN AREA PER DETAIL 05 SHEET 1C7.02.
05	JOIN EXISTING SIDEWALK AND MATCH EXISTING GRADE.
06	ADJUST EXISTING UTILITY RIM AND RISER TO FINISHED GRADE.
07	ADJUST EXISTING MANHOLE RIM TO FINISHED GRADE. MANHOLE CONE TO BE RAISED IF GRADE RINGS EXCEED ALLOWABLE HEIGHT FOR LADDER ACCESS.
08	NEW FENCE AND VERTICAL CURB PER LANDSCAPE DETAILS.
09	NEW CONCRETE SEATWALL PER LANDSCAPE DETAILS.
10	NEW CONCRETE PAD PER DETAIL 17 SHEET 1C7.01.

IDENTIFICATION STAMP
DIV. OF THE STATE ARCHITECT
APP: 02-123848 INC: 01
REVIEWED FOR
SS ☑ FLS ☑ ACS ☑
DATE: 05/21/2026

LPA
ARCHITECTURE ENGINEERING INTERIOR DESIGN
LANDSCAPE ARCHITECTURE PLANNING
949-261-1001 Office
LPADesignStudios.com
5301 California Avenue, Suite 100
Irvine, California 92617

REGISTERED PROFESSIONAL ENGINEER
KATHLEEN M. SHANAY
R.C.E. 68369
EXP. 9-30-27
CIVIL
STATE OF CALIFORNIA

This document and all other project documents, ideas, aesthetics and designs incorporated therein are instruments of service. All project documents are copyright protected, are the property of LPA, Inc. (LPA) and cannot be lawfully used in whole or in part for any project or purpose except as set forth in the contractual agreement between LPA and its Client. The unauthorized disclosure and/or use of the project documents (including the creation of derivative works), may give rise to liability for copyright infringement, unlawful disclosure, use or misappropriation of property rights held by LPA. The unauthorized use of the project documents will give rise to the recovery of monetary losses and damages including attorney fees and costs for which the unauthorized user will be held liable.
Project documents describe the design intent of the work and are not a representation of as-built or existing conditions. LPA is not responsible for any discrepancies between the project documents and the existing conditions.

© LPA, Inc.

ELKHORN ELEMENTARY SCHOOL
CAMPUS MODERNIZATION INCREMENT 1

10505 DAVIS ROAD, STOCKTON, CA 95209

Developed for
LODI UNIFIED SCHOOL DISTRICT

Revision	Date

Submittal	Date
75% SCHEMATIC DESIGN	08/21/2025
DSA SUBMITTAL	12/18/2025

Job Number	31942
Checked By	CD
Scale	1" = 20'

GRADING PLAN

1C2.02

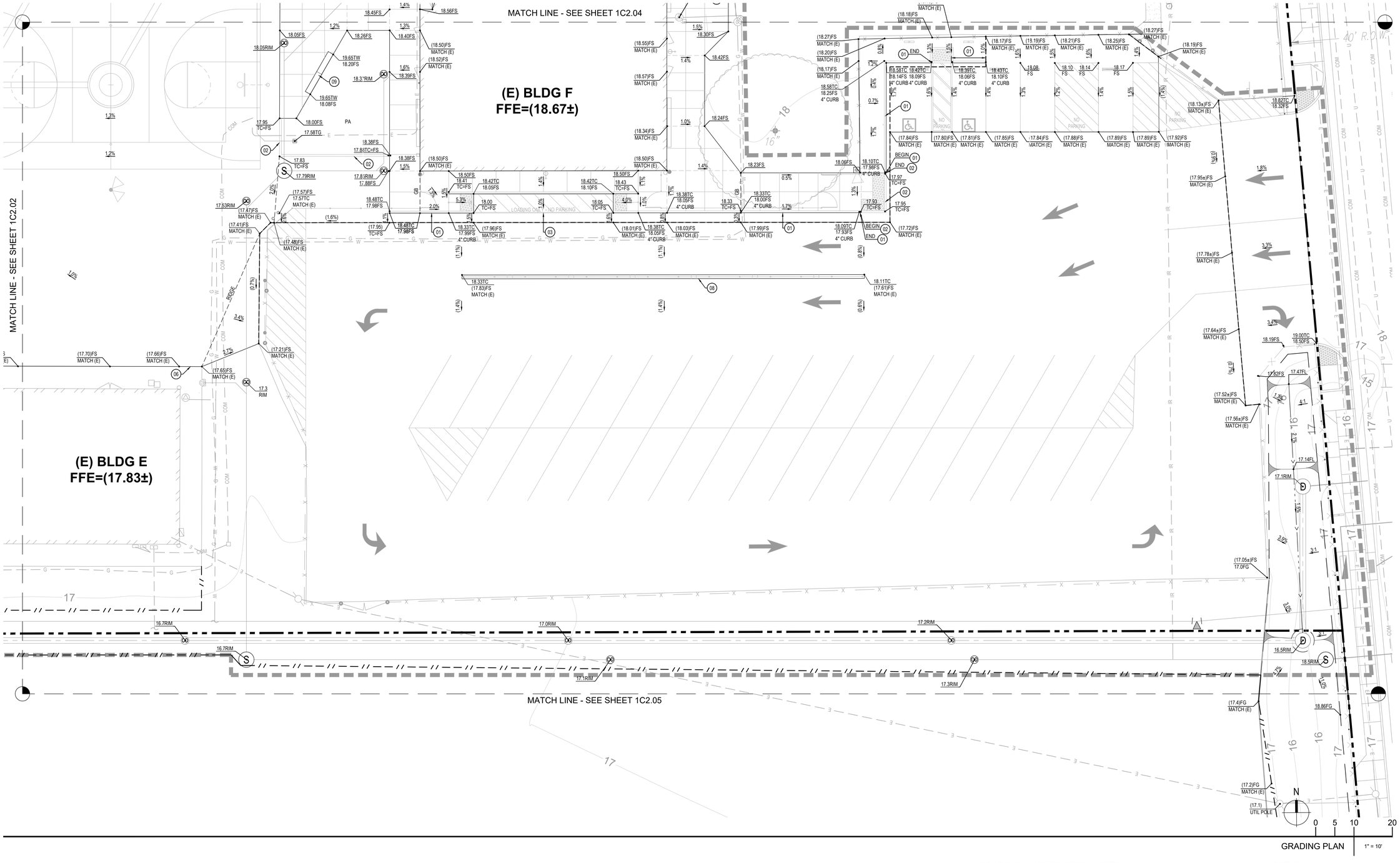

GRADING PLAN 1" = 10'

GRADING CONSTRUCTION NOTES

KEY NOTE	DESCRIPTION
01	CONSTRUCT VERTICAL CURB PER DETAIL 02 SHEET 1C7.01.
02	CONSTRUCT FLUSH CURB PER DETAIL 03 SHEET 1C7.01.
03	CONSTRUCT ACCESSIBLE CURB RAMP PER DETAIL 05 SHEET 1C7.01.
04	CONSTRUCT BIORETENTION WITH UNDERDRAIN AREA PER DETAIL 05 SHEET 1C7.02.
05	JOIN EXISTING SIDEWALK AND MATCH EXISTING GRADE.
06	ADJUST EXISTING UTILITY RIM AND RISER TO FINISHED GRADE.
07	ADJUST EXISTING MANHOLE RIM TO FINISHED GRADE. MANHOLE CONE TO BE RAISED IF GRADE RINGS EXCEED ALLOWABLE HEIGHT FOR LADDER ACCESS.
08	NEW FENCE AND VERTICAL CURB PER LANDSCAPE DETAILS.
09	NEW CONCRETE SEATWALL PER LANDSCAPE DETAILS.
10	NEW CONCRETE PAD PER DETAIL 17 SHEET 1C7.01.

LEGEND

SYMBOL	DESCRIPTION
PA	PLANTING AREA SEE LANDSCAPE PLAN DETAILS FOR GRADES ADJACENT TO HARDSCAPE
	APPROXIMATE LIMIT OF WORK
GB	GRADE BREAK
	SAWCUT (E) PAVEMENT AS NEEDED. SEE DEMOLITION PLAN
	FLOWLINE
TOS	TOP OF SLOPE
TOE	TOE OF SLOPE
	OVERLAND RELEASE

IDENTIFICATION STAMP
DIV. OF THE STATE ARCHITECT
APP: 02-123848 INC: 01
REVIEWED FOR
SS ☑ FLS ☑ ACS ☑
DATE: 05/21/2026

LPA

ARCHITECTURE ENGINEERING INTERIOR DESIGN
LANDSCAPE ARCHITECTURE PLANNING

949-261-1001 Office

LPADesignStudios.com

5301 California Avenue, Suite 100
Irvine, California 92617

REGISTERED PROFESSIONAL ENGINEER
KATHLEEN M. DRINKAT
R.C.E. 68369
EXP. 9-30-27
CIVIL
STATE OF CALIFORNIA

This document and all other project documents, ideas, aesthetics and designs incorporated therein are instruments of service. All project documents are copyright protected, are the property of LPA, Inc. (LPA) and cannot be lawfully used in whole or in part for any project or purpose except as set forth in the contractual agreement between LPA and its Client. The unauthorized disclosure and/or use of the project documents (including the creation of derivative works), may give rise to liability for copyright infringement, unlawful disclosure, use or misappropriation of property rights held by LPA. The unauthorized use of the project documents will give rise to the recovery of monetary losses and damages including attorney fees and costs for which the unauthorized user will be held liable.
Project documents describe the design intent of the work and are not a representation of as-built or existing conditions. LPA is not responsible for any discrepancies between the project documents and the existing conditions.

© LPA, Inc.

ELKHORN ELEMENTARY SCHOOL CAMPUS MODERNIZATION INCREMENT 1

10505 DAVIS ROAD, STOCKTON, CA 95209

Developed for
LODI UNIFIED SCHOOL DISTRICT

Revision	Date

Submittal	Date
75% SCHEMATIC DESIGN	08/21/2025
DSA SUBMITTAL	12/18/2025

Job Number	31942
Checked By	CD
Scale	1" = 20'

GRADING PLAN

1C2.03

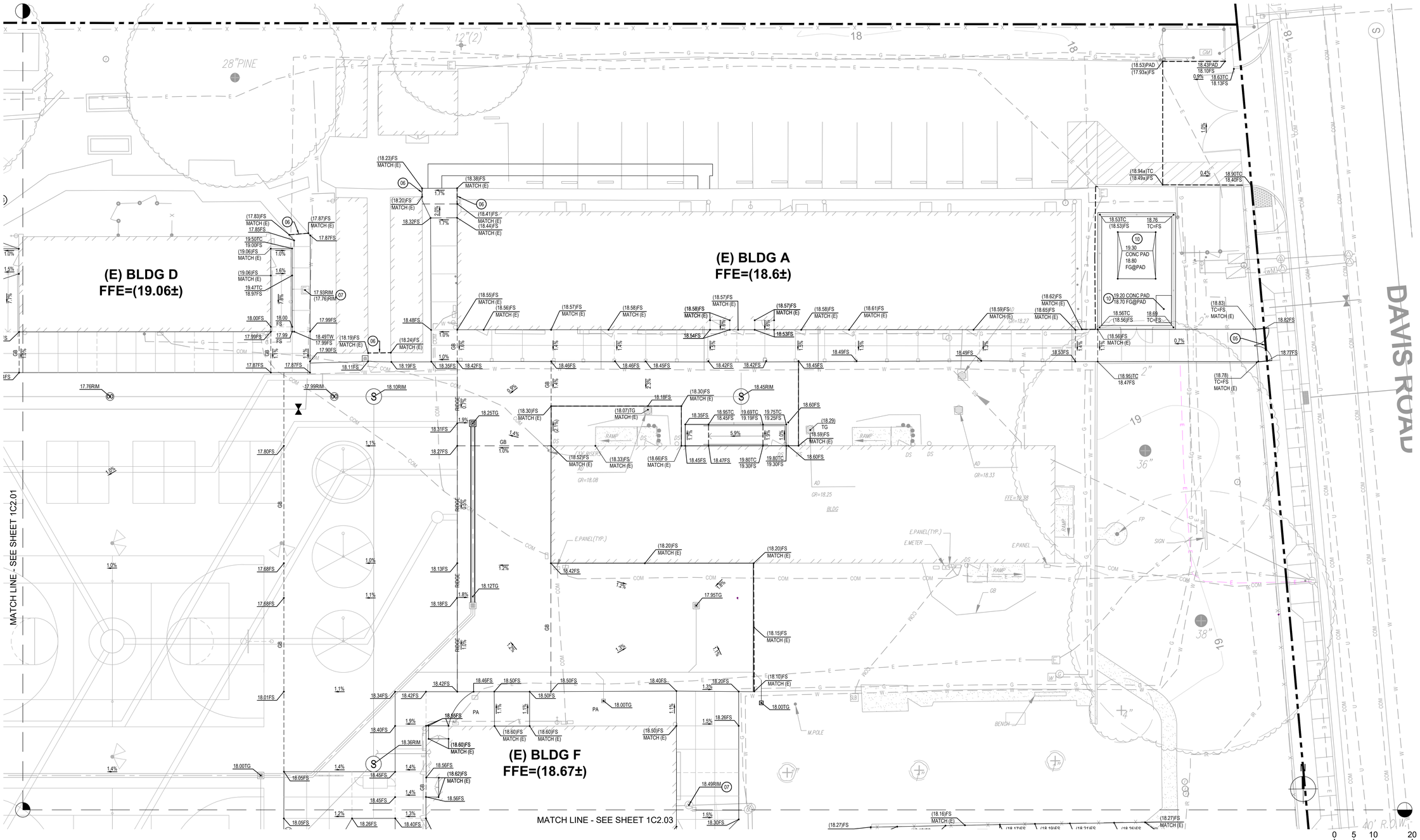

GRADING PLAN 1" = 10'

GRADING CONSTRUCTION NOTES

KEY NOTE	DESCRIPTION
01	CONSTRUCT VERTICAL CURB PER DETAIL 02 SHEET 1C7.01.
02	CONSTRUCT FLUSH CURB PER DETAIL 03 SHEET 1C7.01.
03	CONSTRUCT ACCESSIBLE CURB RAMP PER DETAIL 05 SHEET 1C7.01.
04	CONSTRUCT BIORETENTION WITH UNDERDRAIN AREA PER DETAIL 05 SHEET 1C7.02.
05	JOIN EXISTING SIDEWALK AND MATCH EXISTING GRADE.
06	ADJUST EXISTING UTILITY RIM AND RISER TO FINISHED GRADE.
07	ADJUST EXISTING MANHOLE RIM TO FINISHED GRADE. MANHOLE CONE TO BE RAISED IF GRADE RINGS EXCEED ALLOWABLE HEIGHT FOR LADDER ACCESS.
08	NEW FENCE AND VERTICAL CURB PER LANDSCAPE DETAILS.
09	NEW CONCRETE SEATWALL PER LANDSCAPE DETAILS.
10	NEW CONCRETE PAD PER DETAIL 17 SHEET 1C7.01.

LEGEND

SYMBOL	DESCRIPTION
PA	PLANTING AREA SEE LANDSCAPE PLAN DETAILS FOR GRADES ADJACENT TO HARDSCAPE
	APPROXIMATE LIMIT OF WORK
GB	GRADE BREAK
	SAWCUT (E) PAVEMENT AS NEEDED. SEE DEMOLITION PLAN
	FLOWLINE
TOS	TOP OF SLOPE
TOE	TOE OF SLOPE
	OVERLAND RELEASE

IDENTIFICATION STAMP
DIV. OF THE STATE ARCHITECT
APP: 02-123848 INC: 01
REVIEWED FOR
SS ☑ FLS ☑ ACS ☑
DATE: 05/21/2026

LPA
ARCHITECTURE ENGINEERING INTERIOR DESIGN
LANDSCAPE ARCHITECTURE PLANNING
949-261-1001 Office
LPADesignStudios.com
5301 California Avenue, Suite 100
Irvine, California 92617

REGISTERED PROFESSIONAL ENGINEER
KATHLEEN M. SPINNEY
R.C.E. 68369
EXP. 9-30-27
CIVIL
STATE OF CALIFORNIA

This document and all other project documents, ideas, aesthetics and designs incorporated therein are instruments of service. All project documents are copyright protected, are the property of LPA, Inc. (LPA) and cannot be lawfully used in whole or in part for any project or purpose except as set forth in the contractual agreement between LPA and its Client. The unauthorized disclosure and/or use of the project documents (including the creation of derivative works), may give rise to liability for copyright infringement, unlawful disclosure, use or misappropriation of property rights held by LPA. The unauthorized use of the project documents will give rise to the recovery of monetary losses and damages including attorney fees and costs for which the unauthorized user will be held liable.
Project documents describe the design intent of the work and are not a representation of as-built or existing conditions. LPA is not responsible for any discrepancies between the project documents and the existing conditions.

© LPA, Inc.

ELKHORN ELEMENTARY SCHOOL
CAMPUS MODERNIZATION INCREMENT 1

10505 DAVIS ROAD, STOCKTON, CA 95209

Developed for
LODI UNIFIED SCHOOL DISTRICT

Revision	Date

Submittal	Date
75% SCHEMATIC DESIGN	08/21/2025
DSA SUBMITTAL	12/18/2025

Job Number	31942
Checked By	CD
Scale	1" = 20'

GRADING PLAN

1C2.04

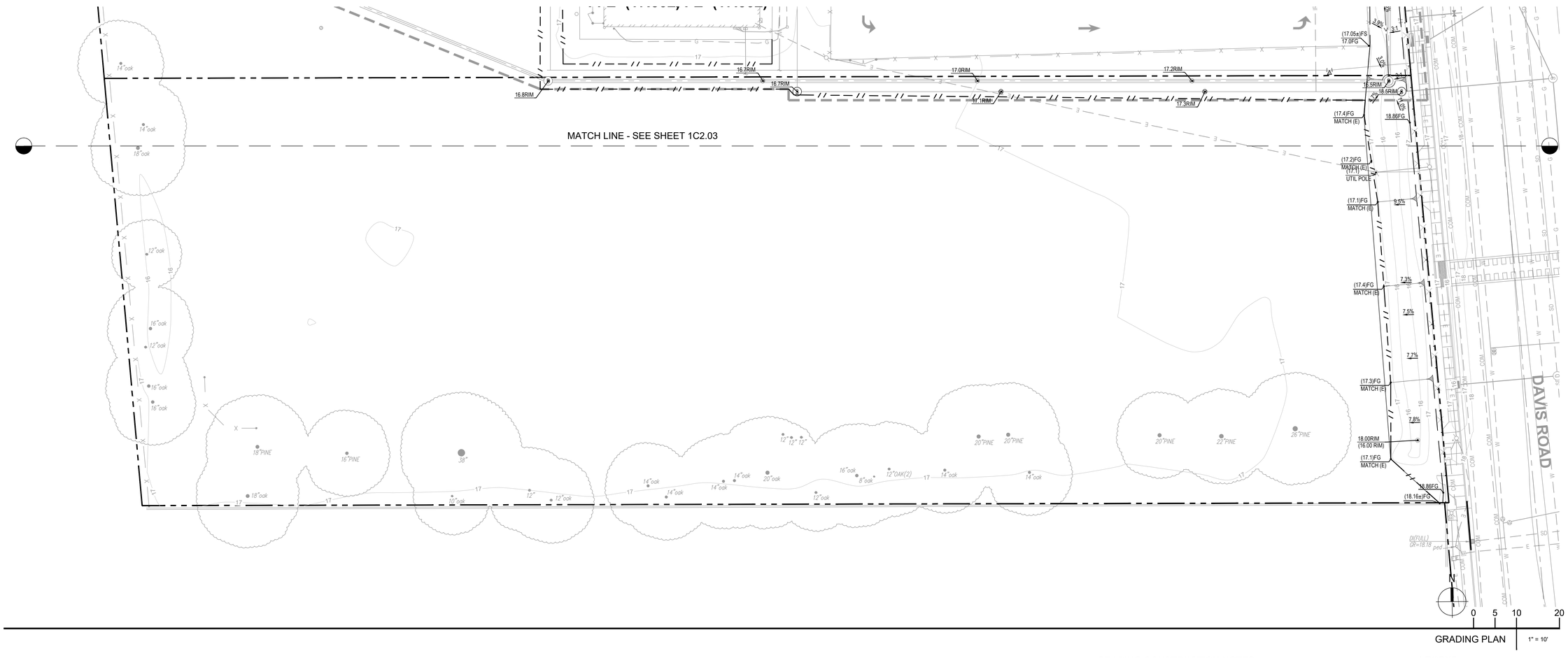

GRADING PLAN 1" = 10'

GRADING CONSTRUCTION NOTES

KEY NOTE	DESCRIPTION
01	CONSTRUCT VERTICAL CURB PER DETAIL 02 SHEET 1C7.01.
02	CONSTRUCT FLUSH CURB PER DETAIL 03 SHEET 1C7.01.
03	CONSTRUCT ACCESSIBLE CURB RAMP PER DETAIL 05 SHEET 1C7.01.
04	CONSTRUCT BIORETENTION WITH UNDERDRAIN AREA PER DETAIL 05 SHEET 1C7.02.
05	JOIN EXISTING SIDEWALK AND MATCH EXISTING GRADE.
06	ADJUST EXISTING UTILITY RIM AND RISER TO FINISHED GRADE.
07	ADJUST EXISTING MANHOLE RIM TO FINISHED GRADE. MANHOLE CONE TO BE RAISED IF GRADE RINGS EXCEED ALLOWABLE HEIGHT FOR LADDER ACCESS.
08	NEW FENCE AND VERTICAL CURB PER LANDSCAPE DETAILS.
09	NEW CONCRETE SEATWALL PER LANDSCAPE DETAILS.
10	NEW CONCRETE PAD PER DETAIL 17 SHEET 1C7.01.

LEGEND

SYMBOL	DESCRIPTION
PA	PLANTING AREA SEE LANDSCAPE PLAN DETAILS FOR GRADES ADJACENT TO HARDSCAPE
	APPROXIMATE LIMIT OF WORK
GB	GRADE BREAK
	SAWCUT (E) PAVEMENT AS NEEDED. SEE DEMOLITION PLAN
	FLOWLINE
TOS	TOP OF SLOPE
TOE	TOE OF SLOPE
	OVERLAND RELEASE

IDENTIFICATION STAMP
DIV. OF THE STATE ARCHITECT
APP: 02-123848 INC: 01
REVIEWED FOR
SS ☑ FLS ☑ ACS ☑
DATE: 05/21/2026

LPA
ARCHITECTURE ENGINEERING INTERIOR DESIGN
LANDSCAPE ARCHITECTURE PLANNING
949-261-1001 Office
LPADesignStudios.com
5301 California Avenue, Suite 100
Irvine, California 92617

REGISTERED PROFESSIONAL ENGINEER
KATHLEEN M. SHINAN
R.C.E. 68369
EXP. 9-30-27
CIVIL
STATE OF CALIFORNIA

This document and all other project documents, ideas, aesthetics and designs incorporated therein are instruments of service. All project documents are copyright protected, are the property of LPA, Inc. (LPA) and cannot be lawfully used in whole or in part for any project or purpose except as set forth in the contractual agreement between LPA and its Client. The unauthorized disclosure and/or use of the project documents (including the creation of derivative works), may give rise to liability for copyright infringement, unlawful disclosure, use or misappropriation of property rights held by LPA. The unauthorized use of the project documents will give rise to the recovery of monetary losses and damages including attorney fees and costs for which the unauthorized user will be held liable.
Project documents describe the design intent of the work and are not a representation of as-built or existing conditions. LPA is not responsible for any discrepancies between the project documents and the existing conditions.

© LPA, Inc.

ELKHORN ELEMENTARY SCHOOL
CAMPUS MODERNIZATION INCREMENT 1

10505 DAVIS ROAD, STOCKTON, CA 95209

Developed for
LODI UNIFIED SCHOOL DISTRICT

Revision	Date

Submittal	Date
75% SCHEMATIC DESIGN	08/21/2025
DSA SUBMITTAL	12/18/2025

Job Number	31942
Checked By	CD
Scale	1" = 20'

GRADING PLAN

1C2.05

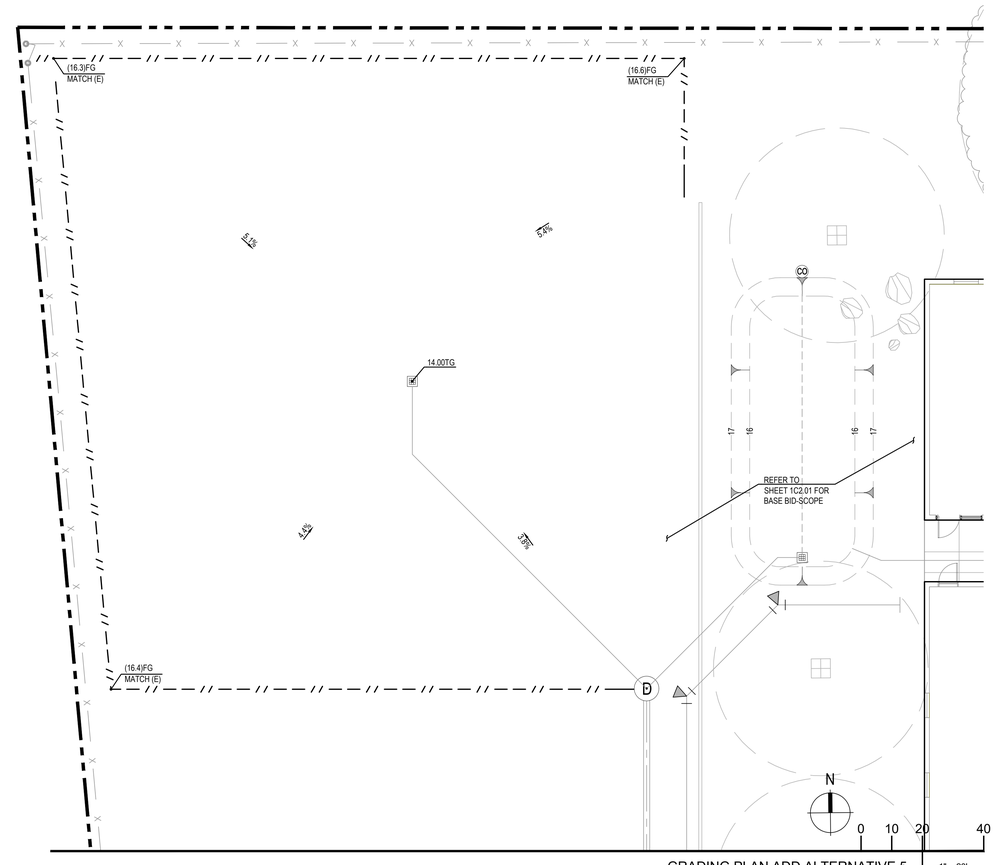

GRADING PLAN ADD ALTERNATIVE 5 1" = 20'

GRADING CONSTRUCTION NOTES

KEY NOTE	DESCRIPTION
01	CONSTRUCT VERTICAL CURB PER DETAIL 02 SHEET 1C7.01.
02	CONSTRUCT FLUSH CURB AT PLANTER PER LANDSCAPE DETAIL 10 SHEET 1L5.01.
03	CONSTRUCT FLUSH CURB PER DETAIL 03 SHEET 1C7.01.
04	CONSTRUCT ACCESSIBLE CURB RAMP PER DETAIL 05 SHEET 1C7.01.
05	CONSTRUCT BIORETENTION WITH UNDERDRAIN AREA PER DETAIL 05 SHEET 1C7.02.
06	JOIN EXISTING SIDEWALK AND MATCH EXISTING GRADE.
07	ADJUST EXISTING UTILITY RIM AND RISER TO FINISHED GRADE.
08	CONSTRUCT ACCESSIBLE RAMP PER LANDSCAPE PLAN.

LEGEND

SYMBOL	DESCRIPTION
PA	PLANTING AREA SEE LANDSCAPE PLAN DETAILS FOR GRADES ADJACENT TO HARDSCAPE
	APPROXIMATE LIMIT OF WORK
GB	GRADE BREAK
	SAWCUT (E) PAVEMENT AS NEEDED. SEE DEMOLITION PLAN
	FLOWLINE
TOS	TOP OF SLOPE
TOE	TOE OF SLOPE
	OVERLAND RELEASE

IDENTIFICATION STAMP
DIV. OF THE STATE ARCHITECT
APP: 02-123848 INC: 01
REVIEWED FOR
SS ☑ FLS ☑ ACS ☑
DATE: 05/21/2026

LPA

ARCHITECTURE ENGINEERING INTERIOR DESIGN
LANDSCAPE ARCHITECTURE PLANNING

949-261-1001 Office

LPADesignStudios.com

5301 California Avenue, Suite 100
Irvine, California 92617

REGISTERED PROFESSIONAL ENGINEER
KATHLEEN M. SWANAY
R.C.E. 68369
EXP. 9-30-27
CIVIL
STATE OF CALIFORNIA

This document and all other project documents, ideas, aesthetics and designs incorporated therein are instruments of service. All project documents are copyright protected, are the property of LPA, Inc. (LPA) and cannot be lawfully used in whole or in part for any project or purpose except as set forth in the contractual agreement between LPA and its Client. The unauthorized disclosure and/or use of the project documents (including the creation of derivative works), may give rise to liability for copyright infringement, unlawful disclosure, use or misappropriation of property rights held by LPA. The unauthorized use of the project documents will give rise to the recovery of monetary losses and damages including attorney fees and costs for which the unauthorized user will be held liable.
Project documents describe the design intent of the work and are not a representation of as-built or existing conditions. LPA is not responsible for any discrepancies between the project documents and the existing conditions.

© LPA, Inc.

ELKHORN ELEMENTARY SCHOOL
CAMPUS MODERNIZATION INCREMENT 1

10505 DAVIS ROAD, STOCKTON, CA 95209

Developed for
LODI UNIFIED SCHOOL DISTRICT

Revision	Date

Submittal	Date
75% SCHEMATIC DESIGN	08/21/2025
DSA SUBMITTAL	12/18/2025

Job Number	31942
Checked By	CD
Scale	1" = 20'

GRADING PLAN ADD
ALTERNATIVE 5

1C2.06A

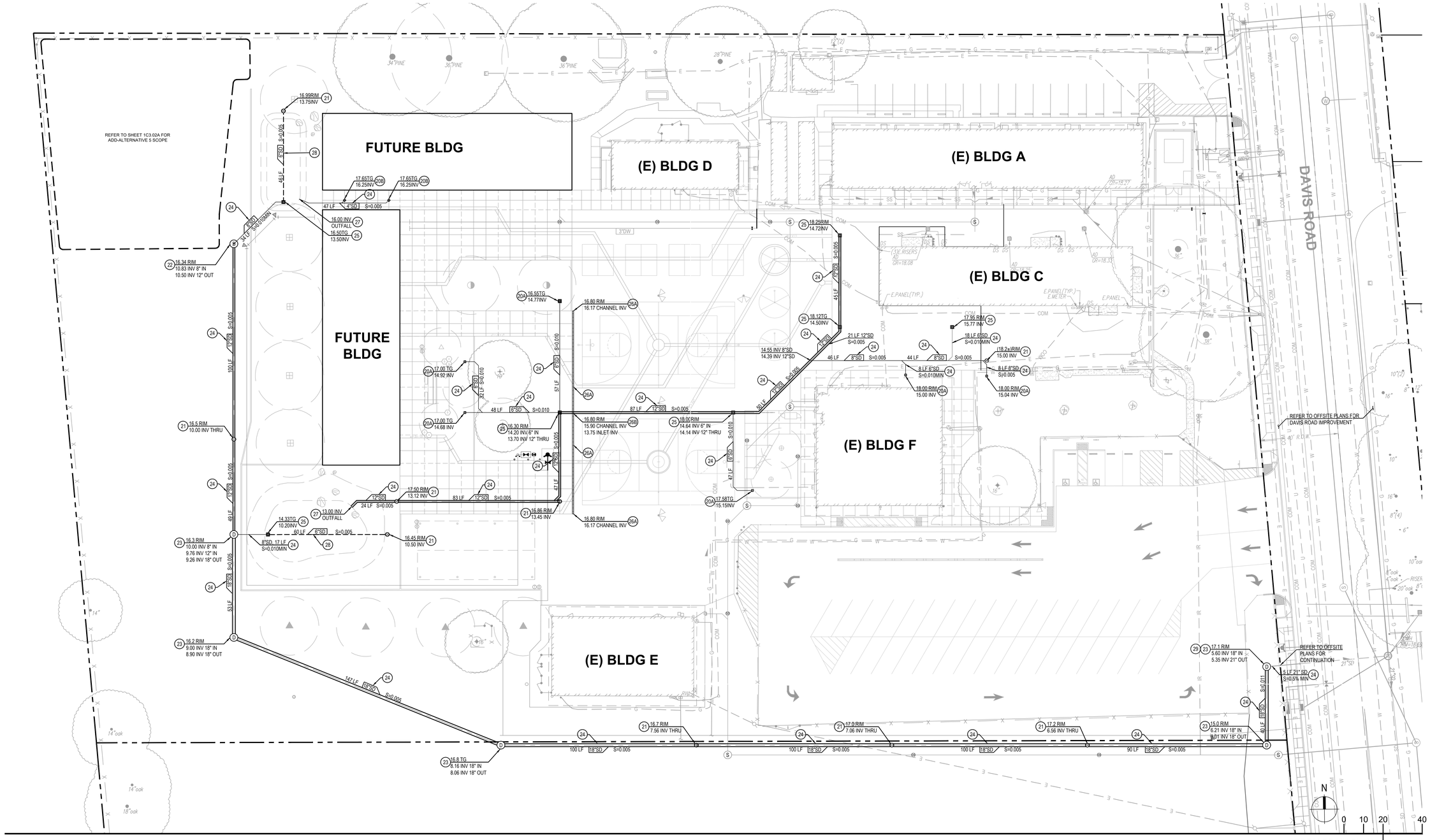

STORM DRAIN PLAN

STORM DRAIN CONSTRUCTION NOTES

KEY NOTE	DESCRIPTION
20A	SUPPLY AND INSTALL 4" RISER WITH NDS 12"X12" LOW PROFILE HOUSING ADAPTER AND A 12"X12" ATRIUM GRATE (BLACK) OR EQUIVALENT. SEE DETAIL 11 SHEET 1C7.02.
20B	SUPPLY AND INSTALL 4" RISER WITH CAST-IRON GRATE (BLACK OR EQUIVALENT). SEE DETAIL 12 SHEET 1C7.02.
21	SUPPLY AND INSTALL STORM DRAIN CLEAN OUT PER DETAIL 04 SHEET 1C7.02.
22	SUPPLY AND INSTALL 36" CONCRETE STORM DRAIN MANHOLE PER DETAIL 21 SHEET 1C7.02.
23	SUPPLY AND INSTALL 48" CONCRETE STORM DRAIN MANHOLE PER DETAIL 22 SHEET 1C7.02.
24	SUPPLY AND INSTALL PVC SDR-35 STORM DRAIN. SIZE AND SLOPE PER PLAN.
25	SUPPLY AND INSTALL 12"X12" PRECAST CONCRETE DRAIN INLET. SEE DETAIL 13 SHEET 1C7.02.
26A	SUPPLY AND INSTALL 4" TRENCH DRAIN, ACO K100 SERIES, WITH ACCESSIBLE GRATE. SEE DETAIL 08 SHEET 1C7.02.
26B	SUPPLY AND INSTALL PLASTIC AC0 CATCH BASIN, 600 SERIES, WITH ACCESSIBLE GRATE. CONNECT TO (N) 12" PVC STORM DRAIN AT LOCATION SHOWN.
27	DAYLIGHT STORM DRAIN AT BIORETENTION AREA PER DETAIL 07 SHEET 1C7.02.
28	SUPPLY AND INSTALL 6" PERFORATED SUBDRAIN AT BIORETENTION AREA PER DETAIL 05 SHEET 1C7.02.
29	POINT-OF-CONNECTION TO (E) 21-INCH STORM DRAIN LATERAL.

CONSTRUCTION NOTES:

1. UTILITIES TO CROSS OVER OR UNDER OTHER UTILITIES TO MAINTAIN 12" MINIMUM CLEARANCE AT UTILITY CROSSINGS, UNLESS NOTED OTHERWISE.
2. CONTRACTOR SHALL VERIFY SIZE AND LOCATION (HORIZONTAL AND VERTICAL) OF EXISTING CROSSING AND JOINING UTILITIES PRIOR TO CONSTRUCTION AND IMMEDIATELY NOTIFY THE ENGINEER OF ANY CONFLICT.
3. CONTRACTOR SHALL CONSTRUCT GRAVITY UTILITIES (SEWER AND STORM DRAIN) BEFORE OTHER UTILITIES. CONSTRUCTION OF THESE GRAVITY UTILITIES TO START FROM THE DOWNSTREAM ENDS.
4. EXISTING UTILITIES ARE COMPILED BASED ON PREVIOUS BASE FILES, FIELD SURVEY AND FIELD VERIFICATION. POTHOLING IS RECOMMENDED TO VERIFY ANY AND ALL UTILITIES KNOWN OR UNKNOWN WHICH MAY BE IN CONFLICT WITH PROPOSED CONSTRUCTION.
5. PRIOR TO THE REMOVAL OF ANY WET OR DRY UTILITY LINES, THE CONTRACTOR SHALL CONFIRM WITH OWNER REPRESENTATIVE WHETHER THESE UTILITY LINES ARE STILL ACTIVE OR NOT. IMMEDIATELY NOTIFY THE ENGINEER OF ANY CONFLICT.
6. CONTRACTOR TO ADJUST TO FINISHED GRADE ALL EXISTING UTILITY BOXES, STORM DRAIN CLEANOUT COVERS, PULL BOXES AND VALVE COVERS NOT SPECIFICALLY SHOWN WITHIN THE LIMITS OF WORK.
7. SEE DETAIL 01 SHEET 1C7.02 FOR STORM DRAIN UTILITY TRENCHING AND BACKFILL.
8. SAWCUT, REMOVE AND REPLACE EXISTING CURB AS REQUIRED FOR TRENCHING. MATCH EXISTING CURB.
9. ALL PRECAST DRAIN INLETS TO HAVE AN APPROVED "NO DUMPING DRAINS TO CREEK" 3" X 5¾" ROUNDED CORNERED RECTANGLES STYLE #NDO OR 4" DIAMETER ROUND STYLE #SDO ABRASION AND UV RESISTANT DURACAST STYLE MARKER BY DAS MANUFACTURING OR EQUIVALENT APPLIED TO THE CONCRETE COLLAR AROUND DRAIN INLET USING RAPID SET URETHANE ADHESIVE OR QUICKSTIK EPOXY PUTTY ADHESIVE PER MANUFACTURER'S RECOMMENDATIONS AND SPECIFICATIONS.
http://www.dasmanufacturing.com/product_guide.html

IDENTIFICATION STAMP
DIV. OF THE STATE ARCHITECT
APP: 02-123848 INC: 01
REVIEWED FOR
SS ☑ FLS ☑ ACS ☑
DATE: 05/21/2026

LPA
ARCHITECTURE ENGINEERING INTERIOR DESIGN
LANDSCAPE ARCHITECTURE PLANNING
949-261-1001 Office
LPADesignStudios.com
5301 California Avenue, Suite 100
Irvine, California 92617

REGISTERED PROFESSIONAL ENGINEER
KATHLEEN M. SHINAN
R.C.E. 68369
EXP. 9-30-27
CIVIL
STATE OF CALIFORNIA

This document and all other project documents, ideas, aesthetics and designs incorporated therein are instruments of service. All project documents are copyright protected, are the property of LPA, Inc. (LPA) and cannot be lawfully used in whole or in part for any project or purpose except as set forth in the contractual agreement between LPA and its Client. The unauthorized disclosure and/or use of the project documents (including the creation of derivative works), may give rise to liability for copyright infringement, unlawful disclosure, use or misappropriation of property rights held by LPA. The unauthorized use of the project documents will give rise to the recovery of monetary losses and damages including attorney fees and costs for which the unauthorized user will be held liable.
Project documents describe the design intent of the work and are not a representation of as-built or existing conditions. LPA is not responsible for any discrepancies between the project documents and the existing conditions.

© LPA, Inc.

ELKHORN ELEMENTARY SCHOOL
CAMPUS MODERNIZATION INCREMENT 1

10505 DAVIS ROAD, STOCKTON, CA 95209

Developed for
LODI UNIFIED SCHOOL DISTRICT

Revision	Date

Submittal	Date
75% SCHEMATIC DESIGN	08/21/2025
DSA SUBMITTAL	12/18/2025

Job Number	31942
Checked By	CD
Scale	1" = 20'

STORM DRAIN PLAN

1C3.01

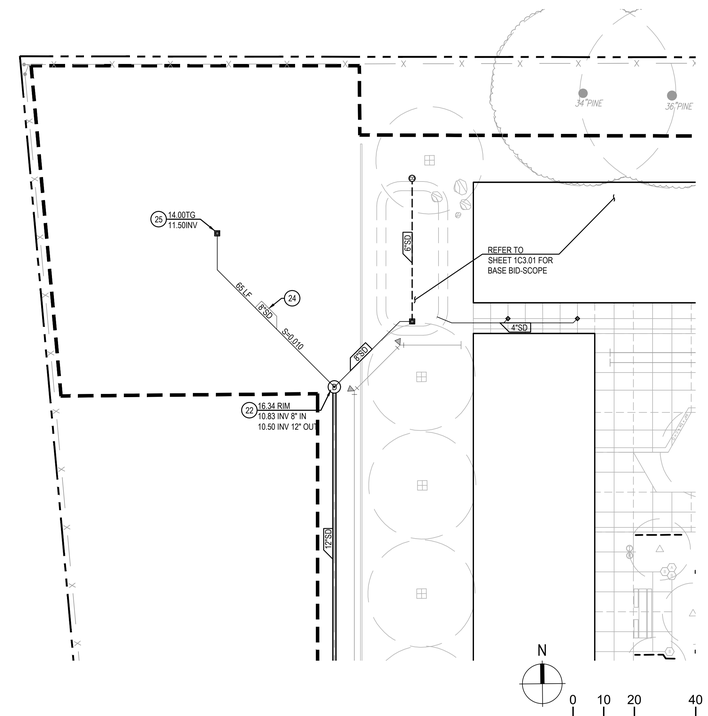

STORM DRAIN PLAN ADD ALTERNATE 5 1" = 20'

STORM DRAIN CONSTRUCTION NOTES

KEY NOTE	DESCRIPTION
20A	SUPPLY AND INSTALL 4" RISER WITH NDS 12"X12" LOW PROFILE HOUSING ADAPTER AND A 12"X12" ATRIUM GRATE (BLACK) OR EQUIVALENT. SEE DETAIL 11 SHEET 1C7.02.
20B	SUPPLY AND INSTALL 4" RISER WITH CAST-IRON GRATE (BLACK OR EQUIVALENT). SEE DETAIL 12 SHEET 1C7.02.
21	SUPPLY AND INSTALL STORM DRAIN CLEAN OUT PER DETAIL 04 SHEET 1C7.02.
22	SUPPLY AND INSTALL 36" CONCRETE STORM DRAIN MANHOLE PER DETAIL 21 SHEET 1C7.02.
23	SUPPLY AND INSTALL 48" CONCRETE STORM DRAIN MANHOLE PER DETAIL 22 SHEET 1C7.02.
24	SUPPLY AND INSTALL PVC SDR-35 STORM DRAIN. SIZE AND SLOPE PER PLAN.
25	SUPPLY AND INSTALL 12"X12" PRECAST CONCRETE DRAIN INLET. SEE DETAIL 13 SHEET 1C7.02.
26A	SUPPLY AND INSTALL 4" TRENCH DRAIN, ACO K100 SERIES, WITH ACCESSIBLE GRATE. SEE DETAIL 08 SHEET 1C7.02.
26B	SUPPLY AND INSTALL PLASTIC AC0 CATCH BASIN, 600 SERIES, WITH ACCESSIBLE GRATE. CONNECT TO (N) 12" PVC STORM DRAIN AT LOCATION SHOWN.
27	DAYLIGHT STORM DRAIN AT BIORETENTION AREA PER DETAIL 07 SHEET 1C7.02.
28	SUPPLY AND INSTALL 6" PERFORATED SUBDRAIN AT BIORETENTION AREA PER DETAIL 05 SHEET 1C7.02.
29	POINT-OF-CONNECTION TO (E) 21-INCH STORM DRAIN LATERAL.

CONSTRUCTION NOTES:

1. UTILITIES TO CROSS OVER OR UNDER OTHER UTILITIES TO MAINTAIN 12" MINIMUM CLEARANCE AT UTILITY CROSSINGS, UNLESS NOTED OTHERWISE.
2. CONTRACTOR SHALL VERIFY SIZE AND LOCATION (HORIZONTAL AND VERTICAL) OF EXISTING CROSSING AND JOINING UTILITIES PRIOR TO CONSTRUCTION AND IMMEDIATELY NOTIFY THE ENGINEER OF ANY CONFLICT.
3. CONTRACTOR SHALL CONSTRUCT GRAVITY UTILITIES (SEWER AND STORM DRAIN) BEFORE OTHER UTILITIES. CONSTRUCTION OF THESE GRAVITY UTILITIES TO START FROM THE DOWNSTREAM ENDS.
4. EXISTING UTILITIES ARE COMPILED BASED ON PREVIOUS BASE FILES, FIELD SURVEY AND FIELD VERIFICATION. POTHOLING IS RECOMMENDED TO VERIFY ANY AND ALL UTILITIES KNOWN OR UNKNOWN WHICH MAY BE IN CONFLICT WITH PROPOSED CONSTRUCTION.
5. PRIOR TO THE REMOVAL OF ANY WET OR DRY UTILITY LINES, THE CONTRACTOR SHALL CONFIRM WITH OWNER REPRESENTATIVE WHETHER THESE UTILITY LINES ARE STILL ACTIVE OR NOT. IMMEDIATELY NOTIFY THE ENGINEER OF ANY CONFLICT.
6. CONTRACTOR TO ADJUST TO FINISHED GRADE ALL EXISTING UTILITY BOXES, STORM DRAIN CLEANOUT COVERS, PULL BOXES AND VALVE COVERS NOT SPECIFICALLY SHOWN WITHIN THE LIMITS OF WORK.
7. SEE DETAIL 01 SHEET 1C7.02 FOR STORM DRAIN UTILITY TRENCHING AND BACKFILL.
8. SAWCUT, REMOVE AND REPLACE EXISTING CURB AS REQUIRED FOR TRENCHING. MATCH EXISTING CURB.
9. ALL PRECAST DRAIN INLETS TO HAVE AN APPROVED "NO DUMPING DRAINS TO CREEK" 3" X 5¾" ROUNDED CORNERED RECTANGLES STYLE #NDO OR 4" DIAMETER ROUND STYLE #SDO ABRASION AND UV RESISTANT DURACAST STYLE MARKER BY DAS MANUFACTURING OR EQUIVALENT APPLIED TO THE CONCRETE COLLAR AROUND DRAIN INLET USING RAPID SET URETHANE ADHESIVE OR QUICKSTIK EPOXY PUTTY ADHESIVE PER MANUFACTURER'S RECOMMENDATIONS AND SPECIFICATIONS.
http://www.dasmanufacturing.com/product_guide.html

IDENTIFICATION STAMP
DIV. OF THE STATE ARCHITECT
APP: 02-123848 INC: 01
REVIEWED FOR
SS ☑ FLS ☑ ACS ☑
DATE: 05/21/2026

LPA
ARCHITECTURE ENGINEERING INTERIOR DESIGN
LANDSCAPE ARCHITECTURE PLANNING
949-261-1001 Office
LPADesignStudios.com
5301 California Avenue, Suite 100
Irvine, California 92617

REGISTERED PROFESSIONAL ENGINEER
KATHLEEN M. SHANAY
R.C.E. 68369
EXP. 9-30-27
STATE OF CALIFORNIA
CIVIL

This document and all other project documents, ideas, aesthetics and designs incorporated therein are instruments of service. All project documents are copyright protected, are the property of LPA, Inc. (LPA) and cannot be lawfully used in whole or in part for any project or purpose except as set forth in the contractual agreement between LPA and its Client. The unauthorized disclosure and/or use of the project documents (including the creation of derivative works), may give rise to liability for copyright infringement, unlawful disclosure, use or misappropriation of property rights held by LPA. The unauthorized use of the project documents will give rise to the recovery of monetary losses and damages including attorney fees and costs for which the unauthorized user will be held liable.
Project documents describe the design intent of the work and are not a representation of as-built or existing conditions. LPA is not responsible for any discrepancies between the project documents and the existing conditions.

© LPA, Inc.

ELKHORN ELEMENTARY SCHOOL
CAMPUS MODERNIZATION INCREMENT 1

10505 DAVIS ROAD, STOCKTON, CA 95209

Developed for
LODI UNIFIED SCHOOL DISTRICT

Revision	Date

Submittal	Date
75% SCHEMATIC DESIGN	08/21/2025
DSA SUBMITTAL	12/18/2025

Job Number	31942
Checked By	CD
Scale	1" = 20'

STORM DRAIN PLAN
ADD ALTERNATE 5

1C3.02A

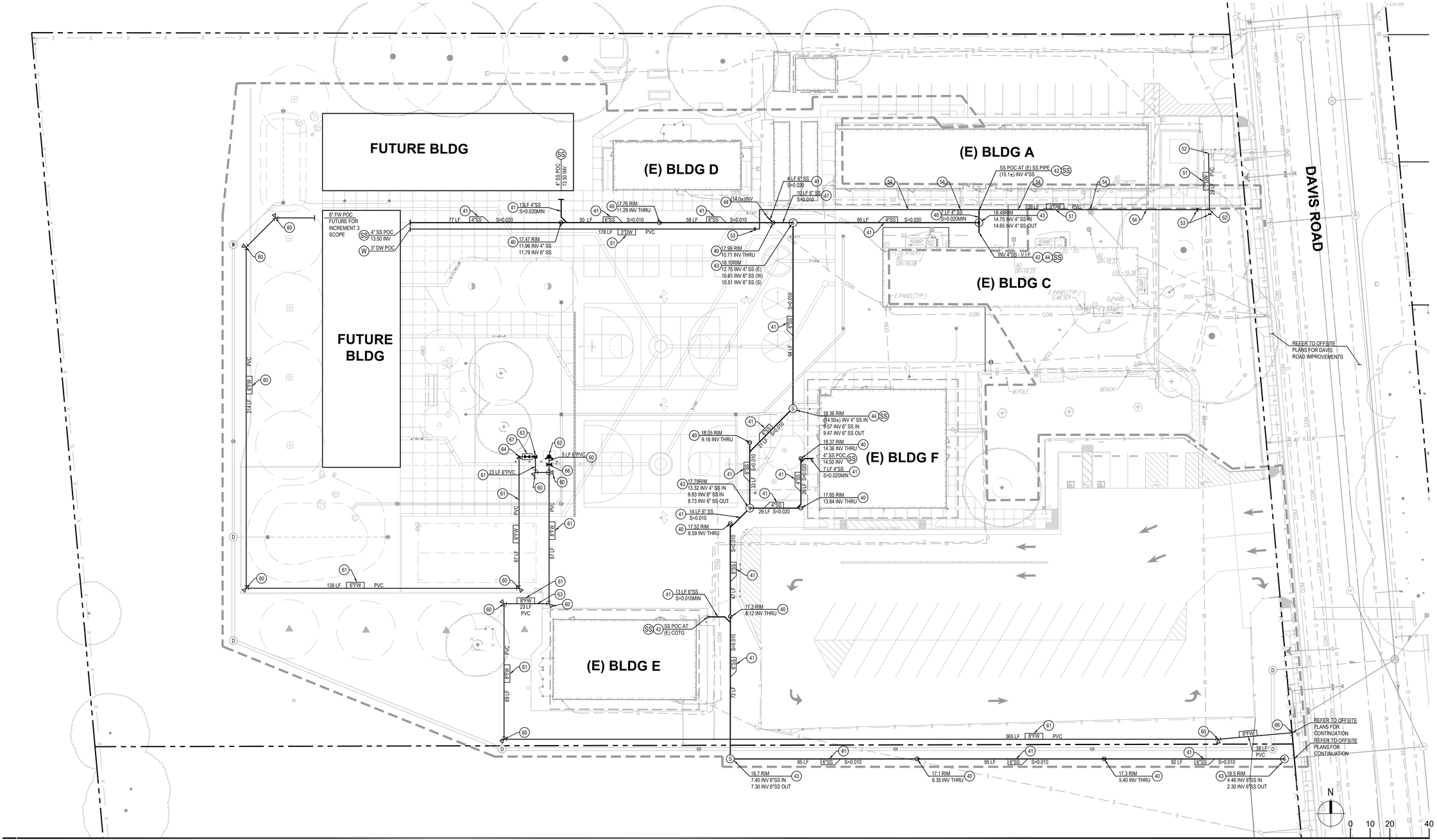

UTILITY PLAN 1" = 20'

FIRE WATER CONSTRUCTION NOTES:

KEY NOTE	DESCRIPTION
F.	FIRE WATER SERVICE POINT OF CONNECTION. SUPPLY AND INSTALL WATER SERVICE LATERAL STUBBED 5 FT. FROM FACE OF BUILDING. SIZE AS SHOWN. PLUG AND MARK END. COORDINATE EXACT LOCATION WITH PLUMBING PLANS.
60	INSTALL THRUST BLOCKING PER DETAIL 15 SHEET 1C7.02. TYPICAL FOR ALL BENDS, TEES AND CROSSES.
61	PLACE PVC C900 DR-18 WITH 30" MIN COVER AND 36" MIN COVER WHERE SURFACE LOADS ARE EXPECTED.
62	INSTALL FIRE HYDRANT PER DETAIL 14 SHEET 1C7.02.
63	INSTALL FDC PER DETAIL 16 SHEET 1C7.02.
64	INSTALL PIV PER DETAIL 20 SHEET 1C7.02.
65	COORDINATE LOCATION OF ELECTRICAL SERVICE FOR THE ELECTRICAL SUPERVISORY SWITCH TO THE FIRE ALARM CONTROL PANEL WITH ELECTRICAL PLANS.
66	INSTALL GATE VALVE WITH VALVE BOX PER DETAIL 24 SHEET 1C7.02.
67	INSTALL SWING CHECK VALVE WITH VALVE BOX PER DETAIL 21 SHEET 1C7.01.

SEWER CONSTRUCTION NOTES:

KEY NOTE	DESCRIPTION
SS	SEWER SERVICE POINT OF CONNECTION. FOR FUTURE BLDGS AND (N) CONNECTIONS, SUPPLY AND INSTALL SEWER SERVICE LATERAL STUBBED 5 FT. FROM FACE OF BLDG, S=0.020 MIN. PLUG AND MARK END. COORDINATE EXACT LOCATION WITH PLUMBING PLANS.
40	INSTALL SEWER CLEANOUT PER DETAIL 04 SHEET 1C7.02.
41	PLACE PVC SDR 35 (ASTM D 3034). SIZE AND SLOPE AS SHOWN.
42	ASSUMED LOCATION AND INVERT OF EXISTING SEWER LINE. VERIFY PRIOR TO CONSTRUCTION AND NOTIFY ENGINEER OF ANY DISCREPANCIES.
43	CONSTRUCT STANDARD 36" SEWER MANHOLE WITH CHANNELIZED BOTTOM PER DETAIL 21 SHEET 1C7.02.
44	CONNECT TO EXISTING SEWER SERVICE LINE. CONTRACTOR TO VERIFY SIZE AND LOCATION OF EXISTING WATER LINE AND NOTIFY ENGINEER OF ANY DISCREPANCIES PRIOR TO CONSTRUCTION.

WATER CONSTRUCTION NOTES:

KEY NOTE	DESCRIPTION
W	DOMESTIC WATER SERVICE POINT OF CONNECTION. FOR FUTURE BLDGS, SUPPLY AND INSTALL WATER SERVICE LATERAL STUBBED 5 FT. FROM FACE OF BLDG. SIZE AS SHOWN. PLUG AND MARK END. COORDINATE EXACT LOCATION WITH PLUMBING PLANS.
51	PLACE PVC SCHEDULE 80 WITH 30" MIN COVER AND 36" MIN COVER WHERE SURFACE LOADS ARE EXPECTED.
52	CONNECT TO EXISTING DOMESTIC WATER SERVICE LINE WITH FLANGED COUPLING ADAPTER USING STAINLESS STEEL NUTS, BOLTS, AND WASHERS. CONTRACTOR TO VERIFY SIZE AND LOCATION OF EXISTING WATER LINE AND NOTIFY ENGINEER OF ANY DISCREPANCIES PRIOR TO CONSTRUCTION.
53	INSTALL GATE VALVE WITH VALVE BOX PER DETAIL 24 SHEET 1C7.02.
54	RECONNECT (E) BUILDING A WATER SUPPLY PIPE TO (N) 3" DIA. WATER LINE. FIELD VERIFY CONNECTION AND PROVIDE ALL APPURTENANCES (TEES, ETC.) FOR COMPLETE RECONNECTION.

CONSTRUCTION NOTES:

1. UTILITIES TO CROSS OVER OR UNDER OTHER UTILITIES TO MAINTAIN 12" MINIMUM CLEARANCE AT UTILITY CROSSINGS, UNLESS NOTED OTHERWISE. SANITARY SEWER TO CROSS UNDER POTABLE WATER.
2. CONTRACTOR SHALL VERIFY SIZE AND LOCATION (HORIZONTAL AND VERTICAL) OF EXISTING CROSSING AND JOINING UTILITIES PRIOR TO CONSTRUCTION AND IMMEDIATELY NOTIFY THE ENGINEER OF ANY CONFLICT.
3. CONTRACTOR SHALL CONSTRUCT GRAVITY UTILITIES (SEWER AND STORM DRAIN) BEFORE OTHER UTILITIES. CONSTRUCTION OF THESE GRAVITY UTILITIES TO START FROM THE DOWNSTREAM ENDS.
4. EXISTING UTILITIES ARE COMPILED BASED ON PREVIOUS BASE FILES, FIELD SURVEY AND FIELD VERIFICATION. POTHOLING IS RECOMMENDED TO VERIFY ANY AND ALL UTILITIES KNOWN OR UNKNOWN WHICH MAY BE IN CONFLICT WITH PROPOSED CONSTRUCTION.
5. PRIOR TO THE REMOVAL OF ANY WET OR DRY UTILITY LINES, THE CONTRACTOR SHALL CONFIRM WITH OWNER REPRESENTATIVE WHETHER THESE UTILITY LINES ARE STILL ACTIVE OR NOT. IMMEDIATELY NOTIFY THE ENGINEER OF ANY CONFLICT.
6. CONTRACTOR TO ADJUST TO FINISH GRADE ALL EXISTING UTILITY BOXES, SEWER CLEANOUT COVERS, PULL BOXES AND VALVE COVERS NOT SPECIFICALLY SHOWN WITHIN THE LIMITS OF WORK.
7. SEE DETAIL 02 SHEET 1C7.02 FOR SEWER UTILITY TRENCHING AND BACKFILL.
8. SEE DETAIL 03 SHEET 1C7.02 FOR WATER UTILITY TRENCHING AND BACKFILL.

IDENTIFICATION STAMP
DIV. OF THE STATE ARCHITECT
APP: 02-123848 INC: 01
REVIEWED FOR
SS ☑ FLS ☑ ACS ☑
DATE: 05/21/2026

LPA

ARCHITECTURE ENGINEERING INTERIOR DESIGN
LANDSCAPE ARCHITECTURE PLANNING

949-261-1001 Office

LPADesignStudios.com

5301 California Avenue, Suite 100
Irvine, California 92617

REGISTERED PROFESSIONAL ENGINEER
KATHLEEN M. SHANAY
R.C.E. 68369
EXP. 9-30-27
STATE OF CALIFORNIA CIVIL

This document and all other project documents, ideas, aesthetics and designs incorporated therein are instruments of service. All project documents are copyright protected, are the property of LPA, Inc. (LPA) and cannot be lawfully used in whole or in part for any project or purpose except as set forth in the contractual agreement between LPA and its Client. The unauthorized disclosure and/or use of the project documents (including the creation of derivative works), may give rise to liability for copyright infringement, unlawful disclosure, use or misappropriation of property rights held by LPA. The unauthorized use of the project documents will give rise to the recovery of monetary losses and damages including attorney fees and costs for which the unauthorized user will be held liable.
Project documents describe the design intent of the work and are not a representation of as-built or existing conditions. LPA is not responsible for any discrepancies between the project documents and the existing conditions.

© LPA, Inc.

ELKHORN ELEMENTARY SCHOOL
CAMPUS MODERNIZATION INCREMENT 1

10505 DAVIS ROAD, STOCKTON, CA 95209

Developed for
LODI UNIFIED SCHOOL DISTRICT

Revision	Date

Submittal	Date
75% SCHEMATIC DESIGN	08/21/2025
DSA SUBMITTAL	12/18/2025

Job Number	31942
Checked By	CD
Scale	1" = 20'

UTILITY PLAN

1C4.01

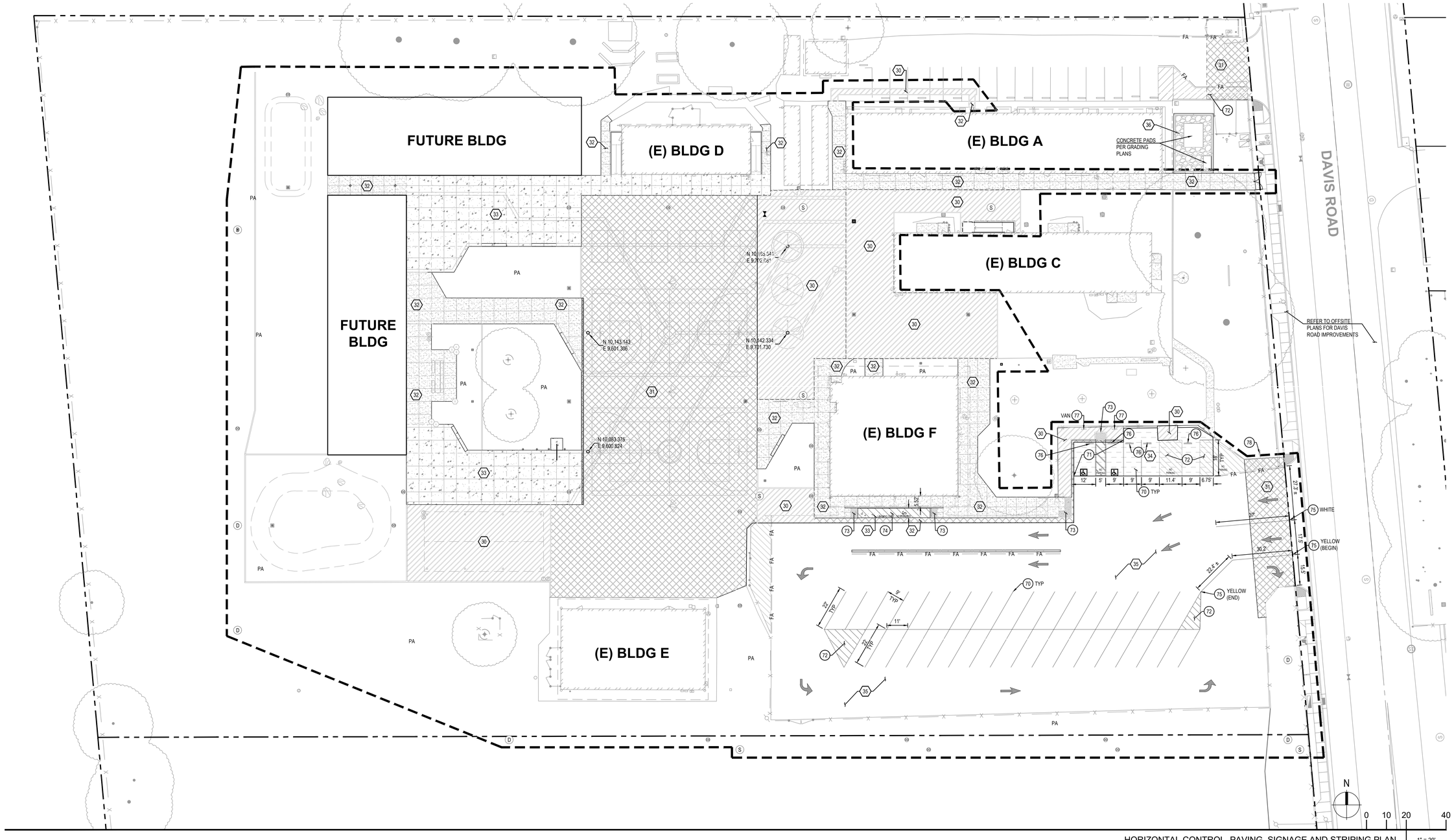

HORIZONTAL CONTROL, PAVING, SIGNAGE AND STRIPING PLAN 1" = 20'

HORIZONTAL CONTROL NOTES:

THIS HORIZONTAL CONTROL PLAN ESTABLISHES THE FOLLOWING TO BE USED AS BASE CONTROL FOR CONSTRUCTION STAKING.

1. PRIOR TO STAKING ANY BUILDING STRUCTURE, SURVEYOR SHALL VERIFY THAT THE GRIDS SHOWN ON THIS PLAN MATCHES THE ARCHITECTURAL & STRUCTURAL PLANS.
2. TWO COORDINATES ARE PROVIDED TO ESTABLISH THE BUILDING GRID. SEE ARCHITECTURAL AND STRUCTURAL PLANS FOR FINAL BUILDING DIMENSIONS.
3. IF ANY DISCREPANCIES ARE FOUND DURING CONSTRUCTION STAKING NOTIFY CIVIL ENGINEER IMMEDIATELY.
4. SEE LANDSCAPE PLANS FOR DETAILED HARDSCAPE DIMENSIONS.
5. SEE LANDSCAPE PLANS FOR LOCATION AND TYPE OF CONCRETE WALKS AND HARDSCAPE INCLUDING DETAILS FOR CONCRETE FINISHES, CONTROL JOINTS AND EXPANSION JOINTS.
6. SEE PAVING AND STRIPING PLANS FOR LOCATION AND TYPE OF PAVING AND STRIPING.

BENCHMARK

-SEE SHEET 1C0.01 FOR BENCHMARK.

BASIS OF BEARINGS

-SEE SHEET 1C0.01 FOR BASIS OF BEARINGS.

PAVING NOTES:

1. SEE LANDSCAPE PLANS FOR PAVERS, LOCATION AND TYPE OF CONCRETE WALKS AND HARDSCAPE INCLUDING DETAILS FOR CONCRETE FINISHES, CONTROL JOINTS AND EXPANSION JOINTS.
2. VERIFY ALL VEHICULAR AND NON-VEHICULAR LIMITS WITH LANDSCAPE PLANS.
3. CONCRETE (OR ASPHALT IF OCCURS) PAVEMENT SHALL SLOPE AWAY FROM BUILDINGS PER GRADING PLANS OR AT A 1% MINIMUM SLOPE.

STRIPING NOTES

1. ALL EXISTING STRIPING AND MARKINGS TO REMAIN UNLESS OTHERWISE NOTED. CONFLICTS BETWEEN EXISTING AND PROPOSED SHALL BE RESOLVED BY THE ENGINEER.
2. REMOVAL OF EXISTING STRIPING AND PAVEMENT MARKINGS SHALL BE ACCOMPLISHED BY WET SANDBLASTING OR OTHER APPROVED GRINDING METHOD PRIOR TO INSTALLATION OF NEW STRIPING. ALL CONFLICTING STRIPING, PAVEMENT MARKINGS, AND RAISED PAVEMENT MARKERS SHALL BE REMOVED.
3. PAVEMENT THAT IS DAMAGED DUE TO THE REMOVAL OF MARKERS OR STRIPING SHALL BE REPAIRED TO THE SATISFACTION OF THE OWNER.

STRIPING & SIGNAGE LEGEND

SYMBOL	DESCRIPTION
	APPLY PAVEMENT MARKING TYPE I (10FT) ARROW PER CA MUTCD FIGURE 3B-21 (CA). MARKING SHALL BE WHITE THERMOPLASTIC PAINT. PLACE PAVEMENT MARKINGS PER PLAN.
	APPLY PAVEMENT MARKING TYPE IV ARROW PER CA MUTCD FIGURE 3B-21 (CA). MARKING SHALL BE WHITE THERMOPLASTIC PAINT. PLACE PAVEMENT MARKINGS PER PLAN.
	ACCESSIBLE SIGNAGE PER SHEET DETAIL 12 SHEET 1C7.01.
FA	FIRE ACCESS. PAINT CURB / PAVEMENT RED PER DETAIL 14, SHEET 1C7.01.

PAVING LEGEND

SYMBOL	DESCRIPTION
30	LIGHT DUTY AC PAVEMENT 3" AC OVER 10" CL II AB PER GEOTECHNICAL ENGINEER'S RECOMMENDATION.
31	HEAVY DUTY AC PAVEMENT 4" AC OVER 16" CL II AB PER GEOTECHNICAL ENGINEER'S RECOMMENDATION.
32	PEDESTRIAN CONCRETE PAVEMENT 4" PCC OVER 4" CL II AB PER GEOTECHNICAL ENGINEER'S RECOMMENDATION. SEE DETAIL 01 SHEET 1C7.01.
33	VEHICULAR CONCRETE PAVEMENT 5" PCC OVER 6" CL II AB PER GEOTECHNICAL ENGINEER'S RECOMMENDATION. SEE DETAIL 01 SHEET 1C7.01.
34	AC PAVEMENT OVERLAY OVERLAY 1" ASPHALT ON EXISTING GRIND AREA.
35	AC PAVEMENT SLURRY SEAL FOR AREAS OF PARKING LOT NOT COVERED BY KEYNOTE 32 OR 35, SLURRY SEAL PER LATEST GREENBOOK EDITION SECTION 302-4.
36	ELECTRICAL YARD SURFACING PLACE 1/2-INCH ANGULAR CRUSHED ROCK, 6" MINIMUM THICKNESS, WITH WEED CONTROL FABRIC BENEATH ROCK AREAS.
PA	PLANTING AREA SEE LANDSCAPE PLANS.

CONSTRUCTION NOTES:

KEY NOTE	DESCRIPTION
70	PAINT PARKING STALL STRIPING PER DETAIL 06 SHEET 1C7.01.
71	PAINT AND FURNISH ACCESSIBLE PARKING STALL PER DETAIL 07 SHEET 1C7.01.
72	NO PARKING STRIPING. 4" WIDE WHITE STRIPE AT 45° ANGLE AT 3' SPACING OC. PAINT 12" HIGH LETTER "NO PARKING" WHERE INDICATED.
73	TRUNCATED DOME PAVER PER LANDSCAPE PLANS DETAIL 09 SHEET 1L5.01.
74	DROP-OFF ZONE STRIPING. 4" WIDE WHITE STRIPE AT 45° ANGLE AT 3' SPACING OC.
75	PAINT SINGLE STRIPE IN LOCATION SHOWN, 4" WIDE, COLOR PER PLAN.
76	SUPPLY PRECAST CONCRETE WHEEL STOP PER DETAIL 04 SHEET 1C7.01.
77	ACCESSIBLE PARKING STALL SIGN (VAN WHERE INDICATED) PER DETAIL 12 SHEET 1C7.01.
78	PROTECT (E) SIGN POST AND FOUNDATION. REMOVE (E) SIGNAGE AND REPLACE WITH NEW TOW AWAY SIGN PER DETAIL 13 SHEET 1C7.01.

IDENTIFICATION STAMP
DIV. OF THE STATE ARCHITECT
APP: 02-123848 INC: 01
REVIEWED FOR
SS ☑ FLS ☑ ACS ☑
DATE: 05/21/2026

LPA

ARCHITECTURE ENGINEERING INTERIOR DESIGN
LANDSCAPE ARCHITECTURE PLANNING

949-261-1001 Office
LPADesignStudios.com
5301 California Avenue, Suite 100
Irvine, California 92617

REGISTERED PROFESSIONAL ENGINEER
KATHLEEN M. DRINKAT
R.C.E. 68369
EXP. 9-30-27
STATE OF CALIFORNIA

This document and all other project documents, ideas, aesthetics and designs incorporated therein are instruments of service. All project documents are copyright protected, are the property of LPA, Inc. (LPA) and cannot be lawfully used in whole or in part for any project or purpose except as set forth in the contractual agreement between LPA and its Client. The unauthorized disclosure and/or use of the project documents (including the creation of derivative works), may give rise to liability for copyright infringement, unlawful disclosure, use or misappropriation of property rights held by LPA. The unauthorized use of the project documents will give rise to the recovery of monetary losses and damages including attorney fees and costs for which the unauthorized user will be held liable.
Project documents describe the design intent of the work and are not a representation of as-built or existing conditions. LPA is not responsible for any discrepancies between the project documents and the existing conditions.

© LPA, Inc.

ELKHORN ELEMENTARY SCHOOL
CAMPUS MODERNIZATION INCREMENT 1

10505 DAVIS ROAD, STOCKTON, CA 95209

Developed for
LODI UNIFIED SCHOOL DISTRICT

Revision	Date

Submittal	Date
75% SCHEMATIC DESIGN	08/21/2025
DSA SUBMITTAL	12/18/2025

Job Number	31942
Checked By	CD
Scale	N/A

HORIZONTAL CONTROL, PAVING, SIGNAGE AND STRIPING PLAN

1C5.01

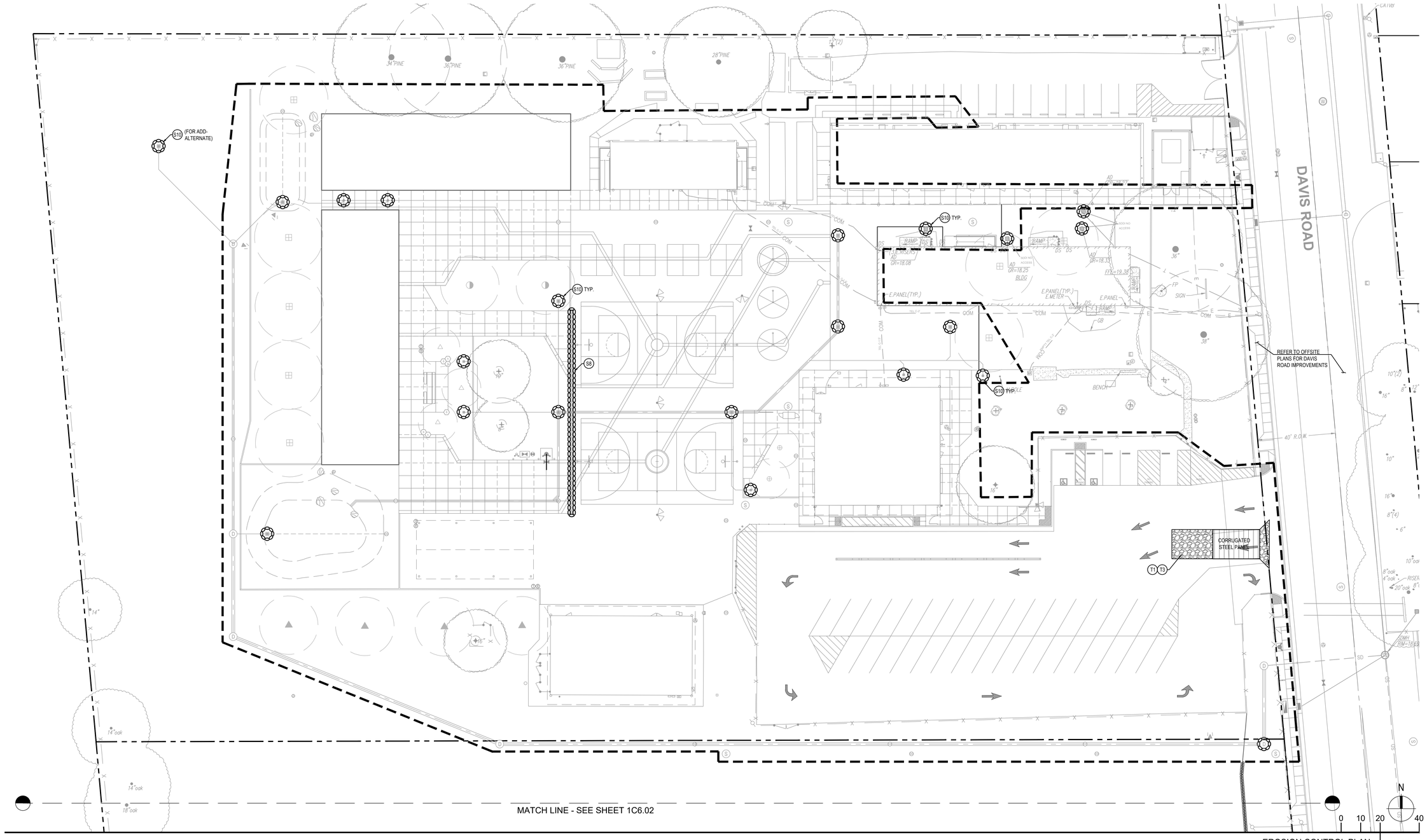

EROSION CONTROL PLAN 1" = 20'

DISCHARGE LOCATIONS

W#	STORMWATER STORAGE (E.G. BIORETENTION) OR CONTAINMENT (E.G. CISTERN)

STORM WATER STORAGE OR CONTAINMENT

D#	DISCHARGE LOCATION

SAMPLING LOCATIONS

B#	POLLUTANT SAMPLE LOCATION - BACKGROUND SAMPLE
C#	POLLUTANT SAMPLE LOCATION - CONTRACTORS YARD
S#	POLLUTANT SAMPLE LOCATION - SITE
R#	POLLUTANT SAMPLE LOCATION - RUN-ON

THE SAMPLE LOCATIONS SHOWN ARE THE MINIMUM REQUIREMENT FOR THE PROJECT SITE AND RISK LEVEL 1. SAMPLE LOCATIONS MAY BE RELOCATED IF FIELD CONDITIONS WILL NOT ALLOW FOR SATISFACTORY SAMPLING. ANY ADJUSTMENTS TO SAMPLING LOCATIONS MUST MEET THE INTENDED PURPOSE ORIGINALLY DESIGNATED FOR THAT LOCATION AND MUST BE DOCUMENTED WITH A SWPPP AMENDMENT FORM.

EROSION CONTROL BMPs: ***

KEY NOTE	DESCRIPTION
E2	EC-2, PRESERVATION OF EXISTING VEGETATION
E3	EC-3, HYDRAULIC MULCH
E4	EC-4, HYDROSEEDING
E5	EC-5, SOIL BINDERS
E6	EC-6, STRAW MULCH
E7	EC-7, GEOTEXTILES AND MATS
E15	EC-15, SOIL PREPARATION/ROUGHENING

*** KEYNOTES NOT SHOWN ON PLAN ARE LISTED AS ALTERNATIVE SURFACE STABILIZATION; COORDINATE USE AND LOCATION WITH QSP.

SEDIMENT CONTROL BMPs:

S1	SE-1, SILT FENCE
S5	SE-5, FIBER ROLLS
S6	SE-6, GRAVEL BAG BERM
S7	SE-7, STREET SWEEPING AND VACUUMING (FOR ALL PAVED AREAS)
S8	SE-8, SANDBAG BARRIER
S10	SE-10, STORM DRAIN INLET PROTECTION

TRACKING CONTROL BMPs:

T1	TC-1, STABILIZED CONSTRUCTION ENTRANCE/EXIT (MODIFIED AS SHOWN)
T3	TC-3, ENTRANCE/OUTLET TIRE WASH

OVERALL SITE BMPs: (PROJECT-WIDE APPLICATION)

EC-1, SCHEDULING
NS-1, WATER CONSERVATION PRACTICES
NS-3, PAVING AND GRINDING OPERATIONS
NS-6, ILLICIT CONNECTION/DISCHARGE
NS-7, POTABLE WATER/IRRIGATION
NS-8, VEHICLE AND EQUIPMENT CLEANING
NS-9, VEHICLE AND EQUIPMENT FUELING
NS-10, VEHICLE AND EQUIPMENT MAINTENANCE
NS-12, CONCRETE CURING
NS-13, CONCRETE FINISHING
SC-10, NON-STORMWATER DISCHARGES
WE-1, WIND EROSION CONTROL
WM-1, MATERIAL DELIVERY AND STORAGE
WM-2, MATERIAL USE
WM-3, STOCKPILE MANAGEMENT
WM-4, SPILL PREVENTION AND CONTROL
WM-5, SOLID WASTE MANAGEMENT
WM-6, HAZARDOUS WASTE MANAGEMENT
WM-7, CONTAMINATED SOIL MANAGEMENT
WM-8, CONCRETE WASTE MANAGEMENT
WM-9, SANITARY/SEPTIC WASTE MANAGEMENT
WM-10, LIQUID WASTE MANAGEMENT

EROSION CONTROL NOTES

-SEE SHEET C0.01 FOR EROSION AND SEDIMENT CONTROL NOTES.

-SEE SHEET C0.01 FOR BMP MAINTENANCE NOTES.

-ALL BMPS PER CALIFORNIA STORMWATER QUALITY ASSOCIATION (CASQA)(UNLESS NOTED OTHERWISE) AND ARE AVAILABLE AT www.casqa.org.

-BMPS "NOT" CALLED OUT PER PLAN, ARE SHOWN FOR REFERENCE AS BMP OPTIONS PER QSP (QUALIFIED SWPPP PRACTITIONER) FIELD RECOMMENDATIONS.

-AT THE COMPLETION OF PROJECT, CONTRACTOR SHALL REMOVE ALL CONSTRUCTION BMPS FROM SITE AND DISPOSE IN A LEGAL MANNER.

LEGEND

SYMBOL	DESCRIPTION
	GRAVEL BAGS AND/OR SANDBAGS PER BMP KEYNOTES
	FIBER ROLL
	SILT FENCE
	APPROXIMATE LIMIT OF GRADING
	FLOW DIRECTION

IDENTIFICATION STAMP
DIV. OF THE STATE ARCHITECT
APP: 02-123848 INC: 01
REVIEWED FOR
SS ☑ FLS ☑ ACS ☑
DATE: 05/21/2026

LPA

ARCHITECTURE ENGINEERING INTERIOR DESIGN
LANDSCAPE ARCHITECTURE PLANNING

949-261-1001 Office

LPADesignStudios.com

5301 California Avenue, Suite 100
Irvine, California 92617

REGISTERED PROFESSIONAL ENGINEER
KATHLEEN M. SHYNAY
R.C.E. 68369
EXP. 9-30-27
STATE OF CALIFORNIA
CIVIL

This document and all other project documents, ideas, aesthetics and designs incorporated therein are instruments of service. All project documents are copyright protected, are the property of LPA, Inc. (LPA) and cannot be lawfully used in whole or in part for any project or purpose except as set forth in the contractual agreement between LPA and its Client. The unauthorized disclosure and/or use of the project documents (including the creation of derivative works), may give rise to liability for copyright infringement, unlawful disclosure, use or misappropriation of property rights held by LPA. The unauthorized use of the project documents will give rise to the recovery of monetary losses and damages including attorney fees and costs for which the unauthorized user will be held liable.
Project documents describe the design intent of the work and are not a representation of as-built or existing conditions. LPA is not responsible for any discrepancies between the project documents and the existing conditions.

© LPA, Inc.

ELKHORN ELEMENTARY SCHOOL
CAMPUS MODERNIZATION INCREMENT 1

10505 DAVIS ROAD, STOCKTON, CA 95209

Developed for
LODI UNIFIED SCHOOL DISTRICT

Revision	Date

Submittal	Date
75% SCHEMATIC DESIGN	08/21/2025
DSA SUBMITTAL	12/18/2025

Job Number	31942
Checked By	CD
Scale	AS SHOWN

EROSION CONTROL PLAN

1C6.01

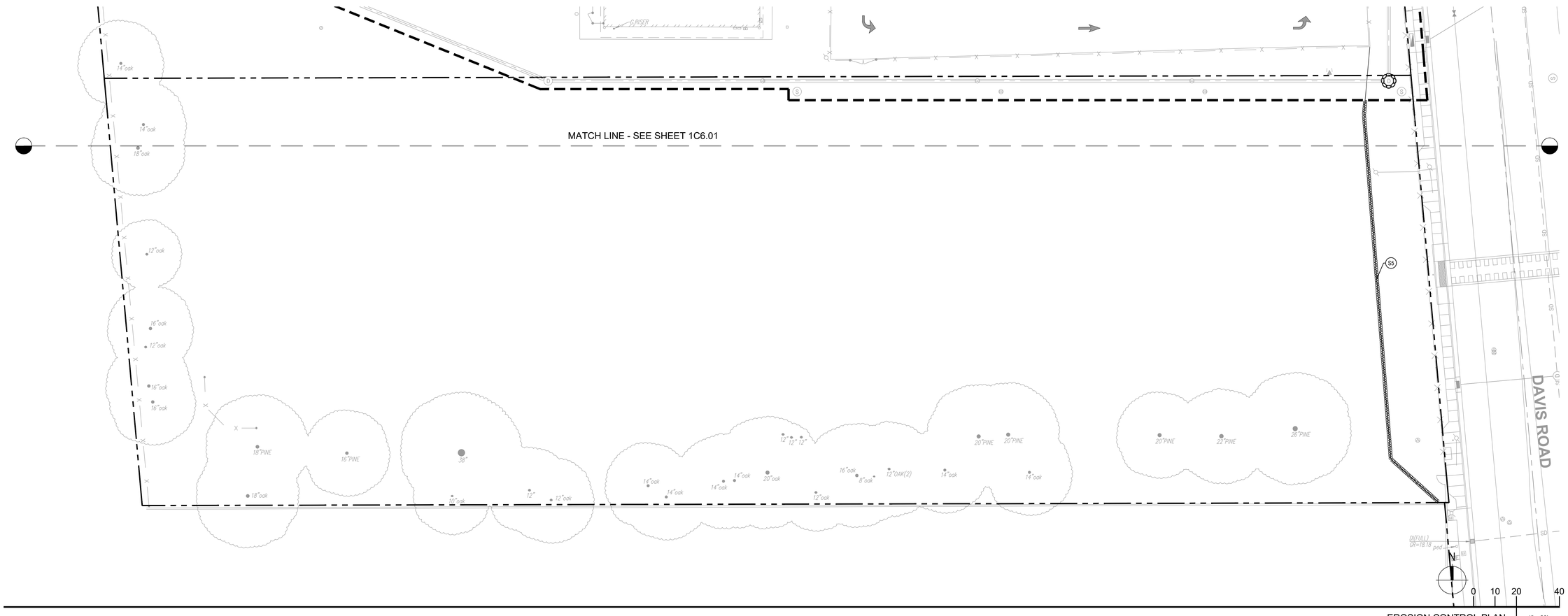

EROSION CONTROL PLAN 1" = 20'

DISCHARGE LOCATIONS

W#	STORMWATER STORAGE (E.G. BIORETENTION) OR CONTAINMENT (E.G. CISTERN)

STORM WATER STORAGE OR CONTAINMENT

D#	DISCHARGE LOCATION

SAMPLING LOCATIONS

B#	POLLUTANT SAMPLE LOCATION - BACKGROUND SAMPLE
C#	POLLUTANT SAMPLE LOCATION - CONTRACTORS YARD
S#	POLLUTANT SAMPLE LOCATION - SITE
R#	POLLUTANT SAMPLE LOCATION - RUN-ON

THE SAMPLE LOCATIONS SHOWN ARE THE MINIMUM REQUIREMENT FOR THE PROJECT SITE AND RISK LEVEL_1. SAMPLE LOCATIONS MAY BE RELOCATED IF FIELD CONDITIONS WILL NOT ALLOW FOR SATISFACTORY SAMPLING. ANY ADJUSTMENTS TO SAMPLING LOCATIONS MUST MEET THE INTENDED PURPOSE ORIGINALLY DESIGNATED FOR THAT LOCATION AND MUST BE DOCUMENTED WITH A SWPPP AMENDMENT FORM.

EROSION CONTROL BMPs: ***

KEY NOTE	DESCRIPTION
E2	EC-2, PRESERVATION OF EXISTING VEGETATION
E3	EC-3, HYDRAULIC MULCH
E4	EC-4, HYDROSEEDING
E5	EC-5, SOIL BINDERS
E6	EC-6, STRAW MULCH
E7	EC-7, GEOTEXTILES AND MATS
E15	EC-15, SOIL PREPARATION/ROUGHENING

*** KEYNOTES NOT SHOWN ON PLAN ARE LISTED AS ALTERNATIVE SURFACE STABILIZATION; COORDINATE USE AND LOCATION WITH QSP.

SEDIMENT CONTROL BMPs:

S1	SE-1, SILT FENCE
S5	SE-5, FIBER ROLLS
S6	SE-6, GRAVEL BAG BERM
S7	SE-7, STREET SWEEPING AND VACUUMING (FOR ALL PAVED AREAS)
S8	SE-8, SANDBAG BARRIER
S10	SE-10, STORM DRAIN INLET PROTECTION

TRACKING CONTROL BMPs:

T1	TC-1, STABILIZED CONSTRUCTION ENTRANCE/EXIT (MODIFIED AS SHOWN)
T3	TC-3, ENTRANCE/OUTLET TIRE WASH

OVERALL SITE BMPs: (PROJECT-WIDE APPLICATION)

EC-1, SCHEDULING
NS-1, WATER CONSERVATION PRACTICES
NS-3, PAVING AND GRINDING OPERATIONS
NS-6, ILLICIT CONNECTION/DISCHARGE
NS-7, POTABLE WATER/IRRIGATION
NS-8, VEHICLE AND EQUIPMENT CLEANING
NS-9, VEHICLE AND EQUIPMENT FUELING
NS-10, VEHICLE AND EQUIPMENT MAINTENANCE
NS-12, CONCRETE CURING
NS-13, CONCRETE FINISHING
SC-10, NON-STORMWATER DISCHARGES
WE-1, WIND EROSION CONTROL
WM-1, MATERIAL DELIVERY AND STORAGE
WM-2, MATERIAL USE
WM-3, STOCKPILE MANAGEMENT
WM-4, SPILL PREVENTION AND CONTROL
WM-5, SOLID WASTE MANAGEMENT
WM-6, HAZARDOUS WASTE MANAGEMENT
WM-7, CONTAMINATED SOIL MANAGEMENT
WM-8, CONCRETE WASTE MANAGEMENT
WM-9, SANITARY/SEPTIC WASTE MANAGEMENT
WM-10, LIQUID WASTE MANAGEMENT

EROSION CONTROL NOTES

-SEE SHEET C0.01 FOR EROSION AND SEDIMENT CONTROL NOTES.

-SEE SHEET C0.01 FOR BMP MAINTENANCE NOTES.

-ALL BMPS PER CALIFORNIA STORMWATER QUALITY ASSOCIATION (CASQA)(UNLESS NOTED OTHERWISE) AND ARE AVAILABLE AT www.casqa.org.

-BMPS "NOT" CALLED OUT PER PLAN, ARE SHOWN FOR REFERENCE AS BMP OPTIONS PER QSP (QUALIFIED SWPPP PRACTITIONER) FIELD RECOMMENDATIONS.

-AT THE COMPLETION OF PROJECT, CONTRACTOR SHALL REMOVE ALL CONSTRUCTION BMPS FROM SITE AND DISPOSE IN A LEGAL MANNER.

LEGEND

SYMBOL	DESCRIPTION
	GRAVEL BAGS AND/OR SANDBAGS PER BMP KEYNOTES
	FIBER ROLL
	SILT FENCE
	APPROXIMATE LIMIT OF GRADING
	FLOW DIRECTION

IDENTIFICATION STAMP
DIV. OF THE STATE ARCHITECT
APP: 02-123848 INC: 01
REVIEWED FOR
SS ☑ FLS ☑ ACS ☑
DATE: 05/21/2026

LPA

ARCHITECTURE ENGINEERING INTERIOR DESIGN
LANDSCAPE ARCHITECTURE PLANNING

949-261-1001 Office

LPADesignStudios.com

5301 California Avenue, Suite 100
Irvine, California 92617

REGISTERED PROFESSIONAL ENGINEER
KATHLEEN M. SHINAN
R.C.E. 68369
EXP. 9-30-27
CIVIL
STATE OF CALIFORNIA

This document and all other project documents, ideas, aesthetics and designs incorporated therein are instruments of service. All project documents are copyright protected, are the property of LPA, Inc. (LPA) and cannot be lawfully used in whole or in part for any project or purpose except as set forth in the contractual agreement between LPA and its Client. The unauthorized disclosure and/or use of the project documents (including the creation of derivative works), may give rise to liability for copyright infringement, unlawful disclosure, use or misappropriation of property rights held by LPA. The unauthorized use of the project documents will give rise to the recovery of monetary losses and damages including attorney fees and costs for which the unauthorized user will be held liable.
Project documents describe the design intent of the work and are not a representation of as-built or existing conditions. LPA is not responsible for any discrepancies between the project documents and the existing conditions.

© LPA, Inc.

ELKHORN ELEMENTARY SCHOOL
CAMPUS MODERNIZATION INCREMENT 1

10505 DAVIS ROAD, STOCKTON, CA 95209

Developed for
LODI UNIFIED SCHOOL DISTRICT

Revision	Date

Submittal	Date
75% SCHEMATIC DESIGN	08/21/2025
DSA SUBMITTAL	12/18/2025

Job Number	31942
Checked By	CD
Scale	AS SHOWN

EROSION CONTROL PLAN

1C6.02

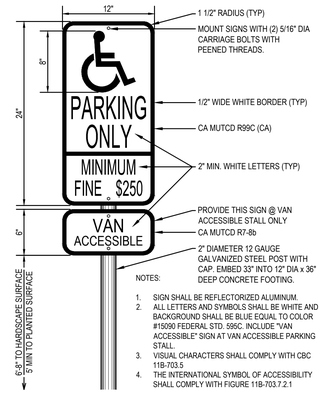

NOTES:

1. SIGN SHALL BE REFLECTORIZED ALUMINUM.
2. ALL LETTERS AND SYMBOLS SHALL BE WHITE AND BACKGROUND SHALL BE BLUE EQUAL TO COLOR #15090 FEDERAL STD. 595C. INCLUDE "VAN ACCESSIBLE" SIGN AT VAN ACCESSIBLE PARKING STALL.
3. VISUAL CHARACTERS SHALL COMPLY WITH CBC 11B-703.5
4. THE INTERNATIONAL SYMBOL OF ACCESSIBILITY SHALL COMPLY WITH FIGURE 11B-703.7.2.1

ACCESSIBLE PARKING SIGN | NTS | 12

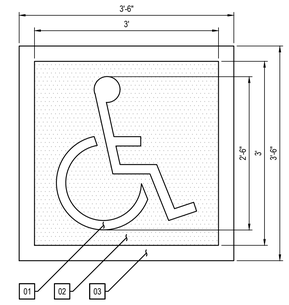

01 2" WIDE WHITE REFLECTORIZED PAINT STRIPING. PER CBC FIGURE 11B-703.7.2.1

02 PAINT BACKGROUND BLUE CONFORMING TO FEDERAL STANDARD 595C COLOR FS 15090

03 3" WIDE WHITE BORDER REFLECTORIZED PAINT STRIPING

NOTES:

A. STENCIL ONE SYMBOL ONTO PARKING SURFACE IN EACH ACCESSIBLE STALL.
B. LOCATE PER ACCESSIBLE PARKING STALL DETAIL.
C. ALL LINES WHITE ON BLUE BACKGROUND.

INTERNATIONAL SYMBOL OF ACCESSIBILITY | NTS | 08

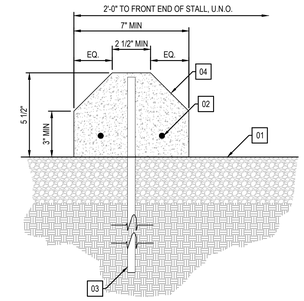

01 FINISHED SURFACE

02 (2) #3 REBAR CONTINUOUS TYP

03 #4 x 18" REBAR AT EACH END

04 PRE-CAST CONC. WHEEL STOP 4'-0" LONG AT SINGLE STALL, 6'-0" LONG AT STALLS SHARED

PRE-CAST CONCRETE WHEEL STOP | NTS | 04

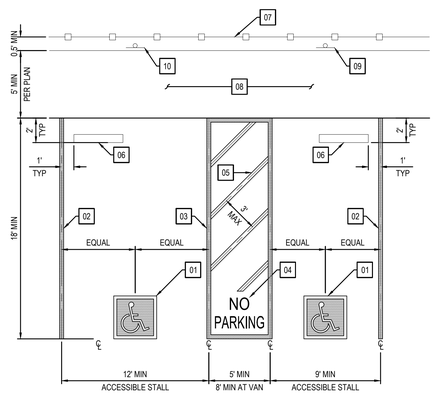

01 INTERNATIONAL SYMBOL OF ACCESSIBILITY EMBLEM. CENTERED AT END OF PARKING STALL. SEE DETAIL 08 THIS SHEET.

02 4" WIDE BLUE STALL STRIPING SEE NOTE BELOW

03 4" WIDE BLUE STRIPING LOADING AND UNLOADING ZONE ACCESS AISLE BORDER SEE NOTE BELOW

04 WITHIN ACCESS AISLE PAINT THE WORDS 'NO PARKING' IN 12" HIGH WHITE LETTERS

05 ACCESS AISLE MARKED WITH 4" WIDE HATCHED LINES

06 PRE-CAST CONCRETE WHEEL STOP SEE DETAIL 04 THIS SHEET

07 (E) FENCE PER PLAN

08 ACCESSIBLE ROUTE; REFER TO 1C7.01 FOR STRIPING AND DETAIL.

09 ACCESSIBLE PARKING SIGN CENTERED ON PARKING STALL PER DETAIL 12 THIS SHEET. SET IN FRONT OF (E) FENCING.

10 VAN ACCESSIBLE PARKING SIGN CENTERED ON PARKING STALL PER PLAN. PER DETAIL 12 THIS SHEET.

NOTE:
BLUE STRIPING SHALL BE COLOR NO. 15090 PER FEDERAL STD. NO. 595C

ACCESSIBLE PARKING STALLS - PERPENDICULAR | NTS | 07

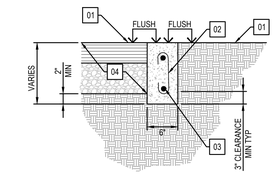

01 FINISHED SURFACE / FINISHED GRADE

02 #3 REBAR @ 36" OC

03 (2) #4 REBAR CONTINUOUS TYP

04 PAVEMENT SECTION PER PLAN

FLUSH CURB | NTS | 03

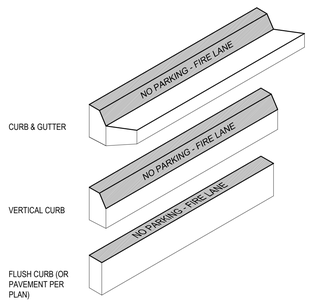

WORDS TO BE STENCILED ON CURB OR PAVEMENT AS SHOWN ABOVE

3" HIGH WHITE PAINTED STENCILED (3/4" STROKE) LETTERS

STENCILING AT EVERY 25 FEET ON CENTER OR PORTION THEREOF

LEGEND

CURBS AND/OR PAVEMENT SHALL BE PAINTED OSHA SAFETY RED

FIRE LANE CURB PAINTING | NTS | 14

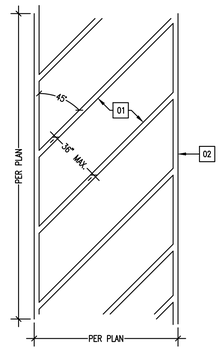

01 4" STRIPES AT 36" MAXIMUM ON CENTER PAINTED WHITE

02 4" BORDER PAINTED BLUE (COLOR NO. 15090 PER FEDERAL STD. NO. 595C

ACCESSIBLE PATH STRIPING | NTS | 10

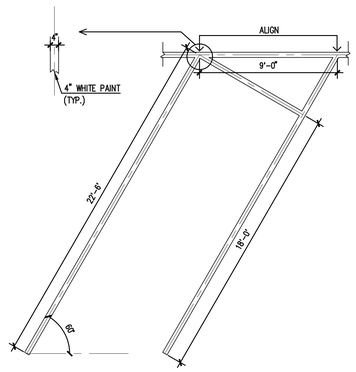

PARKING STALL STRIPING | NTS | 06

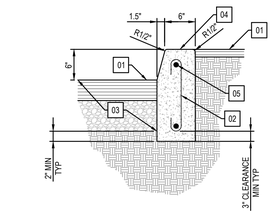

NOTES:

- EXPANSION JOINTS AND CONTROL JOINTS PER SSPWC SECTION 303-5 SHALL BE PLACED IN CURB ALIGNED WITH HARDSCAPE JOINTING PER LANDSCAPE DRAWINGS (EXCEPTION: CONTROL JOINTS SHALL BE MAXIMUM 10.0' INTERVALS).

01 FINISHED SURFACE / FINISHED GRADE

02 #3 REBAR @ 36" OC

03 PAVEMENT SECTION PER PLAN

04 SLOPE 1/4" PER FOOT

05 (2) #4 REBAR CONTINUOUS TYP

VERTICAL CURB | NTS | 02

GENERAL NOTES:

A. THE PIPING BETWEEN THE CHECK VALVE AND THE FDC SHALL BE EQUIPPED WITH AN APPROVED AUTOMATIC DRAIN VALVE IN AREAS SUBJECT TO FREEZING PER NFPA 13 8.17.2.6.1.

B. CHECK VALVE SHALL BE INSTALLED IN AN ACCESSIBLE LOCATION.

C. PRECAST BOX AND EXTENSION(S) INSTALLED PER MANUFACTURE'S RECOMMENDATIONS.

D. PRECAST BOX, STRUCTURE, EXTENSIONS, AND LID SHALL BE H20 LOAD RATED.

E. CONTRACTOR TO VERIFY THE VALVE FLAP IS CLEAR OF DEBRIS AND IN PROPER WORKING ORDER PRIOR TO INSTALLATION.

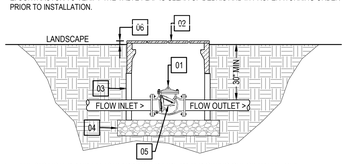

01 UL 312 LISTED AND FM 1210 APPROVED FIRE RATED SWING CHECK VALVE. SIZE PER PLAN.

02 CHRISTY N48 RECTANGULAR ENCLOSURE WITH N48X10 EXTENSION(S) OR APPROVED EQUAL.

03 EXTENSION(S) AS REQUIRED.

04 PLACE APPROXIMATELY 6" OF LEVELED COMPACTED GRAVEL.

05 CONFIRM PLACEMENT OF VALVE, SO THAT THE VALVE DIRECTIONAL ARROW IS POINTING TOWARDS THE OUTLET PIPE.

06 LID TO BE 1" ABOVE LANDSCAPE GRADE TO PREVENT NUISANCE WATER FROM ENTRY.

SWING CHECK VALVE | NTS | 21

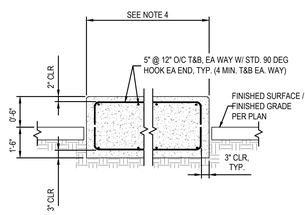

NOTES:

1. CONCRETE f'c = 3000 PSI MIN.
2. CONCRETE PAD MAX. THICKNESS = 2'-0".
3. PROVIDE SUBGRADE PREPARATION BENEATH PAD PER GEOTECHNICAL REPORT.
4. SEE ELECTRICAL DRAWINGS FOR THE LOCATION AND DIMENSIONS OF BASES. COORDINATE MINIMUM PAD EXTENT WITH ANCHORAGE EDGE DISTANCE REQUIREMENTS WHERE PAD SUPPORTS EQUIPMENT.

CONCRETE PAD ON GRADE | NTS | 17

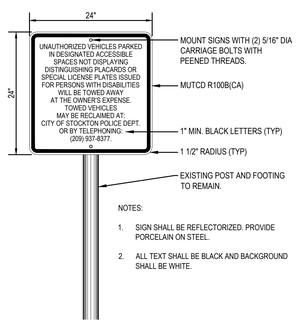

NOTES:

1. SIGN SHALL BE REFLECTORIZED. PROVIDE PORCELAIN ON STEEL
2. ALL TEXT SHALL BE BLACK AND BACKGROUND SHALL BE WHITE.

UNAUTHORIZED VEHICLE SIGN | NTS | 13

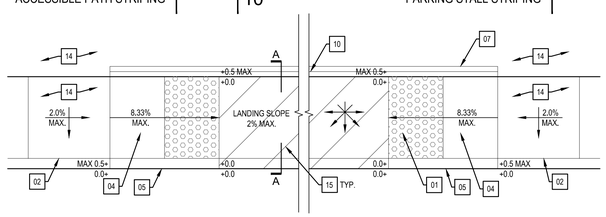

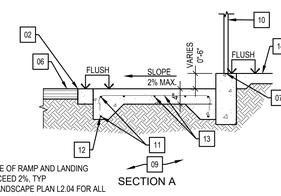

NOTE:
1. CROSS SLOPE OF RAMP AND LANDING SHALL NOT EXCEED 2%, TYP
2. REFER TO LANDSCAPE PLAN L2.04 FOR ALL PEDESTRIAN DIMENSIONS.

01 TRUNCATED DOMES PER LANDSCAPE DETAIL 12 SHEET 1L5.01

02 VERTICAL CURB PER DETAIL 02 THIS SHEET

03 NOT USED.

04 RAMP SURFACE SHALL HAVE HEAVY BROOM FINISH PERPENDICULAR TO LINE OF TRAVEL.

05 TRANSITION VERTICAL CURB TO FLUSH (TOP OF CURB TO MATCH RAMP SLOPE)

06 ASPHALT PAVEMENT

07 CONCRETE CURB PER LANDSCAPE PLAN

08 SLOPE 1/4" PER FOOT

09 BASE MATERIAL AND COMPACTED SUBGRADE

10 GUIDE RAIL PER LANDSCAPE PLAN

11 (2) #4 BAR CONTINUOUS

12 #4 BARS @ 36" O.C. TYP

13 #4 BARS @ 18" O.C. E.W. TYP

14 CONCRETE PAVING PER LANDSCAPE PLAN

15 STRIPING PER HORIZONTAL CONTROL PLAN

ACCESSIBLE LOADING ZONE AREA | NTS | 05

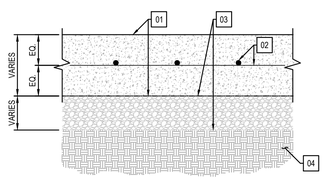

NOTES:

- REFER TO LANDSCAPE DRAWINGS FOR COLOR, FINISH, PATTERN, TEXTURE, CONTROL JOINTS, EXPANSION JOINTS, AND THICKENED EDGE.
- CONCRETE DOWELING PER LANDSCAPE DRAWINGS AND PROJECT GEOTECHNICAL REPORT RECOMMENDATIONS.
- DO NOT ALLOW CONCRETE OVER-POUR INTO ADJACENT PLANTERS.
- MINIMUM CONCRETE STRENGTH PER SPECIFICATION SECTION 321313.

01 CONCRETE PAVING PEDESTRIAN: 4" THICK VEHICULAR: 5" THICK

02 REINFORCEMENT (BOTH PEDESTRIAN AND VEHICULAR): #4 BARS @ 24" O.C. AND E.W.

03 COMPACTED BASE COURSE PEDESTRIAN: 4" THICK CL II AB VEHICULAR: 6" THICK CL II AB

04 SUBGRADE PREPARATION PER PROJECT GEOTECHNICAL REPORT

CONCRETE PAVEMENT | NTS | 01

IDENTIFICATION STAMP
DIV. OF THE STATE ARCHITECT
APP: 02-123848 INC: 01
REVIEWED FOR
SS ☑ FLS ☑ ACS ☑
DATE: 05/21/2026

LPA

ARCHITECTURE ENGINEERING INTERIOR DESIGN
LANDSCAPE ARCHITECTURE PLANNING

949-261-1001 Office

LPADesignStudios.com

5301 California Avenue, Suite 100
Irvine, California 92617

REGISTERED PROFESSIONAL ENGINEER
KATHLEEN M. SHINAN
R.C.E. 68369
EXP. 9-30-27
CIVIL
STATE OF CALIFORNIA

This document and all other project documents, ideas, aesthetics and designs incorporated therein are instruments of service. All project documents are copyright protected, are the property of LPA, Inc. (LPA) and cannot be lawfully used in whole or in part for any project or purpose except as set forth in the contractual agreement between LPA and its Client. The unauthorized disclosure and/or use of the project documents (including the creation of derivative works), may give rise to liability for copyright infringement, unlawful disclosure, use or misappropriation of property rights held by LPA. The unauthorized use of the project documents will give rise to the recovery of monetary losses and damages including attorney fees and costs for which the unauthorized user will be held liable.
Project documents describe the design intent of the work and are not a representation of as-built or existing conditions. LPA is not responsible for any discrepancies between the project documents and the existing conditions.

© LPA, Inc.

ELKHORN ELEMENTARY SCHOOL
CAMPUS MODERNIZATION INCREMENT 1

10505 DAVIS ROAD, STOCKTON, CA 95209

Developed for
LODI UNIFIED SCHOOL DISTRICT

Revision	Date

Submittal	Date
75% SCHEMATIC DESIGN	08/21/2025
DSA SUBMITTAL	12/18/2025

Job Number	31942
Checked By	CD
Scale	NTS

DETAILS

1C7.01

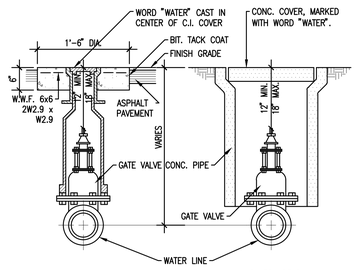

VALVE BOX — NTS — 24

MANHOLE COMPONENTS CONFORM TO CURRENT SPECIFICATIONS, ASTM C-478 AND AASHTO M199.

FLAT TOPS AND BASE SLABS ARE DESIGNED FOR AASHTO HS-20 WHEEL LOADING.

IN LIEU OF PRECAST BASE, CAST-IN-PLACE CONCRETE MAY BE USED. CONCRETE F'c = 4000 PSI AT 28 DAYS.

FOR COMPLETE DESIGN AND PRODUCT INFORMATION, CONTACT JENSEN PRECAST OR EQUIVALENT.

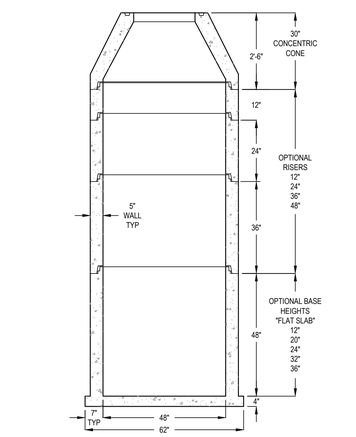

48" PRECAST MANHOLE — NTS — 22

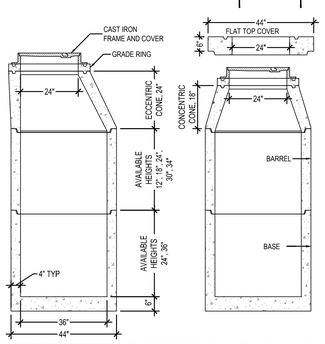

MANHOLE COMPONENTS CONFORM TO CURRENT SPECIFICATIONS, ASTM C-478 AND AASHTO M199. FLAT TOPS AND BASE SLABS ARE DESIGNED FOR AASHTO HS-20 WHEEL LOADING. FOR COMPLETE DESIGN AND PRODUCT INFORMATION CONTACT JENSEN PRECAST OR EQUIVALENT MANUFACTURER.

IN LIEU OF PRECAST BASE, CAST-IN-PLACE CONCRETE MAY BE USED. CONCRETE F'c = 4000 PSI AT 28 DAYS.

36" I.D. X 4" WALL SDMH — NTS — 21

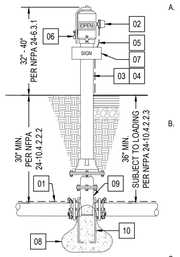

GENERAL NOTES:

A. ALL FERROUS PIPE AND FITTINGS BURIED UNDERGROUND SHALL BE PROTECTED WITH A LOOSE 8-MIL THICK PLASTIC POLYETHYLENE TUBE IN ACCORDANCE WITH AWWA C105 (WRAPPING THE PIPE IN POLYETHYLENE SHEETING IS NOT ACCEPTABLE). THE ENDS OF THE TUBE AND ANY SPLICES MADE FOR TEES OR OTHER PIPE COMPONENTS SHALL BE TIGHTLY SEALED WITH 2-INCH-WIDE POLYETHYLENE ADHESIVE TYPE. POLYKEN 900, SCOTCH WRAP 50, OR APPROVED EQUAL.

B. ALL BOLTS USED FOR UNDERGROUND CONNECTIONS, INCLUDING T BOLTS, SHALL BE 316 STAINLESS STEEL. ASPHALTIC SEALANTS (AND OTHER OPAQUE SEALANTS) SHALL NOT BE USED TO COAT BOLTS AS TO ENSURE BOLTS CAN STILL BE VERIFIED AS 316 STAINLESS STEEL DURING INSPECTION. ALL FERROUS FITTINGS (WITH THE EXCEPTION OF 316 STAINLESS STEEL) SHALL BE CLEANED AND THOROUGHLY COATED WITH ASPHALT OR OTHER CORROSION RETARDING MATERIAL AFTER ASSEMBLY AND PRIOR TO THE INSTALLATION OF POLYETHYLENE TUBE.

C. CONCRETE POURED AGAINST PIPE FITTINGS SHALL BE PLACED SO THAT VALVES AND FITTINGS ARE ACCESSIBLE FOR REPAIR.

01 TRACER WIRE REQUIRED WHEN NON-METALLIC PIPE IS USED.
02 TAMPER SWITCH (EXTEND ELECTRICAL TO FIRE CONTROL PANEL).
03 FLANGE POST INDICATOR VALVE & POST (FM-UL APPR.) LOCKED AND SECURED IN OPEN POSITION.
04 PIV SHALL BE PAINTED OSHA SAFETY RED WITH TWO COATS OF RUST-OLEUM HIGH PERFORMANCE PROTECTIVE ENAMEL PER MANUFACTURE'S RECOMMENDATIONS.
05 TAMPER SWITCH ELECTRICAL CONDUIT. SEE FIRE ALARM DRAWINGS FOR CONTINUATION.
06 FRANGIBLE PAD LOCK
07 PIV IDENTIFICATION SIGN PER DETAIL 14.
08 THRUST BLOCK PER DETAIL 15.
09 IRON BODY GATE VALE (RESILIENT WEDGE, NON-RISING STEM, INDICATOR POST, FLG. X FLG.).
10 ANCHOR ROD PER THRUST BLOCK DETAIL 15.

PIV (POST INDICATOR VALVE) — NTS — 20

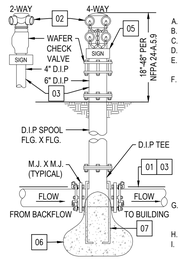

GENERAL NOTES:

A. FDC SHALL BE ACCESSIBLE AND VISIBLE.
B. FDC INLETS SHALL FACE FIRE LANE.
C. 3FT. MINIMUM CLEARANCE AROUND FDC.
D. FDC SHALL HAVE A IDENTIFICATION SIGN.
E. FDC OUTLET VALVES SHALL HAVE 2.5" NATIONAL STANDARD HOSE THREADS.
F. ALL BOLTS USED FOR UNDERGROUND CONNECTIONS, INCLUDING T BOLTS, SHALL BE 316 STAINLESS STEEL. ASPHALTIC SEALANTS (AND OTHER OPAQUE SEALANTS) SHALL NOT BE USED TO COAT BOLTS AS TO ENSURE BOLTS CAN STILL BE VERIFIED AS 316 STAINLESS STEEL DURING INSPECTION. ALL FERROUS FITTINGS (WITH THE EXCEPTION OF 316 STAINLESS STEEL) SHALL BE CLEANED AND THOROUGHLY COATED WITH ASPHALT OR OTHER CORROSION RETARDING MATERIAL AFTER ASSEMBLY AND PRIOR TO THE INSTALLATION OF POLYETHYLENE TUBE.
G. CONCRETE POURED AGAINST PIPE FITTINGS SHALL BE PLACED SO THAT VALVES AND FITTINGS ARE ACCESSIBLE FOR REPAIR.
H. NO PAINT ON FDC INLET THREADS ALLOWED.
I. SYSTEM DEMANDS GREATER THAN 500 GPM SHALL PROVIDE A MIN. 6" RISER AND A 4-WAY CONNECTION.

01 TRACER WIRE REQUIRED WHEN NON-METALLIC PIPE IS USED.
02 6" X 2.5" FOUR-WAY SQUARE WICLAPPER OR 4"X2.5" TWO-WAY WICLAPPER. SIZE AS NOTED PER PLAN.
03 PIPE MATERIAL PER LOCAL FIRE AUTHORITY.
04 FDC SHALL BE PAINTED OSHA SAFETY RED WITH TWO COATS OF RUST-OLEUM HIGH PERFORMANCE PROTECTIVE ENAMEL PER MANUFACTURE'S RECOMMENDATIONS.
05 FDC IDENTIFICATION SIGN PER DETAIL 14.
06 THRUST BLOCK PER DETAIL 15.
07 ANCHOR ROD PER THRUST BLOCK DETAIL 15.

FDC (FIRE DEPARTMENT CONNECTION) — NTS — 16

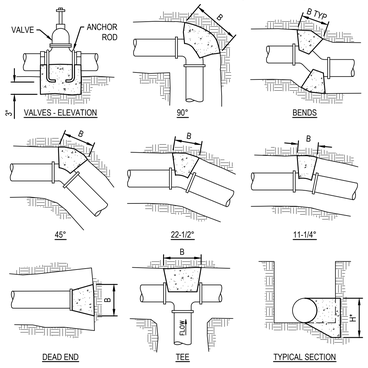

* BLOCK HEIGHT (H) SHOULD BE CHOSEN SO THAT THE CALCULATED BLOCK WIDTH (B) VARIES BETWEEN ONE AND TWO TIMES THE HEIGHT, NFPA A.10.6.1.

NOTES:

1. THRUST BLOCKS SHALL BE USED FOR PLASTIC PIPE 4" DIAMETER OR LARGER.
2. THRUST BLOCK INSTALLATION PER SSPWC SECTION 306 (LATEST EDITION).
3. THRUST BLOCKS SHALL BE PCC, 450-C-2000 PER SSPWC SECTION 201 (LATEST EDITION).
4. ANCHOR RODS SHALL BE GALVANIZED STEEL, 1/2" DIAMETER, WRAPPED AROUND PIPE.
5. ALL VIEWS ARE PLAN VIEWS UNLESS OTHERWISE NOTED.
6. THRUST BLOCK AREAS ARE BASED ON 200 PSI PRESSURE AND 2,000 PSF ALLOWABLE SOIL BEARING PRESSURE. THRUST BLOCK SIZING PER 2022 NFPA 24, ANNEX A, SECTION A.10.6.1.
7. THRUST BLOCKS SHALL BE INSTALLED AT EVERY CHANGE OF DIRECTION.

HORIZONTAL BEND THRUST BLOCK REQUIRED TOTAL BEARING AREA

PIPE SIZE (IN)	11 1/4° BEND	22 1/2° BEND	45° BEND	90° BEND	DEAD END	TEE
	AREA (SF)	AREA (SF)	AREA (SF)	AREA (SF)	AREA (SF)	AREA (SF)
4	0.5	1.1	2.1	3.8	2.7	2.7
6	1.1	2.2	4.3	7.9	5.6	5.6
8	1.9	3.8	7.4	13.6	9.6	9.6
10	2.8	5.7	11.1	20.5	14.5	14.5
12	4.0	8.0	15.7	29.0	20.5	20.5

THRUST BLOCKS FOR PLASTIC PIPE - 2000 PSF SOIL BEARING CAPACITY — NTS — 15

01 NON-RESIDENTIAL WET BARREL FIRE HYDRANT WITH (2) 4" AND (1) 2-1/2" FIRE HOSE OUTLETS.
02 CONSTRUCT 6" THICK CONCRETE PAD REINFORCED WITH W.W.F. 1.6 X 1.6.
03 C-900 DR-18 PVC OR DIP WHERE REQUIRED. LATERAL SIZE PER PLAN. 6 - INCH MINIMUM.
04 8" X 6" REDUCER, IF REQUIRED, WITH P.O X F.E. (PVC LATERAL) OR M.J. X M.J. (DI LATERAL).
05 6" OR 8" F.E. X P.O. VALVE.
06 VALVE BOX PER DETAIL 24.
07 THRUST BLOCK PER DETAIL 15.
08 6" CAST IRON BREAK AWAY SPOOL WITH ONE 0.25"-V BREAK OFF GROOVE. SCORE LINE ABOVE PAD.
09 6" DUCTILE IRON RISER.
10 HEX HEAD STAINLESS STEEL BREAKAWAY SHEAR BOLTS AND NUTS (ASTM A307) WITH 3/4" NC THREAD AT FLANGE. HEX HEAD AT BOTTOM OF FLANGE.
11 BODY OF FIRE HYDRANT SHALL BE PAINTED WITH TWO COATS OF RUST-OLEUM HIGH PERFORMANCE PROTECTIVE ENAMEL PER MANUFACTURE'S RECOMMENDATIONS. PAINT COLOR IS YELLOW OR RED PER CITY OF STOCKTON REQUIREMENTS.
12 KEYED GATE VALVE STEM EXTENSION.

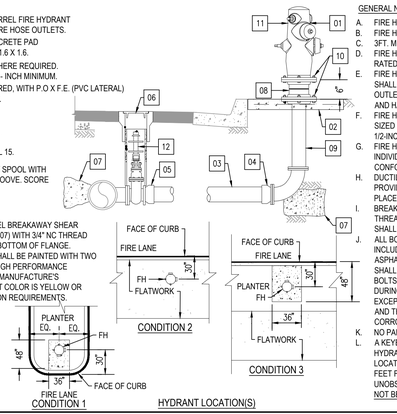

GENERAL NOTES:

A. FIRE HYDRANT SHALL BE ACCESSIBLE AND VISIBLE.
B. FIRE HYDRANT OUTLETS SHALL FACE FIRE LANE.
C. FIRE HYDRANT SHALL BE INDUSTRIAL OR COMMERCIAL RATED.
D. FIRE HYDRANT FOR INDUSTRIAL OR COMMERCIAL USE SHALL HAVE ONE 2 1/2-INCH OUTLET AND TWO 4-INCH OUTLETS. ALL OUTLETS SHALL HAVE REMOVABLE CAPS AND HAVE NATIONAL STANDARD HOSE THREADS.
E. FIRE HYDRANTS SHALL BE PROVIDED WITH 1 1/2-INCH SIZED PENTAGON-SHAPED OPERATING NUT AND 1 1/2-INCH CAP NUTS.
F. FIRE HYDRANTS SHALL BE WET-BARREL TYPE, WITH INDIVIDUAL VALVES FOR EACH OUTLET, AND SHALL CONFORM TO THE REQUIREMENTS OF AWWA C-503.
G. DUCTILE IRON BREAK-AWAY SPOOL SHALL BE BE PROVIDED FOR THE HYDRANT. THE SCORE SHALL BE PLACED ABOVE GRADE.
H. BREAK-AWAY BOLTS SHALL BE INSTALLED WITH THE THREADS TOWARDS THE TOP OF THE HYDRANT. BOLTS SHALL BE PACKED WITH CLEAR SILICON SEALANT.
I. ALL BOLTS USED FOR UNDERGROUND CONNECTIONS, INCLUDING T BOLTS, SHALL BE 316 STAINLESS STEEL. ASPHALTIC SEALANTS (AND OTHER OPAQUE SEALANTS) SHALL NOT BE USED TO COAT BOLTS AS TO ENSURE BOLTS CAN STILL BE VERIFIED AS 316 STAINLESS STEEL DURING INSPECTION. ALL FERROUS FITTINGS (WITH THE EXCEPTION OF 316 STAINLESS STEEL) SHALL BE CLEANED AND THOROUGHLY COATED WITH ASPHALT OR OTHER CORROSION RETARDING MATERIAL AFTER ASSEMBLY.
J. NO PAINT ON FIRE HYDRANT OUTLET THREADS ALLOWED.
K. A KEYED GATE VALVE SHALL BE PROVIDED FOR THE FIRE HYDRANT IN AN ACCESSIBLE LOCATION. VALVE SHALL BE LOCATED NO CLOSER THAN 5 AND NO FURTHER THAN 20 FEET FROM THE HYDRANT IN AN AREA THAT IS UNOBSTRUCTED AND CLEARLY VISIBLE. VALVES SHALL NOT BE LOCATED IN PARKING STALLS.
L.

STANDARD PRIVATE FIRE HYDRANT — NTS — 14

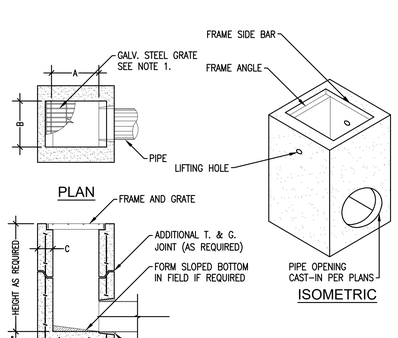

OLDCASTLE PRECAST GROUP OR EQUIVALENT DROP INLET TABLE

MODEL No.	CPC MODEL REF.	A		B		C	
		IN	MM	IN	MM	IN	MM
CB1212TE	EK	12	300	12	300	4	100
CB1818TE	CK	18	450	18	450	5	125
CB1824TE	1K•	18	450	24	600	5	125
CB2424TE	2K	24	600	24	600	5	125
CB2430TE	3K	24	600	30	750	5	125
CB3030TE	5K	30	750	30	750	6	150
CB2436TE	1L	24	600	36	900	6	150
CB3636TE	1M	36	900	36	900	6	150
CB2448TE	3L	24	600	48	1200	6	150
CB3648TE	3M	36	900	48	1200	6	150
CB4848TE	1R	48	1200	48	1200	6	150

NOTES :

1. FRAMES AND GRATES TO BE H20 TRAFFIC LOAD RATED. ALL GRATES ARE BICYCLE PROOF.
2. ⅜" MAX. GRATE OPENINGS IN PATH–OF–TRAVEL IN ALL DIRECTIONS WHERE PATH–OF–TRAVEL IS MULTI–DIRECTIONAL.

OLDCASTLE PRECAST PRECAST (www.oldcastleprecast.com) DRAIN INLET W–IN–12 OR EQUIVALENT

DRAIN INLET — NTS — 13

1 LARGE CAPACITY AREA DRAIN/ FLOOR DRAIN, ZURN MODEL FD2360
2 8" CAST IRON GRATE. TOP OF GRATE (TG) ELEVATION PER PLAN
3 4" PVC RISER
4 WYE FITTING (OR 90–DEGREE ELBOW IF END OF LINE)
5 STORM PIPE AS SHOWN ON PLAN
6 INVERT ELEVATION PER PLAN
7 PLUG IF AT END OF RUN

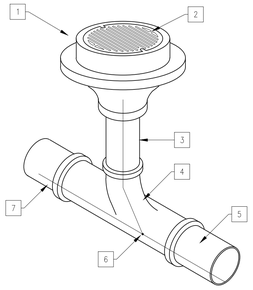

CAST IRON AREA DRAIN — NTS — 12

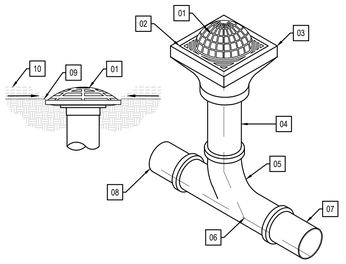

01 12" SQUARE BLACK ATRIUM GRATE. NDS PART NO. 1290 OR APPROVED EQUAL
02 TG ELEVATION PER PLAN
03 12" NDS PART NO. 1230 AND 1243 OR APPROVED EQUAL
04 4" PVC SDR 35 RISER
05 WYE FITTING
06 INVERT ELEVATION PER PLAN
07 STORM DRAIN PER PLAN
08 PLUG IF AT END OF RUN
09 GRATE RIM FLUSH WITH FINISHED GRADE UNLESS NOTED OTHERWISE
10 MATERIAL PER LANDSCAPE PLANS

12" SQUARE ATRIUM PLANTER DRAIN — NTS — 11

01 PLACE ROCK COBBLE AROUND DRAIN INLET TO RIM (REFER TO LANDSCAPE PLANS FOR MATERIAL). SIDE WALL OF DRAIN INLET SHALL NOT BE VISIBLE.
02 SOIL SEPARATOR FILTER FABRIC 'MIRAFI' 140N
03 TOP OF MULCH LAYER.
04 BIORETENTION SOIL PER DETAIL 06, THIS SHEET.
05 WATER PONDING LEVEL AT 6" ABOVE FINISHED GRADE OF BASIN.
06 BASIN DRAIN INLET. TOP OF GRATE INSTALLED FLUSH WITH WATER PONDING LEVEL.

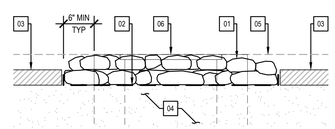

NOTE: SEE BIORETENTION BASIN DETAIL 17, SHEET C7.01

COBBLE AT BASIN DRAIN INLET — NTS — 10

01 BIOTREATMENT SOIL LAYER PER SPECIFICATIONS.
02 BASIN LINER: MIRAFI 140N SOIL SEPARATOR FILTER FABRIC BETWEEN ROCK LAYER AND EXISTING SOIL.
03 12" MIN THICKNESS OF 3/4" CRUSHED CLEAN DRAIN ROCK. PLACE MIRAFI 140N SOIL SEPARATOR FILTER FABRIC BETWEEN ROCK LAYER AND SOIL MIX LAYER.
04 6" PERFORATED SUBDRAIN WITHIN ROCK LAYER, PERFORATIONS FACING DOWN. TRANSITION TO SOLID PIPE OUTSIDE DRAIN ROCK.
05 FINISHED GRADE OF BASIN. SEE GRADING PLAN.
06 MULCH MATERIAL PER LANDSCAPE PLANS.
07 PLANT MATERIAL PER LANDSCAPE PLANS.
08 STORM CLEANOUT PLACED 6" MINIMUM BEYOND TOP OF SLOPE PER DETAIL 04 THIS SHEET.
09 COMPACTED SUBGRADE PER GEOTECH RECOMMENDATIONS.
10 DRAIN INLET OR MANHOLE PER UTILITY PLAN. SEE STORM DRAIN PLANS FOR TOP OF GRATE ELEVATIONS.
11 CURB / PAVEMENT WHERE SHOWN ON PLAN.
12 PLACE COBBLES AROUND BASIN DRAIN INLET PER DETAIL 06 THIS SHEET.
13 STORM DRAIN EXIT PIPE PER STORM DRAIN PLAN.

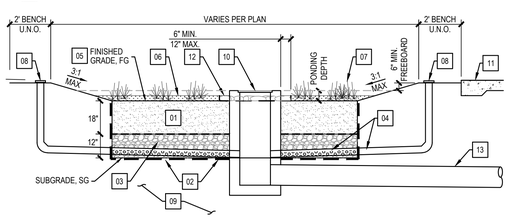

BIORETENTION BASIN — NTS — 05

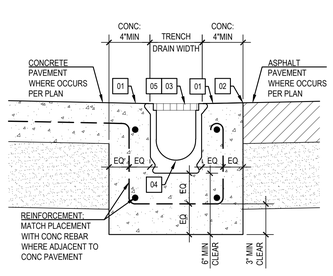

01 CAST IN PLACE CONCRETE AT FINISHED SURFACE SLOPE TO GRATE
02 JOINTS PER LANDSCAPING AND ARCHITECTURAL PLANS.
03 TOP OF GRATE (TG) ELEVATION
04 INVERT (INV) ELEVATION. SLOPE OF INVERT AS SHOWN ON PLANS
05 TRENCH GRATE: ACO SYSTEMS TYPE 447D (RATED ACCESSIBLE AND FOR LIGHT DUTY TRAFFIC).
06 TRENCH DRAIN CHANNEL: ACO KS100 KLASSIK DRAIN SYSTEM, SLOPED CHANNELS

TRENCH DRAIN — NTS — 08

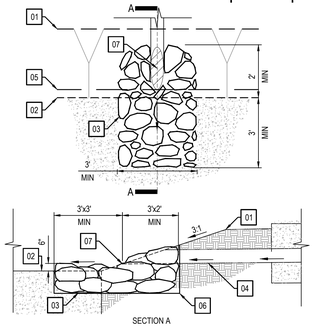

01 TOP OF BASIN SLOPE
02 BASIN FINISHED GRADE
03 COBBLE MATERIAL PER LANDSCAPE PLANS.
04 STORM DRAIN LATERAL PER PLAN.
05 PIPE OUTLET INVERT: 6" MIN ABOVE FINISHED GRADE OF BASIN.
06 SOIL SEPARATOR FABRIC. MIRAFI 140N OR EQUIVALENT.
07 PROVIDE BLACK 3:1 MITERED DRAIN GRATE BY MITERED DRAIN. INC OR APPROVED EQUAL. SIZE TO MATCH PIPE DIAMETER.

STORM DRAIN BASIN OUTFALL — NTS — 07

01 TOP OF GRATE (TG) ELEVATION PER PLAN. TOP OF GRATE TO BE INSTALLED FLUSH.
02 PRECAST CONCRETE DRAIN INLET PER DETAIL 13, THIS SHEET.
03 FINISHED GRADE (FG) ELEVATION PER PLAN
04 PERFORATED SUBDRAIN PIPE PER DETAIL 09, THIS SHEET
05 STORM PIPE OPENING
06 SEE PLAN FOR PONDING DEPTH
07 PLACE COBBLES AROUND DRAIN INLET PER DETAIL 10, THIS SHEET

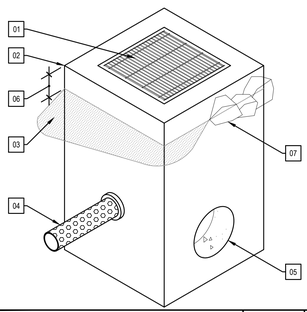

DRAIN INLET AT BASIN — NTS — 06

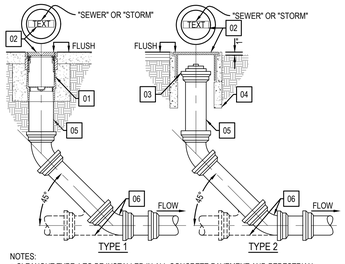

NOTES:

- CLEANOUT TYPE 1 TO BE INSTALLED IN ALL CONCRETE PAVEMENT AND PEDESTRIAN HARDSCAPE AREAS. LID SHALL BE INSTALLED FLUSH WITH FINISHED SURFACE. PROVIDE PCC COLLAR BELOW HARDSCAPE. PER MANUFACTURES REQUIREMENTS.
- CLEANOUT TYPE 2 TO BE INSTALLED IN ASPHALT PAVEMENT AND PLANTED AREAS. CLEANOUT RIM TO BE INSTALLED FLUSH WITH FINISHED SURFACE OF AC PAVING OR 1" ABOVE FINISHED GRADE IN PLANTER AREAS AS APPLIES.

01 ZURN ZN-1400-HD-SM OR APPROVED EQUAL
02 CLEANOUT LID WITH "SEWER" OR "STORM"
03 SOLVENT WELD X F.I.P.T. COUPLING WITH M.I.P.T. PLUG WITH MALE SQUARE NUT.
04 BROOKS 1-RT CLEANOUT OR APPROVED EQUAL
05 PIPE SIZE PER PLAN
06 WYE FITTING AT LINE CLEANOUT, 45° ELBOW AT TERMINAL CLEANOUT

CLEANOUT — NTS — 04

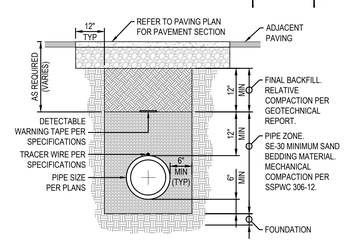

NOTES:

1. ALL PIPE SYSTEMS SHALL BE INSTALLED IN ACCORDANCE WITH ASTM D2774, "UNDERGROUND INSTALLATION OF THERMOPLASTIC PRESSURE PIPING", LATEST EDITION.
2. 36" MINIMUM COVER REQUIRED FOR INSTALLATIONS UNDER HARDSCAPE. 30" MINIMUM COVER FOR INSTALLATIONS UNDER PLANTED AREAS.
3. IF UNSTABLE FOUNDATION SOIL IS ENCOUNTERED, THE GEOTECHNICAL FIELD INSPECTOR SHALL DETERMINE OVEREXCAVATION DEPTH AND FOUNDATION RE-FILL MATERIAL.
4. CONTRACTOR SHALL PROVIDE HAND EXCAVATED "BELL HOLE" FOR EACH PIPE JOINT SO THAT THE WEIGHT OF PIPE DOES NOT BEAR ON THE BELL. CONTRACTOR SHALL RE-FILL AND HAND-TAMP EACH "BELL HOLE" PRIOR TO COMPLETING THE PLACEMENT OF PIPE BEDDING.

PIPE TRENCH - WATER — NTS — 03

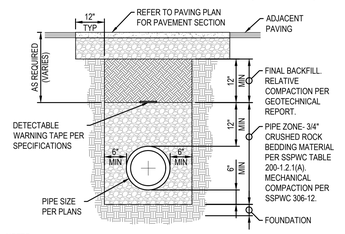

NOTES:

1. ALL PIPE SYSTEMS SHALL BE INSTALLED IN ACCORDANCE WITH ASTM D2321, "STANDARD PRACTICE FOR UNDERGROUND INSTALLATION OF THERMOPLASTIC PIPE FOR SEWERS AND OTHER GRAVITY FLOW APPLICATIONS", LATEST EDITION.
2. IF UNSTABLE FOUNDATION SOIL IS ENCOUNTERED, THE GEOTECHNICAL FIELD INSPECTOR SHALL DETERMINE OVEREXCAVATION DEPTH AND FOUNDATION RE-FILL MATERIAL.
3. CONTRACTOR SHALL PROVIDE HAND EXCAVATED "BELL HOLE" FOR EACH PIPE JOINT SO THAT THE WEIGHT OF PIPE DOES NOT BEAR ON THE BELL. CONTRACTOR SHALL RE-FILL AND HAND-TAMP EACH "BELL HOLE" PRIOR TO COMPLETING THE PLACEMENT OF PIPE BEDDING.
4. MEASURES SHOULD BE TAKEN TO PREVENT MIGRATION OF NATIVE FINES INTO BACKFILL MATERIAL WHEN REQUIRED BY GEOTECHNICAL REPORT. FILTER FABRIC IF USED SHALL SATISFY THE REQUIREMENTS FOR A TYPE 180N, NONWOVEN GEOTEXTILE PER SSPWC 213-2 (LATEST EDITION).

PIPE TRENCH - SEWER — NTS — 02

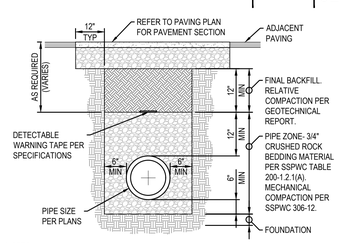

NOTES:

1. ALL PIPE SYSTEMS SHALL BE INSTALLED IN ACCORDANCE WITH ASTM D2321, "STANDARD PRACTICE FOR UNDERGROUND INSTALLATION OF THERMOPLASTIC PIPE FOR SEWERS AND OTHER GRAVITY FLOW APPLICATIONS", LATEST EDITION.
2. IF UNSTABLE FOUNDATION SOIL IS ENCOUNTERED, THE GEOTECHNICAL FIELD INSPECTOR SHALL DETERMINE OVEREXCAVATION DEPTH AND FOUNDATION RE-FILL MATERIAL.
3. CONTRACTOR SHALL PROVIDE HAND EXCAVATED "BELL HOLE" FOR EACH PIPE JOINT SO THAT THE WEIGHT OF PIPE DOES NOT BEAR ON THE BELL. CONTRACTOR SHALL RE-FILL AND HAND-TAMP EACH "BELL HOLE" PRIOR TO COMPLETING THE PLACEMENT OF PIPE BEDDING.
4. MEASURES SHOULD BE TAKEN TO PREVENT MIGRATION OF NATIVE FINES INTO BACKFILL MATERIAL WHEN REQUIRED BY GEOTECHNICAL REPORT. FILTER FABRIC IF USED SHALL SATISFY THE REQUIREMENTS FOR A TYPE 180N, NONWOVEN GEOTEXTILE PER SSPWC 213-2 (LATEST EDITION).

PIPE TRENCH - STORM DRAIN — NTS — 01

IDENTIFICATION STAMP
DIV. OF THE STATE ARCHITECT
APP: 02-123848 INC: 01
REVIEWED FOR
SS ☑ FLS ☑ ACS ☑
DATE: 05/21/2026

LPA
ARCHITECTURE ENGINEERING INTERIOR DESIGN LANDSCAPE ARCHITECTURE PLANNING
949-261-1001 Office
LPADesignStudios.com
5301 California Avenue, Suite 100
Irvine, California 92617

REGISTERED PROFESSIONAL ENGINEER KATHLEEN M. SPINDT R.C.E. 68369 EXP. 9–30–27 STATE OF CALIFORNIA

This document and all other project documents, ideas, aesthetics and designs incorporated therein are instruments of service. All project documents are copyright protected, are the property of LPA, Inc. (LPA) and cannot be lawfully used in whole or in part for any project or purpose except as set forth in the contractual agreement between LPA and its Client. The unauthorized disclosure and/or use of the project documents (including the creation of derivative works), may give rise to liability for copyright infringement, unlawful disclosure, use or misappropriation of property rights held by LPA. The unauthorized use of the project documents will give rise to the recovery of monetary losses and damages including attorney fees and costs for which the unauthorized user will be held liable.
Project documents describe the design intent of the work and are not a representation of as-built or existing conditions. LPA is not responsible for any discrepancies between the project documents and the existing conditions.

© LPA, Inc.

ELKHORN ELEMENTARY SCHOOL
CAMPUS MODERNIZATION INCREMENT 1

10505 DAVIS ROAD, STOCKTON, CA 95209

Developed for
LODI UNIFIED SCHOOL DISTRICT

Revision	Date

Submittal	Date
75% SCHEMATIC DESIGN	08/21/2025
DSA SUBMITTAL	12/18/2025

Job Number	31942
Checked By	CD
Scale	NTS

DETAILS

1C7.02

ABBREVIATIONS

&	AND
∠	ANGLE
@	AT
℄	CENTERLINE
ϕ	DIAMETER OR ROUND
#	POUND OR NUMBER
ADJ.	ADJACENT
AGGR.	AGGREGATE
AL.	ALUMINUM
APPROX.	APPROXIMATE
ARCH.	ARCHITECTURAL
AC.	ASPHALT
ACC.	ACCESSIBLE
B.C.R.	BEGINNING OF CURVE RADIUS
B.O.C.	BACK OF CURB
B.O.W.	BOTTOM OF WALL
B.O.S.	BOTTOM OF SLOPE
BLDG.	BUILDING
BLK.	BLOCK
C.E.	CIVIL ENGINEER
C.I.P.	CAST IN PLACE
CLKG.	CAULKING
CMU.	CONCRETE MASONRY UNIT
CONC.	CONCRETE
CONSTR.	CONSTRUCTION
CONT.	CONTINUOUS
CTR.	CENTER
D.A.	DISABLED ACCESS
DET.	DETAIL
DIA.	DIAMETER
DIM.	DIMENSION
DN.	DOWN
DWGS.	DRAWINGS
E.J.	EXPANSION JOINT
EL.	ELEVATION
ELEC.	ELECTRICAL
EQ.	EQUAL
EXP.	EXPANSION
EXT.	EXTERIOR
F.G.	FINISH GRADE
F.S.	FINISH SURFACE
F.O.B.	FACE OF BUILDING
F.O.C.	FACE OF CURB
F.O.W.	FACE OF WALL
GA.	GAUGE
GALV.	GALVANIZED
GND.	GROUND
GR.	GRADE
HDR	HEADER
HT.	HEIGHT
LT.	LIGHT
MAX.	MAXIMUM
MET.	METAL
MFR.	MANUFACTURER
MIN.	MINIMUM
MTD.	MOUNTED
MTL.	MATERIAL
N.I.C.	NOT IN CONTRACT
N.T.S.	NOT TO SCALE
O.C.	ON CENTER
O.D.	OUTSIDE DIAMETER (DIM.)
PA.	PLANTING AREA
PED.	PEDESTRIAN
PRCST.	PRECAST
P.I.P.	POURED IN PLACE
P.O.T.	POINT OF TANGENCY
P.T.S.	POST TENSION SLAB
QTY	QUANTITY
R.	RISER
RAD.	RADIUS
REINF.	REINFORCED
REQ.	REQUIRED
SCHED.	SCHEDULE
SHT.	SHEET
SPEC.	SPECIFICATION
S.S.	STAINLESS STEEL
STD.	STANDARD
STRL.	STRUCTURAL
T.	TREAD
T.C.	TOP OF CURB
T.O.S.	TOP OF SLOPE
T.O.W.	TOP OF WALL
TYP.	TYPICAL
TBD.	TO BE DETERMINED
VEH.	VEHICULAR
VERT.	VERTICAL
W/	WITH
W/O	WITHOUT

PLANTING NOTES

1. REFER TO CIVIL ENGINEER'S DRAWINGS FOR UTILITY LOCATIONS, TREE SUBDRAINAGE STUBOUTS, (IF REQUIRED), AND FINAL GRADING. IF ACTUAL SITE CONDITIONS VARY FROM WHAT IS SHOWN ON THE LANDSCAPE ARCHITECT'S DRAWINGS, THE CONTRACTOR SHALL CONTACT THE OWNER'S AUTHORIZED REPRESENTATIVE AND LANDSCAPE ARCHITECT FOR DIRECTION AS TO HOW TO PROCEED.
2. VERIFY LOCATIONS OF ALL PERTINENT EXISTING AND PROPOSED SITE IMPROVEMENTS. IF ANY PART OF THIS PLAN CANNOT BE FOLLOWED DUE TO SITE CONDITIONS, CONTACT THE LANDSCAPE ARCHITECT FOR INSTRUCTION PRIOR TO COMMENCING WORK.
3. EXACT LOCATIONS OF PLANT MATERIALS SHALL BE REVIEWED BY THE LANDSCAPE ARCHITECT IN THE FIELD PRIOR TO INSTALLATION. LANDSCAPE ARCHITECT RESERVES THE RIGHT TO ADJUST PLANTS TO EXACT LOCATION IN FIELD.
4. CONTRACTOR SHALL BE RESPONSIBLE FOR VERIFYING ALL PLANT COUNTS AND SQUARE FOOTAGES. QUANTITIES SHOWN ON PLANS TAKE PRECEDENCE OVER WRITTEN QUANTITIES IN "PLANTING LEGEND."
5. PROVIDE MATCHING FORMS AND SIZES FOR ALL PLANT MATERIALS WITHIN EACH SPECIES AND SIZE DESIGNATED ON THE DRAWINGS.
6. PRUNE NEWLY PLANTED TREES ONLY AS DIRECTED BY LANDSCAPE ARCHITECT.
7. ALIGNED AND EQUALLY SPACED, IN ALL DIRECTIONS, ALL SHRUBS TO BE AS DESIGNATED PER THESE NOTES AND DRAWINGS.
8. ALL TREES IN ROWS TO BE ALIGNED. (UNLESS NOTED OTHERWISE ON PLANS)
9. TREES SHALL BEAR SAME RELATION TO FINISH GRADE AS AT PLACE OF GROWTH.
10. FINISH GRADES OF ALL TURF AREAS SHALL BE (1") BELOW ADJACENT CURB OR PAVEMENT. FINISH GRADES OF ALL SHRUB AREAS SHALL BE (2-1/2") BELOW ADJACENT CURB, PAVEMENT OR HEADER.
11. CONTRACTOR SHALL SUBMIT FOR APPROVAL COLOR PHOTOS OF ALL TREES, SHRUBS, AND GROUNDCOVER. PHOTOS SHOULD INCLUDE A PERSON FOR SCALE PURPOSES, PHOTOS SHALL BE OF THE ACTUAL PLANT MATERIAL TO BE USED ON THE PROJECT. ALL PLANT MATERIAL SHALL BE OF A QUALITY AS DETERMINED BY THE LANDSCAPE ARCHITECT. MATERIAL FOUND UNSUITABLE FOR THE DESIGN OR SPECIFICATION INTENT WILL BE REJECTED.
12. PROVIDE A (3") LAYER OF MULCH AT PROPOSED TREE, SHRUB, AND GROUNDCOVER PLANTING AREAS, EXCEPT AREAS WITH JUTE MESHING.
13. CONTRACTOR SHALL CONDUCT AGRICULTURAL SUITABILITY AND FERTILITY SOILS TESTING PER SOIL PREPARATION SPECIFICATION. ANALYSIS SHALL INCLUDE RECOMMENDATIONS FOR SOIL PREPARATION AND BACKFILL MIX AS WELL AS RECOMMENDATIONS FOR POST MAINTENANCE FERTILIZATION. SUBMIT SOILS ANALYSES AND SAMPLES OF AMENDMENTS TO LANDSCAPE ARCHITECT FOR REVIEW PRIOR TO SOIL PREPARATION.
14. QUANTITIES LISTED ON PLANT LEGEND ARE PER SHEET. CONTRACTOR MUST VERIFY QUANTITIES GIVEN ON THE PLANS WITH ACTUAL QUANTITIES SHOWN.
15. PROVIDE ROOT BARRIERS IN ADDITION TO THOSE INDICATED ON THE PLANS FOR ALL TREES WITHIN 5' OF ANY HARDSCAPE.
16. DO NOT INSTALL WATERING BASINS AROUND TREES WHEN PLANTED IN TURF. PROVIDE A CIRCULAR TURF-FREE ZONE TO OUTSIDE EDGE OF ROOTBALL. PLACE ONLY 2-INCHES OF WOOD MULCH IN THIS AREA AND NO CLOSER THAN 4-INCHES FROM TRUNK.
17. PLANT ALL TREES A MIN. OF 5' FROM ANY UTILITIES. THE LANDSCAPE CONTRACTOR SHALL VERIFY THE LOCATION OF ALL UTILITIES PRIOR TO COMMENCING WORK.
18. TREES ARE TO BE A MINIMUM OF 5' AWAY FROM ANY HARDSCAPE SUCH AS CURBS, WALKS, ETC.
19. LANDSCAPE MAINTENANCE PERIOD IS 90 DAYS.
20. REFER TO SPECIFICATIONS FOR ADDITIONAL INFORMATION.

TREE REMOVAL AND PROTECTION NOTES

1. CONTRACTOR SHALL RETAIN THE SERVICES OF AN INDEPENDENT REGISTERED CONSULTING ARBORIST.
2. THE ARBORIST SHALL PROVIDE CONTRACTOR WITH RECOMMENDATIONS AND SPECIFICATIONS AS TO THE REMOVAL OF THE EXISTING TREE.
3. ARBORIST SHALL BE ON-SITE TO OBSERVE THE REMOVAL OF TREE.
4. THE ARBORIST SHALL BE CERTIFIED WITH THE AMERICAN SOCIETY OF CONSULTING ARBORISTS OR INTERNATION SOCIETY OF ARBORICULTURE.
5. CONTRACTOR SHALL FOLLOW ALL ARBORIST RECOMMENDATIONS AND SPECIFICATIONS, UNLESS OTHERWISE DIRECTED BY CLIENT/ARCHITECT.

LANDSCAPE GRADING AND DRAINAGE NOTES

1. REFER TO CIVIL ENGINEER'S GRADING PLANS FOR SITE GRADING, DRAINAGE, AND UTILITY LOCATIONS. IF ACTUAL SITE CONDITIONS VARY FROM WHAT IS SHOWN ON THE LANDSCAPE ARCHITECT'S DRAWINGS, THE CONTRACTOR SHALL CONTACT THE OWNER'S AUTHORIZED REPRESENTATIVE AND LANDSCAPE ARCHITECT FOR DIRECTION AS TO HOW TO PROCEED.
2. REFER TO CIVIL ENGINEER'S DRAWINGS FOR SUBDRAINAGE POINT OF IN CONNECTION TO STORM DRAIN.
3. THE CONTRACTOR SHALL REQUEST OBSERVATION AS REQUIRED 48 HOURS ADVANCE OF PERFORMING WORK.
4. THE CONTRACTOR SHALL NOTIFY UNDERGROUND SERVICE ALERT (USA 800/227-2600) OR DIG ALERT (800-422-4133) 48 HOURS PRIOR TO ANY EXCAVATION.
5. ALL GRADING OPERATIONS SHALL CONFORM TO LOCAL GUIDELINES.
6. FIELD VERIFY EXISTING UNDERGROUND UTILITIES. THE CONTRACTOR SHALL BE RESPONSIBLE FOR VERIFYING THE ACTUAL LOCATION AND ELEVATION IN THE FIELD PRIOR TO BEGINNING CONSTRUCTION. THE CONTRACTOR SHALL PROTECT ALL EXISTING UTILITIES AND SHALL BE RESPONSIBLE FOR ANY DAMAGE TO EXISTING UTILITIES ENCOUNTERED DURING CONSTRUCTION.
7. NO CHANGE IN CONTRACT PRICE WILL BE ALLOWED FOR ACTUAL OR CLAIMED DISCREPANCY BETWEEN EXISTING GRADE AND THOSE SHOWN ON PLANS AFTER CONTRACTOR HAS ACCEPTED EXISTING GRADES AND MOVED ONTO THE SITE.
8. ALL PROPOSED GRADES ARE TO MEET AND BLEND IN WITH EXISTING GRADING AT PROJECT LIMIT AND EXISTING SIDEWALK. PRECISE ELEVATIONS INDICATED ON PLANS TO BE VERIFIED IN FIELD TO AS-BUILT CONDITION.
9. THE DEBRIS CREATED BY LANDSCAPE GRADING OPERATIONS SHALL BECOME THE PROPERTY OF THE CONTRACTOR AND SHALL BE LEGALLY DISPOSED OF OFF-SITE.
10. FINAL LANDSCAPE GRADING SHALL BE REVIEWED BY THE LANDSCAPE ARCHITECT IN THE FIELD PRIOR TO INSTALLATION OF PLANTING.

LAYOUT AND MATERIALS NOTES

1. THE CONTRACTOR SHALL LAYOUT AND FIELD VERIFY ALL DIMENSIONS OF DRIVEWAY, PLANTERS, WALKS, SLOPES AND RELATED WORK PRIOR TO CONSTRUCTION. ANY DISCREPANCIES SHALL BE BROUGHT TO THE ATTENTION OF THE OWNER'S AUTHORIZED REPRESENTATIVE.
2. VERIFY LOCATIONS OF ALL PERTINENT EXISTING AND PROPOSED SITE IMPROVEMENTS. IF ANY PART OF THIS PLAN CANNOT BE FOLLOWED DUE TO SITE CONDITIONS, CONTACT THE LANDSCAPE ARCHITECT FOR INSTRUCTION PRIOR TO COMMENCING WORK.
3. WRITTEN DIMENSIONS SHALL TAKE PRECEDENCE OVER SCALE.
4. THIS DRAWING INCLUDES THE LOCATION OF AREA DRAINS FOR REFERENCE. REFER TO RELATED CIVIL ENGINEER'S DRAWINGS FOR CONSTRUCTION DETAILS AND UTILITY CONNECTIONS.
5. REFER TO ELECTRICAL ENGINEER'S DRAWINGS FOR LIGHT FIXTURE SCHEDULE AND CIRCUITRY AS NECESSARY.
6. REFER TO SOIL ENGINEER'S GEOTECHNICAL REPORT FOR SUB-BASE MATERIALS AND COMPACTION.
7. WHERE DIMENSIONS ARE CALLED AS "EQUAL", ALL REFERENCED ITEMS SHALL BE SPACED EQUALLY, MEASURED TO THEIR CENTERLINES.
8. ALL MEASUREMENTS ARE TO FACE OF WALL, CURB OR OTHER FIXED SITE IMPROVEMENT, UNLESS OTHERWISE NOTED. DIMENSIONS TO CENTERLINES AS INDICATED.
9. INSTALL ALL INTERSECTING ELEMENTS AT 90 DEGREES TO EACH OTHER UNLESS OTHERWISE NOTED.
10. ALL DRAINS/ BASINS SHOULD HAVE BLACK ATRIUM TYPE GRATES WITHIN SHRUBS/GROUNDCOVER AREAS AND BLACK FLAT TYPE GRATES IN TURF AREAS.

FENCE AND GATE NOTES

1. SUBMIT SHOP DRAWINGS TO LANDSCAPE ARCHITECT OF ALL FENCE AND GATE COMPONENTS INCLUDING PLANS, ELEVATIONS AND DETAILS AS NECESSARY FOR COMPLETE INSTALLATION.
2. ALL WELDS PER DETAILS. COLD GALVANIZE ALL FIELD WELDS.
3. ALL POSTS SHALL HAVE WELDED METAL CAPS.
4. ALL MEMBERS TO BE12 GA WALL THICKNESS MINIMUM, UNLESS NOTED OTHERWISE
5. ALL GATES AND FENCES, SEE MATERIALS PLAN FOR COLOR.
6. FIELD VERIFY LOCATIONS OF EXISTING FENCES, POSTS, AND GATES.IF ACTUAL SITE CONDITIONS VARY FROM WHAT IS SHOWN ON THE LANDSCAPE ARCHITECT'S PLANS, THE CONTRACTOR SHALL CONTACT THE OWNER'S REPRESENTATIVE AND LANDSCAPE ARCHITECT FOR DIRECTION AS TO HOW TO PROCEED.
7. SUBMIT SAMPLES OF ALL COMPONENTS AND MATERIALS TO LANDSCAPE ARCHITECT FOR REVIEW PRIOR TO FABRICATION.
8. GATE HARDWARE FINISH AND COLOR TO MATCH GATE/FENCE.
9. ANY COMPONENTS REQUIRED FOR A COMPLETE FENCE/GATE SYSTEM, BUT NOT SHOWN, SHOULD BE CONSIDERED A PART OF THESE DRAWINGS AND INCLUDED IN THE FINAL INSTALLED SYSTEM.
10. CONTRACTOR TO VERIFY ALL ATTACHMENTS AND DIMENSIONS, INSTALL PER MANUFACTURER'S RECOMMENDATIONS.
11. ALL JOINTS TO BE WELDED TO MAKE A SOLID GATE FRAME.

GENERAL NOTES

1. BASE INFORMATION INCLUDING THE LOCATION OF PROPERTY LINES, EASEMENTS, BUILDINGS, ROADS AND CURBS HAVE BEEN TAKEN FROM THE CIVIL ENGINEER'S DRAWINGS. REFER TO CIVIL ENGINEER'S DRAWINGS FOR ADDITIONAL INFORMATION.
2. REFER TO THE CIVIL ENGINEER'S DRAWINGS FOR PROPOSED UTILITY INFORMATION INCLUDING STORM DRAIN, SEWER, WATER, ELECTRICAL, GAS, TELEPHONE AND CABLE TV.
3. REFER TO CITY AND/OR COUNTY STANDARD PLANS AND SPECIFICATIONS WHERE APPLICABLE.
4. VERIFY SITE INFORMATION, INCLUDING PROPERTY LINES, EXISTING ABOVE GROUND AND BELOW GROUND UTILITIES AND STRUCTURES, AND OTHER INFORMATION AFFECTING THE SCOPE OF WORK INCLUDED ON THESE DRAWINGS. IF ACTUAL SITE CONDITIONS VARY FROM WHAT IS SHOWN ON THE LANDSCAPE ARCHITECT'S DRAWINGS, THE CONTRACTOR SHALL CONTACT THE OWNER'S AUTHORIZED REPRESENTATIVE AND THE LANDSCAPE ARCHITECT FOR DIRECTION ON HOW TO PROCEED.
5. EXCAVATION IN THE VICINITY OF UTILITIES AND EXISTING MATERIALS SHALL BE UNDERTAKEN WITH CARE. THE CONTRACTOR BEARS FULL RESPONSIBILITY FOR THIS WORK. ANY DAMAGE CAUSED BY ANY PERSON, VEHICLE, EQUIPMENT, OR TOOL RELATED TO THE EXECUTION OF THE CONTRACT SHALL BE REPAIRED IMMEDIATELY AT NO EXPENSE TO THE OWNER.
6. CONTRACTOR SHALL BE RESPONSIBLE FOR ANY COORDINATION REQUIRED TO ACCOMPLISH ALL CONSTRUCTION OPERATIONS. ALL PIPING, CONDUIT, SLEEVES, ETC., SHALL BE SET IN PLACE PRIOR TO INSTALLATION OF CONSTRUCTION ITEMS.
7. CONTRACTOR SHALL BE RESPONSIBLE TO CONSULT WITH SITE SUPERINTENDENT, APPROPRIATE AGENCIES AND PLANS, FOR THE LOCATIONS OF ALL UNDER-GROUND UTILITIES, PIPES AND STRUCTURES. CONTRACTOR SHALL TAKE SOLE RESPONSIBILITY FOR ANY COST INCURRED DUE TO DAMAGE OF SAID UTILITIES.
8. CONTRACTOR SHALL NOT WILLFULLY PROCEED WITH CONSTRUCTION AS DESIGNED WHEN IT IS OBVIOUS THAT UNKNOWN OBSTRUCTIONS, AREA DISCREPANCIES AND/OR GRADE DIFFERENCES EXIST THAT MAY NOT HAVE BEEN KNOWN DURING DESIGN. SUCH CONDITIONS SHALL BE IMMEDIATELY BROUGHT TO THE ATTENTION OF THE OWNER'S AUTHORIZED REPRESENTATIVE. THE CONTRACTOR SHALL ASSUME FULL RESPONSIBILITY FOR ALL NECESSARY REVISIONS DUE TO FAILURE TO GIVE SUCH NOTIFICATIONS.
9. CONTRACTOR IS RESPONSIBLE FOR REPLACEMENT OF ANY EXISTING MATERIALS THAT ARE DAMAGED DURING CONSTRUCTION.
10. PRIOR TO INSTALLATION OF ANY CONSTRUCTION ITEM, FORMS WITH STEEL IN PLACE AND COMPACTED SUBGRADE COMPLETE, SHALL BE OBSERVED AND REVIEWED BY THE LANDSCAPE ARCHITECT.
11. ALL WALLS AND WALKS SHOULD HAVE SMOOTH, CONTINUOUS CURVES AS INDICATED ON PLANS.
12. ALL PROPERTY LINES, LOT LINES, AND TOP OF SLOPE LINES SHALL BE VERIFIED PRIOR TO COMMENCING WORK.
13. ALL ELECTRICAL JUNCTION BOXES FOR LIGHTS SHALL BE IN PLANTING AREAS AND LOCATION REVIEWED BY THE LANDSCAPE ARCHITECT. STAKE LOCATION PRIOR TO INSTALLATION.
14. SEE CIVIL ENGINEER'S DRAWINGS FOR CURBS AND A/C PAVING.
15. REFER TO CIVIL ENGINEER'S DRAWINGS FOR ELEVATIONS AND LOCATION OF DRAINAGE STRUCTURES PRIOR TO INSTALLATION OF WALKS, FOOTINGS AND OTHER STRUCTURES.
16. REFER TO GEOTECHNICAL REPORT FOR ADDITIONAL INFORMATION. IF NOTES ON THE PLANS DIFFER FROM THE GEOTECHNICAL REPORT, PROVIDE THE MOST STRINGENT REQUIREMENT.
17. RAISE ALL VAULTS/UTILITIES BOXES TO GRADE WITHIN LIMITS OF WORK. FIELD VERIFY PRIOR TO BID.

SITE FURNISHINGS LEGEND

SYM.	DESCRIPTION	MFR.	MODEL #	COLOR	FIN/ PTRN	QTY.	DET
	TRASH RECEPTACLES	QCP	24" CALIFORNIA ROUND QR-CAL2436W-A19 QR-CAL2436W-M19	NATURAL	ACID ETCH	T:3 R:3	-
	BIKE RACK	RIBBON RACK	7-CAPACITY IN-GROUND RACK	STEEL PIPE	GALV.	1	04/ 1L5.04
	BIKE LOCKER	DERO	BIKE DOUBLE LOCKER	LIGHT GRAY RAL 7042	POWDER-COAT	1	PER MFR.
	16' WORKTABLE	QCP HB2	STANDARD PICNIC TABLE CUSTOM LENGTH	FRENCH GRAY	CRAFTS MAN ETCH	1	01/ 1L5.05
	HEXAGONAL PEDESTAL	QCP	CUSTOMIZED HEXAGON 36" DIA X 28"H (A) 36" DIA X 14"H (B)	FRENCH GRAY	CRAFTS MAN ETCH	A: 2 B: 4	13/ 1L5.02

PLAY EQUIPMENT LEGEND

SYM.	DESCRIPTION	MFR.	MODEL #	COLOR	FIN/ PTRN	QTY.	DET
	VOLLEYBALL SLEEVES, POSTS & NET	PORTER ATHLETIC	POST: 00444-000 GROUND SLEEVE: 4X4 NET: OUTDOOR 2256	STANDARD	GALVANIZED POST	2 PAIRS	03/ 1L5.04
	BASKETBALL GOAL	PORTER ATHLETIC	POST: NO. 00176, 6' EXTENSION BACKBOARD: 00287-698 GOAL + NET: 00202H00 UPRIGNT PADDING 00069-000	STANDARD	GALVANIZED POST	2 PAIRS	09/ 1L5.04
	TETHERBALL POST	PORTER ATHLETIC	POSTS: 00763-00 GROUND SLEEVE: 00402-000 BALL: 00763-100	STANDARD	GALVANIZED POST	3	14/ 1L5.04

MATERIALS KEYNOTE LEGEND

NOTE	DESCRIPTION	DET/ SHT	COLOR / FINISH
01	CONCRETE PAVING - TYPE 1	01/ 1L5.01	COLOR: NATURAL GRAY FINISH: MEDIUM BROOM
02	CONCRETE PAD AT LIGHT POST	14/ 1L5.01	COLOR: NATURAL GRAY FINISH: MEDIUM BROOM
03	CONCRETE PAVING - TYPE 3 - VEHICULAR	01/ 1L5.01	COLOR: NATURAL GRAY FINISH: MEDIUM BROOM
04	CONCRETE FLUSH CURB	10,11/ 1L5.01	COLOR: NATURAL GRAY FINISH: MEDIUM BROOM
05	DETECTABLE WARNING PAVERS	09/ 1L5.01	COLOR: FEDERAL YELLOW BY ACCESS TILE
06	BOULDER	12/ 1L5.01	WATER-WASHED GRAY FROM MID-VALLEY ROCK
07	GROUTED COBBLE	16/ 1L5.01	4 X 8 NOYA FROM CALIFORNIA ROCK AND READYMIX
08	CONCRETE RETAINING WALL	18/ 1L5.01	COLOR: NATURAL GRAY AS-CAST SIDES, SMOOTH TOP
09	CONCRETE FREESTANDING WALL	17/ 1L5.01	COLOR: NATURAL GRAY/ TROWEL FINISH
10	HANDRAIL AT RAMP	01/ 1L5.03	GALVANIZED W/ URETHANE PAINT SYSTEM/ COLOR; TBD
11	TUBE STEEL FENCE	01,02/ 1L5.02	COLOR: BLACK/ FINISH: POWDERCOAT
12	TUBE STEEL SINGLE ACCESSIBLE GATE	04/ 1L5.02	COLOR: BLACK/ FINISH: POWDERCOAT
13	TUBE STEEL DOUBLE ACCESSIBLE GATE	03/ 1L5.02	COLOR: BLACK/ FINISH: POWDERCOAT
14	CHAINLINK FENCE	14/ 1L5.03	GALVANIZED -
15	CHAINLINK DOUBLE SWING VEHICULAR GATE	15/ 1L5.03	GALVANIZED -
16	CHAINLINK SINGLE SWING SERVICE GATE	16/ 1L5.03	GALVANIZED -
17	SITE FURNISHINGS	-	REFER TO SITE FURNISHINGS LEGEND IN 1L0.01
18	SITE LIGHTING	- -	REFER TO SITE LIGHTING LEGEND IN 1L0.01
19	LUNCH SHELTER (PC 04-122188)	1PC1.00- 1PC5.00	STEEL ROOF: ROMAN BLUE FRAME & POST: BASALT GREY
20	PRIVACY SLATS AT CHAIN LINK FENCE	- -	MATCH EXISTING -
21	FOUR SQUARE	01/ 1L5.04	PAINTED WITH MULTIPLE STREETBOND COLORS;SEE 1L3.01
22	BASKETBALL COURT	11/ 1L5.04	PAINTED WITH MULTIPLE STREETBOND COLORS;SEE 1L3.01
23	VOLLEYBALL COURT	02/ 1L5.04	PAINTED WITH MULTIPLE STREETBOND COLORS;SEE 1L3.01
24	TETHERBALL COURT	10/ 1L5.04	PAINTED WITH MULTIPLE STREETBOND COLORS;SEE 1L3.01
25	COLORED PAVEMENT MARKINGS	- -	STREETBOND PAINT SYSTEM, SEE PLAN FOR COLOR
26	STEM FORMULAS MARKER	- -	COLOR: SR WHITE THERMOPLASTIC PAINT SYSTEM
27	ROCK MULCH	- -	3/4" CRUSHED GRAVEL FROM CALIFORNIA ROCK AND READY
28	CHAINLINK DOUBLE SWING ACCESSIBLE GATE	04/ 1L5.03	GALVANIZED -
29	CONCRETE FLUSH CURB AT FENCE POST	13/ 1L5.01	COLOR: NATURAL GRAY FINISH: MEDIUM BROOM
30	CONCRETE VERTICAL CURB AT FENCE POST	14/ 1L5.01	COLOR: NATURAL GRAY FINISH: MEDIUM BROOM
31	OPENING AT CONCRETE VERTICAL CURB	15/ 1L5.01	COLOR: NATURAL GRAY FINISH: MEDIUM BROOM
32	CHAINLINK DOUBLE SWING SERVICE GATE	15/ 1L5.02	GALVANIZED -
33	REDWOOD HEADER	12/ 1L5.01	- -

REFERENCE KEYNOTE LEGEND

NOTE	DESCRIPTION	DET/ SHT	COMMENTS
A	EXISTING PAVING		PROTECT IN PLACE
B	EXISTING CURB		PROTECT IN PLACE
C	EXISTING GUTTER		PROTECT IN PLACE
D	EXISTING GATE		PROTECT IN PLACE
E	EXISTING FENCE		PROTECT IN PLACE
F	EXISTING UTILITY		PROTECT IN PLACE
G	EXISTING TREE		PROTECT IN PLACE
H	A.C. PAVING	PER CIVIL	
J	CURB	PER CIVIL	
K	CURB RAMP	PER CIVIL	
L	PAVEMENT STRIPING	PER CIVIL	
M	WHEEL STOP	PER CIVIL	
N	ADA SIGNAGE	PER CIVIL	
P	BIORETENTION BASIN	PER CIVIL	
Q	EXISTING BUILDING CANOPY		PROTECT IN PLACE
R	BUILDING COLUMN	PER ARCH	
S	TRENCH DRAIN WITH CONCRETE BAND	PER CIVIL	
T	ELECTRICAL VAULT	PER ELEC	
U	MECHANICAL UNIT	PER MECH	
V	TRANSFORMER	PER -	
W	EXISTING MAILBOX		PROTECT IN PLACE
X	CONCRETE BAND FOR TRENCH DRAIN	PER CIVIL	
Z	UTILITY PAD	PER CIVIL	COLOR: NATURAL GRAY FINISH: MEDIUM BROOM

SITE LIGHTING LEGEND

SYM.	DESCRIPTION	DET/ SHT	COMMENTS
	EVENT POLE AT FLUSH BASE	01/ 1E7.10	LIGHT POLE BASE PER 20/1L5.01

NOTE: SEE ELECTRICAL PLANS FOR FIXTURES, LAMPS, AND SPECS.

GATE SCHEDULE

LOCATION	GATE #	TYPE	HARDWARE SET	PANIC HARDWARE	DETAIL	TOTAL WIDTH	HEIGHT	KNOX BOX
(E) BLDG F SW CORNER	G-001	PEDESTRIAN GATE	HYDRAULIC SELF CLOSING HINGES, LEVER, ANTI VANDAL PULL HANDLE, KICK PLATES, HOLDER		04/1L5.02	4'-0"	6'-0"	
(E) BLDG F SE CORNER	G-002	PEDESTRIAN GATE	HYDRAULIC SELF CLOSING HINGES, LEVER, ANTI VANDAL PULL HANDLE, KICK PLATES, HOLDER		04/1L5.02	4'-0"	6'-0"	
(E) BLDG F EAST	G-003	PEDESTRIAN GATE	HYDRAULIC SELF CLOSING HINGES, LEVER, ANTI VANDAL PULL HANDLE, KICK PLATES, HOLDER		03/1L5.02	8'-0"	6'-0"	
NORTH PARKING LOT ENTRY	G-004	VEHICULAR GATE	SEALED BEARING HINGES, (1) DROP ROD, PAD-LOCKABLE GATE LATCH		15/1L5.03	20'-0"	6'-0"	X
UTILITY YARD	G-005	SERVICE GATE	HYDRAULIC SELF CLOSING HINGES, PANIC BAR, ANTI VANDAL PULL HANDLE, PANIC PLATE, KICK PLATES, HOLDER	X	15/1L5.02	8'-0"	8'-0"	
ENTRY ON DAVIS RD	G-006	PEDESTRIAN GATE	HYDRAULIC SELF CLOSING HINGES, LEVER, ANTI VANDAL PULL HANDLE, KICK PLATES, HOLDER		04/1L5.03	8'-0"	6'-0"	
FIELD ENTRY	G-007	SERVICE GATE	SEALED BEARING HINGES , LATCH		16/1L5.03	4'-0"	6'-0"	

SHEET INDEX

1L0.01 LANDSCAPE NOTES AND LEGENDS

1L1.01 MATERIALS PLAN

1L2.01 LAYOUT PLAN

1L3.01 ENLARGEMENT PLAN

1L4.01 SITE SECTIONS AND ELEVATIONS

1L5.01 CONSTRUCTION DETAILS
1L5.02 CONSTRUCTION DETAILS
1L5.03 CONSTRUCTION DETAILS
1L5.04 CONSTRUCTION DETAILS
1L5.05 CONSTRUCTION DETAILS

1L6.01 IRRIGATION PLAN
1L6.02 IRRIGATION NOTES AND LEGEND
1L6.03 IRRIGATION DETAILS
1L6.04 IRRIGATION DETAILS
1L6.05 IRRIGATION DETAILS

1L7.01 PLANTING PLAN
1L7.02 PLANTING DETAILS

GENERAL SCOPE OF WORK

1. SITEWORK INCLUDING CONCRETE HARDSCAPE
2. CONCRETE WALLS, RAMPS, AND RETAINING CURBS
3. TUBULAR STEEL FENCING AND ASSOCIATED GATES
4. LIGHT POLES
5. PLANTING AND IRRIGATION

MWELO REQUIREMENTS

A.	WATER EFFICIENT LANDSCAPE WORKSHEET, HYDROZONE INFORMATION TABLE, WATER BUDGET CALCULATIONS	SHEET 1L6.03
B.	LANDSCAPE DESIGN PLAN	SHEET 1L7.01
C.	IRRIGATION DESIGN PLAN	SHEET 1L6.01

W.E.L.O. COMPLIANCE STATEMENT

I HAVE COMPLIED WITH THE CRITERIA OF THE WATER EFFICIENT LANDSCAPE ORDINANCE AND APPLIED THEM ACCORDINGLY FOR THE EFFICIENT USE OF WATER IN THE PLANTING & IRRIGATION DESIGN PLAN.

NAME — PLA # XXXX — DATE 12.10.2025

LANDSCAPE MAINTENANCE STATEMENT

1. ALL LANDSCAPE IMPROVEMENTS WILL BE MAINTAINED BY PROPERTY OWNER.

SITE SYMBOLS LEGEND

SYM.	DESCRIPTION	SYM.	DESCRIPTION	DET.
	FIRE HYDRANT - PER CIVIL		SAWCUT JOINT	02/ 1L5.01
	AREA DRAIN (PER CIVIL)		EXPANSION JOINT	02/ 1L5.01
CO	CLEAN OUT - PER CIVIL		MATCHLINE	
	TRENCH INLET (PER CIVIL)		PROPERTY LINE/ RIGHT OF WAY	
MH	MAN HOLE - PER CIVIL		DIRECTION OF RAMP; DOWN SLOPE	
PA	PLANTING AREA		EXISTING TREE PROTECT IN PLACE	
	ALIGN			

NOTE: UTILITIES SHOWN ARE FOR REFERENCE ONLY. SEE CIVIL AND ELEC DWGS FOR DETAILS AND EXACT LOCATIONS. FINAL LOCATIONS TO BE REVIEWED BY LANDSCAPE ARCHITECT.

IDENTIFICATION STAMP
DIV. OF THE STATE ARCHITECT
APP: 02-123848 INC: 01
REVIEWED FOR
SS ☑ FLS ☑ ACS ☑
DATE: 05/21/2026

LPA
ARCHITECTURE ENGINEERING INTERIOR DESIGN
LANDSCAPE ARCHITECTURE PLANNING
949-261-1001 Office
LPADesignStudios.com
5301 California Avenue, Suite 100
Irvine, California 92617

LICENSED LANDSCAPE ARCHITECT
IAN CROSHWHITE TOMLINSON
04/02/26
10/31/2026
EXPIRATION DATE
STATE OF CALIFORNIA

This document and all other project documents, ideas, aesthetics and designs incorporated therein are instruments of service. All project documents are copyright protected, are the property of LPA, Inc. (LPA) and cannot be lawfully used in whole or in part for any project or purpose except as set forth in the contractual agreement between LPA and its Client. The unauthorized disclosure and/or use of the project documents (including the creation of derivative works), may give rise to liability for copyright infringement, unlawful disclosure, use or misappropriation of property rights held by LPA. The unauthorized use of the project documents will give rise to the recovery of monetary losses and damages including attorney fees and costs for which the unauthorized user will be held liable.
Project documents describe the design intent of the work and are not a representation of as-built or existing conditions. LPA is not responsible for any discrepancies between the project documents and the existing conditions.

© LPA, Inc.

ELKHORN ELEMENTARY SCHOOL
CAMPUS MODERNIZATION INCREMENT 1

10505 DAVIS ROAD, STOCKTON, CA 95290

Developed for
LODI UNIFIED SCHOOL DISTRICT

Revision	Date

Submittal	Date
100% SCHEMATIC DESIGN	08/28/2025
DSA SUBMITTAL	12/18/2025

Job Number	3194201
Checked By	AW, EW
Scale	AS NOTED

LANDSCAPE NOTES AND LEGENDS

1L0.01

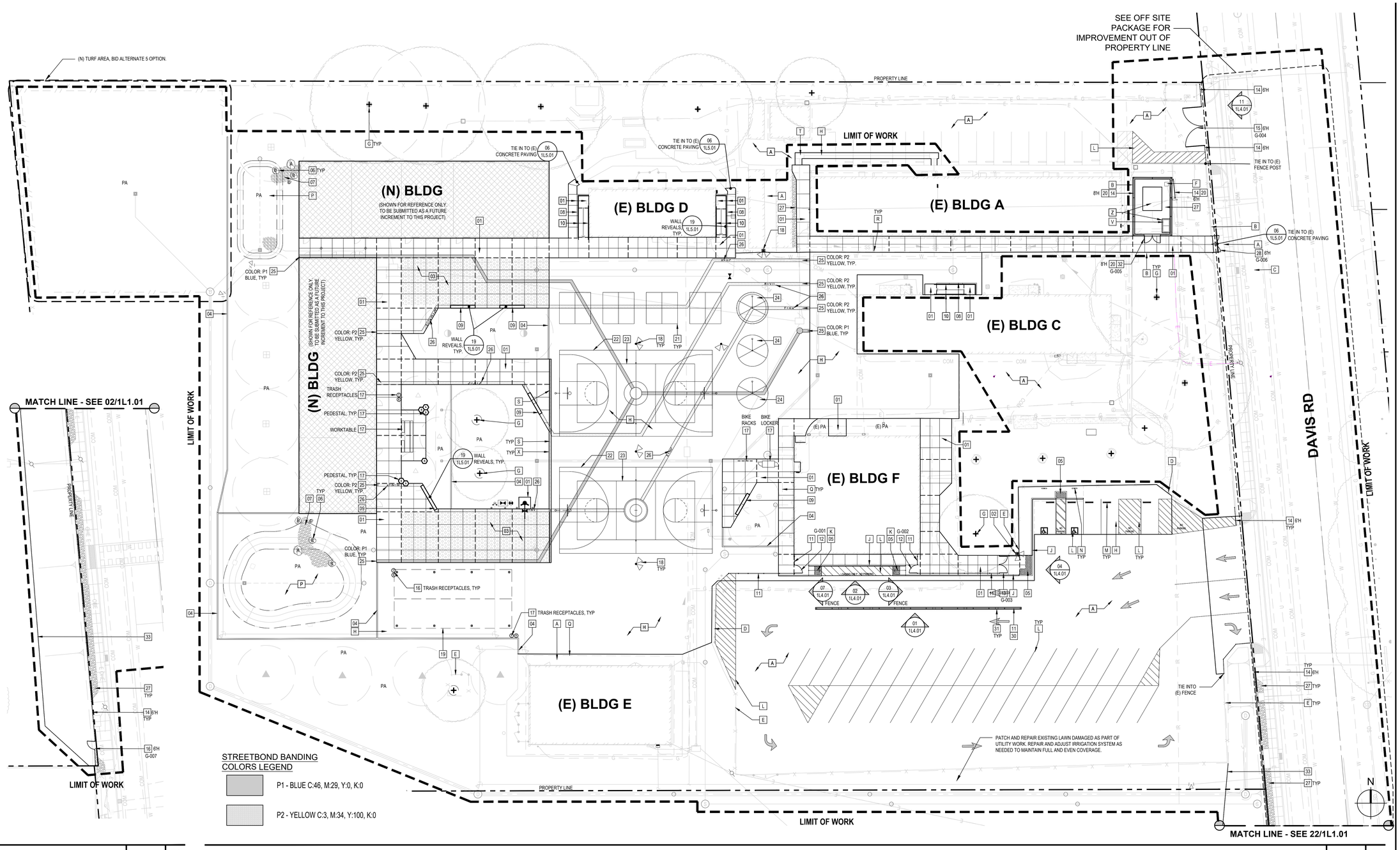

MATERIALS PLAN | 1" = 20'-0" | 22

MATERIALS PLAN | 1" = 20'-0" | 02

SITE SYMBOLS LEGEND

SYM.	DESCRIPTION	SYM.	DESCRIPTION	DET.
	FIRE HYDRANT - PER CIVIL		SAWCUT JOINT	02/ 1L5.01
	AREA DRAIN (PER CIVIL)		EXPANSION JOINT	02/ 1L5.01
CO	CLEAN OUT - PER CIVIL		MATCHLINE	
	TRENCH INLET (PER CIVIL)		PROPERTY LINE/ RIGHT OF WAY	
MH	MAN HOLE - PER CIVIL		DIRECTION OF RAMP; DOWN SLOPE	
PA	PLANTING AREA		EXISTING TREE PROTECT IN PLACE	
	ALIGN			

NOTE: UTILITIES SHOWN ARE FOR REFERENCE ONLY. SEE CIVIL AND ELEC DWGS FOR DETAILS AND EXACT LOCATIONS. FINAL LOCATIONS TO BE REVIEWED BY LANDSCAPE ARCHITECT.

REFERENCE KEYNOTE LEGEND

NOTE	DESCRIPTION	DET/ SHT	COMMENTS
R	BUILDING COLUMN	PER ARCH	
S	TRENCH DRAIN WITH CONCRETE BAND	PER CIVIL	
T	ELECTRICAL VAULT	PER ELEC	
U	MECHANICAL UNIT	PER MECH	
V	TRANSFORMER	PER -	
W	EXISTING MAILBOX		PROTECT IN PLACE
X	CONCRETE BAND FOR TRENCH DRAIN	PER CIVIL	
Z	UTILITY PAD	PER CIVIL	COLOR: NATURAL GRAY FINISH: MEDIUM BROOM

REFERENCE KEYNOTE LEGEND

NOTE	DESCRIPTION	DET/ SHT	COMMENTS
A	EXISTING PAVING		PROTECT IN PLACE
B	EXISTING CURB		PROTECT IN PLACE
C	EXISTING GUTTER		PROTECT IN PLACE
D	EXISTING GATE		PROTECT IN PLACE
E	EXISTING FENCE		PROTECT IN PLACE
F	EXISTING UTILITY		PROTECT IN PLACE
G	EXISTING TREE		PROTECT IN PLACE
H	A.C. PAVING	PER CIVIL	
J	CURB	PER CIVIL	
K	CURB RAMP	PER CIVIL	
L	PAVEMENT STRIPING	PER CIVIL	
M	WHEEL STOP	PER CIVIL	
N	ADA SIGNAGE	PER CIVIL	
P	BIORETENTION BASIN	PER CIVIL	
Q	EXISTING BUILDING CANOPY		PROTECT IN PLACE

MATERIALS KEYNOTE LEGEND

17	SITE FURNISHINGS	-	REFER TO SITE FURNISHINGS LEGEND IN 1L0.01
18	SITE LIGHTING	- -	REFER TO SITE LIGHTING LEGEND IN 1L0.01
19	LUNCH SHELTER (PC 04-122188)	1PC1.00- 1PC5.00	STEEL ROOF: ROMAN BLUE FRAME & POST: BASALT GREY
20	PRIVACY SLATS AT CHAIN LINK FENCE	- -	MATCH EXISTING -
21	FOUR SQUARE	01/ 1L5.04	PAINTED WITH MULTIPLE STREETBOND COLORS;SEE 1L3.01
22	BASKETBALL COURT	11/ 1L5.04	PAINTED WITH MULTIPLE STREETBOND COLORS;SEE 1L3.01
23	VOLLEYBALL COURT	02/ 1L5.04	PAINTED WITH MULTIPLE STREETBOND COLORS;SEE 1L3.01
24	TETHERBALL COURT	10/ 1L5.04	PAINTED WITH MULTIPLE STREETBOND COLORS;SEE 1L3.01
25	COLORED PAVEMENT MARKINGS	- -	STREETBOND PAINT SYSTEM, SEE PLAN FOR COLOR
26	STEM FORMULAS MARKER	- -	COLOR: SR WHITE THERMOPLASTIC PAINT SYSTEM
27	ROCK MULCH	- -	3/4" CRUSHED GRAVEL FROM CALIFORNIA ROCK AND READY
28	CHAINLINK DOUBLE SWING ACCESSIBLE GATE	04/ 1L5.03	GALVANIZED -
29	CONCRETE FLUSH CURB AT FENCE POST	13/ 1L5.01	COLOR: NATURAL GRAY FINISH: MEDIUM BROOM
30	CONCRETE VERTICAL CURB AT FENCE POST	14/ 1L5.01	COLOR: NATURAL GRAY FINISH: MEDIUM BROOM
31	OPENING AT CONCRETE VERTICAL CURB	15/ 1L5.01	COLOR: NATURAL GRAY FINISH: MEDIUM BROOM
32	CHAINLINK DOUBLE SWING SERVICE GATE	15/ 1L5.02	GALVANIZED -
33	REDWOOD HEADER	12/ 1L5.01	- -

MATERIALS KEYNOTE LEGEND

NOTE	DESCRIPTION	DET/ SHT	COLOR / FINISH
01	CONCRETE PAVING - TYPE 1	01/ 1L5.01	COLOR: NATURAL GRAY FINISH: MEDIUM BROOM
02	CONCRETE PAD AT LIGHT POST	14/ 1L5.01	COLOR: NATURAL GRAY FINISH: MEDIUM BROOM
03	CONCRETE PAVING - TYPE 3 - VEHICULAR	01/ 1L5.01	COLOR: NATURAL GRAY FINISH: MEDIUM BROOM
04	CONCRETE FLUSH CURB	10,11/ 1L5.01	COLOR: NATURAL GRAY FINISH: MEDIUM BROOM
05	DETECTABLE WARNING PAVERS	09/ 1L5.01	COLOR: FEDERAL YELLOW BY ACCESS TILE
06	BOULDER	12/ 1L5.01	WATER-WASHED GRAY FROM MID-VALLEY ROCK
07	GROUTED COBBLE	16/ 1L5.01	4 X 8 NOYA FROM CALIFORNIA ROCK AND READYMIX
08	CONCRETE RETAINING WALL	18/ 1L5.01	COLOR: NATURAL GRAY AS-CAST SIDES, SMOOTH TOP
09	CONCRETE FREESTANDING WALL	17/ 1L5.01	COLOR: NATURAL GRAY/ TROWEL FINISH
10	HANDRAIL AT RAMP	01/ 1L5.03	GALVANIZED W/ URETHANE PAINT SYSTEM/ COLOR; TBD
11	TUBE STEEL FENCE	01,02/ 1L5.02	COLOR: BLACK/ FINISH: POWDERCOAT
12	TUBE STEEL SINGLE ACCESSIBLE GATE	04/ 1L5.02	COLOR: BLACK/ FINISH: POWDERCOAT
13	TUBE STEEL DOUBLE ACCESSIBLE GATE	03/ 1L5.02	COLOR: BLACK/ FINISH: POWDERCOAT
14	CHAINLINK FENCE	14/ 1L5.03	GALVANIZED -
15	CHAINLINK DOUBLE SWING VEHICULAR GATE	15/ 1L5.03	GALVANIZED -
16	CHAINLINK SINGLE SWING SERVICE GATE	16/ 1L5.03	GALVANIZED -

IDENTIFICATION STAMP
DIV. OF THE STATE ARCHITECT
APP: 02-123848 INC: 01
REVIEWED FOR
SS ☑ FLS ☑ ACS ☑
DATE: 05/21/2026

LPA
ARCHITECTURE ENGINEERING INTERIOR DESIGN
LANDSCAPE ARCHITECTURE PLANNING
949-261-1001 Office
LPADesignStudios.com
5301 California Avenue, Suite 100
Irvine, California 92617

LICENSED LANDSCAPE ARCHITECT
04/02/26
10/31/2026
RENEWAL DATE
STATE OF CALIFORNIA

This document and all other project documents, ideas, aesthetics and designs incorporated therein are instruments of service. All project documents are copyright protected, are the property of LPA, Inc. (LPA) and cannot be lawfully used in whole or in part for any project or purpose except as set forth in the contractual agreement between LPA and its Client. The unauthorized disclosure and/or use of the project documents (including the creation of derivative works), may give rise to liability for copyright infringement, unlawful disclosure, use or misappropriation of property rights held by LPA. The unauthorized use of the project documents will give rise to the recovery of monetary losses and damages including attorney fees and costs for which the unauthorized user will be held liable.
Project documents describe the design intent of the work and are not a representation of as-built or existing conditions. LPA is not responsible for any discrepancies between the project documents and the existing conditions.

© LPA, Inc.

ELKHORN ELEMENTARY SCHOOL
CAMPUS MODERNIZATION INCREMENT 1

10505 DAVIS ROAD, STOCKTON, CA 95290

Developed for
LODI UNIFIED SCHOOL DISTRICT

Revision	Date

Submittal	Date
100% SCHEMATIC DESIGN	08/29/2025
DSA SUBMITTAL	12/18/2025

Job Number	3194201
Checked By	AW, EW
Scale	AS NOTED

MATERIALS PLAN

1L1.01

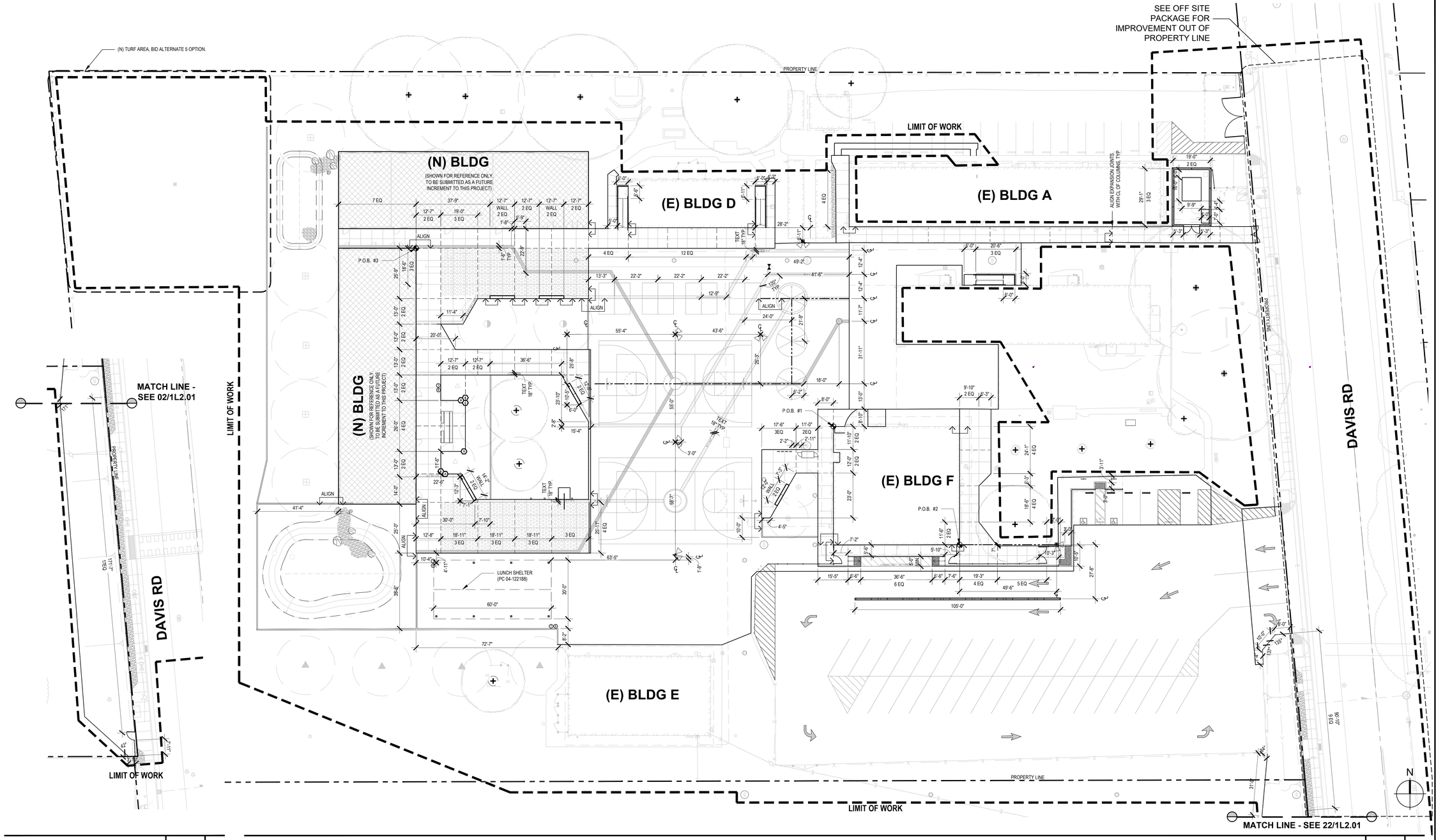

MATERIALS PLAN | 1" = 20'-0" | 22

LAYOUT PLAN | 1" = 20'-0" | 02

ADDITIONAL LAYOUT NOTES

1. SEE SHEET L0.01 FOR LANDSCAPE LAYOUT NOTES.
2. PLAN MEASUREMENTS ARE TO FACE OF WALL, CURB, OR OTHER FIXED SITE IMPROVEMENT, UNLESS NOTED OTHERWISE ON PLANS.

LAYOUT SYMBOL LEGEND

- POINT OF BEGINNING (P.O.B.)
- ALIGN/FLUSH
- CENTER LINE
- BASELINE

IDENTIFICATION STAMP
DIV. OF THE STATE ARCHITECT
APP: 02-123848 INC: 01
REVIEWED FOR
SS ☑ FLS ☑ ACS ☑
DATE: 05/21/2026

LPA
ARCHITECTURE ENGINEERING INTERIOR DESIGN
LANDSCAPE ARCHITECTURE PLANNING
949-261-1001 Office
LPADesignStudios.com
5301 California Avenue, Suite 100
Irvine, California 92617

LICENSED LANDSCAPE ARCHITECT
NO. 5095
04/02/26
10/31/2026
RENEWAL DATE
STATE OF CALIFORNIA

This document and all other project documents, ideas, aesthetics and designs incorporated therein are instruments of service. All project documents are copyright protected, are the property of LPA, Inc. (LPA) and cannot be lawfully used in whole or in part for any project or purpose except as set forth in the contractual agreement between LPA and its Client. The unauthorized disclosure and/or use of the project documents (including the creation of derivative works), may give rise to liability for copyright infringement, unlawful disclosure, use or misappropriation of property rights held by LPA. The unauthorized use of the project documents will give rise to the recovery of monetary losses and damages including attorney fees and costs for which the unauthorized user will be held liable.
Project documents describe the design intent of the work and are not a representation of as-built or existing conditions. LPA is not responsible for any discrepancies between the project documents and the existing conditions.

© LPA, Inc.

ELKHORN ELEMENTARY SCHOOL
CAMPUS MODERNIZATION INCREMENT 1

10505 DAVIS ROAD, STOCKTON, CA 95290

Developed for
LODI UNIFIED SCHOOL DISTRICT

Revision	Date

Submittal	Date
100% SCHEMATIC DESIGN	08/29/2025
DSA SUBMITTAL	12/18/2025

Job Number	3194201
Checked By	AW, EW
Scale	AS NOTED

LAYOUT PLAN

1L2.01

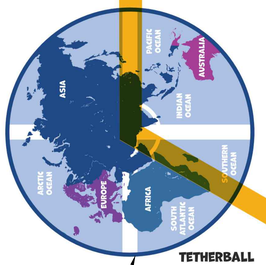

TETHERBALL COURT LAYOUT PER DETAIL 10/1L5.04

TETHERBALL

HOW TO PLAY

1. The player serving first selects a direction to hit the ball, the receiving player hits the ball back in the opposite direction.
2. The objective is to hit the ball in your direction so the rope wraps completely around the pole. One point is awarded for wrapping the rope completely around the pole.
3. Players are not allowed to cross to the opponent's side, striking the ball more than once before it wraps around the pole or the opponent hits it, hitting the ball with any part of the body other than the hands or arms, holding or catching the ball, touching the rope. If any of these penalties occur, play is paused and the ball is returned to where it was wrapped before the penalty occurred.

TETHERBALL COURT LAYOUT PER DETAIL 10/1L5.04

TETHERBALL

HOW TO PLAY

1. The player serving first selects a direction to hit the ball, the receiving player hits the ball back in the opposite direction.
2. The objective is to hit the ball in your direction so the rope wraps completely around the pole. One point is awarded for wrapping the rope completely around the pole.
3. Players are not allowed to cross to the opponent's side, striking the ball more than once before it wraps around the pole or the opponent hits it, hitting the ball with any part of the body other than the hands or arms, holding or catching the ball, touching the rope. If any of these penalties occur, play is paused and the ball is returned to where it was wrapped before the penalty occurred.

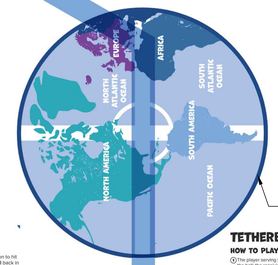

TETHERBALL COURT LAYOUT PER DETAIL 10/1L5.04

TETHERBALL

HOW TO PLAY

1. The player serving first selects a directionto hit the ball, the receiving player hits the ball back in the opposite direction.
2. The objective is to hit the ball in your direction so the rope wraps completely around the pole. One point is awarded for wrapping the rope completely around the pole.
3. Players are not allowed to cross to the opponent's side, striking the ball more than once before it wraps around the pole or the opponent hits it, hitting the ball with any part of the body other than the hands or arms, holding or catching the ball, touching the rope. If any of these penalties occur, play is paused and the ball is returned to where it was wrapped before the penalty occurred.

COLOR PALETTE

C:0 M:0 Y:0 K:100	C:71 M:65 Y:62 K:64	C:68 M:61 Y:58 K:44	C:0 M:0 Y:0 K:80	C:0 M:0 Y:0 K:60	C:0 M:0 Y:0 K:40	C:0 M:0 Y:0 K:20
C:100 M:80 Y:20 K:5	C:84 M:56 Y:15 K:1	C:51 M:25 Y:0 K:0	C:46 M:29 Y:0 K:0	C:31 M:17 Y:0 K:0		
C:18 M:99 Y:100 K:10	C:8 M:96 Y:98 K:1	C:3 M:69 Y:100 K:0	C:3 M:34 Y:100 K:0	C:9 M:26 Y:40 K:0	C:56 M:0 Y:100 K:0	C:76 M:0 Y:100 K:0
C:73 M:14 Y:27 K:0	C:51 M:25 Y:0 K:0	C:62 M:87 Y:0 K:0	C:39 M:90 Y:0 K:0			

NOTE:
A. REFER TO SPEC FOR 'STREETBOND' GRAPHICS/COLORS AT CONCRETE CONDITION.
B. REFER TO SPEC FOR 'STREETBOND' GRAPHICS/COLORS AT ASPHALT CONDITION.
C. CONTRACTOR SHALL FIELD VERIFY ALL PLAY STRIPING AND PROVIDE SHOP DRAWING LAYOUT FOR REVIEW PRIOR TO ANY 'STREETBOND' APPLICATION SHALL OCCUR.

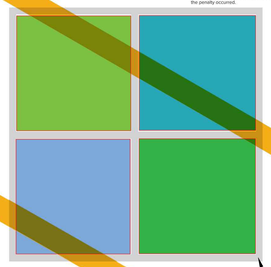

FOUR SQUARE LAYOUT PER DETAIL 01/1L5.04

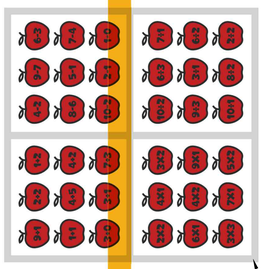

FOUR SQUARE LAYOUT PER DETAIL 01/1L5.04

COLOR WITH COUNTING

Color the solution of the applied

COLOR KEY

1,2=Red **3,4,5**=Yellow **10,11,12**=Green

4-SQUARE

OBJECTIVE

The purpose of the game is to move up through the numbered squares from the bottom to the top.

A minimum 4 players is ideal, everyone rotates up one square and that person goes to the back of the line.

RULES

1. Everyone must hit underhand.
2. Everyone begins on 1 (or on lines 9th, 11, or 12 if additional players are joining the game).
3. The ball can only bounce once in your square before you strike it towards another square. If the ball bounces more than once in your square, the person in the line behind you is now the person in your square.
4. No carrying, rolling, or kicking the ball. If you do, you are out, and the person behind you is now in your square.
5. You can move anywhere outside the square or within your section of the square.

THE MOLECULE OF LIFE

Follow the color key to reveal the molecule of life!

COLOR KEY

1=Blue 2=Light Blue 3=Yellow 4=Red
5=Orange 6=Green 7=Pink 8=Purple

4-SQUARE

OBJECTIVE

The purpose of the game is to move up through the numbered squares from the bottom to the top.

A minimum 4 players is ideal, everyone rotates up one square and that person goes to the back of the line.

RULES

1. Everyone must hit underhand.
2. Everyone begins on 1 (or on lines 9th, 11, or 12 if additional players are joining the game).
3. The ball can only bounce once in your square before you strike it towards another square. If the ball bounces more than once in your square, the person in the line behind you is now the person in your square.
4. No carrying, rolling, or kicking the ball. If you do, you are out, and the person behind you is now in your square.
5. You can move anywhere outside the square or within your section of the square.

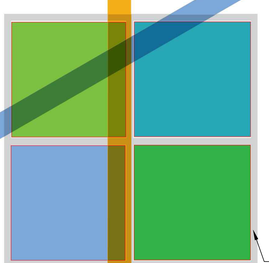

FOUR SQUARE LAYOUT PER DETAIL 01/1L5.04

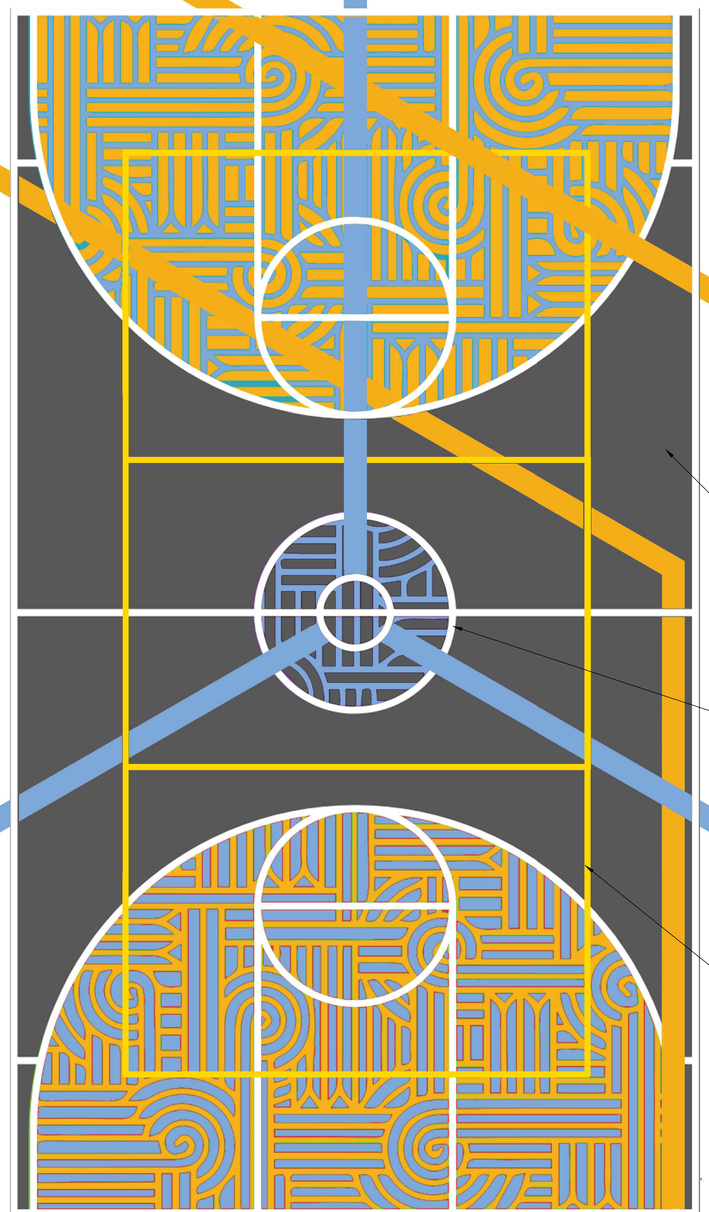

UNCOLORED ASPHALT, TYP

BASKETBALL COURT LAYOUT PER DETAIL 11/1L5.04.

VOLLEYBALL COURT LAYOUT PER DETAIL 02/1L5.04.

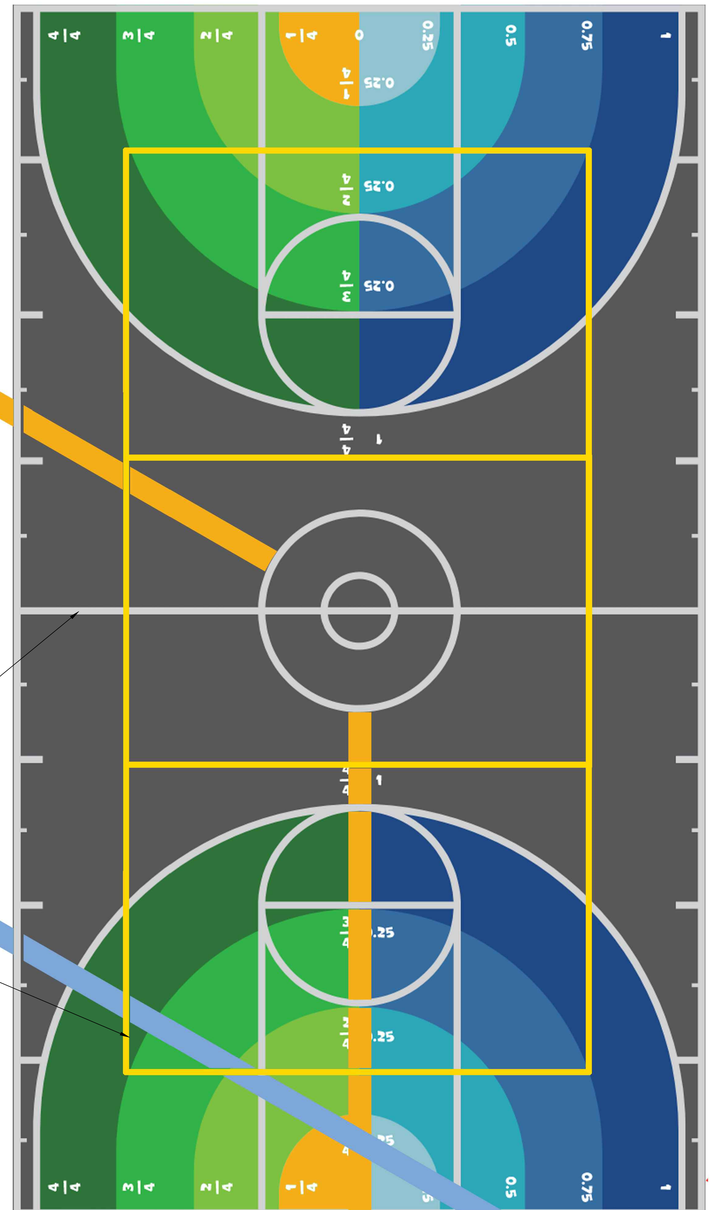

N

HARDCOURT PLAY AREA ENLARGEMENT | 1/4" = 1'-0" | 01

IDENTIFICATION STAMP
DIV. OF THE STATE ARCHITECT
APP: 02-123848 INC: 01
REVIEWED FOR
SS ☑ FLS ☑ ACS ☑
DATE: 05/21/2026

LPA
ARCHITECTURE ENGINEERING INTERIOR DESIGN
LANDSCAPE ARCHITECTURE PLANNING
949-261-1001 Office
LPADesignStudios.com
5301 California Avenue, Suite 100
Irvine, California 92617

LICENSED LANDSCAPE ARCHITECT
04/02/26
10/31/2026
LICENSE EXPIRATION DATE
STATE OF CALIFORNIA

This document and all other project documents, ideas, aesthetics and designs incorporated therein are instruments of service. All project documents are copyright protected, are the property of LPA, Inc. (LPA) and cannot be lawfully used in whole or in part for any project or purpose except as set forth in the contractual agreement between LPA and its Client. The unauthorized disclosure and/or use of the project documents (including the creation of derivative works), may give rise to liability for copyright infringement, unlawful disclosure, use or misappropriation of property rights held by LPA. The unauthorized use of the project documents will give rise to the recovery of monetary losses and damages including attorney fees and costs for which the unauthorized user will be held liable.
Project documents describe the design intent of the work and are not a representation of as-built or existing conditions. LPA is not responsible for any discrepancies between the project documents and the existing conditions.

© LPA, Inc.

ELKHORN ELEMENTARY SCHOOL
CAMPUS MODERNIZATION INCREMENT 1

10505 DAVIS ROAD, STOCKTON, CA 95290

Developed for
LODI UNIFIED SCHOOL DISTRICT

Revision	Date

Submittal	Date
100% SCHEMATIC DESIGN	09/29/2025
DSA SUBMITTAL	12/18/2025

Job Number	3194201
Checked By	AW, EW
Scale	AS NOTED

ENLARGEMENT PLAN

1L3.01

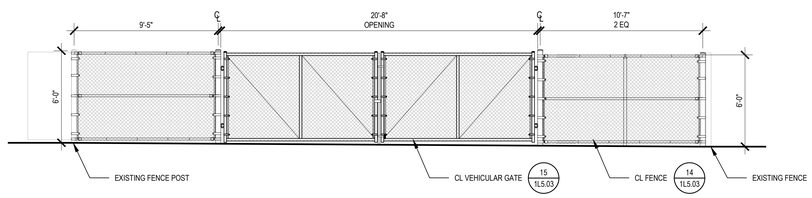

ELEVATION OF DOUBLE SWING GATE AT NORTH PARKING LOT | 1/4" = 1'-0" | 1L1.01 | 11

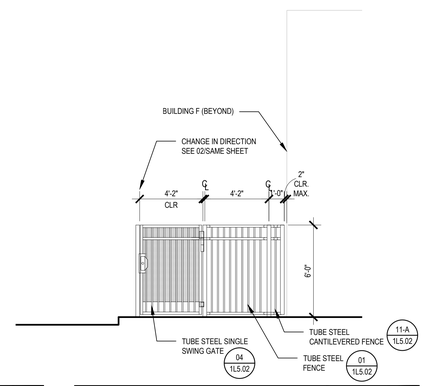

ELEVATION AT WESTERN SINGLE SWING GATE | 1/4" = 1'-0" | 1L1.01 | 07

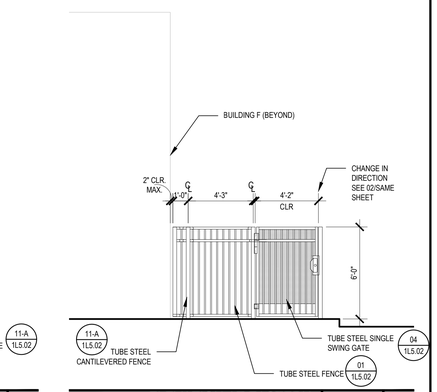

ELEVATION AT EASTERN SINGLE SWING GATE | 1/4" = 1'-0" | 1L1.01 | 03

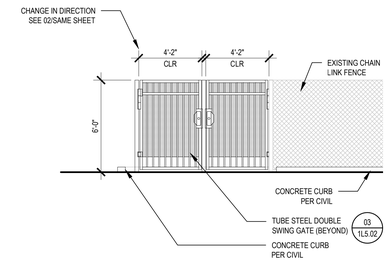

ELEVATION AT DOUBLE SWING GATE | 1/4" = 1'-0" | 1L1.01 | 04

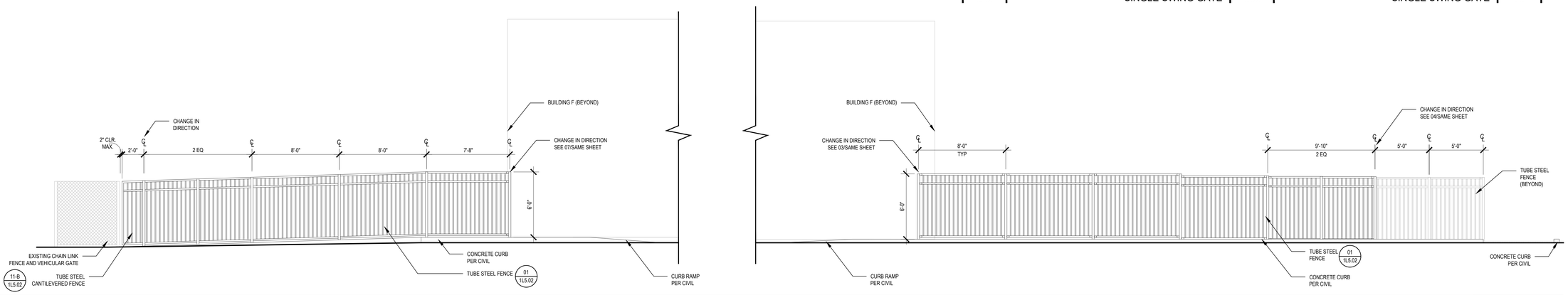

ELEVATION AT DROP OFF | 1/4" = 1'-0" | 1L1.01 | 02

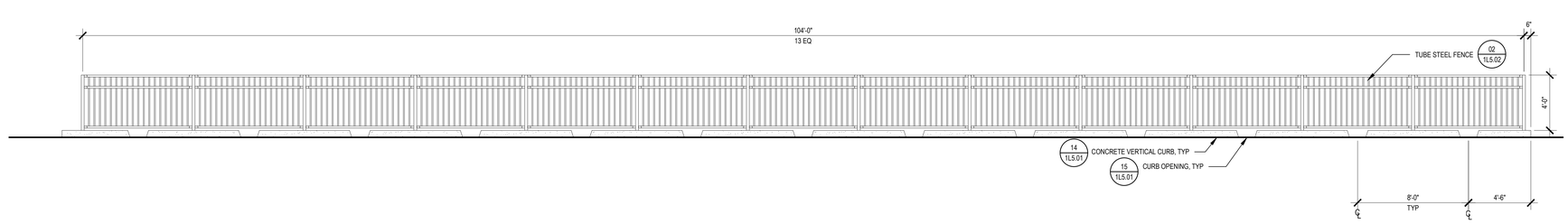

ELEVATION AT DROP OFF VEHICLE BARRIER | 1/4" = 1'-0" | 1L1.01 | 01

IDENTIFICATION STAMP
DIV. OF THE STATE ARCHITECT
APP: 02-123848 INC: 01
REVIEWED FOR
SS ☑ FLS ☑ ACS ☑
DATE: 05/21/2026

LPA
ARCHITECTURE ENGINEERING INTERIOR DESIGN
LANDSCAPE ARCHITECTURE PLANNING
949-261-1001 Office
LPADesignStudios.com
5301 California Avenue, Suite 100
Irvine, California 92617

LICENSED LANDSCAPE ARCHITECT
04/02/26
10/31/2026
EXPIRATION DATE
STATE OF CALIFORNIA

This document and all other project documents, ideas, aesthetics and designs incorporated therein are instruments of service. All project documents are copyright protected, are the property of LPA, Inc. (LPA) and cannot be lawfully used in whole or in part for any project or purpose except as set forth in the contractual agreement between LPA and its Client. The unauthorized disclosure and/or use of the project documents (including the creation of derivative works), may give rise to liability for copyright infringement, unlawful disclosure, use or misappropriation of property rights held by LPA. The unauthorized use of the project documents will give rise to the recovery of monetary losses and damages including attorney fees and costs for which the unauthorized user will be held liable.
Project documents describe the design intent of the work and are not a representation of as-built or existing conditions. LPA is not responsible for any discrepancies between the project documents and the existing conditions.

© LPA, Inc.

ELKHORN ELEMENTARY SCHOOL
CAMPUS MODERNIZATION INCREMENT 1

10505 DAVIS ROAD, STOCKTON, CA 95290

Developed for
LODI UNIFIED SCHOOL DISTRICT

Revision	Date

Submittal	Date
100% SCHEMATIC DESIGN	08/29/2025
DSA SUBMITTAL	12/18/2025

Job Number	3194201
Checked By	AW, EW
Scale	AS NOTED

SITE SECTIONS AND ELEVATIONS

1L4.01

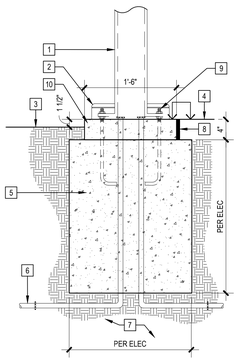

LIGHT POLE AT FLUSH BASE

1. LIGHT POLE PER ELECTRICAL PLANS.
2. POLE BASE COVER. REFER TO ELECTRICAL PLANS FOR ADDITIONAL INFORMATION
3. FINISH GRADE @ PLANTING
4. FINISHED SURFACE PER MATERIALS PLAN
5. C.I.P. CONCRETE FOOTING DIMENSIONS AND REINFORCEMENT PER ELECTRICAL PLANS
6. CONDUIT & STUB OUT PER ELECTRICAL PLANS
7. BASE MATERIAL & COMPACTED SUBGRADE PER THE GEOTECHNICAL REPORT
8. EXPANSION JOINT AT VERTICAL SURFACE PER (08 / -)
9. BASE PLATE AND ANCHOR BOLTS PER POLE MANUFACTURER SPEC'S
10. 4" THICK CONCRETE PAD

NOTES:

1. REFER TO ELECTRICAL DRAWINGS FOR FOOTING & ADDITIONAL INFORMATION (01 / 1E7.10)

2. CONCRETE BASE AT LIGHT (CONDITION B) TO MATCH ADJACENT CURB OR PAVING IN COLOR AND FINISH

LIGHT POLE FOOTING | 1" = 1'-0" | - | **20**

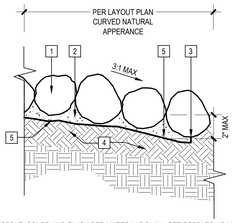

1. COBBLE. COLOR AND FINISH PER MATERIALS PLAN. SET COBBLES 1/3 MAX DEPTH INTO MORTAR SETTING BED. COBBLES SHALL TOUCH AND BE ARRANGED TO MINIMIZE EXPOSED MORTAR
2. 2" DEEP 2,000 PSI MIN MORTAR SETTING BED, COLOR TO MATCH COBBLE
3. COBBLE SHALL CONTAIN THE PERIMETER WITH NO MORTAR OVERPOUR
4. COMPACTED SUBGRADE PER GEOTECH
5. MIRAFI 140N FILTER FABRIC BELOW MORTAR SHALL NOT BE EXPOSED

NOTE:
A. FIELD VERIFY LOCATIONS WITH LANDSCAPE ARCHITECT PRIOR TO INSTALLATION
B. MAINTAIN POSITIVE FLOW AWAY FROM WATER SOURCE
C. REFER TO LANDSCAPE MATERIALS AND LAYOUT PLANS FOR COBBLE EXTENTS AND ADDITIONAL REQUIREMENTS

GROUTED COBBLE | 1" = 1'-0" | - | **16**

1. BOULDER PER KEYNOTE LEGEND, L0.01
2. FINISHED SURFACE, WHERE OCCURS, SEE MATERIALS PLAN
3. FINISHED GRADE AT PLANTING AREA, WHERE OCCURS
4. COMPACTED SUBGRADE PER GEOTECH REPORT

TYPE	HEIGHT	WIDTH	QUANTITY
A	3'	5'	2
B	3'	3'	5
C	2'	3'	2

NOTE:
A. BOULDERS ARE TO BE SELECTED BY LANDSCAPE ARCHITECT FROM SUPPLY YARD.
B. PROVISIONS ARE TO BE MADE FOR THE PLACEMENT OF BOULDERS ON SITE USING A METHOD ALLOWING FOR FULL 360 DEGREE ROTATION OF BOULDER IN AIR SUCH AS ARTICULATED KNUCKLE BOOM. NO BACK HOE, DRAGGING OR PUSHING OF BOULDERS WILL BE ACCEPTABLE.
C. BOULDERS SHALL BE POWER WASHED PRIOR TO PLACEMENT.
D. BOULDER LOCATION TO BE SELECTED BY LANDSCAPE ARCHITECT ON SITE DURING INSTALLATION.
E. BOULDER DIAMETER VARIES. REFER TO TABLE AT LEFT AND MATERIALS PLANS FOR BOULDER TYPES, SIZES, AND LOCATION.

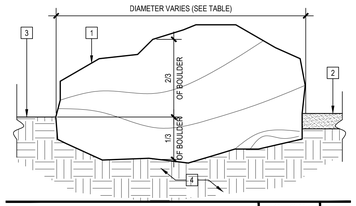

BOULDERS | 1" = 1'-0" | - | **12**

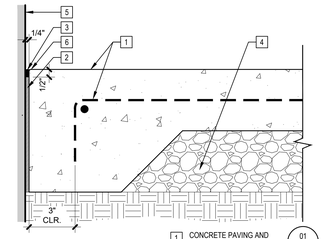

NOTES:
A. PROVIDE EXPANSION JOINT AT ALL VERTICAL SURFACES.
B. EXPANSION JOINT AT CURB PER (05 / -) DETAIL
C. NATIVE OR FILL SOIL SUPPORTING EXTERIOR NON-STRUCTURAL FLATWORK AND UNPAVED LANDSCAPING AREAS ARE EXEMPT FROM SPECIAL INSPECTION AND TESTING.
D. CONCRETE BATCH PLANT INSPECTION IS NOT REQUIRED.

1. CONCRETE PAVING AND REINFORCEMENT PER DETAIL (01 / -)
2. EXPANSION JOINT FILLER; MATCH FULL DEPTH OF CONC. PAVING; PER (04 / -)
3. JOINT SEALANT PER (04 / -)
4. BASE MATERIAL AND SUBGRADE PER DETAIL (01 / -)
5. FACE OF VERTICAL SURFACE
6. 1/4" RADIUS

EXPANSION JOINT AT VERTICAL SURFACE | 3" = 1'-0" | - | **08**

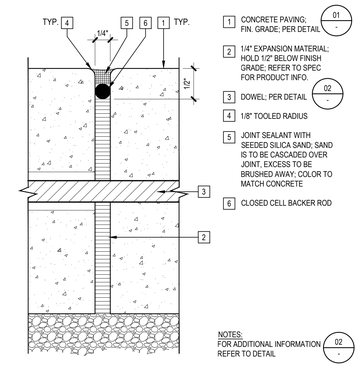

1. CONCRETE PAVING; FIN. GRADE; PER DETAIL (01 / -)
2. 1/4" EXPANSION MATERIAL; HOLD 1/2" BELOW FINISH GRADE; REFER TO SPEC FOR PRODUCT INFO.
3. DOWEL; PER DETAIL (02 / -)
4. 1/8" TOOLED RADIUS
5. JOINT SEALANT WITH SEEDED SILICA SAND; SAND IS TO BE CASCADED OVER JOINT, EXCESS TO BE BRUSHED AWAY; COLOR TO MATCH CONCRETE
6. CLOSED CELL BACKER ROD

NOTES:
FOR ADDITIONAL INFORMATION REFER TO DETAIL (02 / -)

EXPANSION JOINT ENLARGEMENT | N.T.S. | - | **04**

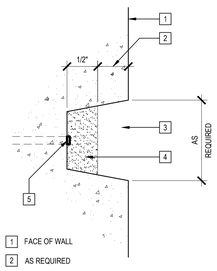

1. FACE OF WALL
2. AS REQUIRED
3. VOID FROM SNAP TIE CONE
4. QUICK SET HYDRAULIC NON-SHRINK CEMENT
5. SNAP TIE - CUT FLUSH WITH BACK OF CONE VOID

NOTES:
A. ALL SNAP TIES TO BE ALIGNED VERTICALLY AND HORIZONTALLY ALONG THEIR CENTERLINES.
B. CONTRACTOR TO SUBMIT SHOP DRAWINGS OF SNAP TIE LAYOUT TO LANDSCAPE ARCHITECT PRIOR TO CONSTRUCTION.

INFILL AT WALL SNAP TIE VOID | FULL | - | **23**

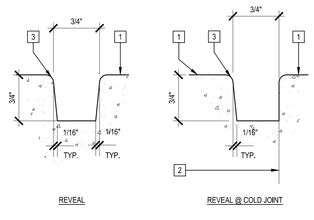

1. CONCRETE WALL PER MATERIALS PLAN.
2. COLD JOINT.
3. 1/8" TOOLED/STONED CORNERS & EDGES.

NOTES:
A. PROVIDE REVEAL @ ALL COLD JOINTS.
B. REVEAL SHOULD BE CONTINUOUS ON SIDES & TOP OF WALL, UNLESS OTHERWISE NOTED ON PLAN OR ELEVATION.
C. REFER TO PLANS & ELEVATIONS FOR JOINT SIZE & LOCATION.
D. ALIGN ALL FORM JOINTS W/REVEALS. CUSTOM CUT FORMS AS REQUIRED.

CONCRETE WALL REVEALS | FULL / SAME | **19**

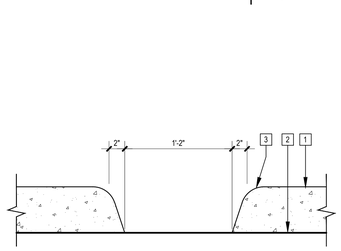

NOTES:

A. CONCRETE BATCH PLANT INSPECTION IS NOT REQUIRED.

1. VERTICAL CONCRETE CURB; REFER TO MATERIALS PLAN FOR FINISH AND COLOR. (14 / -)
2. FINISH SURFACE; REFER TO MATERIALS PLAN FOR ADJACENT SURFACE MATERIAL
3. 3" RADIUS, TYP

OPENING AT CONCRETE VERTICAL CURB | 1 1/2" = 1'-0" | - | **15**

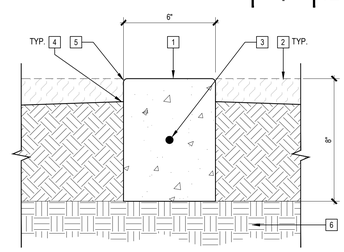

1. CONCRETE FLUSH CURB; REFER TO MATERIALS PLAN FOR FINISH.
2. PLANTING AREA; FINISH GRADE TOP OF BARK MULCH OR TURF.
3. #4 CONTINUOUS HORIZONTAL REINFORCING.
4. AMENDED TOP SOIL; FIN. GRADE ADJACENT TO CONC. BAND: 1" BELOW CONC. BAND AT TURF. 1.5" BELOW CONC. BAND AT SHRUB AND GROUNDCOVER AREA.
5. 1/4" TOOLED RADIUS; TYP. AT BOTH SIDES OF BAND.
6. COMPACTED SUBGRADE; REFER TO CIVIL DWG'S.

NOTES:
A. PROVIDE SCORE JOINT EVERY 10'-0" OR TO ALIGN WITH PAVING JOINTS & EXPANSION JOINT EVERY 30' & AT EVERY CHANGE IN DIRECTION (02 / -)

CONCRETE FLUSH CURB @ PLANTING AREA | 3" = 1'-0" | - | **11**

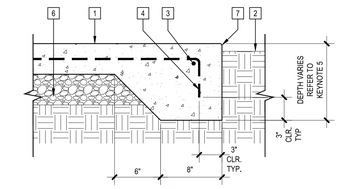

1. CONCRETE PAVING; REFER TO DTL. (01 / -)
2. ADJACENT SURFACE/ FINISH GRADE; REFER TO PER MATERIALS PLAN. 1" BELOW CONC. EDGE AT TURF. 1-1/2" BELOW CONC. EDGE AT SHRUB AND GROUNDCOVER AREA.
3. #4 REINFORCING; CONTINUOUS
4. EXTEND REINFORCEMENT FROM PAVING INTO THICKENED EDGE & WRAP ENDS
5. THICKENED EDGE; 9" DEPTH FOR PEDESTRIAN PAVING; 12" DEPTH FOR VEHICULAR PAVING
6. BASE MATERIAL & COMPACTED SUBGRADE; REFER TO DTL. (01 / -)
7. EASE ALL EDGES; 1/4"R, TYP.

NOTE:
FOR EDGE CONDITION ADJACENT TO VERTICAL SURFACE REFER TO DTL. (08 / -)

CONC. PAVING THICKENED EDGE | 1 1/2" = 1'-0" | - | **07**

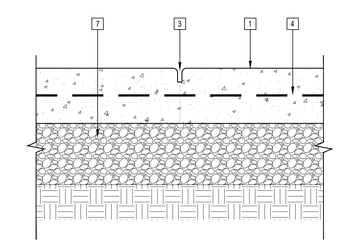

A. SAWCUT CONTROL JOINT

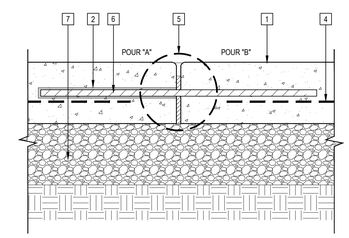

B. EXPANSION JOINT

1. CONCRETE PAVING; REFER TO DETAIL (01 / -)
2. SPEED DOWEL; BY SIKA CORPORATION CONCRETE ACCESSORIES; PRODUCT # PSD12/ #4TX
3. SAWCUT CONTROL JOINT; 1/8-INCH WIDE; CUT TO 1/4 DEPTH OF SLAB; PROVIDE TIGHT 1/8-INCH RADIUS ON EDGE OF PAVING BEFORE SAWCUTTING.
4. CONCRETE PAVING REINFORCEMENT; REFER TO DETAIL (01 / -)
5. JOINT ENLARGEMENT; REFER TO DETAIL (04 / -)
6. PEDESTRIAN: 1/2"Ø SMOOTH STEEL DOWEL; 18" @ 24" O.C. VEHICULAR: 5/8"Ø SMOOTH STEEL DOWEL; 18" @ 24" O.C.
7. AGGREGATE BASE AND SUBGRADE; REFER TO PAVING DETAIL (01 / -)

NOTES:
A. NATIVE OR FILL SOIL SUPPORTING EXTERIOR NON-STRUCTURAL FLATWORK AND UNPAVED LANDSCAPING AREAS ARE EXEMPT FROM SPECIAL INSPECTION AND TESTING.
B. CONCRETE BATCH PLANT INSPECTION IS NOT REQUIRED.

CONCRETE PAVING JOINTS | 3" = 1'-0" | - | **02**

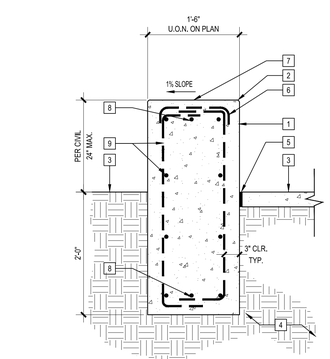

1. CONCRETE FREE-STANDING WALL PER MATERIALS PLAN. REFER TO KEYNOTE LEGEND FOR COLOR & FINISH
2. 1/8" EASED EDGE RADIUS, TYP. ALL EDGES, NO CHAMFERS
3. FINISH SURFACE/FINISH GRADE; REFER TO MATERIALS PLAN FOR TYPE.
4. OVER-EXCAVATION, SUBGRADE SCARIFICATION/COMPACTION SHALL BE PER GEOTECHNICAL REPORT
5. EXPANSION JOINT PER (08 / -)
6. #4 @ 12" O.C.
7. TOP OF WALL PER CIVIL GRADING PLAN
8. (3) #4 CONTINUOUS AT TOP AND BOTTOM
9. #4 @ 12" O.C. EACH WAY AND EACH FACE W/ STD 90 DEG HOOKS EA END

NOTES:
A. REVEAL (18 / -)
B. REFER TO PLANS & ELEVATIONS FOR LOCATION OF JOINTS.
C. ALL FORM SEAMS ARE TO ALIGN WITH REVEALS SHOWN ON ELEVATIONS & PLANS. PROVIDE CUSTOM FORM BOARDS AS REQUIRED.
D. PROVIDE PERMANENT NON-SACRIFICIAL ANTI-GRAFFITI COATING ON ALL EXPOSED WALL SURFACES.(SEE SPECS)
E. CONCRETE BATCH PLANT INSPECTION IS NOT REQUIRED
F. DSA SSS REVIEW IS NOT REQUIRED PER IR A-22

CONCRETE FREE-STANDING WALL | 1" = 1'-0" | - | **17**

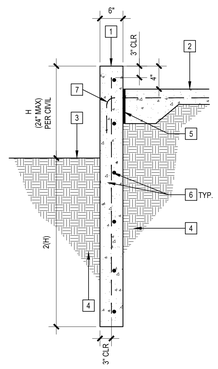

1. CONCRETE RETAINING WALL, REFER TO MATERIALS PLAN KEYNOTE LEGEND FOR FINISH AND COLOR
2. ADJACENT CONCRETE PAVING PER MATERIALS PLAN
3. FINISH GRADE OF ADJACENT PAVING PER MATERIALS PLAN
4. SUBGRADE OVEREXCAVATION AND COMPACTION PER GEOTECHNICAL REPORT.
5. EXPANSION JOINT @ VERTICAL SURFACE (08 / -)
6. #4 @ 12" O/C VERTICALS AND #4 @ 12" O/C HORIZONTALS CENTERED IN WALL
7. #4 X 24" LONG @ 12" O/C SLAB DOWELS W/ STD 90 DEG HOOK

NOTES:
A. 8' MAX O.C. REVEAL/COLD JOIN PER 19/1L5.01
B. REFER TO MATERIALS PLANS FOR LOCATION OF JOINTS.
C. ALL FORM SEAM ARE TO ALIGN WITH REVEALS SHOWN ON PLANS. PROVIDE CUSTOM FORM BOARDS AS REQUIRED.
D. FOR INFILL AT SNAP-TIE, REFER TO (23 / -)

CONCRETE RETAINING WALL FOR RAMP | 3/4" = 1'-0" | - | **18**

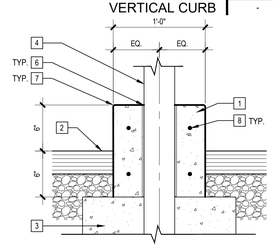

1. VERTICAL CONCRETE CURB; REFER TO MATERIALS PLAN FOR FINISH AND COLOR.
2. FINISH GRADE/ FINISH SURFACE; REFER TO MATERIALS PLAN FOR ADJACENT SURFACE MATERIAL
3. FENCE POST FOOTING (16 / L5.02)
4. FENCE POST
5. BASE MATERIAL AND COMPACTED SUBGRADE PER CIVIL DETAILS
6. EXPANSION JOINT AT VERTICAL SURFACE (08 / -)
7. 1/4" RADIUS, TYP.
8. (4) #3 REBAR CONTINUOUS

NOTES:
A. PROVIDE EXPANSION JOINT @ ± 20' O.C. W/ TOOLED CONTROL JOINTS AT ± 5' O.C.
B. CONCRETE BATCH PLANT INSPECTION IS NOT REQUIRED.
C. WHERE CURB OPENING OCCURS (15 / -)

CONCRETE VERTICAL CURB AT FENCE POST | 1 1/2" = 1'-0" | - | **14**

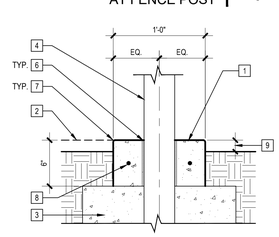

1. FLUSH CONCRETE CURB; REFER TO MATERIALS PLAN FOR FINISH AND COLOR.
2. FINISH GRADE/ FINISH SURFACE; REFER TO MATERIALS PLAN FOR ADJACENT SURFACE MATERIAL
3. FENCE POST FOOTING (16 / L5.02)
4. FENCE POST
5. BASE MATERIAL AND COMPACTED SUBGRADE PER CIVIL DETAILS
6. EXPANSION JOINT AT VERTICAL SURFACE (08 / -)
7. 1/4" RADIUS, TYP.
8. (2) #3 REBAR CONTINUOUS
9. 2 1/2" @ SHRUBS/GROUNDCOVER 1" @ TURF

NOTES:
A. PROVIDE EXPANSION JOINT @ ± 20' O.C. W/ TOOLED CONTROL JOINTS AT ± 5' O.C.
B. CONCRETE BATCH PLANT INSPECTION IS NOT REQUIRED.

CONCRETE FLUSH CURB AT FENCE POST | 1 1/2" = 1'-0" | - | **13**

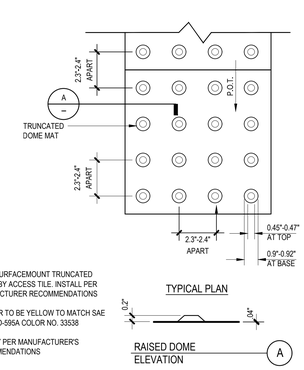

NOTES:
1. USE SURFACEMOUNT TRUNCATED DOMES BY ACCESS TILE. INSTALL PER MANUFACTURER RECOMMENDATIONS
2. COLOR TO BE YELLOW TO MATCH SAE AMS-STD-595A COLOR NO. 33538
3. APPLY PER MANUFACTURER'S RECOMMENDATIONS

DETECTABLE WARNING PAVERS | 3" = 1'-0" | - | **09**

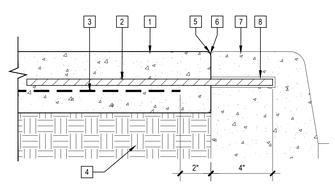

NOTES:
A. NATIVE OR FILL SOIL SUPPORTING EXTERIOR NON-STRUCTURAL FLATWORK AND UNPAVED LANDSCAPING AREAS ARE EXEMPT FROM SPECIAL INSPECTION AND TESTING.
B. CONCRETE BATCH PLANT INSPECTION IS NOT REQUIRED.

1. CONCRETE PAVING; REFER TO DTL (01 / -)
2. 1/2" DOWEL @ 24 O.C.
3. CONCRETE PAVING STEEL REINFORCEMENT; REFER TO DTL. (01 / -)
4. BASE MATERIAL & COMPACTED SUBGRADE; REFER TO DTL. (01 / -)
5. 1/8" RADIUS
6. EXPANSION JOINT; REFER TO DTL. (02 / -)
7. CONCRETE CURB; REFER TO CIVIL DTL.
8. DRILLED 5/8" DIA. SLIP SLEEVE AT CONCRETE CURB; DOWEL TO HAVE FREE MOVEMENT THIS SIDE

PAVING JOINT AT CURB | 3" = 1'-0" | - | **05**

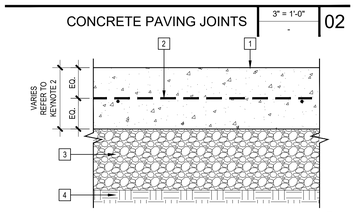

1. CONCRETE PAVING; REFER TO MATERIALS PLAN KEYNOTE LEGEND FOR FINISH & COLOR.
2. FOR PAVING THICKNESS & REINFORCEMENT SEE CIVIL (01 / 1C7.01)
3. AGGREGATE BASE SEE CIVIL (01 / 1C7.01)
4. SUBGRADE COMPACTION & OVER EXCAVATION SEE CIVIL (01 / 1C7.01)

NOTES:
A. SAWCUT & EXPANSION JOINTS; REFER TO DETAIL. (02 / -)
B. PROVIDE DOWELS WHERE NEW CONCRETE TIES INTO EXISTING PER DETAIL. (06 / -)
C. PROVIDE THICKENED EDGE AT COLUMNS, SITE AND BLDG. WALLS, AND WHERE PAVING IS ADJACENT TO PLANTING AREAS. (07 / -)
D. DO NOT ALLOW CONCRETE OVER-POUR INTO ADJACENT PLANTING AREA.
E. NATIVE OR FILL SOIL SUPPORTING EXTERIOR NON-STRUCTURAL FLATWORK AND UNPAVED LANDSCAPING AREAS ARE EXEMPT FROM SPECIAL INSPECTION AND TESTING.
F. CONCRETE BATCH PLANT INSPECTION IS NOT REQUIRED.

CONCRETE PAVING | 3" = 1'-0" | - | **01**

IDENTIFICATION STAMP
DIV. OF THE STATE ARCHITECT
APP: 02-123848 INC: 01
REVIEWED FOR
SS ☑ FLS ☑ ACS ☑
DATE: 05/21/2026

LPA
ARCHITECTURE ENGINEERING INTERIOR DESIGN
LANDSCAPE ARCHITECTURE PLANNING
949-261-1001 Office
LPADesignStudios.com
5301 California Avenue, Suite 100
Irvine, California 92617

LICENSED LANDSCAPE ARCHITECT
NO. 5079
04/02/26
10/31/2026
RENEWAL DATE
STATE OF CALIFORNIA

This document and all other project documents, ideas, aesthetics and designs incorporated therein are instruments of service. All project documents are copyright protected, are the property of LPA, Inc. (LPA) and cannot be lawfully used in whole or in part for any project or purpose except as set forth in the contractual agreement between LPA and its Client. The unauthorized disclosure and/or use of the project documents (including the creation of derivative works), may give rise to liability for copyright infringement, unlawful disclosure, use or misappropriation of property rights held by LPA. The unauthorized use of the project documents will give rise to the recovery of monetary losses and damages including attorney fees and costs for which the unauthorized user will be held liable.
Project documents describe the design intent of the work and are not a representation of as-built or existing conditions. LPA is not responsible for any discrepancies between the project documents and the existing conditions.

© LPA, Inc.

ELKHORN ELEMENTARY SCHOOL
CAMPUS MODERNIZATION INCREMENT 1

10505 DAVIS ROAD, STOCKTON, CA 95290

Developed for
LODI UNIFIED SCHOOL DISTRICT

Revision	Date

Submittal	Date
100% SCHEMATIC DESIGN	08/29/2025
DSA SUBMITTAL	12/18/2025

Job Number	3194201
Checked By	AW, EW
Scale	AS NOTED

CONSTRUCTION DETAILS

1L5.01

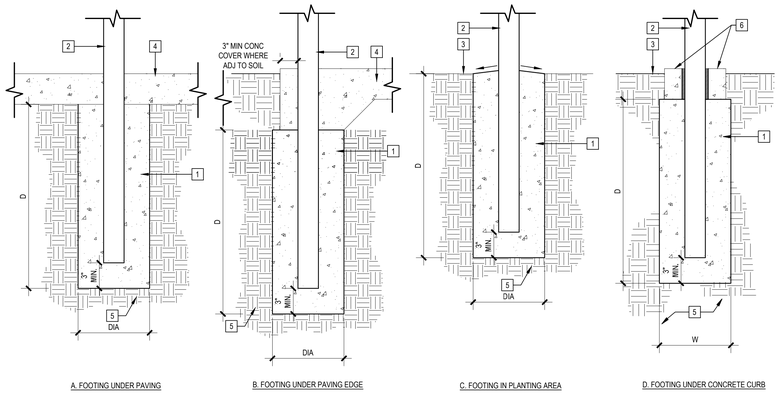

A. FOOTING UNDER PAVING

B. FOOTING UNDER PAVING EDGE

C. FOOTING IN PLANTING AREA

D. FOOTING UNDER CONCRETE CURB

1. CONCRETE FOOTING; REFER TO SCHEDULE FOR SIZES; 3000 PSI @ 28 DAY
2. FENCE OR GATE POSTS
3. FINISH SURFACE / FINISH GRADE
4. CONCRETE OR A.C. PAVING; REFER TO MATERIALS PLAN FOR LOCATIONS; FINISH GRADE (01 / 1L5.01)
5. SUBGRADE
6. CONCRETE CURB PER (13 / 1L5.01) (14 / 1L5.01)

NOTES:
A. EXEMPT FROM DSA SS REVIEW

CAISSON SCHEDULE

	CAISSON DESCRIPTION	HT	D	DIA
	TUBE STEEL PICKET FENCE POST	4'	4'-6"	1'-0"
	TUBE STEEL PICKET FENCE POST	6'	5'-0"	1'-0"
	TUBE STEEL PICKET GATE POST(WIDTH UNDER 4')	6'	5'-6"	1'-6"
	CL FENCE LINE POST	6'	4'-6"	1'-0"
	CL FENCE CORNER/END POST CL GATE POST (LEAF WIDTH 4' MAX)	6'	6'-0"	1'-6"
	CL GATE POST (LEAF WIDTH 10' MAX)	6'	7'-0"	1'-6"
	CL FENCE W/SLAT LINE POST	8'	5'-0"	1'-0"
	CL FENCE W/SLAT CORNER/END POST CL GATE W/ SLAT POST (LEAF WIDTH 4' MAX)	8'	7'-0"	1'-6"

FENCE AND GATE POST FOOTING — 1"=1'-0" — 16

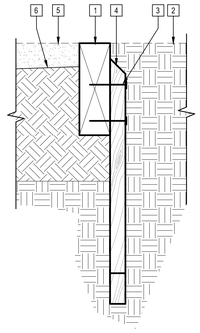

1. 2x6 ROUGH SAWN REDWOOD HEADER
2. EXISTING PLANTING AREA
3. 1x2x18" LONG WOOD STAKES AT 3' O.C.; ATTACHED TO HEADER WITH (2) 16d GALV. NAILS PER STAKE.
4. TRIM TOP OF STAKE AT 45 DEG. ANGLE; TOP SHALL NOT PROTRUDE ABOVE HEADERBOARD; TYP.
5. PLANTING AREA; FINISH GRADE TOP OF BARK MULCH OR TURF.
6. AMENDED TOP SOIL FIN. GRADE ADJACENT TO HEADER: 1" BELOW HEADER AT TURF. 2" BELOW HEADER AT SHRUB AND GROUNDCOVER AREA

REDWOOD HEADER BOARD — 3" = 1'-0" — 12

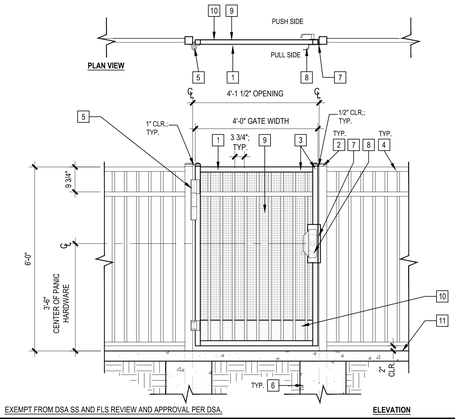

EXEMPT FROM DSA SS AND FLS REVIEW AND APPROVAL PER DSA.

1. GATE TO MATCH: AMERISTAR, MONTAGE II, MAJESTIC, 3-RAIL
2. END POST: 3" SQ., 12 GA; PROVIDE CAP PER MANUFACTURER
3. GATE FRAME: 2" SQ. X 12 GA.
4. ADJACENT TUBE STEEL FENCE (01 / -)
5. LOCINOX MAMMOTH-HD 180° HINGE
6. CONCRETE POST FOOTING; REFER TO DETAIL (16 / -)
7. ASTRAGAL
8. TRIM HARDWARE: LEVER AND ANTI-VANDAL PULL (10 / -)
9. MCNICHOLS PERFORATED METAL, #16381216 48 HOLE SIZE: 3/8" DIA, ON 1/2" STAGGERED CENTERS; ATTACHED USING UNSLOTTED INDENTED HEX HEAD SELF-DRILLING SCREWS
10. 1/8" THICK KICK PLATE; MOUNT FLUSH AND WELD TO ALL GATE FRAME SURFACES ON THE PUSH SIDE OF GATE (09 / -)
11. FINISH GRADE

NOTES:
A. SUBMIT SHOP DRAWINGS FOR REVIEW PRIOR TO FABRICATION.
B. PROVIDE TWO PART URETHANE COATING SYSTEM FOR ALL GATE COMPONENT TO MATCH FENCE COLOR.
C. ALL WELDS TO BE GROUND SMOOTH AND CONTINUOUS, FREE OF BURS.

TUBE STEEL SINGLE SWING ACCESSIBLE GATE — 1/2" = 1'-0" — 04

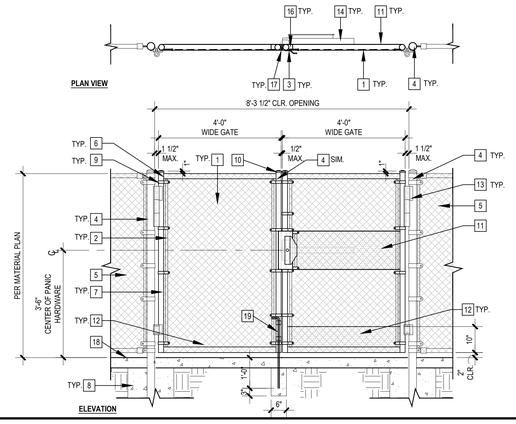

1. CHAIN LINK FENCE FABRIC; 2" , 9 GA.; ATTACH TO GATE TOP AND BOTTOM FRAME WITH RAIL TIE WIRE; COLOR PER MATERIALS PLAN KEYNOTE LEGEND
2. TENSION BAR; THREAD TENSION BAR TO CHAIN LINK & ATTACH TO GATE FRAME WITH TENSION BANDS; TYP.
3. TRIM HARDWARE: ANTI-VANDAL PULL
4. POST: 3-1/2" O.D. SCH. 40.; EACH SIDE OF GATE
5. CHAIN LINK FENCE; REFER TO DETAIL. (14 / 1L5.03)
6. ALL JOINTS WELDED CONTINUOUS TO MAKE A SOLID FRAME.
7. GATE FRAME: 1-7/8" O.D. SCH. 40
8. CONCRETE POST FOOTING; REFER TO DETAIL. (16 / -)
9. TENSION BAND
10. GATE FRAME POST CAP; MATCH FENCE POST CAP
11. PANIC BAR MOUNTING PLATE; 1/8" THICK; WELDED TO GATE FRAME ON THE PUSH SIDE (07 / 1L5.03)
12. KICK PLATE: 1/8" THICK; MOUNT FLUSH AND WELD TO ALL GATE FRAME SURFACES ON THE PUSH SIDE OF GATE (11 / 1L5.03)
13. SELF-CLOSING HYDRAULIC HINGE WITH CHAIN LINK BRACKET ADAPTER: ULTRA HEAVY LOCINOX MAMMOTH 180
14. PANIC BAR: MOUNTED ON PUSH SIDE OF GATE; (07 / 1L5.03)
15. TENSION BAND WELDED TO WELDABLE BOX
16. WELDABLE BOX
17. ASTRAGAL; REFER TO DETAIL (07 / 1L5.03)
18. FINISH GRADE.
19. CANE BOLT

NOTES:
A. SUBMIT SHOP DRAWINGS FOR REVIEW PRIOR TO FABRICATION.
B. ALL GATE COMPONENT TO MATCH FENCE FINISH.
C. ALL WELDS TO BE GROUND SMOOTH AND CONTINUOUS, FREE OF BURS.

NOT FOR DSA SS APPROVAL PER IR-A22

CHAIN LINK DOUBLE SWING GATE WITH ONE LEAF PANIC AND ANTI-VANDAL PULL HARDWARE — 1/2" = 1'-0" — 15

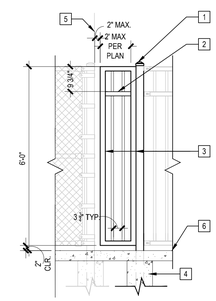

1. END POST PER (01 / -)
2. CHANNEL RAIL, BRACKET, & PICKET TO MATCH AMERISTAR
3. 2" SQ. X 12 GA. CANTILEVERED FENCE PANEL FRAME; WELD CONT. TO POST
4. END POST FOOTING; REFER TO DETAIL (16 / -)
5. EDGE OF EXIST. CHAIN LINK FENCE POST OR BLDG EDGE
6. FINISH GRADE

NOTES:
A. FENCE PANEL STYLE: AMERISTAR, MONTAGE II, MAJESTIC, 3-RAIL
B. ALL COMPONENTS ARE TO HAVE A SHOP APPLIED POWDER COAT FINISH. REFER TO KEYNOTE LEGEND FOR FINISH.
C. SUBMIT SHOP DRAWINGS FOR REVIEW AND APPROVAL PRIOR TO FABRICATION
D. VALUES SHOWN ARE NOMINAL AND NOT TO BE USED FOR INSTALLATION PURPOSES. SEE PRODUCT SPECIFICATION FOR INSTALLATION REQUIREMENTS.
E. EXEMPT FROM DSA SS AND FLS REVIEW AND APPROVAL PER DSA IR A-22

CANTILEVERED TUBE STEEL FENCE PANEL — 1/2"=1'-0" — 11

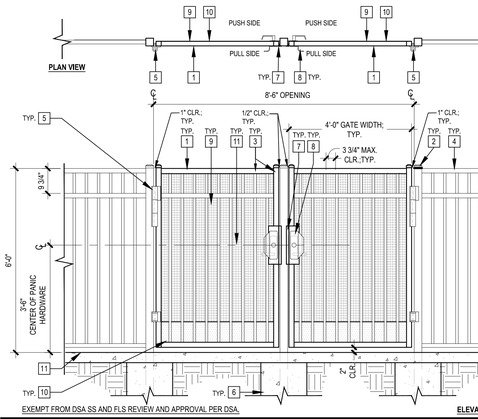

EXEMPT FROM DSA SS AND FLS REVIEW AND APPROVAL PER DSA.

1. GATE TO MATCH: AMERISTAR, MONTAGE II, MAJESTIC, 3-RAIL
2. END AND CENTER POST: 3" SQ., 12 GA; PROVIDE CAP PER MANUFACTURER
3. GATE FRAME: 2" SQ. X 12 GA.
4. ADJACENT TUBE STEEL FENCE (01 / -)
5. LOCINOX MAMMOTH-HD 180° HINGE
6. CONCRETE POST FOOTING; REFER TO DETAIL: (16 / -)
7. ASTRAGAL
8. TRIM HARDWARE: LEVER AND ANTI-VANDAL PULL (10 / -)
9. MCNICHOLS PERFORATED METAL, #16381216 48 HOLE SIZE: 3/8" DIA, ON 1/2" STAGGERED CENTERS; ATTACHED USING UNSLOTTED INDENTED HEX HEAD SELF-DRILLING SCREWS
10. 1/8" THICK KICK PLATE; MOUNT FLUSH AND WELD TO ALL GATE FRAME SURFACES ON THE PUSH SIDE OF GATE (09 / -)
11. FINISH GRADE (10 / -)

NOTES:
A. SUBMIT SHOP DRAWINGS FOR REVIEW PRIOR TO FABRICATION.
B. PROVIDE TWO PART URETHANE COATING SYSTEM FOR ALL GATE COMPONENT TO MATCH FENCE COLOR.
C. ALL WELDS TO BE GROUND SMOOTH AND CONTINUOUS, FREE OF BURS.

TUBE STEEL DOUBLE SWING ACCESSIBLE GATE — 1/2" = 1'-0" — 03

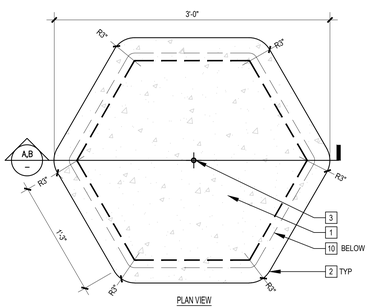

1. PRECAST CONCRETE HEXAGONAL STOOL, SEE SITE FURNISHINGS LEGEND FOR FINISH AND COLOR
2. 2" EASED EDGE RADIUS, TYP. ALL EDGES
3. 1/2" DIA F1554 - GR 36 FULLY THREADED ROD DOWEL @ 3'-0" O/C (MINIMUM (2) PER UNIT FOR TYPE A1, A2, C1, C2, AND D1, MINIMUM (1) PER UNIT FOR TYPE B1 AND B2) - EMBED NUT END 10" INTO PRECAST CONCRETE STOOL AS SHOWN (SEE 9)
4. #4 TIES W/ 135 DEGREE HOOKS @ 12" O/C
5. CONC. PAVING THICKENED EDGE (07 / 1L5.01)
6. PLANTING AREA
7. BASE MATERIAL AND COMPACTED SUBGRADE PER GEOTECHNICAL REPORT
8. (4) #5 CONT LONGITUDINAL BARS T&B W/ STD 90 DEGREE HOOK AT EA END, TYP.
9. CORE DRILL 3" DIA HOLE CENTERED IN FOOTING BELOW AND SET THREADED ROD USING HILTI HIT-RE 500V3 EPOXY PER ICC ESR-3814 - EMBED 6" INTO FOOTING (SEE 3)

NOTES:
A. REFER TO PLANS/ELEVATIONS FOR LOCATION OF JOINTS.

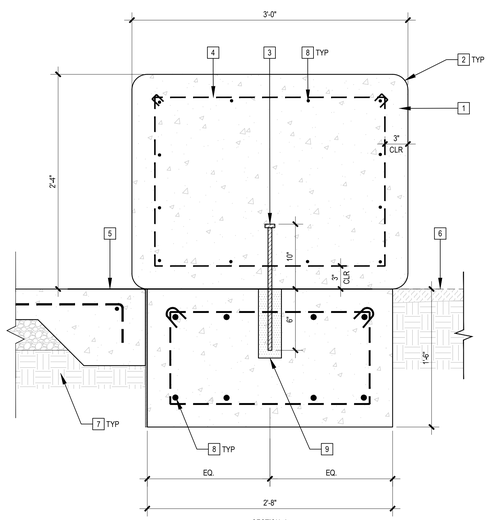

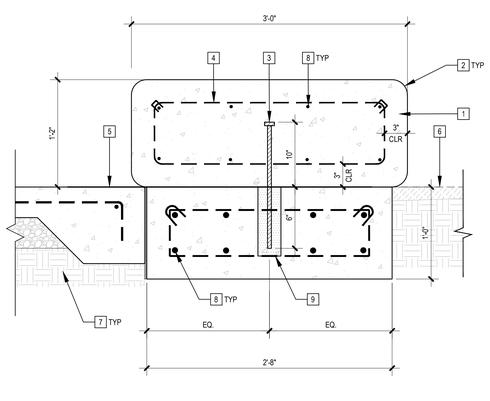

PRECAST CONC. STOOL — 1 1/2" = 1'-0" — 13

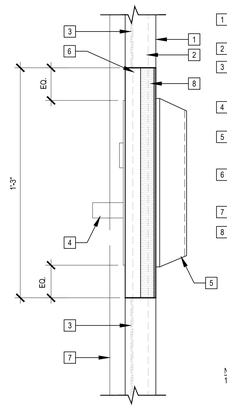

1. GATE FRAME; PER DTL. (03,04 / -)
2. GATE PICKET (BEYOND)
3. PERFORATED SHEET METAL; ATTACHED TO GATE PICKETS WITH SELF TAPPING SCREWS
4. LEVER HARDWARE: NIGHT LATCH VON DUPRIN, 996L-NL
5. ANTI-VANDAL PULL HARDWARE: IVES TRIMCO 1096HA
6. WELDABLE BOX: KEEDEX K-8XED-V990NL-2; WELDED TO GATE FRAME
7. GATE POST (BEYOND)
8. ASTRAGAL; 1/8" THK. GALV. STEEL ANGLE BAR ; WELDED TO GATE FRAME; PAINTED TO MATCH GATE

NOTE:
1. REFER TO GATE DETAIL FOR DIMENSION AND LOCATION OF HARDWARE FROM FINISH GRADE.

LEVER & ANTI-VANDAL PULL HARDWARE ENLARGEMENT — 3" = 1'-0" — 10

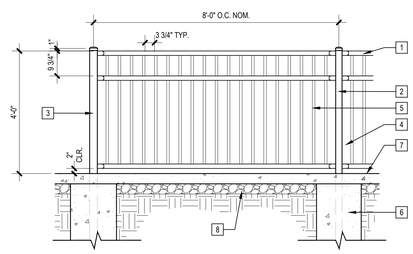

1. FENCE PANEL: AMERISTAR, MONTAGE II, MAJESTIC, 3-RAIL
2. MID-POST: 2-1/2" SQ. X 12 GA.; BY MANUFACTURER
3. END OR CORNER POST: 3" SQ. X 12 GA; BY MANUFACTURER
4. FLAT MOUNT BRACKET OR PLUS SWIVEL OR UNIVERSAL BOULEVARD BRACKET
5. 1" PICKET
6. CONCRETE POST CAISSON; REFER TO DTL. (16 / -)
7. FINISH SURFACE; PER MATERIALS PLAN
8. BASE MATERIAL & SUBGRADE

NOTES:
A. ALL COMPONENTS ARE TO HAVE A SHOP APPLIED POWDER COAT FINISH. REFER TO KEYNOTE LEGEND FOR FINISH,
B. SUBMIT SHOP DRAWINGS FOR REVIEW AND APPROVAL PRIOR TO FABRICATION
C. VALUES SHOWN ARE NOMINAL AND NOT TO BE USED FOR INSTALLATION PURPOSES. SEE PRODUCT SPECIFICATION FOR INSTALLATION REQUIREMENTS.

EXEMPT FROM DSA SS AND FLS REVIEW AND APPROVAL PER DSA.

TUBE STEEL FENCE - 4' HT — 1/2" = 1'-0" — 02

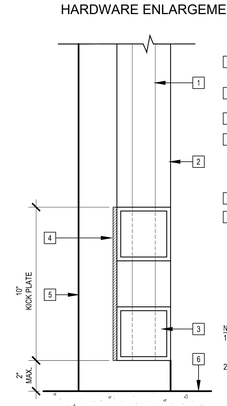

1. GATE PICKET PER MANUFACTURER
2. GATE FRAME; REFER TO DTL. (03, 04 / -)
3. GATE BOTTOM RAIL
4. 1/8" THICK KICK PLATE; MOUNT FLUSH AND CONTINUOUS WELD TO ALL SURFACES OF THE GATE FRAME ON THE PUSH SIDE OF GATE
5. FENCE POST BEYOND
6. FINISH GRADE

NOTES:
1. CLEAN ALL WELDS, GRIND SMOOTH, FREE OF BURS.
2. PROVIDE TWO PART URETHANE COATING SYSTEM TO MATCH GATE & FENCE COLOR.

TUBE STEEL GATE KICK PLATE — 3" = 1'-0" — 09

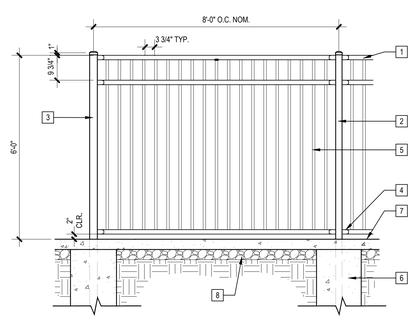

1. FENCE PANEL: AMERISTAR, MONTAGE II, MAJESTIC, 3-RAIL
2. MID-POST: 2-1/2" SQ. X 12 GA.; BY MANUFACTURER
3. END OR CORNER POST: 3" SQ. X 12 GA; BY MANUFACTURER
4. FLAT MOUNT BRACKET OR PLUS SWIVEL OR UNIVERSAL BOULEVARD BRACKET
5. 1" PICKET
6. CONCRETE POST CAISSON; REFER TO DTL. (16 / -)
7. FINISH SURFACE; PER MATERIALS PLAN
8. BASE MATERIAL & SUBGRADE

NOTES:
A. ALL COMPONENTS ARE TO HAVE A SHOP APPLIED POWDER COAT FINISH. REFER TO KEYNOTE LEGEND FOR FINISH,
B. SUBMIT SHOP DRAWINGS FOR REVIEW AND APPROVAL PRIOR TO FABRICATION
C. VALUES SHOWN ARE NOMINAL AND NOT TO BE USED FOR INSTALLATION PURPOSES. SEE PRODUCT SPECIFICATION FOR INSTALLATION REQUIREMENTS.

EXEMPT FROM DSA SS AND FLS REVIEW AND APPROVAL PER DSA.

TUBE STEEL FENCE - 6' HT — 1/2" = 1'-0" — 01

IDENTIFICATION STAMP
DIV. OF THE STATE ARCHITECT
APP: 02-123848 INC: 01
REVIEWED FOR
SS ☑ FLS ☑ ACS ☑
DATE: 05/21/2026

LPA

ARCHITECTURE ENGINEERING INTERIOR DESIGN
LANDSCAPE ARCHITECTURE PLANNING

949-261-1001 Office

LPADesignStudios.com

5301 California Avenue, Suite 100
Irvine, California 92617

LICENSED LANDSCAPE ARCHITECT
IAN DONISHIMO TOM
No. 5495
04/02/26
10/31/2026
RENEWAL DATE
STATE OF CALIFORNIA

This document and all other project documents, ideas, aesthetics and designs incorporated therein are instruments of service. All project documents are copyright protected, are the property of LPA, Inc. (LPA) and cannot be lawfully used in whole or in part for any project or purpose except as set forth in the contractual agreement between LPA and its Client. The unauthorized disclosure and/or use of the project documents (including the creation of derivative works), may give rise to liability for copyright infringement, unlawful disclosure, use or misappropriation of property rights held by LPA. The unauthorized use of the project documents will give rise to the recovery of monetary losses and damages including attorney fees and costs for which the unauthorized user will be held liable.
Project documents describe the design intent of the work and are not a representation of as-built or existing conditions. LPA is not responsible for any discrepancies between the project documents and the existing conditions.

© LPA, Inc.

ELKHORN ELEMENTARY SCHOOL
CAMPUS MODERNIZATION INCREMENT 1

10505 DAVIS ROAD, STOCKTON, CA 95290

Developed for
LODI UNIFIED SCHOOL DISTRICT

Revision	Date

Submittal	Date
100% SCHEMATIC DESIGN	08/29/2025
DSA SUBMITTAL	12/18/2025

Job Number	3194201
Checked By	AW, EW
Scale	AS NOTED

CONSTRUCTION DETAILS

1L5.02

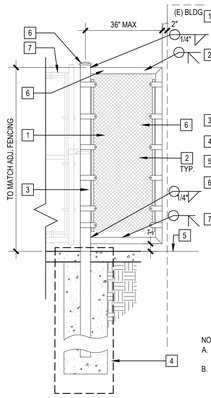

1. 2" SIZE, 9 GA. CHAIN LINK FABRIC REFER TO KEYNOTE LEGEND FOR COLOR
2. TENSION FLAT BAR. THREAD TENSION BAR TO CHAINLINK & ATTACH TO POST W/ TENSION CLIPS PER MANUFACTURER'S RECOMMENDATIONS. (EACH SIDE OF PANEL)
3. END POST WITH CAP
4. CONCRETE POST FOOTING PER 16/1L5.02
5. FINISH SURFACE
6. 2-3/8" DIA. TOP AND BOTTOM RAIL WELDED TO GATE POST AND 2-3/8" DIA. VERTICAL PIPE
7. ADJACENT FENCE 02/-

NOTES:
A. SUBMIT SHOP DRAWINGS TO LANDSCAPE ARCHITECT FOR REVIEW.
B. ALL WELDS TO BE GROUND SMOOTH AND CONTINUOUS

CANTILEVERED C.L. FENCE PANEL | 1/2" = 1'-0" | 24

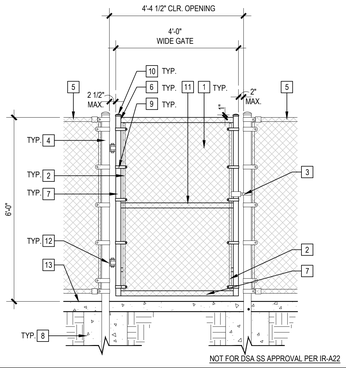

NOT FOR DSA SS APPROVAL PER IR-A22

1. CHAIN LINK FENCE FABRIC: 2" - 9 GA.; ATTACHE TO GATE TOP AND BOTTOM FRAME WITH RAIL TIE WIRE; COLOR PER MATERIALS PLAN KEYNOTE LEGEND
2. TENSION BAR; THREAD TENSION BAR TO CHAIN LINK & ATTACH TO GATE FRAME WITH TENSION BANDS; TYP.
3. FULCRUM LATCH; 3'-6" FROM FIN. GRADE 12/-
4. POST: 3-1/2" O.D. SCH. 40; EACH SIDE OF GATE
5. CHAIN LINK FENCE; REF ER TO DTL. 14/-
6. ALL JOINTS WELDED CONTINUOUS TO MAKE A SOLID FRAME.
7. GATE FRAME: 1-7/8" O.D. SCH. 40
8. CONCRETE POST FOOTING; REFER TO DTL. 16/1L5.02
9. TENSION BAND
10. GATE FRAME POST CAP TO MATCH FENCE POST CAP
11. MID FRAME OR RAIL; 1-7/8" O.D. SCH. 40
12. WELD-ON HINGE; C13000
13. FINISH GRADE.

NOTES:
A. SUBMIT SHOP DRAWINGS FOR REVIEW PRIOR TO FABRICATION.
B. ALL GATE COMPONENT TO MATCH FENCE COLOR AND FINISH.
C. ALL WELDS TO BE GROUND SMOOTH AND CONTINUOUS, FREE OF BURS.

CHAIN LINK SINGLE SWING GATE WITH FULCRUM LATCH HARDWARE | 1/2" = 1'-0" | 16

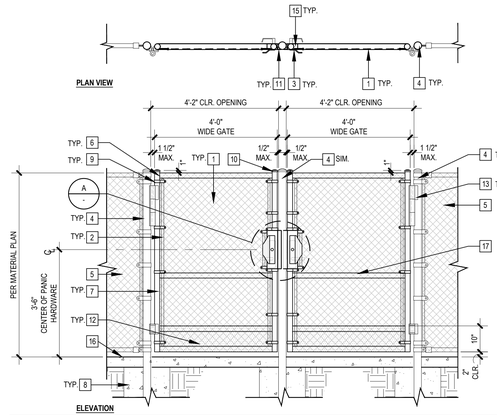

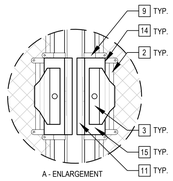

1. CHAIN LINK FENCE FABRIC: 2" - 9 GA.; ATTACH TO GATE TOP AND BOTTOM FRAME WITH RAIL TIE WIRE; COLOR PER MATERIALS PLAN KEYNOTE LEGEND
2. TENSION BAR; THREAD TENSION BAR TO CHAIN LINK & ATTACH TO GATE FRAME WITH TENSION BANDS; TYP.
3. TRIM HARDWARE: LEVER AND ANTI-VANDAL PULL
4. POST: 3-1/2" O.D. SCH. 40.; EACH SIDE OF GATE
5. CHAIN LINK FENCE; REFER TO DETAIL 14/-
6. ALL JOINTS WELDED CONTINUOUS TO MAKE A SOLID FRAME.
7. GATE FRAME: 1-7/8" O.D. SCH. 40
8. CONCRETE POST FOOTING; REFER TO DETAIL. 16/1L5.02
9. TENSION BAND
10. GATE FRAME POST CAP; MATCH FENCE POST CAP
11. ASTRAGAL; REFER TO DETAIL 12/1L5.04
12. KICK PLATE: 1/8" THICK; MOUNT FLUSH AND WELD TO ALL GATE FRAME SURFACES ON THE PUSH SIDE OF GATE 11/-
13. SELF-CLOSING HYDRAULIC HINGE WITH CHAIN LINK BRACKET ADAPTER; LOCINOX MAMMOTH 180
14. TENSION BAND WELDED TO WELDABLE BOX 12/1L5.04
15. WELDABLE BOX
16. FINISH GRADE.
17. INTERMEDIATE RAIL: 1-5/8" O.D. SCH. 40; WELDED TO GATE FRAME

NOTES:
A. SUBMIT SHOP DRAWINGS FOR REVIEW PRIOR TO FABRICATION.
B. ALL GATE COMPONENT TO MATCH FENCE FINISH.
C. ALL WELDS TO BE GROUND SMOOTH AND CONTINUOUS, FREE OF BURS.

NOT FOR DSA SS APPROVAL PER IR-A22

CHAIN LINK DOUBLE SWING ACCESSIBLE GATE | 1/2" = 1'-0" | 04

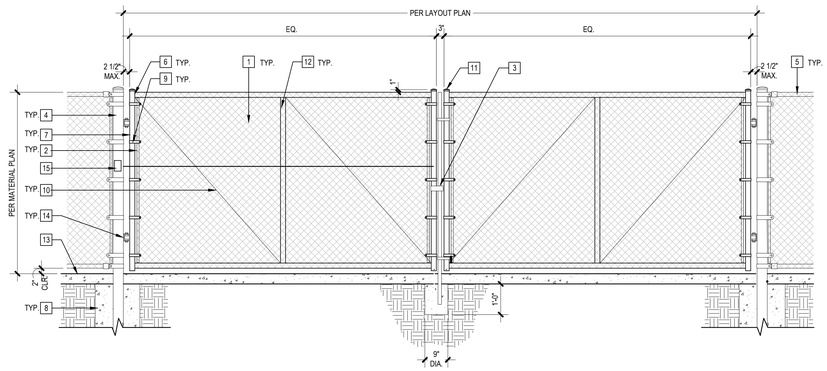

1. CHAIN LINK FENCE FABRIC: 2" - 9 GA.; ATTACHE TO GATE TOP AND BOTTOM FRAME WITH RAIL TIE WIRE; COLOR PER MATERIALS PLAN KEYNOTE LEGEND
2. TENSION BAR; THREAD TENSION BAR TO CHAIN LINK & ATTACH TO GATE FRAME WITH TENSION BANDS; TYP.
3. INDUSTRIAL DOUBLE GATE LATCH ASSEMBLY WITH 1-3/8" DIA. PLUNGER ROD WITH GALV. STEEL SLEEVE
4. POST: 4" O.D. SCH. 40; EACH SIDE OF GATE
5. CHAIN LINK FENCE; REFER TO DTL. 02/-
6. ALL JOINTS WELDED CONTINUOUS TO MAKE A SOLID FRAME.
7. GATE FRAME: 1-7/8" O.D. SCH. 40
8. CONCRETE POST FOOTING; REFER TO DTL. 16/1L5.02
9. TENSION BAND
10. TRUSS ROD WITH ADJUSTING TURNBUCKLE
11. GATE FRAME POST CAP TO MATCH FENCE POST CAP
12. MID FRAME: 1-7/8" O.D. SCH. 40
13. FINISH GRADE.
14. WELD-ON HINGE; C13000
15. POST MOUNTED KNOX BOX. 42" ABOVE FINISH SURFACE

NOTES:
A. SUBMIT SHOP DRAWINGS FOR REVIEW PRIOR TO FABRICATION.
B. ALL GATE COMPONENT TO MATCH FENCE COLOR AND FINISH.
C. ALL WELDS TO BE GROUND SMOOTH AND CONTINUOUS, FREE OF BURS.
D. EXEMPT FROM DSA SS AND FLS REVIEW AND APPROVAL PER DSA IR A-22

CHAIN LINK VEHICULAR GATE | 1/2" = 1'-0" | 15

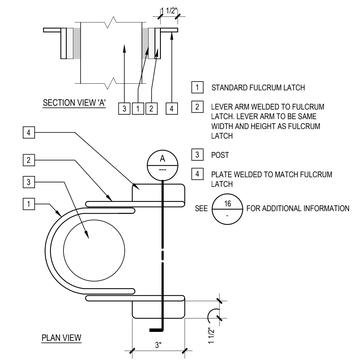

1. STANDARD FULCRUM LATCH
2. LEVER ARM WELDED TO FULCRUM LATCH. LEVER ARM TO BE SAME WIDTH AND HEIGHT AS FULCRUM LATCH
3. POST
4. PLATE WELDED TO MATCH FULCRUM LATCH

SEE 16/- FOR ADDITIONAL INFORMATION

MODIFIED FULCRUM LATCH | N.T.S. | 12

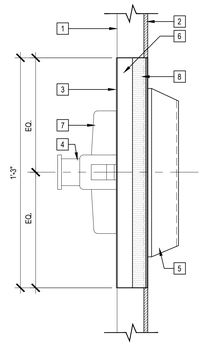

1. GATE FRAME
2. CHAIN LINK FABRIC; PULL SIDE OF GATE
3. PANIC BAR MOUNTING PLATE; 1/8" THICK; WELDED TO GATE FRAME ON THE PUSH SIDE
4. PANIC HARDWARE: CD-PL-XP-99-WH-626
5. ANTI-VANDAL PULL HANDLE TRIMCO 1096HA
6. WELDABLE BOX: KEEDEX K-BXED-V990NL-2
7. PANIC ASSEMBLY PER MANUFACTURER (BEYOND)
8. ASTRAGAL: 1/8" THK. GALV. STEEL ANGLE BAR ; WELDED TO GATE FRAME; PAINTED TO MATCH GATE

NOTE:
1. REFER TO GATE DETAIL FOR DIMENSION AND LOCATION OF HARDWARE FROM FINISH GRADE.

CHAIN LINK GATE PANIC & ANTI-VANDAL PULL HARDWARE | 3" = 1'-0" | 07

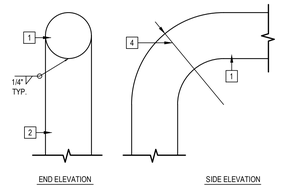

1. TOP RAIL
2. POST. WELDING OF POSTS TOGETHER SHALL NOT BE ACCEPTABLE
3. CONTINUOUS FILLET WELD BOTTOM ONLY
4. 3" RADIUS, TYP.

NOTE:
A. ROUND EXPOSED EDGES.
B. FOR RAIL TOP CONNECTION SEE 18/-

RAIL END CONNECTION | 6"=1'-0" | 03

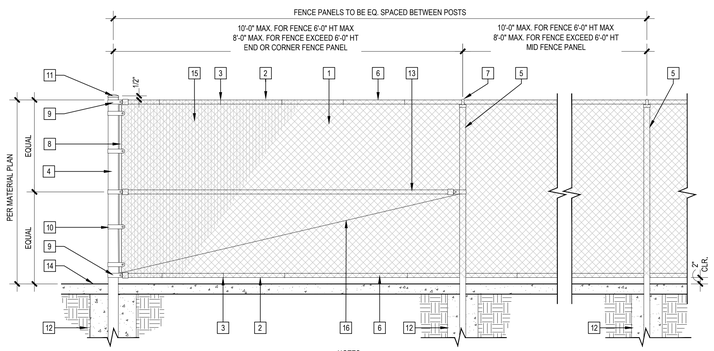

1. CHAIN LINK FENCE FABRIC: 2" - 9 GA. COLOR PER MATERIALS PLAN KEYNOTE LEGEND
2. TOP AND BOTTOM KNUCKLED SELVAGE CHAIN LINK FABRIC
3. RAIL TIE WIRE; ATTACH TO TOP AND BOTTOM RAIL SINGLE WRAP 9 GAUGE AT 18" O.C.; CHAIN LINK FABRIC TO BE ATTACHED BELOW TOP RAIL
4. CORNER OR END POST SCH. 40 : 2-7/8" O.D. FOR FENCE 6'-0" MAX; 4" O.D. FOR FENCE EXCEEDS 6'-0";
5. LINE POST: 2-3/8" O.D.; SCH. 40
6. TOP AND BOTTOM RAIL: 1-5/8" O.D.; SCH. 40
7. LINE POST LOOP CAP 17/-
8. TENSION BAR; THREAD TENSION BAR TO CHAIN LINK FABRIC & ATTACH TO END POST WITH TENSION BAND
9. BRACE BAND; TOP AND BOTTOM RAIL
10. TENSION BAND
11. POST CAP; REFER TO DTL. 17/-
12. POST FOOTINGS; REFER TO DTL. 16/1L5.02
13. MID RAIL AND BRACE BAND; END AND CORNER FENCE PANEL SECTION
14. FINISH SURFACE
15. POLYETHYLENE THERMOPLASTIC PRIVACY SLATS.INSTALLED PER MANUF. SEE NOTE ON MATERIAL PLAN FOR LOCATION AND COLOR
16. ADJUSTABLE TRUSS ROD SYSTEM AT END AND CORNER PANELS ONLY.FOR FENCE EXCEED 6'-0"

NOTES:
A. ALL FENCE COMPONENTS REFER TO DTL.
B. SUBMIT SHOP DRAWINGS FOR REVIEW PRIOR TO FABRICATION.
C. ALL FENCE COMPONENT FINISH TO MATCH CHAIN LINK FENCE FABRIC
D. EXEMPT FROM DSA SS AND FLS REVIEW AND APPROVAL PER DSA IR A-22

CHAIN LINK FENCE | 1/2" = 1'-0" | 14

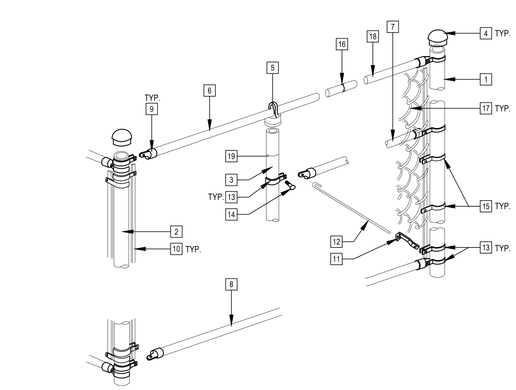

1. END POST
2. CORNER POST
3. LINE POST
4. POST CAP. SIZE TO MATCH POST
5. LOOP CAP
6. TOP RAIL
7. MID RAIL
8. BOTTOM RAIL
9. RAIL END
10. TENSION BAR
11. TURNBUCKLE
12. TRUSS ROD
13. BRACE BAND
14. BOLT & NUT
15. TENSION BAND
16. RAIL SLEEVE
17. CHAIN LINK FENCE FABRIC
18. RAIL TIE
19. LINE POST TIE

NOTES:
A. SUBMIT SHOP DRAWINGS TO LANDSCAPE ARCHITECT PRIOR TO INSTALLATION.
B. CONTRACTOR TO VERIFY ALL ATTACHMENTS/DIMENSIONS & INSTALL PER MFR. RECOMMENDATIONS.
C. ANY COMPONENT REQUIRED FOR A COMPLETE FENCE SYSTEM, BUT NOT SHOWN, SHOULD BE CONSIDERED A PART OF THESE DRAWING & INCLUDED IN THE FINAL INSTALLED SYSTEM.
D. USE SQUARE COMPONENTS WHERE OCCURS PER MATERIALS PLANS AND ELEVATIONS.

CHAIN LINK FENCE CONNECTIONS | 1 1/2" = 1'-0" | 17

SECTION A

CHAIN LINK GATE KICK PLATE | 6" = 1'-0" | 11

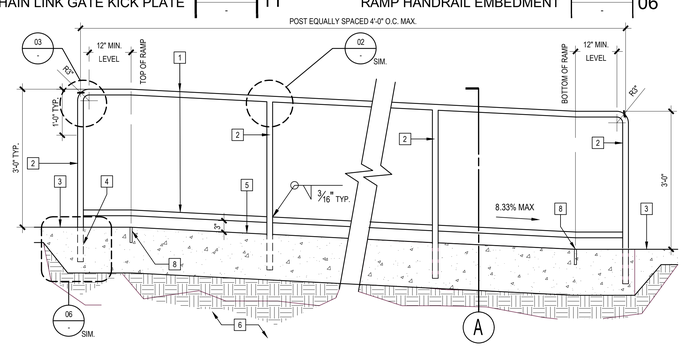

1. 1.66" O.D. GALVANIZED STEEL PIPE TOP AND BOTTOM RAIL.
2. 1.66" O.D. GALVANIZED STEEL POST
3. ADJACENT SURFACE PER MATERIALS PLAN
4. CAST IN PLACE, CORE DRILL, OR PROVIDE KNOCKOUT. SET POSTS W/ NON SHRINK GROUT.
5. CONCRETE RAMP
6. BASE MATERIAL AND COMPACTED SUBGRADE PER 01/L5.01
7. THICKENED EDGE
8. JOINT AT TOP OF RAMP/BOTTOM OF RAMP

NOTES:
A. ALL COMPONENTS OF HANDRAIL SYSTEM ARE TO BE 316 STAINLESS STEEL (MARINE GRADE) WITH SATIN FINISH.
B. GRIND ALL WELDS SMOOTH.
C. 1/8" EDGES TYPICAL ALL CORNERS.
D. COLD GALVANIZED ALL FIELD WELDS.
E. ALL HANDRAILS TO BE 3" MIN. FROM VERTICAL SURFACE UNLESS OTHERWISE NOTED ON PLAN.
F. PROVIDE HANDRAILS ON BOTH SIDES OF RAMP, TYPICAL
G. HANDRAILS SHALL BE AT A CONSISTENT HEIGHT ABOVE WALKING RAMP SURFACES

RAMP HANDRAIL EMBEDMENT | 1 1/2" = 1'-0" | 06

HANDRAIL AT RAMP | 3/4"=1'-0" | 01

IDENTIFICATION STAMP
DIV. OF THE STATE ARCHITECT
APP: 02-123848 INC: 01
REVIEWED FOR
SS ☑ FLS ☑ ACS ☑
DATE: 05/21/2026

LPA
ARCHITECTURE ENGINEERING INTERIOR DESIGN
LANDSCAPE ARCHITECTURE PLANNING
949-261-1001 Office
LPADesignStudios.com
5301 California Avenue, Suite 100
Irvine, California 92617

LICENSED LANDSCAPE ARCHITECT
04/02/26
10/31/2026
LICENSE EXPIRATION DATE
STATE OF CALIFORNIA

This document and all other project documents, ideas, aesthetics and designs incorporated therein are instruments of service. All project documents are copyright protected, are the property of LPA, Inc. (LPA) and cannot be lawfully used in whole or in part for any project or purpose except as set forth in the contractual agreement between LPA and its Client. The unauthorized disclosure and/or use of the project documents (including the creation of derivative works), may give rise to liability for copyright infringement, unlawful disclosure, use or misappropriation of property rights held by LPA. The unauthorized use of the project documents will give rise to the recovery of monetary losses and damages including attorney fees and costs for which the unauthorized user will be held liable.
Project documents describe the design intent of the work and are not a representation of as-built or existing conditions. LPA is not responsible for any discrepancies between the project documents and the existing conditions.

© LPA, Inc.

ELKHORN ELEMENTARY SCHOOL
CAMPUS MODERNIZATION INCREMENT 1

10505 DAVIS ROAD, STOCKTON, CA 95290

Developed for
LODI UNIFIED SCHOOL DISTRICT

Revision	Date

Submittal	Date
100% SCHEMATIC DESIGN	08/29/2025
DSA SUBMITTAL	12/18/2025

Job Number	3194201
Checked By	AW, EW
Scale	AS NOTED

CONSTRUCTION DETAILS

1L5.03

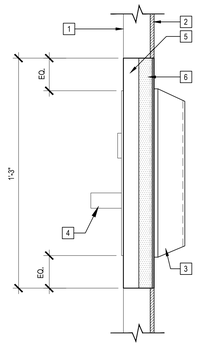

1 GATE FRAME

2 CHAIN LINK FABRIC; PULL SIDE OF GATE

3 ANTI-VANDAL PULL HANDLE TRIMCO 1096HA

4 LEVER HARDWARE: NIGHT LATCH VON DUPRIN, 996L-NL

5 WELDABLE BOX: KEEDEX K-BXED-V990NL-2

6 ASTRAGAL: 1/8" THK. GALV. STEEL ANGLE BAR ; WELDED TO GATE FRAME; PAINTED TO MATCH GATE

NOTE:
1. REFER TO GATE DETAIL FOR DIMENSION AND LOCATION OF HARDWARE FROM FINISH GRADE.

CHAIN LINK GATE LEVER & ANTI-VANDAL PULL HARDWARE | 3" = 1'-0" | - | 12

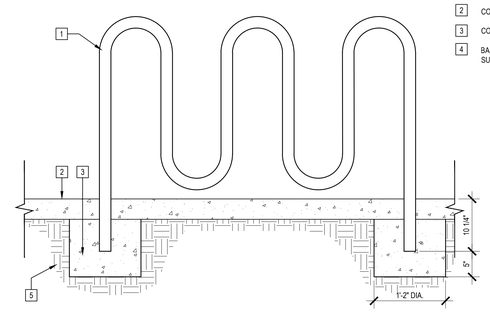

1 BIKE RACK, COLOR AND FINISH PER SITE FURNISHINGS LEGEND ON 1L0.01.

2 CONCRETE PAVING PER MATERIALS PLAN.

3 CONCRETE FOOTING.

4 BASE MATERIAL AND COMPACTED SUBGRADE PER 01 / 1L5.01

BIKE RACK FOOTING | 1" = 1'-0" | - | 04

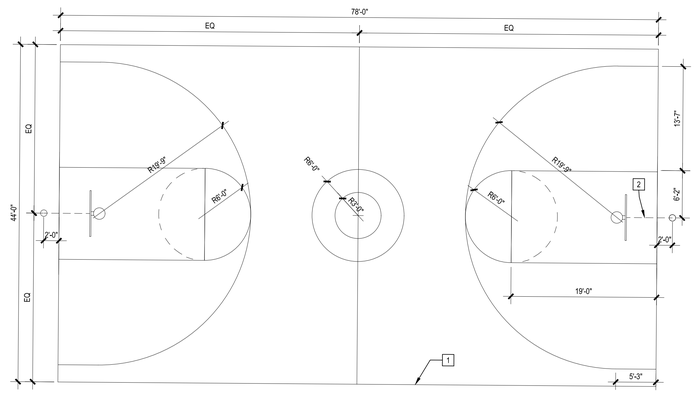

STRIPING NOTES:
A. 2 " WHITE STRIPING - TYPICAL FOR ALL PAINTED COURTS ON A/C.
B. STRIPING DIMENSIONS REFER TO THE CENTER LINE LINE OF THE 2" STRIPE.
C. SEE LAYOUT PLAN FOR DATUM COORDINATES
D. CONTRACTOR TO PROVIDE SHOP DRAWINGS OF STENCILS USED FOR APPROVAL FROM LANDSCAPE ARCHITECT
E. SEE SHEET 1L3.01 FOR ADDITIONAL GRAPHIC AND COLOR LAYOUT

1 PAINT 2" WHITE STRIPING AS SHOWN, REFER TO SPEC.

2 BASKETBALL POLE AND BACKBOARD 09 / -

BASKETBALL COURT- TYPE 1 | 1/8" = 1'-0" | SAME | 11

1 A.C. PAVING; REFER TO CIVIL DWG.

2 VOLLEYBALL POST. REFER TO SITE FURNISHINGS LEGEND ON 1L0.01 FOR MORE INFO.

3 GAME POST GROUND SLEEVE. REFER TO SITE FURNISHINGS LEGEND ON 1L0.01 FOR MORE INFO.

4 CONCRETE CAISSON

5 SUBGRADE PER GEOTECHNICAL REPORT

6 (6) #6 VERTICAL BARS

7 #4 TIE (3 TIES WITHIN FIRST 5" AND 12" O/C AT REMAINDER). 1 ST TIE 1 1/2" FROM TOP OF CONCRETE

NOTES:
1. VERIFY ALL DIMENSIONS AND COMPONENTS WITH MANUFACTURER PRIOR TO BID AND INSTALLATION.
2. VERIFY FINAL HEIGHT OF VOLLEYBALL POST WITH MANUFACTURER PRIOR TO SETTING POST.
3. ALL COMPONENTS TO BE HOT-DIPPED GALVANIZED AND FACTORY PAINTED
4. FOR VOLLEYBALL COURT LAYOUT, SEE 02 / -
5. DSA SS REVIEW IS NOT REQUIRED PER IR A-22

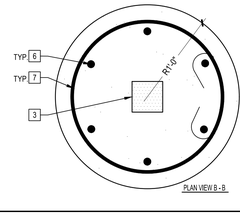

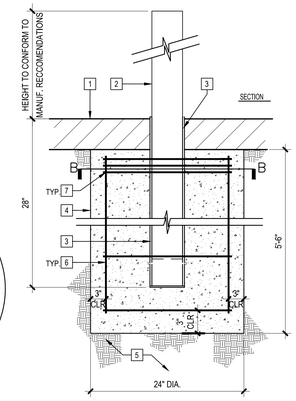

VOLLEYBALL POST SLEEVE FOOTING | 1 1/2"=1'-0" | - | 03

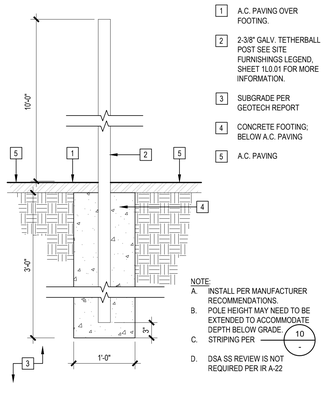

1 A.C. PAVING OVER FOOTING.

2 2-3/8" GALV. TETHERBALL POST SEE SITE FURNISHINGS LEGEND, SHEET 1L0.01 FOR MORE INFORMATION.

3 SUBGRADE PER GEOTECH REPORT

4 CONCRETE FOOTING; BELOW A.C. PAVING

5 A.C. PAVING

NOTE:
A. INSTALL PER MANUFACTURER RECOMMENDATIONS.
B. POLE HEIGHT MAY NEED TO BE EXTENDED TO ACCOMMODATE DEPTH BELOW GRADE.
C. STRIPING PER 10 / -
D. DSA SS REVIEW IS NOT REQUIRED PER IR A-22

TETHERBALL POST & FOOTING | 1" = 1'-0" | 14

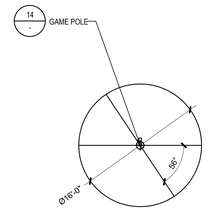

STRIPING NOTES:
A. 2 " STRIPING - TYPICAL FOR ALL PAINTED COURTS ON A/C.
B. STRIPING DIMENSIONS REFER TO THE CENTER LINE LINE OF 2" STRIPE.
C. SEE LAYOUT PLAN FOR DATUM COORDINATES.
D. SEE SHEET 1L3.01 FOR GRAPHIC AND COLOR LAYOUT.
E. USE 2 COATS OF PAINT AS PER SPECIFICATIONS.

TETHERBALL COURT STRIPING | 1/8"=1'-0" | SAME | 10

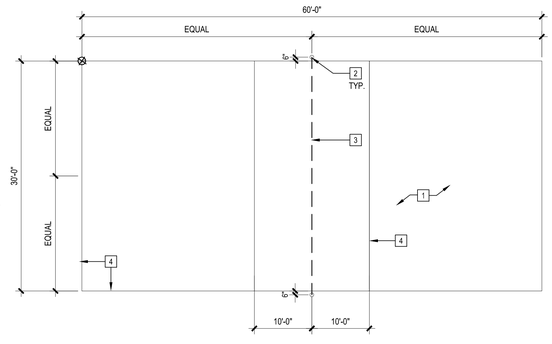

1 A.C. PAVING

2 REMOVABLE VOLLEYBALL NET POST PER 03 / -

3 NET, SEE PLAY EQUIPMENT LEGEND ON 1L0.01

4 STRIPING

STRIPING NOTES:
A. 2 " STRIPING - TYPICAL FOR ALL PAINTED COURTS ON A/C. COLOR YELLOW
B. STRIPING DIMENSIONS REFER TO THE CENTER LINE LINE OF THE 2" STRIPE.
C. SEE LAYOUT PLAN FOR DATUM COORDINATES
D. CONTRACTOR TO PROVIDE SHOP DRAWINGS OF STENCILS USED FOR APPROVAL FROM LANDSCAPE ARCHITECT

VOLLEYBALL COURT LAYOUT | 1/8"=1'-0" | - | 02

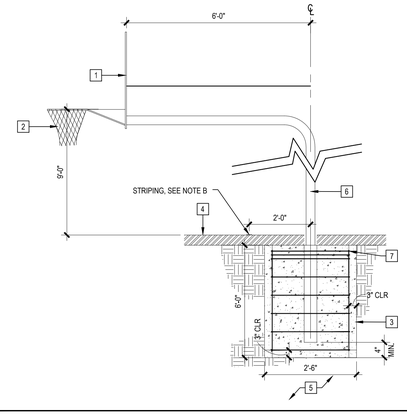

1 CAST ALUMINUM BACKBOARD. FOR ADDITIONAL INFORMATION REFER TO SITE FURNISHINGS LEGEND 1L0.01

2 HEAVY DUTY DOUBLE RIM GOAL W/MOUNTING HARDWARE & NET.

3 CONCRETE FOOTING

4 AC PAVING PER CIVIL PLAN

5 SUBGRADE PER GEOTECHNICAL REPORT

6 3 1/2" EXTRA STRONG GOOSENECK POLE STYLE WITH 6'-0" EXTENSION.

7 (8) #6 VERTICAL REBARS WITH #4 TIES @ 12" O.C. LOCATE FIRST (3) TIES WITHIN 5" OF TOP OF CASSION

NOTES:
A. ALL COMPONENTS ARE PER THE MANUFACTURER'S RECOMMENDATIONS. CONTRACTOR IS TO VERIFY ALL MODEL #'S TO MATCH WRITTEN DESCRIPTION & FOR DUPLICATION. INSTALL PER MANUFACTURER'S RECOMMENDATIONS.
B. COURT STRIPING PER 11 / -
C. DSA SS REVIEW IS NOT REQUIRED PER IR A-22

BASKETBALL POLE & BACKBOARD ASSEMBLY | 1/2"=1'-0" | SAME | 09

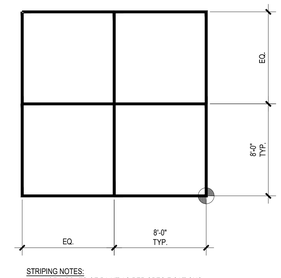

STRIPING NOTES:
A. USE 2 COATS OF PAINT AS PER SPECIFICATIONS.
B. STRIPING DIMENSIONS REFER TO THE CENTER LINE OF THE 2" STRIPE.
C. 2" STRIPING-TYPICAL FOR ALL PAINTED COURTS ON CONCRETE AND A/C.
D. SEE SHEET 1L3.01 FOR GRAPHIC AND COLOR LAYOUT.

FOUR SQUARE STRIPING | 1/4" = 1'-0" | SAME | 01

IDENTIFICATION STAMP
DIV. OF THE STATE ARCHITECT
APP: 02-123848 INC: 01
REVIEWED FOR
SS ☑ FLS ☑ ACS ☑
DATE: 05/21/2026

LPA

ARCHITECTURE ENGINEERING INTERIOR DESIGN
LANDSCAPE ARCHITECTURE PLANNING

949-261-1001 Office

LPADesignStudios.com

5301 California Avenue, Suite 100
Irvine, California 92617

REGISTERED LANDSCAPE ARCHITECT
04/02/26
10/31/2026
RENEWAL DATE
STATE OF CALIFORNIA

This document and all other project documents, ideas, aesthetics and designs incorporated therein are instruments of service. All project documents are copyright protected, are the property of LPA, Inc. (LPA) and cannot be lawfully used in whole or in part for any project or purpose except as set forth in the contractual agreement between LPA and its Client. The unauthorized disclosure and/or use of the project documents (including the creation of derivative works), may give rise to liability for copyright infringement, unlawful disclosure, use or misappropriation of property rights held by LPA. The unauthorized use of the project documents will give rise to the recovery of monetary losses and damages including attorney fees and costs for which the unauthorized user will be held liable.
Project documents describe the design intent of the work and are not a representation of as-built or existing conditions. LPA is not responsible for any discrepancies between the project documents and the existing conditions.

© LPA, Inc.

ELKHORN ELEMENTARY SCHOOL
CAMPUS MODERNIZATION INCREMENT 1

10505 DAVIS ROAD, STOCKTON, CA 95290

Developed for
LODI UNIFIED SCHOOL DISTRICT

Revision	Date

Submittal	Date
100% SCHEMATIC DESIGN	08/29/2025
DSA SUBMITTAL	12/18/2025

Job Number	3194201
Checked By	AW, EW
Scale	AS NOTED

CONSTRUCTION DETAILS

1L5.04

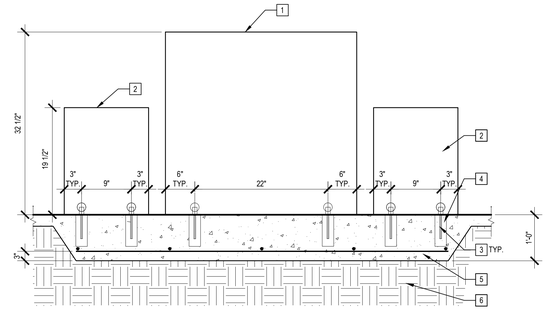

1. TABLE PER SITE FURNISHING LEGEND
2. BENCH PER SITE FURNISHINGS LEGEND
3. 1/2" DIA. C.I.P. ANCHOR BOLT W/ 3" EMBED
4. 3"DIA. X 5" DP. GROUT POCKET (NON-SHRINK GROUT BY OTHERS)
5. THICKEN PAVING. PROVIDE BOTTOM LAYER OF REINFORCEMENT MATCHING TYPICAL PAVING REINFORCEMENT
6. SUBGRADE PER GEOTECH REPORT

CONCRETE TABLE AND BENCH MANUFACTURER'S INSTALLATION DETAIL | N.T.S. - | 12

- INSTALLATION IS REQUIRED BY OTHERS.
- ALL EDGES TO BE EASED.
- MANUFACTURING TOLERANCE ±1/4".
- PRODUCT: BENCH ONLY (QS-TD90PT/72B)
- QUANTITY: 2
- CONCRETE COLOR: NATURAL
- CONCRETE TEXTURE: ACID ETCH
- SEALER: TRIPLE GLOSS SEALER
- ALL LOOSE HARDWARE SUPPLIED & INSTALLED BY OTHERS
- ANCHORING METHOD BY OTHERS

APROX. WT. 452 LBS.
(CUSTOMER TO OFFLOAD IF OVER 6000 Lbs.)

REV. 9/8/17 M.M. △1

Authorized Signature _____ Date _____
By signing above or stamping this drawing "approved" or "no exception taken" authorization is given to Quick Crete to produce this drawing as shown within a 1/4" tolerance.

NOTE:
ANCHORING REQUIRED AS SHOWN IN DETAIL "A" ON SHEET 5

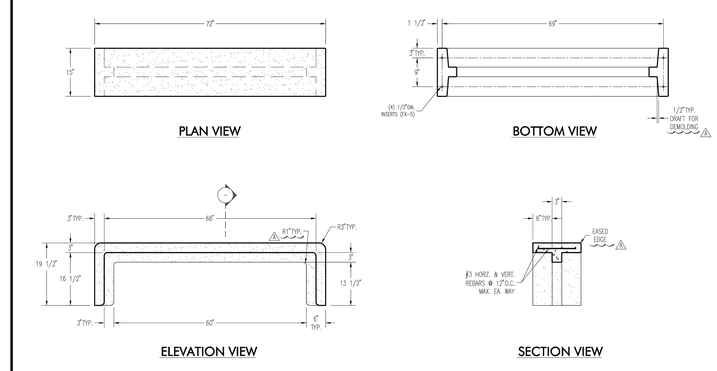

PLAN TYPE:	CONSTRUCTION PLAN
PRODUCT:	BENCH ONLY (QS-TD90PT/72B)
PROJECT NAME:	HERON K-8 SCHOOL CLASSROOM
DATE: 10/29/25	FILE NO. 126984-4
SCALE: 3/4" = 1'	DRAWN BY: M.L.
PC. NO. HB3	QC ITEM NO. 3
SHEET 4	OF 7

QCP Quick Crete Products Corp. (951) 737-6240 WWW.QUICKCRETE.COM

- INSTALLATION IS REQUIRED BY OTHERS.
- ALL EDGES TO BE EASED.
- MANUFACTURING TOLERANCE ±1/4".
- PRODUCT: CUSTOM TABLE
- QUANTITY: 1
- CONCRETE COLOR: NATURAL
- CONCRETE TEXTURE: ACID ETCH
- SEALER: TRIPLE GLOSS SEALER
- ALL LOOSE HARDWARE SUPPLIED & INSTALLED BY OTHERS
- ANCHORING METHOD BY OTHERS

APROX. WT. 2,796 LBS.
(CUSTOMER TO OFFLOAD IF OVER 6000 Lbs.)

REV. 9/8/17 M.M. △1

Authorized Signature _____ Date _____
By signing above or stamping this drawing "approved" or "no exception taken" authorization is given to Quick Crete to produce this drawing as shown within a 1/4" tolerance.

NOTE:
ANCHORING REQUIRED AS SHOWN IN DETAIL "A" ON SHEET 5

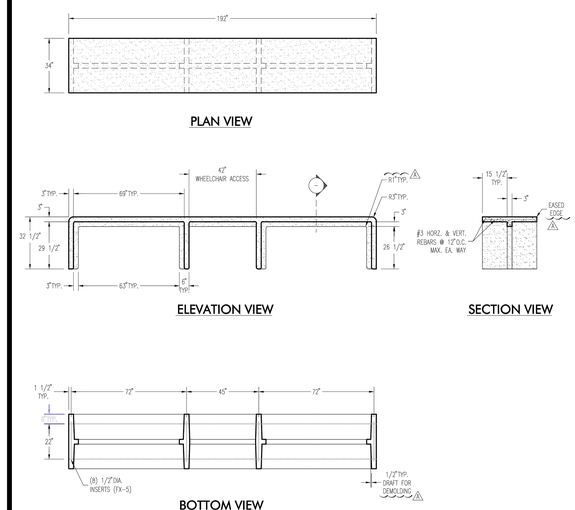

PLAN TYPE:	PLAN-TYPE
PRODUCT:	PRODUCT-NAME-NUMBER
PROJECT NAME:	PROJECT-NAME
DATE:	TODAYS-DATE
SCALE:	SCALE
PC. NO.	PC#
FILE NO.	FILE-NUMBER
DRAWN BY:	DRAWN-BY
QC ITEM NO.	QC-PC-#
SHEET	88
OF	88

QCP Quick Crete Products Corp. (951) 737-6240 WWW.QUICKCRETE.COM

REV. 9/8/17 M.M. △1 NO CHANGES

Authorized Signature _____ Date _____
By signing above or stamping this drawing "approved" or "no exception taken" authorization is given to Quick Crete to produce this drawing as shown within a 1/4" tolerance.

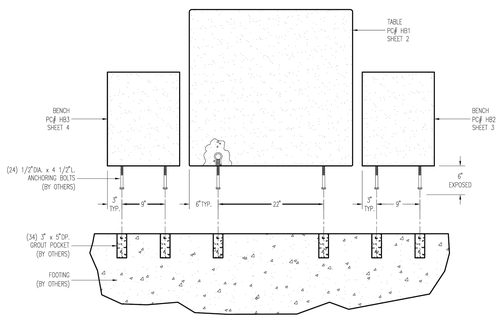

DETAIL "A"
INSTALLATION PLAN

PLAN TYPE:	INSTALLATION PLAN	DATE: 10/29/25	FILE NO. 126984-5
PRODUCT:	STRAIGTH TABLE AND BENCHES	SCALE: 3/4" = 1'	DRAWN BY: M.L.
PROJECT NAME:	HERON K-8 SCHOOL CLASSROOM	PC. NO.	QC ITEM NO.
SHEET 5	OF 7		

QCP Quick Crete Products Corp. (951) 737-6240 WWW.QUICKCRETE.COM

- INSTALLATION IS REQUIRED BY OTHERS.
- ALL EDGES TO BE EASED.
- MANUFACTURING TOLERANCE ±1/4".
- PRODUCT: CUSTOM BENCH
- QUANTITY: 1
- CONCRETE COLOR: NATURAL
- CONCRETE TEXTURE: ACID ETCH
- SEALER: TRIPLE GLOSS SEALER
- ALL LOOSE HARDWARE SUPPLIED & INSTALLED BY OTHERS
- ANCHORING METHOD BY OTHERS

APROX. WT. 1,045 LBS.
(CUSTOMER TO OFFLOAD IF OVER 6000 Lbs.)

REV. 9/8/17 M.M. △1

Authorized Signature _____ Date _____
By signing above or stamping this drawing "approved" or "no exception taken" authorization is given to Quick Crete to produce this drawing as shown within a 1/4" tolerance.

NOTE:
ANCHORING REQUIRED AS SHOWN IN DETAIL "A" ON SHEET 5

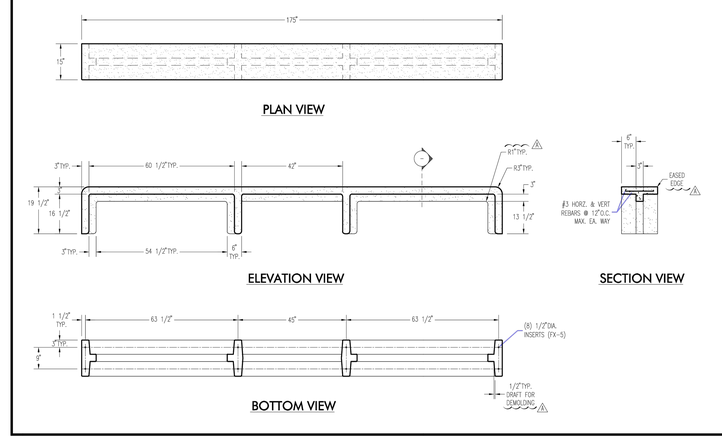

PLAN TYPE:	CONSTRUCTION PLAN
PRODUCT:	CUSTOM BENCH
PROJECT NAME:	HERON K-8 SCHOOL CLASSROOM
DATE: 10/29/25	FILE NO. 126984-3
SCALE: 3/8" = 1'	DRAWN BY: M.L.
PC. NO. HB2	QC ITEM NO. 2
SHEET 3	OF 7

QCP Quick Crete Products Corp. (951) 737-6240 WWW.QUICKCRETE.COM

QTY.: 1

REV. 9/8/17 M.M. △1 NO CHANGES

NOTE:
ANCHORING REQUIRED AS SHOWN IN DETAIL "A".

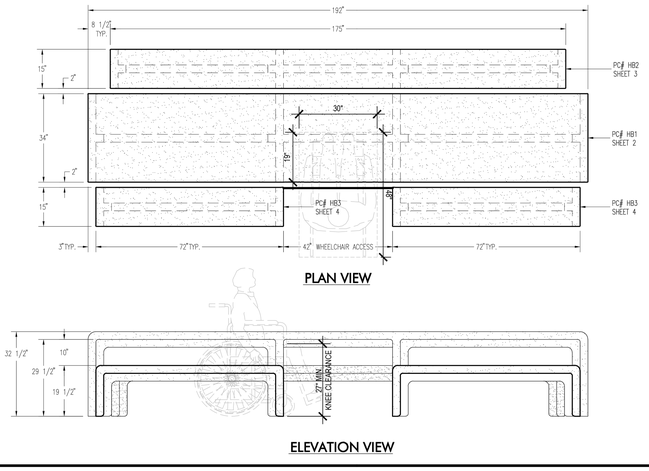

PLAN TYPE:	LAYOUT PLAN
PRODUCT:	STRAIGHT TABLE AND BENCHES
PROJECT NAME:	HERON K-8 SCHOOL CLASSROOM
DATE: 10/29/25	FILE NO. 126984-1
SCALE: 3/32" = 1'	DRAWN BY: M.L.
PC. NO.	QC ITEM NO.
SHEET 1	OF 7

QCP Quick Crete Products Corp. (951) 737-6240 WWW.QUICKCRETE.COM

PRECAST CONCRETE WORK TABLE | N.T.S. | 01

IDENTIFICATION STAMP
DIV. OF THE STATE ARCHITECT
APP: 02-123848 INC: 01
REVIEWED FOR
SS ☑ FLS ☑ ACS ☑
DATE: 05/21/2026

LPA

ARCHITECTURE ENGINEERING INTERIOR DESIGN
LANDSCAPE ARCHITECTURE PLANNING

949-261-1001 Office

LPADesignStudios.com

5301 California Avenue, Suite 100
Irvine, California 92617

LICENSED LANDSCAPE ARCHITECT
NICHOLAS DIMITO CHAPPELL
04/02/26
10/31/2026
RENEWAL DATE
STATE OF CALIFORNIA

This document and all other project documents, ideas, aesthetics and designs incorporated therein are instruments of service. All project documents are copyright protected, are the property of LPA, Inc. (LPA) and cannot be lawfully used in whole or in part for any project or purpose except as set forth in the contractual agreement between LPA and its Client. The unauthorized disclosure and/or use of the project documents (including the creation of derivative works), may give rise to liability for copyright infringement, unlawful disclosure, use or misappropriation of property rights held by LPA. The unauthorized use of the project documents will give rise to the recovery of monetary losses and damages including attorney fees and costs for which the unauthorized user will be held liable.
Project documents describe the design intent of the work and are not a representation of as-built or existing conditions. LPA is not responsible for any discrepancies between the project documents and the existing conditions.

© LPA, Inc.

ELKHORN ELEMENTARY SCHOOL
CAMPUS MODERNIZATION INCREMENT 1

10505 DAVIS ROAD, STOCKTON, CA 95290

Developed for
LODI UNIFIED SCHOOL DISTRICT

Revision	Date

Submittal	Date
100% SCHEMATIC DESIGN	08/29/2025
DSA SUBMITTAL	12/18/2025

Job Number	3194201
Checked By	AW, EW
Scale	AS NOTED

CONSTRUCTION DETAILS

1L5.05

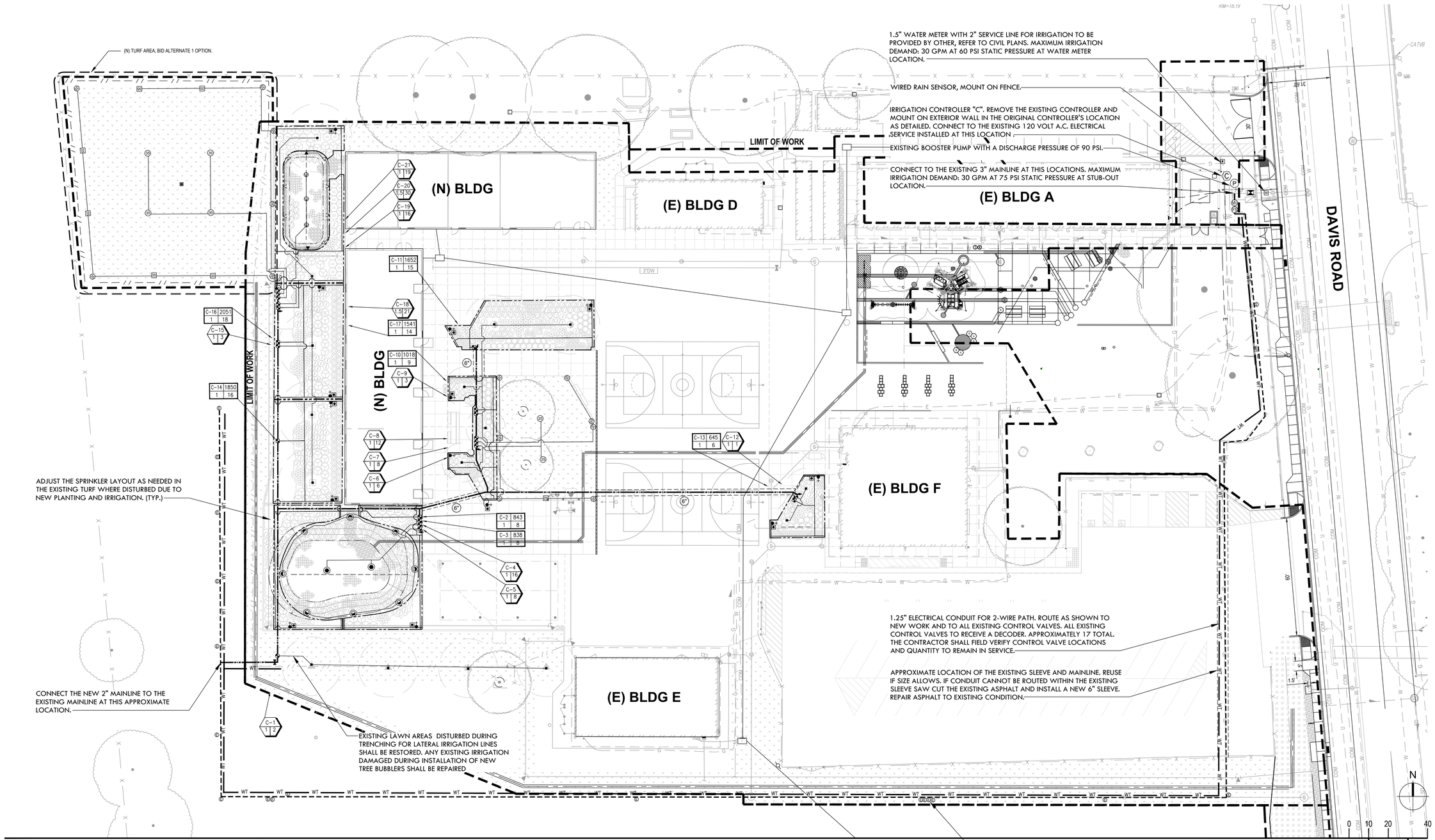

IRRIGATION PLAN 1" = 20'-0" 02

NOTES:

1. ONE BUBBLER SYMBOL IS SHOWN AT TREES FOR GRAPHIC CLARITY ONLY. INSTALL MINIMUM TWO BUBBLERS AT EACH TREE. INSTALL REQUIRED NUMBER OF BUBBLERS AS DETAILED.
2. IRRIGATION EQUIPMENT MAY BE SHOWN WITHIN HARDSCAPE FOR GRAPHIC CLARITY ONLY. INSTALL ALL IRRIGATION EQUIPMENT WITHIN PLANTED AREAS. IRRIGATION PIPE AND WIRE CROSSING BENEATH HARDSCAPE SURFACES SHALL BE CONTAINED WITHIN SLEEVING OR SCHEDULE 40 PVC CONDUIT. SLEEVING SIZE SHALL BE A MINIMUM OF TWO TIMES THE AGGREGATE DIAMETER OF ALL PIPES CONTAINED WITH SLEEVE. PROVIDE VERTICAL SWEEP FOR ALL ELECTRICAL CONDUIT ON EACH SIDE OF HARDSCAPE AND TERMINATE ENDS AT 12" MINIMUM DEPTH AND 12" FROM HARDSCAPE SURFACE.
3. UNSIZED LATERAL LINE PIPING LOCATED DOWN STREAM OF 1" PIPING SHALL BE 3/4" IN SIZE (TYPICAL).
4. SIZING OF LATERAL PIPE SHALL BE AS FOLLOWS:

0.75"	0-6 GPM
1"	7-12 GPM
1.25"	13-20 GPM
1.5"	21-32 GPM
2"	33-50 GPM
2.5"	51-70 GPM
3"	71-110 GPM

5. SIZING OF LATERAL PIPE FOR DRIPLINE (12" O.C. GRID WITH 0.6 GPH OR LESS EMITTERS) SHALL BE AS FOLLOWS:

0.75	0-500 FT
1"	501-1100 FT
1.25"	1101-2000 FT
1.5"	2001-3000 FT

EXISTING IRRIGATION NOTES:

1. EXISTING IRRIGATION IS SHOWN FOR REFERENCE ONLY TAKEN FROM IRRIGATION AS-BUILD PLANS AND/OR SITE VISIT. EXACT ROUTING OF IRRIGATION MAINLINE, WIRES, LOCATION OF REMOTE CONTROL VALVES, AND IRRIGATED AREAS SHOULD BE INVESTIGATED PRIOR TO CONSTRUCTION. CONTRACTOR WILL NEED TO FIELD VERIFY THE LOCATION OF ALL EXISTING IRRIGATION EQUIPMENT AND THE WORKING CONDITIONS PRIOR OF CONSTRUCTION. CONTRACTOR TO NOTIFY LANDSCAPE ARCHITECT IF THERE ARE ANY PROBLEMS PRIOR TO CONSTRUCTION.
2. CONTRACTOR IS RESPONSIBLE TO KEEP ALL EXISTING PLANTING AREAS (TO REMAIN) WITH WATER AT ALL TIMES DURING CONSTRUCTION. THIS SHALL INCLUDE PROVIDING TEMPORARY WATER SOURCE AND TEMPORARY IRRIGATION DURING CONSTRUCTION.

Irrigation Consultant:
Russell D. Mitchell Associates, Inc.
2760 Camino Diablo
Walnut Creek, CA 94597
tel 925.939.3985 ♦ fax 925.932.5671
www.rmairrigation.com

IDENTIFICATION STAMP
DIV. OF THE STATE ARCHITECT
APP: 02-123848 INC: 01
REVIEWED FOR
SS ☑ FLS ☑ ACS ☑
DATE: 05/21/2026

LPA
ARCHITECTURE ENGINEERING INTERIOR DESIGN
LANDSCAPE ARCHITECTURE PLANNING
949-261-1001 Office
LPADesignStudios.com
5301 California Avenue, Suite 100
Irvine, California 92617

LICENSED LANDSCAPE ARCHITECT
ALI ZOMORRODIAN-SHIMOTOMAI
04/02/26
10/31/2026
ORIGINAL DATE
STATE OF CALIFORNIA

This document and all other project documents, ideas, aesthetics and designs incorporated therein are instruments of service. All project documents are copyright protected, are the property of LPA, Inc. (LPA) and cannot be lawfully used in whole or in part for any project or purpose except as set forth in the contractual agreement between LPA and its Client. The unauthorized disclosure and/or use of the project documents (including the creation of derivative works), may give rise to liability for copyright infringement, unlawful disclosure, use or misappropriation of property rights held by LPA. The unauthorized use of the project documents will give rise to the recovery of monetary losses and damages including attorney fees and costs for which th unauthorized user will be held liable.
Project documents describe the design intent of the work and are not a representation of as-built or existing conditions. LPA is not responsible for any discrepancies between the project documents and the existing conditions.

© LPA, Inc.

ELKHORN ELEMENTARY SCHOOL
CAMPUS MODERNIZATION INCREMENT 1

10505 DAVIS ROAD, STOCKTON, CA 95290

Developed for
LODI UNIFIED SCHOOL DISTRICT

Revision	Date

Submittal	Date
100% SCHEMATIC DESIGN	08/29/2025
DSA SUBMITTAL	12/18/2025

Job Number	3194201
Checked By	AW, EW
Scale	AS NOTED

IRRIGATION PLAN

1L6.01

IRRIGATION NOTES

1. THESE IRRIGATION DRAWINGS ARE DIAGRAMMATIC AND INDICATIVE OF THE WORK TO BE INSTALLED. ALL PIPING, VALVES, AND OTHER IRRIGATION COMPONENTS MAY BE SHOWN WITHIN PAVED AREAS FOR GRAPHIC CLARITY ONLY AND ARE TO BE INSTALLED WITHIN PLANTING AREAS. DUE TO THE SCALE OF THE DRAWINGS, IT IS NOT POSSIBLE TO INDICATE ALL OFFSETS, FITTINGS, SLEEVES, CONDUIT, AND OTHER ITEMS WHICH MAY BE REQUIRED. INVESTIGATE THE STRUCTURAL AND FINISHED CONDITION AFFECTING THE CONTRACT WORK INCLUDING OBSTRUCTIONS, GRADE DIFFERENCES OR AREA DIMENSIONAL DIFFERENCES. IN THE EVENT OF FIELD DISCREPANCY WITH CONTRACT DOCUMENTS, PLAN THE INSTALLATION WORK ACCORDINGLY BY NOTIFICATION AND APPROVAL OF THE OWNER'S AUTHORIZED REPRESENTATIVE AND ACCORDING TO THE CONTRACT SPECIFICATIONS. NOTIFY AND COORDINATE IRRIGATION CONTRACT WORK WITH APPLICABLE CONTRACTORS FOR THE LOCATION AND INSTALLATION OF PIPE, CONDUIT OR SLEEVES THROUGH OR UNDER WALLS, ROADWAYS, PAVING AND STRUCTURES BEFORE CONSTRUCTION. IN THE EVENT THESE NOTIFICATIONS ARE NOT PERFORMED, THE CONTRACTOR ASSUMES FULL RESPONSIBILITY FOR REQUIRED REVISIONS.

2. THE CONTRACTOR SHALL COMPLY WITH ALL APPLICABLE CODES, STANDARDS, AND REGULATIONS. ALL WORK AND MATERIALS SHALL BE IN FULL ACCORDANCE WITH THE LATEST RULES AND REGULATIONS OF THE NATIONAL ELECTRIC CODE; THE UNIFORM PLUMBING CODE, PUBLISHED BY THE WESTERN PLUMBING OFFICIALS ASSOCIATION; AND OTHER STATE OR LOCAL LAWS OR REGULATIONS. NOTHING IN THESE DRAWINGS IS TO BE CONSTRUED TO PERMIT WORK NOT CONFORMING TO THESE CODES OR REGULATIONS. THE CONTRACTOR SHALL FURNISH WITHOUT ANY EXTRA CHARGE, ANY ADDITIONAL MATERIAL AND LABOR WHEN REQUIRED BY THE COMPLIANCE WITH THESE CODES AND REGULATIONS.

3. THE CONTRACTOR SHALL COORDINATE INSTALLATION OF IRRIGATION SYSTEM WITH LAYOUT AND INSTALLATION OF THE PLANT MATERIALS TO INSURE THAT THERE WILL BE COMPLETE AND UNIFORM IRRIGATION COVERAGE OF PLANTING IN ACCORDANCE WITH THESE DRAWINGS, AND CONTRACT DOCUMENTS. THE IRRIGATION LAYOUT SHALL BE CHECKED BY THE CONTRACTOR AND OWNER'S AUTHORIZED REPRESENTATIVE PRIOR TO CONSTRUCTION TO DETERMINE IF ANY CHANGES, DELETIONS, OR ADDITIONS ARE REQUIRED. IRRIGATION SYSTEM SHALL BE INSTALLED AND TESTED PRIOR TO INSTALLATION OF PLANT MATERIAL.

4. THE INTENT OF THIS IRRIGATION SYSTEM IS TO PROVIDE THE MINIMUM AMOUNT OF WATER REQUIRED TO SUSTAIN GOOD PLANT HEALTH.

5. IT IS THE RESPONSIBILITY OF THE MAINTENANCE CONTRACTOR AND/OR OWNER TO PROGRAM THE IRRIGATION CONTROLLER(S) TO PROVIDE THE MINIMUM AMOUNT OF WATER NEEDED TO SUSTAIN GOOD PLANT HEALTH. THIS INCLUDES MAKING ADJUSTMENTS TO THE PROGRAM FOR SEASONAL WEATHER CHANGES, PLANT MATERIAL, WATER REQUIREMENTS, MOUNDS, SLOPES, SUN, SHADE AND WIND EXPOSURE.

6. IT IS THE RESPONSIBILITY OF A LICENSED ELECTRICAL CONTRACTOR TO PROVIDE 120 VOLT A.C. (2.5 AMP DEMAND PER CONTROLLER) ELECTRICAL SERVICE TO THE CONTROLLER LOCATION(S). IT IS THE RESPONSIBILITY OF THE IRRIGATION CONTRACTOR TO COORDINATE THE ELECTRICAL SERVICE STUB-OUT TO THE CONTROLLER(S). PROVIDE PROPER GROUNDING PER CONTROLLER MANUFACTURER'S INSTRUCTIONS AND IN ACCORDANCE WITH LOCAL CODES.

7. PROVIDE EACH CONTROLLER WITH ITS OWN GROUND ROD. SEPARATE THE GROUND RODS BY A MINIMUM OF EIGHT FEET. THE GROUND ROD SHALL BE AN EIGHT FOOT LONG BY 5/8" DIAMETER U.L. APPROVED COPPER CLAD ROD. INSTALL NO MORE THAN 6" OF THE GROUND ROD ABOVE FINISH GRADE. CONNECT #6 GAUGE WIRE WITH A U.L. APPROVED GROUND ROD CLAMP TO ROD AND BACK TO GROUND SCREW AT BASE OF CONTROLLER WITH APPROPRIATE CONNECTOR. MAKE THIS WIRE AS SHORT AS POSSIBLE, AVOIDING KINKS OR BENDING.

8. SCHEDULE A MEETING WHICH INCLUDES REPRESENTATIVES OF THE IRRIGATION CONTROLLER MANUFACTURER, THE MAINTENANCE CONTRACTOR, THE OWNER AND THE IRRIGATION CONTRACTOR AT THE SITE FOR INSTRUCTION ON THE PROPER PROGRAMMING AND OPERATION OF THE IRRIGATION CONTROLLER.

9. INSTALL 3" DETECTABLE TAPE ABOVE ALL PRESSURIZED MAIN LINES AS DETAILED. USE CHRISTY MODEL #TA-DT-3-BIRR FOR POTABLE IRRIGATION SYSTEMS IRRIGATION WATER SYSTEMS.

10. INSTALL 2-WIRE CABLE ALONG THE MAIN LINE. CONTACT CONTROLLER REPRESENTATIVE FOR A PRE-CONSTRUCTION MEETING.

11. INSTALL 2-WIRE CABLE WITHIN 1.25" CONDUIT WITH LONG SWEEPS IN AND OUT OF EACH VALVE BOX. SEAL ALL CONDUIT OPENINGS WITH WATERPROOF FOAM.

12. INSTALL A 14"X19" GREY ELECTRICAL PULL BOX EVERY 200' AND AT EVERY CHANGE IN DIRECTION. ONLY SPLICE TWO WIRE CABLE AT THREE WAY WIRE CONNECTIONS.

13. IRRIGATION CONTROL WIRES: SOLID COPPER WITH U.L. APPROVAL FOR DIRECT BURIAL IN GROUND. SIZE #14AWG WIRE WITH A JACKETED 2-CONDUCTOR. PREFERRED WIRE MAKE AND MODEL IS P7072D. ALL SPLICING SHALL BE MADE WITH 3-M DBR/Y-6 WATERPROOF SPLICE KIT.

14. DECODER GROUNDING SHALL BE PROVIDED EVERY 500 FEET OR EVERY 8 DECODERS, WHICHEVER IS SMALLER, AT THE CONTROLLER AND AT THE LAST DECODER OR AT THE END OF THE 2 WIRE PATH., . GROUND WITH A 5/8" X 8' COPPER CLAD GROUNDING ROD. #6 COPPER WIRE TO SURGE DEVICE/DECODER. INCLUDE A SURGE ARRESTOR AT EACH GROUNDING LOCATION. A SPLIT BOLT CONNECTION TO BE USED TO CONNECT THE SURGE DEVICE TO THE GROUND WIRE WITH A DBR/Y-6 WATERPROOF CONNECTOR.

15. SPLICING OF JACKETED 2-WIRE IS PERMITTED IN VALVE BOXES ONLY. LEAVE A 24" LONG COIL OF WIRE AT EACH SPLICE AND A 24" LONG EXPANSION LOOP IN ALL PULL BOXES.

16. VALVE BOXES IN TURF AREAS: INSTALL GREEN PLASTIC VALVE BOXES WITH BOLT DOWN, NON HINGED COVER MARKED "IRRIGATION CONTROL VALVE". BOX BODY SHALL HAVE KNOCK OUTS. ACCEPTABLE VALVE BOX MANUFACTURER'S INCLUDE NDS, CARSON OR APPROVED EQUAL.

17. VALVE BOXES WITHIN PLANTED AREA WITH MULCH: INSTALL BLACK PLASTIC VALVE BOXES WITH BOLT DOWN, NON HINGED COVER MARKED "IRRIGATION CONTROL VALVE". BOX BODY SHALL HAVE KNOCK OUTS. ACCEPTABLE VALVE BOX MANUFACTURER'S INCLUDE NDS, CARSON OR APPROVED EQUAL.

18. VALVE BOXES WITHIN HARDSCAPE AND DG AREAS: INSTALL REMOTE CONTROL VALVES IN A RECTANGULAR CONCRETE VALVE BOX. CHRISTY MODEL 809BOX WITH A CHRISTY NO9R LID OR APPROVED EQUAL. GATE VALVES AND QUICK COUPLING VALVES SHALL BE IN A 10" ROUND CONCRETE BOX BY CHRISTY, MODEL NO. FO8.

19. INSTALL REMOTE CONTROL VALVE BOXES 12" FROM WALK, CURB, LAWN, HEADER BOARD, BUILDING, OR LANDSCAPE FEATURE. AT MULTIPLE VALVE BOX GROUPS, INSTALL EACH BOX AN EQUAL DISTANCE FROM THE WALK, CURB, LAWN, HEADER BOARD, BUILDING, OR LANDSCAPE FEATURE, AND PROVIDE 12" FROM THE WALK, CURB, HEADER BOARD, BUILDING, OR LANDSCAPE FEATURE AND INSTALL EACH BOX 12" APART.

20. VALVE LOCATIONS SHOWN ARE DIAGRAMMATIC. INSTALL IN GROUND COVER/SHRUB AREAS (AVOID LAWN AREAS WHERE POSSIBLE).

21. THE CONTRACTOR SHALL LABEL CONTROL LINE WIRE AT EACH REMOTE CONTROL VALVE WITH A 2 1/4" X 2 3/4" POLYURETHANE I.D. TAG, INDICATING IDENTIFICATION NUMBER OF VALVE (CONTROLLER AND STATION NUMBER). ATTACH LABEL TO CONTROL WIRE. THE CONTRACTOR SHALL PERMANENTLY STAMP ALL VALVE BOX LIDS WITH APPROPRIATE IDENTIFICATION AS NOTED IN CONSTRUCTION DETAILS.

22. THE REMOTE CONTROL VALVES SPECIFIED ON THE DRAWINGS IS A PRESSURE REDUCING TYPE. SET THE DISCHARGE PRESSURE AS FOLLOWS:

A. SPRAY HEADS=40 PSI
B. ROTARY HEADS=60 PSI
C. DRIP EMITTERS=35 PSI
D. BUBBLERS= 30 PSI

23. FLUSH AND ADJUST IRRIGATION OUTLETS AND NOZZLES FOR OPTIMUM PERFORMANCE AND TO PREVENT OVER SPRAY ONTO WALKS, ROADWAYS, AND/OR BUILDINGS. SELECT THE BEST DEGREE OF THE ARC AND RADIUS TO FIT THE EXISTING SITE CONDITIONS AND THROTTLE THE FLOW CONTROL AT EACH VALVE TO OBTAIN THE OPTIMUM OPERATING PRESSURE FOR EACH CONTROL ZONE.

24. SET SPRINKLER HEADS PERPENDICULAR TO FINISH GRADE.

25. LOCATE EMITTER OUTLETS ON UPHILL SIDE OF PLANT OR TREE.

26. LOCATE BUBBLERS ON UPHILL SIDE OF PLANT OR TREE.

27. INSTALL A HUNTER HCV SERIES, KBI CV SERIES, OR APPROVED EQUAL SPRING LOADED CHECK VALVE IN SPRINKLER RISER ASSEMBLIES WHERE LOW OUTLET DRAINAGE WILL CAUSE EROSION AND/OR EXCESS WATER.

28. WHERE IT IS NECESSARY TO EXCAVATE ADJACENT TO EXISTING TREES, USE CAUTION TO AVOID INJURY TO TREES AND TREE ROOTS. EXCAVATE BY HAND IN AREAS WHERE TWO (2) INCH AND LARGER ROOTS OCCUR. BACK FILL TRENCHES ADJACENT TO TREE WITHIN TWENTY-FOUR (24) HOURS. WHERE THIS IS NOT POSSIBLE, SHADE THE SIDE OF THE TRENCH ADJACENT TO THE TREE WITH WET BURLAP OR CANVAS.

29. THE IRRIGATION SYSTEM DESIGN IS BASED ON THE MINIMUM OPERATING PRESSURE SHOWN ON THE IRRIGATION DRAWINGS. VERIFY WATER PRESSURE PRIOR TO CONSTRUCTION. REPORT ANY DIFFERENCE BETWEEN THE WATER PRESSURE INDICATED ON THE DRAWINGS AND THE ACTUAL PRESSURE READING AT THE IRRIGATION POINT OF CONNECTION TO THE OWNER'S AUTHORIZED REPRESENTATIVE.

30. IRRIGATION DEMAND: REFER TO PLANS.

31. THE EXISTING MAIN LINE SHOWN ON THE DRAWINGS IS DIAGRAMMATIC. VERIFY AND LOCATE EXISTING MAIN LINE IN FIELD. REPORT TO ARCHITECT IN WRITING ANY DEVIATION OF EXISTING MAIN LINE LOCATION FROM THAT SHOWN ON THE DRAWINGS.

32. AT POINT OF CONNECTION AT EXISTING MAIN LINE FOR NEW REMOTE CONTROL VALVES OR QUICK COUPLING VALVES, INSTALL A SERVICE SADDLE WITH REQUIRED TAPPED OUTLET SIZE. ROMAC 2025, OR APPROVED EQUAL.

33. AT POINTS OF CONNECTION BETWEEN EXISTING SOLVENT WELD MAIN LINE AND A NEW MAIN LINE BRANCH, USE THE FOLLOWING PROCEDURE:

A. REMOVE A PORTION OF EXISTING MAINLINE.
B. FABRICATE A TEE WITH TWO 12" SECTIONS OF PIPE ON EACH SIDE OF A SCH 80 TEE. USE A SCH 80 COUPLING ON ONE SIDE OF PIPE TO CONNECT NEW SECTION TO OLD. USE A ROMAC, HYMAX OR SMITH BLAIR REPAIR COUPLING WITHOUT A CENTER STOP ON OTHER SIDE OF TEE TO CONNECT EXISTING MAINLINE. NO SLIP FIXES ARE ALLOWED.

35. PIPE THREAD SEALANT COMPOUND SHALL BE RECTOR SEAL #5.

36. THE LANDSCAPE CONTRACTOR SHALL BE RESPONSIBLE FOR MINOR CHANGES IN THE IRRIGATION LAYOUT DUE TO OBSTRUCTIONS NOT SHOWN ON THE IRRIGATION DRAWINGS SUCH AS LIGHTS, FIRE HYDRANTS, SIGNS, ELECTRICAL ENCLOSURES, ETC.

37. THE LANDSCAPE CONTRACTOR SHALL BE RESPONSIBLE FOR CHANGES IN THE IRRIGATION LAYOUT AND VALVE ZONING DUE TO VARIATIONS IN THE EXISTING SITE CONDITIONS SUCH AS EXPOSURE FROM BUILDINGS, TRELLISES, TREES, ETC., AS WELL AS SLOPE AND SOIL CONDITIONS. THE CONTRACTOR SHALL NOTIFY THE LANDSCAPE ARCHITECT AND IRRIGATION CONSULTANT OF THE PROPOSED CHANGES PRIOR TO INSTALLATION FOR APPROVAL.

38. THE LANDSCAPE CONTRACTOR IS RESPONSIBLE FOR ADJUSTING THE IRRIGATION SYSTEM DESIGN IF THE PLANTING DESIGN CHANGES FROM THE ORIGINAL PLAN AND NEEDS TO ADAPT TO THE NEW PLANTING DESIGN. THE LANDSCAPE CONTRACTOR NEEDS TO NOTIFY THE LANDSCAPE ARCHITECT AND IRRIGATION CONSULTANT OF PROPOSED CHANGES PRIOR TO INSTALLATION FOR APPROVAL.

39. CONTRACTOR SHALL BE RESPONSIBLE FOR SUPPLEMENTAL HAND WATERING OF ALL PLANT MATERIAL WITHIN DRIPLINE AREAS UNTIL THE PLANTS ARE SUFFICIENTLY ESTABLISHED.

IRRIGATION LEGEND

SYMBOL	DESCRIPTION
	CONTROLLER AND STATION NUMBER FLOW (GPM) REMOTE CONTROL VALVE SIZE (IN INCHES) ASSOCIATED REMOTE CONTROL VALVE
	CONTROLLER AND STATION NUMBER AREA (SQ. FT.) FLOW (GPM) REMOTE CONTROL VALVE SIZE (IN INCHES) ASSOCIATED REMOTE CONTROL VALVE
	MAIN LINE: 2.5" THROUGHOUT: 1120-SCHEDULE 40 PVC PLASTIC PIPE WITH SCHEDULE 40 PVC SOLVENT WELD FITTINGS. 18" COVER.
	EXISTING MAIN LINE
	LATERAL LINE: 3/4" AND LARGER: 1120-SCHEDULE 40 PVC PLASTIC PIPE WITH SCHEDULE 40 PVC SOLVENT WELD FITTINGS. 12" COVER.
	DRIPLINE LATERAL LINE: 3/4" AND LARGER: 1120-SCHEDULE 40 PVC PLASTIC PIPE WITH SCHEDULE 40 PVC SOLVENT WELD FITTINGS. 12" COVER.
SLEEVING SIZE	SLEEVING: SCHEDULE 40 PVC PLASTIC PIPE. COVER TO BE AS INDICATED IN SPECIFICATIONS OR AS INDICATED ABOVE FOR PIPE DEPTH OF COVER.
WT WT WT	TWO WIRE CABLE: APPROXIMATE ROUTING OF TWO WIRE CABLE PATH WITHIN 1.25" SCH 40 PVC CONDUIT. INSTALL SCH 40 ELECTRICAL LONG SWEEP ELBOWS AT ALL CHANGES IN DIRECTION AND INTO AND OUT OF VALVE OR PULL BOXES. REFER TO DETAILS FOR MORE INFORMATION.

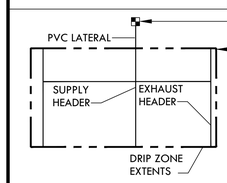

DRIPLINE REMOTE CONTROL VALVE

DRIP ZONE:

RAIN BIRD XFCV SERIES DRIPLINE WITH XF DRIPLINE INSERT FITTINGS, PART #XFCV-06-12. TUBING TO BE INSTALLED 4" BELOW GRADE IN A 12" O.C. GRID ACCORDING TO DETAILS. SIZE EXHAUST HEADERS AS FOLLOWS: 1". 0-10 GPM, 1.25". 11-20 GPM. ALL EXHAUST HEADERS SHALL BE 1" SCH 40 PVC OR 1" SCH 40 FLEXIBLE PVC. USE SCH. 40 PVC SOLVENT WELD FITTINGS. EXTEND PVC HEADERS TO THE ENDS OF ALL DRIP ZONES TO BALANCE FLOW IF REQUIRED. SEE DETAILS FOR FURTHER INFORMATION.

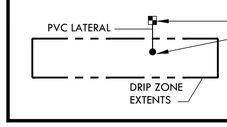

DRIPLINE REMOTE CONTROL VALVE

APPROXIMATE CONNECTION POINT BETWEEN DRIPLINE TUBING AND PVC SUPPLY WHEN DRIP ZONE IS LESS THAN 3 GPM AND NO PVC SUPPLY/EXHUST HEADERS ARE NEEDED. REFER TO DRIPLINE TUBING CONNECTION DETAIL FOR MORE INFORMATION.

IRRIGATION LEGEND

SYMBOL	MODEL NUMBER	DESCRIPTION	NOZZLE GPM	OPERATING PSI	OPERATING RADIUS (FEET)
35	5006+-FC-SAM-R/ 5000-MPR-35	RAIN BIRD POP-UP GEAR DRIVEN ROTOR (TURF)	7.58	45	30-35
35	5006+-PC-SAM-R/ 5000-MPR-35	RAIN BIRD POP-UP GEAR DRIVEN ROTOR (TURF)	3.81	45	30-35
35	5006+-PC-SAM-R/ 5000-MPR-35	RAIN BIRD POP-UP GEAR DRIVEN ROTOR (TURF)	1.92	45	30-35
30	5006+-PC-SAM-R/ 5000-MPR-30	RAIN BIRD POP-UP GEAR DRIVEN ROTOR (TURF)	1.40	45	25-30
25	5006+-FC-SAM-R/ 5000-MPR-25	RAIN BIRD POP-UP GEAR DRIVEN ROTOR (TURF)	3.82	45	20-25
25	5006+-PC-SAM-R/ 5000-MPR-25	RAIN BIRD POP-UP GEAR DRIVEN ROTOR (TURF)	2.0	45	20-25
	5012-+-FC-SAM-R/ 5000-MPR-25	RAIN BIRD POP-UP GEAR DRIVEN ROTOR (SHRUB/GC)	3.82	45	20-25
	5012-+-PC-SAM-R/ 5000-MPR-25	RAIN BIRD POP-UP GEAR DRIVEN ROTOR (SHRUB/GC)	2.0	45	20-25
∨ ▽	1812-SAM-PRS/ HE-VAN-15	RAIN BIRD POP-UP SPRAY SPRINKLER (SHRUB/GC)	1.8,0.9	30	12-15
V	1812-SAM-PRS/ HE-VAN-12	RAIN BIRD POP-UP SPRAY SPRINKLER (SHRUB/GC)	0.6	30	10-12
▼	1812-SAM-PRS/ HE-VAN-10	RAIN BIRD POP-UP SPRAY SPRINKLER (SHRUB/GC)	0.9	30	8-10
■	1401 SERIES	RAIN BIRD BUBBLER (TREE) MIN. 2 PER TREE. REFER TO BUBBLER DETAIL FOR QUANTITY OF BUBBLERS PER TREE SIZE.	0.25	30	TRICKLE
	770T03G	MATCO OR EQUAL BALL VALVE (DRIP MANUAL FLUSH VALVE)			
	OPERIND	RAIN BIRD DRIP ZONE INDICATOR			
	PEB SERIES	RAIN BIRD REMOTE CONTROL VALVE			
	XCZ-100-PRB-LC	RAIN BIRD REMOTE CONTROL VALVE DRIP ZONE KIT (3-20GPM)			
	44-LRC	RAIN BIRD 1" TWO-PIECE QUICK COUPLING VALVE (YELLOW LOCKING RUBBER COVER)			
	T113-K SERIES	NIBCO BRASS GATE VALVE (LINE SIZE)-2.5" AND SMALLER			
MV	3300-2.5"	SUPERIOR MASTER VALVE-2.5" (NORMALLY OPEN)			
FS	QS200-20	FLOMEC FLOW SENSOR - 2"			
C	ESP-LXD/SPLXD-SM75/ NCC-GP/LXMMSS	RAIN BIRD ESP-LXD 50 STATION CONTROLLER IN A STAINLESS STEEL WALL MOUNTED ENCLOSURE.			
—	IQ-CLOUD	ACCESS TO THE RAIN BIRD IQ CLOUD.			
R	WR2-RFC	RAIN BIRD WIRELESS RAIN/FREEZE SENSOR			
1	FD101TURF	RAIN BIRD DECODER (1 PER SINGLE VALVE GROUPING)			
2	FD202TURF	RAIN BIRD DECODER (1 PER VALVE GROUPINGS OF 2)			
4	FD401TURF	RAIN BIRD DECODER (1 PER VALVE GROUPINGS OF 3-4)			
LA	LSP1TURF	LIGHTENING ARRESTOR (1 EVERY 500 FEET ALONG MAIN) REFER TO DETAILS FOR INSTALLATION INSTRUCTIONS.			
SD	SD210TURF	RAIN BIRD SENSOR DECODER (1 PER FLOW SENSOR)			
—	NOT SHOWN ON PLANS	ROUTE TWO WIRE CABLE TO ALL REMOTE CONTROL VALVES. SIZE #14AWG WIRE WITH A JACKETED 2-CONDUCTOR. PREFERRED WIRE MAKE AND MODEL IS PAIGE P7072D . ALL SPLICING SHALL BE MADE WITH 3-M DBR/Y-6 WATERPROOF SPLICE KITS OR APPROVED EQUAL. INSTALL 2 WIRE CABLE WITHIN 1.25" SCH 40 ELECTRICAL CONDUIT. PULL BOXES SHALL BE LOCATED EVERY 200' NO SPLICES ARE ALLOWED BETWEEN VALVES. REFER TO DETAIL FOR INSTALLATION INSTRUCTIONS.			
P	-	EXISTING BOOSTER PUMP			
	-	EXISTING 3" BACKFLOW PREVENTER			

Irrigation Consultant:
Russell D. Mitchell Associates, Inc.
2760 Camino Diablo
Walnut Creek, CA 94597
tel 925.939.3985 ♦ fax 925.932.5671
www.rmairrigation.com

IDENTIFICATION STAMP
DIV. OF THE STATE ARCHITECT
APP: 02-123848 INC: 01
REVIEWED FOR
SS ☑ FLS ☑ ACS ☑
DATE: 05/21/2026

LPA
ARCHITECTURE ENGINEERING INTERIOR DESIGN
LANDSCAPE ARCHITECTURE PLANNING
949-261-1001 Office
LPADesignStudios.com
5301 California Avenue, Suite 100
Irvine, California 92617

LICENSED LANDSCAPE ARCHITECT
04/02/26
10/31/2026
EXPIRATION DATE
STATE OF CALIFORNIA

This document and all other project documents, ideas, aesthetics and designs incorporated therein are instruments of service. All project documents are copyright protected, are the property of LPA, Inc. (LPA) and cannot be lawfully used in whole or in part for any project or purpose except as set forth in the contractual agreement between LPA and its Client. The unauthorized disclosure and/or use of the project documents (including the creation of derivative works), may give rise to liability for copyright infringement, unlawful disclosure, use or misappropriation of property rights held by LPA. The unauthorized use of the project documents will give rise to the recovery of monetary losses and damages including attorney fees and costs for which th unauthorized user will be held liable.
Project documents describe the design intent of the work and are not a representation of as-built or existing conditions. LPA is not responsible for any discrepancies between the project documents and the existing conditions.

© LPA, Inc.

ELKHORN ELEMENTARY SCHOOL
CAMPUS MODERNIZATION INCREMENT 1

10505 DAVIS ROAD, STOCKTON, CA 95290

Developed for
LODI UNIFIED SCHOOL DISTRICT

Revision	Date

Submittal	Date
100% SCHEMATIC DESIGN	08/29/2025
DSA SUBMITTAL	12/18/2025

Job Number	3194201
Checked By	AW, EW
Scale	AS NOTED

IRRIGATION NOTES AND LEGEND

1L6.02

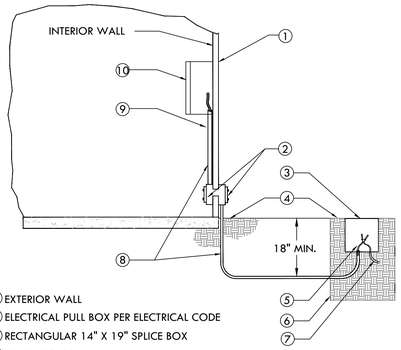

① EXTERIOR WALL
② ELECTRICAL PULL BOX PER ELECTRICAL CODE
③ RECTANGULAR 14" X 19" SPLICE BOX
④ FINISH GRADE
⑤ DBY SPLICE KIT
⑥ PLANTER
⑦ DIRECT BURIAL LOW VOLTAGE WIRES ROUTED TO REMOTE CONTROL VALVES
⑧ SCHEDULE 40 GRAY PVC ELECTRICAL CONDUIT WITH SWEEPS FOR LOW VOLTAGE WIRE. ROUTE CONDUIT TO NEAREST PLANTER AND PLACE IN SPLICE BOX.
⑨ LOW VOLTAGE WIRES TO CONTROLLER
⑩ CONTROLLER(S)

NOTE:
WHEN POSSIBLE USE DIRECT WIRE PULLS FROM CONTROLLER TO REMOTE CONTROL VALVES. IF NECESSARY USE MULTI-STRAND WIRE FROM CONTROLLER TO SPLICE BOX. MAKE SPLICES WATER TIGHT WITH DBY CONNECTORS. SPLICES TO OCCUR IN SPLICE BOX ONLY.

1 INTERIOR MOUNTED CONTROLLER
SCALE: NONE

NOTES:
1. ALL ELECTRICAL WORK MUST CONFORM TO LOCAL CODES. REFER TO PRODUCT LITERATURE FOR ADDITIONAL INSTALLATION REQUIREMENTS.
2. INSTALLATION TO BE COMPLETED IN ACCORDANCE WITH MANUFACTURER'S SPECIFICATIONS.

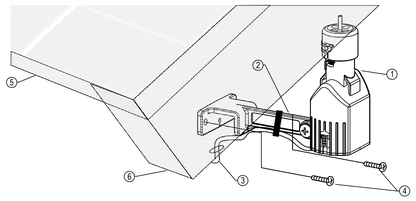

SECTION

① IRRITROL RAIN SENSOR MODEL NUMBER RS500.
② ADJUSTABLE MOUNTING BRACKET.
③ CONNECTION WIRE ROUTED THROUGH BUILDING WITHIN ELECTRICAL CONDUIT TO THE IRRIGATION CONTROLLER.
④ STAINLESS STEEL SCREWS.
⑤ ROOF.
⑥ EAVE.

2 RAIN SENSOR - WIRED
SCALE: NONE

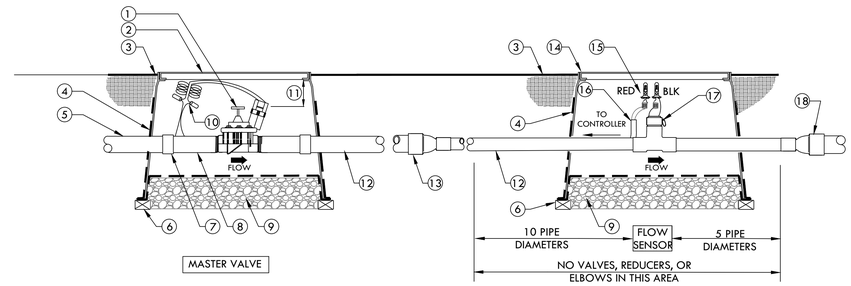

① MASTER CONTROL VALVE WITH FLOW CONTROL AND MANUAL BLEED (PRESSURE REGULATOR WHERE SHOWN ON PLANS). CENTER WITHIN BOX.
② 14" X 19" RECTANGULAR PLASTIC VALVE BOX WITH BOLT DOWN LID. INSTALL BOX AS SHOWN IN BOX INSTALLATION DETAIL.
③ FINISH GRADE.
④ 1/2" MESH, 19 GAUGE HOT DIPPED GALVANIZED STEEL WIRE TO COVER VALVE BOX BOTTOM AND CUTOUTS.
⑤ PVC MAIN LINE FROM BACKFLOW OR PUMP.
⑥ BRICK-ONE ON EACH CORNER.
⑦ SCH 80 PVC COUPLING- 2 TOTAL
⑧ SCHEDULE 80 PVC TOE NIPPLE- 4" IN LENGTH - 2 TOTAL.
⑨ PEA GRAVEL OR 3/4" DRAIN ROCK- 4" [100mm] DEEP BELOW VALVE (NO SOIL IN VALVE BOX).
⑩ VALVE CONTROL WIRE- PROVIDE 3M-DBY SEAL PACKS AT ALL SPLICES AND 36" OF EXCESS UF WIRE IN A 1" DIAMETER COIL. FOR TWO-WIRE PROJECTS ROUTE CONDUIT AND TWO CABLE INTO VALVE BOX AND USE DECODER THAT IS COMPATIBLE WITH CONTROLLER AND VALVE.
⑪ 3" MIN 6" MAX.
⑫ SCH 80 PVC MAIN LINE TO FLOW SENSOR.
⑬ IF NECESSARY INSTALL A SCH. 80 REDUCING COUPLING, TYP.
⑭ 10" ROUND PLASTIC VALVE BOX WITH BOLT DOWN LID. INSTALL BOX AS SHOWN IN BOX INSTALLATION DETAIL.
⑮ 18 GAUGE AWG DIRECT BURIAL WIRE. FLOW SENSOR WIRE MUST BE RUN IN 1" PVC CONDUIT FROM FLOW SENSOR TO CONTROLLER ENCLOSURE. PROVIDE 3M-DBY SEAL PACKS AT ALL SPLICES AND 36" OF EXCESS WIRE IN A 1" DIAMETER COIL. FOR TWO-WIRE PROJECTS ROUTE CONDUIT AND TWO CABLE INTO SENSOR BOX AND USE SENSOR DECODER THAT IS COMPATIBLE WITH CONTROLLER AND SENSOR.
⑯ SCH 40 PVC CONDUIT FOR SENSOR WIRE OR TWO WIRE CABLE FROM CONTROLLER.
⑰ FLOW SENSOR MUST BE INSTALLED WITH INSERT (TOP) POSITIONED VERTICALLY AND BODY (TEE) POSITIONED HORIZONTALLY. FOR FLOWMEC SENSORS INSTALL ON 45° ANGLE.
⑱ SCH. 80 REDUCING COUPLING UPSIZING TO MAIN LINE SERVICING IRRIGATION SYSTEM IF REQUIRED.

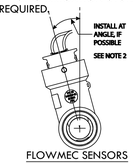

FLOWMEC SENSORS

3 MASTER VALVE & FLOW SENSOR INSTALLATION
SCALE: NONE

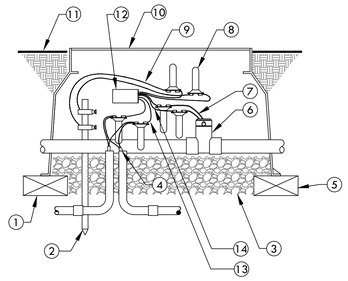

① 2-WIRE PATH JACKETED/ TWISTED FROM CONTROLLER/DECODER. ALLOW 24" SLACK PER DECODER
② INSTALL 5/8" DIAMETER COPPER GROUND ROD OF 8' LENGTH IN A 10" ROUND BOX WITH BRASS CLAMPS (1 OF 2)
③ PEA GRAVEL OR 3/4" DRAIN ROCK- 4" [100mm] DEEP BELOW VALVE (NO SOIL IN VALVE BOX).
④ JACKETED 2-WIRE PATH TO NEXT DECODER
⑤ BRICK-1 EACH CORNER.
⑥ FLOW SENSOR
⑦ FLOW SENSOR WIRE (1 OF 2)
⑧ 3M DBR/Y-6 (6 TOTAL)
⑨ GREEN/YELLOW WIRE FROM SD-210TURF TO GROUNDING ROD BRASS CLAMP
⑩ 10" ROUND VALVE BOX
⑪ FINISH GRADE
⑫ RAIN BIRD SD-210TURF
⑬ BLUE WIRES(2) FROM SD-210TURF TO TWO WIRE PATH
⑭ RED & BLACK WIRE FROM SD-210TURF DECODER TO FLOW SENSOR

4 RAIN BIRD FLOW SENSOR DECODER
SCALE: NONE

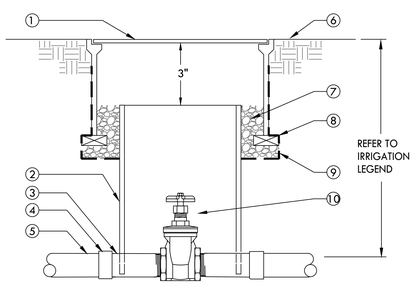

① 10" ROUND PLASTIC VALVE BOX WITH BOLT DOWN LID.
② 8" CLASS 160 OR SCHEDULE 40 PVC PIPE (NOTCH TO FIT OVER MAIN LINE PIPE).
③ SCH 80 TOE NIPPLE. 6" IN LENGTH. (2 TOTAL)
④ SCH 80 COUPLING (2 TOTAL)
⑤ PVC MAIN LINE.
⑥ FINISH GRADE.
⑦ PEA GRAVEL OR 3/4" DRAIN ROCK - 4" DEEP (NO SOIL IN VALVE BOX).
⑧ BRICK-2 TOTAL.
⑨ 19 GAUGE 1/2" SQUARE WIRE MESH. WRAP UP SIDES OF BOX.
⑩ GATE VALVE WITH X-TOP HANDLE.

5 GATE VALVE - 3" AND SMALLER
SCALE: NONE

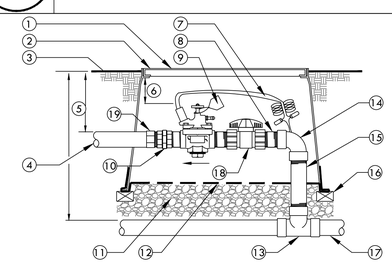

① REMOTE CONTROL VALVE WITH FLOW CONTROL AND MANUAL BLEED (PRESSURE REGULATOR WHERE SHOWN ON PLANS).
② USE A NDS PRO SERIES 14" X 19" RECTANGULAR PLASTIC VALVE BOX WITH BOLT DOWN LID FOR 1" VALVES. FOR 1.5" AND LARGER VALVES INSTALL BALL VALVE WITHIN A SEPARATE 10" ROUND BOX OR ONE BALL VALVE PER MANIFOLD OF VALVES. GATE VALVE SIZE SHALL BE SAME AS LARGEST VALVE WITHIN MANIFOLD. ONE VALVE PER BOX- NO EXCEPTIONS. INSTALL BOX AS SHOWN IN BOX INSTALLATION DETAIL.
③ FINISH GRADE.
④ PVC LATERAL LINE.
⑤ REFER TO IRRIGATION SPECS.
⑥ 3" [75mm] MIN, 6" [150mm] MAX.
⑦ VALVE CONTROL WIRE- PROVIDE SEAL PACKS AT ALL SPLICES AND 3' [1m] OF EXCESS UF WIRE IN A 1" [25mm] DIAMETER COIL.
⑧ SCHEDULE 80 PVC NIPPLE (3 TOTAL).
⑨ VALVE I.D. TAG (CONTROLLER AND STATION NUMBER).
⑩ SCHEDULE 80 PVC THREADED UNION.
⑪ PEA GRAVEL OR 3/4" DRAIN ROCK- 4" [100mm] DEEP BELOW VALVE (NO SOIL IN VALVE BOX).
⑫ 19 GAUGE 1/2" [12mm] SQUARE WIRE MESH.
⑬ SCHEDULE 40 OR 80 PVC TEE. REFER TO LEGEND FOR TYPE.
⑭ SCHEDULE 80 PVC 90° ELBOW (TxT).
⑮ SCHEDULE 80 PVC NIPPLE- LENGTH AS REQUIRED.
⑯ BRICK-1 EACH CORNER.
⑰ PVC MAIN LINE.
⑱ SCHEDULE 80 PVC UNION BALL VALVE (ONE PER VALVE).
⑲ SCHEDULE 40 MALE ADAPTER

6 REMOTE CONTROL VALVE
SCALE: NONE

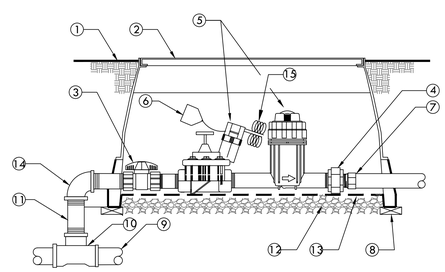

① FINISH GRADE.
② RECTANGULAR PLASTIC VALVE BOX WITH BOLT DOWN LID. ONE VALVE PER BOX- NO EXCEPTIONS. INSTALL BOX AS SHOWN IN BOX INSTALLATION DETAIL.
③ SCHEDULE 80 PVC UNION BALL VALVE (ONE PER VALVE).
④ SCHEDULE 80 PVC THREADED UNION.
⑤ REMOTE CONTROL VALVE DRIP ZONE KIT. (SHALL INCLUDE VALVE, FILTER AND A 40 PSI PRESSURE REDUCING VALVE)
⑥ VALVE I.D. TAG (CONTROLLER AND STATION NUMBER).
⑦ SCHEDULE 40 MALE ADAPTER
⑧ BRICK-1 EACH CORNER.
⑨ PVC MAIN LINE.
⑩ SCHEDULE 40 OR 80 PVC TEE. REFER TO LEGEND FOR TYPE.
⑪ SCHEDULE 80 PVC NIPPLE-(4-TOTAL) LENGTH AS REQUIRED.
⑫ PEA GRAVEL OR 3/4" [20mm] DRAIN ROCK - 4" [102mm] DEEP BELOW VALVE (NO SOIL IN VALVE BOX).
⑬ 19 GAUGE 1/2" [13mm] SQUARE WIRE MESH.
⑭ SCHEDULE 80 PVC 90° ELBOW (TxT).
⑮ VALVE CONTROL WIRE- PROVIDE 3M-DBY SEAL PACKS AT ALL SPLICES AND 3' [1m] OF EXCESS UF WIRE IN A 1" [25mm] DIAMETER COIL.

7 REMOTE CONTROL VALVE (DRIPZONE)
SCALE: NONE

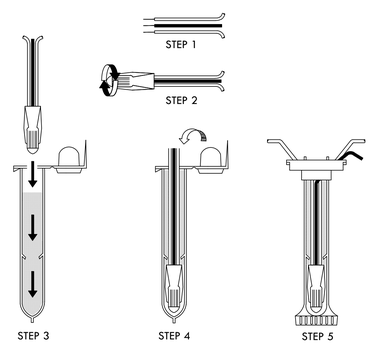

NOTE:
MAXIMUM # OF WIRES PER CONNECTOR:
- 3-#14 GAUGE
- 2-#12 GAUGE

INSTRUCTIONS:
1. STRIP WIRES APPROXIMATELY 1/2" FROM ENDS TO EXPOSE WIRE.
2. TWIST CONNECTOR AROUND WIRES CLOCKWISE UNTIL HAND TIGHT, DO NOT OVERTIGHTEN.
3. INSERT WIRE ASSEMBLY TO BOTTOM OF GEL-FILLED TUBE. CHECK TO MAKE SURE CONNECTOR HAS BEEN PUSHED PAST LOCKING FINGERS AND IS SEATED AT THE BOTTOM OF THE TUBE.
4. PLACE WIRES WHICH EXIT TUBE IN WIRE EXIT HOLES AND CLOSE CAP UNTIL IT SNAPS.
5. INSPECT FINAL SPLICE ASSEMBLY THAT IT IS SECURED.

8 WEATHERPROOF WIRE SPLICE ASSEMBLY
SCALE: NONE

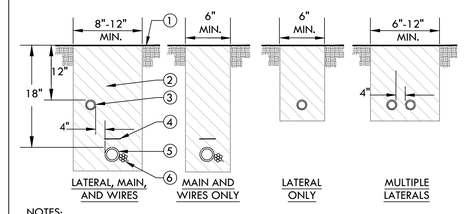

NOTES:
1. ALL MAIN SUPPLY LINES AND LATERAL LINES SHALL BE PLACED IN SLEEVES UNDER PAVED SURFACES. INSTALL LOW VOLTAGE WIRES WITHIN A SEPARATE CONDUIT UNDER PAVED SURFACES. DO NOT TAPE WIRES WITHIN CONDUIT. EXTEND SLEEVES A MINIMUM OF 12" BEYOND HARDSCAPE ON EACH SIDE OF SLEEVE.
2. REUSE SALVAGED EXCAVATED FILL AND COMPACT TO ORIGINAL DENISITY IN LANDSCAPE AREAS. ALL OTHER AREAS SHALL BE AT 95% COMPACTION. BACKFILL MATERIAL SHALL BE THE EARTH EXCAVATED FROM THE TRENCHES, FREE FROM ROCKS (ANYTHING LARGER THAN 2"), CONCRETE CHUNKS, AND OTHER FOREIGN OR COARSE MATERIALS.
3. WHEN 12" POP-UP SPRINKLER HEADS ARE USED, INCREASE THE DEPTH OF LATERAL TO 18" AT THE SPRINKLER LOCATION ONLY.

① FINISH GRADE.
② CLEAN BACKFILL MATERIAL.
③ LATERAL LINE.
④ 3" DETECTABLE WARNING TAPE OVER MAIN LINE. INSTALL 3" ABOVE MAIN LINE. USE CHRISTY MODEL #TA-DT-3-BIRR FOR POTABLE IRRIGATION SYSTEMS OR #TA-DT-3-PRW FOR RECYCLED IRRIGATION WATER SYSTEMS
⑤ MAIN LINE.
⑥ LOW VOLTAGE CONTROL WIRES, TWO-WIRE CABLE, OR CONDUIT WITH WIRES. FOR MULTIPLE WIRES, TAPE AND BUNDLE WIRES AT 10 FT. INTERVALS. WIRING SHALL BE LAID OUT LOOSELY IN THE TRENCH.

9 TRENCHING
SCALE: NONE

Irrigation Consultant:
Russell D. Mitchell Associates, Inc.
2760 Camino Diablo
Walnut Creek, CA 94597
tel 925.939.3985 ♦ fax 925.932.5671
www.rmairrigation.com

IDENTIFICATION STAMP
DIV. OF THE STATE ARCHITECT
APP: 02-123848 INC: 01
REVIEWED FOR
SS ☑ FLS ☑ ACS ☑
DATE: 05/21/2026

LPA
ARCHITECTURE ENGINEERING INTERIOR DESIGN
LANDSCAPE ARCHITECTURE PLANNING
949-261-1001 Office
LPADesignStudios.com
5301 California Avenue, Suite 100
Irvine, California 92617

LICENSED LANDSCAPE ARCHITECT
YASUNORI SHIMOTOMAI
No. 5595
04/02/26
10/31/2026
RENEWAL DATE
STATE OF CALIFORNIA

This document and all other project documents, ideas, aesthetics and designs incorporated therein are instruments of service. All project documents are copyright protected, are the property of LPA, Inc. (LPA) and cannot be lawfully used in whole or in part for any project or purpose except as set forth in the contractual agreement between LPA and its Client. The unauthorized disclosure and/or use of the project documents (including the creation of derivative works), may give rise to liability for copyright infringement, unlawful disclosure, use or misappropriation of property rights held by LPA. The unauthorized use of the project documents will give rise to the recovery of monetary losses and damages including attorney fees and costs for which th unauthorized user will be held liable.
Project documents describe the design intent of the work and are not a representation of as-built or existing conditions. LPA is not responsible for any discrepancies between the project documents and the existing conditions.
© LPA, Inc.

ELKHORN ELEMENTARY SCHOOL
CAMPUS MODERNIZATION INCREMENT 1
10505 DAVIS ROAD, STOCKTON, CA 95290
Developed for
LODI UNIFIED SCHOOL DISTRICT

Revision	Date

Submittal	Date
100% SCHEMATIC DESIGN	08/29/2025
DSA SUBMITTAL	12/18/2025

Job Number	3194201
Checked By	AW, EW
Scale	AS NOTED

IRRIGATION DETAILS

1L6.03

NOTE:
1. ALL DECODERS SHALL HAVE A VALVE NUMBER ADDRESSED AT CONTROLLER PRIOR TO INSTALLATION.
2. USE U.F. SAFETY CABLE STRIPPER BY KING INNOVATION (MODEL NUMBER 46200) FOR ALL TWO-WIRE SPLICE CONNECTIONS.

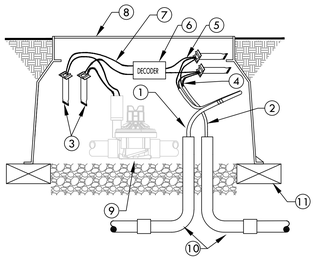

① #14AWG TWO WIRE CABLE FROM CONTROLLER. REFER TO IRRIGATION NOTES FOR MODEL NUMBER OF WIRE. ALLOW A 24" SLACK PER DECODER. USE ELECTRICAL TAPE TO HOLD SLACK CABLES TOGETHER.
② TWO WIRE CABLE TO NEXT DECODER
③ 3M DBR/Y-6 OR APPROVED EQUAL WATERPROOF SPLICE KIT (4 TOTAL)
④ A MAXIMUM OF 4" OF WIRE SHALL BE STRIPPED FROM TWO WIRE CABLE WHEN SPLICING AT DECODERS.
⑤ CONNECT CORRECT DECODER WIRES TO TWO WIRE CABLES.
⑥ DECODER
⑦ CONNECT CORRECT DECODER WIRES TO VALVE SOLENOID WIRES
⑧ VALVE BOX. REFER TO REMOTE CONTROL VALVE DETAIL FOR INSTALLATION INSTRUCTIONS.
⑨ REMOTE CONTROL VALVE. REFER TO REMOTE CONTROL VALVE DETAIL FOR INSTALLATION INSTRUCTIONS.
⑩ 1.25" CONDUIT FOR 2 WIRE CABLE WITH LONG SWEEPS IN AND OUT OF EACH VALVE BOX. SEAL ALL CONDUIT OPENINGS WITH WATERPROFF FOAM.
⑪ BRICK-ONE ON EACH CORNER

1 DECODER WIRING IN CONDUIT
SCALE: NONE

NOTE:
TWO WIRE DECODER SYSTEMS MUST BE PROPERLY GROUNDED IN ORDER TO PROTECT AGAINST LIGHTNING SURGES. THE COMMUNICATION CABLE MUST BE GROUNDED NO FURTHER THAN 500' FROM ANY DECODER OR FOR EVERY EIGHT DECODERS AND AT THE END OF THE TWO WIRE PATH. THE SURGE DEVICE MUST BE A RAIN BIRD MODEL LSP-1TURF. THE MINIMUM DISTANCE BETWEEN THE SURGE ARRESTOR AND THE GROUND ROD SHOULD BE 3' (91.4CM). WEATHERTRAK RECOMMENDS A SPLIT BOLT CONNECTION TO BE USED TO CONNECT THE SURGE DEVICE TO THE GROUND WIRE WITH A 3M DBY-6 WATERPROOF CONNECTOR.

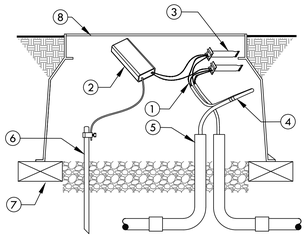

① 2-WIRE PATH JACKETED/ TWISTED FROM CONTROLLER. ALLOW A 24" SLACK PER DECODER
② RAIN BIRD LSP1TURF SURGE PROTECTOR, FD-401, FD-601 OR SD-210. ONE EVERY 500' OR EVERY 8 DECODERS WHICHEVER IS SMALLER. STARTING FROM CONTROLLER.
③ 3M DBR/Y-6 OR APPROVED EQUAL WATERPROOF SPLICE KIT (4 TOTAL)
④ 2-WIRE PATH JACKETED/ TWISTED TO NEXT DECODER
⑤ 1.25" CONDUIT FOR 2 WIRE CABLE WITH LONG SWEEPS IN AND OUT OF EACH VALVE BOX. SEAL ALL CONDUIT OPENINGS WITH WATERPROOF FOAM.
⑥ INSTALL 5/8" DIAMETER COPPER GROUND ROD OF 8' LENGTH. REQUIRED COPPER GROUND CLAMP.
⑦ BRICK-ONE ON EACH CORNER
⑧ GREY RECTANGULAR PLASTIC VALVE BOX WITH BOLT DOWN LID. HEAT BRAND "GR" INTO LID.

2 LIGHTNING ARRESTOR
SCALE: NONE

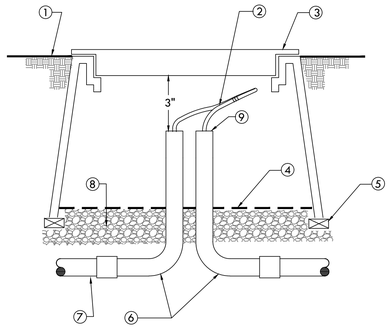

① FINISH GRADE
② 24" LOOP OF TWO WIRE CABLE.
③ GREY RECTANGULAR PLASTIC VALVE BOX WITH BOLT DOWN LID. HEAT BRAND "PB" INTO LID.
④ 18 GAUGE 1/2" [13mm] SQUARE STAINLESS STEEL WIRE MESH.
⑤ BRICK-ONE ON EACH CORNER
⑤ SCHEDULE 40 PVC SWEEP ELLS
⑥ SCHEDULE 40 U.L. LISTED PVC CONDUIT
⑦ PEA GRAVEL OR 3/4" [20mm] DRAIN ROCK - 4" [102mm] DEEP BELOW VALVE (NO SOIL IN VALVE BOX).
⑧ SEAL ALL CONDUIT OPENINGS WITH WATERPROOF FOAM.

3 IRRIGATION TWO WIRE PULL BOX
SCALE: NONE

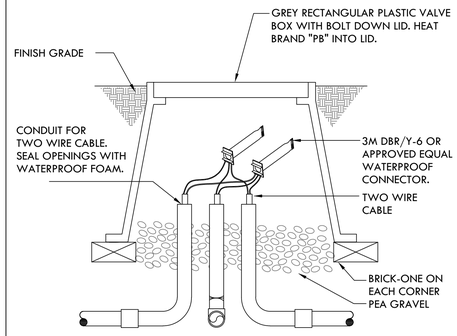

4 2-WIRE SPLICE BOX AT MAIN LINE TEE OR 3 WAY WIRE BRANCH
SCALE: NONE

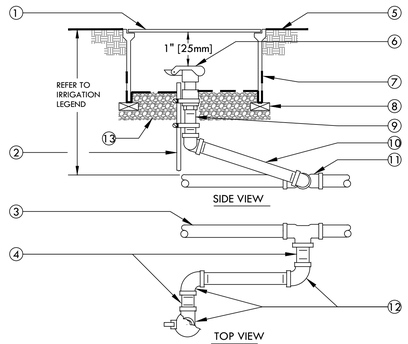

① 10" ROUND PLASTIC VALVE BOX WITH BOLT DOWN LID.
② 1 1/4" x 1 1/4" x 3/16" [30mm x 30mm x 5mm] ANGLE IRON 30" [760mm] LONG W/2 STAINLESS STEEL STRAPS (ONE AROUND QCV).
③ PVC MAIN LINE.
④ 3" [75mm] LONG SCHEDULE 80 PVC THREADED NIPPLE.
⑤ FINISH GRADE.
⑥ QUICK COUPLING VALVE.
⑦ 19 GAUGE 1/2" [13mm] SQUARE WIRE MESH.
⑧ BRICK - 2 TOTAL.
⑨ SCHEDULE 80 PVC THREADED NIPPLE.
⑩ 10" [250mm] LONG SCHEDULE 80 PVC THREADED NIPPLE.
⑪ UPC APPROVED SCHEDULE 40 PVC TEE OR ELBOW.
⑫ SCHEDULE 80 PVC THREADED 90° ELL.
⑬ PEA GRAVEL OR 3/4" DRAIN ROCK- 4" [100mm] DEEP BELOW VALVE (NO SOIL IN VALVE BOX).

NOTE:
NIPPLES AND FITTINGS TO BE SAME SIZE AS VALVE IPT INLET THREAD SIZE.

5 QUICK COUPLING VALVE
SCALE: NONE

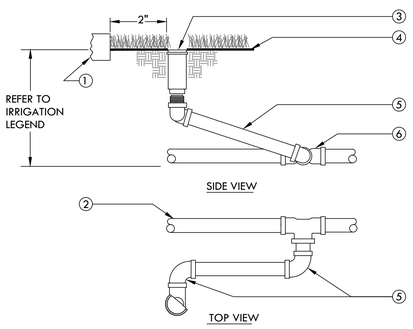

NOTES:
1. SET SPRINKLER 1" ABOVE FINISH GRADE AT TIME OF INSTALLATION - LOWER TO FINISH GRADE WHEN TURF IS WELL ESTABLISHED.

① WALL, WALK, CURB OR HEADER.
② PVC LATERAL LINE.
③ POP-UP ROTARY SPRINKLER.
④ FINISH GRADE.
⑤ UNITIZED SWING JOINT: 3/4"-LASCO MODEL T732-212 1"-LASCO MODEL T932-212.
⑥ SCHEDULE 40 PVC TEE OR ELBOW WITH THREADED OUTLET.

6 POP-UP ROTARY SPRINKLER - TURF
SCALE: NONE

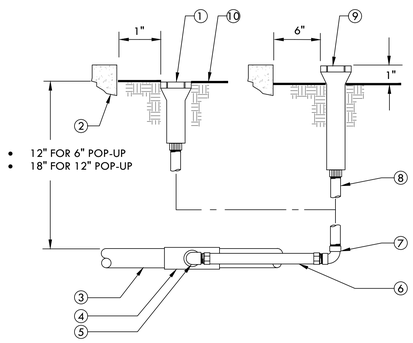

① POP-UP LAWN.
② WALL, WALK, CURB OR BUILDING.
③ PVC LATERAL LINE.
④ SCH. 40 PVC TEE OR ELBOW.
⑤ 1/2" SCH. 40 PVC STREET ELL.
⑥ 1/2" FLEXIBLE IPS HOSE 6" LONG WITH MALE ADAPTERS.
⑦ 1/2" SCH. 40 PVC THREADED 90° ELL.
⑧ 1/2" [13mm] FLEXIBLE IPS HOSE 6" [150mm] LONG WITH MALE ADAPTERS OR 1/2" [13mm] FLEXIBLE SWING JOINT (1/2" x 6") [13mm x 150mm] WITH A MINIMUM PRESSURE RATING OF 100 PSI [690kPa].
⑨ POP-UP SHRUB SPRAY SPRINKLER OR BUBBLER.
⑩ FINISH GRADE.

7 POP-UP SPRAY SPRINKLER RISER
SCALE: NONE

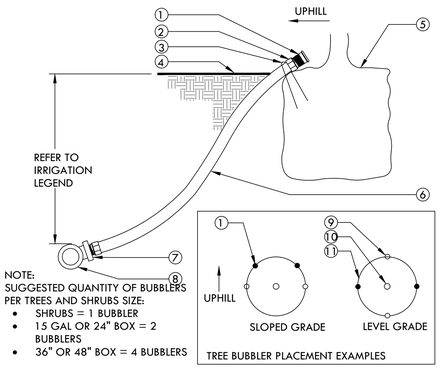

NOTE:
SUGGESTED QUANTITY OF BUBBLERS PER TREES AND SHRUBS SIZE:
- SHRUBS = 1 BUBBLER
- 15 GAL OR 24" BOX = 2 BUBBLERS
- 36" OR 48" BOX = 4 BUBBLERS

① BUBBLER (TO BE INSTALLED ON TOP OF ROOTBALL).
② 1/2" SCH. 40 MALE ADAPTER (2 TOTAL).
③ 6" STAPLE.
④ FINISH GRADE.
⑤ TREE OR SHRUB ROOTBALL.
⑥ 1/2" IPS FLEXIBLE PVC. USE WELD-ON 795 SOLVENT CEMENT OR EQUAL WHEN BONDING PVC HOSE TO FITTINGS.
⑦ PVC TEE (SST), ELBOW (ST) OR FEMALE ADAPTER.
⑧ PVC LATERAL LINE.
⑨ TREE STAKES.
⑩ TREE OR SHRUB.
⑪ EDGE OF ROOTBALL (TYPICAL).

8 TREE AND SHRUB BUBBLER
SCALE: NONE

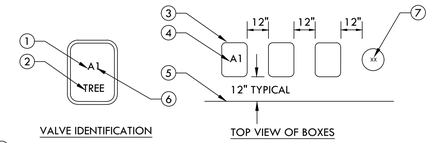

① CONTROLLER ID.
② ALL TREE VALVES TO HAVE TREE BRANDED INTO LID.
③ RECTANGULAR VALVE BOX.
④ HEAT BRAND VALVE TYPE PER TABLE OR CONTROLLER ID AND STATION NUMBER INTO LID.
⑤ EDGE OF LAWN, WALK, FENCE, CURB, ETC.
⑥ STATION NUMBER.
⑦ ROUND VALVE BOX FOR QCV AND GATE VALVE. HEAT BRAND VALVE TYPE INTO INTO LID PER TABLE.

ITEMS TO BRAND:	BRAND CODE
GATE VALVE	GV
PRESSURE REDUCER	PRV
MASTER VALVE	MV
FLOW SENSOR	FS
HYDROMETER	HM
MAIN LINE AIR RELIEF	ARV
REMOTE CONTROL VALVE	A___
QUICK COUPLER	QC
SPLICE BOX	SB
PULL BOX	PB
LIGHTNING ARRESTOR	LA
GROUND ROD	GR

INSTRUCTIONS:
1. CENTER VALVE BOX OVER REMOTE CONTROL VALVE TO FACILITATE SERVICING VALVE.
2. SET BOXES 1" ABOVE FINISH GRADE OR MULCH COVER IN GROUND COVER/SHRUB AREA AND FLUSH WITH FINISH GRADE IN TURF AREA.
3. SET RCV AND VALVE BOX ASSEMBLY IN GROUND COVER/SHRUB AREA WHERE POSSIBLE. INSTALL IN LAWN ONLY IF GROUND COVER DOES NOT EXIST ADJACENT TO LAWN.
4. SET BOXES PARALLEL TO EACH OTHER AND PERPENDICULAR TO EDGE OF LAWN, WALK, FENCE, CURB, ETC.
5. AVOID HEAVILY COMPACTING SOIL AROUND VALVE BOXES TO PREVENT COLLAPSE AND DEFORMATION OF VALVE BOX SIDES.
6. INSTALL EXTENSION BY VALVE BOX MANUFACTURER AS REQUIRED TO COMPLETELY ENCLOSE ASSEMBLY FOR EASY ACCESS.

9 VALVE BOX INSTALLATION
SCALE: NONE

Irrigation Consultant:
Russell D. Mitchell Associates, Inc.
2760 Camino Diablo
Walnut Creek, CA 94597
tel 925.939.3985 ♦ fax 925.932.5671
www.rmairrigation.com

IDENTIFICATION STAMP
DIV. OF THE STATE ARCHITECT
APP: 02-123848 INC: 01
REVIEWED FOR
SS ☑ FLS ☑ ACS ☑
DATE: 05/21/2026

LPA
ARCHITECTURE ENGINEERING INTERIOR DESIGN
LANDSCAPE ARCHITECTURE PLANNING
949-261-1001 Office
LPADesignStudios.com
5301 California Avenue, Suite 100
Irvine, California 92617

LICENSED LANDSCAPE ARCHITECT
NA DOROSHIMO TOM
04/02/26
10/31/2026
RENEWAL DATE
STATE OF CALIFORNIA

This document and all other project documents, ideas, aesthetics and designs incorporated therein are instruments of service. All project documents are copyright protected, are the property of LPA, Inc. (LPA) and cannot be lawfully used in whole or in part for any project or purpose except as set forth in the contractual agreement between LPA and its Client. The unauthorized disclosure and/or use of the project documents (including the creation of derivative works), may give rise to liability for copyright infringement, unlawful disclosure, use or misappropriation of property rights held by LPA. The unauthorized use of the project documents will give rise to the recovery of monetary losses and damages including attorney fees and costs for which th unauthorized user will be held liable.
Project documents describe the design intent of the work and are not a representation of as-built or existing conditions. LPA is not responsible for any discrepancies between the project documents and the existing conditions.

© LPA, Inc.

ELKHORN ELEMENTARY SCHOOL
CAMPUS MODERNIZATION INCREMENT 1

10505 DAVIS ROAD, STOCKTON, CA 95290

Developed for
LODI UNIFIED SCHOOL DISTRICT

Revision	Date

Submittal	Date
100% SCHEMATIC DESIGN	08/29/2025
DSA SUBMITTAL	12/18/2025

Job Number	3194201
Checked By	AW, EW
Scale	AS NOTED

IRRIGATION DETAILS

1L6.04

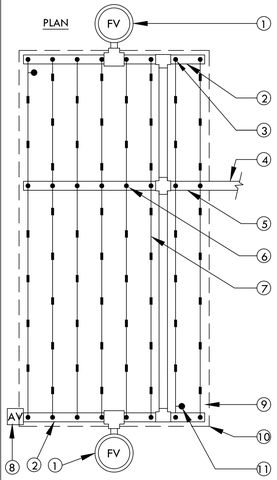

1. FLUSH VALVE PLUMBED TO FLUSH MANIFOLD AT LOW POINT
2. 1" FLEXIBLE PVC IPS HOSE FLUSH MANIFOLD.
3. MANIFOLD-TO-ELBOW CONNECTION (TYP).
4. PVC LATERAL LINE FROM VALVE. MINIMUM SIZE TO BE 1" UNLESS OTHERWISE NOTED.
5. PVC SUPPLY MANIFOLD. EXTEND TO END OF ZONE/EXHAUST HEADER.
6. MANIFOLD-TO-TEE CONNECTION.
7. DRIPLINE LATERAL.
8. AIR/VACUUM RELIEF PLUMBED TO PVC EXHAUST. INSTALL AT HIGH POINT.
9. PERIMETER LATERALS 2" [50mm] TO 4" [100mm] FROM EDGE.
10. AREA PERIMETER.
11. DRIPLINE OPERATION INDICATOR LOCATED AT THE ENDS OF EACH DRIPLINE ZONE.

NOTE:
1. THE TOTAL LENGTH OF ALL INTERCONNECTED DRIP LINE OFF A SINGLE PVC SUPPLY LINE CONNECTION OR A SINGLE RUN OF DRIPLINE SHALL NOT EXCEED 300 FT.
2. INSTALL DRIPLINE 2-4" BELOW GRADE AND STAKE DOWN EVERY 4' OR AS REQUIRED.

1 RAIN BIRD XFCV CENTER FEED LAYOUT
SCALE: NONE

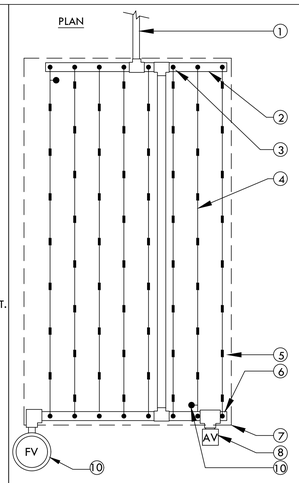

1. PVC LATERAL LINE FROM VALVE. MINIMUM SIZE TO BE 1" UNLESS OTHERWISE NOTED.
2. PVC FLUSH MANIFOLD. MINIMUM SIZE TO BE 1" UNLESS OTHERWISE NOTED.
3. MANIFOLD-TO-ELBOW CONNECTION (TYP).
4. DRIPLINE LATERAL.
5. PERIMETER LATERALS 2" [50mm] TO 4" [100mm] FROM EDGE.
6. 1" FLEXIBLE PVC IPS HOSE FLUSH MANIFOLD.
7. AREA PERIMETER.
8. AIR/VACUUM RELIEF PLUMBED TO PVC EXHAUST. INSTALL AT HIGH POINT.
9. DRIP OPERATION INDICATOR LOCATED AT THE ENDS OF EACH DRIPLINE ZONES.
10. AUTOMATIC FLUSH VALVE PLUMBED TO FLUSH MANIFOLD AT LOW POINT.

NOTE:
1. THE TOTAL LENGTH OF ALL INTERCONNECTED DRIP LINE OFF A SINGLE PVC SUPPLY LINE CONNECTION OR A SINGLE RUN OF DRIPLINE SHALL NOT EXCEED 300 FT.
2. INSTALL DRIPLINE 2-4" BELOW GRADE AND STAKE DOWN EVERY 4' OR AS REQUIRED.

2 RAIN BIRD XFCV END FEED LAYOUT
SCALE: NONE

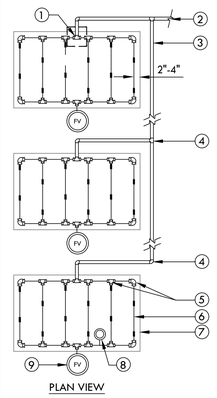

PLAN VIEW

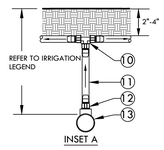

INSET A

1. PVC TO DRIPLINE TEE CONNECTION. REFER TO INSET A.
2. PVC LATERAL LINE FROM VALVE. MINIMUM SIZE TO BE 1". SIZE AS FOLLOWS:
   1" = 0-12 GPM
   1.25 = 13-20 GPM
3. 1" PVC SUPPLY. EXTEND TO EACH ISLAND PLANTER.
4. SCH. 40 PVC TEE OR ELBOW (SxSxS OR SxS).
4. 1" PVC SUPPLY. EXTEND TO ENDS OF ZONE/EXHAUST HEADER.
5. TWIST LOCK FITTING. TLF-ELBW-0600 OR TLF-TEE-0600.
6. RAIN BIRD XFCV DRIPLINE
7. AREA PERIMETER.
8. DRIPLINE OPERATION INDICATOR LOCATED AT THE ENDS OF EACH DRIPLINE ZONE. MIN. 2 PER VALVE.
9. FLUSH VALVE PLUMBED TO FLUSH MANIFOLD AT LOW POINT
10. TWIST LOCK FITTING. TLF-ELBW-0600 OR TLF-TEE0600.
11. 1/2" POLYETHYLENE TUBING: RAIN BIRD XFD SERIES BLANK TUBING.
12. TWIST LOCK FITTING: TLF-MPT6-0600.
13. SCH 40 PVC TEE (SxSxT) WITH 1/2" FPT OUTLET.

NOTE:
1. THE TOTAL LENGTH OF ALL INTERCONNECTED DRIP LINE OFF A SINGLE PVC SUPPLY LINE CONNECTION OR A SINGLE RUN OF DRIPLINE SHALL NOT EXCEED 300 FT.
2. INSTALL DRIPLINE 2"-4" BELOW GRADE AND STAKE DOWN EVERY 4' OR AS REQUIRED.

3 RAIN BIRD XFCV ISLAND LAYOUT
SCALE: NONE

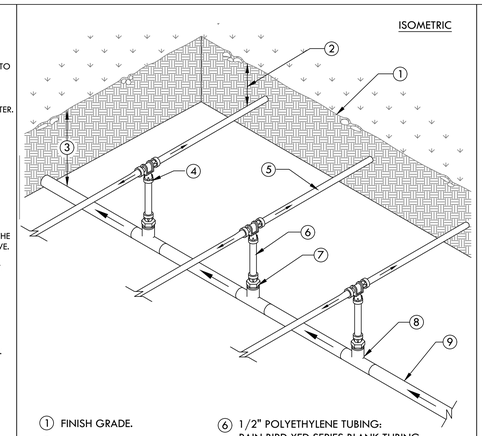

1. FINISH GRADE.
2. DEPTH OF TUBING PER IRRIGATION LEGEND.
3. DEPTH OF PVC LATERAL LINE PER IRRIGATION LEGEND.
4. TWIST LOCK TEE FITTING. TLF-TEE-0600.
5. RAIN BIRD XFCV DRIPLINE
6. 1/2" POLYETHYLENE TUBING: RAIN BIRD XFD SERIES BLANK TUBING.
7. TWIST LOCK FITTING: TLF-MPT6-0600.
8. SCH 40 PVC TEE WITH 1/2" FPT OUTLET.
9. PVC LATERAL LINE FROM REMOTE CONTROL VALVE.

4 RAIN BIRD XFCV CENTER FEED MANIFOLD
SCALE: NONE

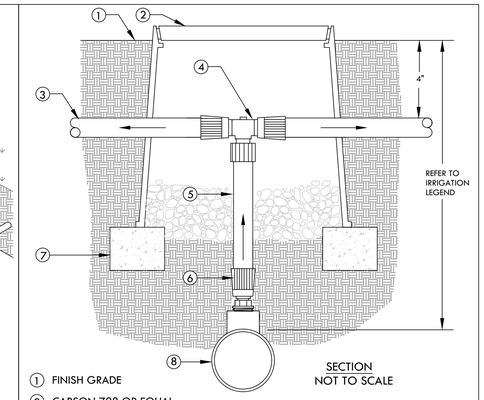

SECTION
NOT TO SCALE

1. FINISH GRADE
2. CARSON 708 OR EQUAL. COLOR: BLACK. USE PURPLE FOR RECYCLED WATER SYSTEMS.
3. DRIPLINE TUBING
4. RAIN BIRD TLF TEE-0600
5. BLANK 5/8" [16mm] POLY TUBING, LENGTH AS NECESSARY.
6. RAIN BIRD TLF-MPT6-0600 ADAPTER
7. BRICK (1 OF 2)
8. SCH 40 PVC TEE (SxSxT) WITH 1/2" FPT OUTLET.
8. PVC LATERAL LINE SUPPLY. MINIMUM SIZE TO BE 1" UNLESS SIZED DIFFERENTLY ON DRAWINGS. USE SCH 40 PVC 1"x1"x1/2" TEE OR 90° ELBOW.

NOTE:
USE ONLY WHEN THE TOTAL LENGTH OF DRIP LINE SERVICED FROM THIS PVC CONNECTION IS LESS THAN 300 FT.

5 DRIPLINE TO PVC CONNECTION-SINGLE SOURCE DRIP AREAS ONLY
SCALE: NONE

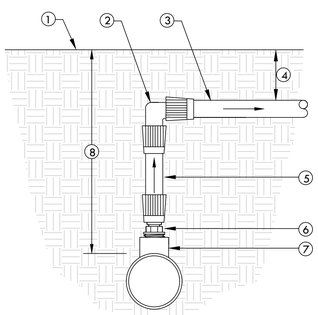

SECTION/ELEVATION
NOT TO SCALE

1. FINISH GRADE
2. RAIN BIRD TWIST LOCK ELBOW (TLF-ELBW-0600)
3. DRIPLINE TUBING
4. DEPTH OF TUBING PER IRRIGATION LEGEND.
5. BLANK 5/8" [16mm] POLY TUBING, LENGTH AS NECESSARY.
6. RAIN BIRD TLF-MPT6-0600 ADAPTER
7. SCH 40 PVC TEE (SxSxT) WITH 1/2" FPT OUTLET.
8. DEPTH OF PVC LATERAL LINE PER IRRIGATION LEGEND

6 DRIPLINE MANIFOLD TO ELBOW CONNECTION
SCALE: NONE

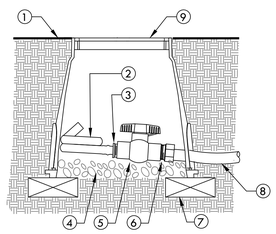

NOTE:
ALLOW A MINIMUM 18" OF DRIPLINE HOSE IN VALVE BOX IN ORDER TO DIRECT FLUSHED WATER OUTSIDE VALVE BOX.

1. FINISH GRADE
2. 1/2" POLYETHYLENE TUBING: RAIN BIRD XFD SERIES BLANK TUBING. MIN. 18" IN LENGTH.
3. TWIST LOCK MALE ADAPTER. TLF-MPT6-0600.
4. PEA GRAVEL SUMP (4" DEEP).
5. 1/2" SCH. 40 THREADED BALL VALVE.
6. 1/2" SCH. 40 MALE ADAPTER.
7. BRICK. 2 TOTAL.
8. 1/2" IPS PVC HOSE FROM DRIPLINE OR EXHAUST HEADER.
9. 6" ROUND PLASTIC VALVE BOX.

7 DRIPLINE-FLUSH POINT
SCALE: NONE

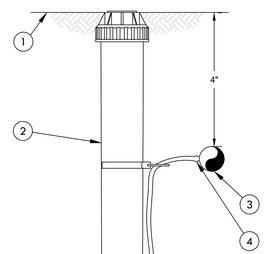

NOTE:
USE XERIMAN TOOL XM-TOOL TO INSERT BARB TRANSFER FITTING DIRECTLY INTO DRIPLINE TUBING.

1. FINISH GRADE
2. MICRO-SPRAY POP-UP: RAIN BIRD XERI-POP XP-600X WITH 4-VAN NOZZLE
3. SUB-SURFACE DRIPLINE
4. 1/4" BARB TRANSFER FITTING: RAIN BIRD XBFCONN
5. 1/4" DISTRIBUTION TUBING: RAIN BIRD XQ TUBING (LENGTH AS REQUIRED)

8 DRIPLINE INDICATOR
SCALE: NONE
DET: --------

Irrigation Consultant:
Russell D. Mitchell Associates, Inc.
2760 Camino Diablo
Walnut Creek, CA 94597
tel 925.939.3985 ♦ fax 925.932.5671
www.rmairrigation.com

IDENTIFICATION STAMP
DIV. OF THE STATE ARCHITECT
APP: 02-123848 INC: 01
REVIEWED FOR
SS ☑ FLS ☑ ACS ☑
DATE: 05/21/2026

LPA
ARCHITECTURE ENGINEERING INTERIOR DESIGN
LANDSCAPE ARCHITECTURE PLANNING
949-261-1001 Office
LPADesignStudios.com
5301 California Avenue, Suite 100
Irvine, California 92617

LICENSED LANDSCAPE ARCHITECT
YASHONDHA SHIMOTONO
04/02/26
10/31/2026
LICENSE EXPIRATION DATE
STATE OF CALIFORNIA

This document and all other project documents, ideas, aesthetics and designs incorporated therein are instruments of service. All project documents are copyright protected, are the property of LPA, Inc. (LPA) and cannot be lawfully used in whole or in part for any project or purpose except as set forth in the contractual agreement between LPA and its Client. The unauthorized disclosure and/or use of the project documents (including the creation of derivative works), may give rise to liability for copyright infringement, unlawful disclosure, use or misappropriation of property rights held by LPA. The unauthorized use of the project documents will give rise to the recovery of monetary losses and damages including attorney fees and costs for which th unauthorized user will be held liable.
Project documents describe the design intent of the work and are not a representation of as-built or existing conditions. LPA is not responsible for any discrepancies between the project documents and the existing conditions.

© LPA, Inc.

ELKHORN ELEMENTARY SCHOOL
CAMPUS MODERNIZATION INCREMENT 1

10505 DAVIS ROAD, STOCKTON, CA 95290

Developed for
LODI UNIFIED SCHOOL DISTRICT

Revision	Date

Submittal	Date
100% SCHEMATIC DESIGN	08/29/2025
DSA SUBMITTAL	12/18/2025

Job Number	3194201
Checked By	AW, EW
Scale	AS NOTED

IRRIGATION DETAILS

1L6.05

WATER USAGE CALCULATIONS

WATER USE ESTIMATION & IRRIGATION SCHEDULE - CONTROLLER C

WATER TYPE	POTABLE
CITY	Stockton
ETO	54.4
DATE	12/8/2025

Nearest City to project with published ET data

REGULAR LANDSCAPE AREAS

STATION/HYDROZONE	GPM	AREA (sq.ft) (HA)	WATER USE TYPE (LW=LOW, MW=MOD, HW=HIGH)	PLANT TYPE	IRRIGATION TYPE	PLANT FACTOR (PF)	IRRIGATION EFFICIENCY (IE)	PRECIP. RATE/ APPLICATION RATE (IN/HR)	ETAF (PF/IE)	CYCLES PER DAY	DAYS PER WEEK	JAN	FEB	MAR	APR	MAY	JUNE	JULY	AUG	SEP	OCT	NOV	DEC	ETWU (GALLONS PER YEAR)	PERCENTAGE OF LANDSCAPE
												MONTHLY ETO													
												1.2	2.0	3.4	4.9	6.7	7.9	8.5	7.5	5.7	3.7	1.8	1.1		
												TOTAL RUN TIME IN MINUTES PER DAY													
C-1	2	320	MW	TREE MW	BUBBLER (TREE) 0.25 GPM	0.5	0.81	0.43	0.617	2	3	0.0	0.0	23.0	32.0	44.0	52.0	56.0	49.0	37.0	24.0	12.0	0.0	6,662	1%
C-2	8	843	LW	SHRUB GC LW	DRIP LINE 12"	0.3	0.81	0.9	0.370	2	2	0.0	0.0	10.0	14.0	19.0	23.0	24.0	21.0	16.0	11.0	6.0	0.0	10,531	3%
C-3	8	838	LW	SHRUB GC LW	DRIP LINE 12"	0.3	0.81	0.9	0.370	2	2	0.0	0.0	10.0	14.0	19.0	23.0	24.0	21.0	16.0	11.0	6.0	1.0	10,468	3%
C-4	16	1592	LW	BIOSWALE LW	ROTORS 180/90 MID	0.3	0.75	0.75	0.400	2	2	0.0	0.0	13.0	18.0	25.0	29.0	31.0	28.0	21.0	14.0	7.0	0.0	21,478	6%
C-5	8	1335	LW	BIOSWALE LW	ROTORS 180/90 MID	0.3	0.75	0.75	0.400	2	2	0.0	0.0	13.0	18.0	25.0	29.0	31.0	28.0	21.0	14.0	7.0	0.0	18,011	5%
C-6	6	932	HW	TURF HW	ROTORS 180/90 MID	0.8	0.75	0.75	1.067	2	4	0.0	0.0	17.0	24.0	33.0	39.0	41.0	37.0	28.0	18.0	9.0	1.0	33,530	3%
C-7	8	732	HW	TURF HW	ROTORS 360 MID	0.8	0.75	0.38	1.067	2	4	0.0	0.0	33.0	47.0	64.0	76.0	81.0	72.0	55.0	36.0	18.0	0.0	26,335	3%
C-8	12	1227	HW	TURF HW	ROTORS 180/90 MID	0.8	0.75	0.75	1.067	2	4	0.0	0.0	17.0	24.0	33.0	39.0	41.0	37.0	28.0	18.0	9.0	0.0	44,143	4%
C-9	3	400	LW	TREE LW	BUBBLER (TREE) 0.25 GPM	0.3	0.81	0.43	0.370	2	2	0.0	0.0	20.0	29.0	40.0	47.0	50.0	44.0	34.0	22.0	11.0	0.0	4,997	1%
C-10	9	1018	LW	SHRUB GC LW	DRIP LINE 12"	0.3	0.81	0.9	0.370	2	2	0.0	0.0	10.0	14.0	19.0	23.0	24.0	21.0	16.0	11.0	6.0	1.0	12,717	4%
C-11	15	1562	LW	SHRUB GC LW	DRIP LINE 12"	0.3	0.81	0.9	0.370	2	2	0.0	0.0	10.0	14.0	19.0	23.0	24.0	21.0	16.0	11.0	6.0	0.0	19,512	5%
C-12	1	160	LW	SHRUB GC LW	BUBBLER (TREE) 0.25 GPM	0.3	0.81	0.43	0.370	2	2	0.0	0.0	20.0	29.0	40.0	47.0	50.0	44.0	34.0	22.0	11.0	0.0	1,999	1%
C-13	6	645	LW	SHRUB GC LW	DRIP LINE 12"	0.3	0.81	0.9	0.370	2	2	0.0	0.0	10.0	14.0	19.0	23.0	24.0	21.0	16.0	11.0	6.0	1.0	8,057	2%
C-14	16	1850	LW	SHRUB GC LW	DRIP LINE 12"	0.3	0.81	0.9	0.370	2	2	0.0	0.0	10.0	14.0	19.0	23.0	24.0	21.0	16.0	11.0	6.0	0.0	23,110	6%
C-15	3	400	MW	SHRUB GC MW	BUBBLER (TREE) 0.25 GPM	0.5	0.81	0.43	0.617	2	3	0.0	0.0	23.0	32.0	44.0	52.0	56.0	49.0	37.0	24.0	12.0	0.0	8,328	1%
C-16	18	2051	LW	SHRUB GC LW	DRIP LINE 12"	0.3	0.81	0.9	0.370	2	2	0.0	0.0	10.0	14.0	19.0	23.0	24.0	21.0	16.0	11.0	6.0	1.0	25,621	7%
C-17	14	1541	LW	SHRUB GC LW	DRIP LINE 12"	0.3	0.81	0.9	0.370	2	2	0.0	0.0	10.0	14.0	19.0	23.0	24.0	21.0	16.0	11.0	6.0	0.0	19,250	5%
C-18	21	1088	LW	BIOSWALE LW	SPRAY	0.3	0.75	1.6	0.400	2	2	0.0	0.0	6.0	9.0	12.0	14.0	15.0	13.0	10.0	7.0	4.0	0.0	14,678	4%
C-19	16	3278	HW	TURF HW	ROTORS 180/90 MID	0.8	0.75	0.75	1.067	2	4	0.0	0.0	17.0	24.0	33.0	39.0	41.0	37.0	28.0	18.0	9.0	0.0	117,931	11%
C-20	30	3652	HW	TURF HW	ROTORS 360 MID	0.8	0.75	0.38	1.067	2	4	0.0	0.0	33.0	47.0	64.0	76.0	81.0	72.0	55.0	36.0	18.0	1.0	131,386	13%
C-21	19	3146	HW	TURF HW	ROTORS 180/90 MID	0.8	0.75	0.75	1.067	2	4	0.0	0.0	17.0	24.0	33.0	39.0	41.0	37.0	28.0	18.0	9.0	0.0	113,182	11%
	TOTAL	28,610																					TOTAL	671,926	100%

SPECIAL LANDSCAPE AREAS

HYDROZONE #	HYDROZONE NAME	AREA (sq.ft) (HA)	Percentage of Landscape
C-6,C-7,C-8,C-19,C-20,C-21	TURFF	12967	45%

THE IRRIGATION VALVE SCHEDULE SHOWN ABOVE IS INTENDED TO BE USED AS A GUIDELINE ONLY AND INDICATES THE APPROXIMATE RUN TIMES IN MINUTES FOR EACH VALVE BASED ON ESTIMATED WEEKLY WATER REQUIREMENTS FOR ESTABLISHED PLANT MATERIAL. THE TIMES SHOWN ARE APPROXIMATE AND HAVE BEEN DEVELOPED FROM LOCAL AND CURRENT AVERAGES FOR EVAPOTRANSPIRATION, AND REFLECTTHE WATER REQUIREMENTS OF THE PLANT MATERIAL BASED ON PLANT TYPE AND THE APPROXIMATE PRECIPITATION OR APPLICATION RATES OF THE IRRIGATION SYSTEM TYPE. ACTUAL RUN TIMES MAY BE DIFFERENT DEPENDING ON A VARIETY OF FACTORS INCLUDING TOPOGRAPHY, SOIL STRUCTURE, SUN AND WIND EXPOSURE, WEATHER, ACTUAL PLANT WATER REQUIREMENTS, OVERALL PRECIPITATION RATE OF ZONE, ETC.

MAWA	GALLONS/YR	674,774
	ACRE FEET/YR	2.07
	HCF/YR	902.10
ETWU	GALLONS/YR	671,926
	ACRE FEET/YR	2.06
	HCF/YR	898.30

SITE IRRIGATION EFFICIENCY	SITE PLANT FACT0R	MAWA COMPLIANT
77.4%	0.53	YES

ETAF Calculations	
REGULAR LANDSCAPE AREAS	
TOTAL ETAF x AREA	19,922
TOTAL AREA	28,610
AVG. ETAF	69.63%

MAWA FORMULA

MAXIMUM APPLIED WATER ALLOWANCE (MAWA) GALLONS PER YEAR

MAWA = (ETo)(0.62)[(LA x 0.45) + (0.55 x SLA)]

ETo = REFERENCE EVAPOTRANSPIRATION

0.45= ET ADJUSTMENT FACTOR

LA=LANDSCAPED AREA (SQUARE FEET)
0.62 = CONVERSION FACTOR (GALLONS/SQ.FT/YR)

ETWU FORMULA

ESTIMATED TOTAL WATER USE (ETWU) GALLONS PER YEAR

ETWU= ((ETO)(.62)(ETAF x LA))

ETo = REFERENCE EVAPOTRANSPIRATION

PF = PLANT FACTOR FOR HYDROZONES

HA = HYDROZONE AREA (SQ.FT)
0.62 = CONVERSION FACTOR (GALLONS/SQ.FT/YR)

IE = IRRIGATION EFFICIENCY (0.81)-BUBBLER/DRIP

IE = IRRIGATION EFFICIENCY (0.75)-ROTORS/SPRAY

Irrigation Consultant:
Russell D. Mitchell Associates, Inc.
2760 Camino Diablo
Walnut Creek, CA 94597
tel 925.939.3985 ♦ fax 925.932.5671
www.rmairrigation.com

IDENTIFICATION STAMP
DIV. OF THE STATE ARCHITECT
APP: 02-123848 INC: 01
REVIEWED FOR
SS ☑ FLS ☑ ACS ☑
DATE: 05/21/2026

LPA
ARCHITECTURE ENGINEERING INTERIOR DESIGN
LANDSCAPE ARCHITECTURE PLANNING
949-261-1001 Office
LPADesignStudios.com
5301 California Avenue, Suite 100
Irvine, California 92617

LICENSED LANDSCAPE ARCHITECT
ALEXANDER WILLIAM SCHIMOTOMAI
04/02/26
10/31/2026
LICENSE EXPIRATION DATE
STATE OF CALIFORNIA

This document and all other project documents, ideas, aesthetics and designs incorporated therein are instruments of service. All project documents are copyright protected, are the property of LPA, Inc. (LPA) and cannot be lawfully used in whole or in part for any project or purpose except as set forth in the contractual agreement between LPA and its Client. The unauthorized disclosure and/or use of the project documents (including the creation of derivative works), may give rise to liability for copyright infringement, unlawful disclosure, use or misappropriation of property rights held by LPA. The unauthorized use of the project documents will give rise to the recovery of monetary losses and damages including attorney fees and costs for which th unauthorized user will be held liable.
Project documents describe the design intent of the work and are not a representation of as-built or existing conditions. LPA is not responsible for any discrepancies between the project documents and the existing conditions.

© LPA, Inc.

ELKHORN ELEMENTARY SCHOOL
CAMPUS MODERNIZATION INCREMENT 1

10505 DAVIS ROAD, STOCKTON, CA 95290

Developed for
LODI UNIFIED SCHOOL DISTRICT

Revision	Date

Submittal	Date
100% SCHEMATIC DESIGN	08/29/2025
DSA SUBMITTAL	12/18/2025

Job Number	3194201
Checked By	AW, EW
Scale	AS NOTED

WATER USAGE CALCULATIONS

1L6.06

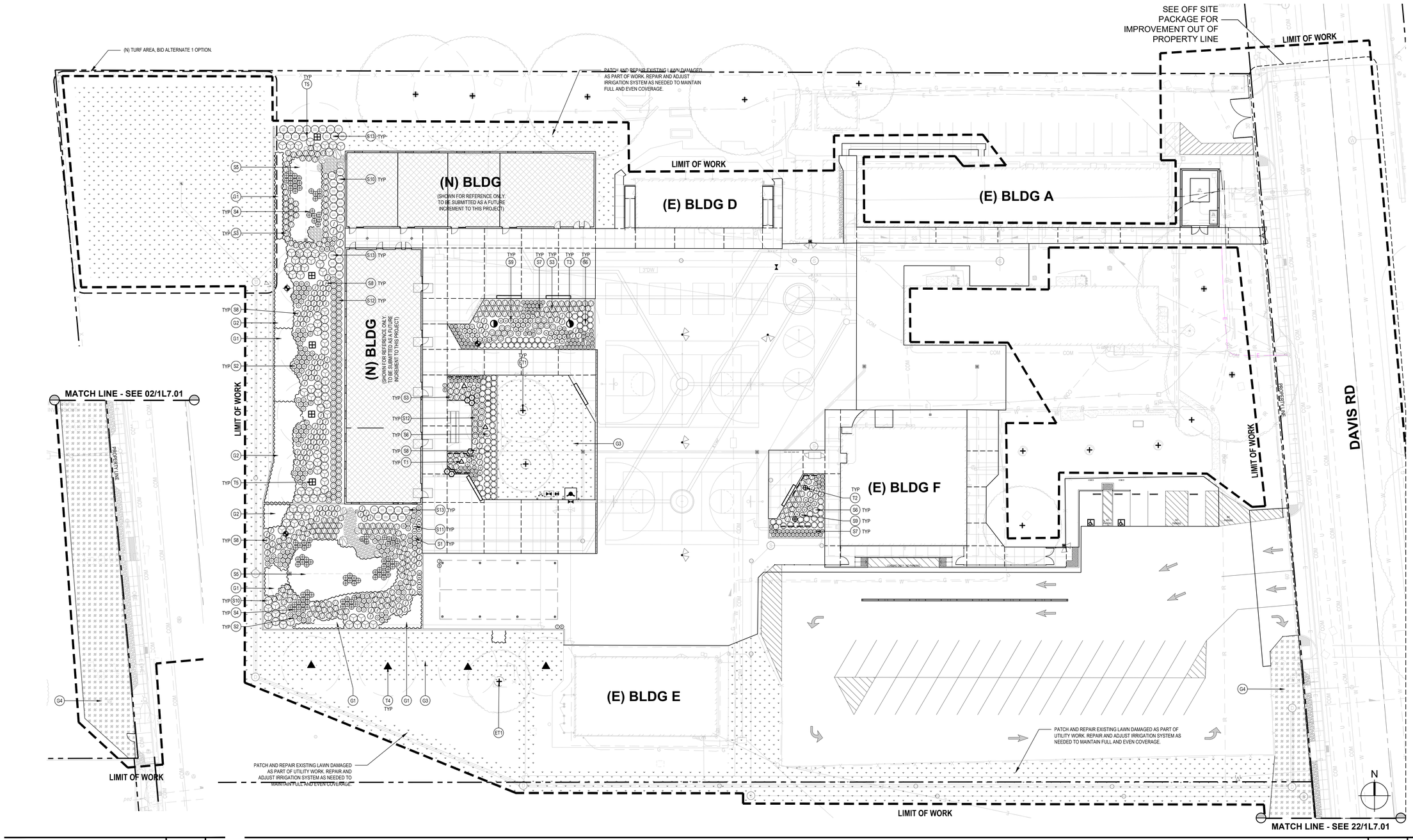

PLANTING PLAN | 1" = 20'-0" | 22

PLANTING PLAN | 1" = 20'-0" | 02

SHADE CALCULATIONS (CGBC 5.106.12)

	REQUIRED SHADE	SHADE PROVIDED
LANDSCAPE AREA: 22,663	20%	8,913 SF / 39.3%
LANDSCAPE AREA (BID ALTERNATE 1): 32,830	20%	8,913 SF / 27.1%
HARDSCAPE AREA (NOT INCLUDING PLAY COURTS): 22,122	20%	6,258 / 28.3%

GROUNDCOVER LIST

G1		AS REQ'D	ARCTOSTAPHYLOS 'EMERALD CARPET/ EMERALD CARPET' MANZANITA	L	1 GAL/ 42" O.C.	09/ 1L7.02
G2		AS REQ'D	MYOPORUM PARVIFOLIUM 'PUTAH CREEK'/ MYOPORUM	L	1 GAL/ 42" O.C.	09/ 1L7.02

TURF LIST

G3		AS REQ'D	90/10 MIX BOLERO PLUS MIX BY DELTA BLUEGRASS	HIGH	SOD	SEE SPECS
G4		AS REQ'D	NATIVE WILDFLOWER MIX	L	SEED MIX	SEE SPECS

MISCELLANEOUS SYMBOLS

	LINEAR ROOT BARRIER	03/ 1L7.02
	MULCHED AREA	
	SOIL SAMPLE LOCATION (3 TOTAL)	

SHRUB / VINE LIST

S1		AS REQ'D	ACHILLEA MILLEFOLIUM 'PAPRIKA'/ YARROW	L	5 GAL/ PER PLAN	09/ 1L7.02
S2		AS REQ'D	ASCLEPIAS CALIFORNICA/ CALIFORNIA MILKWEED	L	5 GAL/ PER PLAN	09/ 1L7.02
S3		AS REQ'D	CAREX PRAEGRACILIS/ CLUSTERED FIELD SEDGE	L	5 GAL/ PER PLAN	09/ 1L7.02
S4		AS REQ'D	CHONDROPETALUM 'TECTORUM/ CAPE RUSH	L	5 GAL/ PER PLAN	09/ 1L7.02
S5		AS REQ'D	JUNCUS PATENS/ CALIFORNIA GRAY RUSH	L	1 GAL/ PER PLAN	09/ 1L7.02
S6		AS REQ'D	LANTANA X 'NEW GOLD'/ NEW GOLD LANTANA	L	5 GAL/ PER PLAN	09/ 1L7.02
S7		AS REQ'D	LAVANDLA ANGUSTIFOLIA/ ENGLISH LAVENDER	L	5 GAL/ PER PLAN	09/ 1L7.02
S8		AS REQ'D	LOMANDRA LONGIFOLIA 'BREEZE'/ DWARF MAT RUSH	L	1 GAL/ PER PLAN	09/ 1L7.02
S9		AS REQ'D	MUHLENBERGIA CAPILLARIS/ PINK MUHLY	L	5 GAL/ PER PLAN	09/ 1L7.02
S10		AS REQ'D	MUHLENBERGIA RIGENS/ DEER GRASS	L	5 GAL/ PER PLAN	09/ 1L7.02
S11		AS REQ'D	PENSTEMON H. 'MARGARITA BOP'/ MARGARITA BOP BEARDTONGUE	L	5 GAL/ PER PLAN	09/ 1L7.02
S12		AS REQ'D	RHAPHIOLEPIS UMBELLATA MINOR/ DWARF YEDDO HAWTHORN	M	5 GAL/ PER PLAN	09/ 1L7.02
S13		AS REQ'D	RHAMNUS CALIFORNICA 'MOUND SAN BRUNO'/ MOUND SAN BRUNO COFFEEBERRY	L	15 GAL/ PER PLAN	09/ 1L7.02

PLANTING LEGEND

TREE LIST (NCN.)- NO COMMON NAME (*)- UNLESS NOTED ON PLAN

REF.	SYM.	QTY.	BOTANICAL NAME/ COMMON NAME	WUCOLS	SIZE/ SPACING	COMMENTS/ DET
T1		3	CERCIS OCCIDENTALIS/ WESTERN REDBUD	L	24" BOX/ PER PLAN	STANDARD/ 01/1L7.02
T2		2	CHILOPSIS LINEARIS/ DESERT WILLOW	L	24" BOX/ PER PLAN	STANDARD/ 01/1L7.02
T3		2	QUERCUS AGROFOLIA/ COAST LIVE OAK	L	36" BOX/ PER PLAN	STANDARD/ 01/1L7.02
T4		4	QUERCUS SHUMARDII/ SHUMARD RED OAK	M	36" BOX/ PER PLAN	STANDARD/ 01/1L7.02
T5		4	ZELKOVA SERRATA/ JAPANESE ZELKOVA	M	36" BOX/ PER PLAN	STANDARD/ 01/1L7.02
ET1			EXISTING TREE		PROTECT AND PRESERVE	

IDENTIFICATION STAMP
DIV. OF THE STATE ARCHITECT
APP: 02-123848 INC: 01
REVIEWED FOR
SS ☑ FLS ☑ ACS ☑
DATE: 05/21/2026

LPA

ARCHITECTURE ENGINEERING INTERIOR DESIGN
LANDSCAPE ARCHITECTURE PLANNING

949-261-1001 Office
LPADesignStudios.com
5301 California Avenue, Suite 100
Irvine, California 92617

LICENSED LANDSCAPE ARCHITECT
04/02/26
10/31/2026
RENEWAL DATE
STATE OF CALIFORNIA

This document and all other project documents, ideas, aesthetics and designs incorporated therein are instruments of service. All project documents are copyright protected, are the property of LPA, Inc. (LPA) and cannot be lawfully used in whole or in part for any project or purpose except as set forth in the contractual agreement between LPA and its Client. The unauthorized disclosure and/or use of the project documents (including the creation of derivative works), may give rise to liability for copyright infringement, unlawful disclosure, use or misappropriation of property rights held by LPA. The unauthorized use of the project documents will give rise to the recovery of monetary losses and damages including attorney fees and costs for which the unauthorized user will be held liable.
Project documents describe the design intent of the work and are not a representation of as-built or existing conditions. LPA is not responsible for any discrepancies between the project documents and the existing conditions.

© LPA, Inc.

ELKHORN ELEMENTARY SCHOOL
CAMPUS MODERNIZATION INCREMENT 1

10505 DAVIS ROAD, STOCKTON, CA 95290

Developed for
LODI UNIFIED SCHOOL DISTRICT

Revision	Date

Submittal	Date
100% SCHEMATIC DESIGN	08/29/2025
DSA SUBMITTAL	12/18/2025

Job Number	3194201
Checked By	AW, EW
Scale	AS NOTED

PLANTING PLAN

1L7.01

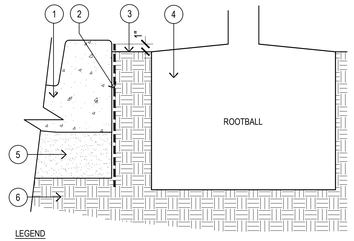

LEGEND

1. CONCRETE CURB, GUTTER, OR SIDEWALK.
2. LINEAR ROOT BARRIER BY 'DEEP ROOT'. SEE PLANTING PLAN. MODEL # UB24-2
3. FINISH GRADE.
4. ADJACENT ROOTBALL. VERIFY THE EXACT LOCATION AND PROTECT AT ALL TIMES.
5. BASE MATERIAL FROM ADJACENT HARDSCAPE.
6. COMPACTED SUBGRADE FROM ADJACENT HARDSCAPE.

NOTE:
A. VERIFY LOCATION OF ALL UNDERGROUND UTILITIES PRIOR TO INSTALLATION.

07 LINEAR ROOT BARRIER | 1 1/2"=1'-0" | 03

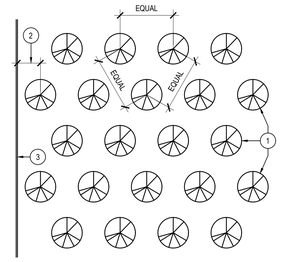

LEGEND:

1. LOCATE PLANTS WITH EQUAL SPACING AS INDICATED ON PLAN (TRIANGULAR SPACING).
2. 1/2 ON CENTER SPACING.
3. PAVING, BUILDING, OR HEADER SHOWING PLANTING AREA LIMIT.

TRIANGULAR SPACING | 1/4" = 1'-0" | 10

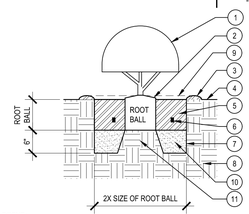

LEGEND:

1. 1 TO 15 GALLON SHRUB; REFER TO PLANTING PLAN.
2. SET CROWN OF ROOTBALL 1" ABOVE FINISH GRADE AND SLOPE SOIL AWAY FROM ROOTBALL. ADJUST HEIGHT OF PLANTING TO ACCOMODATE SETTLING DUE TO SOIL TYPES.
3. WATER BASIN. 4" MIN. FOR 5 GAL. & LARGER. 2" MIN FOR 1 GAL.
4. FINISH GRADE
5. AMENDED BACKFILL; SEE SPECS FOR MIX.
6. PLANT TABLET; SEE SPECS.
7. SCARIFY SIDES AND BOTTOM OF PLANTING PIT.
8. EXISTING SOIL.
9. 3" MULCH, MAINTAIN CONSTANTLY. SEE SPECS.
10. COMPACTED BACKFILL; SEE SPECS. PUDDLE AND SETTLE PRIOR TO SETTING SHRUB.
11. UNDISTURBED EXISTING SOIL TO FORM PEDESTAL. REPLACE WITH COMPACTED NATURAL SOIL IF HARDPAN EXISTS.

NOTE:
A. FOR SHRUB SPACING SEE 10
B. WHERE OCCURS AT A SLOPE SEE 07

SHRUB PLANTING DETAIL | 3/4" = 1'-0" | 09

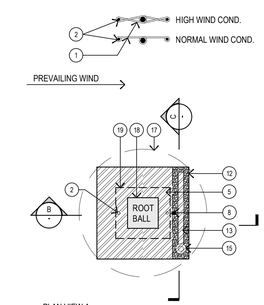

PLAN VIEW A

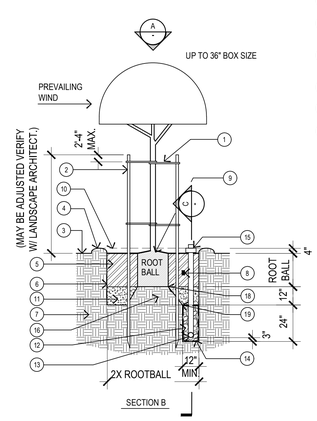

SECTION B

LEGEND

1. 32" BLACK VIT "CINCH TIES". ATTACH W/ TWO ROOFING NAILS. FOR 36" BOX AND LARGER, USE 36" BLACK VIT "TWIST BRACE", SEE PLAN VIEW. FOR HIGH WIND CONDITIONS: VIT TWIST BRACES ATTACH W/ TWO ROOFING NAILS. TYPICAL TWO EACH SIDE. SEE PLAN VIEW.
2. 2" DIA. X 12' LODGE POLE PINE STAKES. 3" DIA X 12' LODGE POLE PINE STAKES FOR 36" BOX AND LARGER TREES. (HEIGHT OF STAKE -8'-10'-12' SHOULD BE ADJUSTED BASED ON CONTAINER SIZE, HEIGHT OF TREE, AND GROWTH RATE) CUT STAKES TO MATCH HT. AS DIRECTED BY LANDSCAPE ARCHITECT.
3. FINISH GRADE
4. WATER BASIN. 4" MIN. DEPTH FOR 5 GAL. & LARGER IN LAWN AREAS AND AS DIRECTED BY LANDSCAPE ARCHITECT.
5. AMENDED BACKFILL. SEE SPECIFICATIONS FOR MIX AND PIT SIZE.
6. SCARIFY SIDES AND BOTTOM OF PLANTING PIT.
7. EXISTING SOIL.
8. PLANT TABLET. PER SPECS.
9. SET TOP OF ROOTBALL X" ABOVE SURROUNDING GRADE AND SLOPE FOR DRAINAGE. PROVIDE 2' DIA. MULCH RING AT TREES WITHIN TURF. ADJUST HEIGHT OF TREE PLANTING TO ACCOMMODATE SETTLING DUE TO SOIL TYPE.
10. 3" MULCH, MAINTAIN CONSTANTLY.
11. COMPACTED BACKFILL. PUDDLE AND SETTLE PRIOR TO SETTING TREE.
12. 12" WIDE TRENCH ALONG ONE SIDE. FILL WITH 3/4" DRAIN GRAVEL.
13. 4" PERFORATED DRAIN PIPE PLACED HORIZONTAL.
14. "MIRAFI" 140N FILTER FABRIC.
15. 4" NIBCO, BLACK - 'ABS' PLUG 4" NIBCO, BLACK - 'ABS' FEMALE RECIEVER NDS, WHITE 'PVC' ADAPTOR FOR CONNECTION FROM FEMALE RECIEVER TO PVC SOLID STAND PIPE
16. UNDISTURBED EXISTING SOIL TO FORM PEDESTAL AND PREVENT SETTLING. REPLACE WITH COMPACTED NATURAL SOIL IF HARDPAN EXISTS.
17. TREE CANOPY
18. BOTTOM OF ROOTBALL/ TOP OF PEDESTAL.
19. BASE OF PEDESTAL FOR TREE.

NOTE:
A. PROVIDE (2) 6" DIA. x 6' DEEP AUGER HOLES IF EXCAVATED HOLE DOES NOT DRAIN FASTER THAN 1" PER HOUR AS DETERMINED BY SOILS REPORT AND FIELD CONDITIONS.

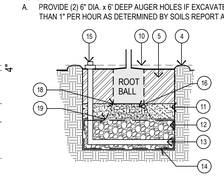

SECTION C

TREE STAKING AND PLANTING DETAIL | 1/4"=1'-0" | 01

IDENTIFICATION STAMP
DIV. OF THE STATE ARCHITECT
APP: 02-123848 INC: 01
REVIEWED FOR
SS ☑ FLS ☑ ACS ☑
DATE: 05/21/2026

LPA

ARCHITECTURE ENGINEERING INTERIOR DESIGN
LANDSCAPE ARCHITECTURE PLANNING

949-261-1001 Office

LPADesignStudios.com

5301 California Avenue, Suite 100
Irvine, California 92617

LICENSED LANDSCAPE ARCHITECT
IAN CONDRASHIMO TOM
No. 5595
04/02/26
10/31/2026
RENEWAL DATE
STATE OF CALIFORNIA

This document and all other project documents, ideas, aesthetics and designs incorporated therein are instruments of service. All project documents are copyright protected, are the property of LPA, Inc. (LPA) and cannot be lawfully used in whole or in part for any project or purpose except as set forth in the contractual agreement between LPA and its Client. The unauthorized disclosure and/or use of the project documents (including the creation of derivative works), may give rise to liability for copyright infringement, unlawful disclosure, use or misappropriation of property rights held by LPA. The unauthorized use of the project documents will give rise to the recovery of monetary losses and damages including attorney fees and costs for which the unauthorized user will be held liable.
Project documents describe the design intent of the work and are not a representation of as-built or existing conditions. LPA is not responsible for any discrepancies between the project documents and the existing conditions.

© LPA, Inc.

ELKHORN ELEMENTARY SCHOOL
CAMPUS MODERNIZATION INCREMENT 1

10505 DAVIS ROAD, STOCKTON, CA 95290

Developed for
LODI UNIFIED SCHOOL DISTRICT

Revision	Date

Submittal	Date
100% SCHEMATIC DESIGN	08/28/2025
DSA SUBMITTAL	12/18/2025

Job Number	3194201
Checked By	AW, EW
Scale	AS NOTED

PLANTING DETAILS

1L7.02

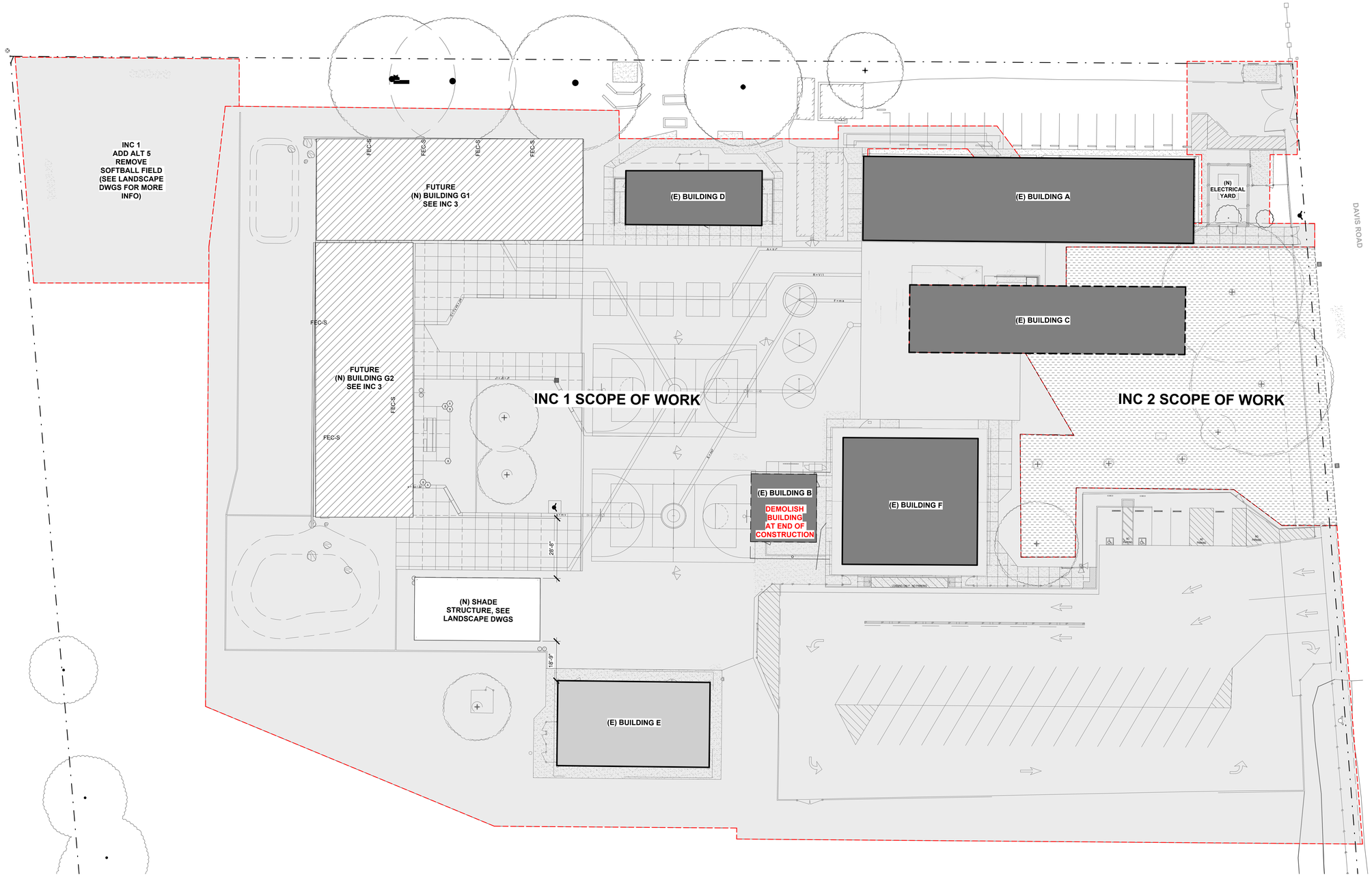

SITE PLAN - INC 1 | 1" = 20'-0" | 1A0.01 | 02

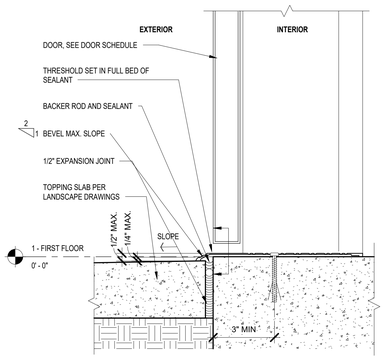

DOOR THRESHOLD - HM EXTERIOR | 3" = 1'-0" | 1A0.01 | 21

LEGEND

- (N) SHADE STRUCTURE - INC 1
- FOR REFERENCE: (E) BUILDING NOT UNDER SCOPE OF WORK
- FOR REFERENCE: RENOVATE (E) BUILDING SEE INC 2
- INC 1 SITE SCOPE OF WORK
- FOR REFERENCE: DEMOLISH (E) BUILDING - SEE INC 2
- FOR REFERENCE: INC 2 SITE SCOPE OF WORK
- FOR REFERENCE: (N) BUILDING - SEE INC 3
- IMAGINARY PROPERTY LINE
- PROPERTY LINE

GENERAL NOTES

1. FOR ADDITIONAL INFORMATION ON SITE SCOPE, REFER TO CIVIL AND LANDSCAPE DRAWINGS.
2. REPLACE EXTERIOR THRESHOLD WHERE SITE PAVING HAS BEEN REPLACED PER CIVIL DRAWINGS. SEE DETAIL 21/1A0.01

IDENTIFICATION STAMP
DIV. OF THE STATE ARCHITECT
APP: 02-123848 INC: 01
REVIEWED FOR
SS ☑ FLS ☑ ACS ☑
DATE: 05/21/2026

LPA
ARCHITECTURE ENGINEERING INTERIOR DESIGN
LANDSCAPE ARCHITECTURE PLANNING
916-287-2400 Office
LPADesignStudios.com
431 I Street, Suite 107
Sacramento, California 95814

LICENSED ARCHITECT
JULIAN WATT
C-40596
17 DEC 2022
RENEWAL DATE
STATE OF CALIFORNIA

This document and all other project documents, ideas, aesthetics and designs incorporated therein are instruments of service. All project documents are copyright protected, are the property of LPA, Inc. (LPA) and cannot be lawfully used in whole or in part for any project or purpose except as set forth in the contractual agreement between LPA and its Client. The unauthorized disclosure and/or use of the project documents (including the creation of derivative works), may give rise to liability for copyright infringement, unlawful disclosure, use or misappropriation of property rights held by LPA. The unauthorized use of the project documents will give rise to the recovery of monetary losses and damages including attorney fees and costs for which the unauthorized user will be held liable.
Project documents describe the design intent of the work and are not a representation of as-built or existing conditions. LPA is not responsible for any discrepancies between the project documents and the existing conditions.

© LPA, Inc.

ELKHORN ELEMENTARY SCHOOL
CAMPUS MODERNIZATION INCREMENT 1

10505 DAVIS ROAD, STOCKTON, CA
95209

Developed for
LODI UNIFIED SCHOOL DISTRICT

Revision	Date

Submittal	Date
100% SCHEMATIC DESIGN	08/29/2025
DSA SUBMITTAL	12/18/2025

Job Number	31942
Checked By	Checker
Scale	As indicated

SITE PLAN

1A0.01

ABBREVIATIONS

4S/DP	4" SQUARE BY 2 1/8" DEEP BOX
ACT	ACOUSTICAL CEILING TILE
ADA	AMERICAN WITH DISABILITIES ACT
AFF	ABOVE FINISH FLOOR
AFG	ABOVE FINISH GRADE
AWG	AMERICAN WIRE GAUGE
AMP, A	AMPERE
AIC	AMPERES INTERRUPTING CAPACITY (SYMMETRICAL)
AF/AT	AMP FRAME, AMP TRIP
AHJ	AUTHORITY HAVING JURISDICTION
AS/AF	AMP SWITCH, AMP FUSE
ATS	AUTOMATIC TRANSFER SWITCH
AVG	AVERAGE
BDF	BUILDING DISTRIBUTION FRAME
BR	BRANCH
BLDG	BUILDING
CEC	CALIFORNIA ELECTRICAL CODE
CIRC., CKT	CIRCUIT
CB	CIRCUIT BREAKER
CSFD	COMBINATION SMOKE FIRE DAMPER
C	CONDUIT
CO	CONDUIT ONLY, COMPLETE WITH PULLSTRING
CONN	CONNECTED
CPT	CONTROL POWER TRANSFORMER
CLCB	CURRENT LIMITING CIRCUIT BREAKER
CLF	CURRENT LIMITING FUSE
CT	CURRENT TRANSFORMER
(D)	EXISTING TO BE DEMOLISHED
DIA	DIAMETER
DISC	DISCONNECT
DIST	DISTRIBUTION
EC	ELECTRICAL CONTRACTOR
EMS	ENERGY MANAGEMENT CONTROL SYSTEM
EMT	ELECTRICAL METALLIC TUBING
ENT	ELECTRICAL NON-METALLIC TUBING
EWC	ELECTRIC WATER COLLER
EPO	EMERGENCY POWER OFF
E-O-L	END-OF-LINE CIRCUIT TERMINATOR
EF	EXHAUST FAN
E/G	EQUIPMENT GROUND (GREEN)
EP	EXPLOSION PROOF
(E)	EXISTING EQUIP TO REMAIN
(ER")	EXISTING EQUIP TO BE RELOCATED ("CORRESPONDS TO NEW LOCATION)
FT or '	FEET
FA	FIRE ALARM
FLA	FULL LOAD AMPS
GRD	GROUND
GFCI	GROUND FAULT CIRCUIT INTERRUPTER
GFP	GROUND FAULT PROTECTION
GEC	GROUNDING ELECTRODE CONDUCTOR
JBOX	JUNCTION BOX
K	DEGREE KELVIN
KCMIL	THOUSAND CIRCULAR MILS
KVA	KILOVOLT AMPERES
KW	KILOWATT
KWH	KILOWATT HOUR
HACR	HEATING AIR CONDITIONING REFRIGERATION
HOA	HAND-OFF-AUTO
HVAC	HEATING, VENTILATING AND AIR CONDITIONING
H, W, D, L	HEIGHT, WIDTH, DEPTH, LENGTH
HID	HIGH INTENSITY DISCHARGE
HP	HORSEPOWER
HPS	HIGH PRESSURE SODIUM
IN or "	INCHES
I/G	ISOLATED GROUND
IDF	INTERMEDIATE DISTRIBUTION FRAME
LCL	LONG CONTINUOUS LOAD
LF	LINEAR FEET
LTG, LTS	LIGHTING
LPS	LOW PRESSURE SODIUM
MAX	MAXIMUM
MDF	MAIN DISTRIBUTION FRAME
MOCP	MAXIMUM OVERCURRENT PROTECTION
MCB	MAIN CIRCUIT BREAKER
MLO	MAIN LUGS ONLY
MC	MECHANICAL CONTRACTOR
M	METER
M/M	METER MAIN
MV	MERCURY VAPOR
MH	METAL HALIDE
MIN	MINIMUM
MCA	MINIMUM CIRCUIT AMPS
MCC	MOTOR CONTROL CENTER
MCM	THOUSAND CIRCULAR MILS
MCP	MOTOR CIRCUIT PROTECTOR
MFR	MANUFACTURER
MTD	MOUNTED
MW	MICROWAVE
(N)	NEW
NATS	NON AUTOMATIC DISCONNECT
NEC	NATIONAL ELECTRICAL CODE
NEMA	NATIONAL ELECTRICAL MANUFACTURERS' ASSOCIATION
NC	NORMALLY CLOSED
NO	NORMALLY OPENED
NF	NON-FUSED
NIC	NOT IN CONTRACT
NTS	NOT TO SCALE
NL	NIGHT LIGHT
NO or #	NUMBER
OFCI	OWNER FURNISHED, CONTRACTOR INSTALLED
%Z	PERCENT IMPEDANCE
PH or ~	PHASE
PC	PHOTOCELL
PC	PLUMBING CONTRACTOR
P	POWER
PVC	POLY VINYL CHLORIDE
PDU	POWER DISTRIBUTION UNIT
PRIMARY	OVER 600 VOLTS
PROVIDE	FURNISH, INSTALL AND CONNECT
PT	POTENTIAL TRANSFORMER
PA	PUBLIC ADDRESS
RE	REPLACE EXISTING (IN-PLACE)
REC, RECEPT	RECEPTACLE
REF	REFRIGERATOR
RGS	RIGID GALVANIZED STEEL
RMS	ROOT MEAN SQUARE
SCC	SHORT CIRCUIT CURRENT
SCS	STRUCTURED CABLING SYSTEM
SFD	SMOKE FIRE DAMPER
SECONDARY	600 VOLTS AND LESS
SMACNA	SHEET MTL & AIR COND. CONTRACTORS' NATIONAL ASSOC.
SPD	SURGE PROTECTION DEVICE
SQ	SQUARE
TC	TIMECLOCK
TEL/DATA	TELEPHONE AND DATA
TV	TELEVISION
TVSS	TRANSIENT VOLTAGE SURGE SUPPRESSION
TYP	TYPICAL
UGPS	UNDERGROUND PULL SECTION
UNO	UNLESS OTHERWISE NOTED
UPS	UNINTERRUPTABLE POWER SYSTEM
VAV	VARIABLE AIR VOLUME
V	VOLTS
VA	VOLT AMPERES
VD	VOLTAGE DROP
VFD	VARIABLE FREQUENCY DRIVE
WP	WEATHERPROOF
W	WIRE
XFMR	TRANSFORMER
XX	EXISTING EQUIP TO BE DEMO'D

FLOOR BOX / SPECIALTY WALL BOX SYMBOLS

- SINGLE SERVICE IN FLOOR BOX. PROVIDE DEVICES PER PLAN. SEE SPECIFICATIONS FOR MORE INFO.
- TWO SERVICE IN FLOOR BOX. PROVIDE DEVICES PER PLAN. SEE SPECIFICATIONS FOR MORE INFO.
- THREE SERVICE IN FLOOR BOX. PROVIDE DEVICES PER PLAN. SEE SPECIFICATIONS FOR MORE INFO.
- FOUR SERVICE IN FLOOR BOX. PROVIDE DEVICES PER PLAN. SEE SPECIFICATIONS FOR MORE INFO.
- SIX SERVICE IN FLOOR BOX. PROVIDE DEVICES PER PLAN. SEE SPECIFICATIONS FOR MORE INFO.

ANNOTATIONS

- AC-2 — MECHANICAL EQUIPMENT CALLOUT, "AC" INDICATES UNIT TYPE & "2" INDICATES UNIT NUMBER. REFER TO MECHANICAL DWG FOR EXACT LOCATION & ELECTRICAL REQ.
- 3 / E-1 — DETAIL CALLOUT, "3" INDICATES DETAIL NUMBER "E-1" INDICATES SHEET NUMBER.
- XXXXXXXX — FEEDER SIZE DESIGNATION
- XXX-X — LIGHTING FIXTURE DESIGNATION
- XXX — KEYNOTE REFERENCE, REFER TO NOTES ON SHEETS, OR AS DIRECTED
- 1 — REVISION REFERENCE
- WYE CONFIGURATION
- GROUND
- DELTA CONFIGURATION

BRANCH CIRCUIT SYMBOLS

- A-1,3,5 — HOME RUN TO PANEL. LETTER DESIGNATES PANEL, NUMBERS INDICATE CIRCUITS. PROVIDE DEDICATED NEUTRAL WIRE FOR EA 'HOT' CIRCUIT IN CONDUIT RUN, #12 AWG MIN UNO
- CONCEALED CONDUIT OR BRANCH CIRCUIT UNO, 1/2" CONDUIT MIN, (2) #12 AWG CONDUCTORS MIN
- CONCEALED CONDUIT OR BRANCH CIRCUIT ROUTED IN FLOOR SLAB OR CONCRETE. COORDINATE INSTALLATION W/ GENERAL CONTRACTOR & SUPPORT AS REQ 1/2" CONDUIT (2) #12 AWG CONDUCTORS MIN
- CONDUIT OR BRANCH CIRCUIT CONCEALED BELOW GRADE, 3/4" CONDUIT MIN W/ (2) 12 AWG CONDUCTORS MIN & A CODE SIZED EQUIPMENT GROUND
- SURFACE-MTD CONDUIT OR BRANCH CIRCUIT UNO. 1/2" CONDUIT MIN, (2) #12 AWG CONDUCTORS MIN. CONDUIT SHALL BE PAINTED TO MATCH ADJ SURFACE. COORDINATE COLOR W/ ARCHITECT INTERIORS
- CONDUIT STUB OUT, CAP, MARK & RECORD ON AS-BUILT DWG
- CONDUIT CONTINUATION
- 9 2 — FLEXIBLE CONNECTION AS REQ. NUMBER OF CONDUCTORS AS REQ, VERIFY CONNECTION REQ W/ MFR PRIOR TO ROUGH-IN
- CONDUIT/ BRANCH CIRCUIT/FEEDER CONTINUATION DOWN WALL TO FLOOR BELOW
- CONDUIT/ BRANCH CIRCUIT/FEEDER CONTINUATION UP WALL TO FLOOR ABOVE
- X — X — EXG FEEDER, CONDUIT, WIRE TO BE DEMOLISHED
- LV — LOW VOLTAGE DUCTBANK BELOW GRADE
- P — POWER DUCTBANK BELOW GRADE, SEE FEEDER TAG(s) FOR QUANTITY & SIZE OF CONDUIT & WIRE
- 12KV — MEDIUM - HIGH VOLTAGE DUCTBANK BELOW GRADE, W/ VOLTAGE INDICATED. SEE FEEDER TAG(s) FOR QTY & SIZE OF CONDUIT & WIRE
- FLUSH MTD, LOCKABLE TERMINAL CABINET W/ TERMINAL STRIPS AS REQ
- SURFACE MTD, LOCKABLE TERMINAL CABINET W/ TERMINAL STRIPS AS REQ
- TELEPHONE TERMINAL BACKBOARD SIZED AS NOTED, REFER TO SYSTEM GROUND DETAIL

POWER SYMBOLS

- FLUSH MTD ELECTRICAL PANELBOARD OR LOAD CENTER. REFER TO PANEL SCHEDULE.
- SURFACE MTD ELECTRICAL PANELBOARD OR LOAD CENTER. REFER TO PANEL SCHEDULE.
- DISTRIBUTION SWITCHBOARD. REFER TO SINGLE LINE DIAGRAM.
- T — TRANSFORMER, REFER TO SINGLE LINE DIAGRAM.
- F — FUSED DISCONNECT SWITCH, HP RATED, OR COMBINATION MOTOR STARTER/DISCONNECT SWITCH W/ FUSES PER EQUIPMENT MFR & WEATHERPROOF AS REQ. PROVIDE FINAL CONNECTION TO UNIT EQUIPMENT. SEE MOTORIZED EQUIPMENT SCHEDULE FOR DISCONNECT & STARTER SIZES.
- MOTOR STARTER COMBINATION SWITCH W/ HOA SELECTOR SWITCH, ON "RUNNING LIGHT" RESET & OVERLOAD PROTECTION.
- NON-FUSED DISCONNECT SWITCH, HP RATED & WEATHERPROOF AS REQ. PROVIDE FINAL CONNECTION TO UNIT EQUIPMENT. SEE MOTORIZED EQUIPMENT SCHEDULE FOR DISCONNECT SIZES.
- CT M — UTILITY COMPANY METER. PROVIDE "CT"s" & "PT"s" AS REQ, REFER TO SINGLE LINE DIAGRAM.
- 1 / 150AF 150AT 3P — CIRCUIT BREAKER. LINE 1 REPRESENTS FRAME SIZE/RATING; LINE 2 REPRESENTS TRIP SIZE/RATING; LINE 3 REPRESENTS NUMBER OF POLES & LINE 4 REPRESENTS MISC BREAKER INFO. (SEE BELOW):
  - SHUNT = PROVIDE SHUNT TRIP MECHANISM.
  - HACR = PROVIDE HACR-RATED BREAKER.
  - GFP = GROUND FAULT PROTECTION
  - CLCB = CURRENT LIMITING CIRCUIT BREAKER
  - SS = PROVIDE SOLID STATE CIRCUIT BREAKER
- 1 / 60AS 3P / 50AF CLASS J — FUSIBLE SWITCH: LINE 1 REPRESENTS SWITCH SIZE/RATING; LINE 2 REPRESENTS NUMBER OF POLES; LINE 3 REPRESENTS FUSE SIZE/RATING; LINE 4 REPRESENTS FUSE TYPE; LINE 5 REPRESENTS MISC FUSE INFO. (SEE BELOW):
  - SHUNT= PROVIDE SHUNT TRIP MECHANISM.
  - GFP = GROUND FAULT PROTECTION
  - CLF = CURRENT LIMITING FUSE
- GROUND CONNECTION, SIZE AS INDICATED OR AS REQ.
- T — LOW VOLTAGE TRANSFORMER
- PB OR P — PULLBOX, SIZED PER NEC OR AS NOTED.
- RECESSED COMBINATION POWER OUTLET FOR IN FLOOR BOX PER PLAN FOR FLEXIBLE CONNECTION TO FURNITURE SYSTEM. VERIFY CONNECTION REQ W/ MFR PRIOR TO ROUGH-IN - MOUNT FLUSH IN FLOOR WHEN INDICATED IN A FLOOR BOX SYMBOL.
- POWER OUTLET OUTLET, MTG HEIGHT PER ADA DEVICE MT REQ. FOR FLEXIBLE CONNECTION TO FURNITURE SYSTEM PROVIDE THE FOLLOWING:
  - IN A NON-RATED INSULATED WALL, OR NON-RATED UNINSULATED WALL, PROVIDE A 2-GANG MUD RING OR CADDY #RBS SERIES BOX MTG BRACKET (EQUAL BY B-LINE OR RAYCO) W/ (2) 1-1/4"CO W/ PULL STRING TO ACCESSIBLE CLG. PROVIDE 1-1/4" BUSHINGS @ CONDUIT ENDS. REFER TO ARCHITECTURAL PLANS FOR WALL CONSTRUCTION/TYPE & CLG CONDITIONS.
  - IN A RATED WALL, PROVIDE (1) 4S/DP BOX W/ (2) 1-1/4" CO & (1) 4S/DP BOX W/ (1) 1-1/4" CO W/ PULL STRINGS IN EA CONDUIT TO ACCESSIBLE CLG. PROVIDE 1-1/4" BUSHINGS @ CONDUIT ENDS. UTILIZE CADDY #RBS SERIES BOX MTG BRACKET TO MAINTAIN BOX ALIGNMENT. (EQUAL BY B-LINE OR RAYCO) UTILIZE FIRESTOPPING SYSTEM PADS RATED FOR USE ON THE INSIDE OR OUTSIDE OF THE BOX (STI OR EO) AS REQ TO MAINTAIN RATING OF WALL OR MEMBRANE. REFER TO ARCHITECTURAL PLANS FOR WALL CONSTRUCTION/TYPE & CLG CONDITIONS.
- GROUND BUS BAR

IDENTIFICATION STAMP
DIV. OF THE STATE ARCHITECT
APP: 02-123848 INC: 01
REVIEWED FOR
SS ☑ FLS ☑ ACS ☑
DATE: 05/21/2026

LPA
ARCHITECTURE ENGINEERING INTERIOR DESIGN
LANDSCAPE ARCHITECTURE PLANNING
949-261-1001 Office
LPADesignStudios.com
5301 California Avenue, Suite 100
Irvine, California 92617

REGISTERED PROFESSIONAL ENGINEER ALDO GERARDO BAQUET E22252 3/31/26 ELECTRICAL STATE OF CALIFORNIA

This document and all other project documents, ideas, aesthetics and designs incorporated therein are instruments of service. All project documents are copyright protected, are the property of LPA, Inc. (LPA) and cannot be lawfully used in whole or in part for any project or purpose except as set forth in the contractual agreement between LPA and its Client. The unauthorized disclosure and/or use of the project documents (including the creation of derivative works), may give rise to liability for copyright infringement, unlawful disclosure, use or misappropriation of property rights held by LPA. The unauthorized use of the project documents will give rise to the recovery of monetary losses and damages including attorney fees and costs for which the unauthorized user will be held liable.
Project documents describe the design intent of the work and are not a representation of as-built or existing conditions. LPA is not responsible for any discrepancies between the project documents and the existing conditions.

© LPA, Inc.

ELKHORN ELEMENTARY SCHOOL
CAMPUS MODERNIZATION INCREMENT 1

10505 DAVIS ROAD, STOCKTON, CA 95209

Developed for
LODI UNIFIED SCHOOL DISTRICT

Revision	Date

Submittal	Date
100% SCHEMATIC DESIGN	08/25/2025
DSA SUBMITTAL	12/18/2025
DSA BACKCHECK	04/09/2026

Job Number	31942
Checked By	AB
Scale	AS NOTED

ELECTRICAL
LEGENDS

1E0.01

MEP SYSTEMS COMPONENT ANCHORAGE & BRACING NOTES

MEP COMPONENT ANCHORAGE NOTE

1. ALL MECHANICAL, PLUMBING, AND ELECTRICAL COMPONENTS SHALL BE ANCHORED AND INSTALLED PER THE DETAILS ON THE DSA APPROVED CONSTRUCTION DOCUMENTS. THE FOLLOWING COMPONENTS SHALL BE ANCHORED OR BRACED TO MEET THE FORCE AND DISPLACEMENT REQUIREMENTS PRESCRIBED IN THE 2019 CBC, SECTIONS 1617A.1.18 THROUGH 1617A.1.26 AND ASCE 7-16 CHAPTERS 13, 26 & 30:

   A. ALL PERMANENT EQUIPMENT AND COMPONENTS.
   B. TEMPORARY, MOVEABLE OR MOBILE EQUIPMENT THAT IS PERMANENTLY ATTACHED (e.g. HARD WIRED) TO THE BUILDING UTILITY SERVICES SUCH AS ELECTRICITY, GAS OR WATER. "PERMANENTLY ATTACHED" SHALL INCLUDE ALL ELECTRICAL CONNECTIONS EXCEPT PLUGS FOR 110/220 VOLT RECEPTACLES HAVING A FLEXIBLE CABLE.
   C. TEMPORARY, MOVABLE OR MOBILE EQUIPMENT WHICH IS HEAVIER THAN 400 LBS OR HAS A CENTER OF MASS LOCATED 4 FEET OR MORE ABOVE THE ADJACENT FLOOR OR ROOF LEVEL THAT DIRECTLY SUPPORT THE COMPONENT IS REQUIRED TO BE RESTRAINED IN A MANNER APPROVED BY DSA.

2. THE FOLLOWING MECHANICAL AND ELECTRICAL COMPONENTS SHALL BE POSITIVELY ATTACHED TO THE STRUCTURE, BUT NEED NOT DEMONSTRATE DESIGN COMPLIANCE WITH THE REFERENCES NOTED ABOVE. THESE COMPONENTS SHALL HAVE FLEXIBLE CONNECTIONS PROVIDED BETWEEN THE COMPONENT AND ASSOCIATED DUCTWORK, PIPING, AND CONDUIT. FLEXIBLE CONNECTIONS MUST ALLOW MOVEMENT IN BOTH TRANSVERSE AND LONGITUDINAL DIRECTIONS:

   A. COMPONENTS WEIGHING LESS THAN 400 LBS AND HAVE A CENTER MASS LOCATED 4 FEET OR LESS ABOVE THE ADJACENT FLOOR OR ROOF LEVEL THAT DIRECTLY SUPPORT THE COMPONENT.
   B. COMPONENTS WEIGHING LESS THAN 20 LBS, OR IN THE CASE OF DISTRIBUTED SYSTEMS, LESS THAN 5 LBS PER FOOT, WHICH ARE SUSPENDED FROM A ROOF OR FLOOR OR HUNG FROM A WALL.

3. THE ANCHORAGE OF ALL MECHANICAL, ELECTRICAL AND PLUMBING COMPONENTS SHALL BE SUBJECT TO THE APPROVAL OF THE DESIGN PROFESSIONAL IN GENERAL RESPONSIBLE CHARGE OR STRUCTURAL ENGINEER DELEGATED RESPONSIBILITY AND ACCEPTANCE BY DSA. THE PROJECT INSPECTOR WILL VERIFY THAT ALL COMPONENTS AND EQUIPMENT HAVE BEEN ANCHORED IN ACCORDANCE WITH THE ABOVE REQUIREMENTS.

APPLICABLE CODE: 2025 CBC

MEP DISTRIBUTION SYSTEM BRACING NOTE FOR PIPING, DUCTWORK, AND ELECTRICAL CONDUIT

PIPING, DUCTWORK, AND ELECTRICAL DISTRIBUTION SYSTEMS SHALL BE BRACED TO COMPLY WITH THE FORCES AND DISPLACEMENTS PRESCRIBED IN ASCE 7 SECTION 13.3 AS DEFINED IN ASCE 7 SECTIONS 13.6.5, 13.6.6, 13.6.7, AND 13.6.8; AND 2025 CBC, SECTIONS 1617A.1.24, 1617A.1.25 AND 1617A.1.26.

THE METHOD OF SHOWING BRACING AND ATTACHMENTS TO THE STRUCTURE FOR THE IDENTIFIED DISTRIBUTION SYSTEM ARE AS NOTED BELOW. THE MEP DESIGN PROFESSIONAL ENGINEER RESPONSIBLE FOR CONTENT ON THESE SHEETS HAS VERIFIED THAT THE DESIGN METHODS IDENTIFIED BELOW ARE IN ACCORDANCE WITH DSA IR 16-13.

MECHANICAL PIPING (MP), MECHANICAL DUCTS (MD), PLUMBING PIPING (PP), ELECTRICAL DISTRIBUTION SYSTEMS (E):

MP	MD	PP	E	
☐	☐	☐	■	OPTION 1: PROJECT-SPECIFIC DESIGN.
☐	☐	☐	☐	OPTION 2: DESIGN BASED ON OSHPD OPM, WITHIN PROJECT SUBMITTAL.
☐	☐	☐	☐	OPTION 3: DESIGN BASED ON OSHPD OPM, DEFERRED SUBMITTAL.

SITE UTILITY PLAN GENERAL NOTES

THESE NOTES ESTABLISH MIN QUALITY LEVELS & COORDINATION REQ. RESPECTIVE UTILITY COMPANY PLANS & REQ TAKE PRECEDENCE OVER THESE NOTES WITH REGARD TO RESPECTIVE UTILITY COMPANY CONDUIT & UNDERGROUND STRUCTURE SYSTEMS.

1. CALL UNDERGROUND SERVICE ALERT (USA) AT 1 (800) 422-4133 OR APPLICABLE STATE & LOCAL DIG SAFE OR UNDERGROUND ALERT HOTLINES PRIOR TO CONSTRUCTION START.
2. COORDINATE ALL UNDERGROUND STRUCTURES & CONDUIT ROUTING W/ LANDSCAPE ARCHITECT PRIOR TO ROUGH-IN TO ENSURE THAT SUCH ITEMS ARE NOT PLACED IN CRITICAL LANDSCAPE PLANTING/HARDSCAPE AREAS.
3. VAULTS, MAINTENANCE HOLES (MH's) & CONDUITS SHALL MAINTAIN A MIN COVER OF 24" BELOW FINAL SURFACE @ ALL CONDITIONS. INCLUDE ALL COSTS IN BASE BID TO MEET UTILITY COMPANY REQ WHICH MAY REQ GREATER MIN CONDUIT DEPTHS.
4. VAULTS, MH's & PULLBOXES (PB's) SHALL BE EQUIPPED WITH KNOCKOUT PANELS OR PRE-CAST INDIVIDUAL CONDUIT OPENINGS. CONDUITS SHALL ONLY ENTER & EXIT ON END/SHORT WALLS. CONDUITS MAY NOT ENTER & EXIT ON SIDE/LONG WALLS, CLG OR FLOORS UNO.
5. CUT DUCTS FLUSH W/ INTERIOR VAULT/MH/PB WALL.
6. GROUT AROUND DUCT ENTRANCES ON VAULT/MH/PB WALLS.
7. SLURRY BACKFILL AROUND DUCTS WITHIN 5 FT OF VAULT/MH/PB TO PREVENT SHEARING.
8. CONDUITS PASSING UNDER THE BUILDING PERIMETER SHALL BE ENCASED IN LIGHTWEIGHT CONCRETE OR WATER-IMPERVIOUS CLAY TO PREVENT WATER INFILTRATION. SEE ELECTRICAL SPECIFICATIONS FOR ADDL INFO.
9. CONDUIT BEND RADIUS FOR BUILDING ENTRANCES & AT POLES SHALL BE A MIN OF 24" FOR CONDUITS W/ LESS THAN 2" INTERNAL DIA AND A MIN OF 48" FOR CONDUITS W/ MORE THAN 2" INTERNAL DIA.
10. PREFERRED CONDUIT SWEEP RADIUS BETWEEN VAULTS IS 25 FT. UNDER NO CIRCUMSTANCES SHALL THE CONDUIT SWEEP RADIUS BE LESS THAN 12.5 FT. MAX OF 90° PER SWEEP & LIMITED TO NO MORE THAN (2) 90° WEEPS BETWEEN VAULTS.
11. VAULTS/MH's/PB's ARE TO BE EQUIPPED W/ RACKING, GROUNDING LUGS, & BOLT-DOWN LIDS UNO.
12. VAULTS & MH's TO BE EQUIPPED W/ ROUND COVERS, EXTENSION RINGS AS REQ, LADDERS & (3) SEGMENTS OF 6 FT HIGH CABLE RACKING PER EA LONG WALL.
13. LABEL ALL NON-UTILITY COMMUNICATION VAULT/MH/PB COVERS W/ "COMMUNICATIONS" UNO ON PLANS.
14. COORDINATE FINAL VAULT/MH/PB OPENING HEIGHT W/ GC PRIOR TO ROUGH-IN TO ENSURE FINAL GRADE DOES NOT SLOPE INTO VAULT/MH/PB OPENING.
15. CONTRACTOR TO PROVIDE A MIN OF 8" DEEP COMPACTED 1/2" DIA GRAVEL, UNDER ALL VAULTS, MH's OR PB's TO ENSURE UNIFORM DISTRIBUTION OF SOIL PRESSURE ON THE FLOOR & BE ABLE TO DISSIPATE WATER OUT OF THE VAULT, MH OR PB.
16. ALL VAULTS/MH's/PB's W/O GROUNDING LUGS SHALL HAVE AN 8' x 3/4" COPPER GROUND ROD DRIVEN THRU THE FLOOR TO ALLOW GROUNDING OF ITEMS WITHIN.
17. ALL VAULTS/MH's/PB's SHALL BE PROVIDED W/ TRAFFIC RATED COVERS WHEN LOCATED IN PAVED AREAS UTILIZED FOR VEHICLE TRAFFIC.
18. IF THE WATER OR MOISTURE BARRIER ON OR NEAR THE FOUNDATION OF A BUILDING IS DISTURBED IN ANY MANNER BY EXCAVATION OR OTHER CONSTRUCTION WORK. THE MOISTURE BARRIER MUST BE REPAIRED FOLLOWING THE RECOMMENDATIONS OF THE MFR OF THE ORIGINAL BARRIER PRODUCT.
19. THE CONTRACTOR SHALL INCLUDE IN BASE BID ALL COSTS TO COMPLY WITH ALL REQ FOR CONFINED SPACE ENTRY PER THE OSHA REQ 29 CFR-1910.146, 29 CFR-1910.268, ETC DURING ANY CONFINED SPACE ENTRY.
20. ANY DUCTS LEAVING A VAULT, MH OR PB ROUTED INTO A FACILITY SHALL BE PLUGGED AT EA END USING REMOVEABLE MECHANICAL PLUGS DESIGNED TO PREVENT WATER & GAS FROM ENTERING THE FACILITY.
21. SEE ELECTRICAL SPECIFICATIONS & PLAN DETAILS FOR ADDL REQ REGARDING UNDERGROUND CONDUITS & IN-GRADE VAULT/MH/PB/JUNCTION BOXES.
22. INSTALL MULE TAPE OR 3/8" PULL ROPE & TRUE-TAPE IN EA UTILITY CONDUIT.

DEMOLITION NOTES

1. THE ELECTRICAL DWG ARE DIAGRAMMATIC ONLY. DO NOT SCALE THE ELECTRICAL DWG TO DETERMINE THE LOCATION OF EQUIPMENT OR OUTLETS. SEE ARCHITECTURAL PLANS, WHERE PROVIDED ON PROJECT, FOR EXTENT OF DEMOLITION.
2. THE EXG CONDITIONS SHOWN ARE FROM AVAILABLE RECORD DWGS & SHOWN FOR REFERENCE ONLY. CONTRACTOR SHALL VERIFY ACTUAL EXG CONDITIONS @ SITE PRIOR TO SUBMITTING BID. ALL DEMOLITION, ALTERATION, EXTENSION, RELOCATION, REHABILITATION WORK SHALL BE INCLUDED IN CONTRACT. NO ADDITIONAL ALLOWANCE OR CHANGE ORDERS WILL BE ACCEPTED.
3. CONTRACTOR IS RESPONSIBLE TO RELOCATE OR REMOVE FROM WALLS, CLGS, FLOOR SPACES, ETC. ANY EXG CONDUITS, WIRES, BOXES, FITTINGS, FIXTURES OR OTHER ELECTRICAL EQUIPMENT WHICH INTERFERES WITH PLANNED REMODEL WORK. PROVIDE CIRCUIT CONTINUATION REQ FOR ALL EXG OUTLETS, FIXTURES, EQUIPMENT, ETC SCHEDULED TO REMAIN.
4. NOTIFY THE ENGINEER IMMEDIATELY WHEREVER EXG EQUIPMENT IS ENCOUNTERED WHICH MUST BE RELOCATED DUE TO THE NEW CONSTRUCTION, OR NOT INDICATED ON "AS-BUILT" DWGS OR WAS BURIED UNDERGROUND OR EMBEDDED IN STRUCTURE WALLS.
5. CAREFULLY PROTECT ALL WALLS, TRIM, FLOORS, EQUIPMENT, UTILITY LINES & MATERIALS. WHEN WORKING ON FINISHED SURFACES, LIMIT DAMAGE TO THE SMALLER AREA IF POSSIBLE & RESTORE TO THE ORIGINAL CONDITION ALL SURFACES WHICH ARE DAMAGED BECAUSE OF THE INSTALLATION OF THIS WORK.
6. EQUIPMENT, MATERIALS & SUPPLIES TEMPORARILY REMOVED FOR PROTECTION SHALL BE REPLACED IN ORIGINAL LOCATIONS. ANY MATERIALS DAMAGED SHALL BE REPLACED WITH NEW MATERIALS OF LIKE KIND & QUALITY.
7. DEMOLITION WORK SHALL BE DONE IN A MANNER WHICH WILL NOT CAUSE UNNECESSARY INCONVENIENCE OR DANGER TO USERS OF THE PREMISES & ADJACENT SITE, & NOT INTERFERE WITH ITS OPERATION. ANY DEMOLITION WORK TO BE PERFORMED MUST BE PLANNED IN ADVANCE.
8. DO ALL DRILLING, CUTTING, ETC REQ TO DEMOLISH ELECTRICAL WORK AS INDICATED OR PROVIDE BLANK COVER PLATE ON ALL OUTLETS EXPOSED BY REMOVAL OF FIXTURE OF DEVICES.
9. RESEAL ALL PENETRATIONS OR OPENING THROUGH WALLS, CLG, FLOORS, ETC, TO MAINTAIN THE RATING OF STRUCTURE.
10. CONTRACTOR SHALL VERIFY EXG CONDUIT/CONDUCTOR RUNS ON CIVIL DEMOLITION PLAN, SHEET C1.01. REUSE AS REQ & REMOVE ALL UNUSED CONDUIT/CONDUCTORS. REMOVE CONDUIT BACK TO SCOPE OF WORK LIMIT LINE. AT EACH END OF FEEDER, TAG & LABEL CONDUIT. DOCUMENT DETAILED DIMENSIONS ON AS-BUILTS. REMOVE CONDUCTORS BACK TO SOURCE (VERIFY WITH OWNER). UNUSED CONDUIT IN INACCESSIBLE LOCATIONS (WALLS TO REMAIN) CAN BE ABANDONED IN PLACE.
11. CONTRACTOR SHALL FIELD VERIFY EXG CONDUIT/WIRING RUNS, REUSE AS REQ & REMOVED ALL UNUSED CONDUIT/WIRING. UNUSED CONDUIT IN INACCESSIBLE LOCATIONS (WALLS TO REMAIN) CAN BE ABANDONED IN PLACE. REMOVE UNUSED WIRING.
12. CONTRACTOR TO VERIFY CIRCUIT NUMBER & LOADS FOR ALL EXG EQUIPMENT PRIOR TO INSTALLATION OF NEW OR RELOCATED ELECTRICAL EQUIPMENT. REASSIGN CIRCUITS & LOADS ACCORDINGLY. PROVIDE COMPLETE "AS BUILT" DWGS & TYPEWRITTEN DIRECTORIES FOR PANELS.
13. WHERE NECESSARY TO SHUT OFF UTILITY SERVICES OR CAUSE INTERRUPTION TO POWER OR SIGNAL SYSTEMS WHILE A BUILDING IS OCCUPIED OR THAT EFFECT ADJACENT BUILDINGS, SCHEDULE OUTAGES OR INTERRUPTIONS WITH THE OWNER, BUILDING OCCUPANTS AND/OR ADJACENT BUILDING OWNER(S) & OCCUPANTS PRIOR TO CONDUCTING OUTAGE(S) OR INTERRUPTIONS.

GENERAL NOTES

1. THE ELECTRICAL CONTRACTOR (EC) SHALL INCLUDE & PROVIDE IN BID ALL LABOR & MATERIALS NECESSARY FOR A COMPLETE & OPERATIONAL INSTALLATION OF ALL ELECTRICAL SYSTEMS.
2. EC SHALL COORDINATE & OBTAIN ALL APPROVALS, PERMITS, & DOCUMENTS FROM REGULATORY AGENCIES & UTILITY COMPANIES.
3. ALL CONDUIT RACEWAY SYSTEMS ARE TO BE INSTALLED AS FOLLOWS:

   A. RIGID GALVANIZED STEEL IS TO BE INSTALLED IN ALL AREAS WHICH ARE EXPOSED TO WEATHER AND/OR PHYSICAL DAMAGE.
   B. FLEXIBLE METALLIC CONDUIT I S PERMITTED FOR SHORT CONNECTIONS TO LIGHT FIXTURES (6'-0" MAX).
   C. FLEXIBLE CONDUIT SHALL ALSO BE INSTALLED FOR EQUIPMENT REQ VIBRATION ISOLATION & HORIZONTAL RUNS IN WOODEN STUD WALLS. ELECTRICAL METALLIC TUBING (EMT) W/ COMPRESSION TYPE FITTINGS SHALL BE USED FOR BUILDING INTERIOR WORK.
   D. PVC CONDUIT SHALL BE USED FOR UNDERGROUND CONDUITS. ROUTE CODE SIZED GROUND WIRE INSIDE OF CONDUIT. CONDUIT RISERS & STUBS ABOVE GRADE SHALL BE IMC WITH HALF-LAPPED TAPE COVERING OR PVC COATING & UTILITY COMPANIES.

4. UNO OR REFERENCED ON THE DWG ALL NEW ELECTRICAL WIRING IS TO BE 600V RATED COPPER W/ TYPE "THHN/THWN" INSULATION.
5. ALL MTG HEIGHTS REFERENCED ON DWG ARE MEASURED FROM FINISHED FLOOR UNLESS OTHERWISE REFERENCED OR INDICATED ON THE DRAWINGS.
6. ALL ELECTRICAL EQUIPMENT LOCATIONS (LIGHTING, RECEPTACLE, FLOOR BOX, ETC) ARE TO BE VERIFIED WITH THE ARCHITECT AND/OR EQUIPMENT SUPPLIER PRIOR TO BEGINNING ANY ROUGH-IN.
7. ALL LIGHTING FIXTURES SHALL BE MTD & SUPPORTED IN ACCORDANCE W/ OSHA STANDARDS, & ALL STATE, LOCAL, SEISMIC, & CALIFORNIA ELECTRIC CODES.
8. THE DWG INCLUDED IN THIS DOCUMENT SET ARE DIAGRAMMATIC. THEY ARE REPRESENTATIVE OF THE ENGINEER OF RECORDS DESIGN INTENT FOR ALL ELECTRICAL DEVICES/EQUIPMENT & THE INDIVIDUAL POWER FEEDS THEY ARE TO BE CONNECTED TO. THE SELECTED EC SHALL BE RESPONSIBLE FOR PROVIDING ALL J-BOXES, CONDUIT, WIRING/CABLING, ETC AS REQ FOR A COMPLETE & OPERATIONAL ELECTRICAL INSTALLATION.
9. ALL ELECTRICAL EQUIPMENT (PANELS, RECEPTACLES, J-BOXES, ETC.) SHALL BE WEATHERPROOF AND/OR INSTALLED IN A NEMA 3R ENCLOSURE WHERE APPLICABLE OR INSTALLED OUTDOORS.
10. ALL ELECTRICAL WORK SHALL BE PERFORMED ACCORDING TO STATE, LOCAL, NATIONAL, & DISTRICT STANDARDS & CODES. COORDINATE SPECIFIC REQ W/ DISTRICT STANDARDS & AUTHORITY HAVING JURISDICTION.
11. ALL ELECTRICAL EQUIPMENT SHALL BE NEW & IS TO BE CLEARLY LABELED/IDENTIFIED AS UNDERWRITER LABORATORIES (UL) COMPLIANT UNO OR REFERENCED IN THE DWG OR SPECIFICATIONS.
12. EC IS RESPONSIBLE FOR SECURING ALL REQ BUILDING PERMITS & SHALL INCLUDE THE COST TO SECURE BUILDING PERMITS IN THEIR FINAL BID.
13. UNLESS OTHERWISE WRITTEN, STATED, OR REFERENCED IN DWG OR SPECIFICATIONS CONTRACTOR SHALL GUARANTEE THE COMPLETE ELECTRICAL INSTALLATION FOR A PERIOD OF 1-YEAR.
14. ALL ELECTRICAL DISTRIBUTION EQUIPMENT (PANELS, DISTRIBUTION BOARDS, TRANSFORMERS, ETC), FEEDERS (CONDUIT, CONDUCTOR SIZE, & QUANTITY), MECHANICAL EQUIPMENT, ELEVATORS, VARIABLE FREQUENCY DRIVES (VFD'S), ETC. MAY ONLY BE REFERENCED ON THE SINGLE-LINE DWG & NOT INDIVIDUAL PLAN SHEETS. EC SHALL REVIEW & VERIFY ALL REFERENCED INFORMATION ON THE SINGLE-LINE DWG.
15. EC SHALL BE RESPONSIBLE FOR ALL REQ SAW-CUTTING, CORE DRILLING, PATCHING, REFINISHING, ETC AS REQ FOR INSTALLATION OF ELECTRICAL EQUIPMENT & SYSTEMS. ANY PENETRATIONS OR OPENINGS MADE IN WALLS OR STRUCTURES SHALL BE PATCHED AND/OR SEALED AS REQ TO MAINTAIN THE INTEGRITY AND/OR RATING OF THE WALL OR STRUCTURE.
16. EC SHALL VISIT THE SITE PRIOR TO SUBMISSION OF THEIR FINAL BID TO VERIFY ALL EXG SITE CONDITIONS WHICH MAY AFFECT THE COMPLETION OF THE ELECTRICAL INSTALLATION. ALL METHODS & REQUIREMENTS FOR INSTALLATION SHALL BE DETERMINED PRIOR TO BID DATE. ELECTRICAL EC SHALL NOTIFY THE ENGINEER OF RECORD OF ANY REQ MODIFICATIONS WHICH ARE NOT REFERENCED ON THESE ELECTRICAL PLANS. SUBMITTAL OF THE EC'S BID DEMONSTRATES THE CONTRACTOR'S AWARENESS OF ALL SITE CONDITIONS & REQ WORK TO BE PERFORMED.
17. ALL CLGS & CLG SYSTEMS AS A RULE ARE CONSIDERED TO BE INACCESSIBLE. ALL ELECTRICAL DEVICES & EQUIPMENT INSTALLED ABOVE CLGS ARE TO BE MTD IN A LOCATION WHICH IS ACCESSIBLE. IN SITUATIONS WHERE ELECTRICAL DEVICES & EQUIPMENT MUST BE INSTALLED IN AN AREA WHICH IS INACCESSIBLE, EC SHALL INSTALL AN ADEQUATELY SIZED, CODE COMPLIANT ACCESS PANEL AS REQ BY CURRENT CODES - LOCATION OF THE REQ ACCESS PANEL SHALL BE COORDINATE W/ THE ARCHITECT & INTERIOR DESIGNER PRIOR TO ROUGH-IN.
18. EC IS RESPONSIBLE FOR COMPLETING ALL FINAL ELECTRICAL CONNECTIONS TO OWNER FURNISHED EQUIPMENT & SHALL PROVIDE ALL MOTOR START SWITCHES, DISCONNECTS, ETC AS REQ.
19. ALL ELECTRICAL EQUIPMENT CONNECTIONS, MOUNTING LOCATIONS, ELECTRICAL REQUIREMENTS, ETC ARE TO BE COORDINATED & VERIFIED PRIOR TO COMMENCEMENT OF ELECTRICAL ROUGH-IN.
20. EC TO SUBMIT SHOP DWG FOR THE APPROVAL OF THE ELECTRICAL ENGINEER OF RECORD FOR ALL ELECTRICAL EQUIPMENT & MATERIALS TO BE UTILIZED IN THE ELECTRICAL INSTALLATION. ALL APPROVALS BY THE ENGINEER OF RECORD MUST BE SECURED PRIOR TO COMPLETION OF ANY PURCHASE ORDERS OR ROUGH-IN WORK.
21. THESE ELECTRICAL DWG & ASSOCIATED SPECIFICATIONS ARE TO BE CONSIDERED CONTRACT DOCUMENTS FOR AGENCY REVIEW/APPROVAL & EC BIDDING PURPOSES.
22. THE COMPLETE ELECTRICAL SYSTEM SHALL BE GROUNDED IN ACCORDANCE WITH CEC ARTICLE 250. ALL POWER & LIGHTING CIRCUITS SHALL BE INSTALLED WITH A MIN #12AWG CU GROUND WIRE UNO OR REFERENCED.
23. EC TO PROVIDE ENGRAVED PHENOLIC NAMEPLATES ON ALL DISCONNECT SWITCHES, DISTRIBUTION EQUIPMENT, J-BOXES ETC. W/ METALLIC COVERS. SEE GENERAL NOTES ON SINGLE-LINE DIAGRAM FOR SPECIFIC INFORMATION REGARDING NAME PLATE REQ.
24. ELECTRICAL & LIGHTING COVER PLATE COLOR, ENGRAVING & LABELING PER SPECIFICATIONS.
25. AT THE COMPLETION OF THE PROJECT THE EC SHALL PROVIDE THE OWNER WITH A COMPLETE SET OF AS-BUILT ELECTRICAL DWG.
26. ANY & ALL WORK THAT REQ AN INTERRUPTION TO A BUILDING(S) ELECTRICAL SERVICE MUST BE COORDINATED W/ THE DISTRICT A MIN OF 48 HOURS IN ADVANCE. ANY SERVICE DOWNTOWN SHALL NOT OCCUR DURING SCHOOL HOURS.
27. EC SHALL BE RESPONSIBLE FOR FOR ENSURING THAT ALL LOW VOLTAGE SYSTEMS ARE COMPATIBLE & ARE COMPLETE & OPERATIONAL.
28. EC SHALL PERMANENTLY TAG ALL CONDUCTORS IN EA ELECTRICAL & LOW VOLTAGE SYSTEM AS REFERENCED IN THE SPECIFICATIONS.
29. ANY SURFACE MTD EXPOSED CONDUIT IN VIEW OF THE PUBLIC SHALL BE PAINTED TO MATCH THE FINISH OF THE SURFACE TO WHICH IT IS MTD WITH TWO (2) COATS OF PAINT. ALL EXT SURFACE MTD EXPOSED CONDUITS ARE TO BE PAINTED W/ TWO (2) COATS OF WEATHERPROOF LATEX PAINT.
30. EC TO PROVIDE ALL CONDUIT ONLY (CO) INFRASTRUCTURE WITH A 3/16" NYLON PULL ROPE. LABEL PULL ROPE AT EACH END W/ THE LOCATIONS OF ORIGIN & TERMINATION.
31. IN INSTANCES WHERE A CONFLICT BETWEEN THE ELECTRICAL DWG & THE SPECIFICATIONS FOR THE PROJECT EXISTS, THE EC SHALL ADHERE TO THE MORE STRINGENT REQ.
32. ELECTRICAL DWG ARE DIAGRAMMATIC. AS SUCH, ALL ELECTRICAL EQUIPMENT LOCATIONS, CONDUIT ROUTING, ETC ARE NOT PRECISE & SHALL BE COORDINATED, VERIFIED, & DETERMINED IN THE FIELD. EC TO INSTALL ALL ELECTRICAL EQUIPMENT & ROUTE ALL CONDUITS IN LOCATIONS WHICH MEET CODE REQ FOR ACCESSIBILITY/MOUNTING & DO NOT INTERFERE W/ ANY BUILDING STRUCTURES, UTILITIES, OR OTHER TRADE EQUIPMENT.
33. ALL EXG SITE RELATED ELECTRICAL EQUIPMENT (I.E. UNDERGROUND UTILITIES, DUCTS, STRUCTURES, PULL BOXES, ETC.) LOCATIONS ARE DIAGRAMMATIC IN NATURE & ONLY REFLECT APPROXIMATE LOCATIONS, QUANTITIES, &/OR ROUTING INFORMATION. ALL REFERENCED INFO HAS EITHER BEEN SURVEYED, REPORTED BY THE OWNER/OWNERS REP, AND/OR REFERENCED ON AN AS-BUILT RECORD DOCUMENTS. ALL EXG ELECTRICAL EQUIPMENT REFERENCED ON THESE DWG IS TO BE FIELD VERIFIED BY THE CONTRACTOR PRIOR TO COMMENCEMENT OF BY ACCEPTING THESE PLANS OR PROCEEDING WITH ELECTRICAL SCOPE OF WORK, AGREES TO ACCEPT LIABILITY & SHALL RENDER THE ENGINEER OF RECORD HARMLESS FOR ANY ELECTRICAL EQUIPMENT NOT REPORTED TO THE ENGINEER DURING THE DESIGN PROCESS. THE CONTRACT TO TAKE THE REQ PRECAUTIONARY MEASURES TO ENSURE ALL EXG ELECTRICAL EQUIPMENT IS PROTECTED IN PLACE.
34. ANY EXG BUILDING STRUCTURES OR SURFACES DAMAGED BY DEMOLITION OR DURING INSTALLATION ACTIVITIES SHALL BE REPAIRED, PATCHED, AND/OR REFINISHED TO THE SATISFACTION OF THE OWNER.
35. ALL EXG ELECTRICAL EQUIPMENT INDICATED TO BE DEMOLISHED SHALL BE REMOVED ENTIRELY & ALL AFFECTED SURFACES OR STRUCTURES SHALL BE REPAIRED, REPLACED, AND/OR REFINISHED TO MATCH THE ADJACENT SURFACES OR DAMAGED ITEM(S).
36. FOR CLARITY ONLY RECONSTRUCTION OR NEW WORK RELATED ELEMENTS & SELECT EXISTING FACILITIES SPECIFICALLY REQ COORDINATION W/ ANY NEW WORK.
37. ALL CONDUITS, BOXES, SURFACE MTD RACEWAYS, SUPPORT DEVICES, & ASSOCIATED FITTINGS SHALL BE MTD IN CONCEALED LOCATIONS ABOVE CLG, DUCTS, TRUSSES, BEAMS, ETC IN AREAS WHERE A CONCEALED MTG LOCATION IS NOT AVAILABLE EQUIPMENT SHALL BE PAINTED TO MATCH THE ADJACENT SURFACES.
38. ANY PENETRATIONS BY CONDUITS OR OTHER ELECTRICAL EQUIPMENT THROUGH A FIRE RATED WALL - WHETHER EXG OR NEW - SHALL MAINTAIN THE APPROPRIATE FIRE RATING BY SEALING THE PENETRATION W/ THE APPROPRIATE UL-LISTED FIRE-STOP MATERIAL/SYSTEM.
39. ELECTRICAL CONTRACTOR SHALL PREPARE & SUBMIT THE FOLLOWING CALIFORNIA ENERGY COMMISSION T-24 CERTIFICATE OF ACCEPTANCE LTG-1-1, PARTS 1, 2, & 3; LIGHTING CONTROL LTG-2-A; AND/OR AUTOMATIC DAYLIGHTING CONTROL LTG-3-A, AS THEY APPLY TO THE BUILDING DEPARTMENT PRIOR TO ISSUANCE OF THE CERTIFICATE OF OCCUPANCY.
40. LEED COMMISSIONING NOTE: ELECTRICAL CONTRACTOR TO COORDINATE & PROVIDE ASSISTANCE FOR COMPLETE COMMISSIONING OF ALL SYSTEMS IDENTIFIED IN COMMISSIONING AGENT'S DOCUMENTS, INCL BUT NOT LIMITED TO LIGHTING CONTROLS, ELECTRONIC METERING, ETC.

ADDITIONAL NOTES

1. ALL INFO REFERENCED IS PRELIMINARY IN NATURE & DOES NOT REPRESENT FINAL DESIGN DOCUMENTS. ALL INFO & REQ RELATIVE TO UTILITY INFRASTRUCTURE SHALL BE COORDINATED, VERIFIED, & INSTALLED PER FINAL UTILITY COMPANY DESIGN DOCUMENTS.
2. ROUTING OF ALL CONDUIT SHALL BE COORDINATED IN THE FIELD & CONFIRMED BY ENGINEER & ARCHITECT.
3. COORDINATE ALL CONDUIT ROUTING, ELECTRICAL DEVICE LOCATIONS, PULL BOX LOCATIONS, ETC W/ LANDSCAPE PLANTING PLANS TO AVOID CONFLICTS W/ TREES, SHRUBS, ETC.
4. ALL CONDUCTOR & CABLE RUNS ARE TO BE CONTINUOUS. NO CONDUCTORS OR LOW VOLTAGE CABLING TO BE INSTALLED AS PART OF INCREMENT ONE. ALL CONDUCTORS & LOW VOLTAGE CABLING TO BE INSTALLED AS PART OF INCREMENT TWO & TERMINATED INSIDE OF THE BUILDING.
5. ALL CONDUIT SHALL BE PROVIDED W/ PROPERLY SIZED PULL STRING PER UTILITY COMPANY STANDARDS.
6. ALL EQUIPMENT MTD OUTDOORS SHALL BE INSTALLED IN A WEATHERPROOF NEMA 3R ENCLOSURE.
7. SEE ARCHITECTURAL/LANDSCAPE ARCHITECTURAL PLANS FOR EXACT LOCATIONS OF FIXTURES, PULL BOXES, MANHOLES, OTHER ELECTRICAL DEVICES, ETC. COORDINATE ALL UNDERGROUND STRUCTURES & CONDUIT ROUTING W/ LANDSCAPE ARCHITECT PRIOR TO ROUGH-IN TO ENSURE THAT SUCH ITEMS ARE NOT PLACED IN CRITICAL LANDSCAPE PLANTING/HARDSCAPE AREAS.
8. PROVIDE CONCRETE ENCASEMENT FOR ALL TRENCHES W/ MORE THAN THREE (3) CONDUITS. ALL UTILITY CONDUIT SHALL BE ENCASED PER UTILITY COMPANY REQUIREMENTS.

IDENTIFICATION STAMP
DIV. OF THE STATE ARCHITECT
APP: 02-123848 INC: 01
REVIEWED FOR
SS ☑ FLS ☑ ACS ☑
DATE: 05/21/2026

LPA
ARCHITECTURE ENGINEERING INTERIOR DESIGN
LANDSCAPE ARCHITECTURE PLANNING
949-261-1001 Office
LPADesignStudios.com
5301 California Avenue, Suite 100
Irvine, California 92617

REGISTERED PROFESSIONAL ENGINEER
ALDO GERARDO BAUTISTA
E22252
3/31/26
ELECTRICAL
STATE OF CALIFORNIA

This document and all other project documents, ideas, aesthetics and designs incorporated therein are instruments of service. All project documents are copyright protected, are the property of LPA, Inc. (LPA) and cannot be lawfully used in whole or in part for any project or purpose except as set forth in the contractual agreement between LPA and its Client. The unauthorized disclosure and/or use of the project documents (including the creation of derivative works), may give rise to liability for copyright infringement, unlawful disclosure, use or misappropriation of property rights held by LPA. The unauthorized use of the project documents will give rise to the recovery of monetary losses and damages including attorney fees and costs for which the unauthorized user will be held liable.
Project documents describe the design intent of the work and are not a representation of as-built or existing conditions. LPA is not responsible for any discrepancies between the project documents and the existing conditions.

© LPA, Inc.

ELKHORN ELEMENTARY SCHOOL
CAMPUS MODERNIZATION INCREMENT 1

10505 DAVIS ROAD, STOCKTON, CA 95209

Developed for
LODI UNIFIED SCHOOL DISTRICT

Revision	Date

Submittal	Date
100% SCHEMATIC DESIGN	08/25/2025
DSA SUBMITTAL	12/18/2025
DSA BACKCHECK	04/09/2026

Job Number	31942
Checked By	AB
Scale	AS NOTED

ELECTRICAL
GENERAL NOTES

1E0.02

EXISTING ELECTRICAL SITE PLAN | 1" = 20'-0" | 05

IDENTIFICATION STAMP
DIV. OF THE STATE ARCHITECT
APP: 02-123848 INC: 01
REVIEWED FOR
SS ☑ FLS ☑ ACS ☑
DATE: 05/21/2026

LPA

ARCHITECTURE ENGINEERING INTERIOR DESIGN
LANDSCAPE ARCHITECTURE PLANNING

949-261-1001 Office
LPADesignStudios.com
5301 California Avenue, Suite 100
Irvine, California 92617

REGISTERED PROFESSIONAL ENGINEER
ALVO GERARDO BAUTISTA
E22255
3/31/28
ELECTRICAL
STATE OF CALIFORNIA

This document and all other project documents, ideas, aesthetics and designs incorporated therein are instruments of service. All project documents are copyright protected, are the property of LPA, Inc. (LPA) and cannot be lawfully used in whole or in part for any project or purpose except as set forth in the contractual agreement between LPA and its Client. The unauthorized disclosure and/or use of the project documents (including the creation of derivative works), may give rise to liability for copyright infringement, unlawful disclosure, use or misappropriation of property rights held by LPA. The unauthorized use of the project documents will give rise to the recovery of monetary losses and damages including attorney fees and costs for which the unauthorized user will be held liable.
Project documents describe the design intent of the work and are not a representation of as-built or existing conditions. LPA is not responsible for any discrepancies between the project documents and the existing conditions.

© LPA, Inc.

ELKHORN ELEMENTARY SCHOOL
CAMPUS MODERNIZATION INCREMENT 1

10505 DAVIS ROAD, STOCKTON, CA 95209

Developed for
LODI UNIFIED SCHOOL DISTRICT

Revision	Date

Submittal	Date
100% SCHEMATIC DESIGN	08/29/2025
DSA SUBMITTAL	12/18/2025
DSA BACKCHECK	04/09/2026

Job Number	31942
Checked By	AB
Scale	AS NOTED

EXISTING ELECTRICAL SITE PLAN

1E1.01

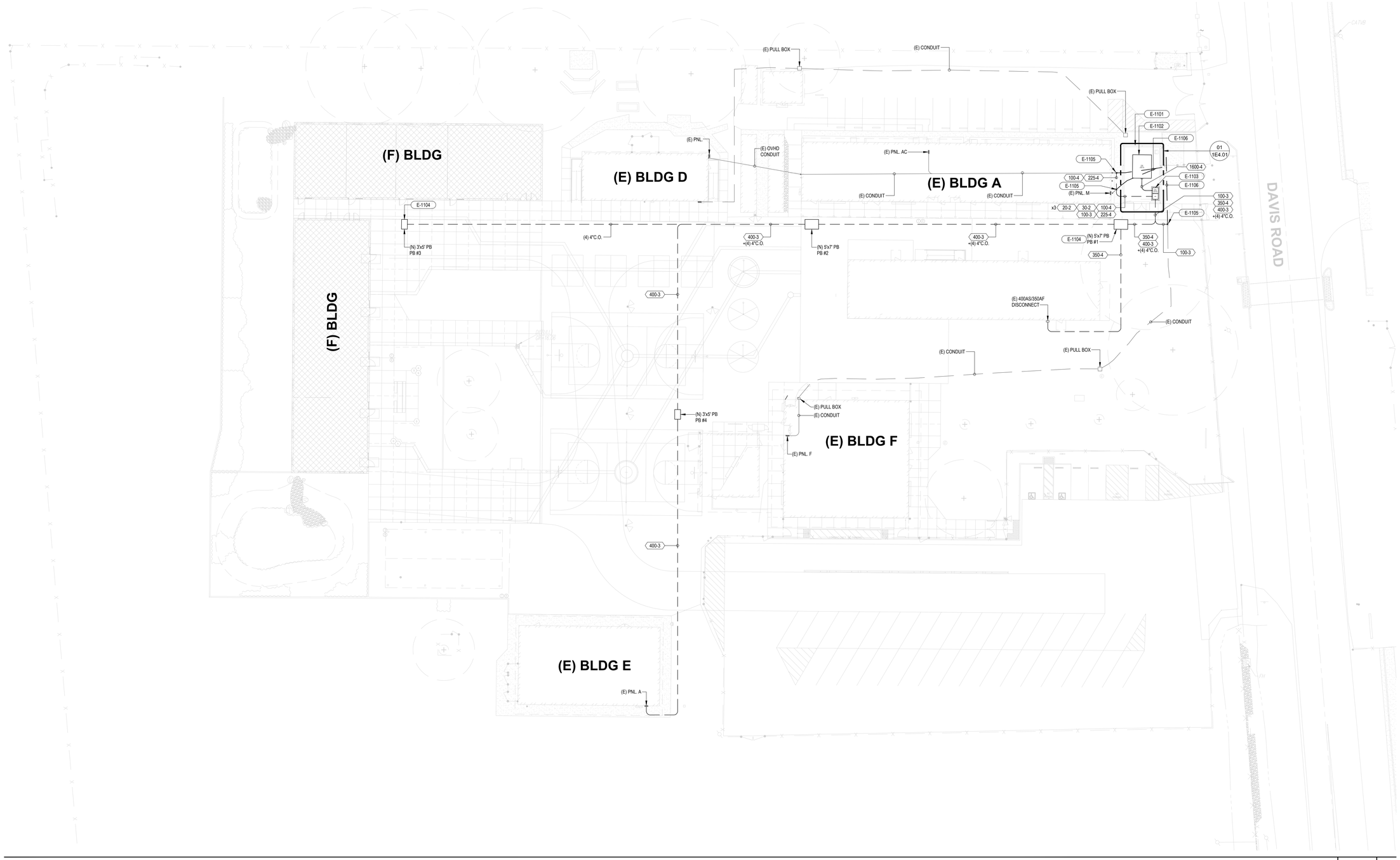

REMODEL ELECTRICAL SITE PLAN | 1" = 20'-0" | 05

GENERAL NOTES

1. REFER TO SHEET 1E0.02 FOR SITE GENERAL NOTES.
2. REFER TO SHEET 1E5.01 FOR ELECTRICAL SINGLE LINE DIAGRAM.
3. REFER TO SHEET 1E5.01 FOR FEEDER INFORMATION.

KEYNOTES

ITEM	DESCRIPTION
E-1101	NEW ELECTRICAL YARD. REFER TO LANDSCAPE DRAWING 1L1.01 FOR MORE INFORMATION.
E-1102	NEW 117"x144" CONCRETE PAD FOR NEW PG&E UTILITY TRANSFORMER. REFER TO CIVIL DETAIL 17/1C7.01 FOR CONCRETE PAD DETAIL.
E-1103	NEW MAIN SWITCHBOARD "MSB". 1600A, (2500A BUS), 208/120V, 3-PHASE, 4-WIRE. REFER TO DETAIL 01/1E7.01 FOR EQUIPMENT ANCHORAGE DETAIL AND INFORMATION.
E-1104	CAP (4) 4"C.O. INSIDE PULL BOX FOR FUTURE CONNECTION TO NEW MODULAR BUILDINGS.
E-1105	INTERCEPT EXISTING ELECTRICAL FEEDERS AND SPLICE WITH NEW ELECTRICAL FEEDERS. NEW FEEDERS TO MATCH EXISTING. EXTEND AND REROUTE EXISTING CONDUIT AS NEEDED.
E-1106	EXISTING CONDUIT AND FEEDERS TO BE DEMOLISHED.

IDENTIFICATION STAMP
DIV. OF THE STATE ARCHITECT
APP: 02-123848 INC: 01
REVIEWED FOR
SS ☑ FLS ☑ ACS ☑
DATE: 05/21/2026

LPA
ARCHITECTURE ENGINEERING INTERIOR DESIGN
LANDSCAPE ARCHITECTURE PLANNING
949-261-1001 Office
LPADesignStudios.com
5301 California Avenue, Suite 100
Irvine, California 92617

REGISTERED PROFESSIONAL ENGINEER
ALDO GERARDO BAUTISTA
E22255
3/31/26
ELECTRICAL
STATE OF CALIFORNIA

This document and all other project documents, ideas, aesthetics and designs incorporated therein are instruments of service. All project documents are copyright protected, are the property of LPA, Inc. (LPA) and cannot be lawfully used in whole or in part for any project or purpose except as set forth in the contractual agreement between LPA and its Client. The unauthorized disclosure and/or use of the project documents (including the creation of derivative works), may give rise to liability for copyright infringement, unlawful disclosure, use or misappropriation of property rights held by LPA. The unauthorized use of the project documents will give rise to the recovery of monetary losses and damages including attorney fees and costs for which the unauthorized user will be held liable.
Project documents describe the design intent of the work and are not a representation of as-built or existing conditions. LPA is not responsible for any discrepancies between the project documents and the existing conditions.

© LPA, Inc.

ELKHORN ELEMENTARY SCHOOL
CAMPUS MODERNIZATION INCREMENT 1

10505 DAVIS ROAD, STOCKTON, CA 95209

Developed for
LODI UNIFIED SCHOOL DISTRICT

Revision	Date

Submittal	Date
100% SCHEMATIC DESIGN	08/29/2025
DSA SUBMITTAL	12/18/2025
DSA BACKCHECK	04/09/2026

Job Number	31942
Checked By	AB
Scale	AS NOTED

REMODEL
ELECTRICAL
SITE PLAN

1E1.02

EXTERIOR LIGHTING FIXTURE SCHEDULE

			Electrical			Source					Manufacturer			
Type	Name	Description	Apparent Load	Voltage	Driver	Source	Lumens	CCT	CRI	BUG RATING	Manufacturer	Model Number		Mounting Details/ Mounting Height
ZN1	Compact Floodlight	"Compact Floodlight" series	48 VA	UNV	0-10V dimmable	LED	4225lm	3000K	90+	Exterior	BEGA	#B77653+K3-[FINISH]-[ACCESSORIES]		01/E7.10

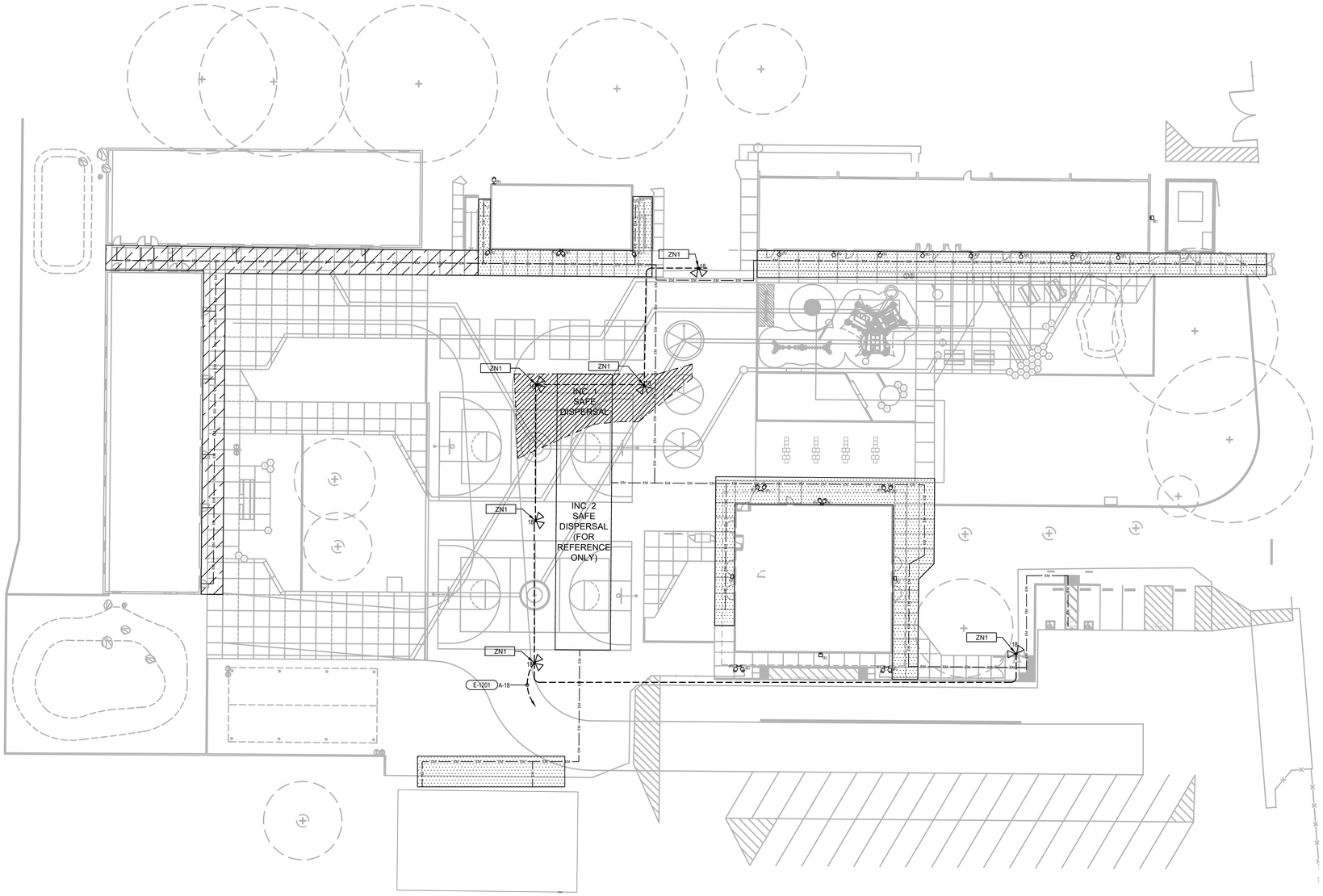

LIGHTING SITE PLAN | 1" = 20'-0" | 05

KEYNOTES

ITEM	DESCRIPTION
E-1201	ROUTE (1) 3/4"C, 2#12 + 1#12 GND. TO EXISTING CIRCUIT #18, FROM EXISTING PANEL "A" LOCATED ON THE SOUTH SIDE EXTERIOR OF BUILDING E.

LEGEND

- EXISTING BUILDING LIGHTING TO REMAIN
- FUTURE MODULAR BUILDINGS TO ILLUMINATE EM EGRESS WITH WALL MOUNTED FIXTURES AND/OR A FLOODLIGHT MOUNTED TO THE FUTURE MODULAR BUILDING
- FUTURE SAFE DISPERSAL AREA
- CURRENT SAFE DISPERSAL AREA
- EM EMERGENCY EGRESS PATH OF TRAVEL

GENERAL NOTES

1. (E) = EXISTING LIGHT FIXTURES TO REMAIN (CLEAN AND ENSURE ALL FIXTURES ARE IN WORKING CONDITION AND ARE AIMED CORRECTLY).
2. REFER TO 1E0.02 FOR SITE GENERAL NOTES.

IDENTIFICATION STAMP
DIV. OF THE STATE ARCHITECT
APP: 02-123848 INC: 01
REVIEWED FOR
SS ☑ FLS ☑ ACS ☑
DATE: 05/21/2026

LPA
ARCHITECTURE ENGINEERING INTERIOR DESIGN
LANDSCAPE ARCHITECTURE PLANNING
949-261-1001 Office
LPADesignStudios.com
5301 California Avenue, Suite 100
Irvine, California 92617

REGISTERED PROFESSIONAL ENGINEER
ALVO GERARDO BAUTISTA
E22252
3/31/28
ELECTRICAL
STATE OF CALIFORNIA

This document and all other project documents, ideas, aesthetics and designs incorporated therein are instruments of service. All project documents are copyright protected, are the property of LPA, Inc. (LPA) and cannot be lawfully used in whole or in part for any project or purpose except as set forth in the contractual agreement between LPA and its Client. The unauthorized disclosure and/or use of the project documents (including the creation of derivative works), may give rise to liability for copyright infringement, unlawful disclosure, use or misappropriation of property rights held by LPA. The unauthorized use of the project documents will give rise to the recovery of monetary losses and damages including attorney fees and costs for which the unauthorized user will be held liable.
Project documents describe the design intent of the work and are not a representation of as-built or existing conditions. LPA is not responsible for any discrepancies between the project documents and the existing conditions.

© LPA, Inc.

ELKHORN ELEMENTARY SCHOOL
CAMPUS MODERNIZATION INCREMENT 1

10505 DAVIS ROAD, STOCKTON, CA 95209

Developed for
LODI UNIFIED SCHOOL DISTRICT

Revision	Date

Submittal	Date
100% SCHEMATIC DESIGN	08/28/2025
DSA SUBMITTAL	12/18/2025
DSA BACKCHECK	04/08/2026

Job Number	31942
Checked By	AB
Scale	AS NOTED

LIGHTING
SITE PLAN

1E1.11

KEYNOTES

ITEM	DESCRIPTION
E-1701	NEW 117"x144" CONCRETE PAD FOR NEW PG&E UTILITY TRANSFORMER. REFER TO CIVIL DETAIL 17/1C7.01 FOR CONCRETE PAD DETAIL.
E-1702	NEW MAIN SWITCHBOARD "MSB", 1600A, (2500A BUS), 208/120V, 3-PHASE, 4-WIRE. REFER TO DETAIL 01/1E7.01 FOR EQUIPMENT ANCHORAGE DETAIL AND INFORMATION.
E-1703	REFER TO CIVIL DETAIL 17/1C7.01 FOR CONCRETE PAD DETAIL.
E-1704	ELECTRICAL YARD ENTRANCE/EXIT GATE TO BE PROVIDED WITH PANIC HARDWARE.
E-1705	ELECTRICAL YARD TO BE PROVIDED WITH KEY BOX FOR FIRE DEPARTMENT ACCESS.
E-1706	NEW ELECTRICAL YARD. REFER TO LANDSCAPE DRAWING 1L1.01 FOR MORE INFORMATION.

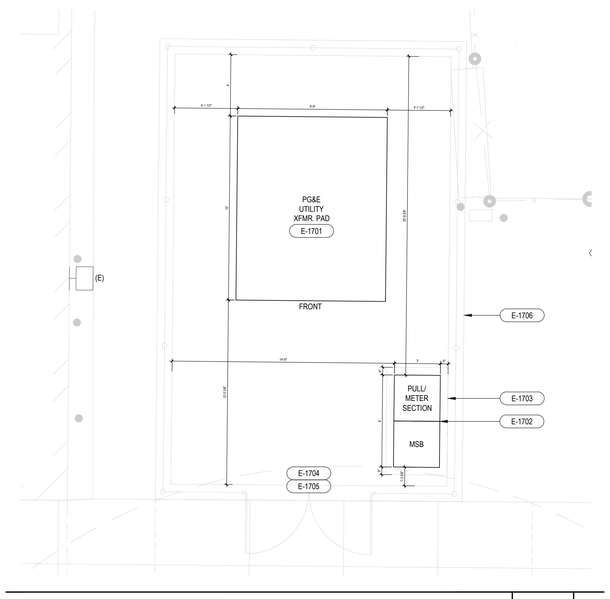

ENLARGED ELECTRICAL YARD | 1/4" = 1'-0" | 01

IDENTIFICATION STAMP
DIV. OF THE STATE ARCHITECT
APP: 02-123848 INC: 01
REVIEWED FOR
SS ☑ FLS ☑ ACS ☑
DATE: 05/21/2026

LPA

ARCHITECTURE ENGINEERING INTERIOR DESIGN
LANDSCAPE ARCHITECTURE PLANNING

949-261-1001 Office

LPADesignStudios.com

5301 California Avenue, Suite 100
Irvine, California 92617

REGISTERED PROFESSIONAL ENGINEER
ALDO GERARDO BAUTISTA
E22255
3/31/26
ELECTRICAL
STATE OF CALIFORNIA

This document and all other project documents, ideas, aesthetics and designs incorporated therein are instruments of service. All project documents are copyright protected, are the property of LPA, Inc. (LPA) and cannot be lawfully used in whole or in part for any project or purpose except as set forth in the contractual agreement between LPA and its Client. The unauthorized disclosure and/or use of the project documents (including the creation of derivative works), may give rise to liability for copyright infringement, unlawful disclosure, use or misappropriation of property rights held by LPA. The unauthorized use of the project documents will give rise to the recovery of monetary losses and damages including attorney fees and costs for which the unauthorized user will be held liable.
Project documents describe the design intent of the work and are not a representation of as-built or existing conditions. LPA is not responsible for any discrepancies between the project documents and the existing conditions.

© LPA, Inc.

ELKHORN ELEMENTARY SCHOOL
CAMPUS MODERNIZATION INCREMENT 1

10505 DAVIS ROAD, STOCKTON, CA 95209

Developed for
LODI UNIFIED SCHOOL DISTRICT

Revision	Date

Submittal	Date
100% SCHEMATIC DESIGN	08/29/2025
DSA SUBMITTAL	12/18/2025
DSA BACKCHECK	04/09/2026

Job Number	31942
Checked By	AB
Scale	AS NOTED

ENLARGED
ELECTRICAL
SITE PLAN

1E4.01

COPPER FEEDER SCHEDULE

MARK (AMPACITY)	CONDUITS # SETS	CONDUITS SIZE	CONDUCTORS PER SET Φ & N	CONDUCTORS PER SET GND	MARK (AMPACITY)	CONDUITS # SETS	CONDUITS SIZE	CONDUCTORS PER SET Φ	CONDUCTORS PER SET GND
20-2	1	3/4"	(2)12	12	---	---	---	---	---
30-2	1	3/4"	(2)10	10	---	---	---	---	---
100-4	1	1-1/2"	(4)1	6	**100-3**	1	1-1/2"	(3)1	6
225-4	1	2-1/2"	(4)4/0	4	---	---	---	---	---
350-4	1	4"	(4)500	2	---	---	---	---	---
---	---	---	---	---	**400-3**	3	4"	(3)400	2
1600-4	5	4"	(4)400	4/0	---	---	---	---	---

FEEDER SIZING NOTES

1. CONDUCTOR AND CONDUITSIZE SHOWN IN THIS SCHEDULE ARE BASED ON COPPER WIRE AND INSULATION TYPE (THHN/THWN) AT ONE HUNDRED (100') FEEDER LENGTH.
2. "+" IN FEEDER TAGS SHOWN ON PLANS INDICATES A FEEDER UPSIZED DUE TO VOLTAGE DROP.
3. CONDUIT SIZES CALLED OUT ON PLANS SUPERSEDE THIS SCHEDULE.
4. "S" INDICATES A FEEDER COMING FROM A SEPARATELY DERIVED SYSTEM.
5. NOMINAL AMPACITIES GREATER THAN 100 AMPS ARE FOR 75 DEG. C TERMINALS.
6. FEEDERS CONNECTED TO THE SECONDARY OF A K-4 OR HIGHER XFMR SHALL HAVE OVERSIZED NEUTRAL (200% MIN.)
7. FEEDERS CONNECTED TO AN EMERGENCY INVERTER OR PV SHALL BE RATED AT 90 DEG. C.
8. FEEDERS WITH AN AMPACITY ≥ 400A SHALL BE PROVIDED WITH A SPARE CONDUIT OF EQUIVALENT SIZE AND TYPE - AS NOTED.
9. NOT ALL SIZES USED.

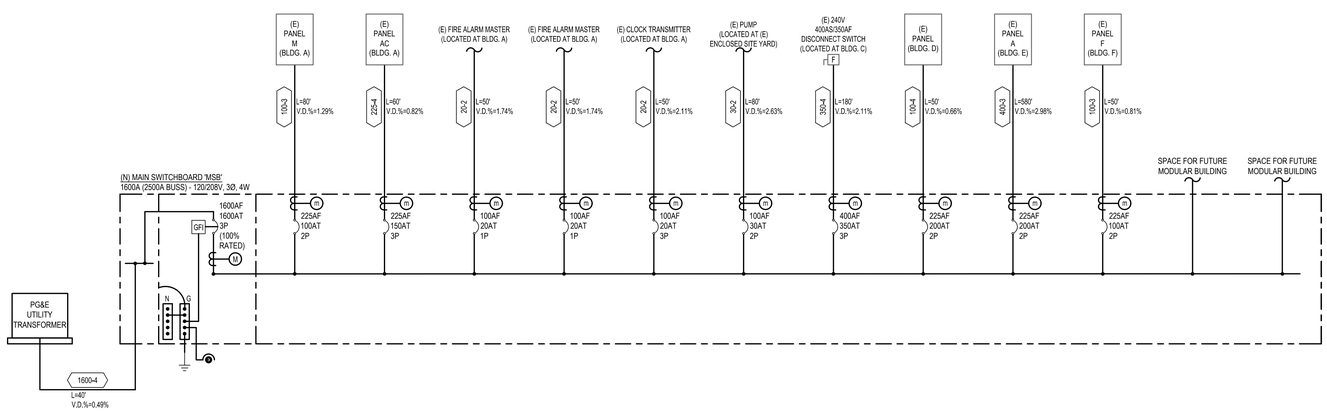

KEYNOTES

ITEM	DESCRIPTION
E-1001	-

GENERAL NOTES

1. ALL EQUIPMENT TO BE SQUARE D OR EQUAL BY SIEMENS, CUTLER-HAMMER, G.E., OR RSC-SIERRA.
2. ALL ELECTRICAL EQUIPMENT SHALL BE PROVIDED WITH SPECIFIED AND APPROPRIATE UL LISTING BASED ON THE ENVIRONMENT IN WHICH THE EQUIPMENT IS TO BE MOUNTED.
3. ALL ELECTRICAL EQUIPMENT SHALL BE PROVIDED WITH AND BRACED FOR REQUIRED FAULT CURRENT RATINGS BASED ON THEIR VOLTAGE AND LOCATION WITHIN THE SYSTEM. SHOP DRAWINGS TO INCLUDE FAULT CURRENT RATINGS FOR ALL ELECTRICAL EQUIPMENT. ALL EQUIPMENT SHALL BE FULLY RATED, NO SERIES RATING SHALL BE ALLOWED.
4. ALL TERMINATIONS AND ENCLOSURES SHALL BE RATED FOR USE WITH 75 DEGREES CELSIUS CONDUCTORS.
5. ALL SERVICE ENTRANCE EQUIPMENT/DISTRIBUTION BOARDS/SWITCHBOARDS RATED AT 600A OR GREATER SHALL BE PROVIDED WITH A SOLID STATE MAIN OVER-CURRENT PROTECTIVE DEVICE AND BUSSING RATED AT 100% OPERATION.
6. ALL SWITCH/DISTRIBUTION BOARDS SHALL BE PROVIDED WITH:
   a. TIN-PLATED ALUMINUM BUSSING WITH RECTANGULAR CROSS SECTION. HORIZONTAL AND VERTICAL BUSSING SHALL BE FULL LENGTH AND HAVE PROVISIONS FOR FUTURE EXTENSIONS WERE APPLICABLE. ALL BUSSING SHALL HAVE A MINIMUM WITHSTAND RATING EQUAL TO AVAILABLE FAULT CURRENT INDICATED ON THE AIC CALCULATION. ALL VERTICAL AND HORIZONTAL BUSSING SHALL BE RATED AT FULL CAPACITY IN ALL SWITCHBOARD AND DISTRIBUTION BOARD ASSEMBLIES. PROVIDE 100% NEUTRAL BUSSING MINIMUM - UNLESS OTHERWISE NOTED. PROVIDE FULL LENGTH GROUND BUSS, AND WHERE INDICATED ON PLANS, ISOLATED GROUND BUSSING. PROVIDE REAR WIRE WAY IN ALL SWITCHBOARD SECTIONS - UNLESS OTHERWISE NOTED OR REQUIRED.
   b. LUGS SHALL BE SUITABLE FOR USE WITH BOTH COPPER AND ALUMINUM CONDUCTORS AND 75 DEGREE CELSIUS AMPACITY CONDUCTORS.
   c. PERMANENT PLACARDS(S) MARKED PER THE SPECIFICATIONS AND PER CEC - WHERE ADOPTED SECTIONS 225.37, 230.2(E), 690.56(B) & (C), 692.56, 700.8, 701.9, AND 702.8 DENOTING PRESENCE OF ADDITIONAL SERVICES, PHOTOVOLTAIC SYSTEMS, FUEL EMERGENCY OR STAND-BY POWER SOURCES, ETC. AS APPLICABLE.
7. CONTRACTOR SHALL PROVIDE SWITCHBOARD SHOP DRAWINGS TO SERVING UTILITY COMPANY PRIOR TO FABRICATION OF EQUIPMENT. CONTRACTOR SHALL SECURE CONFIRMATION PROPOSED SWITCHBOARD COMPLIES WITH ELECTRICAL UTILITY COMPANY REGULATIONS.
8. ELECTRICAL EQUIPMENT SUBMITTALS SHALL BE ACCOMPANIED BY A 1/4" = 1'-0" SCALED DRAWING WHICH REFERENCES ALL ELECTRICAL EQUIPMENT ROOMS AND EQUIPMENT. DRAWING SHALL CLEARLY IDENTIFY ADEQUATE SPACE IS PROVIDED IN ELECTRICAL ROOMS TO ACCOMMODATE THE INSTALLATION OF ELECTRICAL EQUIPMENT WHILE MAINTAINING ALL REQUIRED CODE CLEARANCES. ALL SUBMITTALS NOT ACCOMPANIED BY SCALED DRAWING WILL BE REJECTED AS INCOMPLETE.
9. EC SHALL CONDUCT, WITH ASSISTANCE OF SWITCHGEAR MANUFACTURER, AN ELECTRICAL HAZARD ANALYSIS CONSISTING OF AN ARC FLASH, SHORT CIRCUIT, AND COORDINATION STUDY TO DETERMINE APPROPRIATE LEVELS OF PERSONNEL PROTECTIVE EQUIPMENT (PPE) AS REQUIRED BY NFPA 70E AND IEEE STD 1584, AND TO ENSURE PROPER COORDINATION (INCLUDING GROUND FAULT COORDINATION) EXISTS BETWEEN ALL OVER- CURRENT PROTECTIVE DEVICES SHOWN ON SINGLE-LINE DIAGRAM. ADDITIONALLY:
   a. STUDY SHALL INCLUDE ALL PORTIONS OF ELECTRICAL SINGLE-LINE DIAGRAM. NORMAL SYSTEM CONNECTIONS AND THOSE THAT RESULT IN MAXIMUM FAULT CONDITION SHALL BE ADEQUATELY COVERED IN THE STUDY. PERFORM STUDY WITH THE AID OF A COMPUTER PROGRAM, SKM CAPTOR, OR EQUAL. STUDY SHALL IDENTIFY SELECTIVE COORDINATION SUCH WILL TRIP FIRST. GROUND FAULT PORTION OF THE STUDY DEMONSTRATE COORDINATION OF MAIN BREAKER AND ANY FEEDER GROUND FAULT DEVICES WITH DOWNSTREAM CIRCUIT BREAKERS 30A AND LESS.
   b. EC SHALL BE RESPONSIBLE TO RECOMMEND SETTINGS OF ALL DEVICES AND TO NCLUDE GROUND FAULT SETTINGS NECESSARY TO ACHIEVE SYSTEM COORDINATION. CONTRACTOR SHALL FIELD ADJUST DEVICES ACCORDINGLY UTILIZING A QUALIFIED MANUFACTURER'S REPRESENTATIVE.
   c. DURING THE CONSTRUCTION PHASE OF THE PROJECT ALL GROUND FAULT RELAYS SHALL BE SET AT SHORTEST AVAILABLE TIME DELAY.
   d. RESULT OF COORDINATION STUDY SHALL BE SUBMITTED AS PART OF OVERALL SWITCHGEAR SUBMITTAL AND SHALL INCLUDE PROTECTIVE DEVICE TIME VERSUS CURRENT COORDINATION CURVES, GROUPING APPROPRIATE DEVICES TOGETHER, TABULATIONS OF RELAY AND CIRCUIT BREAKER TRIP SETTINGS, FUSE SELECTION, AND COMMENTARY REGARDING SAME.
   e. A GROUND FAULT SYSTEM TEST SHALL BE CONDUCTED BY AN INDEPENDENT TESTING AGENCY PER CEC - 230.95(C). GROUND FAULT SYSTEM TEST SHALL BE PERFORMED IN PRESENCE OF LOCAL AHJ VERIFICATION OF DEVICE SETTINGS PER THE COORDINATION STUDY SHALL BE PERFORMED BY SAME INDEPENDENT TESTING AGENCY. GROUND FAULT TEST RESULTS SHALL BE DELIVERED TO ENGINEER OF RECORD.
   f. PERFORM ARC FLASH ANALYSIS TO DETERMINE FALSH BOUNDARY, FLASH HAZARD CATEGORY, PPE REQUIREMENTS, AND MINIMUM ARC RATING (CALISQUARE CM). ABOVE INDICATED AT EACH ARC FLASH SOURCE ON A CEC COMPLIANT ARC FLASH HAZARD LABEL(S) AS MANUFACTURED BY BRADY.
10. GROUND ALL ELECTRICAL EQUIPMENT, BRANCH CIRCUITS, FEEDERS, PANEL AND DISTRIBUTION BOARDS, ELECTRICAL SERVICES, ETC. PER ADOPTED CEC ARTICLE 250.
11. FEEDER SPECIFICATIONS ARE BASED ON USE OF COPPER CONDUCTORS AND SHALL BE PROVIDED WITH A CODE SIZED COPPER GROUNDING CONDUCTOR.
12. ALL MAIN SWITCHBOARDS, PANELBOARDS, DISTRIBUTION BOARDS, ETC SHALL BE PROVIDED WITH A COPPER BUSS RATED AT SPECIFIED AMPACITY. ALL SWITCHBOARDS AND DISTRIBUTION BOARDS SHALL ALIGN IN FRONT. ALL PANELBOARDS SHALL BE PROVIDED WITH BOLT-ON BREAKERS, DEADFRONT COVERS WITH LOCKABLE DOORS, FACTORY INSTALLED MAIN CIRCUIT BREAKERS (IF APPLICABLE), AND PANEL DIRECTORY PER THESE DOCUMENTS.
13. TRANSIENT VOLTAGE SURGE PROTECTION SHALL BE PROVIDED IN ALL MAIN SWITCHGEAR AND DISTRIBUTION BOARD UNLESS OTHERWISE NOTED OR IDENTIFIED ON DRAWINGS. COORDINATE WITH LOCAL UTILITY COMPANY.
14. ALL PANELBOARDS INSTALLED IN GARAGES OR AREAS COMPLYING WITH ARTICLE 500, 511, AND/OR 514 SHALL BE INSTALLED 18" ABOVE FLOOR LINE TO BOTTOM OF PANEL AND SHALL BE IN MULTIPLE PANELS AS REQUIRED WITH TOP MOST BREAKER NO HIGHER THAN 6'-7" A.F.F. PER ARTICLE 380.
15. ALL ELECTRICAL EQUIPMENT (I.E. SWITCHGEAR, TRANSFORMERS, DISTRIBUTION BOARDS, PANELBOARDS, DISCONNECT SWITCHES, ETC.) SHALL BE PROVIDED WITH A PHENOLIC NAMEPLATE WITH ENGRAVED WHITE LETTERS REFERENCING FOLLOWING INFORMATION:

    LINE 1 - "EQUIPMENT NAME"
    LINE 2 - "FED FROM ..."
    LINE 3 - "VOLTAGE, AMPACITY, PHASE"
    LINE 4 - "DATE INSTALLED"

    NAMEPLATES SHALL BE SIZED BASED ON FOLLOWING:

    SWITCHBOARDS, DISTRIBUTION BOARDS, TRANSFORMERS:
    * LINE 1 = 1/2" LETTERS, LINES 2, 3, & 4 = 1/4" LETTERS

    PANELBOARDS, MOTOR CONTROL CENTERS, DISCONNECTS, STARTERS, ETC:
    * LINE 1 = 3/8" LETTERS, LINES 2, 3, & 4 = 1/4" LETTERS

    NAMEPLATE COLORS SHALL BE AS FOLLOWS:

    BLACK = NORMAL POWER
    RED = LIFE SAFETY/EMERGENCY POWER
    BLUE = STANDBY POWER
    GREEN = INVERTOR POWER

    ALL NAMEPLATES SHALL BE FASTENED WITH A MINIMUM OF TWO (2) MACHINE SCREWS. NO SELF ADHESIVE NAMEPLATES ARE ALLOWED.
16. ELECTRICAL DESIGN COMPUTES VOLTAGE DROP BASED ON FEEDER LENGTHS REFERENCED ON SINGLE-LINE DIAGRAM. EC TO NOTIFY ENGINEER OF RECORD IN EVENT FIELD CONDITIONS CAUSE A SUBSTANTIAL INCREASE IN OVERALL FEEDER LENGTH.
17. ANY FLOOR-STANDING ELECTRICAL EQUIPMENT (I.E. INVERTERS, DISTRIBUTION BOARDS, SWITCHBOARDS, ATS SWITCHES, MOTOR CONTROL CENTERS, ETC.) WHICH ARE MOUNTED AT/BELOW GRADE AND/OR SUSCEPTIBLE TO WATER DAMAGE SHALL BE MOUNTED ON A MINIMUM 4" HIGH HOUSEKEEPING PAD WHICH EXTENDS 4" BEYOND EQUIPMENT IN ALL DIRECTIONS.
18. ALL MOTOR RELATED CIRCUITS ARE TO BE PROVIDED WITH PROTECTIVE RELAYS FOR PHASE FAILURE AND UNDER-VOLTAGE.
19. ELECTRICAL CONTRACTOR TO INCLUDE IN BID ALL ASSOCIATED COSTS FOR THIRD PARTY TESTING OF ELECTRICAL EQUIPMENT, GROUND FAULT, CONDUCTORS, ETC..

IDENTIFICATION STAMP
DIV. OF THE STATE ARCHITECT
APP: 02-123848 INC: 01
REVIEWED FOR
SS ☑ FLS ☑ ACS ☑
DATE: 05/21/2026

LPA
ARCHITECTURE ENGINEERING INTERIOR DESIGN
LANDSCAPE ARCHITECTURE PLANNING
949-261-1001 Office
LPADesignStudios.com
5301 California Avenue, Suite 100
Irvine, California 92617

REGISTERED PROFESSIONAL ENGINEER ALEJO GERARDO BAUTISTA E22252 3/31/26 ELECTRICAL STATE OF CALIFORNIA

This document and all other project documents, ideas, aesthetics and designs incorporated therein are instruments of service. All project documents are copyright protected, are the property of LPA, Inc. (LPA) and cannot be lawfully used in whole or in part for any project or purpose except as set forth in the contractual agreement between LPA and its Client. The unauthorized disclosure and/or use of the project documents (including the creation of derivative works), may give rise to liability for copyright infringement, unlawful disclosure, use or misappropriation of property rights held by LPA. The unauthorized use of the project documents will give rise to the recovery of monetary losses and damages including attorney fees and costs for which the unauthorized user will be held liable.
Project documents describe the design intent of the work and are not a representation of as-built or existing conditions. LPA is not responsible for any discrepancies between the project documents and the existing conditions.

© LPA, Inc.

ELKHORN ELEMENTARY SCHOOL
CAMPUS MODERNIZATION INCREMENT 1

10505 DAVIS ROAD, STOCKTON, CA 95209

Developed for
LODI UNIFIED SCHOOL DISTRICT

Revision	Date

Submittal	Date
100% SCHEMATIC DESIGN	08/28/2025
DSA SUBMITTAL	12/19/2025
DSA BACKCHECK	04/08/2026

Job Number	31942
Checked By	AB
Scale	AS NOTED

ELECTRICAL SINGLE LINE DIAGRAM

1E5.01

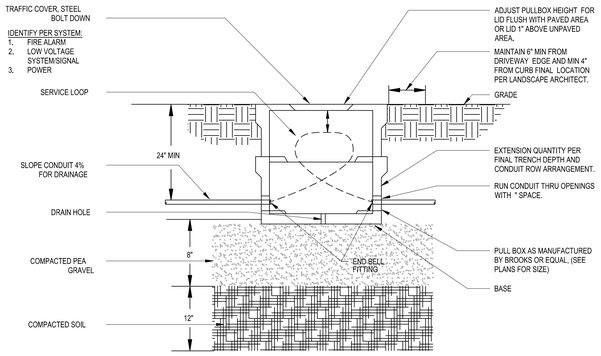

PULL BOX NOTES:

1. ALL BOXES SHALL BE SET ON A GRAVEL BASE WITH ¼" DIAMETER GRAVEL. DEPTHS PER DETAIL.
2. ALL INCIDENTAL CONCRETE SHALL BE REMOVED FROM BOXES.
3. PROVIDE WATERTIGHT SPLICES AND CAPS FOR POWER CONDUCTORS.
4. PROVIDE SEALING GEL IN ALL CONDUITS (BOTH W/ CONDUCTORS AND IN EMPTY SPARE CONDUITS.) GEL SHALL BE INSERTED IN THE CONDUIT TO A DEPTH OF 6" AND FLUSH W/ THE END OF THE CONDUIT. THE GEL SHALL BE MANUFACTURED BY 3M #4442 RE-ENTERABLE ENCAPSULANT.
5. PROVIDE IDENTIFYING TAGS ON ALL POWER AND COMMUNICATION CONDUCTORS IN PULL-BOXES.
6. PULLBOX SHALL BE SIZED PER N.E.C. REQUIREMENTS.
7. SEE PULL-BOX/MAN-HOLE GROUNDING DETAIL FOR ADDITIONAL GROUNDING INFORMATION.

LPA

PULL BOX | 12" = 1'-0" | 19

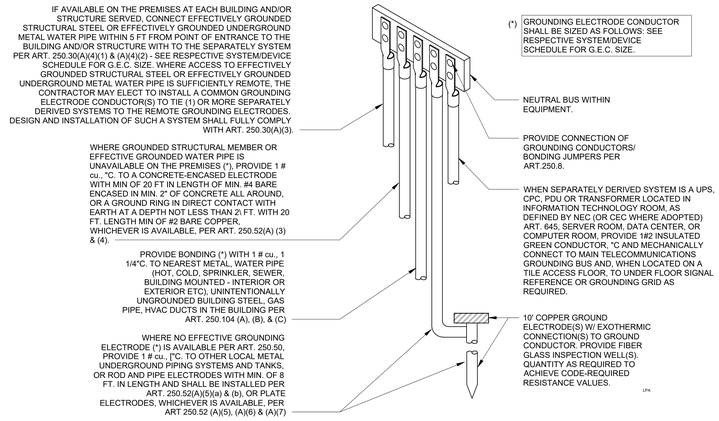

LPA

SEPARATELY DERIVED SYSTEM GROUND | N.T.S. | 11

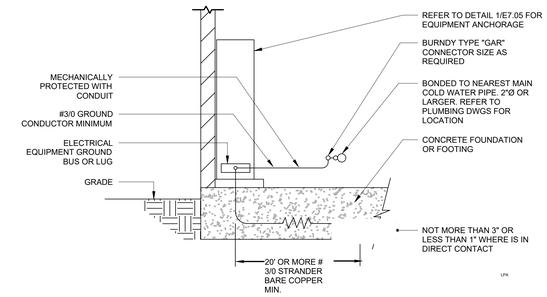

LPA

SWITCHBOARD UFER GROUND | N.T.S. | 04

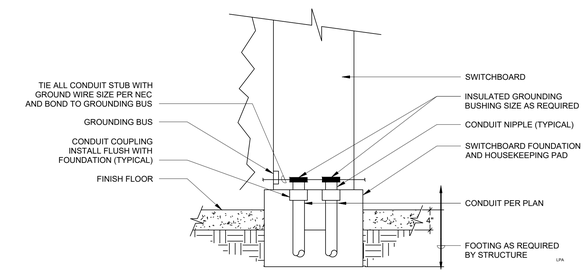

LPA

SWITCHBOARD STUB-UPS AND GROUNDING BOND | N.T.S. | 03

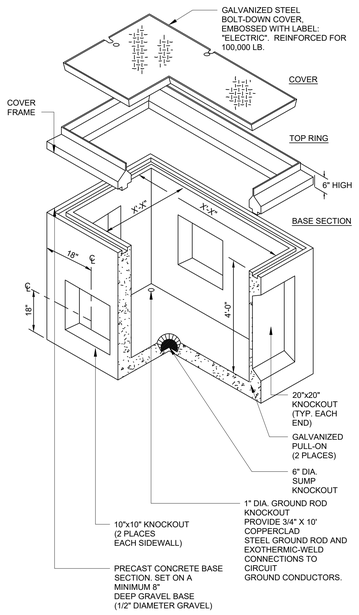

PULL BOX NOTES:

1. ALL BOXES SHALL BE SET ON A MINIMUM 12" GRAVEL BASE WITH 3/8"-3/4" DIAMETER GRAVEL.
2. ALL INCIDENTAL CONCRETE SHALL BE REMOVED FROM BOXES.
3. PROVIDE SEALING GEL IN ALL CONDUITS (BOTH W/ CONDUCTORS AND IN EMPTY SPARE CONDUITS). THE GEL SHALL BE INSERTED IN THE CONDUIT TO A DEPTH OF 6" AND FLUSH W/ THE END OF THE CONDUIT. THE GEL SHALL BE MANUFACTURED BY 3M #4442 RE-ENTERABLE ENCAPSULANT.
4. PROVIDE IDENTIFYING TAGS ON ALL CONDUCTORS IN PULL-BOXES.
5. HAND-HOLES SHALL BE PROVIDED WITH MINIMUM OF (4) GALVANIZED PULLING PLATES IN BOTTOM OF PULL-BOX.
6. PULL-BOXES SHALL BE PROVIDED WITH CAST IN PLACE VERTICAL CABLE RACKS. ALL CABLES SHALL BE NEATLY BUNDLED, ORGANIZED AND SUPPORTED BY CABLE RACKS.
7. ALL "SPARE" OR UNUSED CONDUITS TO BE LOCATED ON TOP.
8. PULL-BOX DIMENSIONS PER DRAWINGS

3'x5' PULL BOX | 1" = 1'-0" | 21

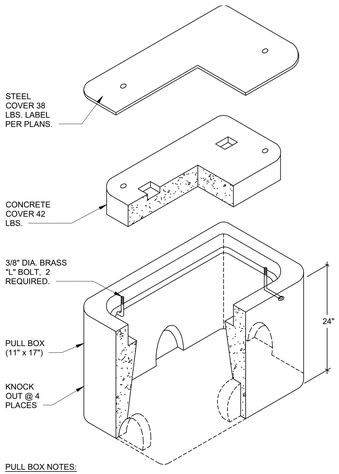

PULL BOX NOTES:

1. ALL BOXES SHALL BE SET ON A MINIMUM 8" GRAVEL BASE WITH 1/2" DIAMETER GRAVEL.
2. ALL INCIDENTAL CONCRETE SHALL BE REMOVED FROM BOXES.
3. ALL CONDUITS SHALL HAVE RIGID STEEL RISERS TERMINATING 4" BELOW THE COVER OF THE PULL BOX.
4. THE RIGID STEEL SHALL BE WRAPPED W/2", HALF-LAPPED 3M INSULATING TAPE OR APPROVED BITUMINOUS COATING (ALL SURFACES). SUBMIT METHOD FOR APPROVAL.
5. PROVIDE WATERTIGHT SPLICES AND CAPS FOR COMMUNICATION AND POWER CONDUCTORS.
6. PROVIDE SEALING GEL IN ALL CONDUITS (BOTH W/ CONDUCTORS AND IN EMPTY SPARE CONDUITS.) THE GEL SHALL BE INSERTED IN THE CONDUIT TO A DEPTH OF 6" AND FLUSH WITH THE END OF THE CONDUIT. THE GEL SHALL BE MANUFACTURED BY WATERGUARD INDUSTRIES ONLY.
7. PROVIDE IDENTIFYING TAGS ON ALL POWER AND COMMUNICATION CONDUCTORS IN PULL BOXES.
8. SEE PULL-BOX/MAN-HOLE GROUNDING DETAIL FOR ADDITIONAL GROUNDING INFORMATION.

LPA

11x17 PULL BOX | 1" = 1'-0" | 17

***	TELECOMMUNICATIONS GROUND CONDUCTOR MINIMUM SIZE SHALL BE BASED ON DISTANCE BETWEEN TELECOMMUNICATIONS ROOM AND SYSTEM GROUNDING BUS BAR AS FOLLOWS:	
	0-200 FT.	#1/0
	OVER 200 FT.	#3/0
	MAIN BONDING JUMPER SHALL BE SIZED AS FOLLOWS:	
	SERVICE SIZE	M.B.J. SIZE
	0-1,000A	#3/0
	1,200A	#4/0
**	1,600A	#250KCMIL
	2,000A	#300KCMIL
	2,500A	#500KCMIL
	3,000A	#500KCMIL
	4,000A	#600KCMIL
	GROUNDING ELECTRODE CONDUCTOR SHALL BE SIZED AS FOLLOWS:	
*	SERVICE SIZE	G.E.C. SIZE
	0-200A	#4
	201-400A	#1/0
	OVER 401A	#3/0

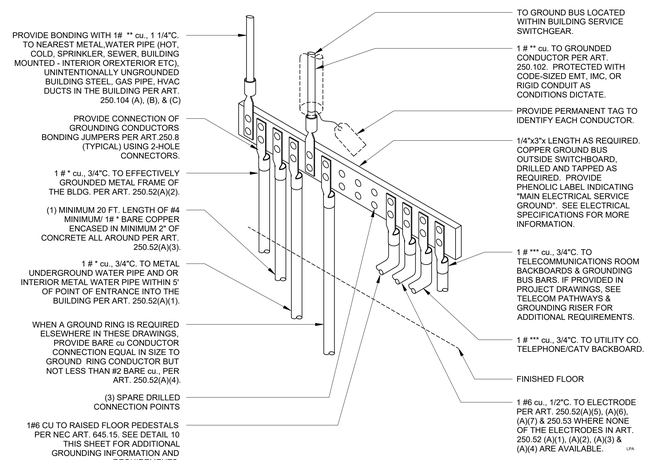

LPA

MAIN SYSTEM GROUND BUS - MSGB | N.T.S. | 09

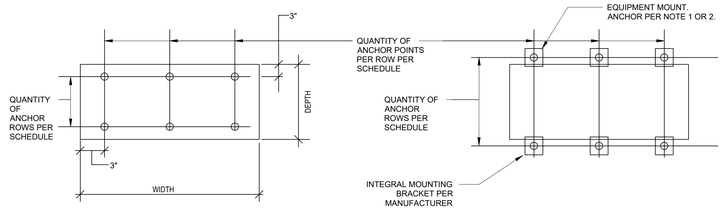

PLAN VIEW INTERIOR MOUNTING

PLAN VIEW EXTERIOR MOUNTING

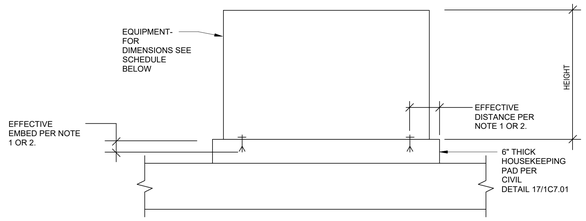

AT SLAB ON GRADE

TYPICAL ELEVATION

ANCHORAGE SCHEDULE - FLOOR MOUNTED EQUIPMENT

EQUIPMENT	WEIGHT (lbs)	HEIGHT (in)	WIDTH (in)	DEPTH (in)	MECHANICAL ANCHORS (PER GENERAL NOTES) - SEE NOTE 1 & 2			
					MECH'L ANCH. Ø	QUANTITY OF ANCHOR ROWS	QUANTITY OF ANCHOR POINTS PER ROW	QUANTITY OF ANCHS. PER POINT
MSB	1600	90	108	43	1/2"	2	3	1

NOTES:

1. AT MECHANICAL UNITS WITH ANCHOR POINTS PER MANUFACTURER. HOLE DIAMETER NOT TO EXCEED BOLT DIAMETER +1/8", PROVIDE LARGER ANCHOR DIAMETER AS REQUIRED.
2. INSTALL HILTI KB-TZ2 CARBON STEEL EXPANSION ANCHOR PER ICC-ESR EVALUATION REPORT ESR-4266 WITH SPECIAL INSPECTION. WHERE MECHANICAL ANCHOR IS EXPOSED TO WEATHER/MOISTURE, PROVIDE STAINLESS STEEL ANCHOR CONFORMING TO THE ICC-ES EVALUATION REPORT IN LIEU OF CARBON STEEL.
   a. FOR 1/2" DIAMETER MECHANICAL ANCHOR, PROVIDE MINIMUM 3 1/4" MINIMUM EMBED, MINIMUM 6" THICK CONCRETE EDGE DISTANCE, AND MINIMUM 8" SPACING IN MINIMUM 3,000 psi NORMAL WT CONCRETE PAD. INSTALL WITH 40 ft-lb INSTALLATION TORQUE.

LPA

TYPICAL BOTTOM MOUNTED EQUIPMENT SCHEDULE AND DETAILS1 | N.T.S. | 01

IDENTIFICATION STAMP
DIV. OF THE STATE ARCHITECT
APP: 02-123848 INC: 01
REVIEWED FOR
SS ☑ FLS ☑ ACS ☑
DATE: 05/21/2026

LPA
ARCHITECTURE ENGINEERING INTERIOR DESIGN
LANDSCAPE ARCHITECTURE PLANNING
949-261-1001 Office
LPADesignStudios.com
5301 California Avenue, Suite 100
Irvine, California 92617

REGISTERED PROFESSIONAL ENGINEER ALEO GERARDO BATTIST E22252 3/31/28 ELECTRICAL STATE OF CALIFORNIA

This document and all other project documents, ideas, aesthetics and designs incorporated therein are instruments of service. All project documents are copyright protected, are the property of LPA, Inc. (LPA) and cannot be lawfully used in whole or in part for any project or purpose except as set forth in the contractual agreement between LPA and its Client. The unauthorized disclosure and/or use of the project documents (including the creation of derivative works), may give rise to liability for copyright infringement, unlawful disclosure, use or misappropriation of property rights held by LPA. The unauthorized use of the project documents will give rise to the recovery of monetary losses and damages including attorney fees and costs for which the unauthorized user will be held liable.
Project documents describe the design intent of the work and are not a representation of as-built or existing conditions. LPA is not responsible for any discrepancies between the project documents and the existing conditions.

© LPA, Inc.

ELKHORN ELEMENTARY SCHOOL
CAMPUS MODERNIZATION INCREMENT 1

10505 DAVIS ROAD, STOCKTON, CA 95209

Developed for
LODI UNIFIED SCHOOL DISTRICT

Revision	Date

Submittal	Date
100% SCHEMATIC DESIGN	08/28/2025
DSA SUBMITTAL	12/18/2025
DSA BACK-CHECK	04/09/2026

Job Number	31942
Checked By	AB
Scale	AS NOTED

ELECTRICAL DETAILS

1E7.01

NOTES

1. #6 VERTICAL REBARS WITH #4 TIES @12" O.C. LOCATE FIRST (3) TIES WITHIN 5" OF TOP OF CASSION
2. BOND EQUIPMENT GROUND TO POLE.
3. BRANCH CIRCUIT CONDUIT PER SITE PLAN.
4. PROVIDE MINIMUM COVER OF 24" FROM FINISH GRADE.
5. POLE ANCHOR BOLTS PER MANUFACTURER SPEC'S. (PROVIDE EXTENDED BOLTS FOR THRU CONCRETE PAD)
6. CONCRETE F'C = 3000 PSI AT 28 DAYS.

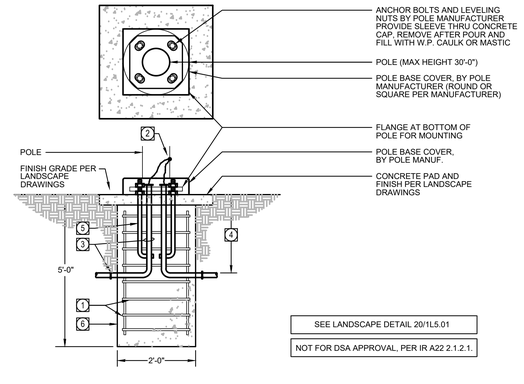

SEE LANDSCAPE DETAIL 20/1L5.01

NOT FOR DSA APPROVAL, PER IR A22 2.1.2.1.

POLE WITH CONCRETE PAD | N.T.S. | 01

IDENTIFICATION STAMP
DIV. OF THE STATE ARCHITECT
APP: 02-123848 INC: 01
REVIEWED FOR
SS ☑ FLS ☑ ACS ☑
DATE: 05/21/2026

LPA

ARCHITECTURE ENGINEERING INTERIOR DESIGN
LANDSCAPE ARCHITECTURE PLANNING

949-261-1001 Office

LPADesignStudios.com

5301 California Avenue, Suite 100
Irvine, California 92617

REGISTERED PROFESSIONAL ENGINEER
ALDO GERARDO BAUTISTA
E22255
3/31/26
ELECTRICAL
STATE OF CALIFORNIA

This document and all other project documents, ideas, aesthetics and designs incorporated therein are instruments of service. All project documents are copyright protected, are the property of LPA, Inc. (LPA) and cannot be lawfully used in whole or in part for any project or purpose except as set forth in the contractual agreement between LPA and its Client. The unauthorized disclosure and/or use of the project documents (including the creation of derivative works), may give rise to liability for copyright infringement, unlawful disclosure, use or misappropriation of property rights held by LPA. The unauthorized use of the project documents will give rise to the recovery of monetary losses and damages including attorney fees and costs for which the unauthorized user will be held liable.
Project documents describe the design intent of the work and are not a representation of as-built or existing conditions. LPA is not responsible for any discrepancies between the project documents and the existing conditions.

© LPA, Inc.

ELKHORN ELEMENTARY SCHOOL
CAMPUS MODERNIZATION INCREMENT 1

10505 DAVIS ROAD, STOCKTON, CA 95209

Developed for
LODI UNIFIED SCHOOL DISTRICT

Revision	Date

Submittal	Date
100% SCHEMATIC DESIGN	08/29/2025
DSA SUBMITTAL	12/18/2025
DSA BACKCHECK	04/09/2026

Job Number	31942
Checked By	AB
Scale	AS NOTED

LIGHTING DETAIL

1E7.10

STATE OF CALIFORNIA

Outdoor Lighting

CALIFORNIA ENERGY COMMISSION

CERTIFICATE OF COMPLIANCE		NRCC-LTO-E
This document is used to demonstrate compliance with requirements in 110.9, 130.0, 130.2, 140.7, and 141.0(b)2L for outdoor lighting scopes using the prescriptive path for nonresidential and hotel/motel occupancies. It is also used to document compliance with requirements in 160.5, 170.2(e)6, 180.1(a) and 180.2(b)4Bv for outdoor lighting scopes using the prescriptive path for multifamily and mixed-use occupancies. Multifamily includes dormitory and senior living facilities.		
Project Name: LUSD Elkhorn Elementary School Renovations	**Report Page:**	**(Page 1 of 7)**
Project Address:	**Date Prepared:**	2025-12-16T21:11:04-05:00

A. GENERAL INFORMATION

01	Project Location (city)	Stockton	04	Total Illuminated Hardscape Area (ft^2)	26251
02	Climate Zone	12			
03	Outdoor Lighting Zone per Title 24 Part 1 10.114 or as designated by Authority Having Jurisdiction (AHJ):				
☐	LZ-0: Very Low - Undeveloped Parkland	☐ LZ-2: Moderate - Urban Clusters	☐ LZ-4: High - Must be reviewed by CA Energy Commission for Approval		
☐	LZ-1: Low - Rural Areas	☒ LZ-3: Moderately High - Urban Areas			
05	Occupancy Types within Project				
● Classroom					

B. PROJECT SCOPE

This table includes outdoor lighting systems that are within the scope of the permit application and are demonstrating compliance using the prescriptive path outlined in 140.7 / 170.2(e)6 or 141.0(b)2L / 180.2(b)4Bv for alterations.

My Project Consists of:

01	02	
☒ New Lighting System	Must Comply with Allowances from 140.7 / 170.2(e)6	
☐ Altered Lighting System	Is your alteration increasing the connected lighting load (Watts)?	○ Yes ○ No
03	04	05
% of Existing Luminaires Being Altered[1]	Sum Total of Luminaires Being Added or Altered	Calculation Method
☐ < 10% ☐ >= 10% and < 50% ☐ >= 50%		

Please proceed to Table F. Outdoor Lighting Fixture Schedule to define the project's luminaires.

[1] FOOTNOTES: % of Existing Luminaires Being Altered = (Sum Total of Luminaires Being Added or Altered / Existing Luminaires within the Scope of the Permit Application) x 100.

STATE OF CALIFORNIA
Outdoor Lighting
CALIFORNIA ENERGY COMMISSION
CERTIFICATE OF COMPLIANCE NRCC-LTO-E
Project Name: LUSD Elkhorn Elementary School Renovations

Report Page: (Page 2 of 7)

Date Prepared: 2025-12-16T21:11:04-05:00

C. COMPLIANCE RESULTS

Results in this table are automatically calculated from data input and calculations in Tables F through N. Note: If any cell on this table says "COMPLIES with Exceptional Conditions" refer to Table D. Exceptional Conditions for guidance or see applicable Table referenced below.

Calculations of Total Allowed Lighting Power (Watts) 140.7 / 170.2(e)6 or 141.0(b)2L / 180.2(b)4Bv												Compliance Results
01		02		03		04		05		06		07		08	09
General Hardscape Allowance 140.7(d)1 / 170.2(e)6 (See Table I)	+	Per Application 140.7(d)2 / 170.2(e)6 (See Table J)	+	Sales Frontage 140.7(d)2 (See Table K)	+	Ornamental 140.7(d)2 / 170.2(e)6 (See Table L)	+	Per Specific Area 140.7(d)2 / 170.2(e)6 (See Table M)	OR	Existing Power Allowance 141.0(b)2L / 180.2(b)4Bv (See Table N)	=	**Total Allowed** (Watts)	≥	**Total Actual** (Watts)	**07 must be >= 08**
989.87	+	---	+	---	+	---	+	---	OR	---	=	989.87	≥	576	COMPLIES
Shielding Compliance (See Table G for Details)												N/A			
Controls Compliance (See Table H for Details)												COMPLIES			

D. EXCEPTIONAL CONDITIONS

This table is auto-filled with uneditable comments because of selections made or data entered in tables throughout the form.

E. ADDITIONAL REMARKS

This table includes remarks made by the permit applicant to the Authority Having Jurisdiction.

CA Building Energy Efficiency Standards - 2022 Nonresidential Compliance
Generated Date/Time:
Report Version: 2022.0.000
Schema Version: rev 20220101
Documentation Software: Energy Code Ace
Compliance ID: 355164-1225-0002
Report Generated: 2025-12-16 18:11:07

STATE OF CALIFORNIA
Outdoor Lighting
CALIFORNIA ENERGY COMMISSION
CERTIFICATE OF COMPLIANCE NRCC-LTO-E
Project Name: LUSD Elkhorn Elementary School Renovations

Report Page: (Page 3 of 7)

Date Prepared: 2025-12-16T21:11:04-05:00

F. OUTDOOR LIGHTING FIXTURE SCHEDULE

For new or altered lighting systems demonstrating compliance with 140.7 / 170.2(e)6 all new luminaires being installed and any existing luminaires remaining or being moved within the spaces covered by the permit application are included in the Table below. For altered lighting systems using the Existing Power method per 141.0(b)2L only new luminaires being installed and replacement luminaires being installed as part of the project scope are included (ie, existing luminaires remaining or existing luminaires being moved are not included). Outdoor lighting attached to multifamily buildings and controlled from the inside of a dwelling unit are included in Table H. and are not included here. All other multifamily outdoor lighting is included here.

Designed Wattage:

01	02		03	04	05	06	07	08	09	10	
Name or Item Tag	Complete Luminaire Description		Watts per luminaire[1, 2]	How is Wattage determined	Total Number Luminaires[2]	Luminaire Status[3]	Excluded per 140.7(a) / 170.2(e)6A	Design Watts	Cutoff Req. > 6,200 initial lumen output 130.2(b) /160.5(c)1[4]	Field Inspector	
										Pass	Fail
ZN1	Pole mounted LED compact floodlight	☐ Linear	48	Mfr. Spec	12	New	☐	576	NA: < 6200 lumens	☐	☐
Total Design Watts:								576			

* NOTES: Selections with a * require a note in the space below explaining how compliance is achieved.
EX: Luminaire is lighting a statue; EXCEPTION 2 to 130.2(b)

[1] FOOTNOTES: Authority Having Jurisdiction may ask for Luminaire cut sheets to confirm wattage used for compliance per 130.0(c) / 160.5(b)
[2] For linear luminaires, wattage should be indicated as W/lf instead of Watts/luminaire. Total linear feet should be indicated in column 05 instead of number of luminaires.
[3] Select "New" for new luminaires in a new outdoor lighting project, or for added luminaires in an alteration. Select "Altered" for replacement luminaires in an alteration. Select "Existing to Remain" for existing luminaires within the project scope that are not being altered and are remaining. Select "Existing Reinstalled" for existing luminaires which are being removed and reinstalled as part of the project scope.
[4] Compliance with mandatory shielding requirements is required for luminaires with initial lumen output >= 6,200 unless exempted by 130.2(b)/ 160.5(c)

G. SHIELDING REQUIREMENTS (BUG)

This section does not apply to this project.

CA Building Energy Efficiency Standards - 2022 Nonresidential Compliance
Generated Date/Time:
Report Version: 2022.0.000
Schema Version: rev 20220101
Documentation Software: Energy Code Ace
Compliance ID: 355164-1225-0002
Report Generated: 2025-12-16 18:11:07

STATE OF CALIFORNIA
Outdoor Lighting
CALIFORNIA ENERGY COMMISSION
CERTIFICATE OF COMPLIANCE NRCC-LTO-E
Project Name: LUSD Elkhorn Elementary School Renovations

Report Page: (Page 4 of 7)

Date Prepared: 2025-12-16T21:11:04-05:00

H. OUTDOOR LIGHTING CONTROLS

This table demonstrates compliance with controls requirements for all new or altered luminaires installed as part of the permit application. For alteration projects, luminaires which are existing to remain (ie untouched) and luminaires which are removed and reinstalled (wiring only) do not need to be included in this table even if they are within the spaces covered by the permit application.
Outdoor lighting for nonresidential buildings, parking garages and common service areas in multifamily buildings must be documented separately from outdoor lighting attached to multifamily buildings and controlled from the inside of a dwelling unit

Mandatory Controls for Nonresidential Occupancies, Parking Garages & Common Areas in Multifamily Buildings

01	02	03	04	05	
Area Description	Shut-Off 130.2(c)1 / 160.5(c)	Auto-Schedule 130.2(c)2 / 160.5(c)	Motion Sensor 130.2(c)3 / 160.5(c)	Field Inspector	
				Pass	Fail
Pedestrian Hardscape: "ZN1"	Astronomical Timer	Provided	NA: >=24 ft	☐	☐

[1] FOOTNOTE: Text has been abbreviated, please refer to Table 160.5-A to confirm compliance with the specific light source technologies listed.
[2] Authority having jurisdiction may ask for cutsheets or other documentation to confirm compliance of light source.
[3] Recessed luminaires marked for use in fire-rated installations, and recessed luminaires installed in non-insulated ceilings are excepted from ii and iii.

CA Building Energy Efficiency Standards - 2022 Nonresidential Compliance
Generated Date/Time:
Report Version: 2022.0.000
Schema Version: rev 20220101
Documentation Software: Energy Code Ace
Compliance ID: 355164-1225-0002
Report Generated: 2025-12-16 18:11:07

STATE OF CALIFORNIA
Outdoor Lighting
CALIFORNIA ENERGY COMMISSION
CERTIFICATE OF COMPLIANCE NRCC-LTO-E
Project Name: LUSD Elkhorn Elementary School Renovations

Report Page: (Page 5 of 7)

Date Prepared: 2025-12-16T21:11:04-05:00

I. LIGHTING POWER ALLOWANCE (per 140.7 /170.2(e))

This table includes areas using allowance calculations per 140.7 /170.2(e). General Hardscape Allowance is per Table 140.7-A/Table 170.2-R while "Use it or lose it" Allowances are per Table 140.7-B /Table 170.2-S. Indicate which allowances are being used to expand sections for user input. Luminaires that qualify for one of the "Use it or lose it" allowances shall not qualify for another "Use it or lose it" allowance.
Outdoor lighting attached to multifamily buildings and controlled from the inside of a dwelling unit are included in Table H. and are not included here. All other multifamily outdoor lighting is included here.

	01			
	"Use it or lose it" Allowance (select all that apply) (select all that apply)			
☒ General Hardscape Allowance Table I (below)	☐ Per Application Table J	☐ Sales Frontage Table K	☐ Ornamental Table L	☐ Per Specific Area Table M

Calculated General Hardscape Lighting Power Allowance per Table 140.7-A for Nonresidential & Hotel/Motel

02	03	04	05	06	07	08	09
Area Description	Area Wattage Allowance (AWA)			Linear Wattage Allowance (LWA)			Total General AWA + LWA (Watts)
	Illuminated Area (ft^2)	Allowed Density (W/ft^2)	Area Allowance (Watts)	Perimeter Length (lf)	Allowed Density (W/lf)	Linear Allowance (Watts)	
Pedestrian Hardscape	26251	0.021	551.27	943	0.2	188.6	739.87
Initial Wattage Allowance for Entire Site (Watts):							250
Instances of Initial Wattage Allowance (LZ 0 only)[1]							
Total General Hardscape Allowance (Watts):							989.87

J. LIGHTING ALLOWANCE: PER APPLICATION

This section does not apply to this project.

K. LIGHTING ALLOWANCE: SALES FRONTAGE

This section does not apply to this project.

L. LIGHTING ALLOWANCE: ORNAMENTAL

This section does not apply to this project.

CA Building Energy Efficiency Standards - 2022 Nonresidential Compliance
Generated Date/Time:
Report Version: 2022.0.000
Schema Version: rev 20220101
Documentation Software: Energy Code Ace
Compliance ID: 355164-1225-0002
Report Generated: 2025-12-16 18:11:07

STATE OF CALIFORNIA
Outdoor Lighting
CALIFORNIA ENERGY COMMISSION
CERTIFICATE OF COMPLIANCE NRCC-LTO-E
Project Name: LUSD Elkhorn Elementary School Renovations

Report Page: (Page 6 of 7)

Date Prepared: 2025-12-16T21:11:04-05:00

M. LIGHTING ALLOWANCE: PER SPECIFIC AREA

This section does not apply to this project.

N. EXISTING CONDITIONS POWER ALLOWANCE (alterations only)

This section does not apply to this project.

O. DECLARATION OF REQUIRED CERTIFICATES OF INSTALLATION

Selections have been made based on information provided in this document. If any selection has been changed by permit applicant, an explanation should be included in Table E. Additional Remarks. These documents must be provided to the building inspector during construction and can be found online

Form/Title
NRCI-LTO-E - Must be submitted for all buildings

P. DECLARATION OF REQUIRED CERTIFICATES OF ACCEPTANCE

Selections have been made based on information provided in this document. If any selection has been changed by permit applicant, an explanation should be included in Table E. Additional Remarks. These documents must be provided to the building inspector during construction and must be completed through an Acceptance Test Technician Certification Provider (ATTCP). For more information visit: http://www.energy.ca.gov/title24/attcp/providers.html

Form/Title	Systems/Spaces To Be Field Verified
NRCA-LTO-02-A - Must be submitted for all outdoor lighting controls except for alterations where controls are added to <= 20 luminaires.	Pedestrian Hardscape: "ZN1"

CA Building Energy Efficiency Standards - 2022 Nonresidential Compliance
Generated Date/Time:
Report Version: 2022.0.000
Schema Version: rev 20220101
Documentation Software: Energy Code Ace
Compliance ID: 355164-1225-0002
Report Generated: 2025-12-16 18:11:07

STATE OF CALIFORNIA
Outdoor Lighting
CALIFORNIA ENERGY COMMISSION
CERTIFICATE OF COMPLIANCE NRCC-LTO-E
Project Name: LUSD Elkhorn Elementary School Renovations

Report Page: (Page 7 of 7)

Date Prepared: 2025-12-16T21:11:04-05:00

DOCUMENTATION AUTHOR'S DECLARATION STATEMENT

I certify that this Certificate of Compliance documentation is accurate and complete.

Documentation Author Name: Aldo Bacuzzi	Documentation Author Signature:
Company: LPA Design Studios, Inc.	Signature Date: 2025-12-16
Address: 5301 California Ave, Suite #100	CEA/ HERS Certification Identification (if applicable):
City/State/Zip: Irvine CA 92617	Phone: (949) 261-1001

RESPONSIBLE PERSON'S DECLARATION STATEMENT

I certify the following under penalty of perjury, under the laws of the State of California:

1. The information provided on this Certificate of Compliance is true and correct.
2. I am eligible under Division 3 of the Business and Professions Code to accept responsibility for the building design or system design identified on this Certificate of Compliance (responsible designer)
3. The energy features and performance specifications, materials, components, and manufactured devices for the building design or system design identified on this Certificate of Compliance conform to the requirements of Title 24, Part 1 and Part 6 of the California Code of Regulations.
4. The building design features or system design features identified on this Certificate of Compliance are consistent with the information provided on other applicable compliance documents, worksheets, calculations, plans and specifications submitted to the enforcement agency for approval with this building permit application.
5. I will ensure that a completed signed copy of this Certificate of Compliance shall be made available with the building permit(s) issued for the building, and made available to the enforcement agency for all applicable inspections. I understand that a completed signed copy of this Certificate of Compliance is required to be included with the documentation the builder provides to the building owner at occupancy.

Responsible Designer Name: Aldo Bacuzzi	Responsible Designer Signature:
Company: LPA Design Studios, Inc.	Date Signed: 2025-12-16
Address: 5301 California Ave, Suite #100	License: E22215
City/State/Zip: Irvine CA 92617	Phone: (949) 261-1001

CA Building Energy Efficiency Standards - 2022 Nonresidential Compliance
Generated Date/Time:
Report Version: 2022.0.000
Schema Version: rev 20220101
Documentation Software: Energy Code Ace
Compliance ID: 355164-1225-0002
Report Generated: 2025-12-16 18:11:07

IDENTIFICATION STAMP
DIV. OF THE STATE ARCHITECT
APP: 02-123848 INC: 01
REVIEWED FOR
SS ☑ FLS ☑ ACS ☑
DATE: 05/21/2026

LPA
ARCHITECTURE ENGINEERING INTERIOR DESIGN
LANDSCAPE ARCHITECTURE PLANNING
949-261-1001 Office
LPADesignStudios.com
5301 California Avenue, Suite 100
Irvine, California 92617

REGISTERED PROFESSIONAL ENGINEER ALDO GERARDO BACUZZI E22215 3/31/26 ELECTRICAL STATE OF CALIFORNIA

This document and all other project documents, ideas, aesthetics and designs incorporated therein are instruments of service. All project documents are copyright protected, are the property of LPA, Inc. (LPA) and cannot be lawfully used in whole or in part for any project or purpose except as set forth in the contractual agreement between LPA and its Client. The unauthorized disclosure and/or use of the project documents (including the creation of derivative works), may give rise to liability for copyright infringement, unlawful disclosure, use or misappropriation of property rights held by LPA. The unauthorized use of the project documents will give rise to the recovery of monetary losses and damages including attorney fees and costs for which the unauthorized user will be held liable.
Project documents describe the design intent of the work and are not a representation of as-built or existing conditions. LPA is not responsible for any discrepancies between the project documents and the existing conditions.

© LPA, Inc.

ELKHORN ELEMENTARY SCHOOL
CAMPUS MODERNIZATION INCREMENT 1

10505 DAVIS ROAD, STOCKTON, CA 95209

Developed for
LODI UNIFIED SCHOOL DISTRICT

Revision	Date

Submittal	Date
100% SCHEMATIC DESIGN	08/29/2025
DSA SUBMITTAL	12/19/2025
DSA 1st CITY CHECK	04/09/2026

Job Number	31942
Checked By	AB
Scale	AS NOTED

ENERGY
COMPLIANCE FORMS

1E8.01

STATE OF CALIFORNIA

Electrical Power Distribution

CALIFORNIA ENERGY COMMISSION

CERTIFICATE OF COMPLIANCE		NRCC-ELC-E
Project Name: LUSD Elkhorn Elementary School Renovations	Report Page:	(Page 1 of 6)
Project Address:	Date Prepared:	2025-12-16T22:04:13-05:00

This document is used to demonstrate compliance with mandatory requirements in 130.5, for electrical systems in newly constructed nonresidential and hotel/motel occupancies and 160.6 and 160.9 for electrical systems in newly constructed multifamily occupancies. Additions and alterations to electrical service systems in nonresidential and hotel/motel occupancies will also use this document to demonstrate compliance per 141.0(a) or 141.0(b)2P for alterations. For multifamily addition or alterations compliance will be documented per 180.1(a) or 180.2 (b)4Bwii

A. GENERAL INFORMATION

01	Project Location (city)	Stockton	02	Climate Zone	12
			03	Occupancy Types Within Project:	Classroom

B. PROJECT SCOPE

This table includes electrical systems that are within the scope of the permit application.

01	02	03	04	05	06	07
Electrical Service Designation/ Description	Scope of Work [1]	Rating[2] (kVA)	Utility Provided Metering System Exception to 130.5(a)/160.6(a)[3]	System subject to CA Elec Code Article 517 Exception to 130.5(a)and (b)	Demand Response Controls	Provides power to dwelling units/common living areas only in multifamily occupancy
New 1600A, 120/208V, 3 Phase, 4 Wire service	New electrical service equipment and meter	576	☒	☐	Where required, demand response controls must be specified which are capable of receiving and automatically responding to at least one standards based messaging protocol which enables demand response after receiving a demand response signal. Sections 120.2/160.3, 130.1/160.5, and 130.3/160.5, and mechanical, indoor lighting, and sign lighting Certificate of Compliance documents will indicate when demand response controls are required.	☐

[1] FOOTNOTES: Adding only new feeders and branch circuits triggers Voltage Drop 130.5(c)/160.6(c), no other requirements from 130.5/160.6 are required.
[2] If common use areas in a multifamily are submetered, rating is for submeter size serving common use areas.
[3] Applicable if the utility company is providing a metering system that indicates instantaneous kW demand and kWh for a utility-defined period.

STATE OF CALIFORNIA
Electrical Power Distribution
CALIFORNIA ENERGY COMMISSION

CERTIFICATE OF COMPLIANCE		NRCC-ELC-E
Project Name: LUSD Elkhorn Elementary School Renovations	Report Page:	(Page 2 of 6)
	Date Prepared:	2025-12-16T22:04:13-05:00

C. COMPLIANCE RESULTS

Results in this table are automatically calculated from data input and calculations in Tables F through J. Note: If any cell on this table says "COMPLIES with Exceptional Conditions" refer to Table D. Exceptional Conditions for guidance or see applicable Table referenced below.

01		02		03		04	05	06
Service Electrical Metering 130.5(a)/ 160.6(a) (See Table F)	AND	Separation for Monitoring 130.5(b)/ 160.6(b) (See Table G)	AND	Voltage Drop 130.5(c)/ 160.6(c) (See Table H)	AND	Controlled Receptacles 130.5(d)/ 160.6(d) (See Table I)	Electric Ready 160.9 (See Table J)	**Compliance Results**
	AND	Yes	AND	Yes	AND	Yes		COMPLIES with Exceptional Conditions

D. EXCEPTIONAL CONDITIONS

This table is auto-filled with uneditable comments because of selections made or data entered in tables throughout the form.

Table B indicates the project is exempt from 130.5(a) Service Electrical Metering requirements because the utility company has provided the project a metering system that indicates instantaneous kW demand and kWh for a utility-defined period.

E. ADDITIONAL REMARKS

This table includes remarks made by the permit applicant to the Authority Having Jurisdiction.

STATE OF CALIFORNIA
Electrical Power Distribution
CALIFORNIA ENERGY COMMISSION

CERTIFICATE OF COMPLIANCE		NRCC-ELC-E
Project Name: LUSD Elkhorn Elementary School Renovations	Report Page:	(Page 3 of 6)
	Date Prepared:	2025-12-16T22:04:13-05:00

G. SEPARATION OF ELECTRICAL CIRCUITS FOR ENERGY MONITORING

This table includes entirely new or complete replacement electrical power distribution systems to demonstrate compliance with 130.5(b)/160.6(b). Any load types that are not included in the service do not need to be shown. For multifamily occupancies, submetered systems that provide power to dwelling units do not need to meet these separation requirements and therefore load types on those submetered systems also do not need to be shown.

01	02	03	04	05	
Load Type per Table 130.5-B [1]	Minimum Required Separation of Load per Table 130.5-B	Compliance Method[2]	Location of Requirements in Construction Documents	Field Inspector	
				Pass	Fail
New 1600A, 120/208V, 3 Phase, 4 Wire service					
Renewable power sources (net or total)	Each group	Method 2: Switchboards/ motor control centers/ panelboard supply other distribution equipment with loads disaggregated for each load type	1E1.02 & 1E5.01	☐	☐
Loads associated with renewable power sources	All loads in aggregate	Method 2: Switchboards/ motor control centers/ panelboard supply other distribution equipment with loads disaggregated for each load type	1E1.02 & 1E5.01	☐	☐

** NOTES: If "Other*" is selected under Compliance Method above, please indicate how compliance has been achieved in the space provided below.*

[1] FOOTNOTES: For each separate load type, up to 10% of the connected load may be of any type.
[2] Method 1: Switchboards/ motor control centers/ panelboard loads disaggregated for each load type.
Method 2: Switchboards/ motor control centers/ panelboard supply other distribution equipment with loads disaggregated for each load type.
Method 3: Branch circuits serve load types individually and provisions for adding future branch circuit monitoring.
Method 4: Complete metering system measures and reports loads by type.
See Chapter 8 of the Nonresidential Compliance Manual for more detail on Compliance Methods.

STATE OF CALIFORNIA
Electrical Power Distribution
CALIFORNIA ENERGY COMMISSION

CERTIFICATE OF COMPLIANCE		NRCC-ELC-E
Project Name: LUSD Elkhorn Elementary School Renovations	Report Page:	(Page 4 of 6)
	Date Prepared:	2025-12-16T22:04:13-05:00

H. VOLTAGE DROP

This table includes entirely new or complete replacement electrical power distribution systems, or alterations that add, modify or replace both feeders and branch circuits to demonstrate compliance with 130.5(c)/ 160.6(c). For alterations, only the altered circuits must demonstrate compliance per 141.0(b)2Pii/ 180.2(b)4Bviic.

01	02				03	04	05	
Electrical Service Designation/Description	Combined Voltage Drop on Installed Feeder/Branch Circuit Conductors Compliance Method				Location of Voltage Drop Calculations[1]	Sheet Number for Voltage Drop Calculations in Construction Documents	Field Inspector	
							Pass	Fail
New 1600A, 120/208V, 3 Phase, 4 Wire service	☒	Voltage drop less than 5%	☐	Permitted by CA Elec Code (Exception to 130.5(c))*	In construction documents	1E5.01	☐	☐

** NOTES: If "Permitted by CA Elec Code *" is selected under Compliance Method above, please indicate where the exception applies in the space provided below.*

[1] FOOTNOTES: Voltage drop calculations may be attached to the permit application outside the construction documents if allowed by the Authority Having Jurisdiction. Select "attached" if applicable. If calculations will be the responsibility of the installing contractor, select "Contractor Responsible".

I. CIRCUIT CONTROLS FOR 120-VOLT RECEPTACLES AND CONTROLLED RECEPTACLES

This table includes entirely new or complete replacement electrical power distribution systems to demonstrate compliance with 130.5(d)/ 160.6(d).. Both controlled and uncontrolled receptacles must be provided in office areas, lobbies, conference rooms, kitchen areas in office spaces, copy rooms and hotel/motel guest rooms.

01	02	03	04	05	06	07	
Room name or Description	Location/ Type of Controlled Receptacles[1]	Shut-Off Controls	Demand Responsive Controls	Permanent Durable Marking Will be Used	Location of Requirements in Construction Documents	Field Inspector	
						Pass	Fail
N/A	---	---		☐		☐	☐

** NOTES: If "Other*" is selected under Shut-Off Controls above, please indicate how compliance has been achieved in the space provided below.*

[1] FOOTNOTES: Receptacles dedicated to refrigerators and water dispensers in kitchens, located a minimum of 6ft above the floor specifically for clocks, network copiers, fax machines, A/V and data equipment other than personal computers in copy rooms, circuits rated more than 20 Amps, or connected to a UPS that are intended to be in continuous use and are marked to differentiate them from other receptacles or circuits are excepted from the requirements. .

STATE OF CALIFORNIA
Electrical Power Distribution
CALIFORNIA ENERGY COMMISSION

CERTIFICATE OF COMPLIANCE		NRCC-ELC-E
Project Name: LUSD Elkhorn Elementary School Renovations	Report Page:	(Page 5 of 6)
	Date Prepared:	2025-12-16T22:04:13-05:00

K. DECLARATION OF REQUIRED CERTIFICATES OF INSTALLATION

Selections have been made based on information provided in this document. If any selection have been changed by permit applicant, an explanation should be included in Table E. Additional Remarks. These documents must be provided to the building inspector during construction and can be found online

Form/Title
NRCI-ELC-E - Must be submitted for all buildings

L. DECLARATION OF REQUIRED CERTIFICATES OF ACCEPTANCE

There are no NRCA forms required for this project.

STATE OF CALIFORNIA
Electrical Power Distribution
CALIFORNIA ENERGY COMMISSION

CERTIFICATE OF COMPLIANCE		NRCC-ELC-E
Project Name: LUSD Elkhorn Elementary School Renovations	Report Page:	(Page 6 of 6)
Project Address:	Date Prepared:	2025-12-16T22:04:13-05:00

DOCUMENTATION AUTHOR'S DECLARATION STATEMENT

I certify that this Certificate of Compliance documentation is accurate and complete.

Documentation Author Name: Aldo Bacuzzi	Documentation Author Signature:
Company: LPA Design Studios, Inc.	Signature Date: 2025-12-16
Address: 5301 California Ave, Suite #100	CEA/ HERS Certification Identification (if applicable):
City/State/Zip: Irvine CA 92617	Phone: (949) 261-1001

RESPONSIBLE PERSON'S DECLARATION STATEMENT

I certify the following under penalty of perjury, under the laws of the State of California:

1. The information provided on this Certificate of Compliance is true and correct.
2. I am eligible under Division 3 of the Business and Professions Code to accept responsibility for the building design or system design identified on this Certificate of Compliance (responsible designer)
3. The energy features and performance specifications, materials, components, and manufactured devices for the building design or system design identified on this Certificate of Compliance conform to the requirements of Title 24, Part 1 and Part 6 of the California Code of Regulations.
4. The building design features or system design features identified on this Certificate of Compliance are consistent with the information provided on other applicable compliance documents, worksheets, calculations, plans and specifications submitted to the enforcement agency for approval with this building permit application.
5. I will ensure that a completed signed copy of this Certificate of Compliance shall be made available with the building permit(s) issued for the building, and made available to the enforcement agency for all applicable inspections. I understand that a completed signed copy of this Certificate of Compliance is required to be included with the documentation the builder provides to the building owner at occupancy.

Responsible Designer Name: Aldo Bacuzzi	Responsible Designer Signature:
Company: LPA Design Studios, Inc.	Date Signed: 2025-12-16
Address: 5301 California Ave, Suite #100	License: E22215
City/State/Zip: Irvine CA 92617	Phone: (949) 261-1001

IDENTIFICATION STAMP
DIV. OF THE STATE ARCHITECT
APP: 02-123848 INC: 01
REVIEWED FOR
SS ☑ FLS ☑ ACS ☑
DATE: 05/21/2026

LPA

ARCHITECTURE ENGINEERING INTERIOR DESIGN
LANDSCAPE ARCHITECTURE PLANNING

949-261-1001 Office
LPADesignStudios.com
5301 California Avenue, Suite 100
Irvine, California 92617

REGISTERED PROFESSIONAL ENGINEER
ALDO GERARDO BACUZZI
E22215
3/31/26
ELECTRICAL
STATE OF CALIFORNIA

This document and all other project documents, ideas, aesthetics and designs incorporated therein are instruments of service. All project documents are copyright protected, are the property of LPA, Inc. (LPA) and cannot be lawfully used in whole or in part for any project or purpose except as set forth in the contractual agreement between LPA and its Client. The unauthorized disclosure and/or use of the project documents (including the creation of derivative works), may give rise to liability for copyright infringement, unlawful disclosure, use or misappropriation of property rights held by LPA. The unauthorized use of the project documents will give rise to the recovery of monetary losses and damages including attorney fees and costs for which the unauthorized user will be held liable.
Project documents describe the design intent of the work and are not a representation of as-built or existing conditions. LPA is not responsible for any discrepancies between the project documents and the existing conditions.

© LPA, Inc.

ELKHORN ELEMENTARY SCHOOL
CAMPUS MODERNIZATION INCREMENT 1

10505 DAVIS ROAD, STOCKTON, CA 95209

Developed for
LODI UNIFIED SCHOOL DISTRICT

Revision	Date

Submittal	Date
100% SCHEMATIC DESIGN	08/29/2025
DSA SUBMITTAL	12/18/2025
DSA BACK/CHECK	04/09/2026

Job Number	31942
Checked By	AB
Scale	AS NOTED

ENERGY
COMPLIANCE FORMS

1E8.02

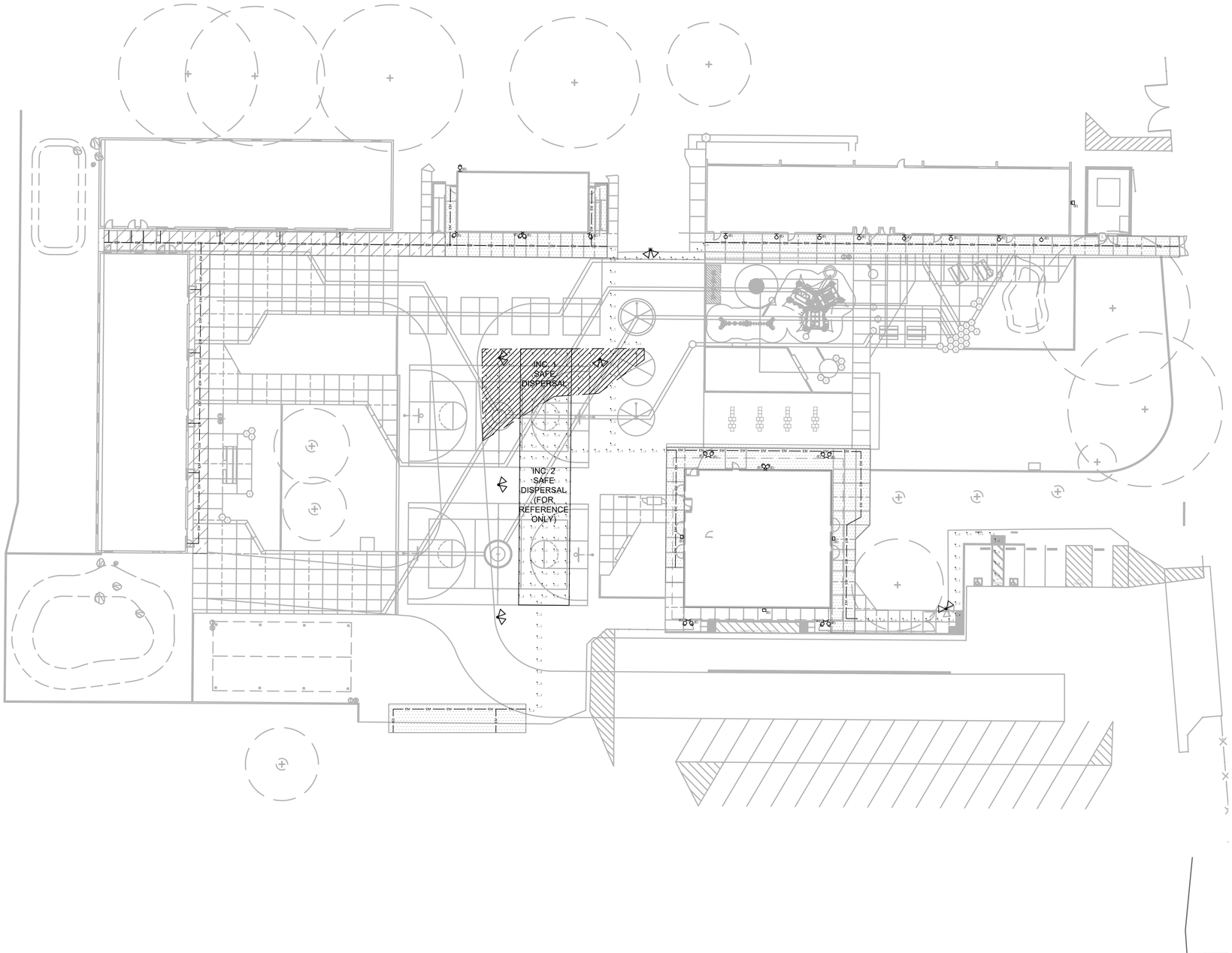

PHOTOMETRIC SITE PLAN | 1" = 20'-0" | 05

KEYNOTES

LEGEND

- EXISTING BUILDING LIGHTING TO REMAIN
- FUTURE MODULAR BUILDINGS TO ILLUMINATE EM EGRESS WITH WALL MOUNTED FIXTURES AND/OR A FLOODLIGHT MOUNTED TO THE FUTURE MODULAR BUILDING
- FUTURE SAFE DISPERSAL AREA
- CURRENT SAFE DISPERSAL AREA
- EM — EMERGENCY EGRESS PATH OF TRAVEL

GENERAL NOTES

(E) EXISTING LIGHT FIXTURES TO REMAIN (CLEAN AND ENSURE ALL FIXTURES ARE IN WORKING CONDITION AND ARE AIMED CORRECTLY)

IDENTIFICATION STAMP
DIV. OF THE STATE ARCHITECT
APP: 02-123848 INC: 01
REVIEWED FOR
SS ☑ FLS ☑ ACS ☑
DATE: 05/21/2026

LPA
ARCHITECTURE ENGINEERING INTERIOR DESIGN
LANDSCAPE ARCHITECTURE PLANNING
949-261-1001 Office
LPADesignStudios.com
5301 California Avenue, Suite 100
Irvine, California 92617

REGISTERED PROFESSIONAL ENGINEER
ALDO GERARDO BAUTISTA
E22125
3/31/26
ELECTRICAL
STATE OF CALIFORNIA

This document and all other project documents, ideas, aesthetics and designs incorporated therein are instruments of service. All project documents are copyright protected, are the property of LPA, Inc. (LPA) and cannot be lawfully used in whole or in part for any project or purpose except as set forth in the contractual agreement between LPA and its Client. The unauthorized disclosure and/or use of the project documents (including the creation of derivative works), may give rise to liability for copyright infringement, unlawful disclosure, use or misappropriation of property rights held by LPA. The unauthorized use of the project documents will give rise to the recovery of monetary losses and damages including attorney fees and costs for which the unauthorized user will be held liable.
Project documents describe the design intent of the work and are not a representation of as-built or existing conditions. LPA is not responsible for any discrepancies between the project documents and the existing conditions.

© LPA, Inc.

ELKHORN ELEMENTARY SCHOOL
CAMPUS MODERNIZATION INCREMENT 1

10505 DAVIS ROAD, STOCKTON, CA 95209

Developed for
LODI UNIFIED SCHOOL DISTRICT

Revision	Date

Submittal	Date
100% SCHEMATIC DESIGN	08/28/2025
DSA SUBMITTAL	12/18/2025
DSA BACKCHECK	04/09/2026

Job Number	31942
Checked By	AB
Scale	AS NOTED

PHOTOMETRIC
SITE PLAN

1E9.11

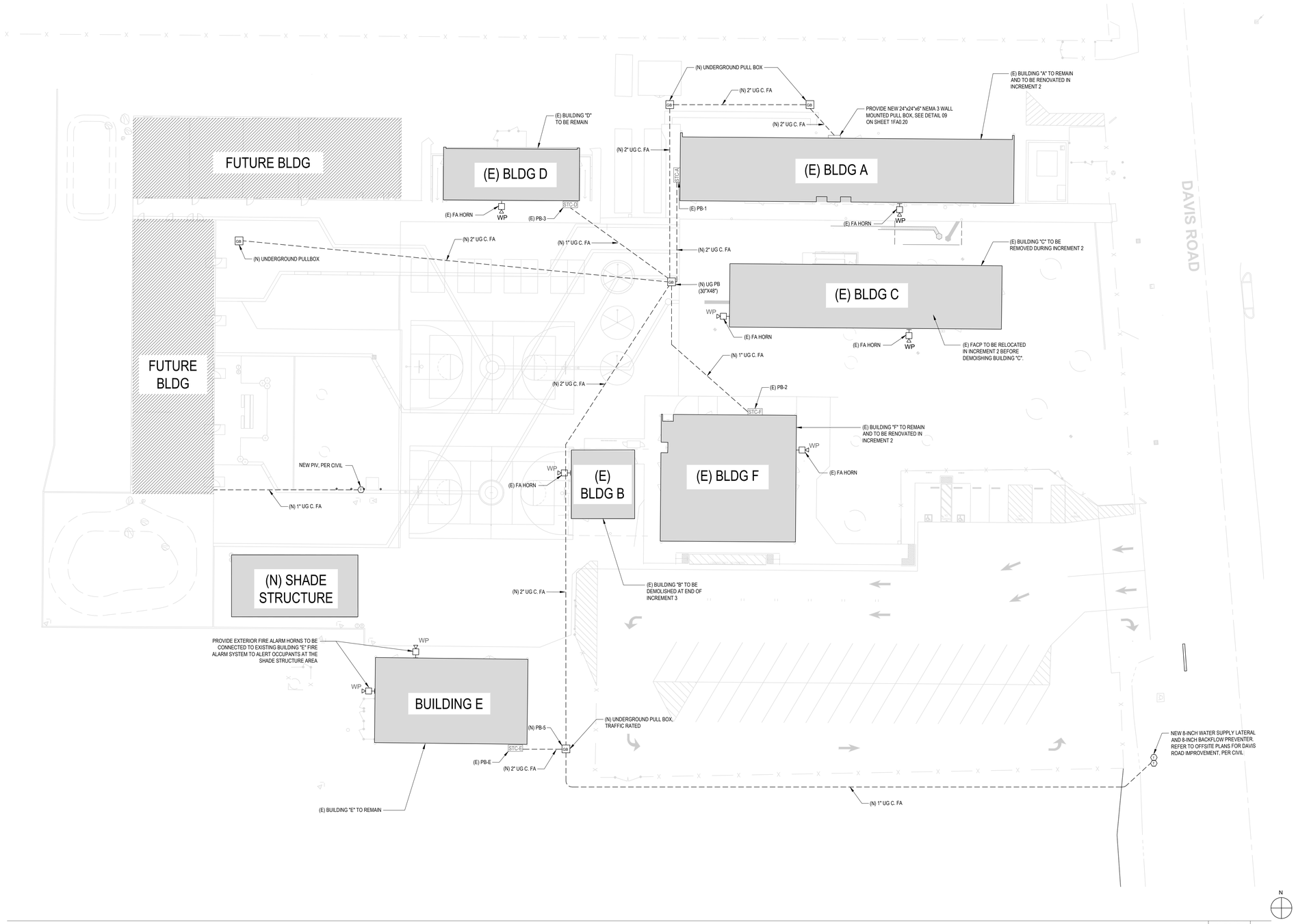

FIRE ALARM SITE PLAN | 1" = 20'-0" | 05

ANCHORAGE SCHEDULE - WALL MOUNTED ELECTRICAL EQUIPMENT							
EQUIPMENT	LOCATION (ROOM NO.)	WEIGHT (lbs)	HEIGHT (in)	WIDTH (in)	DEPTH (in)	SCREWS - SEE NOTES 1 & 2	
						QUANTITY OF SCREWS ROWS	QUANTITY OF SCREWS PER ROW
SUB-PANELS	VARIOUS	80	60	20	6	6	2
WALL MOUNTED PULLBOX	VARIOUS	60	24	24	6	2	2

NOTES:

1. USE #10 SMS SCREWS.
2. FASTENERS EXPOSED TO WEATHER SHALL BE STAINLESS STEEL OR HOT-DIPPED GALVANIZED.

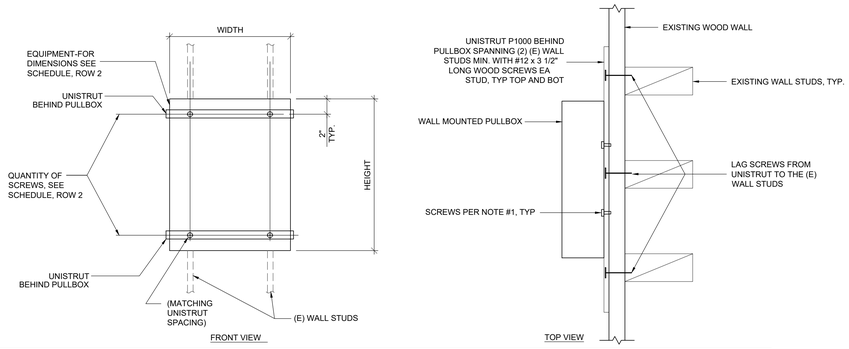

TYPICAL WALL MOUNTED EQUIPMENT SCHEDULE AND DETAIL | 09

GENERAL NOTES

1. DO NOT DEVIATE FROM CONDUIT RUNS AS SHOWN ON FLOOR PLANS WITHOUT PRIOR APPROVAL FROM SYSTEM SUPPLIER/ENGINEER. FACTORS SUCH AS EXCESSIVE VOLTAGE DROP, ADDITIONAL PARTS, ENGINEERING, ETC. THAT ARE A RESULT OF CONDUIT RUN DEVIATIONS SHALL BE THE SOLE RESPONSIBILITY OF THE CONTRACTOR.

2. FIRE ALARM EVACUATION SIGNAL SHALL BE CLEARLY HEARD AND COMPLY WITH 2022 NFPA 72 18.4.3.1.

3. ALL PENETRATIONS THROUGH FIRE RATED WALL SHALL BE PROTECTED FROM THE SPREAD OF FIRE WITH AN APPROVED FIRE STOP SYSTEM EQUAL TO OR GREATER THAN THE FIRE RATING OF THE STRUCTURE / SURFACE BEING PENETRATED.

4. A SYSTEM GROUND MUST BE PROVIDED FOR EARTH DETECTION AND LIGHTING PROTECTION DEVICES. THIS CONNECTION SHALL BE MADE TO AN APPROVED DEDICATED EARTH CONNECTION PER CEC, ARTICLE 250.

5. WIRING IN DUCTS, PLENUMS AND OTHER AIR HANDLING SPACES MUST BE INSTALLED IN ACCORDANCE WITH CEC 2022.

6. FITTINGS, BOXES, AND CONDUIT INSTALLED UNDERGROUND OR IN WET LOCATIONS MUST BE LISTED FOR USE IN WET LOCATIONS. UNDERGROUND CONDUITS REQUIRE WATERTIGHT FITTINGS AND MUST BE FREE OF WATER.

7. ALL FIRE ALARM SYSTEM CONDUCTORS SHALL BE RUN IN A DEDICATED FIRE ALARM CONDUIT SYSTEM.

IDENTIFICATION STAMP
DIV. OF THE STATE ARCHITECT
APP: 02-123848 INC: 01
REVIEWED FOR
SS ☑ FLS ☑ ACS ☑
DATE: 05/21/2026

LPA
ARCHITECTURE ENGINEERING INTERIOR DESIGN
LANDSCAPE ARCHITECTURE PLANNING
949-261-1001 Office
LPADesignStudios.com
5301 California Avenue, Suite 100
Irvine, California 92617

REGISTERED PROFESSIONAL ENGINEER
ALDO GERARDO ALVAREZ
E22855
3/31/28
ELECTRICAL
STATE OF CALIFORNIA

This document and all other project documents, ideas, aesthetics and designs incorporated therein are instruments of service. All project documents are copyright protected, are the property of LPA, Inc. (LPA) and cannot be lawfully used in whole or in part for any project or purpose except as set forth in the contractual agreement between LPA and its Client. The unauthorized disclosure and/or use of the project documents (including the creation of derivative works), may give rise to liability for copyright infringement, unlawful disclosure, use or misappropriation of property rights held by LPA. The unauthorized use of the project documents will give rise to the recovery of monetary losses and damages including attorney fees and costs for which the unauthorized user will be held liable.
Project documents describe the design intent of the work and are not a representation of as-built or existing conditions. LPA is not responsible for any discrepancies between the project documents and the existing conditions.

© LPA, Inc.

ELKHORN ELEMENTARY SCHOOL
CAMPUS MODERNIZATION INCREMENT 1

1505 DAVIS ROAD, STOCKTON, CA 95209

Developed for
LODI UNIFIED SCHOOL DISTRICT

Revision	Date

Submittal	Date
100% SCHEMATIC DESIGN	08/29/2025
DSA SUBMITTAL	12/18/2025

Job Number	31942
Checked By	MN
Scale	AS NOTED

FIRE ALARM SITE PLAN

1FA0.20

CONTRACTOR(S) GUIDELINES:

28. ALL SPLICES SHALL UTILIZE 3M 710 MODULES. ALL CABLES MUST BE EQUIPPED TO PROVIDE A CONTINUOUS BOUND OF CABLE SHIELDS THROUGH ALL SPLICES.

29. PULL ROPES SHALL BE PLACED IN ALL VACANT CONDUITS.

30. ALL WORK MUST BE COMPLETED IN A NEAT AND PROFESSIONAL MANNER. THE WORK SITE SHALL BE KEPT CLEAN AND ALL DAMAGE TO DISTRICT'S PROPERTY REPAIRED.

31. THE CONTRACTOR SHALL BE RESPONSIBLE FOR CONDUCTING A FINAL CLEANUP OF THE WORK SITE PRIOR TO FINAL SYSTEM ACCEPTANCE.

32. CONTRACTOR SHALL REMOVE ALL COPPER, FIBER AND COAXIAL CABLES ABANDONED IN CONDUIT, CEILINGS AND WALLS PER CEC. CABLE SHALL INCLUDE ALL INTRABUILDING, RISER SYSTEMS AND STATION CABLES FOR ALL LOW VOLTAGE/TECHNOLOGY/STRUCTURED CABLING SYSTEMS.

33. CONTRACTOR(S) SHALL VERIFY ALL SITE CONDITIONS PRIOR TO BID.

34. IN ACCESSIBLE CEILING SPACES;

a. THE CONTRACTOR SHALL PROVIDE THE REQUIRED STUB UP(S) / OUT(S) AND BOXES WITH MUD-RINGS TO THE NEAREST ACCESSIBLE CEILING SPACE AND / OR NEAREST TECHNOLOGY PATHWAY INFRASTRUCTURE, REFERENCE PLANS AND SPECIFICATION FOR MORE INFORMATION.

b. THE DESIGNATED SCS / TECHNOLOGY CONTRACTOR(S) SHALL PROVIDE A J-HOOK PATHWAY SYSTEM AND REQUIRED SLEEVES. DO NOT USE CEILING TILE WIRE HANGERS, WATER OR ELECTRICAL PIPES, OR LIGHT FIXTURES TO HANG CABLE. CABLE MUST BE A MINIMUM OF 8 INCHES ABOVE THE CEILING TILE AND MUST NOT COME WITHIN TWELVE INCHES OF A LIGHT FIXTURE.

- THE SCS / TECHNOLOGY CONTRACTOR WILL PROVIDE THE PATHWAY REQUIRED FOR THE STRUCTURE CABLING SYSTEMS.
- THE DESIGNATED LOW VOLTAGE / TECHNOLOGY CONTRACTOR(S) FOR EACH "SUB-SYSTEM WILL PROVIDE THE PATHWAY REQUIRED FOR THE SYSTEMS, OUTSIDE WHAT IS CONSIDERED THE STRUCTURED CABLING SYSTEM.

35. IN INACCESSIBLE AND HARDLID CEILING SPACES;

a. THE CONTRACTOR SHALL PROVIDE ALL CONDUIT PATHWAYS, BOXES ETC. FOR A COMPLETE SYSTEM FROM THE MDF ROOM, IDF ROOM(S), IDF CABINET(S), AND ALL OTHER LOW VOLTAGE / TECHNOLOGY SYSTEMS HEADEND, CABINETS, TERMINAL CABINETS, ETC. TO THE POINT OF TERMINATION AT THE STATION END LOCATION PER PLANS AND SPECIFICATION.

TECHNOLOGY ABBREVIATIONS:

ACP	ACCESS CONTROL PROCESSOR	MIC	MICROPHONE
AFF	ABOVE FINISHED FLOOR	MM	MULTIMODE
AHJ	AUTHORITY HAVING JURISDICTION	MPOE	MINIMUM POINT OF ENTRY
AMP	AMPLIFIER	(N)	NEW
AOR	ARCHITECT OF RECORD	NC	NORMALLY CLOSED
AUD	AUDIO	NIC	NOT IN CONTRACT
AUTO	AUTOMATIC	NO	NORMALLY OPEN
AUX	AUXILIARY	NTS	NOT TO SCALE
AV	AUDIOVISUAL	NVR	NETWORK VIDEO RECORDER
AV/c	AUDIOVISUAL CONTROLLER	OC	ON CENTER
AWG	AMERICAN WIRE GAUGE	OFCI	DISTRICT FURNISHED, CONTRACTOR INSTALLED
B	BLANK	OFOI	DISTRICT FURNISHED, DISTRICT INSTALLED
BCT	BONDING CONDUCTOR FOR TELECOMMUNICATIONS CONDUIT	OSP	OUTSIDE PLANT
C	CONDUIT	PB	PULL BOX
CATV	COMMUNITY ANTENNA TELEVISION	PIR	PASSIVE INFRARED
CFCI	CONTRACTOR FURNISHED, CONTRACTOR INSTALLED	POE	POWER OVER ETHERNET
CFOI	CONTRACTOR FURNISHED, DISTRICT INSTALLED	PR	PAIR OF CONDUCTORS
CL	CENTERLINE	PTZ	PAN TILT ZOOM
DIV	DIVISION	PVC	POLYVINYL CHLORIDE
DC	DOOR CONTACT	PWR	POWER
(E)	EXISTING	RCP	REFLECTED CEILING PLAN
EC	ELECTRICAL CONTRACTOR	REX	REQUEST TO EXIT
ECS	EMERGENCY COMMUNICATION SYSTEM	RFI	REQUEST FOR INFORMATION
EF	ENTRANCE FACILITY FOR TELECOMMUNICATION	RMC	RIGID METALLIC CONDUIT
EMT	ELECTRIC METALLIC TUBING	RR	REMOVAL AND RELOCATE
ER	EQUIPMENT ROOM	SM	SINGLE MODE
EXT	EXTERIOR	STR	STRANDS (OF FIBER)
(F)	FUTURE	STP	SHIELDED TWISTED PAIR
FACP	FIRE ALARM CONTROL PANEL	SEC	SECURITY
FATC	FIRE ALARM TERMINAL CABINET	TA	TEMPERATURE ALARM
FB	FLOORBOX	TBB	TELECOMMUNICATIONS BONDING BACKBONE
FO	FIBER OPTIC	TELCO	TELEPHONE COMPANY
GB	GROUND BOX	TGB	TELECOMMUNICATIONS GROUNDING BUSBAR (TGB)
GC	GENERAL CONTRACTOR	TMGB	TELECOMMUNICATIONS MAIN GROUNDING BUSBAR
IC	INTERCOM	TYP	UNLESS OTHERWISE NOTED
IDF	INTERMEDIATE DISTRIBUTION FRAME	UON	UNINTERRUPTIBLE POWER
ICP	INTRUSION CONTROL PROCESSOR	UPS	
INT	INTERIOR	UTP	UNSHIELDED TWISTED PAIR
IP	INTERNET PROTOCOL	V	VOICE
IT	INFORMATION TECHNOLOGY	VSS	
JB	JUNCTION BOX	WB	WALL BOX
MDF	MAIN DISTRIBUTION FRAME	WP	WEATHERPROOF
LCP	LIGHTING CONTROL PANEL		

EQUIPMENT ANCHORAGE NOTES:

APPLICABLE CODE: 2022 CBC

MEP COMPONENT ANCHORAGE NOTE

ALL MECHANICAL, PLUMBING, AND ELECTRICAL COMPONENTS SHALL BE ANCHORED AND INSTALLED PER THE DETAILS ON THE DSA-APPROVED CONSTRUCTION DOCUMENTS. THE FOLLOWING COMPONENTS SHALL BE ANCHORED OR BRACED TO MEET THE FORCE AND DISPLACEMENT REQUIREMENTS PRESCRIBED IN THE 2022 CBC SECTIONS 1617A.1.18 THROUGH 1617A.1.26 AND ASCE 7-16 CHAPTERS 13, 26 AND 30.

1. ALL PERMANENT EQUIPMENT AND COMPONENTS.
2. TEMPORARY, MOVABLE OR MOBILE EQUIPMENT THAT IS PERMANENTLY ATTACHED (E.G. HARD WIRED) TO THE BUILDING UTILITY SERVICES SUCH AS ELECTRICITY, GAS OR WATER. "PERMANENTLY ATTACHED" SHALL INCLUDE ALL ELECTRICAL CONNECTIONS EXCEPT PLUGS FOR 110/220 VOLT RECEPTACLES HAVING A FLEXIBLE CABLE
3. TEMPORARY, MOVABLE OR MOBILE EQUIPMENT WHICH IS HEAVIER THAN 400 POUNDS OR HAS A CENTER OF MASS LOCATED 4 FEET OR MORE ABOVE THE ADJACENT FLOOR OR ROOF LEVEL THAT DIRECTLY SUPPORT THE COMPONENT IS REQUIRED TO BE RESTRAINED IN A MANNER APPROVED BY DSA.

THE FOLLOWING MECHANICAL AND ELECTRICAL COMPONENTS SHALL BE POSITIVELY ATTACHED TO THE STRUCTURE BUT NEED NOT DEMONSTRATE DESIGN COMPLIANCE WITH THE REFERENCES NOTED ABOVE. THESE COMPONENTS SHALL HAVE FLEXIBLE CONNECTIONS PROVIDED BETWEEN THE COMPONENT AND ASSOCIATED DUCTWORK, PIPING, AND CONDUIT. FLEXIBLE CONNECTIONS MUST ALLOW MOVEMENT IN BOTH TRANSVERSE AND LONGITUDINAL DIRECTIONS:

A. COMPONENTS WEIGHING LESS THAN 400 POUNDS AND HAVE A CENTER OF MASS LOCATED 4 FEET OR LESS ABOVE THE ADJACENT FLOOR OR ROOF LEVEL THAT DIRECTLY SUPPORT THE COMPONENT.
B. COMPONENTS WEIGHING LESS THAN 20 POUNDS, OR IN THE CASE OF DISTRIBUTED SYSTEMS, LESS THAN 5 POUNDS PER FOOT, WHICH ARE SUSPENDED FROM A ROOF OR FLOOR OR HUNG FROM A WALL.

THE ANCHORAGE OF ALL MECHANICAL, ELECTRICAL AND PLUMBING COMPONENTS SHALL BE SUBJECT TO THE APPROVAL OF THE DESIGN PROFESSIONAL IN GENERAL RESPONSIBLE CHARGE OR STRUCTURAL ENGINEER DELEGATED RESPONSIBILITY AND ACCEPTANCE BY DSA. THE PROJECT INSPECTOR WILL VERIFY THAT ALL COMPONENTS AND EQUIPMENT HAVE BEEN ANCHORED IN ACCORDANCE WITH ABOVE REQUIREMENTS.

PIPING, AND DUCTWORK DISTRIBUTION SYSTEM BRACING NOTES:

APPLICABLE CODE: 2022 CBC PER IR 16-13.

MEP DRISTRIBUTION SYSTEM BRACING NOTE FOR PIPING, DUCTWORK, AND ELECTRICAL DISTRIBUTION SYSTEM BRACING NOTE

PIPING, DUCTWORK, AND ELECTRICAL DISTRIBUTION SYSTEMS SHALL BE BRACED TO COMPLY WITH THE FORCES AND DISPLACEMENTS PRESCRIBED IN ASCE 7 SECTION 13.3 AS DEFINED IN ASCE 7 SECTIONS 13.6.5, 13.6.6, 13.6.7, 13.6.8; AND 2022 CBC SECTIONS 1617A.1.24, 1617A.1.25 AND 1617A.1.26.

THE METHOD OF SHOWING BRACING AND ATTACHMENTS TO THE STRUCTURE FOR THE IDENTIFIED DISTRIBUTION SYSTEM ARE AS NOTED BELOW. THE MEP DESIGN PROFESSIONAL ENGINEER RESPONSIBLE FOR CONTENT ON THESE SHEETS HAS VERIFIED THAT THE DESIGN METHODS IDENTIFIED BELOW ARE IN ACCORDANCE WITH DSA IR 16-13.

MECHANICAL PIPING (MP), MECHANICAL DUCTS (MD), PLUMBING PIPING (PP), ELECTRICAL DISTRIBUTION SYSTEMS (E):

MP MD PP E
☐ ☐ ☐ ■ OPTION 1: PROJECT-SPECIFIC DESIGN.

MP MD PP E
☐ ☐ ☐ ☐ OPTION 2: DESIGN BASED ON OSHPD, WITHIN PROJECT SUBMITTAL.

MP MD PP E
☐ ☐ ☐ ☐ OPTION 3: DESIGN BASED ON OSHPD, DEFERRED SUBMITTAL.

TECHNOLOGY PENETRATION NOTES:

1. UNLESS SPECIFICALLY SHOWN ON THE DRAWINGS, THE CONTRACTOR SHALL MAKE NO PENETRATION OF FLOORS, WALLS OR CEILING WITHOUT THE PRIOR WRITTEN APPROVAL OF THE DISTRICTS REPRESENTATIVE.

2. WALL PENETRATIONS:

a. THE SCS AND/OR LV CONTRACTOR SHALL PROVIDE FIRE STOPPING FOR ALL COMMUNICATIONS RATED (AND IN SOME CASES NON-RATED, THAT WILL BE DESCRIBED BELOW THIS SECTION) PATHWAYS AND SPACES. THESE FIRE STOPPING DEVICES SHALL CONFORM TO (BUT NOT LIMITED TO) UL 1479, ASTM E814, BICSI TDMM, FIRE STOPPING ANSI/TIA-568-C, STANDARD FOR INSTALLING COMMERCIAL BUILDING TELECOMMUNICATIONS CABLING, SECTION 5, CLAUSE 5.1 THROUGH 5.2.3, MANUFACTURES GUIDELINES OR OTHER PREVAILING CODE AND MUST BE AN APPROVED UL LISTED SYSTEM.

b. CABLE TRAY FIRE-STOPPING SHALL UTILIZE THE MULTI GANG FIRE-STOPPING SYSTEM THAT WILL BE ABLE TO STACK THE UNITS HORIZONTALLY AND/OR VERTICALLY IF REQUIRED DUE TO CURRENT AND/OR FUTURE CABLING DESIGNS.

c. THE CONTRACTOR SHALL INSTALL PENETRATION FIRE-STOP SEAL MATERIALS IN ACCORDANCE WITH DESIGN REQUIREMENTS, AND MANUFACTURER'S INSTRUCTIONS.

d. THE CONTRACTOR'S INSTALLER SHALL BE CERTIFIED, LICENSED OR OTHERWISE QUALIFIED BY THE FIRE-STOPPING MANUFACTURER AS HAVING BEEN PROVIDED THE NECESSARY TRAINING TO INSTALL MANUFACTURER'S PRODUCTS PER SPECIFIED REQUIREMENTS.

e. ALL THROUGH-PENETRATION SHALL BE A MANUFACTURED, UL CLASSIFIED, FIRE-STOP DEVICE / SYSTEM DESIGNED TO ALLOW CABLES TO PENETRATE FIRE-RATED WALLS WITH A BUILT-IN FIRE SEALING SYSTEM THAT AUTOMATICALLY ADJUSTS TO THE AMOUNT OF CABLES INSTALLED. THE FIRE-STOPPING DEVICE SHALL BE CAPABLE OF INSTALLATION IN NEW CONSTRUCTION OR RETROFIT IN EXISTING STRUCTURES.

f. THE CONTRACTOR MUST NOT USE CONCRETE OR OTHER NON-REMOVABLE SUBSTANCE FOR FIRE STOPPING ON CABLE TRAYS, WIREWAYS OR CONDUITS. CONTRACTORS WHO USE THIS METHOD WILL BE REQUIRED TO REPLACE ALL CABLES AFFECTED AND PROVIDE THE ORIGINAL SPECIFIED ACCESS TO EACH EFFECTED AREA. THIS REQUIREMENT ALSO APPLIES TO MAINTAINING FIRE RATINGS OF ALL FLOORS PENETRATED BY CONDUITS OR DEVICES DESIGNATED FOR USE BY VOICE AND DATA CABLING.

g. ANY PENETRATIONS THROUGH FIRE-RATED WALLS FOR CABLE PATHWAYS / CABLES SHALL BE SEALED BY USE OF A NON-PERMANENT FIRE BLANKET OR OTHER METHOD IN COMPLIANCE. THE CONTRACTOR MUST USE FIRE STOPPING ON CABLE TRAYS, WIREWAYS AND CONDUITS BETWEEN VERTICAL OR HORIZONTAL, FOUR DIFFERENT METHODS OF FIRE-STOPPING HAVE BEEN IDENTIFIED FOR THE HORIZONTAL THROUGH PENETRATIONS BETWEEN WALLS, RATED, RATED WITH ACOUSTIC PROPERTIES, NON-RATED, AND NON-RATED WITH ACOUSTIC PROPERTIES.

BELOW ARE METHODS TO ACCOMPLISH THESE DIFFERENT TYPES:

- SEALING OF RATED OPENINGS BETWEEN FLOORS OR THROUGH RATED WALLS, WHETHER EXISTING OR CREATED BY THE CONTRACTOR FOR PLACEMENT OF CABLE SHALL BE THE RESPONSIBILITY OF THE CONTRACTOR. SEALING MATERIAL AND APPLICATION SHALL BE AN APPROVED UL LISTED SYSTEM AND SHALL BE ACCOMPLISHED IN SUCH A MANNER THAT IS ACCEPTABLE TO THE LOCAL FIRE AND BUILDING AUTHORITIES HAVING JURISDICTION OVER THIS WORK. CREATION OF SUCH OPENINGS AS ARE NECESSARY FOR CABLE PASSAGE BETWEEN LOCATIONS AS SHOWN ON THE DRAWINGS SHALL BE THE RESPONSIBILITY OF THE CONTRACTOR. ANY OPENINGS CREATED BY OR FOR THE CONTRACTOR AND LEFT UNUSED SHALL ALSO BE SEALED AS PART OF THIS WORK.
- RATED WALLS WITH THROUGH PENETRATIONS WITH ACOUSTIC PROPERTIES SHALL BE INSTALLED WITH FACTORY MANUFACTURED DEVICE. SUCH AS A STI "EZ PATH" OR WIREMOLD "FLAMESTOPPER" OR EQUAL. THE TYPICAL STC RATING IS TO BE EQUAL TO OR GREATER THAN THE WALL PENETRATED, (AVG IS A RATING OF 44 STC PER UBC RATINGS).
- NON-RATED PATHWAY, ALTHOUGH NOT REQUIRED TO BE FIRE-STOPPED, SHALL BE A MANUFACTURED DEVICE THAT WILL ALLOW FIRE-STOPPING TO BE INSTALLED IN THE FUTURE IF REQUIRED, (I.E. WIREMOLD "FLAMESTOPPER" OR EQUAL).
- A NON-RATED PATHWAY WITH ACOUSTIC PROPERTIES CAN BE FOUND IN AREAS SUCH AS, CONFERENCE ROOMS, HUMAN RESOURCE OFFICES, MEDICAL EXAMINATION ROOMS ETC. THESE ROOMS REQUIRE TO LIMIT THE AMOUNT OF AMBIENT NOISE THAT CAN TRAVEL FROM ONE ROOM TO THE OTHER THROUGH THE CABLE PATHWAY. IF THIS WALL IS PENETRATED, INSTALL A SYSTEM THAT WILL RE-ESTABLISH THE STC RATING OF THE WALL. THE TYPICAL STC RATING IS AN AVERAGE OF 44 STC PER UBC RATINGS.

CONTRACTOR(S) GUIDELINES:

1. ALL TECHNOLOGY WORK SHALL COMPLY WITH DESIGN GUIDELINES AS WELL AS APPLICABLE FEDERAL, STATE, AND LOCAL CODES. WHERE THE CONSTRUCTION DOCUMENTS INDICATE MORE RESTRICTIVE REQUIREMENTS, THE DOCUMENTS SHALL GOVERN BUT THE CONSTRUCTION DOCUMENTS SHALL NOT BE INTERPRETED AS AUTHORITY TO VIOLATE ANY CODE OR REGULATION.

2. IN THE EVENT OF A CONFLICT OR INCONSISTENCY BETWEEN ITEMS INDICATED ON THE PLANS AND/OR SPECIFICATIONS OR WITH CODE REQUIREMENTS, THE NOTE, CODE OR SPECIFICATION WHICH PRESCRIBES AND ESTABLISHES THE MORE COMPLETE JOB OR THE HIGHER STANDARD SHALL PREVAIL.

3. OMISSIONS FROM THE DRAWINGS, SPECIFICATIONS OR THE MIS-DESCRIPTION OF DETAILS FROM WORK WHICH ARE CLEAR AND NECESSARY TO CARRY OUT THE INTENT OF THE DRAWINGS, SPECIFICATIONS, OR WHICH ARE CUSTOMARILY PERFORMED, SHALL NOT RELIEVE THE CONTRACTOR FROM PERFORMING SUCH OMITTED OR MIS-DESCRIBED DETAILS OF THE WORK BUT THEY SHALL BE PERFORMED AS IF FULLY AND CORRECTLY SET FORTH AND DESCRIBED IN THE DRAWINGS AND SPECIFICATIONS.

4. THE CONTRACTOR SHALL CHECK ALL DRAWINGS FURNISHED, IMMEDIATELY UPON THEIR RECEIPT AND SHALL PROMPTLY NOTIFY THE DISTRICT OF ANY DISCREPANCIES.

5. ALL MATERIALS AND EQUIPMENT SHALL BE NEW AND SHALL BEAR THE UNDERWRITERS LABEL (UL) AND SHALL BE INSTALLED IN THE MANNER FOR WHICH THEY ARE DESIGNED AND APPROVED.

6. THE CONTRACTOR SHALL NOT BORE, NOTCH OR IN ANY WAY CUT INTO ANY STRUCTURAL MEMBER WITHOUT WRITTEN APPROVAL FROM THE ARCHITECT OR STRUCTURAL ENGINEER.

7. ALL CHANGES TO STRUCTURES (BUILDING, DRILLING, CORING, ETC.) NOT SHOWN ON THE DRAWINGS SHALL BE APPROVED IN WRITING BY STRUCTURAL ENGINEER.

8. FOR PURPOSES OF CLEARNESS AND LEGIBILITY, THE TELECOM DRAWINGS ARE ESSENTIALLY DIAGRAMMATIC. THE SIZE AND LOCATION OF EQUIPMENT IS SHOWN TO SCALE WHEREVER POSSIBLE. THE CONTRACTOR SHALL VERIFY ALL CONDITIONS, DATA INFORMATION AS INDICATED ON THE DRAWINGS AND IN THE SPECIFICATION SECTIONS WHERE SCS AND LOW VOLTAGE WORK INTERFACES WITH OTHER TRADES.

9. THE CONTRACTOR SHALL MAINTAIN AS-BUILT DRAWINGS TO REFLECT ALL CHANGES MADE DURING CONSTRUCTION AND ANY DEVIATIONS FROM THE ELECTRICAL AND TECHNOLOGY DRAWINGS. THIS INCLUDES DEVIATIONS FROM OUTLET NUMBERS AND ANY ADDITION, DELETION OR RELOCATION OF OUTLETS SHOWN ON WORKING DRAWINGS, PATHWAY ADDITIONS, DELETIONS OR RELOCATIONS. THE CONTRACTOR SHALL AFTER COMPLETION OF JOB, PROVIDE THE DISTRICT AN ELECTRONIC AND HARD COPY OF AS-BUILT WORK.

10. ANY DEVIATIONS FROM PLANS OR SPECS MUST BE APPROVED IN WRITING BY THE DISTRICT'S REPRESENTATIVE.

11. ALL FOOTAGES ON DRAWINGS ARE ESTIMATED AND MUST BE VERIFIED BY CONTRACTOR PRIOR TO ORDERING MATERIAL.

12. ALL STATION CABLES SHALL BE NEATLY DRESSED AND SECURED EVERY FIVE FEET AT A MINIMUM.

13. THE CONTRACTOR SHALL BE RESPONSIBLE FOR REMOVAL AND REPLACEMENT OF CEILING TILE INCLUDING REPLACEMENT OF BROKEN OR DAMAGED TILES.

14. ALL LOCATIONS PASSING THROUGH A FIRE OR A SMOKE BARRIER MUST BE FIRE STOPPED USING APPROVED (UL CLASSIFIED) FIRE STOP SYSTEM, INSTALLED PER THE MANUFACTURER'S INSTRUCTIONS AND PROPERLY LABELED.

15. CONDUIT SHALL BE FILLED TO MAXIMUM CAPACITY (PER CODE, STANDARDS, AND NORMS) BEFORE UTILIZING ANOTHER VACANT CONDUIT.

16. ALL STATION OUTLETS AND TERMINALS SHALL BE PROPERLY IDENTIFIED USING THE DISTRICT'S STANDARD INTERNAL DISTRIBUTION NUMBERING SCHEME. ALL LABELS SHALL BE PREPRINTED OR TYPED.

17. EACH BACKBONE RISER AND/OR OSP CABLE SHALL BE EQUIPPED WITH A PERMANENT LABEL INDICATING CABLE TYPE, PAIR OR OPTIC COUNTS, DISTANT ENDS, AND CABLE LENGTH. BOTH ENDS OF EACH CABLE AND AT EVERY MAINTENANCE HOLE, HAND HOLE, AND PULL BOX, SHALL BE SO LABELED.

18. FIBER BACKBONE CABLE SHALL BE PLACED WITH 6 FOOT MAINTENANCE LOOP AT BOTH ENDS OF THE RUN. THE MAINTENANCE LOOP SHALL BE SECURED IN SUCH A MANNER TO PROVIDE PROTECTION DURING SUBSEQUENT CABLE PULLS.

19. ALL STATION CABLES/OUTLETS SHALL BE TESTED AND DOCUMENTED USING A PAIR SCANNER SPECIFICALLY DESIGNED TO TEST THE TYPE OF CABLE INSTALLED (E.G. CATEGORY 6A). TEST RESULTS SHALL BE ONE PAGE PER AND NOTED WITH THE STATION/JACK NUMBERING SCHEME THAT IS STANDARDIZED FOR THE DISTRICT.

20. ALL FIBER OPTIC STATION AND RISER CABLE SHALL BE TESTED END-TO-END AND THE RESULTS (LOSS IN dB) NOTED ON A SEPARATE TYPED SHEET.

21. AFTER STATION CABLE IS TESTED AND DOCUMENTED, ONE PAIR FROM EACH VOICE STATION SHALL BE CROSS CONNECTED THROUGH EACH CLOSET BACK TO THE MAIN DISTRIBUTION FRAME. TELEPHONE NUMBER ASSIGNMENTS FOR EACH JACK MUST BE APPROVED BY THE TELECOM STAFF PRIOR TO IMPLEMENTATION. A WRITTEN RECORD OF ALL CROSS CONNECT ASSIGNMENTS WILL BE PROVIDED TO THE DISTRICT BY THE SCS CONTRACTOR.

22. FIBER CABLES SHALL BE SPLICED TOGETHER USING A FUSION SPLICE AND PLACED IN A FIBER SPLICE CASE THAT IS RE-ENTERABLE, FULLY DRESSED AND ENCLOSED TO FIT THE NUMBER AND TYPE OF CABLES TERMINATED.

23. CABLE TRAY SHALL BE PLACED IN MDF AND IDF(S) AS SHOWN ON DRAWINGS AND AS REQUIRED TO PROPERLY SECURE CABLES AND WIRE.

24. A BACKBONE CABLE ASSIGNMENT RECORD SHEET SHALL BE PREPARED (TYPED) PRIOR TO START OF ACCEPTANCE TESTING. ALL FLOOR PLANS SHALL BE NEATLY HAND NOTED WITH STATION JACK NUMBER AND CABLE LENGTH.

25. ALL CABLES SHALL BE CLEARLY LABELED WITH CABLE NUMBERS, PAIR ASSIGNMENTS AND DESIGNATION.

26. ALL CABLE TRAYS, LADDER RACKS, CONDUITS, EQUIPMENT RACKS, PROTECTOR PANELS, AND CABLE SHEATHS SHALL BE BONDED & GROUNDED TO EQUIPMENT GROUND WITH #6 WIRE (MIN.).

27. ALL SPLICES SHALL BE CONTAINED WITHIN AN APPROVED SPLICE CASE DESIGNED FOR MULTIPLE CLOSURE.

TECHNOLOGY CABLING NOTES:

1. THE USE OF LUBRICANTS SUCH AS CLEAR GLIDE, TO FACILITATE THE INSTALLATION OF CABLES IN CONDUITS IS ENCOURAGED FOR FRICTION REDUCTION AND TO MAINTAIN THE REQUIRED PULL TENSION. YELLOW 77 AND POLYWATER "F" IS PERMISSIBLE FOR USE AS A LUBRICANT FOR ISP TECHNOLOGY CABLING. THE USE OF OSP, LOW TEMPERATURE CABLE LUBRICANTS SHALL NOT BE ACCEPTABLE IN AN INDOOR PLENUM ENVIRONMENT. UNDER NO CIRCUMSTANCES SHALL CABLE PULLING LUBRICANT BE ALLOWED TO ACCUMULATE ON WALLS, FLOORS, BACKBOARDS, OR OTHER SURFACES OUTSIDE THE CONDUIT.

2. ANY CABLE DAMAGED OR EXCEEDING RECOMMENDED INSTALLATION PARAMETERS DURING INSTALLATION SHALL BE REPLACED BY THE CONTRACTOR BEFORE FINAL ACCEPTANCE AT NO COST TO THE DISTRICT.

3. EACH RUN OF CABLE BETWEEN THE TERMINATION BLOCK OR PATCH PANEL AND THE STATION CONNECTOR SHALL BE CONTINUOUS WITHOUT ANY JOINTS OR SPLICES.

4. ALL STATION CABLE SHALL BE PLACED IN THE INTERIOR OF WALLS UNLESS OTHERWISE NOTED OR OBSTRUCTED.

5. PROVIDE BUSHINGS, GROMMETS AND STRAIN-RELIEF FOR CABLES TERMINATING AT WALL-MOUNTED OUTLETS AND PATCH PANELS TO ENSURE DURABLE AND ROBUST CONNECTIONS. THE BUSHINGS AND GROMMETS ARE INTENDED TO PROTECT THE CABLES FROM ANY SHARP EDGES THAT PRESENT A RISK TO THE CABLES. ENSURE THAT ALL SHARP EDGES ARE COVERED TO PROTECT THE CABLES FROM DAMAGE.

6. ALL CABLE BUNDLES EXITING FLOOR OR WALL PENETRATIONS AND RUNNING INTO FURNITURE OR CASEWORK SHALL BE WRAPPED IN SPIRAL WRAP OR SPLIT-LOOM TUBING TO PROTECT THE CABLING AND PROVIDE A NEAT INSTALLATION.

7. ALL CABLE OR INNERDUCT SHALL RUN PARALLEL OR AT RIGHT ANGLES TO BUILDING WALL STRUCTURES.

8. IN SUSPENDED CEILING AND RAISED FLOOR AREAS WHERE DUCT, CABLE TRAYS OR CONDUIT ARE NOT AVAILABLE, CABLE BUNDLES SHALL BE SUPPORTED VIA "J" HOOKS ATTACHED TO THE BUILDING STRUCTURE AND FRAMEWORK AT A MAXIMUM OF FIVE (5) FOOT INTERVALS. MINIMUM 1 " WIDE J-HOOKS SHALL BE APPROPRIATELY SIZED TO ALLOW A MINIMUM OF 60% SPARE CAPACITY FOR FUTURE CABLE INSTALLATION. THE CONTRACTOR SHALL INCLUDE ALL COSTS IN BASE BID FOR ANY ADDITIONAL SUPPORTS/SEISMIC BRACING REQUIRED BY THE LOCAL AUTHORITY HAVING JURISDICTION.

9. THE CONTRACTOR SHALL BUNDLE, IN BUNDLES OF 48 OR LESS, STATION OR OTHER CABLING WITH 3/4" HOOK AND LOOP "VELCRO" STRIPS TIGHT ENOUGH TO HOLD THE BUNDLE TOGETHER IN A CYLINDRICAL SHAPE, BUT NOT SO TIGHT AS TO DEFORM THE CABLE GEOMETRY. IT SHALL BE POSSIBLE TO COMPLETELY ROTATE ALL HOOK AND LOOP TIES AROUND ALL CABLE BUNDLES. PLENUM RATED HOOK AND LOOP TIES WILL BE USED IN ALL PLENUM AREAS.

10. CABLES OR J-HOOKS SHALL NOT BE ATTACHED TO LIFT OUT CEILING GRID SUPPORTS OR LAID DIRECTLY ON THE CEILING GRID.

11. CABLES OR J-HOOKS SHALL NOT BE ATTACHED TO OR SUPPORTED BY FIRE SPRINKLER HEADS OR DELIVERY SYSTEMS OR ANY ENVIRONMENTAL SENSOR LOCATED IN THE CEILING AIR SPACE.

12. WHERE ADDITIONAL CONDUIT(S)/SLEEVE(S) ARE REQUIRED, BUT NOT PROVIDED BY THE CONTRACTOR, THE SCS AND/OR LV CONTRACTOR SHALL BE RESPONSIBLE TO PROVIDE SUCH CONDUIT(S)/SLEEVE(S). CONNECT(S) AND SLEEVE(S) SHALL BE OF SUITABLE MATERIAL, SIZED, INSTALLED, FIRE-STOPPED, AND GROUNDED AS REQUIRED BY THE CEC, ANSI/TIA-569-D STANDARD AND ALL OTHER APPLICABLE CODES AND STANDARDS. SLEEVES SHALL CONSIST OF METALLIC CONDUIT DE-BURRED AND GROMMETED ON BOTH ENDS WITH FLANGES OR OTHER MEANS TO PREVENT THE SLEEVE FROM SLIPPING OR FALLING OUT OF THE PARTITION. SLEEVES SHALL EXTEND A MINIMUM OF 6" ON BOTH SIDES OF THE PARTITION. OUTSIDE PERIMETER OF SLEEVES SHALL BE SEALED AGAINST SOUND, AIR, WATER, HEAT, OR AS REQUIRED BY PARTITION DESIGN. INSIDE OF SLEEVE SHALL BE SEALED SIMILARLY AFTER INSTALLATION OF ALL CABLING. CABLES SHALL BE INDEPENDENTLY SUPPORTED ON EITHER SIDE OF THE SLEEVE. SLEEVES SHALL NOT PRESENT A SHARP EDGE AS CABLES PASS THROUGH AND SLEEVE(S) ADDED BY THE SCS CONTRACTOR SHALL BE APPROVED BY THE DISTRICTS REPRESENTATIVE PRIOR TO ROUGH-IN.

13. IN THE EVENT CONTRACTOR IS REQUIRED TO REMOVE CEILING TILES, SUCH WORK SHALL NOT BREAK OR DISTURB DURING REMOVAL OF THE CEILING GRID. THE DISTRICTS REPRESENTATIVE PRIOR TO ROUGH-IN. ALL INSULATION SHALL BE REPLACED IN ITS ORIGINAL LOCATION.

14. THE NUMBER OF CABLES IN EACH CONDUIT SHALL BE CONTROLLED TO ALLOW FOR FUTURE CABLE ADDITIONS AND TO STAY WITHIN THE MANUFACTURER'S MAXIMUM ALLOWABLE CABLE PULLING TENSION. CONDUIT FILL RATIOS SHALL NOT EXCEED THE CURRENT REQUIREMENTS OF THE CEC, ANSI/TIA-569-D, REFERENCE SECTION B.2, TABLES 1 AND 2 OF THIS DOCUMENT FOR ADDITIONAL REQUIREMENTS.

15. CONDUITS:
- ALL BACKBONE CABLING WILL RUN THROUGH DEDICATED CONDUITS.
- ALL NEW CONDUITS WILL BE SUPPLIED WITH A PULL STRING BY THE CONTRACTOR.
- EXISTING CONDUITS SHALL BE PROVEN TO BE CLEAR BY THE SCS AND/OR LV CONTRACTOR PRIOR TO PULLING OF CABLES.
- SCS AND/OR LV CONTRACTOR SHALL SUPPLY PULL STRING AND PULL ROPE FOR THE INSTALLATION OF ALL CABLES IN EXISTING CONDUITS.
- FOR ALL CONDUITS LEFT WITH AVAILABLE CAPACITY, SCS AND/OR LV CONTRACTOR SHALL REPLACE PULL STRINGS DURING THE COURSE OF HIS WORK.
- SCS AND/OR LV CONTRACTOR MUST SEAL ALL CONDUITS WITH AN APPROVED SEALING COMPOUND.

TECHNOLOGY GROUNDING SYSTEM NOTES:

1. THE CONTRACTOR SHALL PROVIDE A TELECOMMUNICATION GROUNDING BUSBAR (TGB) AND TELECOMMUNICATION BONDING BACKBONE (TBB) CABLE(S) AT EACH MDF ROOM AND IDF LOCATION. TERMINATE THE TBB ON GROUND BARS LOCATED AT EACH MDF ROOM AND IDF CABINET FROM BUILDING STEEL OR MAIN ELECTRICAL GROUND, OR AS OTHERWISE INDICATED ON THE DRAWINGS.

2. THE SCS CONTRACTOR SHALL UTILIZE A TELECOMMUNICATIONS BONDING BACKBONE (TBB) AS INDICATED IN THE DRAWINGS. GROUNDING MUST BE IN ACCORDANCE WITH THE CEC, ANSI/TIA-607-B AND ALL LOCAL CODES AND PRACTICES.

3. THE SCS CONTRACTOR SHALL BE RESPONSIBLE FOR BONDING ALL METALLIC SHEATH COMMUNICATIONS CABLES ENTERING THE BUILDING PER MANUFACTURER SPECIFICATIONS AND CEC 770-33, 800-33 AND 800-40. ALL GROUNDS SHALL CONSIST OF # 6-AWG COPPER WIRE AND SHALL BE SUPPLIED FROM AN APPROVED BUILDING GROUND AND BONDED TO THE MAIN ELECTRICAL GROUND. ALL CABLE SHEATHS AND SPLICE CASES SHALL BE GROUNDED TO A TELECOMMUNICATIONS GROUND BUS.

4. THE SCS CONTRACTOR SHALL PROVIDE GROUNDING AND BONDING FROM ALL HORIZONTAL EQUIPMENT INCLUDING DISTRIBUTION AND CROSS CONNECT FRAMES, PATCH PANELS, CABLE TRAYS, EQUIPMENT RACKS, LADDER TRAYS, CONDUITS, ACTIVE TELECOMMUNICAT

TECHNOLOGY SYMBOL LEGEND:

ALL NOTES ARE TYPICAL UNLESS NOTED OTHERWISE ON PLANS AND DETAILS

ROW#	SYMBOL	DESCRIPTION	BACK BOX	PLASTER RING	MOUNTING HEIGHT	CONDUIT	CABLING RESPONSIBILITY			CABLE MFR.	CABLE PRODUCT NUMBER	DEVICE RESPONSIBILITY			DEVICE MFR.	DEVICE PRODUCT NUMBER	DEVICE ACCESSORY		MAX. LOAD	INSTALLATION NOTES
							CFCI	OFCI	OFOI			CFCI	OFCI	OFOI						
1	MDF	MAIN DISTRIBUTION FRAME (MDF)	N/A	N/A	N/A	N/A	✓			N/A	N/A	✓			REFERENCE INCREMENT 2		N/A	N/A	N/A	
2	IDF	INTERMEDIATE DISTRIBUTION FRAME (IDF)	N/A	N/A	N/A	N/A	✓			N/A	N/A	✓			REFERENCE INCREMENT 2		N/A	N/A	500 LBS.	
3		GROUND BOX	N/A	N/A	N/A	N/A	✓			N/A	N/A	✓			CHRISTY	B1730/B3048 - TRAFFIC RATED N36 - NON TRAFFIC RATED	N/A	N/A	N/A	17 1T8.01, 19 1T8.01, 21 1T8.01
4		PULL BOX INTERIOR: NEMA1, EXTERIOR: NEMA3	N/A	N/A	EXISTING	N/A	✓			N/A	N/A	✓			EXISTING	EXISTING	N/A	N/A	N/A	
5		UNDERGROUND CONDUIT	N/A	N/A	N/A	2" 4"	✓			PANDUIT	CAT6A (BLUE): PUP6XHD04BU-G JACK (WHITE): CJ6X88TGIW-C	✓			CANTEX	SCHEDULE 40	N/A	N/A	N/A	1 1T8.01, 9 1T8.01, 10 1T8.01, 11 1T8.01

NOTES:

1. REFERENCE AUDIO VISUAL SPECIFICATIONS AND MANUFACTURER GUIDELINES WHEN DETERMINING BACK BOX SIZE FOR AUDIOVISUAL EQUIPMENT IF NOT SPECIFIED ABOVE.
2. USE EXTENSION RINGS, DEPTH AS REQUIRED, ON ALL BACK BOX LOCATIONS.
3. REFERENCE ANSI / EIA / TIA STANDARDS AS APPLICABLE.
4. ROUTE CONDUIT IN-WALL TO NEAREST TO ACCESSIBLE CEILING SPACE. CONTRACTOR SHALL NOTIFY ARCHITECT/DESIGNER IF CONDUITS ARE UNABLE TO BE INSTALLED IN-WALL PRIOR TO SURFACE MOUNTED CONDUIT INSTALLATION.
5. ALL PLASTER RINGS AND INSIDE OF BACK BOX SHALL BE PAINTED LIGHT BLUE FOR PRE-SHEETROCK / WALL PANEL IN-WALL INFRASTRUCTURE INSPECTION.

IDENTIFICATION STAMP
DIV. OF THE STATE ARCHITECT
APP: 02-123848 INC: 01
REVIEWED FOR
SS ☑ FLS ☑ ACS ☑
DATE: 05/21/2026

LPA
ARCHITECTURE ENGINEERING INTERIOR DESIGN
LANDSCAPE ARCHITECTURE PLANNING
916-287-2400 Office
LPADesignStudios.com
431 I Street, Suite 107
Sacramento, California 95814

MEP & FS / Sustainability / CxA
CONSULTING ENGINEERS
1209 Pleasant Grove Blvd.
Roseville, CA 95678
p 916-771-0778
www.lpengineers.com

This document and all other project documents, ideas, aesthetics and designs incorporated therein are instruments of service. All project documents are copyright protected, are the property of LPA, Inc. (LPA) and cannot be lawfully used in whole or in part for any project or purpose except as set forth in the contractual agreement between LPA and its Client. The unauthorized disclosure and/or use of the project documents (including the creation of derivative works), may give rise to liability for copyright infringement, unlawful disclosure, use or misappropriation of property rights held by LPA. The unauthorized use of the project documents will give rise to the recovery of monetary losses and damages including attorney fees and costs for which the unauthorized user will be held liable.
Project documents describe the design intent of the work and are not a representation of as-built or existing conditions. LPA is not responsible for any discrepancies between the project documents and the existing conditions.

© LPA, Inc.

REGISTERED PROFESSIONAL ENGINEER
SAMI S. ZEIDAN
No. E 16762
EXP. 9-30-26
ELECTRICAL
STATE OF CALIFORNIA

ELKHORN ELEMENTARY SCHOOL
CAMPUS MODERNIZATION INCREMENT 1

10505 DAVIS ROAD, STOCKTON, CA 95209

Developed for
LODI UNIFIED SCHOOL DISTRICT

Revision	Date

Submittal	Date
100% SCHEMATIC DESIGN	08/29/2025
DSA SUBMITTAL	12/16/2025

Job Number	31942
Checked By	Checker
Scale	

TECHNOLOGY SYMBOL LEGEND

1T0.02

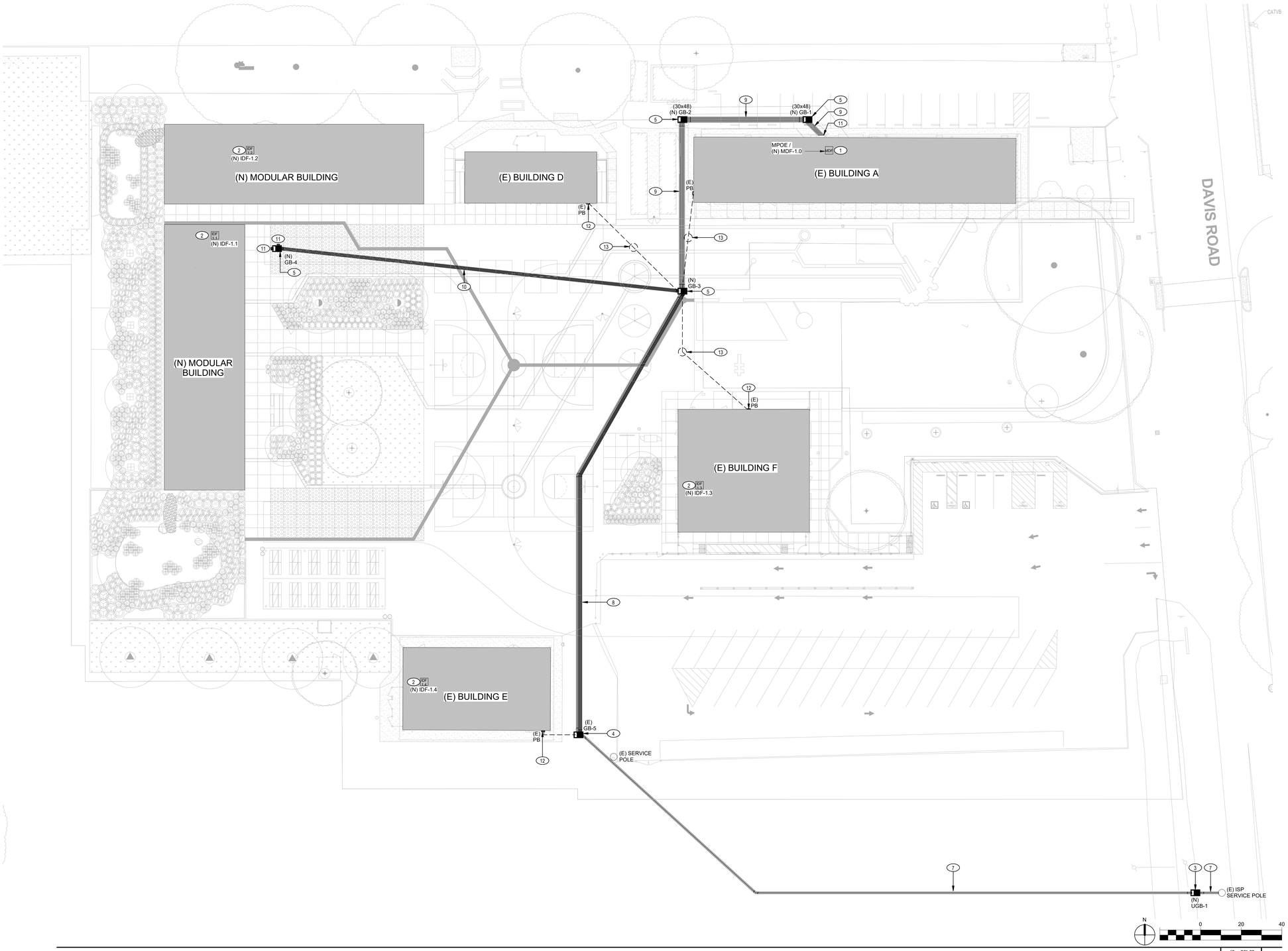

TECHNOLOGY SITE PLAN | 1" = 20'-0" | 1T0.20 | 1

TECHNOLOGY GENERAL SHEET NOTES:

A. ALL KEYNOTES ARE TYPICAL UNLESS STATED OTHERWISE.

B. REFER TO ARCHITECTURAL DRAWINGS FOR ALL BUILDING PLANS AND DIMENSIONS.

C. REFER TO ELECTRICAL DRAWINGS FOR ALL TECHNOLOGY POWER CIRCUIT REQUIREMENTS.

D. ALL EQUIPMENT SHOWN ON CONSTRUCTION DOCUMENTS SHALL BE NEW, CONTRACTOR FURNISHED/CONTRACTOR INSTALLED UNLESS SPECIFIED ON DRAWINGS AND/OR SCHEDULES.

E. ALL TECHNOLOGY SYSTEMS MUD RINGS SHALL BE PAINTED BLUE FOR A PRE-DRYWALL / FINISH INSPECTION OF IN-WALL INFRASTRUCTURE.

F. ALL EXPOSED CONDUITS SHALL BE PRIMED WHITE AND PAINTED TO MATCH SURROUNDING AREA.

G. NETWORK STATION CABLING SHALL BE TERMINATED IN PATCH PANEL(S) IN SEQUENTIAL ORDER OF ROOM NUMBER, DROP ID. CABLES SHALL BE MACHINE LABELED AT PATCH PANEL FACE, AND AT CATEGORY CABLE (BOTH ENDS AS SHOWN ON DETAILS/SPECIFICATIONS).

KEY NOTES

#	
1	NEW MDF EQUIPMENT RACK, FLOOR MOUNTED ENCLOSURE. INSTALL PER INCREMENT 2.
2	NEW IDF EQUIPMENT RACK, FLOOR MOUNTED ENCLOSURE. INSTALL PER INCREMENT 2.
3	NEW UTILITY SERVICES GROUND BOX WITH BASE EXTENSIONS AND LID. LID SHALL BE H20 TRAFFIC RATED AT ALL LOCATIONS, TYP., U.N.O. LIDS SHALL BE LABELED "UTILITY SIGNAL" OR "UTILITY COMMUNICATIONS".
4	EXISTING GROUND BOX WITH LID.
5	NEW GROUND BOX WITH BASE EXTENSIONS AND LID. LID SHALL BE H20 TRAFFIC RATED AT ALL VEHICLE OR HIGH WEIGHT CAPACITY AREAS AND CONCRETE LID AT OTHER LOCATIONS, TYP., U.N.O. LIDS SHALL BE LABELED "SIGNAL" OR "COMMUNICATIONS".
7	NEW 2 EA. 4" UNDERGROUND CONDUITS.
8	NEW 2 EA. 4" AND 5 EA. 2" UNDERGROUND CONDUITS.
9	NEW 5 EA. 4" UNDERGROUND CONDUITS.
10	NEW 5 EA. 2" UNDERGROUND CONDUITS.
11	STUB 5' FRDOM BUILDING, CAP, AND ADD TRACER WIRE WITHIN CONDUIT.
12	EXISTING WALL MOUNTED PULL BOX WITH HINGED LOCKING LID.
13	INTERCEPT EXISTING CONDUITS CONNECTED TO BUILDING C AND RE-ROUTE CONDUITS TO (N) GB-3.

IDENTIFICATION STAMP
DIV. OF THE STATE ARCHITECT
APP: 02-123848 INC: 01
REVIEWED FOR
SS ☑ FLS ☑ ACS ☑
DATE: 05/21/2026

LPA
ARCHITECTURE ENGINEERING INTERIOR DESIGN
LANDSCAPE ARCHITECTURE PLANNING
916-287-2400 Office
LPADesignStudios.com
431 I Street, Suite 107
Sacramento, California 95814

CONSULTING ENGINEERS
MEP & FS / Sustainability / CxA
1209 Pleasant Grove Blvd.
Roseville, CA 95678
p 916-771-0778
www.lpengineers.com

This document and all other project documents, ideas, aesthetics and designs incorporated therein are instruments of service. All project documents are copyright protected, are the property of LPA, Inc. (LPA) and cannot be lawfully used in whole or in part for any project or purpose except as set forth in the contractual agreement between LPA and its Client. The unauthorized disclosure and/or use of the project documents (including the creation of derivative works), may give rise to liability for copyright infringement, unlawful disclosure, use or misappropriation of property rights held by LPA. The unauthorized use of the project documents will give rise to the recovery of monetary losses and damages including attorney fees and costs for which the unauthorized user will be held liable.
Project documents describe the design intent of the work and are not a representation of as-built or existing conditions. LPA is not responsible for any discrepancies between the project documents and the existing conditions.

© LPA, Inc.

REGISTERED PROFESSIONAL ENGINEER
SAMI S. ZEIDAN
No. E 16762
EXP. 9-30-26
ELECTRICAL
STATE OF CALIFORNIA

ELKHORN ELEMENTARY SCHOOL CAMPUS MODERNIZATION INCREMENT 1

10505 DAVIS ROAD, STOCKTON, CA 95209

Developed for
LODI UNIFIED SCHOOL DISTRICT

Revision	Date

Submittal	Date
100% SCHEMATIC DESIGN	08/29/2025
DSA SUBMITTAL	12/18/2025

Job Number	31942
Checked By	Checker
Scale	

TECHNOLOGY SITE PLAN

1T0.20

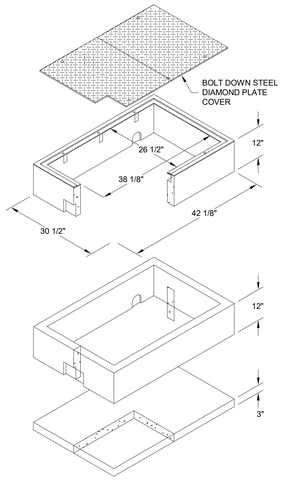

DESIGN LOAD: H-20 FULL TRAFFIC

CATALOG NUMBER	PRODUCT	DESCRIPTION	APPROX. WT. (LBS.)
B243652JHG	COVER	2 PIECE STEEL CHECKER PLATE WITH HOLD DOWN BOLTS (BLACK)	225
B2436x12	EXTENSION	12" HIGH REINFORCED CONCRETE	250
B40SL	SLAB	REINFORCED CONCRETE	108

NOTE:
1) METRIC DIMENSIONS ROUNDED TO NEAREST 5 MM.
2) FOR COMPLETE DESIGN AND PRODUCT INFORMATION CONTACT JENSEN PRECAST.

MEDIUM GROUND BOX | SCALE N.T.S | 19

① (1) EA. 2" CONDUIT
② (1) EA. 4" CONDUIT
③ (1) EA. 1" INNERDUCT OR 2" 1-CELL MAXCELL
④ 1/2" NYLON MULE STRING 900 LBS. PULL STRENGTH W/ FOOT MARKINGS

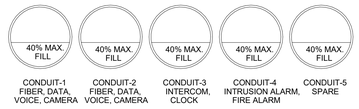

CONDUIT FILL CHART 40% FILL RATIO MAXIMUM	
CONDUIT DIA.	FILL RATIO (0.250" DIA.)
1"	6-CABLES
1-1/4"	10-CABLES
2"	26-CABLES
4"	102-CABLES

NOTE: CONTRACTOR SHALL BE REQUIRED TO UPSIZE CONDUIT AND/OR QTY AS NOTED PER FILL RATIO CABLE CAPACITY.

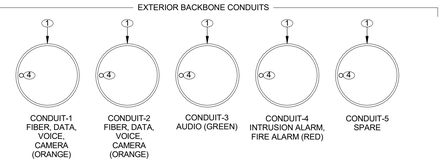

EXTERIOR BACKBONE CONDUIT, SYSTEMS LAYOUT | SCALE N.T.S | 11

① LID PER, TYPE PER GROUND BOX DETAIL
② BELL ENDS TYP.
③ PRE CAST REINFORCED CONCRETE BOX, SIZE PER PLANS
④ PRE CAST REINFORCED CONCRETE EXTENSIONS AS REQUIRED
⑤ SEAL AROUND CONDUIT, BOX & JUNCTION OF EXTENSION(S) WITH MORTAR
⑥ VAPOR RETARDER
⑦ 12" CRUSHED ROCK
⑧ REINFORCED CONCRETE BOTTOM
⑨ 1" DRAIN HOLE
⑩ FINISHED GRADE, SLOPE 1/8" OVER 12" EXTEND 4'-0"
⑪ COMPACTED SOIL
⑫ 10 AWG WIRE OR METAL TRACING TAPE PLACED ON TOP OF CONDUITS AND CONTINUOUS THROUGH OUT ENTIRE TRENCH LENGTH AND TERMINATING ON RISER UNISTRUT OR GROUNDING BAR IN GROUNDBOX
⑬ SERVICE LOOP

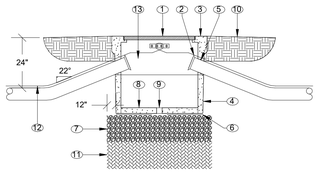

GROUND BOX, CONDUIT ENTRY | SCALE N.T.S | 04

① BOTTOM & MIDDLE PLASTIC SPACERS EVERY 5' SHALL BE USED WHERE CONDUITS HAVE TO BE STACKED ON TOP OF ONE ANOTHER DUE TO SPACE LIMITATIONS.
② COUPLING
③ REINFORCING STEEL RODS
④ OBSTRUCTION
⑤ TRENCH BOTTOM

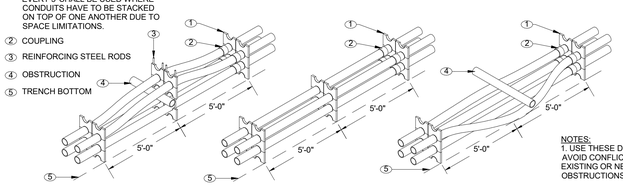

TYPICAL INSTALLATION AROUND OBSTRUCTION

TYPICAL STRAIGHT RUN INSTALLATION

TYPICAL INSTALLATION UNDER OBSTRUCTION

NOTES:
1. USE THESE DETAILS TO AVOID CONFLICTS WITH EXISTING OR NEW OBSTRUCTIONS.
2. SPACE TELECOMMUNICATIONS CONDUIT 6" FROM POWER CONDUIT (ABOVE 120V) AND 3" FROM ALL OTHER CONDUIT.

BACKBONE CONDUIT, STACK | SCALE N.T.S | 03

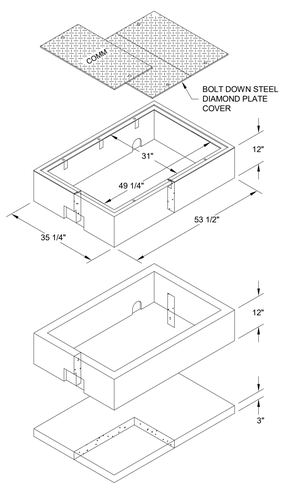

DESIGN LOAD: H-20 FULL TRAFFIC

CATALOG NUMBER	PRODUCT	DESCRIPTION	APPROX. WT. (LBS.)
B304863JHG	COVER	3 PIECE STEEL CHECKER PLATE WITH HOLD DOWN BOLTS (BLACK)	340
B3048x12	EXTENSION	12" HIGH REINFORCED CONCRETE	474
B48SL	SLAB	REINFORCED CONCRETE	406

NOTE:
1) METRIC DIMENSIONS ROUNDED TO NEAREST 5 MM.
2) FOR COMPLETE DESIGN AND PRODUCT INFORMATION CONTACT JENSEN PRECAST.

LARGE GROUND BOX | SCALE N.T.S | 21

① J-HOOK, 2" B-LINE (P/N: BCH32), MOUNT DIRECTLY TO SIDE OF GROUND BOX, TYP.
② 1/4" STAINLESS STEEL HILTI EXPANSION ANCHOR, TYP., 1" MIN. EMBEDMENT.

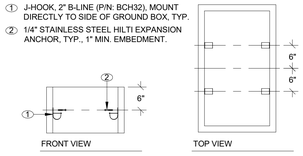

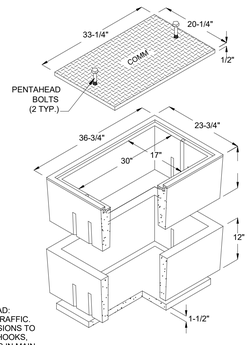

NOTES:
1. DESIGN LOAD: H-20 FULL TRAFFIC.
2. ALL EXTENSIONS TO INCLUDE J-HOOKS, NO J-HOOKS IN MAIN BOX UNLESS NO EXTENSIONS USED.

CATALOG NUMBER	PRODUCT	DESCRIPTION
B1730 N36SL	BOX WITH SLAB	REINFORCED CONCRETE
173051JH	COVER	STEEL CHECKER PLATE (H20 HEAVY DUTY)
B1730EXT	EXTENSION	12" HIGH REINFORCED CONCRETE
HDB1730	HOLD DOWN BOLT	HOLD DOWN PENTAHEAD BOLT (2 EA.)

SMALL GROUND BOX | SCALE N.T.S | 17

① (1) EA. 2" CONDUIT
② (1) EA. 4" CONDUIT
③ (1) EA. 1" INNERDUCT OR 2" 1-CELL MAXCELL
④ 1/2" NYLON MULE STRING 900 LBS. PULL STRENGTH W/ FOOT MARKINGS

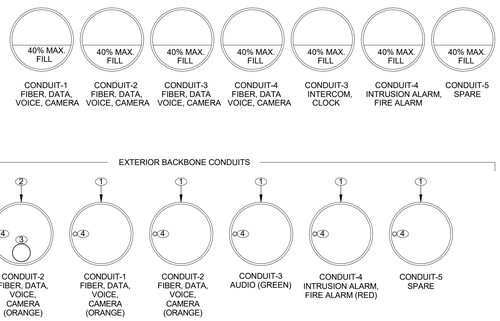

EXTERIOR BACKBONE CONDUIT, SYSTEMS LAYOUT | SCALE N.T.S | 10

① PLASTIC WARNING TAPE
② LAST 12" AB MATERIAL AT 95%% COMPACTION FOR ASPHALT AND CONCRETE, 90%% FOR PLANTED AREAS
③ 10 AWG WIRE OR METAL TRACING TAPE PLACED ON TOP OF CONDUITS AND CONTINUOUS THROUGHOUT ENTIRE TRENCH LENGTH AND TERMINATING ON RISER UNISTRUT OR GROUNDING BAR IN GROUND BOX.
④ BOTTOM AND MIDDLE PLASTIC SPACERS EVERY 5'-0" SHALL BE USED WHERE CONDUITS HAVE TO BE STACKED ON TOP OF ONE ANOTHER DUE TO SPACE LIMITATIONS
⑤ SAND AT 90% COMPACTION
⑥ SIGNAL SYSTEMS CONDUITS

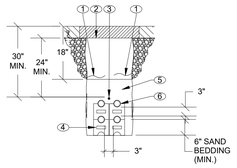

BACKBONE CONDUIT, TRENCH | SCALE N.T.S | 02

① (1) EA. 2" CONDUIT
② (1) EA. 4" CONDUIT
③ (1) EA. 1" INNERDUCT OR 2" 1-CELL MAXCELL
④ 1/2" NYLON MULE STRING 900 LBS. PULL STRENGTH W/ FOOT MARKINGS

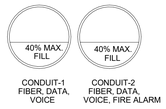

CONDUIT FILL CHART 40% FILL RATIO MAXIMUM	
CONDUIT DIA.	FILL RATIO (0.250" DIA.)
1"	6-CABLES
1-1/4"	10-CABLES
2"	26-CABLES
4"	102-CABLES

NOTE: CONTRACTOR SHALL BE REQUIRED TO UPSIZE CONDUIT AND/OR QTY AS NOTED PER FILL RATIO CABLE CAPACITY.

EXTERIOR BACKBONE CONDUIT, SYSTEMS LAYOUT | SCALE N.T.S | 09

① (1) EA. 2" CONDUIT
② (1) EA. 4" CONDUIT
③ (1) EA. 1" INNERDUCT OR 2" 1-CELL MAXCELL
④ 1/2" NYLON MULE STRING 900 LBS. PULL STRENGTH W/ FOOT MARKINGS

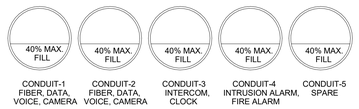

CONDUIT FILL CHART 40% FILL RATIO MAXIMUM	
CONDUIT DIA.	FILL RATIO (0.250" DIA.)
1"	6-CABLES
1-1/4"	10-CABLES
2"	26-CABLES
4"	102-CABLES

NOTE: CONTRACTOR SHALL BE REQUIRED TO UPSIZE CONDUIT AND/OR QTY AS NOTED PER FILL RATIO CABLE CAPACITY.

EXTERIOR BACKBONE CONDUIT, SYSTEMS LAYOUT | SCALE N.T.S | 01

IDENTIFICATION STAMP
DIV. OF THE STATE ARCHITECT
APP: 02-123848 INC: 01
REVIEWED FOR
SS ☑ FLS ☑ ACS ☑
DATE: 05/21/2026

LPA
ARCHITECTURE ENGINEERING INTERIOR DESIGN
LANDSCAPE ARCHITECTURE PLANNING
916-287-2400 Office
LPADesignStudios.com
431 I Street, Suite 107
Sacramento, California 95814

MEP & FS / Sustainability / CxA
CONSULTING ENGINEERS
1209 Pleasant Grove Blvd.
Roseville, CA 95678
p 916-771-0778
www.lpengineers.com

This document and all other project documents, ideas, aesthetics and designs incorporated therein are instruments of service. All project documents are copyright protected, are the property of LPA, Inc. (LPA) and cannot be lawfully used in whole or in part for any project or purpose except as set forth in the contractual agreement between LPA and its Client. The unauthorized disclosure and/or use of the project documents (including the creation of derivative works), may give rise to liability for copyright infringement, unlawful disclosure, use or misappropriation of property rights held by LPA. The unauthorized use of the project documents will give rise to the recovery of monetary losses and damages including attorney fees and costs for which the unauthorized user will be held liable.
Project documents describe the design intent of the work and are not a representation of as-built or existing conditions. LPA is not responsible for any discrepancies between the project documents and the existing conditions.

© LPA, Inc.

REGISTERED PROFESSIONAL ENGINEER
SAMI S. ZEIDAN
No. E 16762
EXP. 9-30-26
ELECTRICAL
STATE OF CALIFORNIA

ELKHORN ELEMENTARY SCHOOL
CAMPUS MODERNIZATION INCREMENT 1

10505 DAVIS ROAD, STOCKTON, CA 95209

Developed for
LODI UNIFIED SCHOOL DISTRICT

Revision	Date

Submittal	Date
100% SCHEMATIC DESIGN	08/29/2025
DSA SUBMITTAL	12/18/2025

Job Number	31942
Checked By	Checker
Scale	

TECHNOLOGY BACKBONE PATHWAYS DETAILS

1T8.01

DESIGN CRITERIA	
BASE LOCATION LOCATED AT BOTTOM OF BASEPLATE/TOP OF FOOTING	
DESCRIPTION	DESIGN VALUES
DEAD AND LIVE LOADS:	
ROOF LIVE LOAD	20 PSF
ROOF DEAD LOAD (SUPERIMPOSED ON FRAME)	5 PSF MAX
ROOF PANEL DEAD LOAD	M=1.1 PSF, G = 1.2 PSF, S = 1.3 PSF
COLLATERAL DEAD LOAD	M = 3.9 PSF, G = 3.8 PSF, S = 3.7 PSF
ROOF LIVE LOAD	
ROOF LIVE LOAD, L_r	20 PSF
ROOF SNOW LOAD	
GROUND SNOW LOAD, P_g	20 PSF
RISK CATEGORY	II
ROOF SNOW LOAD: SLOPED, P_s	20 PSF
FOR SNOW LOAD CONDITIONS ONLY - SITE APPLICATION REVIEWER SHALL VERIFY THE STTRUCTURE SHALL BE LOCATED AT LEAST 20 FEET	
FROM ANY ADJACENT STRUCTURE FOR SNOW DRIFT.	
SNOW LOAD SLOPE FACTOR, C_s	1.0
SNOW LOAD EXPOSURE FACTOR, C_e	1.0
SNOW LOAD IMPORTANCE FACTOR, I_s	1.0
THERMAL FACTOR, C_t	1.2
LOWEST ANTICIPATED SERVICE TEMPERATURE	30`
WIND DESIGN	
BASIC WIND SPEED (3 SECOND GUST), V_{ult}, V_{asd}	100 MPH, 78 MPH
RISK CATEGORY	II
EXPOSURE CATEGORY	C
FACTORS: K_c, K_{zt}, K_d	0.85, 1.0, 0.85
$q_h = 0.00256\ K_z\ K_{zt}\ K_d\ V^2$	18.50 PSF
C_{NW} PER ASCE FIGURE 27.3-5 ROOF ANGLE 18.43 - CLEAR / OBSTRUCTED	CASE A (1.1 / -1.2) CASE B (0.01 / -0.69)
C_{NL} PER ASCE FIGURE 27.3-5 ROOF ANGLE 18.43 - CLEAR / OBSTRUCTED	CASE A (-0.17 / -1.09) CASE B (-0.96 / -1.65)
C_N PER ASCE FIGURE 27.3-7 PARALLEL TO RIDGE - CLEAR / OBSTRUCTED (< h)	CASE A (-0.8 / -1.2) CASE B (0.8 / 0.5)
C_N PER ASCE FIGURE 27.3-7 PARALLEL TO RIDGE - CLEAR / OBSTRUCTED (> h, < 2h)	CASE A (-0.6 / -0.9) CASE B (0.5 / 0.5)
C_N PER ASCE FIGURE 27.3-7 PARALLEL TO RIDGE - CLEAR / OBSTRUCTED (>2h)	CASE A (-0.3 / -0.6) CASE B (0.3 / 0.3)
COMPONENTS & CLADDING - C_N (PRESSURE/SUCTION) CLEAR / OBSTRUCTED	ZONE 3 - (2.29 / -2.11) / (1.0 / -3.0)
	ZONE 2 - (1.77 / -1.63) / (0.8 / -2.3)
	ZONE 1 - (1.15 / -1.05) / (0.5 / -1.5)
SEISMIC DESIGN	
LATERAL FORCE RESISTING SYSTEM	STEEL - ORDINARY CANTILEVER COLUMN
ANALYSIS PROCEDURE	EQUIVALENT LATERAL FORCE
SEISMIC MORTANCE FACTOR, I_e	1.0
SEISMIC SITE CLASS	D
MCE_R SPECTRAL RESPONSE ACCELERATION @ 0.2 s, S_s	2.60
MCE_R SPECTRAL RESPONSE ACCELERATION @ 0.2 s, S_1	0.90
SHORT PERIOD SITE COEFFICIENT, F_a	1.20
LONG PERIOD COEFFICIENT, F_v	1.70
FUNDAMENTAL PERIOD OF THE STRUCTURE, T (WORST CASE FOR ALL STRUCTURES)	0.152 s
DESIGN SPECTRAL RESPONSE ACCELERATION AT SHORT PERIOD, S_{DS}	2.08 ☐
DESIGN SPECTRAL RESPONSE ACCELERATION AT SHORT PERIOD, S_{DS} - USED TO DETERMINE Cs (WITH CAP PER ASCE 7 12.8.1.3) SOIL PROPERTIES MAY NOT BE CLASSIFIED AS SITE CLASS E	2.08 * 0.70 = 1.456 ☐
DESIGN SPECTRAL RESPONSE ACCELERATION AT 1-s PERIODS, S_{D1}	1.02
SEISMIC DESIGN CATEGORY	E
SITE SPECFIC RESPONSE ANALYSIS NOT REQUIRED PER ASCE 7 11.4.8 EXCEPTION 2	T_s = 0.49 s T < 1.5 * T_s
RESPONSE MODIFICATION FACTOR, R	1.25
OVERSTRENGTH FACTOR, Ω	1.25
REDUNDANCY FACTOR, ρ	1.0
HORIZONTAL OR VERTICAL IRREGULARITIES	NONE
SEISMIC RESPONSE COEFFICIENT, C_s (20' WIDE, 30' WIDE, 40' WIDE)	1.16 1.00 1.00
DESIGN BASE SHEAR, V (20' WIDE, 30' WIDE, 40' WIDE) (WORST CASE)	10.62 PSF ☐ 12.70 PSF ☒ 12.85 PSF ☐
ALLOWABLE SOIL BEARING FOR FOUNDATIONS	VARIES - SEE FOUNDATION CHARTS
FLOOD DESIGN - DESIGN IS ASSUMED TO NOT BE IN FLOOD HAZARD AREA	
IF PROJECT IS LOCATED IN A FLOOD ZONE OTHERTHAN ZONE X, A LETTER STAMPED & SIGNED FROM A SOILS ENGINEER IS REQUIRED TO VALIDATE THE ALLOWABLE SOIL VALUES SPECIFIED.	

STRUCTURAL SEPARATION

ALL DEFLECTIONS SHOWN ALSO INCLUDE THE P-DELTA ROTATION PER IR PC-7

SEPARATION IS THE SUM OF 2 OF THESE SELECTED DEFLECCTION

DEFLECTIONS ARE FOR (1) STRUCTURE

SOIL CLASSES PER CBC TABLE 1806A.2

MAXIMUM DRIFT δ_{max} SIDE COLUMNS	Soil Class 5	Soil Class 4	Soil Class 3
20' WIDE (8' EAVE HT, 10' EAVE HEIGHT, 12' EAVE HT) (INCHES)	[ ] 2.40	[ ] 2.55	[ ] 2.65
30' WIDE (8' EAVE HT, 10' EAVE HEIGHT, 12' EAVE HT) (INCHES)	[ ] 2.15	[X] 2.30	[ ] 2.40
40' WIDE (8' EAVE HT, 10' EAVE HEIGHT, 12' EAVE HT) (INCHES)	[ ] 2.20	[ ] 2.20	[ ] 2.30
MINIMUM SEPARATION ($\delta_m = C_d\ \delta_{max}$) C_d = 1.25			
20' WIDE (8' EAVE HT, 10' EAVE HEIGHT, 12' EAVE HT) (INCHES)	[ ] 3.00	[ ] 3.19	[ ] 3.31
30' WIDE (8' EAVE HT, 10' EAVE HEIGHT, 12' EAVE HT) (INCHES)	[ ] 2.69	[X] 2.88	[ ] 3.00
40' WIDE (8' EAVE HT, 10' EAVE HEIGHT, 12' EAVE HT) (INCHES)	[ ] 2.75	[ ] 2.75	[ ] 2.88

MAXIMUM DRIFT δ_{max} END COLUMNS	Soil Class 5	Soil Class 4	Soil Class 3
20' WIDE (8' EAVE HT, 10' EAVE HEIGHT, 12' EAVE HT) (INCHES)	[ ] 2.40	[ ] 2.55	[ ] 2.65
30' WIDE (8' EAVE HT, 10' EAVE HEIGHT, 12' EAVE HT) (INCHES)	[ ] 2.15	[X] 2.30	[ ] 2.40
40' WIDE (8' EAVE HT, 10' EAVE HEIGHT, 12' EAVE HT) (INCHES)	[ ] 2.20	[ ] 2.20	[ ] 2.30
MINIMUM SEPARATION ($\delta_m = C_d\ \delta_{max}$) C_d = 1.25			
20' WIDE (8' EAVE HT, 10' EAVE HEIGHT, 12' EAVE HT) (INCHES)	[ ] 3.00	[ ] 3.19	[ ] 3.31
30' WIDE (8' EAVE HT, 10' EAVE HEIGHT, 12' EAVE HT) (INCHES)	[ ] 2.69	[X] 2.88	[ ] 3.00
40' WIDE (8' EAVE HT, 10' EAVE HEIGHT, 12' EAVE HT) (INCHES)	[ ] 2.75	[ ] 2.75	[ ] 2.88

INSTRUCTIONS FOR ARCHITECTS SUBMITTING THESE PRE-CHECKED DRAWINGS TO DSA:

BEFORE SUBMITTING THESE PRE-CHECKED DRAWINGS FOR YOUR PROJECT, FOLLOW THE STEPS BELOW TO PROPERLY DEFINE THE APPROVED OPTIONS:

STEP 1: SELECT FRAME DIMENSIONS FOR YOUR PROJECT
- GABLE STRUCTURES UP TO 20' WIDE USE THE "RG 20" BASE FRAME
- GABLE STRUCTURES UP TO 30' WIDE USE THE "RG 30" BASE FRAME
- GABLE STRUCTURES UP TO 40' WIDE USE THE "RG 40" BASE FRAME
- MAXIMUM WIDTH IS 40' (SEE "ARCHITECTURAL VIEWS" SHEET FOR REFERENCE)
- THE 24', 44', 64', 84' AND 104' LENGTHS ARE SUGGESTED BECAUSE THEY ARE THE MOST COMMON (20' BAYS ARE THE MOST ECONOMICAL)
- FRAME LENGTHS ASSUME 2' OVERHANGS (UNO BY ARCHITECT – 2' MAX DIMENSION)

STEP 1	FRAME DIMENSIONS				
		SUGGESTED			OTHER
FRAME WIDTH	[ ] 20'	[X] 30'	[ ] 40'		[ ] (40' MAX)
FRAME LENGTH	[ ] 44'	[X] 64'	[ ] 84'	[ ] 104'	[ ] (NO MAX)

STEP 2: SELECT ROOF DECK FOR YOUR PROJECT
- "M" REPRESENTS McELROY METAL "MULTI-RIB" ROOF PANEL
- "G" REPRESENTS McELROY METAL "MEGA-RIB" ROOF PANEL
- "S" REPRESENTS McELROY METAL "MEDALLION-LOK" 16" STANDING SEAM ROOF PANEL

STEP 2	ROOF PANEL			
ROOF PANEL TYPE	[ ] M	[ ] G	[X] S	

STEP 3: IDENTIFY THE Ss ACCELERATION (g) FOR YOUR PROJECT
- Ss VALUE DETERMINES THE REQUIRED SEISMIC DESIGN FORCES
- Ss VALUE DEPENDS ON THE PROJECTS GEOGRAPHICAL LOCATION (VALUES RANGE FROM 0.00 TO 3.73)
  - FIND Ss VALUES FOR YOUR PROJECT ON THE USGS WEBSITE (SEARCH INTERNET FOR "USGS SEISMIC DESIGN MAPS")

STEP 3	PROJECT SITE – Ss ACCELERATION (g)
	0.706

STEP 4: IDENTIFY THE Ss REGION FOR YOUR PROJECT
- THE REGIONS ARE DEPENDANT ON THE Ss VALUE DETERMINED IN STEP 3
- THE Ss REGION DICTATES THE MAXIMUM DEAD LOAD PERMITTED ON THE FRAME

STEP 4	Ss REGION		
		Ss REGIONS	MAX DEAD LOAD
DESCRIPTION		0 < Ss <= 2.14	5 PSF
		2.14 < Ss <= 2.50	5 PSF
		2.50 < Ss <= 2.60	5 PSF

STEP 5: IDENTIFY THE ROOF DEAD LOAD FOR YOUR PROJECT
- THE ROOF DECK DEAD LOAD WILL ALWAYS BE INCLUDED
- THE COLLATERAL LOAD REPRESENTS ADDITIONAL LOAD THAT CAN BE SUPPORTED BY THE FRAME
- BE SURE THE TOTAL ROOF DEAD LOAD FOR YOUR PROJECT IS LESS THAN OR EQUAL TO THE MAX DEAD LOAD SHOWN IN STEP 4 FOR YOUR Ss VALUE
- Sds VALUE USED IN CALCULATION IS THE CAPPED Sds (SEE DESIGN CRITERIA)

STEP 5	TOTAL ROOF DEAD LOAD		
		DEAD LOAD	EXAMPLES
	ROOF DECK	1.3 PSF	M=1.1PSF; G=1.2PSF ;S=1.3PSF (SEE STEP 2)
	COLLATERAL	0 PSF	LIGHTNING,FIRE SUPPRESSION,SOLAR PANELS,ETC
	TOTAL	1.3 PSF	ADD ROOF DECK AND COLLATERAL LOADS (MAX 5 PSF)

STEP 6: IDENTIFY THE FOUNDATION REQUIREMENTS FOR YOUR PROJECT
- IDENTIFY SOIL CLASS FOR PROJECT SITE PER SITE SPECIFIC SOIL CONDITIONS
- USE THIS TO SELECT CORRECT FOUNDATION SIZE ON FOUNDATION SHEET

AREA OVER 4000 SQFT REQUIRES A GEOHAZARD REPORT

STEP 6	FOUNDATION REQUIREMENTS		
	[ ] GEOTECHNICAL REPORT NOT REQUIRED	[X] GEOTECHNICAL REPORT REQUIRED	
	SOIL CLASS 5 (BEARING) 1500 PSF [ ]	SOIL CLASS 4 (BEARING) 2000 PSF [X]	SOIL CLASS 3 (BEARING) 3000 PSF [ ]
	SOIL CLASS 5 (LATERAL BEARING) 200 PSF/FT	SOIL CLASS 5 (LATERAL BEARING) 300 PSF/FT	SOIL CLASS 5 (LATERAL BEARING) 400 PSF/FT
	COHESION 130 PSF	FRICTION COEFFICIENT 0.25	FRICTION COEFFICIENT 0.30

STEP 7: SELECT MISCELLANEOUS OPTIONS FOR YOUR PROJECT
- MAXIMUM CLEAR HEIGHT IS 12'-0"; (SEE "ARCHITECTURAL VIEWS" SHEET FOR REFERENCE)
- MARK UP PC DRAWINGS WITH SIZE AND LOCATION OF CUTOUTS BEFORE SUBMITTING TO DSA

STEP 7	MISCELLANEOUS		
		DESIGN OPTIONS	
	CLEAR HEIGHT	[ ] 8' [ ] 10' [X] 12'	[ ] ' (12' MAX)
	ELECTRICAL CUTOUTS	[X] YES	[ ] NO
	GUTTERS	[X] YES	[ ] NO

STEP 8: SELECT APPLICABLE SHEET INDEX FOR YOUR PROJECT
- REFERENCE THE BASE FRAME (STEP 1) AND THE ROOF PANEL TYPE (STEP 2)
- IDENTIFY THE APPLICABLE SHEET INDEX

STEP 8	SHEET INDEX								
BASE FRAME	RG 20			RG 30			RG 40		
ROOF PANEL TYPE	M	G	S	M	G	S	M	G	S
SELECT ONE	[ ]	[ ]	[ ]	[ ]	[ ]	[X]	[ ]	[ ]	[ ]
GENERAL NOTES	LS1.0	LS1.0	LS1.0	LS1.0	LS1.0	LS1.0	LS1.0	LS1.0	LS1.0
FOUNDATION PLAN	LS2.0	LS2.0	LS2.0	LS3.0	LS3.0	LS3.0	LS4.0	LS4.0	LS4.0
FRAMING PLAN	LS2.1	LS2.1	LS2.1	LS3.1	LS3.1	LS3.1	LS4.1	LS4.1	LS4.1
FRAME CONNECTION DETAILS	LS2.1	LS2.1	LS2.1	LS3.1	LS3.1	LS3.1	LS4.1	LS4.1	LS4.1
ROOFING LAYOUT & DETAILS	LS2.2	LS2.2	LS2.4	LS3.2	LS3.3	LS3.4	LS4.2	LS4.3	LS4.4
MISC DESIGN OPTIONS	LS5.0	LS5.0	LS5.0	LS5.0	LS5.0	LS5.0	LS5.0	LS5.0	LS5.0
DSA 103 EXAMPLE	LS1.2	LS1.2	LS1.2	LS1.2	LS1.2	LS1.2	LS1.2	LS1.2	LS1.2
–	LS1.3	LS1.3	LS1.3	LS1.3	LS1.3	LS1.3	LS1.3	LS1.3	LS1.3
–									

STEP 9: INCLUDE APPLICABLE SHEETS WITH YOUR DSA SUBMITTAL
- INCLUDE "MISC DESIGN OPTIONS" SHEET FOR PROJECTS WITHOUT ELECTRICAL CUTOUTS OR GUTTERS

STEP 10: IDENTIFY PROJECT NAME AND LOCATION

PROJECT NAME:	SCHOOL DISTRICT:
Elkhorn Elementary School	Lodi USD

STEP 11: CROSS OUT EXAMPLE 103 FORMS & INCORPORATE REQUIRED SPECIAL INSPECTIONS 103 FORMS THAT ARE PROJECT SPECIFIC

SELECT ONE

SITE SPECIFIC PARAMETERS

INSTRUCTIONS: DESIGN PROFESSIONAL SHALL CHECK THE APPROPRIATE SELECTION BOXES BELOW AND ENTER THE DESIGN PARAMETERS APPLICABLE TO THE SPECIFIC PROJECT SITE

SNOW
Pg = 0 psf
Pf = 0 psf
Ce = 1.0 psf

WIND
V = 100 mph < XX mph
kzt = 1.0 <1
EXPOSURE: C☒ D☐

SEISMIC:

☐ DESIGN BASED ON SITE CLASS D
NO GEOTECHNICAL INVESTIGATION REQUIRED
Ss = _____ Fa = 1.2

☒ DESIGN BASED ON SITE CLASS DETERMINED PER CHAPTER 20 OF ASCE 7-16
GEOTECHNICAL INVESTIGATION PROVIDED
SITE CLASS: C ☐ D☒ E☐
Ss = 0.706 g Fa = 1.235 PER ASCE 7-16 SUPPL 3, TABLE 11.4-1

☐ DESIGN BASED ON SITE SPECIFIC GROUND MOTION HAZARD ANALYSIS PER CHAPTER 21 OF ASCE 7-16
SHORT-PERIOD DESIGN SPECTRAL RESPONSE PARAMETER, Sds, SHALL BE AS SPECIFIED IN GEOTECHNICAL INVESTIGATION
AREA OVER 4000 SQFT REQUIRES A GEOHAZARD REPORT
CGS APPROVAL REQUIRED
NOT ELIGIBLE FOR OTC REVIEW
SITE CLASS: C☐ D☐ E☐

Sds = Fa Ss = 1.235 x 0.706 = 0.872

☒ SITE CLASS C or D: 0.7 x Sds* = 0.7 x 0.872 = 0.610 < X.XX
☐ SITE CLASS E: Sds = _____ < X.XX
Cs= X.XXX USED IN DESIGN
SEISMIC DESIGN CATEGORY D☒ E☐

*SITE SPECIFIC Sds VALUE BEFORE APPLYING REDUCTION ALLOWED BY ASCE 7 SECTION 12.8.1.3

ABBREVIATIONS:

ACI	AMERICAN CONCRETE INSTITUTE	MPH	MILES PER HOUR
AISC	AMERICAN INSTITUTE OF STEEL CONSTRUCTION	M	MULTI-RIB ROOF PANEL (MCELROY)
ASM	ASSEMBLY (INTERNAL REFERENCE)	NTS	NOT TO SCALE
ASTM	AMERICAN SOCIETY FOR TESTING AND MAT'LS	NO	NUMBER
AWS	AMERICAN WELDING SOCIETY	OC	ON CENTER
CBC	CALIFORNIA BUILDING CODE	OSHA	OCCUPATIONAL HEALTH AND SAFETY ADMIN
CJP	COMPLETE JOINT PENETRATION	PCF	POUNDS PER CUBIC FOOT
CLR	CLEAR	PJ	PRETENSIONED JOINT
DEG	DEGREE	PLCS	PLACES
DIA	DIAMETER	PLT	PLATE
DIM	DIMENSION	PSF	POUNDS PER SQUARE FOOT
DSA	DIVISION OF THE STATE ARCHITECT	PSI	POUNDS PER SQUARE INCH
EQ	EQUAL	QTY	QUANTITY
FT	FEET	REF	REFERENCE
GA	GAGE	SQ	SQUARE
IN	INCHES	SS	STANDING SEAM ROOF PANEL (MCELROY)
KSI	KIPS PER SQUARE INCH	TYP	TYPICAL
MAX	MAXIMUM	UNO	UNLESS NOTED OTHERWISE
MIN	MINIMUM	USGS	U.S. GEOLOGICAL SURVEY
MISC	MISCELLANEOUS	W/	WITH

ARCHITECTURAL REQUIREMENTS

DESCRIPTION	DESIGN VAULES
TYPE OF CONSTRUCTION	II-B
OCCUPANCY CLASSIFICATION	A-3
NUMBER OF STORIES	1
FIRE SPRINKLER SYSTEM	NOT BY ICON/WEIGHT NOT INCLUDED IN DESIGN
MOST COMMON RG20 MIN/MAX SQ.FT (SEE STEP 1)	480/2,080
MOST COMMON RG30 MIN/MAX SQ.FT (SEE STEP 1)	720/3,120
MOST COMMON RG40 MIN/MAX SQ.FT (SEE STEP 1)	960/4,160

AREA OVER 4000 SQFT REQUIRES GEOHAZARD REPORT
ALLOWABLE AREA FOR II-B / A-3 IS 9500 SQ.FT

RELATED BUILDING CODES AND STANDARDS

TITLE 24 CODES:

2022 CALIFORNIA ADMINISTRATIVE CODE (CAC).....(PART 1, TITLE 24, CCR)
2022 CALIFORNIA BUILDING CODE (CBC),PART 2, TITLE 24 CCR
2022 CALIFORNIA ELECTRICAL CODE.....(PART 3, TITLE 24, CCR)
2022 CALIFORNIA MECHANICAL CODE (CMC).....(PART 4, TITLE 24, CCR)
2022 CALIFORNIA PLUMBING CODE (CPC).....(PART 5, TITLE 24, CCR)
2022 CALIFORNIA ENERGY CODE.....(PART 6, TITLE 24, CCR)
2022 CALIFORNIA FIRE CODE (CFC) .....(PART 9, TITLE 24, CCR)
2022 CALIFORNIA GREEN BUILDING STANDARDS CODE.....(PART 11, TITLE 24, CCR)
2022 CALIFORNIA REFERENCE STANDARDS CODE.....(PART 12, TITLE 24, CCR)
TITLE 19 CCR, PUBLIC SAFETY, STATE FIRE MARSHAL REGULATIONS

REFERENCE CODE SECTIONS FOR APPLICABLE STANDARDS:
2022 CBC, CHAPTER 35
2022 CFC, CHAPTER 80

SCOPE OF WORK NARRATIVE

THESE DRAWINGS ILLUSTRATE THE FABRICATION AND INSTALLATION REQUIREMENTS FOR A FREE-STANDING PREFABRICATED STEEL SHADE STRUCTURE. THE ENTIRE STRUCTURAL SYSTEM IS COMPRISED OF HOLLOW STRUCTURAL STEEL MEMBERS SUPPORTED BY CONCRETE FOUNDATIONS. THE FLEXIBILITY INCLUDED HEREIN ALLOWS THE STRUCTURE TO COMPLY WITH A WIDE VARIETY OF PROJECT SITES AND LOADING REQUIREMENTS.

PRE-CHECK (PC) DOCUMENT
Code: 2022 CBC
A separate project application for construction is required.

PRINTED ON :

ICON STD	RO/DSA-PC
DRAWN BY	JD
DATE	3/21/2023
REV	
REV DATE	

JRMA ARCHITECTS ENGINEERS
2700 SATURN ST | BREA, CA 92821
T. 714.524.1870 | F. 714.524.1875
WWW.JRMA.COM

REGISTERED PROFESSIONAL ENGINEER
Aug 31, 2023

APPROVED
DIV. OF THE STATE ARCHITECT
APP: 04-122188 PC
REVIEWED FOR
SS ☑ FLS ☑ ACS ☑ CG ☐
DATE: 09/21/2023

GENERAL INFO

ICON Shelter Systems Inc
DISTINCTIVE STEEL SHELTERS
WWW.ICONSHELTERS.COM
COPYRIGHT 2004, ICON SHELTER SYSTEMS, INC.
1455 LINCOLN AVE
HOLLAND MI, 49423
616.396.0919
800.748.0985
616.396.0944 FX

LS1.0

IDENTIFICATION STAMP
DIV. OF THE STATE ARCHITECT
APP: 02-123848 INC: 01
REVIEWED FOR
SS ☑ FLS ☑ ACS ☑
DATE: 05/21/2026

LPA
ARCHITECTURE ENGINEERING INTERIOR DESIGN
LANDSCAPE ARCHITECTURE PLANNING
949-261-1001 Office
LPADesignStudios.com
5301 California Avenue, Suite 100
Irvine, California 92617

This document and all other project documents, ideas, aesthetics and designs incorporated therein are instruments of service. All project documents are copyright protected, are the property of LPA, Inc. (LPA) and cannot be lawfully used in whole or in part for any project or purpose except as set forth in the contractual agreement between LPA and its Client. The unauthorized disclosure and/or use of the project documents (including the creation of derivative works), may give rise to liability for copyright infringement, unlawful disclosure, use or misappropriation of property rights held by LPA. The unauthorized use of the project documents will give rise to the recovery of monetary losses and damages including attorney fees and costs for which the unauthorized user will be held liable.
Project documents describe the design intent of the work and are not a representation of as-built or existing conditions. LPA is not responsible for any discrepancies between the project documents and the existing conditions.

© LPA, Inc.

ELKHORN ELEMENTARY SCHOOL
CAMPUS MODERNIZATION INCREMENT 1

10505 DAVIS ROAD, STOCKTON, CA 95290

Developed for
LODI UNIFIED SCHOOL DISTRICT

Submittal	Date
100% SCHEMATIC DESIGN	08/28/2025
DSA SUBMITTAL	12/18/2025

Revision	Date

Job Number	3194201
Checked By	AW, EW
Scale	AS NOTED

GENERAL INFO

1PC1.00

GENERAL:

1. GENERAL NOTES AND TYPICAL DETAILS SHALL APPLY TO ALL PARTS OF THE JOB EXCEPT WHERE THEY MAY CONFLICT WITH DETAILS AND NOTES ON OTHER SHEETS. WHERE CONDITIONS ARE NOT SPECIFICALLY INDICATED BUT ARE OF SIMILAR CHARACTER TO DETAILS SHOWN, SIMILAR DETAILS OF CONSTRUCTION SHALL BE USED SUBJECT TO REVIEW BY THE STRUCTURAL ENGINEER FOR THIS PROJECT.
2. WORK SHALL CONFORM TO THE REQUIREMENTS, AS AMENDED TO DATE, OF THE LATEST ADOPTED EDITION OF THE CBC, C.A.C. TITLE 24, AND ALL STATE AND FEDERAL REGULATIONS.
3. OMISSIONS OR CONFLICTS BETWEEN THE VARIOUS ELEMENTS OF THE WORKING DRAWINGS AND/OR SPECIFICATIONS SHALL BE BROUGHT TO THE ATTENTION OF THE STRUCTURAL ENGINEER FOR THIS PROJECT PRIOR TO PROCEEDING WITH ANY WORK INVOLVED.
4. THE CONTRACTOR SHALL BE RESPONSIBLE FOR COORDINATING THE WORK OF ALL TRADES AND SHALL CHECK ALL DIMENSIONS, ALL DISCREPANCIES SHALL BE CALLED TO THE ATTENTION OF THE STRUCTURAL ENGINEER FOR THIS PROJECT AND BE RESOLVED BEFORE PROCEEDING WITH THE WORK.
5. THESE CONSTRUCTION DRAWINGS AND SPECIFICATIONS REPRESENT THE FINISHED STRUCTURE AND DO NOT INDICATE THE METHOD OF CONSTRUCTION. THE CONTRACTOR SHALL SUPERVISE AND DIRECT THE WORK AND SHALL BE SOLELY RESPONSIBLE FOR CONSTRUCTION MEANS, METHODS, TECHNIQUES, SEQUENCES AND PROCEDURES, INCLUDING, BUT NOT LIMITED TO, BRACING, TEMPORARY SUPPORTS, AND SHORING. OBSERVATION VISIT TO THE SITE BY FIELD REPRESENTATIVES OF THE ARCHITECT/ENGINEER SHALL NOT INCLUDE INSPECTIONS OF THE PROTECTIVE MEASURES OR THE CONSTRUCTION PROCEDURES. ANY SUPPORT SERVICES PERFORMED BY THE ARCHITECT/ENGINEER DURING THE CONSTRUCTION SHALL BE DISTINGUISHED FROM CONSTRUCTION AND DETAILED INSPECTION SERVICES WHICH ARE FURNISHED BY OTHERS. THESE SUPPORT SERVICES PERFORMED BY THE ARCHITECT/ENGINEER, WHETHER OF MATERIAL OR WORK, ARE FOR THE PURPOSE OF ASSISTING IN QUALITY CONTROL AND IN ACHIEVING CONFORMANCE WITH CONTRACT DOCUMENTS, BUT DO NOT GUARANTEE CONSTRUCTION.
6. ASTM DESIGNATIONS AND ALL STANDARDS REFER TO THE LATEST AMENDMENTS, EXCEPT AS AMENDED BY CBC CHAPTER 35.
7. CONFORM TO APPLICABLE CAL/OSHA CONSTRUCTION SAFETY REGULATIONS FOR ALL WORK PERFORMED DURING CONSTRUCTION. JOB SITE SAFETY IS STRICTLY THE RESPONSIBILITY OF THE CONTRACTOR AND NOT THE ARCHITECT/ENGINEER OR OWNER.
8. THE ENGINEER AND THEIR CONSULTANTS SHALL HAVE NO RESPONSIBILITY FOR THE DISCOVERY, HANDLING, REMOVAL OR DISPOSAL OF HAZARDOUS MATERIALS AT THE PROJECT SITE, INCLUDING BUT NOT LIMITED TO ASBESTOS, ASBESTOS PRODUCTS, POLYCHLORINATED BIPHENYL (PCB) OR OTHER TOXIC SUBSTANCES.
9. SHOULD ANY CONDITIONS DEVELOP NOT COVERED BY THE CONTRACT DOCUMENTS, OR IF A CHANGE IN THE SCOPE OF WORK IS PROPOSED, A CONSTRUCTION CHANGE DOCUMENT DETAILING AND SPECIFYING THE REQUIRED CHANGE(S) SHALL BE SUBMITTED TO AND APPROVED BY DSA BEFORE PROCEEDING WITH THE WORK.
10. THE SCHOOL DISTRICT INSPECTOR ON RECORD SHALL INSPECT AND APPROVE THE ERECTED FRAME PRIOR TO ROOF INSTALLATION.
11. SEE REQUIREMENTS FOR LOCATION IN ANY FIRE HAZARD SEVERITY ZONE FOR WILDLAND URBAN INTERFACE AREAS (WUI) AS SPECIFIED IN THE APPLICABLE VERSION OF THE CALIFORNIA BUILDING CODE, PROVIDE PROTECTION AND DETAILS OF ALL AREAS COMPLYING WITH THE WUI REQUIREMENTS. SEE CBC CHAPTER 7A FOR REQUIREMENTS
12. LOCATING THIS STRUCTURE CLOSER THAN 20 FEET TO OTHER STRUCTURES MAY AFFECT THE ALLOWABLE AREA FOR THE EXISTING CONSTRUCTION PER THE APPLICABLE VERSION OF THE CALIFORNIA BUILDING CODE.
13. VIEWS AND DETAILS ARE NOT DRAWN TO SCALE (UNLESS NOTED OTHERWISE). DO NOT SCALE THESE DRAWINGS.

STRUCTURAL AND MISCELLANEOUS STEEL:

1. ALL STRUCTURAL STEEL SHALL BE DETAILED, FABRICATED AND ERECTED IN ACCORDANCE WITH THE AMERICAN INSTITUE OF STEEL CONSTRUCTION (AISC) SPECIFICATION MANUAL REFERENCED BY THE LATEST EDITION OF THE CALIFORNIA BUILDING CODE.
2. PIPE SECTIONS SHALL CONFORM TO ASTM A53, Fy = 35 KSI, GRADE B OR A501 UNLESS NOTED OTHERWISE.
3. STRUCTURAL TUBING (HSS SHAPES) SHALL CONFORM TO ASTM A-500, GRADE B (OR C), Fy = 46 KSI. MIN.
4. IF MATERIAL AVAILABILITY IS LIMITED, MEMBER THICKNESS CAN BE INCREASED BEYOND WHAT IS SHOWN IN THESE DRAWINGS (MAXIMUM INCREASE OF 1/8").
5. ALL CHANNELS, ANGLES, AND MISC. STEEL SHALL CONFORM TO ASTM A-36, Fy = 36 KSI.
6. ALL PLATE STEEL SHALL CONFORM TO ASTM A-572, Fy= 50 KSI.
7. ALL COLD FORM STEEL SHALL CONFORM TO ASTM A-653, CS = TYPE B, Fy = 50 KSI Fu = 65 KSI
8. STRUCTURAL STEEL AND DECK SHALL BE IDENTIFIED FOR CONFORMITY PER CBC 2202A.1.
9. ALL ROOF DECKS SHALL HAVE KYNAR 500 METAL COATING.
10. ALL ROOF DECKS SHALL CONFORM TO ASTM A-792, Fy = 50 KSI.
11. ALL BASE CONNECTIONS ARE A PART OF THE LATERAL FORCE RESISTING SYSTEM

NOTICE OF DISCLAIMER FOR STRUCTURAL ENGINEERING RESPONSIBILITY

1. PER TITLE 24, PART 1, SECTION 4-316(a) OF THE CALIFORNIA CODE OF REGULATIONS, THIS NOTICE SHALL BE GIVEN TO DSA PRIOR TO THE APPROVAL OF PLANS AND SPECIFICATIONS.
2. FOR THE SITE SPECIFIC PROJECT, J. R. MILLER & ASSOCIATES IS NOT THE DESIGN PROFESSIONAL IN GENERAL RESPONSIBLE CHARGE.
3. FOR THE SITE SPECIFIC PROJECT, J.R. MILLER & ASSOCIATES' RESPONSIBILITY IS LIMITED TO THE PREPARATION OF THE PLANS AND SPECIFICATIONS FOR THE SHELTERS OF THIS PC ONLY.
4. STRUCTURAL OBSERVATION OF CONSTRUCTION IS SPECIFICALLY EXCLUDED FROM J.R. MILLER & ASSOCIATES' RESPONSIBILITY FOR THE SITE SPECIFIC PROJECT.
5. ALL CONSTRUCTION ACTIVITIES RELATED TO STRUCTURAL ENGINEERING SHALL BE DELEGATED TO A QUALIFIED ENGINEER BY THE DESIGN PROFESSIONAL IN GENERAL RESPONSIBLE CHARGE. THESE ACTIVITIES INCLUDE, BUT ARE NOT LIMITED TO, STRUCTURAL OBSERVATION OF CONSTRUCTION, REVIEW OF INSPECTION REPORTS, AND SIGNING OFF OF THE VERIFIED REPORT FOR COMPLETED WORK.
6. J.R. MILLER & ASSOCIATES WILL BE RESPONSIBLE FOR RESPONDING TO QUESTIONS PERTAINING TO THE PLANS AND SPECIFICATIONS FOR THE SHELTERS OF THIS PC WHICH ARISE DURING PLAN REVIEW AND CONSTRUCTION.

CONSTRUCTION NOTES

1. A DSA-CERTIFIED CLASS 3 (MINIMUM) PROJECT INSPECTOR IS REQUIRED FOR THIS PROJECT.
2. CHANGES TO THE APPROVED DRAWINGS AND SPECIFICATIONS SHALL BE MADE BY ADDENDA OR CONSTRUCTION CHANGE DOCUMENT (CCD) APPROVED BY DSA, AS REQUIRED BY SECTION 4-338, PART 1, TITLE 24, CCR.
3. A "DSA-CERTIFIED" PROJECT INSPECTOR EMPLOYED BY THE DISTRICT (OWNER) AND APPROVED BY DSA SHALL PROVIDE CONTINUOUS INSPECTION OF WORK. THE DUTIES OF THE INSPECTOR ARE DEFINED IN SECTION 4-342, PART 1, TITLE 24, CCR.
4. A DSA ACCEPTED TESTING LABORATORY DIRECTLY EMPLOYED BY THE DISTRICT (OWNER) SHALL CONDUCT ALL THE REQUIRED TESTS AND INSPECTIONS FOR THE PROJECT.
5. THE INTENT OF THESE DRAWINGS AND SPECIFICATIONS ARE THAT ALL THE WORK OF THE ALTERATION, REHABILITATION OR RECONSTRUCTION IS TO BE IN ACCORDANCE WITH TITLE 24, CCR. SHOULD ANY EXISTING CONDITIONS SUCH AS DETERIORATION OR NON-COMPLYING CONSTRUCTION BE DISCOVERED WHICH IS NOT COVERED BY THE CONTRACT DOCUMENTS WHEREIN THE FINISHED WORK WILL NOT COMPLY WITH TITLE 24, CCR, A CONSTRUCTION CHANGE DOCUMENT (CCD), OR A SEPARATE SET OF PLANS AND SPECIFICATIONS, DETAILING AND SPECIFYING THE REQUIRED WORK SHALL BE SUBMITTED TO AND APPROVED BY DSA BEFORE PROCEEDING WITH THE WORK. (SECTION 4-317(c), PART 1, TITLE 24, CCR)
6. GRADING PLANS, DRAINAGE IMPROVEMENTS, ROAD AND ACCESS REQUIREMENTS AND ENVIRONMENTAL HEALTH CONSIDERATIONS SHALL COMPLY WITH ALL LOCAL ORDINANCES

WELDING:

1. ALL WELDING SHALL COMPLY WITH AWS D1.1 SPECIFICATIONS AND SHALL BE DONE BY AWS QUALIFIED WELDERS CERTIFIED FOR THE TYPE OF WELDING TO BE PERFORMED AS REQUIRED BY DSA.
2. ALL WELDING SHALL BE DONE BY GAS METAL ARC PROCESS WITH E70XX ELECTRODES. FLUX CORE ARC WELD SHALL CONFORM TO CHARPY NOTCH TOUGHNESS RATING OF 20 ft-lb @ (0° F).
3. ALL WELDING SHALL BE DONE IN THE SHOP WITH REQUIRED INSPECTION. PRE-APPROVED BY DSA, TO ENSURE PROPER MATERIAL ID AND WELDING.
4. WELD FILLER METAL MANUFACTURER SHALL PROVIDE WRITTEN CERTIFICATION OF COMPLIANCE WITH CODE AND SPECIFICATIONS.

BOLTING:

1. ALL BOLTS SHOWN ON THESE DRAWINGS ARE HOT DIPPED GALVANIZED ASTM F3125 GRADE A325 HIGH STRENGTH BOLTS (UNO), WITH THE NUTS CONFORMING TO HOT DIPPED GALVANIZED ASTM A-563 GRADE DH.
2. HIGH STRENGTH BOLTS SHALL BE VERIFIED AND INSPECTED PER CBC 1705A2.1.
3. BEFORE ERECTING THE FRAME, VERIFY ALL BOLTS AND NUTS ARE CLEAN OF DEBRIS AND BURRS - INCLUDING THE HARDWARE ALREADY FASTENED INSIDE THE MEMBERS. CHASING SOME OF THE BOLTS AND NUTS MAY BE REQUIRED.
4. HARDENED STEEL WASHERS SHALL CONFORM TO ASTM F-436.
5. THE BOLTING INSTALLATION REQUIREMENTS OUTLINED BELOW ARE CRITICAL TO THE STRUCTURE'S DESIGN AND PERFORMANCE. THE INSTALLER IS REQUIRED TO COORDINATE THIS PHASE OF CONSTRUCTION WITH THE SPECIAL BOLTING INSPECTOR AND THE INSPECTOR OF RECORD PRIOR TO THE ERECTION OF THE FRAME BE INSTALLED AND INSPECTED PER THE APPLICABLE VERSION OF AISC'S USING HIGH-STRENGTH BOLTS", CBC 1705A.2.1; AISC 341-16 J7; AISC 360-16 N5.6.

   A) PRETENSIONED JOINTS MUST BE INSTALLED AND INSPECTED TO MEET ONE OF THE FOLLOWING REQUIREMENTS:
      1. TURN-OF-NUT PRETENSIONING: PER SECTION 8.2.1 OF THE *SPECIFICATION FOR STRUCTURAL JOINTS USING HIGH STRENGTH BOLTS*. WASHERS ARE NOT REQUIRED FOR THIS METHOD, THE NUT OR HEAD SHALL BE ROTATED AS SPECIFIED IN TABLE 8.2. THE PART NOT TURNED SHALL BE PREVENTED FROM ROTATING.
      2. CALIBRATED WRENCH: PER THE *SPECIFICATION FOR STRUCTURAL JOINTS USING HIGH STRENGTH BOLTS*. WASHERS ARE REQUIRED (NOT SUPPLIED BY ICON) THESE SHALL BE INSTALLED PER THE INSTALLATION TORQUE DETERMINED IN THE PRE-INSTALLATION VERIFICATION OF THE FASTENER ASSEMBLY PER SECTION
      7. THE PART NOT TURNED SHALL BE PREVENTED FROM ROTATING.
      3. IDENTIFIED ON THE FRAME CONNECTION DETAILS WITH "PT REQUIRED"

   B) ALL OTHER JOINTS MUST BE INSTALLED AND INSPECTED TO MEET THE REQUIREMENTS OF THE SNUG-TIGHTENED JOINTS. SNUG TIGHT CONDITION EXISTS WHEN ALL PLIES IN A CONNECTION HAVE BEEN PULLED INTO FIRM CONTACT BY THE BOLTS IN THE JOINT AND ALL OF THE BOLTS IN THE JOINT HAVE BEEN TIGHTENED SUFFICIENTLY TO PREVENT REMOVAL OF THE NUTS WITHOUT THE USE OF A WRENCH.

FOUNDATIONS:

1. ALLOWABLE SOIL PRESSURES ASSUME CLASS 5 SOIL CLASSIFICATION PER CBC TABLE 1806A, UNLESS NOTED OTHERWISE. PASSIVE PRESSURE IS ASSUMED TO START 12" BELOW TOP OF FOOTING.
2. PER CBC SECTION 1803A.2, GEOTECHNICAL REPORTS ARE NOT REQUIRED FOR ONE-STORY LIGHT-STEEL FRAME BUILDINGS OF TYPE III CONSTRUCTION AND 4,000 SQUARE FOOT OR LESS IN FLOOR AREA AND NOT LOCATED WITHIN EARTHQUAKE FAULT ZONESOR SEISMIC HAZARD ZONES AS SHOWN ON THE MOST RECENT MAPS PUBLISHED BY THE CGS. ALLOWABLE FOUNDATION AND LATERAL SOIL PRESSURE VALUES MAY BE DETERMINED FROM TABLE 1806A.2.
3. FILL AND BACKFILL SHALL BE COMPACTED TO 95% OF MAX. DENSITY IN ACCORDANCE WITH ASTM TEST METHOD D-1557 OR AS RECOMMENDED BY THE GEO-TECH ENGINEER. FLOODING NOT PERMITTED.
4. THE CONTRACTOR SHALL BE RESPONSIBLE FOR ALL SHORING, ETC. NECESSARY TO SUPPORT CUT AND/OR FILL BANKS DURING EXCAVATION, AND FORMING AND PLACEMENT OF CONCRETE.
5. MINIMUM SETBACK FROM TOE OF SLOPE ON AN ASCENDING SLOPE SHALL BE 15 FEET AND MINIMUM SETBACK FROM TOE OF SLOPE ON A DESCENDING SLOPE SHALL BE 40 FEET
6. PER CBC SECTION 1803A.6, GEOHAZARD REPORTS ARE NOT REQUIRED FOR ONE-STORY LIGHT-STEEL FRAME BUILDINGS OF TYPE III CONSTRUCTION AND 4,000 SQUARE FOOT OR LESS IN FLOOR AREA AND NOT LOCATED WITHIN EARTHQUAKE FAULT ZONESOR SEISMIC HAZARD ZONES AS SHOWN ON THE MOST RECENT MAPS PUBLISHED BY THE CGS.
7. GEOHAZRD REPORTS ARE TO COMPLY WITH DSA IR A-4 PER IR-7 SECTION 1.8
8. SITE SPECIFIC GEOTECHNICAL REPORT IS REQUIRED AT THE TIME OF SITE APPLICATION IF USING OTHER THAN CLASS 5 SOIL. PER DSA IR PC-7
9. LATERAL BEARING HAS BEEN INCREASED PER CBC 1806A.3.4 FOR THE 1/2" DEFLECTION & HAS BEEN DESIGNED FOR P-DELTA EFFECTS. NO 1/3 INCREASE HAS BEEN APPLIED.
10. MINIMUM CLEARANCE BETWEEN PIERS SHALL BE 8'-0".

CONCRETE:

1. MIX DESIGN REQUIREMENTS: (NORMAL WEIGHT CONCRETE)

STRENGTH Pc (28 DAYS)	W/C RATIO (NON-AIR ENTRAINED)	W/C RATIO (AIR ENTRAINED)	SLUMP (±1")	UNIT WEIGHT (NORMAL WEIGHT)
5000 PSI	0.44	0.35	3"	150 PCF

2. CONCRETE MIX DESIGN PARAMETERS ARE GOOD FOR EXPOSURE CATEGORIES F0, F1 & F2. THE AIR ENTRAINMENT FOR THESE CATEGORIES SHALL BE AS FOLLOWS: F0=0, F1=4.5, F2=6
3. CHANGES TO THE MIX DESIGN MUST BE APPROVED BY THE ENGINEER OR ARCHITECT OF RECORD AND DSA.
4. AGGREGATES SHALL CONFORM TO THE ASTM C-33 WITH PROVEN SHRINKAGE CHARACTERISTICS OF LESS THAN 0.005. MAX AGGREGATE SIZE = 1".
5. CEMENT SHALL CONFORM TO ASTM C-150 (TYPE V) UNLESS NOTED OTHERWISE ON THE DRAWINGS.
6. CONCRETE SHALL BE MAINTAINED IN A MOIST CONDITION FOR A MINIMUM OF FIVE DAYS AFTER PLACEMENT. ALTERNATE METHODS WILL BE APPROVED IF SATISFACTORY PERFORMANCE CAN BE ASSURED.
7. CONCRETE SHALL NOT FREE FALL MORE THAN FIVE FEET.
8. CONCRETE DURABILITY SHALL BE PER CBC 1904A.1 ACI 318-19, CHAPTER 19.
9. CONCRETE SHALL BE TESTED PER CBC 1803A, TABLE 1705A.3, AND ACI 318-19, SECTION 26.12.
10. NO ADMIXTURE SHALL CONTAIN CALCIUM CHLORIDE.

REINFORCING STEEL:

1. REINFORCING STEEL SHALL BE DEFORMED STEEL CONFORMING TO THE REQUIREMENTS OF ASTM A-615, AS FOLLOWS:
   GR 60: (#4 BARS AND LARGER)
   GR 40: (#3 BARS)
2. DETAILING, FABRICATION, AND ERECTION OF REINFORCING BARS SHALL CONFORM TO THE ACI "MANUAL OF STANDARD PRACTICE FOR DETAILING REINFORCING CONCRETE STRUCTURES."
3. MIN. COVER FOR CAST-IN-PLACE CONCRETE SHALL BE AS FOLLOWS:
   A. CAST AGAINST EARTH .....3"
   B. CAST AGAINST FORM BELOW GRADE .....2"
   C. FORMED SLABS (#11 BAR & SMALLER).....3/4"
   D. SLABS ON GRADE (FROM TOP OF SLAB).....1"
4. BARS SHALL BE CLEAN OF RUST, GREASE OR OTHER MATERIAL LIKELY TO IMPAIR BOND. BENDS SHALL BE MADE COLD.
5. REINFORCING SHALL BE LAP SPLICED PER ACI 318-19, SECTION 25.5.
6. PRIOR TO PLACING OF CONCRETE, REINFORCING STEEL AND EMBEDDED ITEMS SHALL BE WELL SECURED IN POSITION.
7. WELDING OF REINFORCING IS NOT ALLOWED.
8. REINFORCING STEEL SHALL BE INSPECTED PER CBC 1705A.3.

POWDER-COAT FINISH SYSTEM:

ALL BUILDINGS THAT HAVE A POWDER-COATED FINISH SHALL MEET THE FOLLOWING SPECIFICATIONS:

1. THE STEEL FRAME (HSS SECTIONS, COLD FORMED & PLATE STEEL) SHALL BE SHOT-BLASTED TO A NEAR WHITE CONDITION PER SSPC-10 SPECIFICATIONS.
2. THE STEEL SHALL BE WASHED IN A ZINC PHOSPHATE IN AN MINIMUM THREE STAGE ELECTRO DEPOSITION PRE-TREATEMENT PROCESS.
3. IMMEDIATELY FOLLOWING PRE-TREATMENT THE STEEL SHALL BE TOTALLY COATED IN AN EPOXY PRIMER TO A UNIFORM THICKNESS OF A MINIMUM OF 0.7 TO 0.9 MILS. THE E-COATING SHALL PROVIDE A MINIMUM OF 1000 HOURS OF SALT SPRAY CORROSION PROTECTION TO THE STEEL.
4. THE STEEL SHALL THEN HAVE A TGIC POLYESTER COLOR COAT APPLIED OVER THE E-COATED SURFACE.
5. THE FINISH THICKNESS OF THESE APPLICATIONS SHALL BE A MINIMUM OF 8 TO 12 MILS.
6. ALL CARBON STEEL MEMBERS (COLUMNS, BEAMS, PLATES & COLD FORMED STEEL ETC.) NOT POWDER-COATED SHALL BE PAINTED WITH PRIME COAT PER THE "AISC CODE OF STANDARD PRACTICE" AND THE "AISC SPECIFICATION SECTION M3" UNLESS NOTED OTHERWISE).

ICON STD	R0/DSA-PC
DRAWN BY	JD
DATE	3/21/202
REV	
REV DATE	

JRMA ARCHITECTS ENGINEERS
2700 SATURN ST.I BREA, CA 92821
T.714.524.1870 F.714.524.1875
WWW.JRMA.COM

REGISTERED PROFESSIONAL ENGINEER
STEVEN D. UNGER
No. S3317
CIVIL
STATE OF CALIFORNIA

Aug 31, 2023

APPROVED
DIV. OF THE STATE ARCHITECT
APP: 04-122188 PC
REVIEWED FOR
SS ☑ FLS ☑ ACS ☑ CG ☐
DATE: 09/21/2023

GENERAL INFO

ICON Shelter Systems Inc
DISTINCTIVE STEEL SHELTERS
WWW.ICONSHELTERS.COM
COPYRIGHT 2004, ICON SHELTER SYSTEMS, INC.
1455 LINCOLN AVE
HOLLAND MI, 49423
616.396.0919
800.748.0985
616.396.0944 FX

PRE-CHECK (PC) DOCUMENT
Code: 2022 CBC
A separate project application for construction is required.

LS1.1

PRINTED ON :

IDENTIFICATION STAMP
DIV. OF THE STATE ARCHITECT
APP: 02-123848 INC: 01
REVIEWED FOR
SS ☑ FLS ☑ ACS ☑
DATE: 05/21/2026

LPA
ARCHITECTURE ENGINEERING INTERIOR DESIGN
LANDSCAPE ARCHITECTURE PLANNING
949-261-1001 Office
LPADesignStudios.com
5301 California Avenue, Suite 100
Irvine, California 92617

This document and all other project documents, ideas, aesthetics and designs incorporated therein are instruments of service. All project documents are copyright protected, are the property of LPA, Inc. (LPA) and cannot be lawfully used in whole or in part for any project or purpose except as set forth in the contractual agreement between LPA and its Client. The unauthorized disclosure and/or use of the project documents (including the creation of derivative works), may give rise to liability for copyright infringement, unlawful disclosure, use or misappropriation of property rights held by LPA. The unauthorized use of the project documents will give rise to the recovery of monetary losses and damages including attorney fees and costs for which the unauthorized user will be held liable.
Project documents describe the design intent of the work and are not a representation of as-built or existing conditions. LPA is not responsible for any discrepancies between the project documents and the existing conditions.

© LPA, Inc.

ELKHORN ELEMENTARY SCHOOL
CAMPUS MODERNIZATION INCREMENT 1

10505 DAVIS ROAD, STOCKTON, CA 95290

Developed for
LODI UNIFIED SCHOOL DISTRICT

Revision	Date

Submittal	Date
100% SCHEMATIC DESIGN	08/29/2025
DSA SUBMITTAL	12/18/2025

Job Number	3194201
Checked By	AW, EW
Scale	AS NOTED

GENERAL INFO

1PC1.10

DSA 103-22: LISTING OF STRUCTURAL TESTS & SPECIAL INSPECTIONS, 2022 CBC

Application Number:	School Name:	School District:
04-122188	PC Update	PC Update
DSA File Number:	Increment Number:	Date Created: 2023-04-19 08:36:32

2022 CBC

IMPORTANT: This form is only a summary list of structural tests and some of the special inspections required for the project. Generally, the structural tests and special inspections noted on this form are those that will be performed by the Geotechnical Engineer of Record, Laboratory of Record, or Special Inspector. The actual complete test and inspection program must be performed as detailed on the DSA approved documents. The appendix at the bottom of this form identifies work NOT subject to DSA requirements for special inspection or structural testing. The project inspector is responsible for providing inspection of all facets of construction, including but not limited to, special inspections not listed on this form such as structural wood framing, high-load wood diaphragms, cold-formed steel framing, anchorage of non-structural components, etc., per Title 24, Part 2, Chapter 17A (2022 CBC).

**NOTE: Undefined section and table references found in this document are from the CBC, or California Building Code.

KEY TO COLUMNS

1. TYPE	2. PERFORMED BY
Continuous – Indicates that a continuous special inspection is required	GE (Geotechnical Engineer) – Indicates that the special inspection shall be performed by a registered geotechnical engineer or his or her authorized representative.
Periodic – Indicates that a periodic special inspection is required	LOR (Laboratory of Record) – Indicates that the test or special inspection shall be performed by a testing laboratory accepted in the DSA Laboratory Evaluation and Acceptance (LEA) Program. See CAC Section 4-335.
Test – Indicates that a test is required	PI (Project Inspector) – Indicates that the special inspection may be performed by a project inspector when specifically approved by DSA.
	SI (Special Inspection) – Indicates that the special inspection shall be performed by an appropriately qualified/approved special inspector.

DSA 103-22: LISTING OF STRUCTURAL TESTS & SPECIAL INSPECTIONS (SOILS), 2022 CBC

Table 1705A.6, Table 1705A.7, Table 1705A.8

Application Number:	School Name:	School District:
04-122188	PC Update	PC Update
DSA File Number:	Increment Number:	Date Created: 2023-04-19 08:36:32

Geotechnical Reports: Project has a geotechnical report, or CDs indicate soils special inspection is required by GE

	S1. GENERAL:			
	Test or Special Inspection	Type	Performed By	Code References and Notes
☑	a. Verify that: • Site has been prepared properly prior to placement of controlled fill and/or excavations for foundations. • Foundation excavations are extended to proper depth and have reached proper material. • Materials below footings are adequate to achieve the design bearing capacity.	Periodic	GE*	* By geotechnical engineer or his or her qualified representative. (See Appendix (end of this form) form for exemptions.)

	S2. SOIL COMPACTION AND FILL:			
	Test or Special Inspection	Type	Performed By	Code References and Notes
☐	a. Perform classification and testing of fill materials.	Test	LOR*	* Under the supervision of the geotechnical engineer.
☑	b. Verify use of proper materials, densities and inspect lift thicknesses, placement and compaction during placement of fill.	Continuous	GE*	* By geotechnical engineer or his or her qualified representative. (Refer to specific items identified in the Appendix (end of this form) form for exemptions where soils SI and testing may be conducted under the supervision of a geotechnical engineer or LOR's engineering manager. In such cases, the LOR's form DSA 291 shall satisfy the soil SI and test reporting requirements for the exempt items.)
☑	c. Compaction testing.	Test	LOR*	* Under the supervision of the geotechnical engineer. (Refer to specific items identified in the Appendix (end of this form) for exemptions where soils testing may be conducted under the supervision of a geotechnical engineer or LOR's engineering manager. In such cases, the LOR's form DSA 291 shall satisfy the soil test reporting requirements for the exempt items.)

DSA 103-22: LISTING OF STRUCTURAL TESTS & SPECIAL INSPECTIONS (SOILS), 2022 CBC

Table 1705A.6, Table 1705A.7, Table 1705A.8

Application Number:	School Name:	School District:
04-122188	PC Update	PC Update
DSA File Number:	Increment Number:	Date Created: 2023-04-19 08:36:32

	S3. DRIVEN DEEP FOUNDATIONS (PILES):			
	Test or Special Inspection	Type	Performed By	Code References and Notes
☐	a. Verify pile materials, sizes and lengths comply with the requirements.	Continuous	GE*	* By geotechnical engineer or his or her qualified representative.
☐	b. Determine capacities of test piles and conduct additional load tests as required.	Test	LOR*	* Under the supervision of the geotechnical engineer.
☐	c. Inspect driving operations and maintain complete and accurate records for each pile.	Continuous	GE*	* By geotechnical engineer or his or her qualified representative.
☐	d. Verify locations of piles and their plumbness, confirm type and size of hammer, record number of blows per foot of penetration, determine required penetrations to achieve design capacity, record tip and butt elevations and record any pile damage.	Continuous	GE*	* By geotechnical engineer or his or her qualified representative.
☐	e. Steel piles.	Provide tests and inspections per STEEL section below.		
☐	f. Concrete piles and concrete filled piles.	Provide tests and inspections per CONCRETE section below.		
☐	g. For specialty piles, perform additional inspections as determined by the registered design professional in responsible charge.	*	*	* As defined on drawings or specifications.

	S4. CAST-IN-PLACE DEEP FOUNDATIONS (PIERS):			
	Test or Special Inspection	Type	Performed By	Code References and Note
☐	a. Inspect drilling operations and maintain complete and accurate records for each pier.	Continuous	GE*	* By geotechnical engineer or his or her qualified representative. (See Appendix (end of this form) for exemptions.)

DSA 103-22: LISTING OF STRUCTURAL TESTS & SPECIAL INSPECTIONS (SOILS), 2022 CBC

Table 1705A.6, Table 1705A.7, Table 1705A.8

Application Number:	School Name:	School District:
04-122188	PC Update	PC Update
DSA File Number:	Increment Number:	Date Created: 2023-04-19 08:36:32

	S5. RETAINING WALLS:			
	Test or Special Inspection	Type	Performed By	Code References and Notes
☐	a. Placement, compaction and inspection of backfill.	Continuous	GE*	1705A.6.1. * By geotechnical engineer or his or her qualified representative. (See section S2 above).
☐	b. Placement of soil reinforcement and/or drainage devices.	Continuous	GE*	* By geotechnical engineer or his or her qualified representative.
☐	c. Segmental retaining walls; inspect placement of units, dowels, connectors, etc.	Continuous	GE*	* By geotechnical engineer or his or her qualified representative. See DSA IR 18-2.
☐	d. Concrete retaining walls.	Provide tests and inspections per CONCRETE section below.		
☐	e. Masonry retaining walls.	Provide tests and inspections per MASONRY section below.		

DSA 103-22: LISTING OF STRUCTURAL TESTS & SPECIAL INSPECTIONS (SOILS), 2022 CBC

Table 1705A.6, Table 1705A.7, Table 1705A.8

Application Number:	School Name:	School District:
04-122188	PC Update	PC Update
DSA File Number:	Increment Number:	Date Created: 2023-04-19 08:36:32

	S6. OTHER SOILS:			
	Test or Special Inspection	Type	Performed By	Code References and Notes
☐	a. Soil Improvements	Test	GE*	Submit a comprehensive report documenting final soil improvements constructed, construction observation and the results of the confirmation testing and analysis to CGS (California Geological Survey) for final acceptance. * By geotechnical engineer or his or her qualified representative.
☐	b. Inspection of Soil Improvements	Continuous	GE*	* By geotechnical engineer or his or her qualified representative.
☐	c.			

DSA 103-22: LISTING OF STRUCTURAL TESTS & SPECIAL INSPECTIONS (CONCRETE), 2022 CBC

Table 1705A.3; ACI 318-19 Sections 26.12 & 26.13

Application Number:	School Name:	School District:
04-122188	PC Update	PC Update
DSA File Number:	Increment Number:	Date Created: 2023-04-19 08:36:32

	C1. CAST-IN-PLACE CONCRETE			
	Test or Special Inspection	Type	Performed By	Code References and Notes
☑	a. Verify use of required design mix.	Periodic	SI	Table 1705A.3 Item 5, 1910A.1.
☑	b. Identify, sample, and test reinforcing steel.	Test	LOR	1910A.2; ACI 318-19 Ch.20 and Section 26.6.1.2; DSA IR 17-10. (See Appendix (end of this form) for exemptions.)
☑	c. During concrete placement, fabricate specimens for strength tests, perform slump and air content tests, and determine the temperature of the concrete.	Test	LOR	Table 1705A.3 Item 6; ACI 318-19 Sections 26.5 & 26.12.
☑	d. Test concrete (f'_c).	Test	LOR	1905A.1.17; ACI 318-19 Section 26.12.
☐	e. Batch plant inspection:	See Notes	SI	Default of 'Continuous' per 1705A.3.3. If approved by DSA, batch plant inspection may be reduced to 'Periodic' subject to requirements in Section 1705A.3.3.1, or eliminated per 1705A.3.3.2. See IR 17-13. (See Appendix (end of this form) for exemptions.)
☐	f. Welding of reinforcing steel.	Provide special inspection per STEEL, Category S/A4(d) & (e) and/or S/A5(g) & (h) below.		

	C2. PRESTRESSED / POST-TENSIONED CONCRETE (IN ADDITION TO SECTION C1):			
	Test or Special Inspection	Type	Performed By	Code References and Notes
☐	a. Sample and test prestressing tendons and anchorages.	Test	LOR	1705A.3.4, 1910A.3
☐	b. Inspect placement of prestressing tendons.	Periodic	SI	1705A.3.4, Table 1705A.3 Items 1 & 9.

DSA 103-22: LISTING OF STRUCTURAL TESTS & SPECIAL INSPECTIONS (CONCRETE), 2022 CBC

Table 1705A.3; ACI 318-19 Sections 26.12 & 26.13

Application Number:	School Name:	School District:
04-122188	PC Update	PC Update
DSA File Number:	Increment Number:	Date Created: 2023-04-19 08:36:32

	Test or Special Inspection	Type	Performed By	Code References and Notes
☐	c. Verify in-situ concrete strength prior to stressing of post-tensioning tendons.	Periodic	SI	Table 1705A.3 Item 13. Special inspector to verify specified concrete strength test prior to stressing.
☐	d. Inspect application of post-tensioning or prestressing forces and grouting of bonded prestressing tendons.	Continuous	SI	1705A.3.4, Table 1705A.3 Item 9; ACI 318-14 Section 26.13

	C3. PRECAST CONCRETE (IN ADDITION TO SECTION C1):			
	Test or Special Inspection	Type	Performed By	Code References and Notes
☐	a. Inspect fabrication of precast concrete members.	Continuous	SI	ACI 318-19 Section 26.13.
☐	b. Inspect erection of precast concrete members.	Periodic	SI*	Table 1705A.3 Item 10. * May be performed by PI when specifically approved by DSA.
☐	c. For precast concrete diaphragm connections or reinforcement at joints classified as moderate or high deformability elements (MDE or HDE) in structures assigned to Seismic Design Category D, E or F, inspect such connections and reinforcement in the field for: 1. Installation of the embedded parts 2. Completion of the continuity of reinforcement across joints. 3. Completion of connections in the field.	Continuous	SI	Table 1705A.3; ACI 318-19 Section 26.13.1.3; ACI 550.5
☐	d. Inspect installation tolerances of precast concrete diaphragm connections for compliance with ACI 550.5.	Periodic	SI	Table 1705A.3; ACI 318-19 Section 26.13.1.3; ACI 550.5

	C4. SHOTCRETE (IN ADDITION TO SECTION C1):			
	Test or Special Inspection	Type	Performed By	Code References and Notes
☐	a. Inspect shotcrete placement for proper application techniques.	Continuous	SI	1705A.3.9, Table 1705A.3 Item 7, 1908A.1, 1908A.2, 1908A.3. See ACI 506.2-13 Section 3.4, ACI 506R-16.
☐	b. Sample and test shotcrete (f'_c).	Test	LOR	1908A.2, 1705A.3.9

	C5. POST-INSTALLED ANCHORS:			
	Test or Special Inspection	Type	Performed By	Code References and Notes
☐	a. Inspect installation of post-installed anchors	See Notes	SI*	1617A.1.19, Table 1705A.3 Item 4a (Continuous) & 4b (Periodic), 1705A.3.8 (See Appendix (end of this form) for exemptions). ACI 318-14 Sections 17.8 & 26.13. * May be performed by the project inspector when specifically approved by DSA.
☐	b. Test post-installed anchors.	Test	LOR	1910A.5. (See Appendix (end of this form) for exemptions.)

	C6. OTHER CONCRETE:			
	Test or Special Inspection	Type	Performed By	Code References and Notes
☐	a.			

DSA 103-22: LISTING OF STRUCTURAL TESTS & SPECIAL INSPECTIONS (STEEL AND ALUMNINUM), 2022 CBC

1705A.2.1, Table 1705A.2.1; AISC 303-16, AISC 341-16, AISC 358-16, AISC 360-16; AISI S100-20; RCSC 2014; AWS D1.1, AWS D1.2, AWS D1.3, AWS D1.4, AWS D1.8

Application Number:	School Name:	School District:
04-122188	PC Update	PC Update
DSA File Number:	Increment Number:	Date Created: 2023-04-19 08:36:32

	S/A1. STRUCTURAL STEEL, COLD-FORMED STEEL AND ALUMINUM USED FOR STRUCTURAL PURPOSES			
	Test or Special Inspection	Type	Performed By	Code References and Notes
☑	a. Verify identification of all materials and: • Mill certificates indicate material properties that comply with requirements. • Material sizes, types and grades comply with requirements.	Periodic	*	Table 1705A.2.1 Item 3a–3c. 2202A.1; AISI S100-20 Section A3.1 & A3.2; AISI S240-20 Section A3 & A5, AISI S220-20 Sections A4 & A6. * By special inspector or qualified technician when performed off-site.
☑	b. Test unidentified materials	Test	LOR	2202A.1.
☑	c. Examine seam welds of HSS shapes	Periodic	SI	DSA IR 17-3.
☑	d. Verify and document steel fabrication per DSA-approved construction documents.	Periodic	SI	Not applicable to cold-formed steel light-frame construction, except for trusses (1705A.2.4).
☐	e. Buckling restrained braces.	Test	LOR	Testing and special inspections in accordance with IR 22-4.

	S/A2. HIGH-STRENGTH BOLTS:			
	Test or Special Inspection	Type	Performed By	Code References and Notes
☑	a. Verify identification markings and manufacturer's certificates of compliance conform to ASTM standards specified in the DSA-approved documents.	Periodic	SI	Table 1705A.2.1 Items 1a & 1b. 2202A.1; AISC 360-16 Section A3.3, J3.1, and N3.2; RCSC 2014 Section 1.5 & 2.1; DSA IR 17-8 & DSA IR 17-9.
☑	b. Test high-strength bolts, nuts and washers.	Test	LOR	Table 1705A.2.1 Item 1c, 2213A.1; RCSC 2014 Section 7.2; DSA IR 17-8.
☑	c. Bearing-type ("snug tight") connections.	Periodic	SI	Table 1705A.2.1 Item 2a, 1705A.2.6, 2204A.2; AISC 360-16 J3.1, J3.2, M2.5 & N5.6; RCSC 2014 Section 9.1; DSA IR 17-9.
☑	d. Pretensioned and slip-critical connections.	*	SI	Table 1705A.2.1 Items 2b & 2c, 1705A.2.6, 2204A.2; AISC 360-16 J3.1, J3.2, M2.5 & N5.6; RCSC 2014 Sections 9.2 & 9.3; DSA IR 17-9. **"Continuous" or "Periodic" depends on the tightening method used.

PRE-CHECK (PC) DOCUMENT
Code: 2022 CBC
A separate project application for construction is required.

PRINTED ON :

IDENTIFICATION STAMP
DIV. OF THE STATE ARCHITECT
APP: 02-123848 INC: 01
REVIEWED FOR
SS ☑ FLS ☑ ACS ☑
DATE: 05/21/2026

LPA
ARCHITECTURE ENGINEERING INTERIOR DESIGN
LANDSCAPE ARCHITECTURE PLANNING

949-261-1001 Office
LPADesignStudios.com
5301 California Avenue, Suite 100
Irvine, California 92617

ICON STD	RO/DSA-PC
DRAWN BY	JD
DATE	3/21/202
REV	
REV DATE	

JRMA ARCHITECTS ENGINEERS
2700 SATURN ST | BREA, CA 92821
T. 714.524.1870 | F. 714.524.1875
WWW.JRMA.COM

Aug 31, 2023

APPROVED
DIV. OF THE STATE ARCHITECT
APP: 04-122188 PC
REVIEWED FOR
SS ☑ FLS ☑ ACS ☑ CG ☐
DATE: 09/21/2023

DSA 103

This document and all other project documents, ideas, aesthetics and designs incorporated therein are instruments of service. All project documents are copyright protected, are the property of LPA, Inc. (LPA) and cannot be lawfully used in whole or in part for any project or purpose except as set forth in the contractual agreement between LPA and its Client. The unauthorized disclosure and/or use of the project documents (including the creation of derivative works), may give rise to liability for copyright infringement, unlawful disclosure, use or misappropriation of property rights held by LPA. The unauthorized use of the project documents will give rise to the recovery of monetary losses and damages including attorney fees and costs for which the unauthorized user will be held liable.
Project documents describe the design intent of the work and are not a representation of as-built or existing conditions. LPA is not responsible for any discrepancies between the project documents and the existing conditions.

© LPA, Inc.

ELKHORN ELEMENTARY SCHOOL
CAMPUS MODERNIZATION INCREMENT 1

10505 DAVIS ROAD, STOCKTON, CA 95290

Developed for
LODI UNIFIED SCHOOL DISTRICT

Revision	Date

Submittal	Date
100% SCHEMATIC DESIGN	08/29/2025
DSA SUBMITTAL	12/18/2025

ICON Shelter Systems Inc
DISTINCTIVE STEEL SHELTERS
WWW.ICONSHELTERS.COM
COPYRIGHT 2006. ICON SHELTER SYSTEMS, INC.
1455 LINCOLN AVE
HOLLAND MI, 49423
616.396.0919
800.748.0985
616.396.0944 FX

Job Number	3194201
Checked By	AW, EW
Scale	AS NOTED

LS1.2

DSA 103

1PC1.20

DSA 103-22: LISTING OF STRUCTURAL TESTS & SPECIAL INSPECTIONS (STEEL AND ALUMNINUM), 2022 CBC

1705A.2.1, Table 1705A.2.1; AISC 303-16, AISC 341-16, AISC 358-16, AISC 360-16; AISI S100-20; RCSC 2014; AWS D1.1, AWS D1.2, AWS D1.3, AWS D1.4, AWS D1.8

Application Number: 04-122188
DSA File Number:
School Name: PC Update
Increment Number:
School District: PC Update
Date Created: 2023-04-19 08:36:32

	S/A3. WELDING:			
	Test or Special Inspection	Type	Performed By	Code References and Notes
☑	a. Verify weld filler material identification markings per AWS designation listed on the DSA-approved documents and the WPS.	Periodic	SI	1705A.2.5, Table 1705A.2.1 Items 4 & 5; AWS D1.1 and AWS D1.8 for structural steel; AWS D1.2 for Aluminum; AWS D1.3 for cold-formed steel; AWS D1.4 for reinforcing steel; DSA IR 17-3.
☑	b. Verify weld filler material manufacturer's certificate of compliance.	Periodic	SI	DSA IR 17-3.
☑	c. Verify WPS, welder qualifications and equipment.	Periodic	SI	DSA IR 17-3.

	S/A4. SHOP WELDING (IN ADDITION TO SECTION S/A3):			
	Test or Special Inspection	Type	Performed By	Code References and Notes
☑	a. Inspect groove welds, multi-pass fillet welds, single pass fillet welds > 5/16", plug and slot welds.	Continuous	SI	Table 1705A.2.1 Items 5a.1–4; AISC 360-16 (and AISC 341-16 as applicable); DSA IR 17-3.
☑	b. Inspect single-pass fillet welds ≤ 5/16", floor and roof deck welds.	Periodic	SI	1705A.2.2, Table 1705A.2.1 Items 5a.5 & 5a.6; AISC 360-16 (and AISC 341-16 as applicable); DSA IR 17-3.
☐	c. Inspect welding of stairs and railing systems.	Periodic	SI	1705A.2.1; AISC 360-16 (and AISC 341-16 as applicable); AWS D1.1 & D1.3; DSA IR 17-3.
☐	d. Verification of reinforcing steel weldability other than ASTM A706.	Periodic	SI	1705A.3.1; AWS D1.4; DSA IR 17-3. Verify carbon equivalent reported on mill certificates.
☐	e. Inspect welding of reinforcing steel.	Continuous	SI	Table 1705A.2.1 Item 5b, 1705A.3.1, Table 1705A.3 Item 2, 1903A.8; AWS D1.4; DSA IR 17-3.

DSA 103-22: LISTING OF STRUCTURAL TESTS & SPECIAL INSPECTIONS (STEEL AND ALUMNINUM), 2022 CBC

1705A.2.1, Table 1705A.2.1; AISC 303-16, AISC 341-16, AISC 358-16, AISC 360-16; AISI S100-20; RCSC 2014; AWS D1.1, AWS D1.2, AWS D1.3, AWS D1.4, AWS D1.8

Application Number: 04-122188
DSA File Number:
School Name: PC Update
Increment Number:
School District: PC Update
Date Created: 2023-04-19 08:36:32

	Test or Special Inspection	Type	Performed By	Code References and Notes
	S/A5. FIELD WELDING (IN ADDITION TO SECTION S/A3):			
	Test or Special Inspection	Type	Performed By	Code References and Notes
☐	a. Inspect groove welds, multi-pass fillet welds, single pass fillet welds > 5/16", plug and slot welds.	Continuous	SI	Table 1705A.2.1 Items 5a.1–4; AISC 360-16 (AISC 341-16 as applicable); DSA IR 17-3.
☐	b. Inspect single-pass fillet welds ≤ 5/16".	Periodic	SI	Table 1705A.2.1 Item 5a.5; AISC 360-16 (AISC 341-16 as applicable); DSA IR 17-3.
☐	c. Inspect end-welded studs (ASTM A-108) installation (including bend test).	Periodic	SI	2213A.2; AISC 360-16 (AISC 341-16 as applicable); AWS D1.1; DSA IR 17-3.
☐	d. Inspect floor and roof deck welds.	Periodic	SI	1705A.2.2, Table 1705A.2.1 Item 5a.6; AISC 360-16 (AISC 341-16 as applicable); AWS D1.3; DSA IR 17-3.
☐	e. Inspect welding of structural cold-formed steel.	Periodic	SI*	1705A.2.5; AWS D1.3; DSA IR 17-3. The quality control provisions of AISI S240-20 Chapter D shall also apply. * May be performed by the project inspector when specifically approved by DSA.
☐	f. Inspect welding of stairs and railing systems.	Periodic	SI*	1705A.2.1; AISC 360-16 (AISC 341-16 as applicable); AWS D1.1 & D1.3; DSA IR 17-3. * May be performed by the project inspector when specifically approved by DSA.
☐	g. Verification of reinforcing steel weldability.	Periodic	SI	1705A.3.1; AWS D1.4; DSA IR 17-3. Verify carbon equivalent reported on mill certificates.
☐	h. Inspect welding of reinforcing steel.	Continuous	SI	Table 1705A.2.1 Item 5b, 1705A.3.1, Table 1705A.3 Item 2, 1903A.8; AWS D1.4; DSA IR 17-3.

DSA 103-22: LISTING OF STRUCTURAL TESTS & SPECIAL INSPECTIONS (STEEL AND ALUMNINUM), 2022 CBC

1705A.2.1, Table 1705A.2.1; AISC 303-16, AISC 341-16, AISC 358-16, AISC 360-16; AISI S100-20; RCSC 2014; AWS D1.1, AWS D1.2, AWS D1.3, AWS D1.4, AWS D1.8

Application Number: 04-122188
DSA File Number:
School Name: PC Update
Increment Number:
School District: PC Update
Date Created: 2023-04-19 08:36:32

	S/A6. NONDESTRUCTIVE TESTING:			
	Test or Special Inspection	Type	Performed By	Code References and Notes
☐	a. Ultrasonic	Test	LOR	1705A.2.1, 1705A.2.5; AISC 341-16 J6.2, AISC 360-16 N5.5; AWS D1.1, AWS D1.8; DSA IR 17-2.
☐	b. Magnetic Particle	Test	LOR	1705A.2.1, 1705A.2.5; AISC 341-16 J6.2, AISC 360-16 N5.5; AWS D1.1, AWS D1.8; DSA IR 17-2.
☐	c.	Test	LOR	

	S/A7. STEEL JOISTS AND TRUSSES:			
	Test or Special Inspection	Type	Performed By	Code References and Notes
☐	a. Verify size, type and grade for all chord and web members as well as connectors and weld filler material; verify joist profile, dimensions and camber (if applicable); verify all weld locations, lengths and profiles; mark or tag each joist.	Continuous	SI	1705A.2.3, Table 1705A.2.3; AWS D1.1; DSA IR 22-3 for steel joists only. 1705A.2.4; AWS D1.3 for cold-formed steel trusses.

DSA 103-22: LISTING OF STRUCTURAL TESTS & SPECIAL INSPECTIONS (STEEL AND ALUMNINUM), 2022 CBC

1705A.2.1, Table 1705A.2.1; AISC 303-16, AISC 341-16, AISC 358-16, AISC 360-16; AISI S100-20; RCSC 2014; AWS D1.1, AWS D1.2, AWS D1.3, AWS D1.4, AWS D1.8

Application Number: 04-122188
DSA File Number:
School Name: PC Update
Increment Number:
School District: PC Update
Date Created: 2023-04-19 08:36:32

	Test or Special Inspection	Type	Performed By	Code References and Notes
	S/A8. SPRAYED FIRE-RESISTANT MATERIALS:			
	Test or Special Inspection	Type	Performed By	Code References and Notes
☐	a. Examine structural steel surface conditions, inspect application, take samples, measure thickness and verify compliance of all aspects of application with DSA-approved documents.	Periodic	SI	1705A.15, 1705A.1, 1705A.2, 1705A.3, 1705A.4.
☐	b. Test density.	Test	LOR	1705A.15.1, 1705A.15.5, ASTM E736
☐	c. Bond strength adhesion/cohesion.	Test	LOR	1705A.15.1, 1705A.15.4, ASTM E605

	S/A9. ANCHOR BOLTS AND ANCHOR RODS:			
	Test or Special Inspection	Type	Performed By	Code References and Notes
☑	a. Anchor Bolts and Anchor Rods	Test	LOR	Sample and test anchor bolts and anchor rods not readily identifiable per procedures noted in DSA IR 17-11.
☐	b. Threaded rod not used for foundation anchorage.	Test	LOR	Sample and test threaded rods not readily identifiable per procedures noted in DSA IR 17-11.

	S/A10. STORAGE RACK SYSTEMS:			
	Test or Special Inspection	Type	Performed By	Code References and Notes
☐	a. Materials used, to verify compliance with one or more of the material test reports in accordance with the approved construction documents.	Periodic	SI	Table 1705A.13.7
☐	b. Fabricated storage rack elements.	Periodic	SI	1704A.2.5; Table 1705A.13.7

DSA 103-22: LISTING OF STRUCTURAL TESTS & SPECIAL INSPECTIONS (STEEL AND ALUMNINUM), 2022 CBC

1705A.2.1, Table 1705A.2.1; AISC 303-16, AISC 341-16, AISC 358-16, AISC 360-16; AISI S100-20; RCSC 2014; AWS D1.1, AWS D1.2, AWS D1.3, AWS D1.4, AWS D1.8

Application Number: 04-122188
DSA File Number:
School Name: PC Update
Increment Number:
School District: PC Update
Date Created: 2023-04-19 08:36:32

	Test or Special Inspection	Type	Performed By	Code References and Notes
☐	c. Storage rack anchorage installation.	Periodic	SI	ANSI/MH16.1 Section 7.3.2; Table 1705A.13.7
☐	d. Completed storage rack system to indicate compliance with the approved construction documents.	Periodic	SI*	Table 1705A.13.7; * May be preformed by the project inspector when specifically approved by DSA.

	S/A11. Other Steel			
	Test or Special Inspection	Type	Performed By	Code References and Notes
☐	a.			

DSA 103-22: LISTING OF STRUCTURAL TESTS & SPECIAL INSPECTIONS (OTHER), 2022 CBC

Application Number: 04-122188
DSA File Number:
School Name: PC Update
Increment Number:
School District: PC Update
Date Created: 2023-04-19 08:36:32

	X1. OTHER:			
	Test or Special Inspection	Type	Performed By	Code References and Notes
☐	a. Load test for identified product(s):	Test	LOR	1709A.2, 1709A.3. Testing is not required for: 1) a product with a valid evaluation service report per DSA IR A-5, or 2) a product that can be justified by structural calculation.
☐	b. Installation torque for non-HS bolts	Continuous	SI*	Applicable to communication towers identified as Essential Service Facility Projects (ESFP). Calibrated wrench use required, verified by SI during installation. DSA Policy PL 18-01: Communication Towers, Poles and Buildings Utilized by State Agencies for Essential Services Communications.*EXCEPTION: Non-ESFP may use PI without need for notification to DSA.
☐	c.			

Appendix: Work Exempt from DSA Requirements for Structural Tests / Special Inspections

Application Number: 04-122188
DSA File Number:
School Name: PC Update
Increment Number:
School District: PC Update
Date Created: 2023-04-19 08:36:32

Exempt items given in DSA IR A-22 or the 2019 CBC (including DSA amendments) and those items identified below with a check mark by the design professional are NOT subject to DSA requirements for the structural tests / special inspections noted. Items marked as exempt shall be identified on the approved construction documents. The project inspector shall verify all construction complies with the approved construction documents.

	SOILS:
☐	1. Deep foundations acting as a cantilever footing with a design based on minimum allowable pressures per CBC Table 1806A.2 and without a geotechnical report for the following cases: A) free standing sign or scoreboard, B) cell or antenna towers and poles less than 35'-0" tall (e.g., lighting poles, flag poles, poles supporting open mesh fences, etc.), C) single-story structure with dead load less than 5 psf (e.g., open fabric shade structure), or D) covered walkway structure with an apex height less than 10'-0" above adjacent grade.
☐	2. Shallow foundations, etc. are exempt from special inspections and testing by a Geotechnical Engineer for the following cases: A) buildings without a geotechnical report and meeting the exception item #1 criteria in CBC Section 1803A.2 supported by native soil (any excavation depth) or fill soil (not exceeding 12" depth per CBC Section 1804A.6), B) soil scarification/recompaction not exceeding 12" depth, C) native or fill soil supporting exterior non-structural flatwork (e.g., sidewalks, site concrete ramps, site stairs, parking lots, driveways, etc.), D) unpaved landscaping and playground areas, or E) utility trench backfill.

	CONCRETE/MASONRY:
☐	1. Post-installed anchors for the following: A) exempt non-structural components (e.g., mechanical, electrical, plumbing equipment - see item 7 for "Welding" in the Appendix below) given in CBC Section 1617A.1.18 (which replaces ASCE 7-16, Section 13.1.4) or B) interior nonstructural wall partitions meeting criteria listed in exempt item 3 for "Welding" in the Appendix below
☐	2. Concrete batch plant inspection is not required for items given in CBC Section 1705A.3.3.2 subject to the requirements and limitations in that section.
☐	3. Non-bearing non-shear masonry walls may be exempt from certain DSA masonry testing and special inspection items as allowed per DSA IR 21-1. Refer to construction documents for specific exemptions accordingly for each applicable wall condition.
☐	4. Epoxy shear dowels in site flatwork and/or other non-structural concrete.

Appendix: Work Exempt from DSA Requirements for Structural Tests / Special Inspections

Application Number: 04-122188
DSA File Number:
School Name: PC Update
Increment Number:
School District: PC Update
Date Created: 2023-04-19 08:36:32

	CONCRETE/MASONRY:
☐	5. Testing of reinforcing bars is not required for items given in CBC Section 1910A.2 subject to the requirements and limitations in that section.

	WELDING:
☐	1. Solid-clad and open-mesh fences, gates with maximum leaf span of 10', and gates with a maximum rolling section of 10' all having an apex height less than 8'-0" above lowest adjacent grade. When located above circulation or occupied space below, these gates/fences are not located within 1.5x gate/fence height (max 8'-0") to the edge of floor or roof.
☐	2. Handrails, guardrails, and modular or relocatable ramps associated with walking surfaces less than 30" above adjacent grade (excluding post base connections per the 'Exception' language in Section 1705A.2.1); fillet welds shall not be ground flush.
☐	3. Non-structural interior cold-formed steel framing spanning less than 15'-0", such as in interior partitions, interior soffits, etc. supporting only self weight and light-weight finishes or adhered tile, masonry, stone, or terra cotta veneer no more than 5/8" thickness and apex less than 20'-0" in height and not over an exit way. Maximum tributary load to a member shall not exceed the equivalent of that occurring from a 10'x10' opening in a 15' tall wall for a header or king stud.
☐	4. Manufactured support frames and curbs using hot rolled or cold-formed steel (i.e., light gauge) for mechanical, electrical, or plumbing equipment weighing less than 2000# (equipment only) (connections of such frames to superstructure elements using welding will require special inspection as noted in selected item(s) for Sections S/A3, S/A4 and/or S/A5 of listing above).
☐	5. Manufactured components (e.g., Tolco, B-Line, Afcon, etc.) for mechanical, electrical, or plumbing hanger support and bracing (connections of such components to superstructure elements using welding will require special inspection as noted in selected item(s) for Sections S/A3, S/A4 and/or S/A5 of listing above).
☐	6. TV Brackets, projector mounts with a valid listing (see DSA IR A-5) and recreational equipment (e.g., playground structures, basketball backstops, etc.) (connections of such elements to superstructure elements using welding will require special inspection as noted in selected item(s) for sections S/A3, S/A4 and/or S/A5 located in the Steel/Aluminum category of listing above).
☐	7. Any support for exempt non-structural components given in CBC Section 1617A.1.18 (which replaces ASCE 7-16, Section 13.1.4) meeting the following: A) when supported on a floor/roof, <400# and resulting composite center of mass (including component's center of mass) ≤4' above supporting floor/roof, B) when hung from a wall or roof/floor, <20# for discrete units or <5 plf for distributed systems.

DSA 103-22: LISTING OF STRUCTURAL TESTS & SPECIAL INSPECTIONS(SIGNATURE), 2022 CBC

Application Number: 04-122188
DSA File Number:
School Name: PC Update
Increment Number:
School District: PC Update
Date Created: 2023-04-19 08:36:32

Name of Architect or Engineer in general responsible charge:

Name of Structural Engineer (When structural design has been delegated):

Signature of Architect or Structural Engineer: Date:

Note: To facilitate DSA electronic mark-ups and identification stamp application, DSA recommends against using secured electronic or digital signatures.

DSA STAMP

PRE-CHECK (PC) DOCUMENT
Code: 2022 CBC
A separate project application for construction is required.

PRINTED ON :

IDENTIFICATION STAMP
DIV. OF THE STATE ARCHITECT
APP: 02-123848 INC: 01
REVIEWED FOR
SS ☑ FLS ☑ ACS ☑
DATE: 05/21/2026

LPA
ARCHITECTURE ENGINEERING INTERIOR DESIGN
LANDSCAPE ARCHITECTURE PLANNING
949-261-1001 Office
LPADesignStudios.com
5301 California Avenue, Suite 100
Irvine, California 92617

ICON STD	RO/DSA-PC
DRAWN BY	JD
DATE	3/21/202
REV	
REV DATE	

JRMA
ARCHITECTS ENGINEERS
2700 SATURN ST | BREA, CA 92821
T. 714.524.1870 F. 714.524.1875
WWW.JRMA.COM

Aug 31, 2023

APPROVED
DIV. OF THE STATE ARCHITECT
APP: 04-122188 PC
REVIEWED FOR
SS ☑ FLS ☑ ACS ☑ CG ☐
DATE: 09/21/2023

DSA 103

This document and all other project documents, ideas, aesthetics and designs incorporated therein are instruments of service. All project documents are copyright protected, are the property of LPA, Inc. (LPA) and cannot be lawfully used in whole or in part for any project or purpose except as set forth in the contractual agreement between LPA and its Client. The unauthorized disclosure and/or use of the project documents (including the creation of derivative works), may give rise to liability for copyright infringement, unlawful disclosure, use or misappropriation of property rights held by LPA. The unauthorized use of the project documents will give rise to the recovery of monetary losses and damages including attorney fees and costs for which the unauthorized user will be held liable.
Project documents describe the design intent of the work and are not a representation of as-built or existing conditions. LPA is not responsible for any discrepancies between the project documents and the existing conditions.

© LPA, Inc.

ELKHORN ELEMENTARY SCHOOL
CAMPUS MODERNIZATION INCREMENT 1

10505 DAVIS ROAD, STOCKTON, CA 95290

Developed for
LODI UNIFIED SCHOOL DISTRICT

Revision	Date

Submittal	Date
100% SCHEMATIC DESIGN	08/29/2025
DSA SUBMITTAL	12/18/2025

ICON Shelter Systems Inc
DISTINCTIVE STEEL SHELTERS
WWW.ICONSHELTERS.COM
COPYRIGHT 2006, ICON SHELTER SYSTEMS, INC.
1455 LINCOLN AVE
HOLLAND MI, 49423
616.396.0919
800.748.0985
616.396.0944 FX

Job Number	3194201
Checked By	AW, EW
Scale	AS NOTED

LS1.3

DSA 103

1PC1.30

****The footing layouts below should not be used for construction without first reviewing the project site plan and project specific install instructions from the manufacturer****

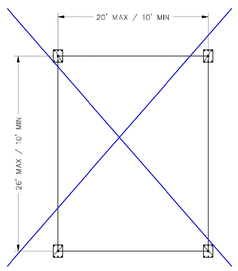

RG30X24 COLUMN LAYOUT
(1 BAY)

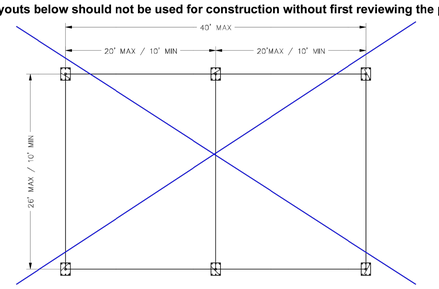

RG30X44 COLUMN LAYOUT
(2 BAYS)

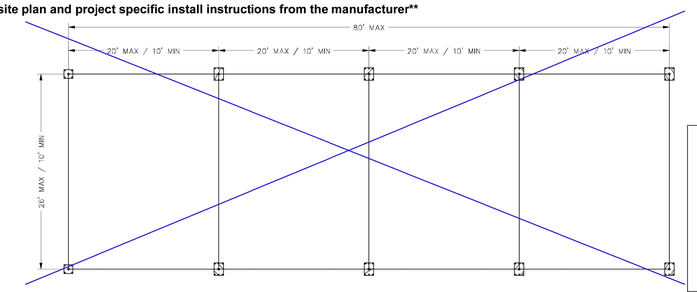

RG30X84 COLUMN LAYOUT
(4 BAYS)

BASE PLATE LOCATION		
	DETAIL A	DETAIL B
8'	BP1	BP3
10'	BP1	BP3
12'	BP2	BP3

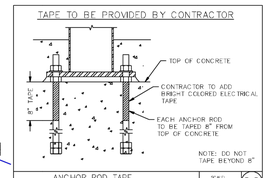

ANCHOR ROD TAPE REQUIREMENT — SCALE: N.T.S. — C2

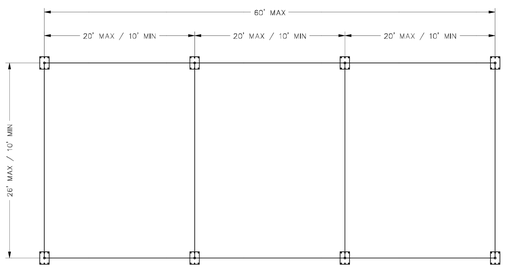

RG30X64 COLUMN LAYOUT
(3 BAYS)

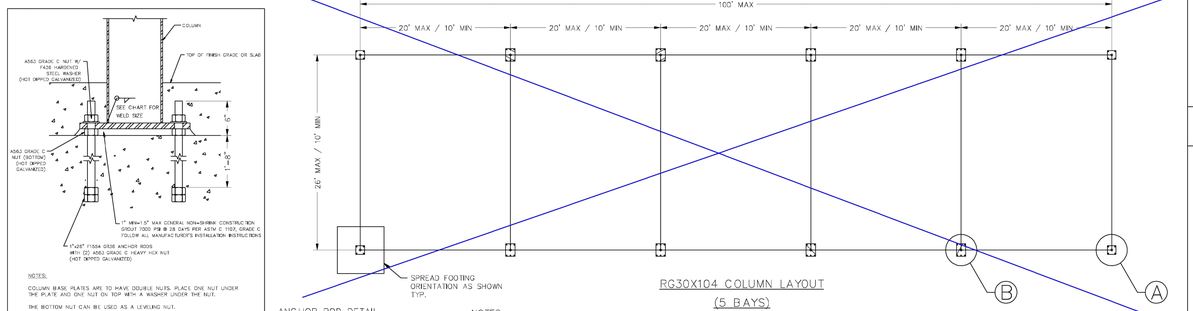

RG30X104 COLUMN LAYOUT
(5 BAYS)

ALL STRUCTURAL FASTENERS (NUTS, BOLTS & WASHERS) ON THIS SHEET TO BE HOT DIP GALVANIZED

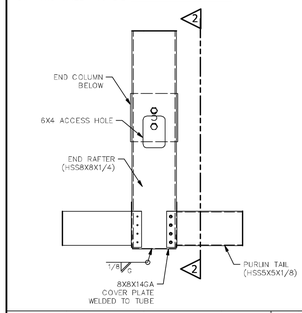

PLAN – PURLIN & END RAFTER CONNECTIONS @ END COLUMN | 1

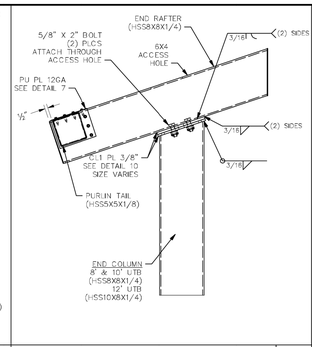

VIEW – PURLIN & END RAFTER CONNECTIONS @ END COLUMN | 2

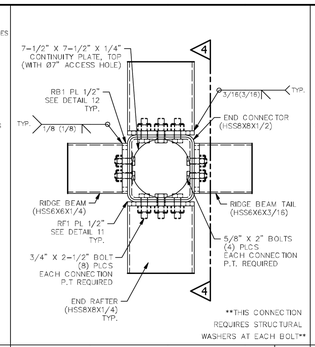

PLAN – END RAFTER & RIDGE BEAM CONNECTIONS @ END CONNECTOR | 3

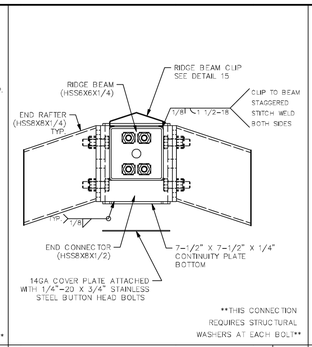

VIEW – END RAFTER & RIDGE BEAM CONNECTIONS @ END CONNECTOR | 4

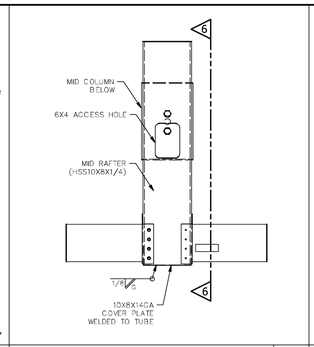

PLAN – PURLIN & MID RAFTER CONNECTIONS @ MID COLUMN | 5

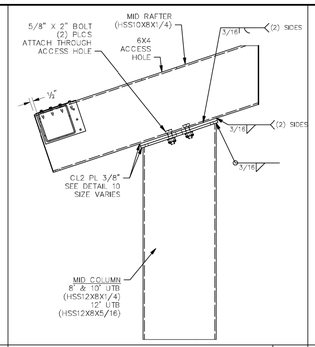

VIEW – PURLIN & MID RAFTER CONNECTIONS @ MID COLUMN | 6

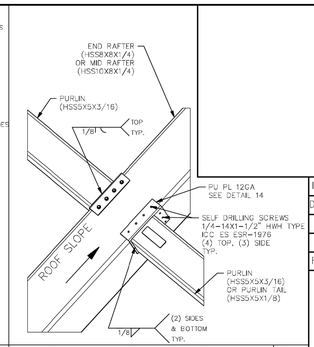

ISOMETRIC – PURLIN CONNECTIONS @ RAFTER | 7

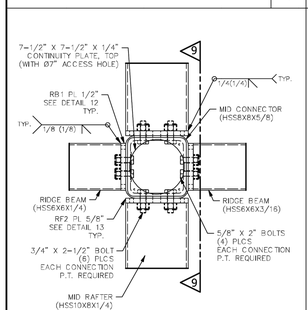

PLAN – MID RAFTER & RIDGE BEAM CONNECTIONS @ MID CONNECTOR | 8

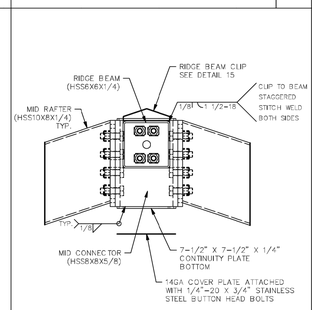

VIEW – MID RAFTER & RIDGE BEAM CONNECTIONS @ MID CONNECTOR | 9

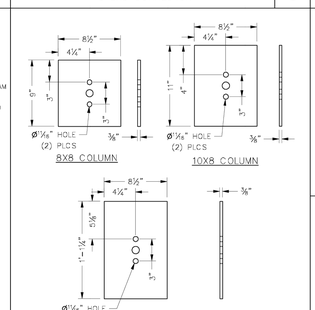

COLUMN TO RAFTER PLATE DETAILS | 10

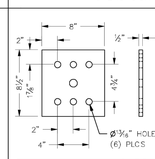

8X8 END RAFTER PLATE DETAIL | 11

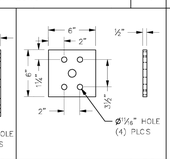

RIDGE BEAM PLATE DETAIL | 12

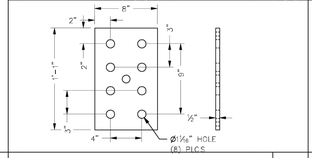

10X8 MID RAFTER PLATE DETAIL | 13

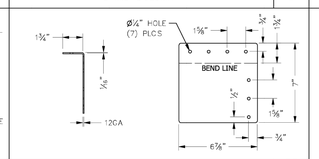

PURLIN PLATE DETAIL | 14

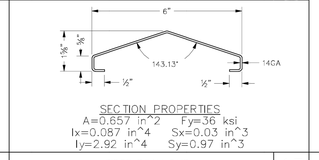

SECTION PROPERTIES
A=0.657 in^2 Fy=36 ksi
Ix=0.087 in^4 Sx=0.03 in^3
Iy=2.92 in^4 Sy=0.97 in^3

RIDGE BEAM CLIP (6" WIDE BEAM) | 15

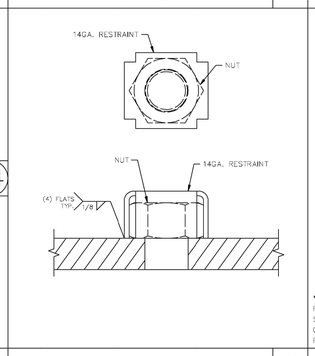

TYPICAL NUT RESTRAINING SYSTEM | NR

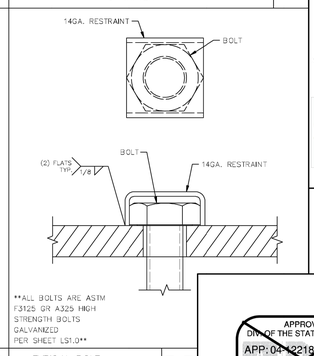

TYPICAL BOLT RESTRAINING SYSTEM | BR

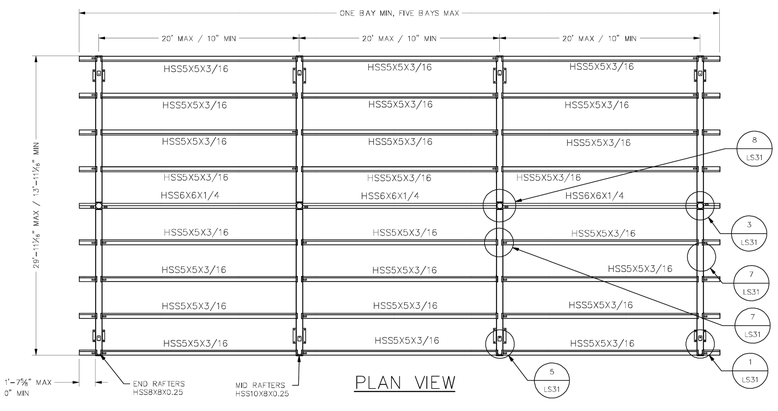

PLAN VIEW

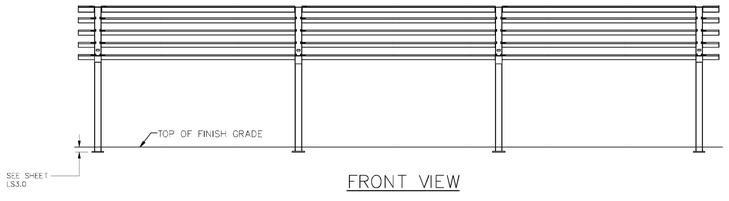

FRONT VIEW

*NOTE:
QUANTITIES WILL VARY DEPENDING ON SHELTER SIZE ORDERED, PLEASE REFER TO JOB SPECIFIC BILL OF MATERIALS AND INSTALLATION MANUAL.

ITEM	QTY	PART NUMBER	DESCRIPTION	MATERIAL	LENGTH	UNIT WEIGHT
1	4		END COLUMN	**SEE NOTE BELOW		285 lbmass
2	*		MID COLUMN	**SEE NOTE BELOW		381 lbmass
3	4		END RAFTER	HSS8X8X1/4		414 lbmass
4	*		MID RAFTER	HSS10X8X1/4		475 lbmass
5	**		PURLIN	HSS5X5X3/16		234 lbmass
6	6		PURLIN TAIL 1	HSS5X5X1/8		15 lbmass
7	6		PURLIN TAIL 2	HSS5X5X1/8		15 lbmass
8	*		RIDGE BEAM	HSS6X6X1/4		333 lbmass
9	2		RIDGE BEAM TAIL	HSS6X6X3/16		34 lbmass
10	2		END CONNECTOR	HSS8X8X1/2		35 lbmass
11	*		MID CONNECTOR	HSS8X8X5/8		55 lbmass

**NOTE:
MATERIAL WILL VARY DEPENDING ON SHELTER SIZE ORDERED.
- ☐ ~~END COLUMN 8' UTB – (HSS8X8X1/4)~~
- ☐ ~~MID COLUMN 8' UTB – (HSS12X8X5/16)~~
- ☐ ~~END COLUMN 10' UTB – (HSS8X8X1/4)~~
- ☐ ~~MID COLUMN 10' UTB – (HSS12X8X5/16)~~
- ☐ END COLUMN 12' UTB – (HSS10X8X1/4)
- ☐ MID COLUMN 12' UTB – (HSS12X8X5/16)

98" MIN IF USED OVER ACCESSIBLE PARKING OR ACCESS AISLES

114" MIN IF LOCATED OVER ACCESSIBLE PASSENGER LOADING ZONES

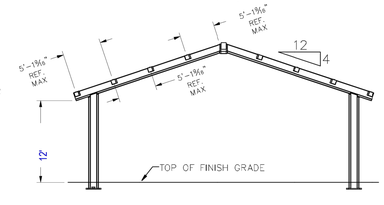

SIDE VIEW

**IF MULTI RIB ROOFING IS SELECTED ONLY (6) PURLINS ARE REQUIRED PER BAY

**IF MEGA RIB ROOFING IS SELECTED ONLY (6) PURLINS ARE REQUIRED PER BAY

**IF STANDING SEAM ROOFING IS SELECTED ADDITIONAL PURLINS ARE REQUIRED (8) PURLINS REQUIRED PER BAY

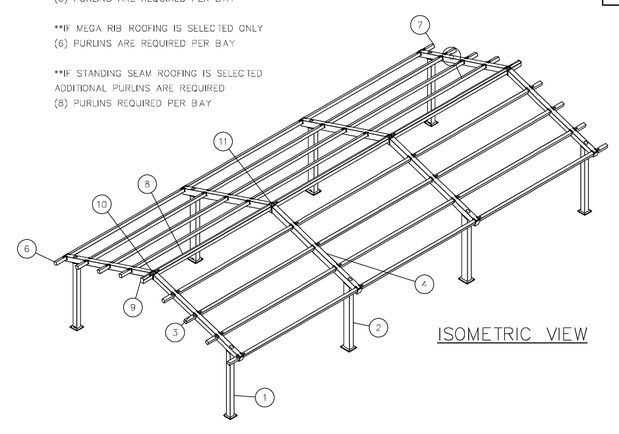

ISOMETRIC VIEW

MODEL DESIGNATION	
~~RG30X24~~	~~1 BAY~~
~~RG30X44~~	~~2 BAY~~
RG30X64	3 BAY
~~RG30X84~~	~~4 BAY~~
~~RG30X104~~	~~5 BAY~~

MODEL SHOWS 3 BAY SHELTER (RG30X64)
PLEASE REFER TO ANCHOR BOLT LAYOUT SHEET FOR CORRECT COLUMN PLACEMENT BASED ON SIZE ORDERED

PRE-CHECK (PC) DOCUMENT
Code: 2022 CBC
A separate project application for construction is required.

30' WIDE RECTANGULAR GABLE

30' WIDE RECTANGULAR GABLE FRAMING & CONNECTION DETAILS

ICON STD	RG/DSA-PC
DRAWN BY	JD
DATE	3/21/2023
REV	
REV DATE	

JRMA ARCHITECTS ENGINEERS
2700 SATURN ST.I BREA, CA 92821
T.714.524.1870 F.714.524.1875
WWW.JRMA.COM

Aug 31, 2023

ICON Shelter Systems Inc
DISTINCTIVE STEEL SHELTERS
WWW.ICONSHELTERS.COM
COPYRIGHT 2004, ICON SHELTER SYSTEMS, INC.
1455 LINCOLN AVE
HOLLAND MI, 49423
616.396.0919
800.748.0985
616.396.0944 FX

LS3.1

S:\Engineering\Inventor\DSA 2022\PC 2022 RG DSA\30 FOOT\DSA RG30-PA.dwg

PRINTED ON :

IDENTIFICATION STAMP
DIV. OF THE STATE ARCHITECT
APP: 02-123848 INC: 01
REVIEWED FOR
SS ☑ FLS ☑ ACS ☑
DATE: 05/21/2026

LPA
ARCHITECTURE ENGINEERING INTERIOR DESIGN
LANDSCAPE ARCHITECTURE PLANNING
949-261-1001 Office
LPADesignStudios.com
5301 California Avenue, Suite 100
Irvine, California 92617

This document and all other project documents, ideas, aesthetics and designs incorporated therein are instruments of service. All project documents are copyright protected, are the property of LPA, Inc. (LPA) and cannot be lawfully used in whole or in part for any project or purpose except as set forth in the contractual agreement between LPA and its Client. The unauthorized disclosure and/or use of the project documents (including the creation of derivative works), may give rise to liability for copyright infringement, unlawful disclosure, use or misappropriation of property rights held by LPA. The unauthorized use of the project documents will give rise to the recovery of monetary losses and damages including attorney fees and costs for which the unauthorized user will be held liable.
Project documents describe the design intent of the work and are not a representation of as-built or existing conditions. LPA is not responsible for any discrepancies between the project documents and the existing conditions.

© LPA, Inc.

ELKHORN ELEMENTARY SCHOOL
CAMPUS MODERNIZATION INCREMENT 1
10505 DAVIS ROAD, STOCKTON, CA 95290
Developed for
LODI UNIFIED SCHOOL DISTRICT

Revision	Date

Submittal	Date
100% SCHEMATIC DESIGN	08/29/2025
DSA SUBMITTAL	12/18/2025

Job Number	3194201
Checked By	AW, EW
Scale	AS NOTED

FRAMING & CONNECTION DETAILS

1PC3.10

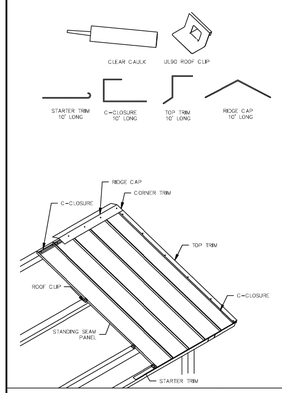

TRIM REFERENCE

THESE DETAILS ASSUME THAT ALL COMPONENTS OF THIS ROOF SYSTEM WILL BE INSTALLED PLUMB AND SQUARE. CAULK AND TRIM SHOULD ALSO BE INSTALLED TO ENSURE WATER TIGHTNESS

READ ALL DETAILS IN THIS INSTALLATION MANUAL BEFORE STARTING

S=ST1 STARTER TRIM
S=CP1 ROOF PANEL PREPARATION
S=PI1 FIRST ROOF PANEL
S=PI2 SECOND ROOF PANEL
S=RK1 TOP TRIM & C-CLOSURE @ RAKE
S=RC1 C-CLOSURE @ RIDGE
S=RK2 RIDGE CORNER TRIM
S=RT1 RIDGE CAP

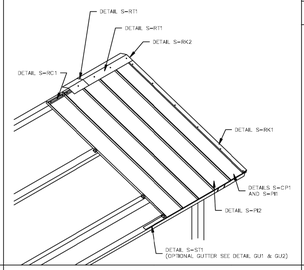

ORDER OF INSTALLATION

INSTALL STARTER TRIM OVERHANGING THE EDGE OF THE EAVE PURLIN 1/2". ATTACH STARTER TRIM WITH 1 1/2" PANCAKE HEAD SCREWS 12" O.C.

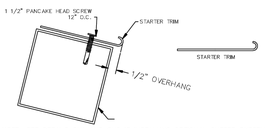

NOTE: SEE DETAILS GU1 AND GU2 IF INSTALLING OPTIONAL GUTTER SYSTEM

STARTER INSTALLATION S-ST1

MEASURE, MARK & CUT THE FIRST ROOF PANEL

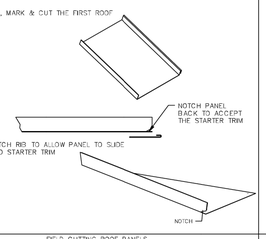

FIELD CUTTING ROOF PANELS S-CP1

AFTER THE ROOF PANEL HAS BEEN CUT TO SIZE (IF NECESSARY) AND NOTCHED, TEST FIT THE PANEL. THEN APPLY A BEAD OF CAULK THE APPROXIMATE LENGTH OF THE PANEL. SLIDE THE PANEL INTO PLACE, AND SQUARE IT UP TO THE ROOF.

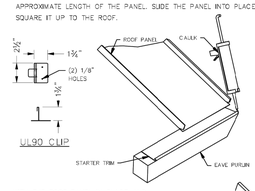

WITH THE ROOF PANEL IN PLACE AND SQUARE, INSTALL THE ROOF CLIPS WITH (2) 1 1/2" PANCAKE HEAD SCREWS.

ROOF CLIPS ARE INSTALLED AT EVERY CROSS MEMBER (EXCEPT RIDGE BEAM)

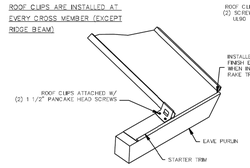

INSTALLATION OF FIRST ROOF PANEL S-PI1

AFTER THE SECOND ROOF PANEL HAS BEEN CUT TO LENGTH (IF NECESSARY) AND NOTCHED, TEST FIT THE PANEL. THEN APPLY A BEAD OF CAULK INSIDE THE STARTER TRIM. SLIDE THE SECOND ROOF PANEL IN PLACE AND SNAP IT OVER THE BATTEN OF THE FIRST PANEL

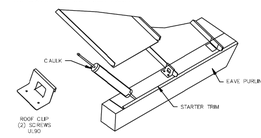

WITH THE SECOND ROOF PANEL IN PLACE AND SQUARE, INSTALL THE ROOF CLIPS WITH (2) 1 1/2" PANCAKE HEAD SCREWS.

REPEAT THIS STEP UNTIL ALL ROOF PANELS ARE INSTALLED

ROOF CLIPS ARE INSTALLED AT EVERY PURLIN

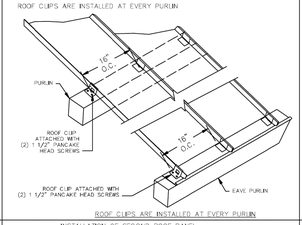

ROOF CLIPS ARE INSTALLED AT EVERY PURLIN

INSTALLATION OF SECOND ROOF PANEL S-PI2

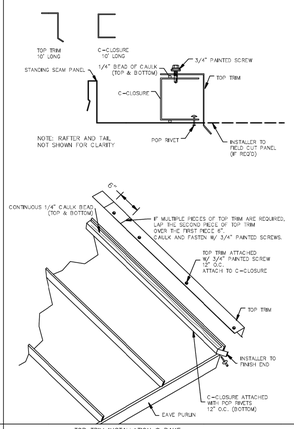

TOP TRIM INSTALLATION @ RAKE S-RK1

ROOF NOTES

ATTENTION INSTALLERS:
METAL SHAVINGS LEFT ON ROOF WILL QUICKLY RUST AND STAIN THE ROOF FINISH!

DRILLING OR INSTALLING ROOF FASTENERS WILL CAUSE METAL SHAVINGS. THESE SHAVINGS MUST BE CAREFULLY REMOVED AT THE END OF EACH DAY BY EITHER SWEEPING OR BRUSHING THE INSTALLED ROOF.

INSTALLED CORRECTLY	INSTALLED TOO TIGHT	INSTALLED TOO LOOSE
THE SEALING MATERIAL SLIGHTLY VISIBLE AROUND THE METAL WASHER	THE SEALING MATERIAL IS DEFORMED BEYOND THE EDGE OF THE METAL WASHER	THE SEALING MATERIAL IS NOT VISIBLE AROUND THE EDGE OF THE METAL WASHER

THE ERECTOR SHOULD THOROUGHLY FAMILIARIZE THEMSELVES WITH ALL INSTALLATION INSTRUCTION MATERIAL BEFORE STARTING WORK.

THE PANELS SHOULD BE INSTALLED PLUMB, STRAIGHT, AND ACCURATELY TO THE ADJACENT WORK.

ERECTORS SHALL BE RESPONSIBLE TO ENSURE THAT THE DETAILS MEET PARTICULAR BUILDING REQUIREMENTS AND TO ASSURE ADEQUATE WATER TIGHTNESS.

FOR THE BEST APPEARANCE ALL TRIM AND FLASHING SHALL BE INSTALLED TRUE, AND IN PROPER ALIGNMENT, WITH ALL EXPOSED FASTENERS EQUALLY SPACED.

SOME FIELD CUTTING AND/OR FITTING OF PANELS, TRIM AND FLASHING IS TO BE EXPECTED BY THE ERECTOR. MINOR FIELD CORRECTIONS ARE PART OF NORMAL ERECTION WORK.

THE INSTALLATION SHALL BE PERFORMED BY EXPERIENCED METAL CRAFTSPERSON AND WORKMANSHIP SHALL MEET THE BEST INDUSTRY STANDARDS.

TO INSTALL C-CLOSURES ALONG THE RIDGE MEASURE, MARK & CUT THE C-CLOSURE TO LENGTH.

APPLY A 1/4" BEAD OF CAULK TO THE BOTTOM OF THE C-CLOSURE AND FASTEN IT TO THE ROOF WITH (2) 3/4" PAINTED SCREWS (12" O.C. MAX CENTERED ON EACH PANEL) ALONG THE RIDGE BEAM. THEN APPLY CAULK TO THE END OF THE C-CLOSURE FOR WATER TIGHTNESS

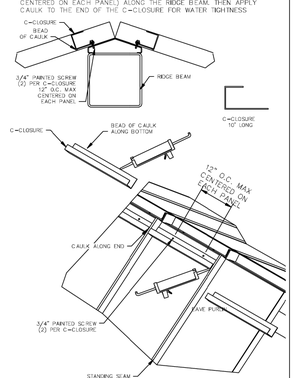

INSTALLATION OF C-CLOSURE @ RIDGE S-RC1

TO FINISH OFF THE END OF THE RIDGE, CUT THE TOP TRIM AS SHOWN.

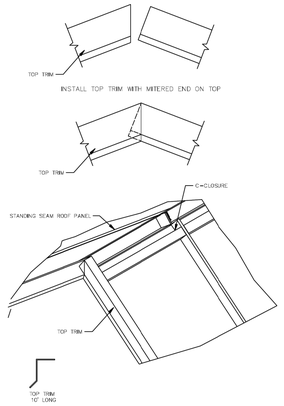

INSTALLATION OF CORNER TRIM S-RK2

TO INSTALL RIDGE CAP:
FIRST APPLY A BEAD OF CAULK ALONG THE TOP OF THE C-CLOSURES

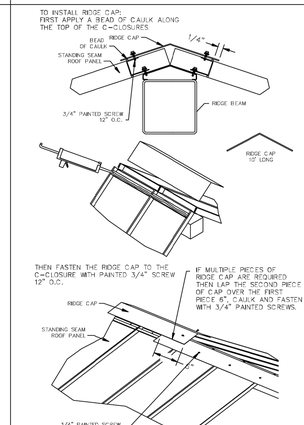

INSTALLATION OF RIDGE CAP S-RT1

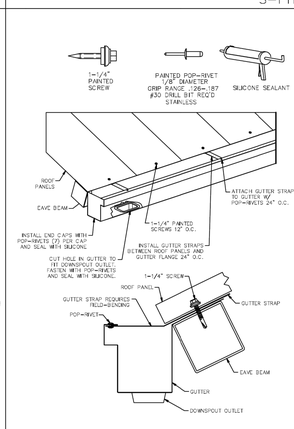

OPTIONAL GUTTER INSTALLATION
STANDING SEAM ROOF GU1

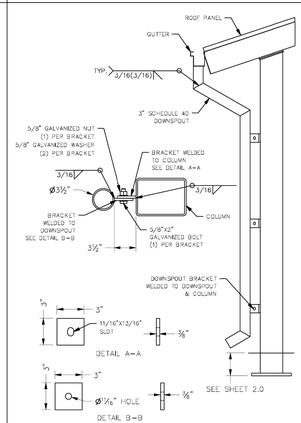

OPTIONAL GUTTER SECTION
STANDING SEAM ROOF GU2

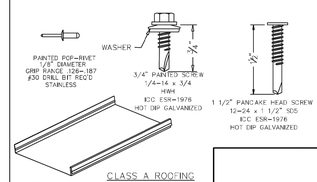

CLASS A ROOFING

MEDALLION LOK
STANDING SEAM PANEL SECTION
24 ga. Fy=50 ksi Fu=65 ksi
ICC ESL-1082

SECTION PROPERTIES
(PER FT. OF WIDTH)

TOP IN COMPRESSION
Ix=0.0848 in^4
Se=0.0565 in^3
Ma=1.4115 in-kips

BOTTOM IN COMPRESSION
Ix=0.0390 in^4
Se=0.0476 in^3
Ma=1.0305 in-kips

APPROVED
DIV. OF THE STATE ARCHITECT
APP: 04-122188 PC
REVIEWED FOR
SS ☑ FLS ☑ ACS ☑ CG ☐
DATE: 09/21/2023

30' WIDE RECTANGULAR GABLE STANDING SEAM ROOFING

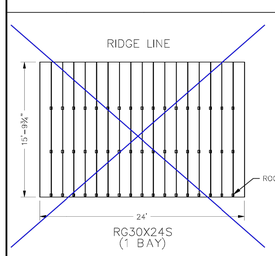

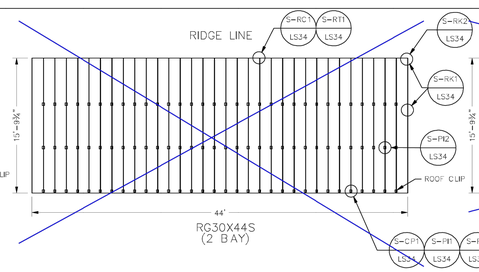

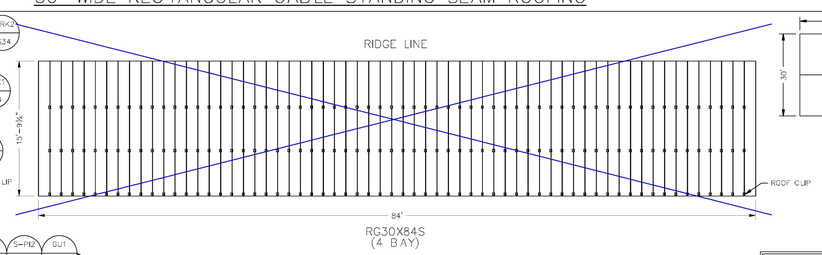

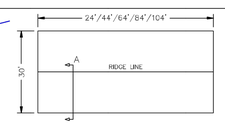

ROOF PLAN VIEW

INSTALLER TO FIELD CUT ALL ROOF PANELS

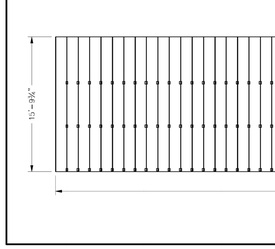

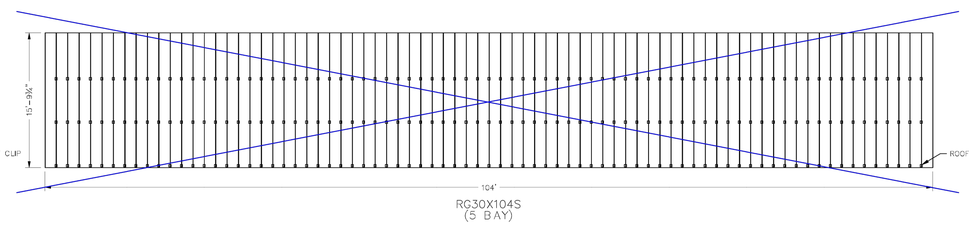

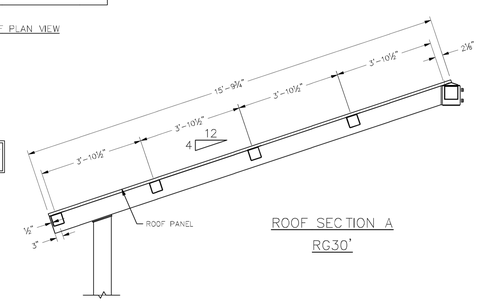

ROOF SECTION A
RG30'

PRE-CHECK (PC) DOCUMENT
Code: 2022 CBC
A separate project application for construction is required.

PRINTED ON :

S:\Engineering\Inventor\DSA 2019\PC 2019 RG DSA\ROOFS\30 FOOT WIDE ROOF\64 FOOT SS ROOF.iam

30' WIDE
RECTANGULAR GABLE
STANDING SEAM
ROOFING PLAN

ICON Shelter Systems Inc
DISTINCTIVE STEEL SHELTERS
WWW.ICONSHELTERS.COM
COPYRIGHT 2004, ICON SHELTER SYSTEMS, INC.
1455 LINCOLN AVE
HOLLAND MI, 49423
616.396.0919
800.748.0985
616.396.0944 FX

LS3.4

ICON STD	R0/DSA-PC
DRAWN BY	JD
DATE	3/21/2023
REV	
REV DATE	

JRMA ARCHITECTS ENGINEERS
2700 SATURN, STI BREA, CA 92821
T. 714.524.1870 F. 714.524.1875
WWW.JRMA.COM

REGISTERED PROFESSIONAL ENGINEER
STATE OF CALIFORNIA
Aug 31, 2023

IDENTIFICATION STAMP
DIV. OF THE STATE ARCHITECT
APP: 02-123848 INC: 01
REVIEWED FOR
SS ☑ FLS ☑ ACS ☑
DATE: 05/21/2026

LPA
ARCHITECTURE ENGINEERING INTERIOR DESIGN
LANDSCAPE ARCHITECTURE PLANNING
949-261-1001 Office
LPADesignStudios.com
5301 California Avenue, Suite 100
Irvine, California 92617

This document and all other project documents, ideas, aesthetics and designs incorporated therein are instruments of service. All project documents are copyright protected, are the property of LPA, Inc. (LPA) and cannot be lawfully used in whole or in part for any project or purpose except as set forth in the contractual agreement between LPA and its Client. The unauthorized disclosure and/or use of the project documents (including the creation of derivative works), may give rise to liability for copyright infringement, unlawful disclosure, use or misappropriation of property rights held by LPA. The unauthorized use of the project documents will give rise to the recovery of monetary losses and damages including attorney fees and costs for which the unauthorized user will be held liable.
Project documents describe the design intent of the work and are not a representation of as-built or existing conditions. LPA is not responsible for any discrepancies between the project documents and the existing conditions.

© LPA, Inc.

ELKHORN ELEMENTARY SCHOOL
CAMPUS MODERNIZATION INCREMENT 1

10505 DAVIS ROAD, STOCKTON, CA 95290

Developed for
LODI UNIFIED SCHOOL DISTRICT

Submittal	Date
100% SCHEMATIC DESIGN	08/29/2025
DSA SUBMITTAL	12/18/2025

Revision	Date

Job Number	3194201
Checked By	AW, EW
Scale	AS NOTED

ROOFING PLAN

1PC3.40

ELECTRICAL INFORMATION - RECTANGULAR GABLE

ICON'S STANDARD ELECTRICAL IS DESIGNED TO ACCOMMODATE Ø1/2" CONDUIT WITH A Ø3" INLET HOLE ON THE BOTTOM OF EACH COLUMN.
THE CONDUIT PATHWAY RUNS THROUGH THE COLUMN, RAFTER, AND RIDGE BEAM THROUGH ALL BOLTED CONNECTIONS AS SHOWN.
IF YOU HAVE SPECIAL ELECTRICAL REQUIREMENTS, PLEASE OUTLINE ANY CHANGES BELOW AS DESCRIBED.

PLEASE NOTE: DESIGN LIMITATIONS ON HOLE/CUTOUT SIZES MAY APPLY.
ICON WILL REACH OUT TO DISCUSS ANY SUCH LIMITATIONS AS NEEDED.

NOTE: ICON SHELTER FRAME IS NOT UL LISTED TO ACT AS A CONDUIT FOR
ELECTRICAL WIRING. CONSULT LOCAL BUILDING CODES WHEN PLANNING YOUR ELECTRICAL SYSTEM.

STEPS:

1. CONDUIT HOLE SIZE (DETAIL A)

2. ELECTRICAL EXIT HOLES (DETAIL B)

3. ELECTRICAL ACCESS & COVER PLATES (DETAIL C)

4. ELECTRICAL CONDUIT PATHWAY (DETAIL D)

☐ IF REQUIRED, PLEASE DRAW THE NECESSARY ELECTRICAL CONDUIT PATHWAY ON THE FRAME SHEET REQUIRED FOR BUILDING SIZE (LS2.1, LS3.1 & LS4.1)

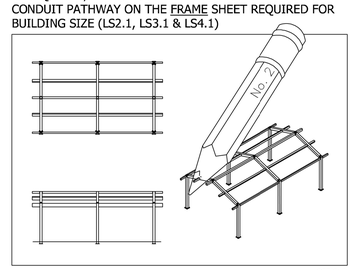

DETAIL D

OPTIONAL EXIT HOLES
IF REQUIRED, EXIT HOLES FOR LIGHTING, ETC. CAN BE
PLACED IN THE RIDGE BEAM AND/OR CONNECTOR
TUBE WITH 14ga COVER PLATE AS SHOWN (CHARGES APPLY)
USE FRAME SHEET OF THIS PRELIMINARY TO SPECIFY
REQUIRED EXIT HOLE LOCATIONS AND SIZES.

(1) EXIT HOLE PER CONNECTOR
(2) EXIT HOLES PER RIDGE BEAM

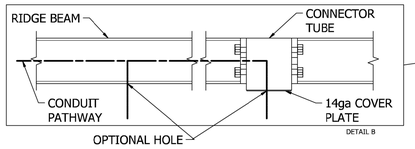

DETAIL B

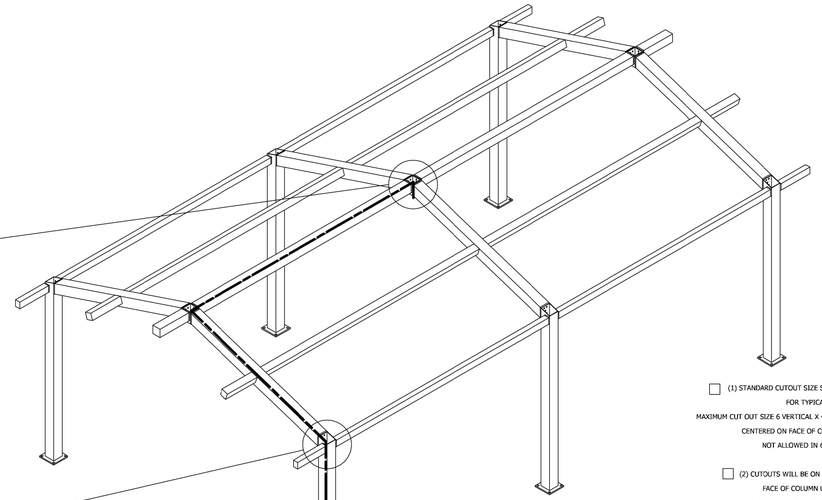

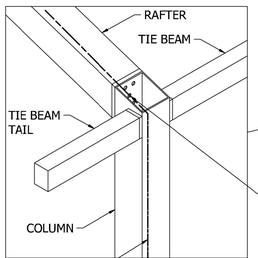

DETAIL A

ICON PROVIDES A MINIMUM OF (1) 3/4" HOLE AT
EACH CONNECTION FOR 1/2" CONDUIT.
IF APPLICABLE, PLEASE SPECIFY REQUIRED
CONDUIT SIZE: (CHARGES APPLY)

☐ 3/4" CONDUIT (1" HOLES)
☐ 1" CONDUIT (1 1/4" HOLES)

CONDUIT PATHWAY
PROVIDED FOR EACH
COLUMN.

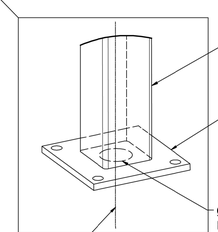

BASE DETAIL

PROVIDE GROUNDING PER CEC ARTICLE 250

OPTIONAL CUTOUTS
USE FRAME SHEET OF THIS PRELIMINARY TO SPECIFY REQUIRED CUTOUT
LOCATIONS (CHARGES APPLY)
SEE REQUIRED INFO BELOW

☐ (1) STANDARD CUTOUT SIZE SHOWN FOR TYPICAL GFCI
MAXIMUM CUT OUT SIZE 6 VERTICAL X 4 WIDE
CENTERED ON FACE OF COLUMN
NOT ALLOWED IN 6" FACE

☐ (2) CUTOUTS WILL BE ON INSIDE FACE OF COLUMN UNLESS OTHERWISE INDICATED ON FRAME SHEET.

☐ (3) SPECIFY HEIGHT ABOVE FINISHED GRADE FOR EACH CUTOUT AS SHOWN
18" MIN. FROM TOP OF FINISHED GRADE

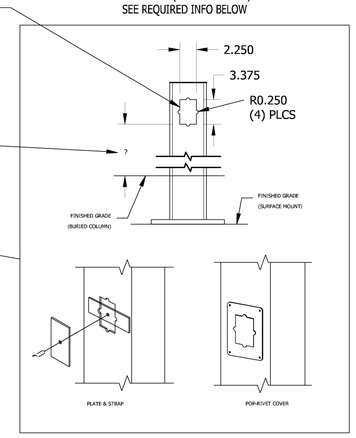

DETAIL C

(4) COVER PLATES PROVIDED UPON REQUEST
(CHARGES APPLY)
PLEASE SPECIFY TYPE AND QUANTITY REQUIRED:

☐ PLATE & STRAP
☐ POP-RIVET COVER PLATE (STAINLESS POP RIVET)
HOW MANY REQUIRED?_____

NOTE: BUILDING DEPICTED ON THIS SHEET FOR ILLUSTRATION
PURPOSES ONLY. ACTUAL LAYOUT AND FRAME MEMBER QUANTITIES
VARY BY DESIGN. PLEASE REFER TO ELEVATION AND FRAME SHEETS
IN THIS PC FOR ORDER-SPECIFIC CONFIGURATION.

PRE-CHECK (PC) DOCUMENT
Code: 2022 CBC
A separate project application for construction is required.

PRINTED ON :

ICON STD	RO/DSA-PC
DRAWN BY	JD
DATE	3/21/2023
REV	
REV DATE	

JRMA ARCHITECTS ENGINEERS
2700 SAUNDERS RD BREA, CA 92821
T. 714.524.1870 F. 714.524.1875
WWW.JRMA.COM

REGISTERED PROFESSIONAL ENGINEER
STATE OF CALIFORNIA

Aug 31, 2023

APPROVED
DIV. OF THE STATE ARCHITECT
APP: 04-122168 PC
REVIEWED FOR
SS ☑ FLS ☑ ACS ☑ CG ☐
DATE: 09/21/2023

OPTIONAL ELECTRICAL ACCESS

ICON Shelter Systems Inc
DISTINCTIVE STEEL SHELTERS
WWW.ICONSHELTERS.COM
COPYRIGHT 2004. ICON SHELTER SYSTEMS, INC.
1455 LINCOLN AVE
HOLLAND MI, 49423
616.396.0919
800.748.0985
616.396.0944 FX

LS5.0

IDENTIFICATION STAMP
DIV. OF THE STATE ARCHITECT
APP: 02-123848 INC: 01
REVIEWED FOR
SS ☑ FLS ☑ ACS ☑
DATE: 05/21/2026

LPA
ARCHITECTURE ENGINEERING INTERIOR DESIGN
LANDSCAPE ARCHITECTURE PLANNING
949-261-1001 Office
LPADesignStudios.com
5301 California Avenue, Suite 100
Irvine, California 92617

This document and all other project documents, ideas, aesthetics and designs incorporated therein are instruments of service. All project documents are copyright protected, are the property of LPA, Inc. (LPA) and cannot be lawfully used in whole or in part for any project or purpose except as set forth in the contractual agreement between LPA and its Client. The unauthorized disclosure and/or use of the project documents (including the creation of derivative works), may give rise to liability for copyright infringement, unlawful disclosure, use or misappropriation of property rights held by LPA. The unauthorized use of the project documents will give rise to the recovery of monetary losses and damages including attorney fees and costs for which the unauthorized user will be held liable.
Project documents describe the design intent of the work and are not a representation of as-built or existing conditions. LPA is not responsible for any discrepancies between the project documents and the existing conditions.

© LPA, Inc.

ELKHORN ELEMENTARY SCHOOL
CAMPUS MODERNIZATION INCREMENT 1

10505 DAVIS ROAD, STOCKTON, CA 95290

Developed for
LODI UNIFIED SCHOOL DISTRICT

Revision	Date

Submittal	Date
100% SCHEMATIC DESIGN	08/29/2025
DSA SUBMITTAL	12/18/2025

Job Number	3194201
Checked By	AW, EW
Scale	AS NOTED

OPTIONAL
ELECTRICAL ACCESS

1PC5.00