VOLUSIA COUNTY SCHOOLS
"LEADING WITH GRACE AND RESPECT"

THE SCHOOL BOARD OF VOLUSIA COUNTY FLORIDA
200 North Clara Avenue
DeLand, Florida 32720

HOLLY HILL SCHOOL REPLACE BOILER

VCS Project NO. 2648219

1500 CENTER AVENUE,
HOLLY HILL, FL. 32117

SCHOOL BOARD MEMBERS

RUBEN COLÓN	BOARD CHAIR
KRISTA GOODRICH	VICE BOARD CHAIR
DONNA BROSEMER	MEMBER
JAMIE HAYNES	MEMBER
JESSIE THOMPSON	MEMBER
DR. CARMEN J. BALGOBIN	SUPERINTENDENT

DESCRIPTION OF WORK

REMOVAL AND REPLACEMENT OF BOILERS AND GAS WATER HEATER

TO THE BEST OF OUR KNOWLEDGE, THESE DRAWINGS AND SPECIFICATIONS ARE COMPLETE AND COMPLY WITH THE FOLLOWING CODES AND THEIR REVISIONS:

8TH EDITION OF THE 2023 FLORIDA BUILDING CODE - BUILDING (FBCB)
8TH EDITION OF THE 2023 FLORIDA BUILDING CODE - EXISTING BUILDING (FBCEB)
8TH EDITION OF THE 2023 FLORIDA BUILDING CODE - ACCESSIBILITY (FBCA)
8TH EDITION OF THE 2023 FLORIDA BUILDING CODE - ENERGY CONSERVATION (FBCEC)
8TH EDITION OF THE 2023 FLORIDA BUILDING CODE - MECHANICAL (FBCM)
8TH EDITION OF THE 2023 FLORIDA BUILDING CODE - PLUMBING (FBCP)
8TH EDITION OF THE 2023 FLORIDA BUILDING CODE - FUEL GAS (FBCFG)
8TH EDITION OF THE 2023 FLORIDA FIRE PREVENTION CODE (FFPC)
NFPA 70 - 2020 NATIONAL ELECTRICAL CODE (NEC)
2014 STATE REQUIREMENTS FOR EDUCATIONAL FACILITIES (SREF)
VOLUSIA COUNTY SCHOOL DISTRICT DESIGN STANDARDS

BUILDING DATA

A.	SURVEY PARCEL ID	XXX
B.	LEGAL DESCRIPTION	XXX
C.	OCCUPANCY TYPE	XXX
D.	CONSTRUCTION TYPE	TYPE XXX
E.	RISK CATEGORY	XXX
F.	AUTOMATIC SPRINKLER	XXX
G.	BUILDING AREA	XXX
H.	BUILDING HEIGHT	XXX
I.	OCCUPANT LOAD	XXX

LOCATION MAP

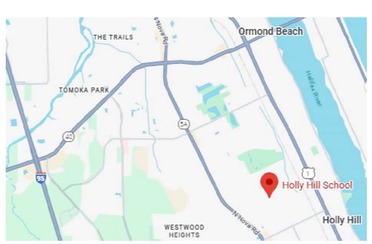

North

NOT TO SCALE

ENGINEERS & CONSULTANTS

ENGINEERING
DAVID A. DAVILSA
4083 SOUTH U.S. HIGHWAY 1, SUITE. 101
ROCKLEDGE, FLORIDA 32955
PHONE 321.633.4522
DASILVA.DAVID@DDC-ENGINEERS.COM
WWW.DDC-ENGINEERS.COM

SHT NO	TITLE
G001	COVER SHEET
M001	MECHANICAL LEGEND & NOTES
MD100	MECHANICAL DEMOLITION PLANS
M100	MECHANICAL PLANS
M500	MECHANICAL DETAILS
M600	MECHANICAL SCHEDULES
E001	ELECTRICAL LEGEND & NOTES
E100	ELECTRICAL PLANS
E500	ELECTRICAL DETAILS
E600	ELECTRICAL SCHEDULE & ONE-LINE DIAGRAM
P001	PLUMBING LEGEND & NOTES
PD100	PLUMBING DEMOLITION PLANS
P100	PLUMBING PLANS
P500	PLUMBING DETAILS & RISERS

CONSTRUCTION DOCUMENTS - 03/27/2026

ddc engineering inc
4083 South U.S. Highway 1, Ste. 101
Rockledge, Florida 32955
Phone 321.633.4522 Fax 321.633.4528
www.ddc-engineers.com
dasilva.david@ddc-engineers.com
C.O.A.: 25988
DDC PROJECT NO.: 25007.01

David A. DaSilva
54739

THIS ITEM HAS BEEN DIGITALLY SIGNED AND SEALED BY DAVID A. DASILVA ON THE DATE ADJACENT TO THE SEAL. PRINTED COPIES OF THIS DOCUMENT ARE NOT CONSIDERED SIGNED AND SEALED AND THE SIGNATURE MUST BE VERIFIED ON ANY ELECTRONIC COPIES.

REVISIONS

NO.	DATE	DESCRIPTION

DOCUMENT HISTORY

HOLLY HILL SCHOOL
REPLACE BOILER
VCS Project NO. 2648219
1500 CENTER AVENUE,
HOLLY HILL, FL. 32117

ENGINEER OF RECORD
ENGINEER
DAVID A. DASILVA

DESIGNED BY: DAD	DRAWN BY: IO/HR
ISSUE DATE: 03/27/2026	AE PROJECT NUMBER: 25007.01

SHEET TITLE
COVER SHEET

DRAWING NO.
G001

MECHANICAL SYMBOLS LEGEND, NOTES, AND REQUIREMENTS

HVAC LEGEND

Symbol	Description
20x12	DOUBLE LINE DUCTWORK, FIRST DIMENSION IS SIDE SHOWN.
20x12	SINGLE LINE DUCTWORK, FIRST DIMENSION IS SIDE SHOWN.
	ITEM(S) TO BE REMOVED
EDH-#	ELECTRIC DUCT HEATER
	FLEX DUCTWORK
OAL	OUTSIDE AIR LOUVER
RI-#	OUTSIDE AIR ROOF INTAKE
RI-#	DUCT UP TO OUTSIDE AIR ROOF INTAKE ABOVE
RV-#	EXHAUST AIR ROOF VENT
RV-#	DUCT UP TO EXHAUST AIR ROOF VENT ABOVE
EF-#	ROOF TOP EXHAUST FAN
EF-#	DUCT UP TO ROOF TOP EXHAUST FAN ABOVE
	CEILING DIFFUSER, ROUND NECK (CEILING DIFFUSERS ARE 4-WAY THROW UON)
	ROUND DIFFUSER
	CEILING RETURN GRILLE WITH SQUARE CONNECTION
	CEILING RETURN GRILLE WITH ROUND CONNECTION
	CEILING EXHAUST GRILLE
EF-#	EXHAUST FAN
SWD	SIDE WALL DIFFUSER
SWR	SIDE WALL RETURN
T	THERMOSTAT/TEMPERATURE SENSOR
H	HUMIDISTAT/HUMIDITY SENSOR
R S	PHOTOELECTRIC DUCT SMOKE DETECTOR R=RETURN S=SUPPLY
M	MOTORIZED CONTROL DAMPER
TS	TEMPERATURE SENSOR
P	PRESSURE SENSOR
BD	BACKDRAFT DAMPER
	CEILING MOUNTED ACCESS DOOR
	90° ELBOW W/TURNING VANES
	RADIUS ELBOW W/O TURNING VANES
	FIRE DAMPER (WITH ACCESS PANEL)
	FIRE & SMOKE DAMPER (WITH ACCESS PANEL)
	SMOKE DAMPER (WITH ACCESS PANEL)
	MANUAL BALANCING DAMPER
20"Ø	ROUND SPIRAL
20"Ø	DOUBLE LINE ROUND DUCTSOCK
20"Ø	SINGLE LINE ROUND DUCTSOCK
ZD-#	ZONE DAMPER
VAV-#	VARIABLE AIR VOLUME (VAV) BOX W/ NO HEAT
VAV-#	VARIABLE AIR VOLUME (VAV) BOX W/ HEAT
EF-#	IN-LINE EXHAUST FAN
CU-#	CONDENSER UNIT
AC-#	VERTICAL AC UNIT
AC-#	HORIZONTAL AC UNIT
HP-#	HORIZONTAL HEAT PUMP UNIT
RTU-#	PACKAGED ROOFTOP OR GROUND MOUNTED AC UNIT

HVAC PIPING LEGEND

Symbol	Description
CHS	CHILLED WATER SUPPLY
CHR	CHILLED WATER RETURN
CWS	CONDENSER WATER SUPPLY
CWR	CONDENSER WATER RETURN
REF	REFRIGERANT PIPING
CD	CONDENSATE
HWS	HOT WATER SUPPLY
	FLOW DIRECTION
	GATE VALVE OR BALL VALVE
	CALIBRATING BALANCING VALVE
	BUTTERFLY VALVE
	STRAINER
	CONTROL VALVE
	UNION
	CHECK VALVE
	THERMOMETER
	CONNECTION, BOTTOM
	CONNECTION, TOP

MISCELLANEOUS

Symbol	Description
#	SHEET NOTE CALLOUT
#	REVISION REFERENCE
	LIGHT DASHED INDICATES EXISTING FIXTURE OR DEVICE
	DARK DASHED INDICATES EXISTING FIXTURE OR DEVICE RELOCATED
	DARK SOLID INDICATES NEW FIXTURE OR DEVICE
	HATCHED ITEMS INDICATES FIXTURE OR DEVICE TO BE REMOVED OR RELOCATED
	NOT IN CONTRACT (N.I.C.)
	POINT OF CONNECTION
	POINT OF DISCONNECT
(150) NEW CFM / 100 EXISTING CFM	EXISTING DIFFUSER WITH CFM'S
AC-#	EQUIPMENT TAG

ABBREVIATIONS

ABV	- ABBREVIATION
AC	- AIR CONDITIONER
AFF	- ABOVE FINISHED FLOOR
AFG	- ABOVE FINISHED GRADE
AHU	- AIR HANDLING UNIT
AP	- ACCESS PANEL
AS	- AIR SEPARATOR
BD	- BYPASS DAMPER
BOP	- BOTTOM OF PIPE
BHP	- BRAKE HORSE POWER
BTUH	- BRITISH THERMAL UNIT
CAP	- CAPACITY
CD	- CONDENSATE DRAIN
CFM	- CUBIC FEET PER MINUTE
CH	- CHILLER
CHP	- CHILLED WATER PUMP
CHR	- CHILLED WATER RETURN
CHS	- CHILLED WATER SUPPLY
COMB	- COMBINATION
CONN	- CONNECTION
CONT	- CONTINUE
CT	- COOLING TOWER
CW	- COLD WATER
CWP	- CONDENSER WATER PUMP
CWS	- CONDENSER WATER SUPPLY
CWR	- CONDENSER WATER RETURN
CU	- CONDENSING UNIT
DB	- DRY BULB
DIA	- DIAMETER
DG	- DOOR GRILLE
DL	- DOOR LOUVER
DN	- DOWN
DP	- DIFFERENTIAL PRESSURE
DWG	- DRAWING
EA	- EXHAUST AIR
EAT	- ENTERING AIR TEMPERATURE
EDH	- ELECTRIC DUCT HEATER
EER	- ENERGY EFFICIENCY RATIO
EF	- EXHAUST FAN
EFF	- EFFICIENCY
EG	- EXHAUST GRILLE
ENT	- ENTERING
ESP	- EXTERNAL STATIC PRESSURE
ET	- EXPANSION TANK
EWT	- ENTERING WATER TEMPERATURE
EXP	- EXPANSION
FA	- FACE AREA
FCU	- FAN COIL UNIT
FD	- FIRE DAMPER
FLA	- FULL LOAD AMPS
FLEX	- FLEXIBLE
FPM	- FEET PER MINUTE
FS	- FLOOR SINK
FT	- FEET
FV	- FACE VELOCITY
GA	- GAUGE
GPM	- GALLONS PER MINUTE
HP	- HORSE POWER
HB	- HOSE BIBB
HR	- HOUR
HW	- HOT WATER
HWR	- HOT WATER RETURN
HWS	- HOT WATER SUPPLY
HZ	- HERTZ
IN	- INCHES
IW	- INDIRECT WASTE
KEF	- KITCHEN EXHAUST FAN
KSF	- KITCHEN SUPPLY FAN
KW	- KILOWATT
LAT	- LEAVING AIR TEMPERATURE
LF	- LINEAR FOOT
LWT	- LEAVING WATER TEMPERATURE
LD	- LINEAR DIFFUSER
LIQ	- LIQUID
LP	- LOOP PUMPS
MAU	- MAKE-UP AIR UNIT
MAX	- MAXIMUM
MBH	- THOUSAND BTU PER HOUR
MCA	- MINIMUM CIRCUIT AMPACITY
MECH	- MECHANICAL
MIN	- MINIMUM
MD	- MOTORIZED DAMPER
NC	- NORMALLY CLOSED
NFPA	- NATIONAL FIRE PROTECTION ASSOCIATION
NO	- NORMALLY OPEN
NOM	- NOMINAL
NTS	- NOT TO SCALE
OA	- OUTSIDE AIR
OAU	- OUTSIDE AIR UNIT
OC	- ON CENTER
PD	- PRESSURE DROP
PH	- PHASE
PRV	- PRESSURE REDUCING VALVE
PSI	- POUNDS PER SQUARE INCH
PSIG	- PSI GAUGE
PTAC	- PACKAGED TERMINAL AIR CONDENSER
PVC	- POLYVINYL CHLORIDE PIPE
QTY	- QUANTITY
RA	- RETURN AIR
REF	- REFRIGERANT
RG	- RETURN GRILLE
RPM	- REVOLUTIONS PER MINUTE
RLA	- RATED LOAD AMPS
RTU	- ROOF TOP UNIT
SA	- SUPPLY AIR
SEER	- SEASONAL ENERGY EFFICIENCY RATING
SEN	- SENSIBLE
SD	- SMOKE DAMPER
SP	- STATIC PRESSURE
SWD	- SIDEWALL DIFFUSER
SWR	- SIDEWALL RETURN
T	- THERMOSTAT
TEMP	- TEMPERATURE
TG	- TRANSFER GRILLE
TSH	- TOTAL SENSIBLE HEAT
TSP	- TOTAL STATIC PRESSURE
TYP	- TYPICAL
UC	- UNDER CUT
UG	- UNDER GROUND
UON	- UNLESS OTHERWISE NOTED
VAV	- VARIABLE AIR VOLUME
VLV	- VALVE
VSD	- VARIABLE SPEED DRIVE
WB	- WET BULB
ZD	- ZONE DAMPER
ΔT	- CHANGE IN TEMPERATURE
ΔP	- CHANGE IN PRESSURE

GENERAL NOTES

1. VERIFY THAT ALL EQUIPMENT, AS SHOWN ON THESE DRAWINGS, WILL NOT CONFLICT WITH ANY DRAINS, SCUTTLES, JOINTS, VENTS, PIPING OR OTHER EQUIPMENT PRIOR TO INSTALLATION.
2. EQUIPMENT SUPPLIER SHALL PROVIDE COMPLETE INFORMATION AND COOPERATE WITH THE OWNER'S REPRESENTATIVE AS REQUIRED FOR PROJECT COMPLETION AND COORDINATION.
3. CONTRACTOR SHALL ADMINISTER AND SUBMIT ALL DRAWINGS FOR PERMITTING.
4. ALL OUTSIDE AIR INTAKES SHALL BE A MINIMUM OF 10'-0" FROM ANY EXHAUST FAN, GAS OR PLUMBING VENT.
5. PROVIDE VIBRATION ISOLATION DEVICES AND FLEXIBLE CONNECTIONS TO ALL MOVING MACHINERY.
6. ALL PIPE AND DUCTWORK DIMENSIONS SHOWN ON DRAWINGS ARE CLEAR INSIDE DIMENSIONS.
7. COORDINATE WITH ALL OTHER TRADES, ALL REQUIRED OPENINGS AND ROOF PENETRATIONS. ALL REQUIRED OPENINGS IN FOUNDATIONS, FLOORS, WALLS AND ROOF SHALL BE MADE AND INSTALLED INTO THE STRUCTURE WITH THE USE OF SLEEVES, CURBS, ETC.
8. PROVIDE SHOP DRAWINGS FOR ALL HVAC EQUIPMENT AND MATERIALS.
9. CONTROL PANELS AND REMOTE SENSORS SHALL BE LOCATED GENERALLY AS SHOWN. EXACT LOCATIONS SHALL BE FIELD COORDINATED TO AVOID INTERFERENCE WITH WALL MOUNTED WORK.
10. FURNISH AND INSTALL 4" HIGH BLACK NAMEPLATES FOR ALL EQUIPMENT.
11. FIELD VERIFY ALL EXISTING SERVICES PRIOR TO START OF CONSTRUCTION.
12. REMOVE EXISTING CEILINGS, GRID, CEILING DEVICES, ETC., TO INSTALL NEW HVAC SYSTEMS. REINSTALL OR PROVIDE NEW CEILING GRID AND TILE, TO MATCH EXISTING CONDITIONS. REINSTALL EXISTING CEILING DEVICES.
13. CONTRACTOR SHALL BE RESPONSIBLE FOR THE REMOVAL OF EXISTING CEILING, WALLS, SLABS, ETC. TO INSTALL NEW SYSTEM. MINIMIZE SAW CUTTING OF WALLS, SLABS, ETC. PATCH AND REPAIR ALL SURFACES IMPACTED BY CONSTRUCTION. PAINT ALL SURFACE TO MATCH EXISTING FINISH.

GENERAL DEMOLITION NOTES

A. THE CONTRACTOR SHALL VISIT AND CAREFULLY EXAMINE THOSE PORTIONS OF THE BUILDING AND SITE AFFECTED BY THIS WORK BEFORE SUBMITTING PROPOSAL SO AS TO BECOME FAMILIAR WITH EXISTING WORK. SUBMISSION OF A PROPOSAL WILL BE CONSTRUED AS EVIDENCE THAT SUCH EXAMINATION HAS BEEN MADE AND LATER CLAIMS FOR LABOR, EQUIPMENT OR MATERIALS REQUIRED BECAUSE OR BY DIFFICULTIES ENCOUNTERED WILL NOT BE RECOGNIZED. IT IS TO BE UNDERSTOOD THAT UNFORESEEN CONDITIONS PROBABLY EXIST AND NEW WORK MAY NOT BE FIELD LOCATED EXACTLY AS SHOWN ON THE DRAWINGS. COOPERATION WITH OTHER TRADES IN EQUIPMENT ROUTING AS DETERMINED DURING CONSTRUCTION AND AS DIRECTED BY THE ARCHITECT/ENGINEER MAY BE NECESSARY AND IT IS INTENDED THAT SUCH DEVIATIONS SHALL BE CONSIDERED AS PART OF THIS CONTRACT. IT IS ALSO UNDERSTOOD THAT THE PLANS ARE NOT COMPLETELY TO SCALE. THIS CONTRACTOR IS TO FIELD VERIFY DIMENSIONS OF ALL EXISTING CONDITIONS, PRIOR TO BID AND INCLUDE ANY DEVIATIONS IN THE CONTRACT.
B. ALL DEVICES AND EQUIPMENT NOT SHOWN AND IN AREAS OUTSIDE OF REMODELING SHALL REMAIN ACTIVE UNLESS OTHERWISE NOTED. INSTALL AS REQUIRED TO MAINTAIN CONTINUITY TO EXISTING DEVICES AND EQUIPMENT THAT ARE TO REMAIN.
C. ALL EQUIPMENT AND MATERIAL REMOVED AND NOT REUSED SHALL BE TURNED OVER TO THE OWNER OR AT THE OWNERS REQUEST LEGALLY DISPOSED OF BY THE CONTRACTOR.
D. ALL HVAC DEVICES, EQUIPMENT, DUCTWORK, ETC., THAT ARE REMOVED SHALL BE REMOVED AS DIRECTED BY THE OWNER/ENGINEER, AND CEILING OR WALL SHALL BE PATCHED TO MATCH EXISTING OR NEW FINISH. ALL PATCHES SHALL BE PATCHED OR PAINTED AS DIRECTED BY ARCHITECTURAL DRAWINGS.
E. ALL EXISTING HVAC EQUIPMENT, DUCTWORK, DEVICES, ETC., IS NOT SHOWN. IT IS THE CONTRACTORS RESPONSIBILITY TO BECOME FAMILIAR WITH ALL EXISTING CONDITIONS PRIOR TO BID, AND INCLUDE IN HIS BID THE REMOVAL OF ALL EQUIPMENT, DUCTWORK, DEVICES, ETC., THAT IS NOT BEING REUSED BACK TO ITS SOURCE.
F. ALL CONCRETE, WALL PATCHING, CEILING REPAIR, AND OTHER GENERAL WORK REQUIRED FOR INSTALLING THE HVAC SYSTEMS AND TO REPAIR TO "LIKE NEW CONDITION" TO BE PROVIDED AND INSTALLED BY THE CONTRACTOR.
G. PROVIDE AND INSTALL ANY ADDITIONAL HANGERS/SUPPORTS REQUIRED TO ACCOMMODATE ANY EQUIPMENT RELOCATIONS.
H. COORDINATE ALL CEILING MOUNTED DEVICES WITH ARCHITECTURAL REFLECTED CEILING AND WORK OF ALL OTHER TRACES.
I. ITEMS NOTED AS EXISTING TO BE REMOVED SHALL BE REMOVED COMPLETELY. REMOVAL SHALL INCLUDE ALL DEVICES, PIPING, HANGERS, SUPPORTS, ETC.

SHOP DRAWING SUBMITTALS

ITEM	COPY FOR OWNER REVIEW	PRODUCT DATA				SHOP DRAWINGS		TEST REPORTS		COORDINATION DRAWINGS		WIRING DIAGRAMS		O & M MANUAL	
		1	2	3	4	1	2	1	2	1	2	1	2	1	2
BOILER EQUIPMENT	X	X	X			X	X	X	X	X	X	X	X	X	X
INSULATION	X	X	X			X	X							X	X
PIPING	X	X	X			X	X	X	X	X	X			X	X
CONTROLS	X	X	X			X	X	X	X			X	X	X	X
ELECTRIC DISCONNECTS	X	X	X			X	X							X	X
DUCTWORK/SUPPORTS	X	X	X			X	X			X	X			X	X

NOTES:
1- FOR REVIEW
2- FOR RECORD
3- COLOR SELECTION
4- SAMPLE

NOTE:
FOR ALL MATERIALS FOR CONSTRUCTION, INSTALLATION REQUIREMENTS AND TESTING REQUIREMENTS, REFER TO CONTRACT SPECIFICATIONS.

CONTRACTOR SHALL SUBMIT ALL ITEMS UNDER ONE SUBMITTAL THAT REFERENCES DDC PROJECT NUMBER. NO PARTIAL SUBMITTALS WILL BE ACCEPTED. ALL SUBMITTALS SHALL BE EMAILED TO INFO@DDC-ENGINEERS.COM .

DESIGN CRITERIA

DESIGN TEMPERATURES:

OUTDOOR AIR:
SUMMER: 95°F DB/80°F WB
WINTER: 30°F DB

INSIDE AIR:
SUMMER: 75°F DB/60% RH
WINTER: 72°F DB

NOTES:
THE DESIGN CRITERIA ABOVE IS BASED ON ASHRAE STANDARD 62.1. ANY CHANGES TO THIS OCCUPANCY OR FLOOR PLAN WILL REQUIRE FURTHER REVIEW AND MODIFICATIONS TO THIS VENTILATION SYSTEM.

CODE COMPLIANCE REQUIREMENTS

ALL WORK SHALL BE IN COMPLIANCE WITH THE FOLLOWING CODES, BUT NOT LIMITED TO:
8TH EDITION OF THE 2023 FLORIDA BUILDING CODE - BUILDING (FBCB)
8TH EDITION OF THE 2023 FLORIDA BUILDING CODE - EXISTING BUILDING (FBCEB)
8TH EDITION OF THE 2023 FLORIDA BUILDING CODE - ACCESSIBILITY (FBCA)
8TH EDITION OF THE 2023 FLORIDA BUILDING CODE - ENERGY CONSERVATION (FBCEC)
8TH EDITION OF THE 2023 FLORIDA BUILDING CODE - MECHANICAL (FBCM)
8TH EDITION OF THE 2023 FLORIDA BUILDING CODE - PLUMBING (FBCP)
8TH EDITION OF THE 2023 FLORIDA BUILDING CODE - FUEL GAS (FBCFG)
8TH EDITION OF THE 2023 FLORIDA FIRE PREVENTION CODE (FFPC)
NFPA 70 - 2020 NATIONAL ELECTRICAL CODE (NEC)

SCOPE OF WORK

- REMOVE AND REPLACE EXISTING BOILERS.
- REMOVE AND REPLACE EXISTING WATER HEATER.
- MODIFY ELECTRICAL SERVICE TO EQUIPMENT.
- MODIFY DDC CONTROLS FOR NEW EQUIPMENT.

NOTE: CONTRACTOR SHALL BE RESPONSIBLE FOR THE REMOVAL OF DOORS AND FRAMING AS NEEDED TO INSTALL NEW EQUIPMENTS. REFER TO MECHANICAL SPECIFICATIONS FOR FURTHER REQUIREMENTS.

ddc engineering inc
4083 South U.S. Highway 1, Ste. 101
Rockledge, Florida 32955
Phone 321.633.4522 Fax 321.633.4528
www.ddc-engineers.com
dasilva.david@ddc-engineers.com
C.O.A.: 25988
DDC PROJECT NO.: 25007.01

David A. DaSilva
54739

THIS ITEM HAS BEEN DIGITALLY SIGNED AND SEALED BY DAVID A. DASILVA ON THE DATE ADJACENT TO THE SEAL. PRINTED COPIES OF THIS DOCUMENT ARE NOT CONSIDERED SIGNED AND SEALED AND THE SIGNATURE MUST BE VERIFIED ON ANY ELECTRONIC COPIES.

REVISIONS

NO.	DATE	DESCRIPTION

HOLLY HILL SCHOOL
REPLACE BOILER
VCS Project NO. 2648219
1500 CENTER AVENUE,
HOLLY HILL, FL. 32117

ENGINEER OF RECORD
ENGINEER
DAVID A. DASILVA

DESIGNED BY	DRAWN BY
DAD	IO/HR
ISSUE DATE 03/27/2026	AE PROJECT NUMBER 25007.01

SHEET TITLE
MECHANICAL
LEGEND, NOTES

DRAWING NO.
M001

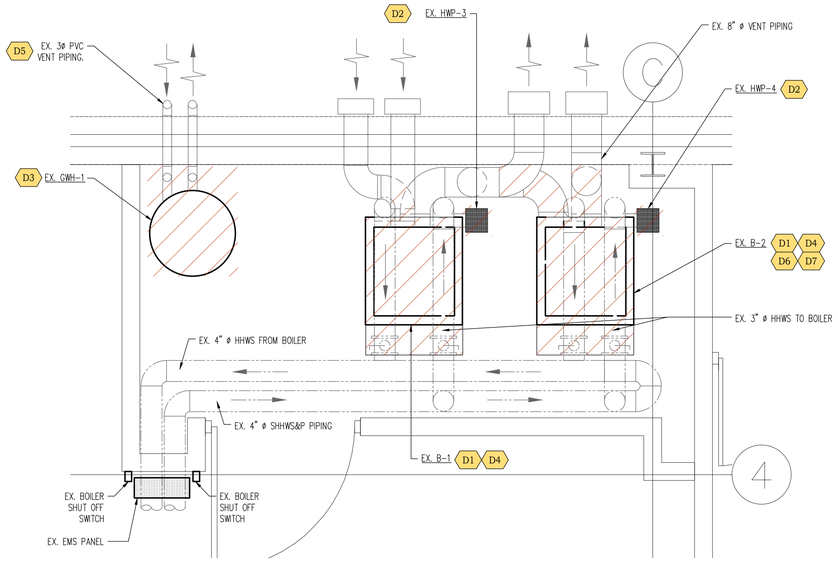

MECHANICAL DEMOLITION PLAN
ENLARGED BOILER ROOM
1/2" = 1'-0"

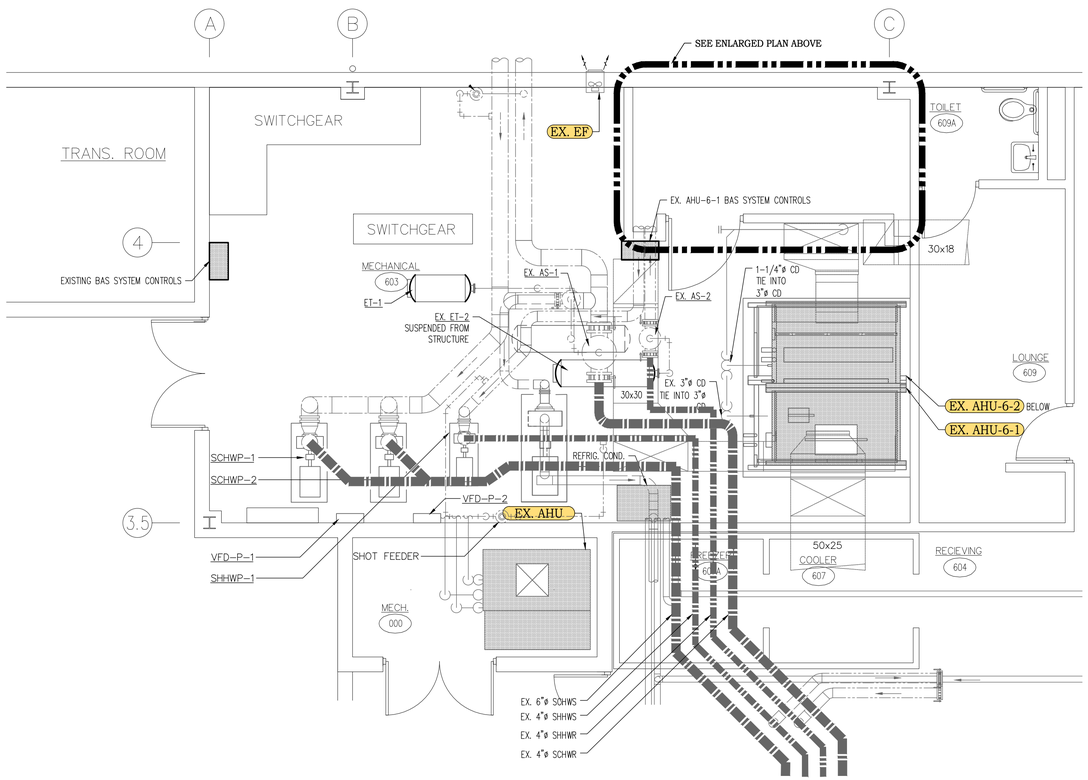

MECHANICAL DEMOLITION PLAN
1/4" = 1'-0"

DEMOLITION PLAN NOTES
MD#

D1. REMOVE EXISTING BOILER.

D2. DISCONNECT HOT WATER PIPING AND REMOVE BOILER PUMP.

D3. REMOVE EXISTING GAS WATER HEATER.

D4. REMOVE EXISTING VENT CONNECTION SERVING BOILER OR HEATER.

D5. DISCONNECT BENT PIPING.

D6. REMOVE ALL CONTROL TEMPERATURE SENSORS WITHIN PIPES BEING REPLACE.

D7. EXISTING CONTROL SYSTEM (ALERTON) TO BE REUSED.

EXISTING BOILERS

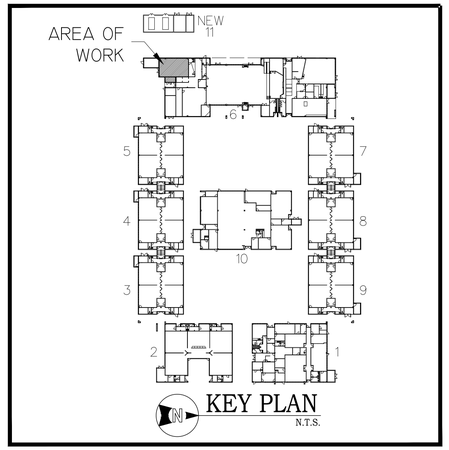

KEY PLAN
N.T.S.

ddc engineering inc
4083 South U.S. Highway 1, Ste. 101
Rockledge, Florida 32955
Phone 321.633.4522 Fax 321.633.4528
www.ddc-engineers.com
dasilva.david@ddc-engineers.com
C.O.A.: 25988
DDC PROJECT NO.: 25007.01

David A. DaSilva
54739

THIS ITEM HAS BEEN DIGITALLY SIGNED AND SEALED BY DAVID A. DASILVA ON THE DATE ADJACENT TO THE SEAL. PRINTED COPIES OF THIS DOCUMENT ARE NOT CONSIDERED SIGNED AND SEALED AND THE SIGNATURE MUST BE VERIFIED ON ANY ELECTRONIC COPIES.

REVISIONS

NO.	DATE	DOCUMENT HISTORY DESCRIPTION

HOLLY HILL SCHOOL
REPLACE BOILER
VCS Project NO. 2648219
1500 CENTER AVENUE,
HOLLY HILL, FL. 32117

ENGINEER OF RECORD
ENGINEER
DAVID A. DASILVA

DESIGNED BY	DRAWN BY
DAD	IO
ISSUE DATE 03/27/2026	AE PROJECT NUMBER 25007.01

SHEET TITLE
MECHANICAL DEMOLITION PLANS

DRAWING NO.
MD100

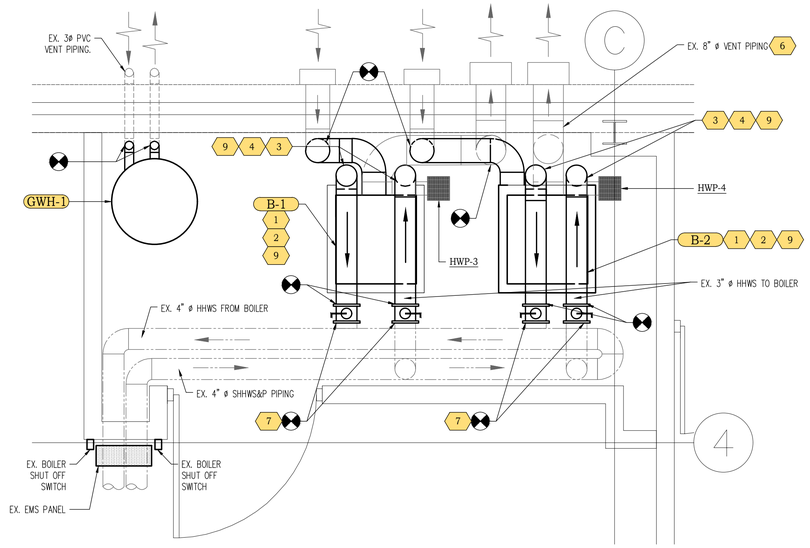

MECHANICAL PLAN
ENLARGED BOILER ROOM 1/2" = 1'-0"

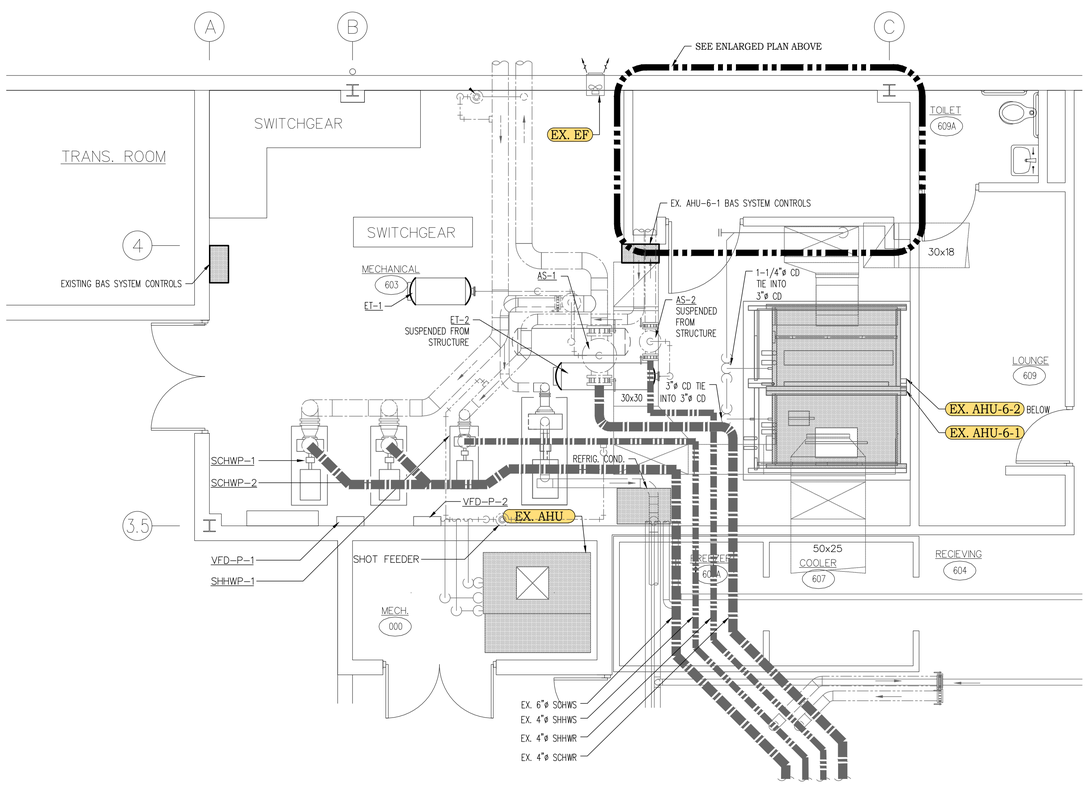

MECHANICAL PLAN
1/4" = 1'-0"

PLAN NOTES

1. INSTALL NEW BOILERS ON EXISTING CONCRETE PAD.
2. MODIFY PAD AS NECESSARY FOR NEW BOILERS.
3. CONNECT NEW BOILER TO EXISTING PIPING.
4. PROPERLY INSULATE ALL PIPING WITH SIMILAR TYPE INSULATION.
5. LABEL ALL PIPING.
6. CONNECT BOILERS TO EXISTING VENT SYSTEM.
7. INSTALL NEW BUTTERFLY VALVES.
8. INSTALL NEW ENTERING AND LEAVING HOT WATER TEMPERATURE SENSORS IN PIPES FOR EACH BOILER.
9. EXISTING DDC CONTROL PANEL TO CONNECT TO NEW BOILER CONTROL PANEL.

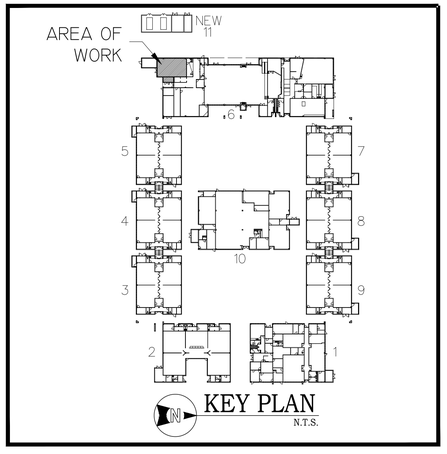

KEY PLAN
N.T.S.

ddc engineering inc
4083 South U.S. Highway 1, Ste. 101
Rockledge, Florida 32955
Phone 321.633.4522 Fax 321.633.4528
www.ddc-engineers.com
dasilva.david@ddc-engineers.com
C.O.A.: 25988
DDC PROJECT NO.: 25007.01

David A. DaSilva
54739

THIS ITEM HAS BEEN DIGITALLY SIGNED AND SEALED BY DAVID A. DASILVA ON THE DATE ADJACENT TO THE SEAL. PRINTED COPIES OF THIS DOCUMENT ARE NOT CONSIDERED SIGNED AND SEALED AND THE SIGNATURE MUST BE VERIFIED ON ANY ELECTRONIC COPIES.

REVISIONS

DOCUMENT HISTORY

NO.	DATE	DESCRIPTION

HOLLY HILL SCHOOL
REPLACE BOILER
VCS Project NO. 2648219
1500 CENTER AVENUE,
HOLLY HILL, FL. 32117

ENGINEER OF RECORD
ENGINEER
DAVID A. DASILVA

DESIGNED BY	DRAWN BY
DAD	IO/HR
ISSUE DATE	AE PROJECT NUMBER
03/27/2026	25007.01

SHEET TITLE
MECHANICAL PLANS

DRAWING NO.
M100

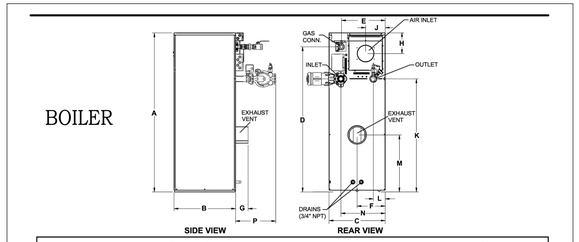

Power-Fin Water Heater — Dimensions and Specifications

Model No.	Input MBH	GPH @ 100°F Rise	A	B	C	D	(F) E	(M) E	F	G	H	J
○ PFN0502PM	500	515	44-1/2"	28-1/2"	23-1/4"	34"	18-3/4"	18-1/2"	6-1/2"	9-1/4"	8"	7-3/4"
○ PFN0752PM	750	773	52"	28-1/2"	23-1/4"	41-3/4"	19"	18-3/4"	6-3/4"	9-1/4"	8"	7-3/4"
○ PFN1002PM	999	1,030	59-1/4"	28-1/2"	23-1/4"	48-3/4"	17"	18-3/4"	7-1/4"	10-1/4"	8"	7-3/4"
○ PFN1302PM	1,300	1,339	67-3/4"	28-1/2"	23-1/4"	57-1/4"	17"	18-3/4"	8-1/4"	10-1/4"	8"	7-3/4"
✓ PFN1502PM	1,500	1,545	65-1/2"	29-3/4"	27-1/4"	59"	21"	20-3/4"	13-1/2"	9-1/4"	10"	9-1/2"
○ PFN1702PM	1,700	1,752	70"	29-3/4"	27-1/4"	63-1/2"	21"	20-3/4"	13-1/2"	9-1/4"	10"	9-1/2"
○ PFN2001PM	1,999	2,061	76-3/4"	29-3/4"	27-1/4"	70"	21"	20-3/4"	13-1/2"	9-1/4"	10"	9-1/2"

Model No.	K	L	M	N	(F) P	(M) P	Gas Conn.	Air Inlet	(F) Cat I	Vent Sizes (M)* Cat II	(M) Cat IV	Ship Wt. (lbs)
PFN0502PM	23"	11-1/2"	11-1/4"	17-1/2"	15-1/4"	15-1/4"	1"	5"	7"	7"	4"	535
PFN0752PM	30-1/2"	11-1/2"	11-1/4"	17-1/2"	15-1/4"	15-1/4"	1-1/4"	5"	9"	9"	5"	584
PFN1002PM	37-3/4"	11-1/2"	11-1/4"	17-1/2"	15-1/4"	15-1/4"	1-1/4"	6"	10"	10"	6"	663
PFN1302PM	46-1/4"	11-1/2"	19-1/2"	17-1/2"	15-1/4"	15-1/4"	1-1/4"	6"	12"	12"	8"	682
PFN1502PM	43-1/2"	5-3/4"	22-1/4"	21-1/2"	24-1/2"	19-1/2"	1-1/2"	6"	12"	8"	6"	1,131
PFN1702PM	48"	5-3/4"	25"	21-1/2"	24-1/2"	19-1/2"	1-1/2"	7"	14"	9"	7"	1,166
PFN2001PM	54-3/4"	5-3/4"	27-1/2"	21-1/2"	24-1/2"	19-1/2"	1-1/2"	8"	14"	10"	8"	1,193

Notes: Change "N" to "L" for LP Gas Model. No deration on LP models. All water connections are 2-1/2"

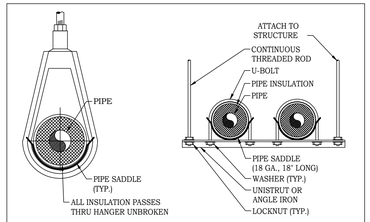

M1 INSULATED PIPE HANGER DETAIL

N.T.S. M-D009

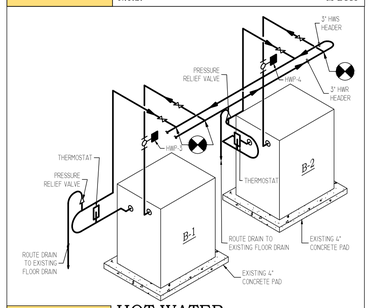

M2 HOT WATER BOILER DETAIL

N.T.S.

NOTES:

1. BOILER CIRCUIT PIPING MUST BE SIZED LARGE ENOUGH TO HANDLE MAXIMUM FLOW THROUGH UNIT.
2. BOILER PUMP SIZED TO BOILER DESIGN FLOW REQUIREMENTS.
3. ALL BOILERS FURNISHED WITH FACTORY MOUNTED OUTLET WATER TEMPERATURE GAUGE.
4. BOILER PUMP PURGING REQUIRED. USE TUBRIMALIS SUPPLIED.
5. A SENSOR IS REQUIRED AND INSTALLED AT A MINIMUM OF 12" FROM PRIMARY LOOP TEE.

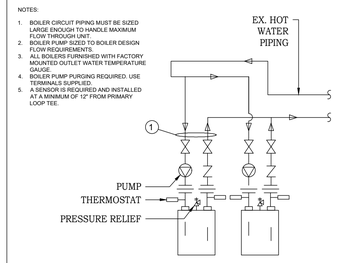

M3 MULTIPLE BOILERS DETAIL

ddc engineering inc
4083 South U.S. Highway 1, Ste. 101
Rockledge, Florida 32955
Phone 321.633.4522 Fax 321.633.4528
www.ddc-engineers.com
dasilva.david@ddc-engineers.com
C.O.A.: 25988
DDC PROJECT NO.: 25007.01

David A. DaSilva
54739

THIS ITEM HAS BEEN DIGITALLY SIGNED AND SEALED BY DAVID A. DASILVA ON THE DATE ADJACENT TO THE SEAL. PRINTED COPIES OF THIS DOCUMENT ARE NOT CONSIDERED SIGNED AND SEALED AND THE SIGNATURE MUST BE VERIFIED ON ANY ELECTRONIC COPIES.

REVISIONS

NO.	DATE	DESCRIPTION

HOLLY HILL SCHOOL
REPLACE BOILER
VCS Project NO. 2648219
1500 CENTER AVENUE,
HOLLY HILL, FL. 32117

ENGINEER OF RECORD
ENGINEER
DAVID A. DASILVA

DESIGNED BY	DRAWN BY
DAD	IO/HR
ISSUE DATE 03/27/2026	AE PROJECT NUMBER 25007.01

SHEET TITLE
MECHANICAL DETAILS

DRAWING NO.
M500

NEW PUMP SCHEDULE

ITEM NO.		HWP-3	HWP-4
SERVICE		BOILER	BOILER
TYPE		INLINE	INLINE
WATER FLOW/PRESSURE DROP	GPM/PD	128 / 3.8	128 / 3.8
TOTAL DYNAMIC HEAD	FT/WTR.	15	15
MOTOR	HP	1.0	1.0
SPEED	RPM	1760	1760
EFFICIENCY	%	68	68
MOTOR TYPE		ODP	ODP
BASE TYPE		DRIP TYPE	DRIP TYPE
IMPELLER DIA.	IN.	5.5	5.5
SUCTION DIA.	IN.	2.5	2.5
DISCHARGE DIA.	IN.	2.5	2.5
ELECTRICAL	V/PH./HZ.	120/1/60	120/1/60
CONTROLS		EMS	EMS
WEIGHT	LBS.	---	---
LOCATION		BOILER ROOM	BOILER ROOM
MANUFACTURER		TACO	TACO
MODEL		19351-C	19351-C
NOTES		SEE BELOW	SEE BELOW

PROVIDE ACCESSORIES:
1. PUMP SHALL BE DELIVERED TO SITE WITH FULL SIZED IMPELLAR. IMPELLAR SHALL BE TRIMMED AFTER TEST & BALANCE CONFIRMS FLOW AND PRESSURE.
2. PUMPS SHALL BE ALTERNATED FOR USE BY THE DDC.
3. FLANGE CONNECTION - MOUNT VERTICAL.
4. PROVIDE PREMIUM EFF. MOTORS.
5. PROVIDE MOTOR STARTER/DISCONNECT.
6. PUMP IS PACKAGED WITH BOILER.
7. PUMP SIZING BASED ON HEAT EXCHANGER HEAD LOSS, 30 FEET OF PIPING AND SIX (6) 90° ELBOWS.

NEW BOILER SCHEDULE

ITEM NO.		B-1	B-2
SERVICE		HEATING	HEATING
OPERATING PRESSURE		160 PSIG	160 PSIG
STORAGE CAPACITY	GAL/L	5/18.93	5/18.93
WTR FLOW/PRESS DROP	GPM/FT	128/3.58	128/3.58
ENT/LVG TEMP	°F/°F	160/180	160/180
INPUT	BTU/H	1,500,000	1,500,000
OUTPUT	BUT/H	1,278,000	1,278,000
GAS BURNER		NATURAL	NATURAL
BLOWER		YES	YES
BLOWER MOTOR	HP	1	1
FIRING RATE - OIL		---	---
FIRING RATE - GAS		1,500,000	1,500,000
HEATING SURFACE		COPPER	COPPER
WATER SIDE VOLUME	GAL	5	5
FIRE SIDE		---	----
ELECTRICAL	V/PH./HZ.	120/1/60	120/1/60
CONTOLS		-	-
OPERATING WEIGHT	LBS.	1,131	1,131
LOCATION		CENTRAL PLANT	CENTRAL PLANT
MANUFACTURER		LOCHINVAR	LOCHINVAR
MODEL		PFN-1501PM	PFN-1501PM
NOTES		SEE BELOW	SEE BELOW

PROVIDE ACCESSORIES:
- CONTACTS FOR ANY FAILURE
- LOW GAS PRESS. SWITCH
- MANUAL RESET LOW WATER CUT OFF (LWCO)
- BACNET CARD

ACCEPTABLE MANUFACTURES: A.O. SMITH, CLEAVER BROOKS, RBI HEATNET FUTERA III 1500

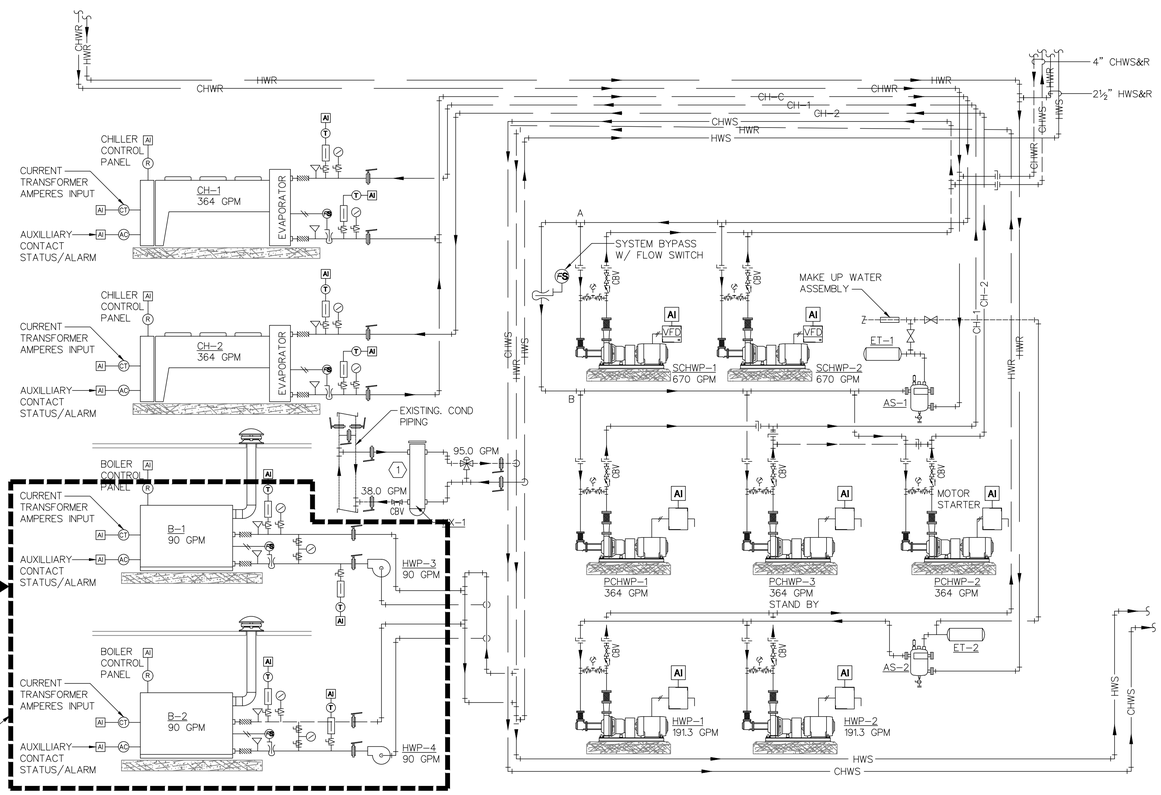

NOTE:
- CONTRACTOR TO REUSE EXISTING KMC CONTROLS AND MODIFY SYSTEM TO ACCOMMODATE NEW BOILERS AND GAS WATER HEATERS.
- PROVIDE START/STOP OF ALL BOILERS AS WELL AS INDICATED PUMPS.
- PROVIDE CURRENT SENSOR ON PUMPS.
- PROVIDE WATER HEATER TEMPERATURE SENSOR ON INLET AND OUTLET OF BOILERS.

HVAC SCHEMATIC

N.T.S.

ddc engineering inc
4083 South U.S. Highway 1, Ste. 101
Rockledge, Florida 32955
Phone 321.633.4522 Fax 321.633.4528
www.ddc-engineers.com
dasilva.david@ddc-engineers.com
C.O.A.: 25988
DDC PROJECT NO.: 25007.01

David A. DaSilva
54739

THIS ITEM HAS BEEN DIGITALLY SIGNED AND SEALED BY DAVID A. DASILVA ON THE DATE ADJACENT TO THE SEAL. PRINTED COPIES OF THIS DOCUMENT ARE NOT CONSIDERED SIGNED AND SEALED AND THE SIGNATURE MUST BE VERIFIED ON ANY ELECTRONIC COPIES.

REVISIONS

DOCUMENT HISTORY

NO.	DATE	DESCRIPTION

HOLLY HILL SCHOOL
REPLACE BOILER
VCS Project NO. 2648219
1500 CENTER AVENUE,
HOLLY HILL, FL. 32117

ENGINEER OF RECORD
ENGINEER
DAVID A. DASILVA

DESIGNED BY	DRAWN BY
DAD	IO/HR
ISSUE DATE	AE PROJECT NUMBER
03/27/2026	25007.01

SHEET TITLE
MECHANICAL SCHEDULES

DRAWING NO.
M600

ELECTRICAL WORK, GENERAL SCOPE

PART 1 - GENERAL

1.01 DESCRIPTION
A. DIVISION 16 OF THE SPECIFICATIONS COVERS ALL ELECTRICAL WORK FOR THE PROJECT. WORK SHALL INCLUDE LABOR, MATERIAL AND ACCESSORIES NECESSARY TO ACCOMPLISH THE WORK AS SPECIFIED AND SHOWN ON THE DRAWINGS, INCLUDING CONNECTION AND CHECKOUTS OF EQUIPMENT FURNISHED BY OTHERS (OTHER TRADES, THE OWNER AND OTHER CONTRACTORS), AND TO ALL EQUIPMENT ITEMS AND AS INDICATED ON DRAWINGS OR AS REQUIRED.
B. THE ARCHITECTURAL SPECIFICATIONS AND DRAWINGS INCLUDING THE GENERAL CONDITIONS, INCLUDING ALL SUPPLEMENTS ISSUED THERETO, INSTRUCTIONS TO BIDDERS, AND OTHERS PERTINENT DOCUMENTS ISSUED BY THE ARCHITECT ARE A PART OF THESE SPECIFICATIONS AND ELECTRICAL DRAWINGS. THIS TRADE SHALL CONSULT THEM FOR INSTRUCTIONS WHICH APPLY TO HIM. DRAWINGS INDICATE THE GENERAL ARRANGEMENT OF THE ELECTRICAL LAYOUT AND WORK INCLUDED. ELECTRICIAN SHALL FOLLOW DRAWINGS IN LAYOUT THE ELECTRICAL WORK AND CONSULT THE DRAWINGS AND LAYOUTS OF OTHER TRADES TO VERIFY LOCATION AND SPACES IN WHICH WORK WILL BE INSTALLED.

1.02 CODES, PERMITS AND INSPECTION
A. INSTALLATION SHALL COMPLY WITH THE 2020 NATIONAL ELECTRIC CODE, THE 2023 FLORIDA BUILDING CODE (8TH EDITION), AND THE MCPS FACILITY STANDARDS AND GUIDE SPECIFICATIONS.

1.03 QUALITY ASSURANCE
A. THE FOLLOWING INDUSTRY STANDARDS AS APPLICABLE TO ELECTRICAL WORK, SHALL APPLY TO THE WORK OF THIS DIVISION EXCEPT THAT, WHERE THE REQUIREMENTS OF THESE SPECIFICATIONS ARE MORE THAN THE LISTED STANDARD, THESE SPECIFICATIONS SHALL TAKE PRECEDENCE:
1. UL - UNDERWRITERS' LABORATORIES
2. NEMA - NATIONAL ELECTRICAL MANUFACTURERS' ASSOCIATION
3. NECA - NATIONAL ELECTRICAL CONTRACTOR'S ASSOCIATION
4. ANSI - AMERICAN NATIONAL STANDARDS INSTITUTE
5. ASTM - AMERICAN SOCIETY OF TESTING MATERIALS.
B. ALL MATERIALS SHALL BE NEW, UL LISTED AND LABELED WHERE LABELED MATERIALS ARE AVAILABLE, UNDAMAGED AND FREE OF DEFECTS AT TIME OF INSTALLATION. MATERIALS OR EQUIPMENT DAMAGED IN SHIPMENT OR OTHERWISE DAMAGED PRIOR TO OR DURING INSTALLATION SHALL NOT BE REPAIRED AT THE JOB SITE, BUT SHALL BE REPLACED WITH NEW MATERIALS. WHEN THE MANUFACTURER'S NAME APPEARS IN THESE SPECIFICATIONS AND DRAWINGS, IT SHALL BE CONSTRUED THAT THE MANUFACTURER HAS TO MEET THE FULL REQUIREMENTS OF THE SPECIFICATIONS AND DRAWINGS AND THAT HIS STANDARD CATALOGED ITEM MAY BE UNACCEPTABLE WITHOUT MODIFICATION.

1.04 SUBMITTALS
A. SHOP DRAWINGS AND PRODUCT DATA: SUBMIT SAME FOR EQUIPMENT AND/OR SYSTEMS AS INDICATED UNDER EACH SECTION OF THIS DIVISION. SHOP DRAWINGS SHALL INCLUDE SUFFICIENT INFORMATION TO INDICATE COMPLETE COMPLIANCE WITH SPECIFICATIONS.
B. PRODUCT DATA: EACH CONTRACTOR SHALL ACCUMULATE DURING THE JOB PROGRESS THE FOLLOWING DATA IN DUPLICATE, PREPARED IN A NEAT BROCHURE OR POCKET FOLDER, AND TURNED OVER TO THE OWNER'S REPRESENTATIVE
1. ALL WARRANTIES, GUARANTEES AND MANUFACTURERS DIRECTIONS ON EQUIPMENT AND MATERIAL COVERED BY THE CONTRACT.
2. COPIES OF APPROVED SHOP DRAWINGS.
3. REPAIR PARTS LIST OF ALL MAJOR ITEMS AND EQUIPMENT INCLUDING NAME, ADDRESS AND TELEPHONE NUMBER OF LOCAL SUPPLIER OR AGENT.
C. AT THE TIME OF EACH SUBMISSION, ANY DEVIATIONS FROM THE CONTRACT DOCUMENTS SHALL BE CALLED TO THE ATTENTION OF THE ARCHITECT-ENGINEER IN WRITING, AND SHALL BE PLAINLY MARKED ON THE SHOP DRAWINGS AND PRODUCT DATA.
D. RECORD DRAWINGS: PROVIDE ONE COMPLETE SET OF CONTRACT DRAWINGS IN CLEAN, UNDAMAGED CONDITION, INDICATING ALL SIGNIFICANT CHANGES FROM THE WORK AS SHOWN. USE MULTIPLE PENCIL COLORS TO AID IN THE DISTINCTION BETWEEN WORK OF SEPARATE ELECTRICAL SYSTEMS. IN GENERAL, RECORD EVERY SUBSTANTIVE INSTALLATION OF ELECTRICAL WORK WHICH PREVIOUSLY IS EITHER NOT SHOWN, SHOWN INCOMPLETELY, OR FIELD MODIFIED.
E. SHOW EXACT LOCATION OF UNDERGROUND CABLE AND CONDUITS INCLUDING HANDHOLES AND SIMILAR STRUCTURES, BOTH INTERIOR AND EXTERIOR, DRAWN TO SCALE AND FULLY DIMENSIONED FROM BUILDING COLUMN LINES.
F. INDICATE MAINS AND BRANCHES OF WIRING SYSTEMS, WITH SWITCHGEAR, PANELBOARDS AND CONTROLS DEVICES LOCATED AND NUMBERED. LOCATE ALL DEVICES REQUIRING MAINTENANCE. INDICATE CHANGES IN EQUIPMENT RATINGS, SETTINGS, AND LOCATION. INDICATE SCOPE OF EACH CHANGE ORDER, NOTING CHANGE ORDER NUMBER.
G. SUBMIT THE FOLLOWING UPON COMPLETION OF THE WORK: CERTIFICATE OF FINAL INSPECTION FROM LOCAL AUTHORITY. TABULATION OF ALL MOTORS LISTING RESPECTIVE MANUFACTURER, HORSEPOWER, NAMEPLATE VOLTAGE AND CURRENT, ACTUAL RUNNING CURRENT AFTER INSTALLATION AND OVERLOAD HEATER RATING.

1.05 OWNER RECORDS
A. ACCUMULATE DURING THE PROGRESS OF THE JOB, THE FOLLOWING DATA IN DUPLICATE, AND PREPARE IN A NEAT BROCHURE OR PACKET FOLDER TO BE TURNED OVER TO THE OWNER AT SUBSTANTIAL COMPLETION: RECORD DRAWINGS PER ABOVE.
B. ALL WARRANTIES, GUARANTEES, AND MANUFACTURER'S DIRECTION ON EQUIPMENT & MATERIAL FURNISHED.
C. COMPLETE PLAIN ENGLISH STEP-BY-STEP OPERATING INSTRUCTIONS FOR THE ELECTRICAL SYSTEM. ONE COPY OF THESE INSTRUCTIONS SHALL BE FRAMED AND POSTED AS DIRECTED ON THE PREMISES.

1.06 MANUFACTURERS' NAMES AND CATALOG NUMBERS
A. IN SOME INSTANCES, SPECIFIC REFERENCES HAVE BEEN MADE TO ONE OR MORE MANUFACTURER'S NAME AND MODEL OR CATALOG NUMBERS. USE OF NAMES AND CATALOG NUMBERS DOES NOT INDICATE THAT THE EQUIPMENT SPECIFIED IN NECESSARILY AN "OFF THE SHELF" ITEM. VARIANCES MAY BE DUE TO REQUIREMENT OF DESIRED FINISH, MATERIAL OR OTHER MODIFICATION.

1.07 PROTECTION OF EQUIPMENT
A. ELECTRICAL EQUIPMENT SHALL BE PROTECTED FROM THE WEATHER, IN PARTICULAR, DRIPPING OR SPLASHING WATER, AT ALL TIMES DURING SHIPMENT, STORAGE AND CONSTRUCTION. MANUFACTURER'S RECOMMENDATIONS WITH REGARD TO STORAGE, PROTECTION, AND HANDLING SHALL BE FOLLOWED.
B. SHOULD ANY APPARATUS BE SUBJECTED TO POSSIBLE INJURY DUE TO WATER, IT SHALL BE THOROUGHLY DRIED AND PUT THROUGH A DIELECTRIC TEST, AT THE EXPENSE OF THE CONTRACTOR, TO ASCERTAIN THE SUITABILITY OF THE APPARATUS OR IT SHALL BE REPLACED WITHOUT ADDITIONAL COST.
C. DAMAGED OR DEFECTIVE EQUIPMENT: INSPECT ALL ELECTRICAL EQUIPMENT AND MATERIALS PRIOR TO INSTALLATION. INSTALLATION OR PLACEMENT INTO SERVICE OF DAMAGED MATERIALS WITHOUT THE PRIOR WRITTEN CONSENT OF THE OWNER IS PROHIBITED. REPLACE OR REPAIR TO NEW CONDITION, AS CERTIFIED BY THE MANUFACTURER, AND TEST DAMAGED EQUIPMENT IN COMPLIANCE WITH INDUSTRY STANDARDS AT NO ADDITIONAL COST TO THE OWNER. EQUIPMENT REQUIRED FOR THE TESTING SHALL BE PROVIDED BY THE CONTRACTOR.

1.08 WORKING CLEARANCE
A. THE SIZE OF ELECTRICAL EQUIPMENT SHOWN ON THE DRAWINGS IS BASED ON DIMENSIONS OF A PARTICULAR MANUFACTURER, (GENERALLY THE FIRST NAMED). WHILE OTHER MANUFACTURERS MAY BE ACCEPTABLE, IT IS THE RESPONSIBILITY OF THE TRADE TO DETERMINE IF THE EQUIPMENT PROPOSED WILL FIT IN THE ALLOCATED SPACE.
B. INSTALL ALL EQUIPMENT IN A MANNER TO PERMIT ACCESS TO ALL SURFACES. MAINTAIN PROPER CLEARANCE TO MEET ALL SAFETY AND OPERATING CODES, PARTICULARLY N.E. CODE. INCLUDE ALL REQUIREMENTS DICTATED BY OPERATION, CONTROL, ADJUSTMENT, MAINTENANCE AND POSSIBLE REPLACEMENT OF EQUIPMENT IN DETERMINING CLEARANCE.
C. SHOULD THERE BE APPARENT VIOLATIONS OF N.E. CODE CLEARANCE, NOTIFY THE ARCHITECT-ENGINEER BEFORE PROCEEDING WITH CONNECTION OR PLACEMENT OF EQUIPMENT.

PART 2 - PRODUCTS

2.01 GENERAL
A. ALL EQUIPMENT OF A PARTICULAR KIND, SUCH AS SWITCHBOARDS, CONTROL CENTERS, PANELBOARDS, ETC, SHALL BE THE PRODUCT OF THE SAME MANUFACTURER.
B. PROVIDE ACCESS PANELS FOR ALL EQUIPMENT AND DEVICES REQUIRING SAME. SIZE AS REQUIRED FOR PROPER ACCESS AND MAINTENANCE, MINIMUM ACCEPTABLE IS 12 IN. BY 12 IN. CLEAR OPENING WHERE HAND ACCESS ONLY IS REQUIRED.
C. PROVIDE LABELS FOR EACH MOTOR CONTROLLER, SAFETY SWITCH, RELAY, PANELBOARD, CONTACTOR, TIMER, CONTROL DEVICE, METER AND CIRCUIT BREAKER. LABELS SHALL BE LAMINATED, PHENOLIC STRIPS 1/16 INCH THICK, AND ENGRAVED TO SHOW BLACK LETTERS ON A WHITE BACKGROUND NOT LESS THAN 1/4 INCH HIGH. SIZE STRIPS TO PROPERLY FIT MANUFACTURER'S BRACKETS AND BE LEGIBLE. WHERE MANUFACTURER'S BRACKETS ARE NOT PROVIDED, MOUNT LABELS WITH PROPER SCREWS, OR AN APPROVED ADHESIVE.
D. PROVIDE MATCHING CIRCUIT BREAKERS FOR ALL EXISTING PANELBOARDS. UPDATE ALL PANEL DIRECTORIES.

2.02 RACEWAYS
A. CONDUIT, RIGID STEEL; GALVANIZED AND MANUFACTURED IN ACCORDANCE WITH ANSI STANDARDS. FITTINGS SHALL BE PIPE THREADED, MALLEABLE IRON.
B. CONDUIT, PVC: POLYVINYLCHLORIDE SCHEDULE 40 PIPE SPECIFICALLY MANUFACTURED AND LABELLED (UL STANDARD 651) FOR USE AS ELECTRICAL CONDUIT. FITTINGS SHALL BE EITHER SOCKET WELDED TYPE OR THREADED.
C. CONDUIT, FLEXIBLE METALLIC: GALVANIZED, INTERLOCKED SPIRALLY WOUND STEEL STRIP WITH GALVANIZED OR SHERADIZED FITTINGS. LISTED PER UL-L. LIQUIDTIGHT FLEXIBLE METALLIC: GALVANIZED, INTERLOCKED SPIRALLY WOUND STEEL STRIP WITH OVERALL JACKET OF LIQUID TIGHT PYC, UL LISTED. FITTINGS SHALL BE STEEL OR MALLEABLE IRON WATERTIGHT.
D. ELECTRIC METALLIC TUBING; GALVANIZED OR SHERADIZED AND MANUFACTURED IN ACCORDANCE WITH ANSI STANDARD C80.3. FITTINGS 3/4 INCH THROUGH 2 INCH TRADE SIZE SHALL BE COMPRESSION TYPE, MANUFACTURED FROM MALLEABLE IRON OR STEEL, AND RAIN AND/OR CONCRETE-TIGHT AS REQUIRED BY INSTALLATION. POT METAL OR DIE CAST TYPE FITTINGS ARE PROHIBITED. ONLY COMPRESSION FITTINGS TO BE USED IN INTERIOR SPACES.
E. PROVIDE TYTON SURFACE MOUNTED RACEWAYS AS INDICATED IN DRAWINGS, AND IN ACCORDANCE WITH THE MCPS FACILITY STANDARDS.

2.03 CONDUCTORS AND CABLE
A. GENERAL: ALL CONDUCTORS SHALL BE NINETY-EIGHT PERCENT (98%) CONDUCTIVITY SOFTDRAWN COPPER, NEW, INSULATED IN ACCORDANCE WITH N.E. CODE FOR THE TYPE OF SERVICE. UNLESS OTHERWISE NOTED, ALL ELECTRICAL CONDUCTORS SHALL BE INSULATED WITH TYPE "THWN" INSULATION AND HAVE STRANDED CONDUCTORS.
B. CONNECTORS FOR SPLICING CONDUCTORS AWG AND SMALLER SHALL BE LIVE SPRING TYPE PRESSURE CONNECTORS AS MANUFACTURED BY 3M "SCOTCHLOK" OR APPROVED EQUAL.
C. CONNECTORS FOR #8 AWG AND LARGER SHALL BE TWO-WAY LONG BARREL COMPRESSION TYPE WITH INSULATING COVER, THOMAS & BETTS "COLOR-KEYED"OR APPROVED EQUAL. WHERE"GUTTER TAPS" ARE REQUIRED CONNECTORS ARE TO BE H-TYPE WITH INSULATING COVERS.
D. PROVIDE CAT-6E CABLE, JACKS, AND ACCESSORIES IN ACCORDANCE WITH THE MCPS FACILITY STANDARDS.

2.04 BOXES
A. OUTLET BOXES: GALVANIZED PRESSED STEEL WITH GALVANIZED STEEL EXTENSION RINGS OR PLASTER RINGS OR TILE RINGS TO PROVIDE EXPOSED SURFACE FLUSH WITH WALL OR CEILING FINISH. PROVIDE ALL CEILING OUTLET BOXES WITH "NO-BOLT" OR THROUGH AND LOCKNUTTED TYPE FIXTURE STUDS. WELDED JUNCTION BOXES HAVE BEEN APPROVED, IN LIEU OF STAMPED BOXES.
B. JUNCTION AND PULL BOXES: FABRICATE IN ACCORDANCE WITH NEMA AND N.E. CODE STANDARDS AND REQUIREMENTS INSOFAR AS MATERIAL, GAUGES, DIMENSIONS, AND FABRICATION METHODS. BOXES SHALL BEAR THE UL LABEL. WHERE BOXES ARE NOT SIZED ON THE DRAWINGS, THEY SHALL BE SIZED IN ACCORDANCE WITH N.E. CODE REQUIREMENTS. FINISH IN STANDARD GRAY ENAMEL, WITH SIDES AND BACK SPOT-WELDED IN POSITION AND THE REMOVABLE SCREW COVER MOUNTED WITH BRASS MACHINE SCREWS.

2.05 PANELBOARDS
A. FURNISH AND INSTALL SQUARE-D, GE, CUTTLER HAMMER, OR APPROVED EQUAL PANELBOARD DISTRIBUTION. PROVIDE TIN-PLATED COPPER BUS AND NEMA 1 ENCLOSURE (INDOOR), NEMA 3R (OUTDOOR). PROVIDE BOLT-ON MOLDED CASE CIRCUIT BREAKERS AS REQUIRED TO MATCH EXISTING. ALL PANELS SHALL BE UL LISTED.

PART 3 - EXECUTION

3.01 METHOD OF PROCEDURE
A. ERECT EQUIPMENT PARTS AT SUCH TIME AND IN SUCH MANNER AS TO MINIMIZE INTERFERENCES AND DELAYS IN THE EXECUTION OF THE WORK CARE SHALL BE USED IN THE ERECTION AND INSTALLATION OF ALL EQUIPMENT AND MATERIALS TO AVOID MARRING SURFACES OF THE WORK. DAMAGES SHALL BE REPAIRED AT NO ADDITIONAL COST TO THE OWNER.
B. PROVIDE OPENINGS THROUGH WALLS, PARTITIONS, FLOORS, AND ROOFS AS REQUIRED FOR ELECTRICAL WORK. THROUGH FLOORS, WALLS AND PARTITIONS AND SHALL BE CUT FLUSH WITH EACH SURFACE UNLESS OTHERWISE SPECIFIED. FIRE WALL AND/OR FLOOR INTEGRITY SHALL BE RESTORED AFTER PENETRATION. SLEEVES IN CONCRETE AND MASONRY WALLS, SHALL BE FABRICATED FROM STANDARD GALVANIZED STEEL PIPE WITH ENDS FINISHED SMOOTH, BURR FREE, WITHOUT SHARP EDGES.

3.02 RACEWAYS
A. GENERAL: ALL POWER AND LIGHTING CIRCUITS SHALL BE RUN IN CONCEALED METALLIC RACEWAYS EXCEPT WHERE SPECIFICALLY NOTED OTHERWISE. THESE RACEWAYS SHALL BE RUN CONCEALED IN ALL FINISHED AREAS, AND WHERE RUN EXPOSED SHALL BE SQUARE TO THE BUILDING AND HELD TIGHT TO THE BUILDING CONSTRUCTION. THE POINTS OF TERMINATION AND THE SUGGESTED ROUTING. HOWEVER, THE INSTALLER IS RESPONSIBLE FOR PROPER COORDINATION WITH BUILDING STRUCTURE AND THE WORK OF OTHER TRADES. FURNISH ALL REQUIRED BENDS, ELBOWS, FITTINGS, JUNCTION AND PULL BOXES, WHETHER OR NOT SPECIFICALLY SHOWN ON DRAWINGS, THAT MAY BE REQUIRED TO SATISFY CODES AND THE STANDARDS OF GOOD PRACTICE. WHERE CONDUITS FOR BOTH BRANCH AND FEEDER CIRCUITS ARE RUN CONCEALED, THEY MAY BE RUN OUT OF SQUARE TO THE BUILDING PROVIDING THE SHORTEST POSSIBLE RUN IS UTILIZED. RACEWAY SIZES ARE BASED ON THE USE OF COPPER CONDUCTORS AND N.E. CODE FILL.
B. GRS CONDUIT SHALL BE CUT WITH POWER OR HACKSAW AND CLEANLY REAMED TO REMOVE ALL "BURRS" AND ALL FIELD CUT THREADS SHALL BE PAINTED WITH WHITE LEAD BEFORE COUPLINGS ARE APPLIED.
C. WHERE BUILDING VENTILATION CONDITIONS ARE SUCH THAT AIR MAY FLOW CONTINUOUSLY IN CONDUITS, CAUSING CONDENSATION AND THE COLLECTION OF MOISTURE, THE CONDUITS SHALL BE SEALED AT EACH END WITH A PLIABLE X DUCT SEALING COMPOUND. ALSO SEAL ALL CONDUIT ENTERING AND LEAVING REFRIGERATED EQUIPMENT.

3.03 WIRING INSTALLATION
A. GENERAL: EXCEPT FOR SUCH ITEMS AS ARE NORMALLY WIRED AT THEIR POINT OF MANUFACTURE AND SO DELIVERED - AND UNLESS SPECIFICALLY NOTED TO THE CONTRARY HEREIN - THE ELECTRICAL TRADE SHALL DO ALL ELECTRICAL WIRING OF EVERY CHARACTER. IT IS THE INTENT OF THESE SPECIFICATIONS AND DRAWINGS THAT ALL SYSTEMS AND EQUIPMENT SHALL BE PROVIDED WITH ALL NECESSARY UTILITY CONNECTIONS, COMPLETED TO ALLOW SAFE AND PROPER OPERATION OF SAID SYSTEMS. WHEN IT IS NECESSARY FOR TRADES PERFORMING WORK COVERED BY THIS DIVISION TO MAKE FINAL CONNECTIONS TO ITEMS OF EQUIPMENT BEING FURNISHED BY OTHERS, OR BY OTHER TRADES UNDER OTHER DIVISIONS, ALL SUCH WORK SHALL BE PERFORMED IN ACCORDANCE WITH THE REQUIREMENTS OF THIS DIVISION AND ALL MATERIALS USED SHALL BE AS SPECIFIED HEREIN.
B. WIRE SIZE: MINIMUM WIRE SIZE FOR BRANCH CIRCUITS SHALL BE #12 AWG.
C. MAKE CONNECTIONS TO TERMINALS USING PRESSURE TYPE CONNECTORS. SOLDERED JOINTS ARE PROHIBITED. ALL JOINTS IN CONDUCTORS SHALL BE MADE AT AN ACCESSIBLE LOCATION WITHIN A BOX BY TWISTING THE BARE CONDUCTOR ENDS TOGETHER AND APPLYING A WIRE CONNECTOR IN ALL SIZES UP TO THE MAXIMUM CAPACITY OF THE CONNECTOR. JOINTS SHALL BE TAPED WITH AN APPROVED ELECTRICAL TAPE. SPLICES FOR CONDUCTORS LARGER THAN #1O AWG SHALL BE MADE WITH AN APPROVED COMPRESSION (SQUEEZE) CONNECTOR INSULATED WITH NOT LESS THAN TWO LAYERS OF ELECTRICAL FILL TAPE TO 1.5 TIMES THE THICKNESS OF INSULATION, FOLLOWED BY TWO (MINIMUM) LAYERS OF HALF-LAPPED ELECTRICAL TAPE FOR MECHANICAL PROTECTION. LOCATE ALL SPLICES IN BOXES OR FITTINGS OF PROPER SIZE PER N.E. CODE.
D. IDENTIFY ALL WIRES AND CABLES WITH BRADY ADHESIVE WIRE MARKERS AT EACH BOX, PANEL, AND OUTLET. IDENTIFICATION SHALL, AS A MINIMUM, INDICATE THE PANEL AND CIRCUIT SUPPLYING THE OUTLET. AT THE PANEL END, THE LOAD SERVED AND ITS LOCATION SHALL BE INDICATED. PROVIDE A MINIMUM OF 8 IN. SLACK WIRE AT EACH OUTLET FOR MAKING CONNECTION TO THE DEVICE OR TO PROVIDE FOR A FUTURE DEVICE IN THE BOX.

3.04 SYSTEM GROUNDING
A. GENERAL: EQUIPMENT, RACEWAY SYSTEMS, WIRING SYSTEM NEUTRALS, RECEPTACLES AND POWER OUTLETS, MOTORS AND MOTORIZED EQUIPMENT, SHALL BE GROUNDED IN ACCORDANCE WITH NEC ARTICLE 250.
B. GROUND RECEPTACLES AND POWER OUTLETS TO THE CONDUIT SYSTEM WITH A GREEN GROUNDING CONDUCTOR SIZE IN ACCORDANCE WITH NEC TABLE 250 AND CONNECTED BETWEEN THE DEVICE GROUNDING SCREW AND THE OUTLET BOX. CONNECTION TO THE BOX MAY BE A "G" CLIP OR BY A 10/24 SCREW THREADED INTO A HOLE IN THE BACK OF THE BOX AND USED FOR NO OTHER PURPOSE. BONDING JUMPER REQUIREMENTS MAY BE WAIVED, SUBJECT TO THE APPROVAL OF THE N.E. CODE REQUIREMENTS ENFORCING AUTHORITY, PROVIDED THE RECEPTACLE USED IS OF THE SAFETY GROUNDING TYPE LISTED BY UL AS COMPLYING WITH EXCEPTION NO. 2 OF N.E. CODE ARTICLE 250-74. EQUIPMENT CONNECTED TO THE ELECTRICAL SYSTEM SHALL BE GROUNDED WITHIN INSULATED GREEN GROUNDING CONDUCTOR SIZED IN ACCORDANCE WITH N.E. CODE TABLE 250-95 AND INSTALLED WITHIN THE RACEWAY. CONDUCTOR SHALL BE CONTINUOUS BETWEEN A GROUNDING SCREW IN THE EQUIPMENT JUNCTION B BOX AND A GROUND ATTACHMENT IN THE NEAREST OUTLET BOX IN THE RIGID METALLIC CONDUIT SYSTEM. THIS REQUIREMENT INCLUDES ALL FLEXIBLE CONDUIT.
C. GROUNDING MATERIAL:
1. GROUND CONDUCTOR - SIZE AS PER NEC REQUIREMENTS, THHN, SOFT DRAWN OR SOFT ANNEALED, COPPER WIRE
2. JOINTS AND CONNECTIONS - MOLDED FUSION WELDING PROCESS USING PROPER MOLD AND THE NUMBER, SIZE AND TYPE CARTRIDGE FOR THE JOINT OR CONNECTION. WATERPIPE CONNECTION, SILICON BRONZE APPROVED MECHANICAL CONNECTOR DESIGNED FOR THE PIPE AND CABLE TO BE BONDED.

3.05 PANELBOARD INSTALLATION
A. DIRECTORIES, AS A MINIMUM, SHALL BE TYPEWRITTEN AND INDICATE BREAKER POSITION NUMBER, EQUIPMENT SERVED, ROOM NAME AND NUMBER, AND THE PANEL IDENTIFICATION..
B. NO WATER PIPING SHALL BE ABOVE SWITCHBOARD, MCC, OR PANELS.
C. MOUNT PANELBOARDS WITH CENTERLINE AT 5 FT.-6IN. ABOVE FINISH FLOOR, EXCEPT THAT THE HIGHEST BREAKER HANDLE SHALL BE BELOW 6 FT.-5 IN. ABOVE FINISH FLOOR. ARRANGE BREAKERS SO THAT THE BREAKER RATING IS VISIBLE WITH THE PANEL FRONT IN PLACE.

3.06 CLEANING
A. THOROUGHLY CLEAN ALL PANELBOARDS, AND EQUIPMENT PROVIDED OR CONNECTED IN THIS CONTRACT. ALL SURFACES SHALL BE PROPERLY POLISHED AND SHALL BE FREE OF PAINT AND ALL OTHER DIRT OR DEBRIS. TOUCHUP OR COMPLETELY REFINISH ALL EQUIPMENT FURNISHED WITH FACTORY FINISHES THAT IS DAMAGED DURING DELIVERY OR CONSTRUCTION. PROPERLY PROTECT THE FRONTS OF ALL PANELBOARDS, SWITCHBOARDS AND SIMILAR EQUIPMENT TO PREVENT MARRING AND OTHER DEFACING.
B. AT ALL TIMES, KEEP THE PREMISES FREE FROM ACCUMULATIONS OF WASTE MATERIALS OR RUBBISH CAUSED BY THE WORK OF THE TRADESMEN DOING ELECTRICAL WORK. AT COMPLETION OF THE WORK, REMOVE ALL RUBBISH, TOOLS, EQUIPMENT, AND SURPLUS MATERIALS. BROOM CLEAN ALL ASSIGNED SPACES PRIOR TO LEAVING THE PREMISES.

END OF SECTION

GENERAL NOTES:

1. ALL ELECTRICAL WORK SHALL BE DONE ACCORDING TO THE 2014 EDITION OF THE NATIONAL ELECTRICAL CODE, THE 2023 FLORIDA BUILDING CODE, AND THE SBBC FACILITIES FACILITIES STANDARDS AND GUIDE SPECIFICATIONS.
2. ALL ELECTRICAL CONDUITS SHALL CARRY A GREEN INSULATED COPPER WIRE SIZED PER NEC UNLESS OTHERWISE INDICATED ON THE DRAWINGS. GROUND ELECTRICAL DISTRIBUTION SYSTEM IN ACCORDANCE WITH THE 2014 EDITION OF THE NEC.
3. FEEDER CONDUCTORS AND CONDUIT SIZES ARE INDICATED ON DIAGRAMS & SCHEDULES.
4. ALL WORK MUST BE IN CONFORMANCE WITH THE VOLUSIA COUNTY SCHOOL (VCS) STANDARDS.
5. CONTRACTOR SHALL RELOCATE EXISTING DEVICES AS REQUIRED TO ACCOMMODATE NEW HVAC EQUIPMENT. EXTEND CONDUITS AND WIRING AS REQUIRED.

ELECTRICAL SYMBOLS LEGEND

J	J-BOX
	HOME RUN
	NON-FUSED DISCONNECT SWITCH
	FUSED DISCONNECT SWITCH
	COMBINATION MOTOR STARTER/FUSED DISCONNECT SWITCH
	BRANCH CIRCUIT PANELBOARD, UNDER 250 VOLTS, RECESSED MOUNTED
SPD	SURGE PROTECTION DEVICE (SPD)
	NEW COMM/DATA OUTLET WITH FLUSH MOUNTED 4" SQUARE SINGLE GANGE JUNCTION BOX MOUNTED ABOVE COUNTER UNLESS NOTED OTHERWISE. EXTEND 1" CONCEALED CONDUIT TO ABOVE ACCESSIBLE CEILING AND STUB-OUT WITH PLASTIC BUSHING OR AS NOTED. INSTALL PULL WIRE.
R / S	PHOTOELECTRIC DUCT SMOKE DETECTOR, COMPLIANT WITH NFPA 90A: 6.4.4.2 R=RETURN S=SUPPLY
R	FIRE ALARM SHUTDOWN RELAY
RTI	DUCT DETECTOR REMOTE TROUBLE INDICATOR. MOUNT ADJACENT TO UNIT.
F	COMBINATION AUDIBLE/VISUAL SIGNALING UNIT- HORN/FLASHING "FIRE" LIGHT WALL MOUNTED. WP=WEATHER PROOF. A=AUDIBLE ONLY. 75 CANDELA MINIMUM.
H	FIRE ALARM HEAT DETECTOR.
S	CEILING MOUNTED FIRE ALARM SMOKE DETECTOR.
#	SHEET NOTE CALLOUT
#	REVISION REFERENCE
#	WIRE CALLOUT
	LIGHT DASHED INDICATES EXISTING FIXTURE OR DEVICE
	DARK DASHED INDICATES EXISTING FIXTURE OR DEVICE RELOCATED
	DARK SOLID INDICATES NEW FIXTURE OR DEVICE
	HATCHED ITEMS INDICATES FIXTURE OR DEVICE TO BE REMOVED OR RELOCATED
	NOT IN CONTRACT (N.I.C.)
ST	AUTOMATIC TRANSFER SWITCH
	BRANCH CIRCUIT PANELBOARD, UNDER 250 VOLTS, SURFACE MOUNTED

SHOP DRAWING SUBMITTALS

ITEM	COPY FOR OWNER REVIEW	PRODUCT DATA				SHOP DRAWINGS		TEST REPORTS		COORDINATION DRAWINGS		WIRING DIAGRAMS		O & M MANUAL	
		1	2	3	4	1	2	1	2	1	2	1	2	1	2
ELECTRICAL GEAR	X	X	X			X	X	X	X			X	X	X	X
GROUNDING DEVICES	X	X	X			X	X	X	X					X	X
CONDUIT/FITTINGS	X	X	X			X	X							X	X
FEEDERS	X	X	X			X	X	X	X					X	X
WIRING DEVICES	X	X	X		X	X	X	X	X			X	X	X	X
LIGHTING	X	X	X		X	X	X	X	X			X	X	X	X
FIRE ALARM	X	X	X			X	X	X	X	X	X	X	X	X	X

REMARKS:
1. FOR ALL MATERIALS FOR CONSTRUCTION, INSTALLATION REQUIREMENTS AND TESTING REQUIREMENTS, REFER TO CONTRACT SPECIFICATIONS.
2. BEFORE PURCHASE OR FABRICATION OF EQUIPMENT AND WITHIN 30 DAYS OF AWARD OF GENERAL CONTRACT, CONTRACTOR SHALL SUBMIT TO THE ARCHITECT/ENGINEER FOR APPROVAL, PDF COPIES OF SHOP DRAWINGS FOR ALL EQUIPMENT, LIGHTING, DEVICES, AND MATERIALS. PARTIAL OR INCOMPLETE SUBMITTALS WILL NOT BE ACCEPTED. ANY MATERIAL USED WITHOUT APPROVAL WILL BE REJECTED. SUBMIT SHOP DRAWINGS TO MECHANICAL AND PLUMBING CONTRACTOR FOR APPROVAL AND COORDINATION.
3. AN OPERATING MANUAL AND MAINTENANCE MANUAL SHALL BE PROVIDED TO THE BUILDING OWNER, WITHIN 90 DAYS OF THE DAY OF RECEIVING THE CERTIFICATE OF OCCUPANCY, PER 7TH EDITION OF THE FLORIDA BUILDING CODE - ENERGY CONSERVATION C408.3.2.2.
INCLUDE AT A MINIMUM THE FOLLOWING:
a) SUBMITTAL DATA STATING EQUIPMENT RATING AND SELECTED OPTIONS FOR EACH PIECE OF EQUIPMENT REQUIRING MAINTENANCE.
b) OPERATION MANUALS AND MAINTENANCE MANUALS FOR EACH PIECE OF EQUIPMENT REQUIRING MAINTENANCE. REQUIRED ROUTINE MAINTENANCE ACTIONS SHALL BE CLEARLY IDENTIFIED.
c) NAMES AND ADDRESSES OF AT LEAST ONE QUALIFIED SERVICE AGENCY.
5. ELECTRICAL GEAR INCLUDES ALL SWITCHBOARDS, PANELBOARDS, TRANSFORMERS, SURGE PROTECTION DEVICES, MOTOR CONTROLLERS, DISCONNECTS, ETC.
6. CONTRACTOR SHALL SUBMIT ALL ITEMS UNDER ONE SUBMITTAL THAT REFERENCES DDC PROJECT NUMBER. NO PARTIAL SUBMITTALS WILL BE ACCEPTED.

SUBMITTAL TYPE:
1. FOR REVIEW
2. FOR RECORD
3. COLOR SELECTION
4. SAMPLE

CODE COMPLIANCE REQUIREMENTS

ALL WORK SHALL BE IN COMPLIANCE WITH THE FOLLOWING CODES, BUT NOT LIMITED TO:
8TH EDITION OF THE 2023 FLORIDA BUILDING CODE - BUILDING (FBCB)
8TH EDITION OF THE 2023 FLORIDA BUILDING CODE - EXISTING BUILDING (FBCEB)
8TH EDITION OF THE 2023 FLORIDA BUILDING CODE - ACCESSIBILITY (FBCA)
8TH EDITION OF THE 2023 FLORIDA BUILDING CODE - ENERGY CONSERVATION (FBCEC)
8TH EDITION OF THE 2023 FLORIDA BUILDING CODE - MECHANICAL (FBCM)
8TH EDITION OF THE 2023 FLORIDA BUILDING CODE - PLUMBING (FBCP)
8TH EDITION OF THE 2023 FLORIDA BUILDING CODE - FUEL GAS (FBCFG)
8TH EDITION OF THE 2023 FLORIDA FIRE PREVENTION CODE (FFPC)
NFPA 70 - 2020 NATIONAL ELECTRICAL CODE (NEC)
2014 STATE REQUIREMENTS FOR EDUCATIONAL FACILITIES (SREF)
MARION COUNTY PUBLIC SCHOOLS STANDARDS

ABBREVIATIONS

A	AMPERES	KCMIL	THOUSAND OF CIRCULAR MILS
AC	ALTERNATING CURRENT OR AIR CONDITIONER	KVA	KILOVOLT-AMPERES
ADA	AMERICANS W/ DISABILITIES ACT	KW	KILOWATT
AFC	ABOVE FINISHED COUNTER	LTG	LIGHTING
AFF	ABOVE FINISHED FLOOR	MCM	THOUSANDS OF CIRCULAR MILS
AFG	ABOVE FINISHED GRADE	MCB	MAIN CIRCUIT BREAKER
AHU	AIR HANDLING UNIT	MCP	MOTOR CIRCUIT PROTECTION
AIC	AMPS INTERRUPTING CAPACITY	MCU	MASTER OR MOTOR CONTROL UNIT
AWG	AMERICAN WIRE GAUGE	MH	METAL HALIDE
C	CONDUIT	MLO	MAIN LUG ONLY
CATV	CABLE TELEVISION	N	NEUTRAL
CH	COUNTER HEIGHT	NA	NOT APPLICABLE
COND	CONDUIT	NEC	NATIONAL ELECTRIC CODE
CU	COPPER OR CONDENSER UNIT	NEMA	NATIONAL ELECTRICAL MANUFACTURERS ASS.
DISC	DISCONNECT	NF	NON-FUSED
ECB	ENCLOSED CIRCUIT BREAKER	NFPA	NATIONAL FIRE PROTECTION ASSOCIATION
EF	EXHAUST FAN	NIC	NOT IN CONTRACT
ELEC	ELECTRICAL	NL	NIGHT LIGHT
EM	EMERGENCY	O.C.	ON CENTER
EMS	ENERGY MANAGEMENT SYSTEM	P	POLE
EMT	ELECTRICAL METALLIC TUBING	PNL	PANELBOARD
ETR	EXISTING TO REMAIN	PVC	POLYVINYL CHLORIDE
EWC	ELECTRIC WATER COOLER	RGS	RIGID GALVANIZED STEEL
EWH	ELECTRIC WATER HEATER	RM	ROOM
EX	EXISTING	RTU	ROOF TOP UNIT
EXIST	EXISTING	SPEC	SPECIFICATION
FA	FIRE ALARM	SS	SUPER SAVER OR STAINLESS STEEL
FACP	FIRE ALARM CONTROL PANEL	TBB	TELEPHONE/COMPUTER TERMINAL BOARD
G	GROUND	TYP	TYPICAL
GFI	GROUND FAULT INTERRUPTER	UON	UNLESS OTHERWISE NOTED
GND	GROUND	V	VOLTS
GRC	GALVANIZED RIGID CONDUIT	VAV	VARIABLE AIR VOLUME
HVAC	HEATING, VENTILATING AND AIR CONDITIONING	VFD	VARIABLE FREQUENCY DRIVE
J	JUNCTION	W	WIRE
KAIC	(THOUSAND) AMPERE INTERRUPTING CAPACITY	WP	WEATHERPROOF

GENERAL DEMOLITION NOTES

A. THE CONTRACTOR SHALL VISIT AND CAREFULLY EXAMINE THOSE PORTIONS OF THE BUILDING AND SITE AFFECTED BY THIS WORK BEFORE SUBMITTING PROPOSAL SO AS TO BECOME FAMILIAR WITH EXISTING WORK. SUBMISSION OF A PROPOSAL WILL BE CONSTRUED AS EVIDENCE THAT SUCH EXAMINATION HAS BEEN MADE AND LATER CLAIMS FOR LABOR, EQUIPMENT OR MATERIALS REQUIRED BECAUSE BY DIFFICULTIES ENCOUNTERED WILL NOT BE RECOGNIZED. IT IS TO BE UNDERSTOOD THAT UNFORESEEN CONDITIONS PROBABLY EXIST AND NEW WORK MAY NOT BE FIELD LOCATED EXACTLY AS SHOWN ON THE DRAWINGS. COOPERATION WITH OTHER TRADES IN EQUIPMENT ROUTING AS DETERMINED DURING CONSTRUCTION AND AS DIRECTED BY THE ARCHITECT/ENGINEER MAY BE NECESSARY AND IT IS INTENDED THAT SUCH DEVIATIONS SHALL BE CONSIDERED AS PART OF THIS CONTRACT. IT IS ALSO UNDERSTOOD THAT THE PLANS ARE NOT COMPLETELY TO SCALE. THIS CONTRACTOR IS TO FIELD VERIFY DIMENSIONS OF ALL EXISTING CONDITIONS, PRIOR TO BID AND INCLUDE ANY DEVIATIONS IN THE CONTRACT.
B. ALL DEVICES AND EQUIPMENT NOT SHOWN AND IN AREAS OUTSIDE OF REMODELING SHALL REMAIN ACTIVE UNLESS OTHERWISE NOTED. INSTALL AS REQUIRED TO MAINTAIN CONTINUITY AND POWER CONNECTIONS TO EXISTING DEVICES AND EQUIPMENT THAT ARE TO REMAIN.
C. ALL EQUIPMENT AND MATERIAL REMOVED AND NOT REUSED SHALL BE TURNED OVER TO THE OWNER OR AT THE OWNERS REQUEST LEGALLY DISPOSED OF BY THE CONTRACTOR.
D. ALL ELECTRICAL DEVICES THAT ARE REMOVED SHALL BE REMOVED AS DIRECTED BY THE OWNER, AND CEILING OR WALL SHALL BE PATCHED TO MATCH EXISTING OR NEW FINISH. ALL PATCHES OR CEILING PLATES SHALL BE PATCHED AND PAINTED AS DIRECTED BY ARCHITECTURAL DRAWINGS.
E. ALL EXISTING ELECTRICAL EQUIPMENT IS NOT SHOWN. IT IS THE CONTRACTORS RESPONSIBILITY TO BECOME FAMILIAR WITH ALL EXISTING CONDITIONS PRIOR TO BID, AND INCLUDE IN HIS BID THE REMOVAL OF ALL EQUIPMENT, CONDUIT, WIRE, ETC. THAT IS NOT BEING REUSED BACK TO ITS SOURCE.
F. ALL CONCRETE, WALL PATCHING, CEILING REPAIR, AND OTHER GENERAL WORK REQUIRED FOR INSTALLING THE ELECTRICAL SYSTEMS AND TO REPAIR TO "LIKE NEW CONDITION" TO BE PROVIDED AND INSTALLED BY THE CONTRACTOR.
G. PROVIDE AND INSTALL ANY ADDITIONAL HANGERS/SUPPORTS REQUIRED TO ACCOMMODATE ANY EQUIPMENT RELOCATIONS.
H. COORDINATE ALL CEILING MOUNTED DEVICES WITH ARCHITECTURAL REFLECTED CEILING AND WORK OF ALL OTHER TRACES.
I. FOR NEW ELECTRICAL DEVICES WITHIN EXISTING WALL PARTITIONS, CONTRACTOR SHALL BE PERMITTED TO USE CONCEALED METAL CLAD CABLE. PROVIDE SUBMITTAL PRIOR TO ROUGH-IN.
J. ITEMS NOTED AS EXISTING TO BE REMOVED SHALL BE REMOVED COMPLETE. REMOVAL SHALL INCLUDE CONDUIT AND WIRE BACK TO BRANCH PANEL.
K. FOR ALL PANELS AFFECTED BY RENOVATION, CONTRACTOR SHALL TRACK ALL EXISTING CIRCUITS AND REMOVE WIRING AND CONDUIT BACK TO PANEL FOR CIRCUITS NO LONGER IN USE. PROVIDE NEW TYPED PANEL DIRECTORY AND RELABEL ALL UNUSED CIRCUIT BREAKERS AS SPARE.
L. THE WORK SHALL INCLUDE REVISIONS, DEMOLITION, MODIFICATIONS AND REWORK OF THE EXISTING FACILITY AND SYSTEMS AS REQUIRED FOR INSTALLATION OF NEW WORK, AND FOR CONNECTIONS BETWEEN EXISTING WORK AND NEW WORK WHERE REQUIRED. THE WORK SHALL ALSO INCLUDE THE COMPLETION OF ELECTRICAL POWER AND CONTROL CIRCUITS, FOR DEVICES AND EQUIPMENT THAT ARE TO REMAIN IN SERVICE, IF THE CIRCUITS ARE BROKEN BY DEMOLITION WORK, OR BY THE REMOVAL OR CUTTING OF EXISTING BUILDING CONSTRUCTION, EXISTING DEVICES OR EQUIPMENT. EXISTING CONDUIT WIRING SHALL BE REROUTED AND CONNECTED WHERE NECESSARY.

ddc engineering inc.
4083 South U.S. Highway 1, Ste. 101
Rockledge, Florida 32955
Phone 321.633.4522 Fax 321.633.4528
www.ddc-engineers.com
dasilva.david@ddc-engineers.com
C.O.A.: 25988
DDC PROJECT NO.: 25007.01

David A. DaSilva
54739

THIS ITEM HAS BEEN DIGITALLY SIGNED AND SEALED BY DAVID A. DASILVA ON THE DATE ADJACENT TO THE SEAL. PRINTED COPIES OF THIS DOCUMENT ARE NOT CONSIDERED SIGNED AND SEALED AND THE SIGNATURE MUST BE VERIFIED ON ANY ELECTRONIC COPIES.

REVISIONS
DOCUMENT HISTORY

NO.	DATE	DESCRIPTION

HOLLY HILL SCHOOL
REPLACE BOILER
VCS Project NO. 2648219
1500 CENTER AVENUE,
HOLLY HILL, FL. 32117

ENGINEER OF RECORD
ENGINEER
DAVID A. DASILVA

DESIGNED BY	DRAWN BY
DAD	IO/HR
ISSUE DATE	AE PROJECT NUMBER
03/27/2026	25007.01

SHEET TITLE
ELECTRICAL
LEGEND & NOTES

DRAWING NO.
E001

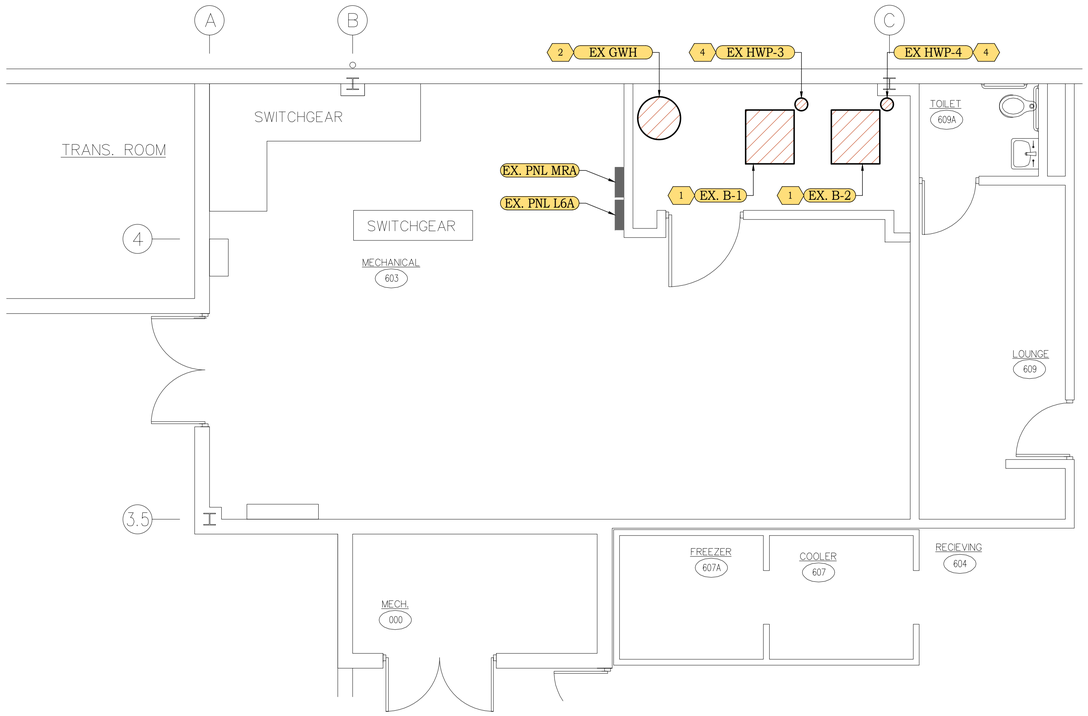

ELECTRICAL DEMOLITION PLAN

1/4" = 1'-0"

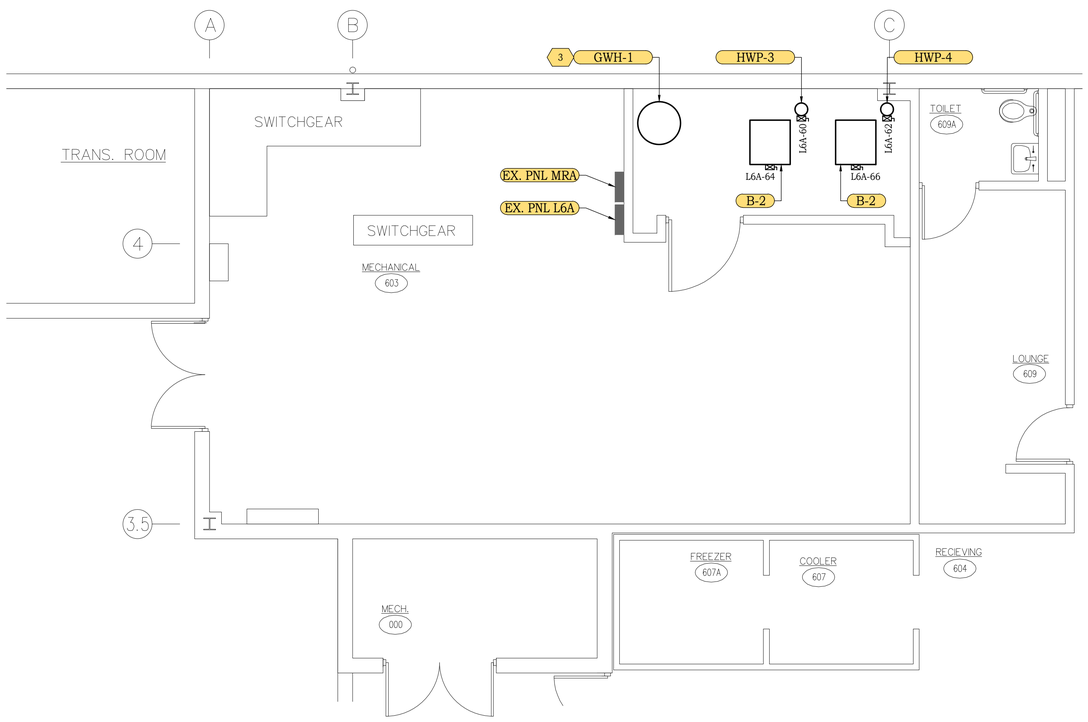

ELECTRICAL PLAN

1/4" = 1'-0"

PLAN NOTES

1. EXISTING BOILER SHALL BE REMOVED AND REPLACED WITH NEW. CONTRACTOR SHALL REMOVE ALL ASSOCIATED DEVICES, CONDUITS, WIRING, ETC., BACK TO SOURCE PANEL MRA. RE-LABEL UN-USED CIRCUIT AS SPARE. PROVIDE NEW TYPE WRITTEN PANEL DIRECTORY.
2. EXISTING WATER HEATER SHALL BE REMOVED AND REPLACED WITH NEW. EXISTING GAS WATER HEATER IS PLUGGED INTO EXISTING RECEPTACLE IN ROOM.
3. NEW WATER HEATER SHALL BE PLUGGED INTO EXISTING RECEPTACLE WITHIN ROOM.
4. EXISTING BOILER PUMP SHALL BE REMOVED AND REPLACED WITH NEW. CONTRACTOR SHALL REMOVE ALL ASSOCIATED DEVICES, CONDUITS, WIRING, ETC., BACK TO SOURCE PANEL MRA. RE-LABEL UN-USED CIRCUIT AS SPARE. PROVIDE NEW TYPE WRITTEN PANEL DIRECTORY.

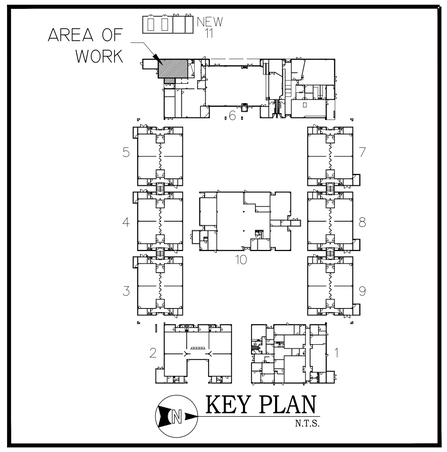

KEY PLAN

N.T.S.

ddc engineering inc
4083 South U.S. Highway 1, Ste. 101
Rockledge, Florida 32955
Phone 321.633.4522 Fax 321.633.4528
www.ddc-engineers.com
dasilva.david@ddc-engineers.com
C.O.A.: 25988
DDC PROJECT NO.: 25007.01

David A. DaSilva
54739

THIS ITEM HAS BEEN DIGITALLY SIGNED AND SEALED BY DAVID A. DASILVA ON THE DATE ADJACENT TO THE SEAL. PRINTED COPIES OF THIS DOCUMENT ARE NOT CONSIDERED SIGNED AND SEALED AND THE SIGNATURE MUST BE VERIFIED ON ANY ELECTRONIC COPIES.

REVISIONS

DOCUMENT HISTORY

NO.	DATE	DESCRIPTION

HOLLY HILL SCHOOL
REPLACE BOILER
VCS Project NO. 2648219
1500 CENTER AVENUE,
HOLLY HILL, FL. 32117

ENGINEER OF RECORD
ENGINEER
DAVID A. DASILVA

DESIGNED BY	DRAWN BY
DAD	IO/HR
ISSUE DATE 03/27/2026	AE PROJECT NUMBER 25007.01

SHEET TITLE
ELECTRICAL PLANS

DRAWING NO.
E100

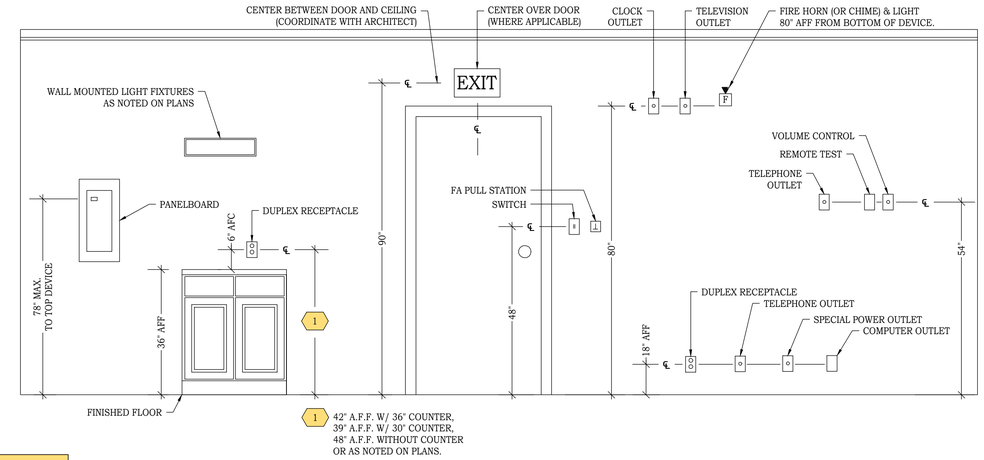

E1 MOUNTING HEIGHT DETAIL

N.T.S. E-D100

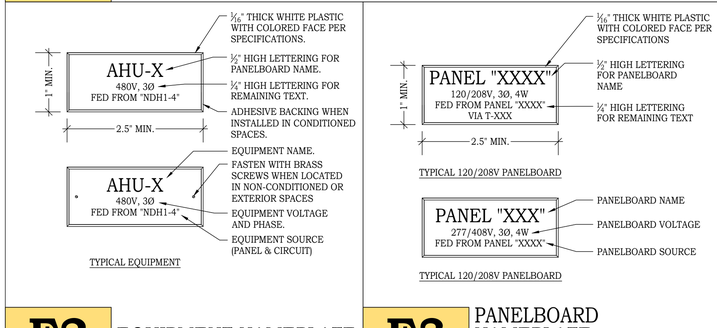

E2 EQUIPMENT NAMEPLATE

N.T.S. E-D101

E3 PANELBOARD NAMEPLATE

N.T.S. E-D102

E4 DEVICE COVERPLATE

N.T.S. E-D102

ddc engineering inc
4083 South U.S. Highway 1, Ste. 101
Rockledge, Florida 32955
Phone 321.633.4522 Fax 321.633.4528
www.ddc-engineers.com
dasilva.david@ddc-engineers.com
C.O.A.: 25988
DDC PROJECT NO.: 25007.01

David A. DaSilva
54739

THIS ITEM HAS BEEN DIGITALLY SIGNED AND SEALED BY DAVID A. DASILVA ON THE DATE ADJACENT TO THE SEAL. PRINTED COPIES OF THIS DOCUMENT ARE NOT CONSIDERED SIGNED AND SEALED AND THE SIGNATURE MUST BE VERIFIED ON ANY ELECTRONIC COPIES.

REVISIONS

NO.	DATE	DESCRIPTION

HOLLY HILL SCHOOL
REPLACE BOILER
VCS Project NO. 2648219
1500 CENTER AVENUE,
HOLLY HILL, FL. 32117

ENGINEER OF RECORD
ENGINEER
DAVID A. DASILVA

DESIGNED BY	DRAWN BY
DAD	IO
ISSUE DATE	AE PROJECT NUMBER
03/27/2026	25007.01

SHEET TITLE
ELECTRICAL DETAILS

DRAWING NO.
E500

PANEL: L6A (EXISTING)

PANEL TYPE:	EXISTING SIEMENS	BUS AMP RATING:	250 A	VOLTAGE:	120/208	LUG LOCATION:	EXISTING
PANEL LOCATION:	MECH. RM 603	MAIN AMP RATING:	225 A	PHASE:	3	MOUNTING:	EXISTING SURFACE
FED FROM SOURCE:	MDP	MAIN TYPE:	MLO	WIRE:	4	AIC RATING:	EXISTING

CKT NO.	EQUIP NO.	TYPE	EQUIPMENT SERVED	NOTES	KVA	CKT. BKR. POLE/TR	BRANCH CKT Ø	N	GND	C	Ø	CKT NO.	EQUIP NO.	TYPE	EQUIPMENT SERVED	NOTES	KVA	CKT. BKR. POLE/TR	BRANCH CKT Ø	N	GND	C
1											A	2		(E)	SPARE			1/20				
3											B	4		(E)	SPARE			1/20				
5											C	6		(E)	SPARE			1/20				
7											A	8		(E)	SPARE			3/40				
9											B	10										
11											C	12										
13											A	14		(E)	SPARE			3/30				
15											B	16										
17											C	18										
19											A	20		(E)	SPARE			3/30				
21											B	22										
23											C	24										
25											A	26		(E)	SPARE			1/20				
27											B	28		(E)	SPARE			1/20				
29											C	30		(E)	SPARE			1/20				
31											A	32										
33											B	34										
35											C	36										
37		(E)	SPARE			1/20					A	38		(E)	SPARE			1/20				
39		(E)	SPARE			1/20					B	40		(E)	SPARE			1/20				
41		(E)	SPARE			1/20					C	42		(E)	SPARE			1/20				
43		(E)	SPARE			1/20					A	44		(E)	SPARE			1/20				
45		(E)	SPARE			1/20					B	46		(E)	SPARE			1/20				
47		(E)	SPARE			1/20					C	48		(E)	SPARE			1/20				
49		(E)	SPARE			1/20					A	50		(E)	SPARE			1/20				
51		(E)	SPARE			1/20					B	52		(E)	SPARE			1/20				
53		(E)	SPARE			1/20					C	54		(E)	SPARE			1/20				
55		(E)	SPARE			1/20					A	56		(E)	SPARE			1/20				
57		(E)	SPARE			1/20					B	58		(E)	SPARE			1/20				
59		(E)	SPARE			1/20					C	60		H **	HWP-3	HACR	1.92	1/20	12	12	12	3/4"
61		(E)	SPD		0.0	3/30	EXISTING				A	62		H **	HWP-4	HACR	1.92	1/20	12	12	12	3/4"
63											B	64		H **	B-1	HACR	1.92	1/20	12	12	12	3/4"
65											C	66		H **	B-2	HACR	1.92	1/20	12	12	12	3/4"

EQUIPMENT SERVED	CONN. LOAD	LF	DF	DESIGN LOAD
HVAC/EWH	7.68		1.00	7.68
			TOTAL	7.68 KVA
			AMPS	21

NOTES:
- TC - WIRE THROUGH CONTACTOR
- HACR - HACR TYPE BREAKER
- LO - LOCKOUT BREAKER
- GFCI - GND FAULT CURRENT INTERRUPT CIRCUIT BREAKER
- IG - ISOLATED GROUND
- WIF - WALK IN FREEZER
- WIC - WALK IN COOLER

CONNECTION TYPE
- R - RECEPTACLE
- L - LIGHTING
- H - HVAC/EWH
- K - KITCHEN EQUIPMENT
- M - MISC.
- (E) - EXISTING

REMARKS:
- PROVIDE NEW TYPE WRITTEN DIRECTORY.
- CONTRACTOR SHALL CONFIRM HVAC CIRCUIT BREAKER REQUIREMENTS BEFORE PURCHASING.
- HEAT/COOLING LOADS ARE MUTUALLY EXCLUSIVE.
** CONTRACTOR SHALL USE EXISTING SPARE CIRCUIT BREAKERS TO SERVE NEW LOADS INDICATED.

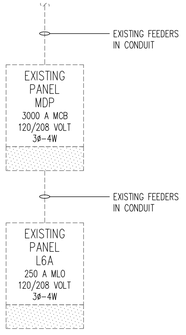

ELECTRICAL ONE-LINE DIAGRAM
N.T.S.

ddc engineering inc
4083 South U.S. Highway 1, Ste. 101
Rockledge, Florida 32955
Phone 321.633.4522 Fax 321.633.4528
www.ddc-engineers.com
dasilva.david@ddc-engineers.com
C.O.A.: 25988
DDC PROJECT NO.: 25007.01

David A. DaSilva
54739

THIS ITEM HAS BEEN DIGITALLY SIGNED AND SEALED BY DAVID A. DASILVA ON THE DATE ADJACENT TO THE SEAL. PRINTED COPIES OF THIS DOCUMENT ARE NOT CONSIDERED SIGNED AND SEALED AND THE SIGNATURE MUST BE VERIFIED ON ANY ELECTRONIC COPIES.

REVISIONS

NO.	DATE	DOCUMENT HISTORY DESCRIPTION

HOLLY HILL SCHOOL
REPLACE BOILER
VCS Project NO. 2648219
1500 CENTER AVENUE,
HOLLY HILL, FL. 32117

ENGINEER OF RECORD
ENGINEER
DAVID A. DASILVA

DESIGNED BY	DRAWN BY
DAD	IO
ISSUE DATE 03/27/2026	AE PROJECT NUMBER 25007.01

SHEET TITLE
ELECTRICAL SCHEDULE & ONE-LINE DIAGRAM

DRAWING NO.
E600

GAS WATER HEATER (NG TYPE)

MARK	STORAGE GALLONS	STORAGE TEMP	BTUH	VENT SIZE	EXHAUST	VOLTAGE	RECOVERY (GPM) @ 100°F	MANUFACTURE / MODEL	NOTE
GWH-1	90	110	199,000	3"Ø	3"Ø	120/1	232	LOCHINVAR SHIELD SWR200N	SEE BELOW

NOTES: PROVIDE THE FOLLOWING:
-ASME RATED
-PROVIDE MAXITOL PRESSURE REDUCER (COORDINATE W/SUPPLIER)
-GFI POWER SUPPLY
-ELECTRONIC IGNITION

-PROVIDE STAINLESS STEEL VENT PIPING TO EXISTING
-PROVIDE 3" INTAKE VENT
-FLAME SENSOR
-MANUAL RESET
-THERMAL EFFICIENCY 96%

ACCEPTABLE MANUFACTURES: BOCK 60HEC-199

NOTE: PUMP SIZING BASED ON HEAT EXCHANGER HEAD LOSS, 30 FEET OF PIPING AND SIX (6) 90° ELBOWS.

PLUMBING SYMBOLS LEGEND, NOTES, AND REQUIREMENTS

PLUMBING LEGEND

SS	SANITARY WASTE PIPING
CW	COLD WATER PIPING
HW	HOT WATER PIPING
HWR	(TEMPERED) HOT WATER RECIRCULATION PIPING
CD	CONDENSATE
SD	STORM DRAIN
V	VENT PIPING
G	GAS PIPING
ECO/FCO	EXTERIOR CLEAN OUT AND FLOOR CLEAN OUT
WCO	WALL CLEANOUT
FD-	FLOOR DRAIN
FS-	FLOOR SINK
	GATE VALVE OR BALL VALVE
	MIXING VALVE
	CALIBRATING BALANCING VALVE
	BUTTERFLY VALVE
	STRAINER
	CONTROL VALVE
	UNION
	CHECK VALVE
	CONNECTION, BOTTOM
	CONNECTION, TOP
	WATER HAMMER ARRESTOR

MISCELLANEOUS

#	SHEET NOTE CALLOUT
#	REVISION REFERENCE
	LIGHT DASHED INDICATES EXISTING FIXTURE OR DEVICE
	DARK DASHED INDICATES EXISTING FIXTURE OR DEVICE RELOCATED
	DARK SOLID INDICATES NEW FIXTURE OR DEVICE
	HATCHED ITEMS INDICATES FIXTURE OR DEVICE TO BE REMOVED OR RELOCATED
	NOT IN CONTRACT (N.I.C.)
	POINT OF CONNECTION
	POINT OF DISCONNECT
EWH-	EQUIPMENT TAG

ABBREVIATIONS

ABV	- ABBREVIATION	LIQ	- LIQUID
AFF	- ABOVE FINISHED FLOOR	LP	- LIQUID PROPANE
AFG	- ABOVE FINISHED GRADE	MAX	- MAXIMUM
AW	- ACID WASTE	MBH	- THOUSAND BTU PER HOUR
AWS	- ACID WASTE STACK	MCA	- MINIMUM CIRCUIT AMPACITY
AVS	- ACID VENT STACK	MECH	- MECHANICAL
BOP	- BOTTOM OF PIPE	MEZZ	- MEZZANINE
BHP	- BRAKE HORSE POWER	MIN	- MINIMUM
BTH	- BRITISH THERMAL UNIT	MTD	- MOUNTED
CAP	- CAPACITY	NC	- NORMALLY CLOSED
CD	- CONDENSATE DRAIN	NFPA	- NATIONAL FIRE PROTECTION ASSOCIATION
COMB	- COMBINATION	NO	- NORMALLY OPEN
CONN	- CONNECTION	NOM	- NOMINAL
CONT	- CONTINUE	NTS	- NOT TO SCALE
CW	- COLD WATER	OC	- ON CENTER
DIA	- DIAMETER	OW	- OILY WASTE
DN	- DOWN	PH	- PHASE
DWG	- DRAWING	POC	- POINT OF CONNECTION
ECO	- EXTERIOR CLEAN OUT	PRESS	- PRESSURE
EFF	- EFFICIENCY	PRV	- PRESSURE REDUCING VALVE
ENT	- ENTERING	PSI	- POUNDS PER SQUARE INCH
EWC	- ELECTRIC WATER COOLER	PSIG	- PSI GAUGE
EWS	- EMERGENCY EYEWASH/SHOWER	PVC	- POLYVINYL CHLORIDE PIPE
EWT	- ENTERING WATER TEMPERATURE	QTY	- QUANTITY
EXP	- EXPANSION	RAD	- REFRIGERANT AIR DRYER
F	- FAHRENHEIT	RD	- ROOF DRAIN
FA	- FIRE ALARM	REF	- REFRIGERANT
FL	- FLOOR	RL	- RAIN LEADER
FLA	- FULL LOAD AMPS	RPM	- REVOLUTIONS PER MINUTE
FLO	- FLOOR CLEAN OUT	RLA	- RATED LOAD AMPS
FD	- FLOOR DRAIN	SH	- SHOWER
FS	- FLOOR SINK	SOV	- SHUT OFF VALVE
FT	- FEET	SP	- STATIC PRESSURE
GA	- GAUGE	SRD	- SECONDARY ROOF DRAIN
GAL	- GALLON	SS	- SANITARY SEWER OR STAINLESS STEEL
GALV	- GALVANIZED	ST	- STORM DRAIN
GPM	- GALLONS PER MINUTE	TEMP	- TEMPERATURE
GW	- GREASE WASTE	TP	- TRAP PRIMER
GWH	- GAS WATER HEATER	TYP	- TYPICAL
HB	- HOSE BIBB	UG	- UNDER GROUND
HP	- HORSE POWER	UON	- UNLESS OTHERWISE NOTED
HR	- HOUR	V	- VENT
HW	- HOT WATER	VEL	- VELOCITY
HWR	- HOT WATER RETURN	VLV	- VALVE
HWS	- HOT WATER SUPPLY	VSD	- VARIABLE SPEED DRIVE
IE	- INVERT ELEVATION	VTR	- VENT THRU ROOF
IN	- INCHES	W	- WASTE
IW	- INDIRECT WASTE	WCO	- WALL CLEAN OUT
KW	- KILOWATT	WH	- WALL HYDRANT
LF	- LINEAR FOOT	WHA	- WATER HAMMER ARRESTER
LWT	- LEAVING WATER TEMPERATURE	W/TP	- WITH TRAP PRIMER

SHOP DRAWING SUBMITTALS

ITEM	COPY FOR OWNER REVIEW	PRODUCT DATA 1	PRODUCT DATA 2	PRODUCT DATA 3	PRODUCT DATA 4	SHOP DRAWINGS 1	SHOP DRAWINGS 2	TEST REPORTS 1	TEST REPORTS 2	COORDINATION DRAWINGS 1	COORDINATION DRAWINGS 2	WIRING DIAGRAMS 1	WIRING DIAGRAMS 2	O & M MANUAL 1	O & M MANUAL 2
ALL PLUMBING EQUIPMENT	X	X	X			X	X	X	X	X	X	X	X	X	X
PIPING / FITTINGS	X	X	X			X	X							X	X
INSULATION	X	X	X			X	X							X	X
ALL FIXTURES	X	X	X			X	X							X	X
WATER HEATER	X	X	X			X	X					X	X	X	X
PUMPS / CONTROLS	X	X	X			X	X					X	X	X	X
HANGERS / SUPPORTS	X	X	X			X	X							X	X

NOTES:
1- FOR REVIEW
2- FOR RECORD
3- COLOR SELECTION
4- SAMPLE

NOTE:
FOR ALL MATERIALS FOR CONSTRUCTION, INSTALLATION REQUIREMENTS AND TESTING REQUIREMENTS, REFER TO CONTRACT SPECIFICATIONS.

CONTRACTOR SHALL SUBMIT ALL ITEMS UNDER ONE SUBMITTAL THAT REFERENCES DDC PROJECT NUMBER. NO PARTIAL SUBMITTALS WILL BE ACCEPTED. ALL SUBMITTALS SHALL BE EMAILED TO INFO@DDC-ENGINEERS.COM .

PLUMBING REQUIREMENTS

PROVIDE THE FOLLOWING:
SCOPE OF WORK
CONTRACTOR SHALL PROVIDE ALL LABOR AND MATERIALS AS REQUIRED TO PROVIDE A COMPLETE AND OPERATIONAL PLUMBING SYSTEMS AS INDICATED ON THE DRAWINGS. CONTRACTOR SHALL COORDINATE ALL HIS WORK WITH ALL OTHER TRADES. CONTRACTOR SHALL REVIEW SPECIFICATIONS PERTAINING TO THIS PROJECT.

SPECIAL PROVISIONS
ALL WORK SHALL BE IN COMPLIANCE WITH THE 2023 FLORIDA BUILDING CODE (8TH EDITION), 2023 FLORIDA BUILDING CODE - PLUMBING (8TH EDITION), 2023 FLORIDA ENERGY CONSERVATION CODE (8TH EDITION), ORDINANCES AND REGULATIONS OF THE LOCAL AUTHORITY HAVING JURISDICTION.

SHOP DRAWINGS
BEFORE PURCHASE OR FABRICATION OF EQUIPMENT AND WITHIN 30 DAYS OF AWARD OF GENERAL CONTRACT, CONTRACTOR SHALL SUBMIT TO THE ARCHITECT/ENGINEER FOR APPROVAL, 3 COPIES OF SHOP DRAWINGS FOR ALL EQUIPMENT AND MATERIALS. SHOP DRAWINGS SHALL INDICATE WORKING AND ERECTION DIMENSIONS, ELECTRICAL CHARACTERISTICS (VOLTS, PHASE AND AMPS), LOCATION AT WHICH MATERIALS AND EQUIPMENT ARE TO BE INSTALLED AND OTHER ESSENTIAL DATA. PARTIAL OR INCOMPLETE SUBMITTALS WILL NOT BE ACCEPTED. ANY MATERIAL USED WITHOUT APPROVAL WILL BE REJECTED. PROVIDE SUBMITTALS ON ALL ITEMS EXCEPT PIPING. SUBMIT SHOP DRAWINGS TO ELECTRICAL CONTRACTOR FOR APPROVAL AND COORDINATION.

MATERIALS
MATERIALS, UNLESS OTHERWISE NOTED, SHALL BE NEW, FREE OF DEFECTS AND IN ACCORD WITH FOLLOWING SCHEDULES AND PARAGRAPHS. THE APPROVAL OF ANY MATERIALS WILL NOT BE CONSIDERED AS ACCEPTANCE OF WORK WHERE INSTALLED IF SUCH MATERIALS PROVE DEFECTIVE. WHERE NO SPECIFIC WEIGHTS OR GRADES ARE SPECIFIED, MATERIALS SHALL BE OF THE GENERALLY ACCEPTED STANDARD WEIGHT AND GRADE.

DRAIN, WASTE AND VENT PIPING
SANITARY PIPING SHALL BE SCHEDULE 40 PVC IN CONFORMANCE WITH ASTM F1488.
NOTE: ALL RELIEF DRAINS FROM HEATERS TO BE COPPER.

WATER SYSTEM (DOMESTIC PIPING)
ABOVE GROUND WATER PIPING SHALL BE TYPE "L" COPPER WITH SWEATED CONNECTIONS. BELOW GROUND PIPING SHALL BE TYPE "K" COPPER WITH SWEATED CONNECTIONS. PIPING SHALL BE IN CONFORMANCE WITH ASTM B88
A. SOLDER JOINTS WITH FREE FLOWING SOFT LEAD FREE SOLDER (95%) PER ASTM B32
B. PIPING SHALL BE TESTED HYDROSTATICALLY AT A PRESSURE OF 150 PSIG.
C. AFTER COMPLETION OF WORK, THE PIPING SHALL BE FLUSHED AND STERILIZED IN ACCORDANCE WITH THE FLORIDA BUILDING CODE.
D. INSULATE ALL HOT WATER PIPING WITH 1 ½" FIBERGLASS INSULATION.

INSTALLATION PIPE SHALL BE CUT ACCURATELY TO MEASUREMENTS ESTABLISHED AT THE JOB SITE AND WORKED INTO PLACE WITHOUT FORCING, PROPERLY CLEARING ALL WINDOWS, DOORS, AND OTHER OPENINGS. PIPES SHALL HAVE BURRS REMOVED BY REAMING AND SHALL BE SO INSTALLED AS TO PERMIT FREE EXPANSION AND CONTRACTION WITHOUT DAMAGE TO JOINTS OR HANGERS.

GAS PIPING
SCHEDULE 40 BLACK IRON PIPE & FITTINGS. PAINT PIPING YELLOW AND LABEL.

OPERATION AND MAINTENANCE INSTRUCTION
COMPLETE OPERATING AND MAINTENANCE INSTRUCTIONS MANUALS FOR EACH PIECE OF EQUIPMENT, BOUND IN BOOK FORM, SHALL BE PREPARED. OPERATING INSTRUCTIONS EXPLAINING PREVENTIVE MAINTENANCE PROCEDURES, METHODS OF CHECKING THE SYSTEM FOR NORMAL SAFE OPERATION, AND PROCEDURE FOR SAFELY STARTING AND STOPPING THE SYSTEM SHALL BE PREPARED AND INCLUDED WITH THE MANUALS.

GUARANTEE AND WARRANTIES
A. FURNISH OWNER WITH A WRITTEN GUARANTEE PROTECTING THE OWNER FROM COSTS DUE TO POOR WORKMANSHIP AND FAULTY MATERIALS OR EQUIPMENT FOR A PERIOD OF ONE (1) YEAR FROM DATE OF ACCEPTANCE.
B. FURNISH OWNER WITH ORIGINAL EQUIPMENT FACTORY WARRANTIES.

TEST PIPING AT PRESSURE LISTED BELOW:
A. HYDROSTATIC PRESSURE TEST:
a. SANITARY AND ROOF DRAINAGE PIPING: TESTED UNDER THE REQUIREMENTS OF THE FBCP, BUT NOT LESS THAN EQUIVALENT TO 10 FEET OF WATER.
b. WATER PIPING: 1-1/2 TIMES THE OPERATING PRESSURE, BUT NOT LESS THAN 100 PSIG AT THE TOP MOST OUTLET.

DISINFECTION OF DOMESTIC WATER PIPING SYSTEM
A. DISINFECTION SHALL BE PERFORMED AT EACH INDIVIDUAL BUILDING.
B. ALL LEAD TESTING TO BE PERFORMED IN ACCORDANCE WITH EPA AND THE LOCAL COUNTY HEALTH DEPARTMENT STANDARDS AND REGULATIONS AND MEET OR EXCEED THEIR ALLOWABLE SAFE DRINKING WATER PARAMETERS.
C. PRIOR TO STARTING WORK, VERIFY SYSTEM IS COMPLETE, FLUSHED AND CLEAN.
D. ENSURE PH OF WATER TO BE TREATED IS CORRECT.
E. INJECT DISINFECTANT, FREE CHLORINE IN LIQUID, POWDER, TABLET OR GAS FORM, THROUGHOUT SYSTEM TO OBTAIN 50 TO 80 MG/L RESIDUAL.
F. MAINTAIN DISINFECTANT IN SYSTEM FOR 24 HOURS.
G. IF FINAL DISINFECTANT RESIDUAL TESTS LESS THAN 25 MG/L, REPEAT TREATMENT.
H. FLUSH DISINFECTANT FROM SYSTEM UNTIL RESIDUAL IS EQUAL TO THAT OF INCOMING WATER OR 1.0 MG/L.
I. BLEED WATER FROM OUTLETS TO ENSURE DISTRIBUTION AND TEST FOR CONTAMINANTS AND LEAD CONTENT AT ALL THE REMOTE LOCATIONS AND AT SEVERAL INTERMEDIATE LOCATIONS. TEST LOCATIONS SHALL BE AT THE SERVICE ENTRY TO THE PROPERTY LINE, THE WATER ENTRY AT EACH BUILDING AND AT THE MOST REMOTE LOCATIONS OF THE CONSTRUCTED DOMESTIC WATER PIPING SYSTEM.
J. TAKE WATER SAMPLE NO SOONER THAN 48 HOURS AFTER FLUSHING AT EACH BUILDING AND ANALYZE IN ACCORDANCE WITH AWWA C651.
K. ALL WATER SAMPLES FOR LEAD SAMPLING SHALL BE 250 ML IN VOLUME. SAMPLING BOTTLES SHALL BE OBTAINED FROM THE CONTRACTOR'S CERTIFIED DRINKING WATER LABORATORY.
L. TESTING OF THE WATER SAMPLES SHALL BE PERFORMED BY THE CONTRACTOR'S CERTIFIED DRINKING WATER LABORATORY IN COORDINATION WITH THE COUNTIES RISK MANAGEMENT DEPARTMENT.
M. OWNER'S REPRESENTATIVE TO WITNESS ALL TEST.

* ANY CHANGES TO THESE DOCUMENTS BASED ON CONTRACTOR REQUESTED REVISIONS SHALL BE CONSIDERED ADDITIONAL SERVICES.

GENERAL NOTES

1. ALL WORK AND MATERIALS SHALL BE PROVIDED AND INSTALLED IN COMPLIANCE WITH THE FLORIDA BUILDING CODES AND AS PER MANUFACTURERS INSTRUCTION.
2. PROVIDE SHUT-OFF VALVES FOR BOTH HOT AND COLD DOMESTIC WATER PIPING FEEDING GROUPS OF FIXTURES, AND AS PER FBC-P 606.1.
3. PROVIDE ALL EXTERIOR WALL HYDRANTS/BIBBS WITH SHUT-OFF BALL VALVES IMMEDIATELY INSIDE ABOVE THE CEILING OR OTHER ACCESSIBLE LOCATION.
4. PRIME AND PAINT ALL OUTSIDE PIPE AND PIPE SUPPORTS IF THEY ARE NOT GALVANIZED.
5. INSTALL WATER HAMMER ARRESTORS WHERE DIRECTED BY CODE.
6. PROVIDE CLEANOUTS AS DIRECTED BY FBC-P.
7. PROVIDE CLEANOUTS AT THE BASE OF ALL SEWER RISERS ON EACH FLOOR.
8. EXACT LOCATIONS AND MOUNTING HEIGHTS OF PLUMBING FIXTURES SHALL BE OBTAINED FROM THE ARCHITECTURAL DRAWINGS.
9. FLOOR CLEAN OUTS SHALL BE INSTALLED FLUSH TO FINISHED FLOOR. INSTALL FLOOR CLEAN OUTS (FCO) AS CLOSE TO HIGH POINT AS POSSIBLE. NO DISHING PERMITTED.
10. ALL PLUMBING FIXTURE VENTS SHALL TERMINATE A MINIMUM OF 12" FROM ANY VERTICAL SURFACE AND 10' FROM ANY OUTSIDE AIR INTAKES.
11. ALL PLUMBING WORK SHALL BE INSTALLED TO AVOID INTERFERENCE WITH ELECTRICAL AND MECHANICAL EQUIPMENT AND STRUCTURAL FRAMING. INSTALL EQUIPMENT SUCH THAT REMOVAL DOES NOT REQUIRE REMOVAL OF CONNECTED PIPING.
12. BEFORE COMMENCEMENT OF WORK, CONTRACTOR SHALL VERIFY THE EXACT LOCATIONS, ELEVATIONS AND CHARACTERISTICS OF ALL UTILITIES AND PIPING, AND SHALL NOTIFY THE ARCHITECT/ENGINEER OF ANY DISCREPANCIES.
13. ALL WASTE AND VENT PIPING SHALL SLOPE AT 1/8" PER FOOT UNLESS INDICATED OTHERWISE.
14. INSULATE ALL EXPOSED PVC LOCATED IN RETURN AIR PLENUM SPACES WITH APPROVED FIRE WRAP INSULATION.
15. AVOID THE USE OF PLASTICS IN RETURN AIR PLENUMS.

GENERAL DEMOLITION NOTES

A. THE EXTENT OF DEMOLITION WORK SHOWN ON THE DRAWINGS ARE BASED ON EXISTING DRAWINGS AND FIELD SURVEY AND MAY NOT BE ALL INCLUSIVE. IT IS THE PLUMBING CONTRACTOR'S RESPONSIBILITY TO REMOVE ALL FIXTURES, PIPING AND OTHER EQUIPMENT AS MAY BE NECESSARY AND AT NO ADDITIONAL COST TO THE OWNER.
B. ALL MEANS OF EGRESS SHALL BE KEPT OPEN AT ALL TIMES.
C. CONTRACTOR SHALL COMPLY WITH APPLICABLE BUILDING CODES FOR ALL DEMOLITION WORK.
D. PROCEED WITH DEMOLITION FROM TOP TO BOTTOM. DO NOT REMOVE ITEMS SUPPORTING OTHER MEMBERS WITHOUT PROVIDING TEMPORARY OR PERMANENT BRACING AS REQUIRED.
E. EXISTING EQUIPMENT NOT REMOVED BUT DAMAGED DURING THE COURSE OF CONSTRUCTION SHALL BE RESTORED TO EXISTING CONDITION AT NO ADDITIONAL COST TO THE OWNER.
F. PROTECT ITEMS AND EQUIPMENT ON SITE TO MINIMIZE DAMAGE. ANY DAMAGE INCURRED TO THE SITE SHALL BE REPAIRED BY THIS CONTRACTOR AT NO ADDITIONAL COST TO THE OWNER.
G. REMOVAL OF ALL PIPING INCLUDES REMOVAL OF ALL SUPPORTS, HANGERS AND FASTENERS. PENETRATIONS LEFT BY THE REMOVAL OF PIPING SHALL BE PATCHED TO REMOVE THE APPEARANCE OF DEMOLITION. EXISTING PIPING NOT SHOWN TO BE REMOVED SHALL BE PROTECTED THROUGHOUT CONSTRUCTION. LEAKS IN PIPING RESULTING FROM DAMAGE DURING CONSTRUCTION SHALL BE PROMPTLY REPAIRED BY THIS CONTRACTOR.
H. ALL MATERIALS AND EQUIPMENT SHALL BE DISPOSED OF IN ACCORDANCE WITH APPLICABLE LAWS AND ENVIRONMENTAL REGULATIONS.
I. REFER TO ARCHITECTURAL DRAWINGS FOR FURTHER DEMOLITION REQUIREMENTS. CONTRACTOR TO PROPERLY REMOVE ALL PLUMBING SYSTEMS WHERE INDICATED AND PROPERLY TERMINATE ALL SYSTEMS.

CODE COMPLIANCE REQUIREMENTS

ALL WORK SHALL BE IN COMPLIANCE WITH THE FOLLOWING CODES, BUT NOT LIMITED TO:
8TH EDITION OF THE 2023 FLORIDA BUILDING CODE - BUILDING (FBCB)
8TH EDITION OF THE 2023 FLORIDA BUILDING CODE - EXISTING BUILDING (FBCEB)
8TH EDITION OF THE 2023 FLORIDA BUILDING CODE - ACCESSIBILITY (FBCA)
8TH EDITION OF THE 2023 FLORIDA BUILDING CODE - ENERGY CONSERVATION (FBCEC)
8TH EDITION OF THE 2023 FLORIDA BUILDING CODE - MECHANICAL (FBCM)
8TH EDITION OF THE 2023 FLORIDA BUILDING CODE - PLUMBING (FBCP)
8TH EDITION OF THE 2023 FLORIDA BUILDING CODE - FUEL GAS (FBCFG)
8TH EDITION OF THE 2023 FLORIDA FIRE PREVENTION CODE (FFPC)
NFPA 70 - 2020 NATIONAL ELECTRICAL CODE (NEC)

ddc engineering inc
4083 South U.S. Highway 1, Ste. 101
Rockledge, Florida 32955
Phone 321.633.4522 Fax 321.633.4528
www.ddc-engineers.com
dasilva.david@ddc-engineers.com
C.O.A.: 25988
DDC PROJECT NO.: 25007.01

David A. DaSilva
54739

THIS ITEM HAS BEEN DIGITALLY SIGNED AND SEALED BY DAVID A. DASILVA ON THE DATE ADJACENT TO THE SEAL. PRINTED COPIES OF THIS DOCUMENT ARE NOT CONSIDERED SIGNED AND SEALED AND THE SIGNATURE MUST BE VERIFIED ON ANY ELECTRONIC COPIES.

REVISIONS

NO.	DATE	DESCRIPTION

DOCUMENT HISTORY

HOLLY HILL SCHOOL
REPLACE BOILER
VCS Project NO. 2648219
1500 CENTER AVENUE,
HOLLY HILL, FL. 32117

ENGINEER OF RECORD
ENGINEER
DAVID A. DASILVA

DESIGNED BY	DRAWN BY
DAD	IO/HR
ISSUE DATE 03/27/2026	AE PROJECT NUMBER 25007.01

SHEET TITLE
PLUMBING LEGEND & NOTES

DRAWING NO.
P001

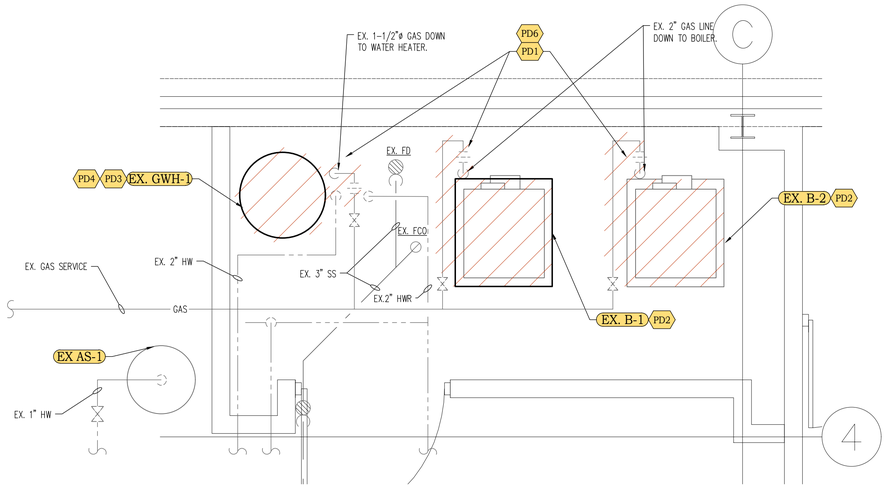

PLUMBING DEMOLITION PLAN

ENLARGED BOILER ROOM

1/2" = 1'-0"

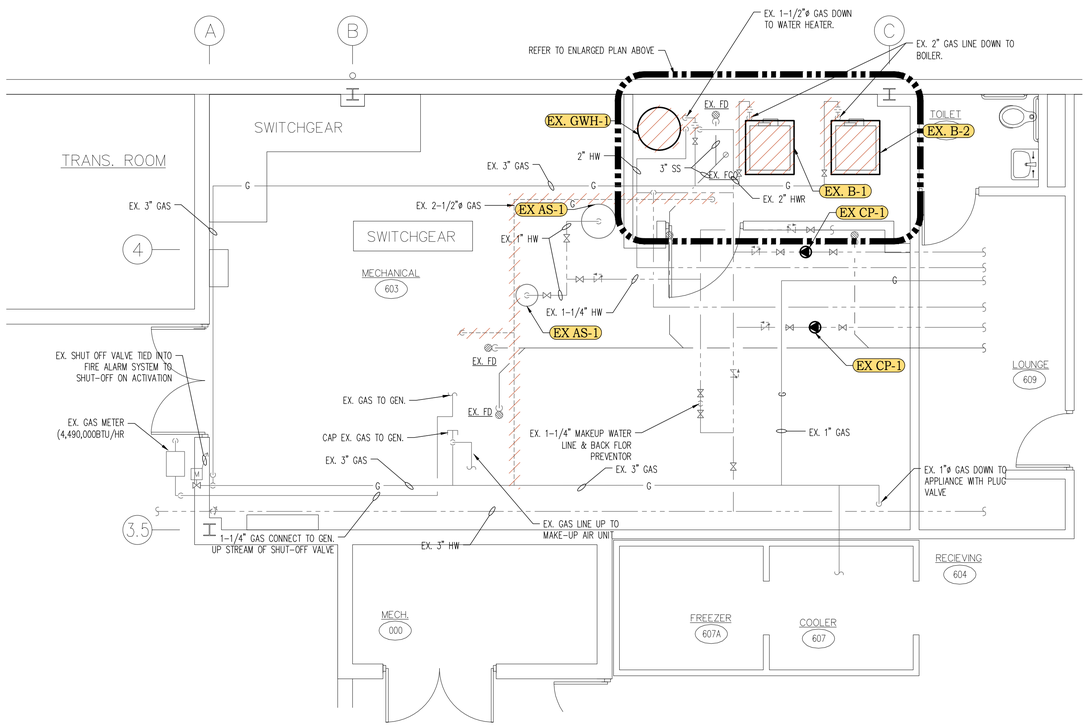

PLUMBING DEMOLITION PLAN

1/4" = 1'-0"

DEMO NOTES

PD#

1. REMOVE EXISTING EQUIPMENT, DISCONNECT ELECTRIC PIPE AND VENTS.
2. PROPERLY REMOVE ALL DRAIN AND GAS LINES SERVING BOILERS.
3. REMOVE EXISTING GAS WATER HEATER AND ASSOCIATED PIPING.
4. DISCONNECT & REMOVE ALL DOMESTIC HOT/COLD WATER PIPING SERVING WATER HEATER.
5. CONTRACTOR TO SAW CUT WALLS AND SLAB AS NECESSARY TO INSTALL NEW PLUMBING SYSTEM. PROPERLY PATCH AND REPAIR.
6. DISCONNECT AND REMOVE GAS PIPING TO EQUIPMENT BEING REMOVED.

EXISTING GAS WATER HEATER

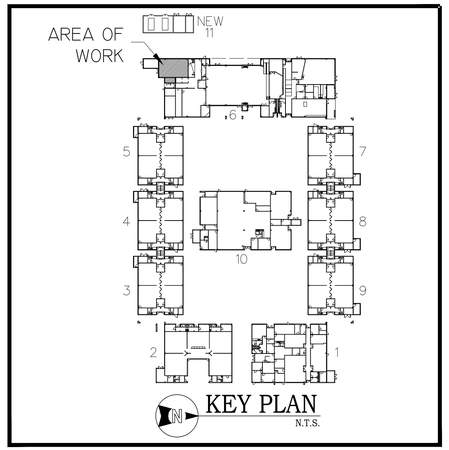

KEY PLAN

N.T.S.

ddc engineering inc

4083 South U.S. Highway 1, Ste. 101
Rockledge, Florida 32955
Phone 321.633.4522 Fax 321.633.4528
www.ddc-engineers.com
dasilva.david@ddc-engineers.com
C.O.A.: 25988
DDC PROJECT NO.: 25007.01

David A. DaSilva
54739

THIS ITEM HAS BEEN DIGITALLY SIGNED AND SEALED BY DAVID A. DASILVA ON THE DATE ADJACENT TO THE SEAL. PRINTED COPIES OF THIS DOCUMENT ARE NOT CONSIDERED SIGNED AND SEALED AND THE SIGNATURE MUST BE VERIFIED ON ANY ELECTRONIC COPIES.

REVISIONS

DOCUMENT HISTORY

NO.	DATE	DESCRIPTION

HOLLY HILL SCHOOL
REPLACE BOILER
VCS Project NO. 2648219
1500 CENTER AVENUE,
HOLLY HILL, FL. 32117

ENGINEER OF RECORD
ENGINEER
DAVID A. DASILVA

DESIGNED BY	DRAWN BY
DAD	IO/HR
ISSUE DATE 03/27/2026	AE PROJECT NUMBER 25007.01

SHEET TITLE
PLUMBING DEMOLITION PLANS

DRAWING NO.
PD100

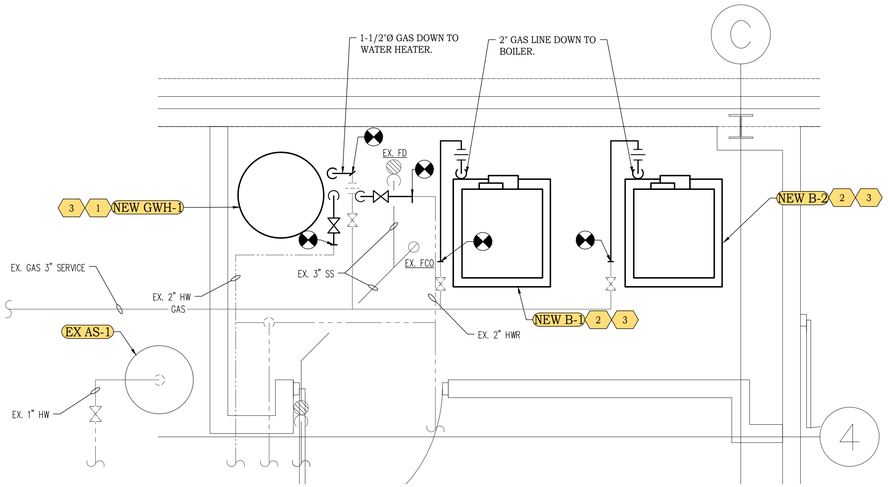

PLUMBING PLAN

ENLARGED BOILER ROOM 1/2" = 1'-0"

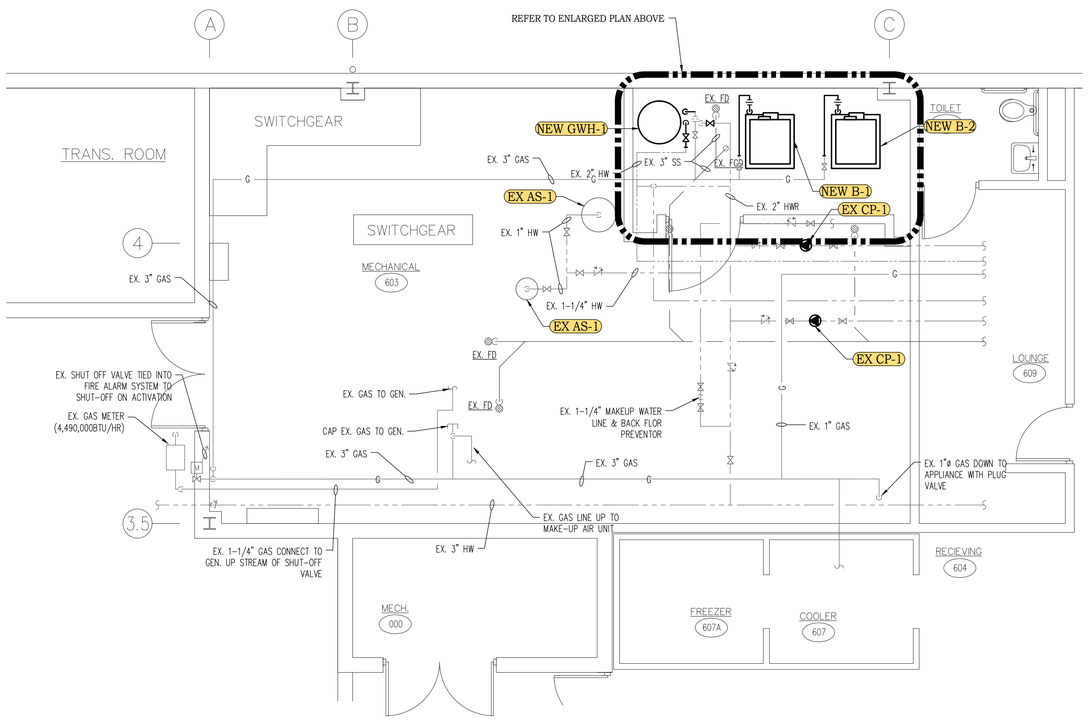

PLUMBING PLAN

1/4" = 1'-0"

NOTES

1. INSTALL NEW GAS WATER HEATER. RECONNECT TO EXISTING PIPING, VENTS AND ELECTRICAL SERVICES.
2. INSTALL NEW BOILERS. RECONNECT TO EXISTING PIPING, VENTS AND ELECTRICAL SERVICE.
3. ROUTE ALL NEW RELIEF DRAINS FROM EQUIPMENT TO FLOOR DRAINS.

GENERAL NOTES

1. PROVIDE WATER HAMMER ARRESTORS FOR ALL PLUMBING FIXTURES.
2. CONTRACTOR TO CONFIRM PIPE SIZES, LOCATIONS AND FLOW.
3. PROVIDE SHUT OFF VALVES FOR EACH NEW EQUIPMENT.
4. PROPERLY ANCHOR ALL PIPING TO STRUCTURE.
5. INSULATE ALL HOT WATER PIPES WITH 1-1/2" FIBERGLASS INSULATION.
6. CONTRACTOR TO LABEL AND IDENTIFY ALL PIPING.

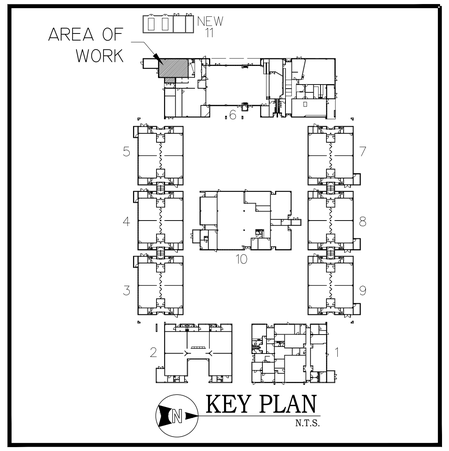

KEY PLAN

N.T.S.

ddc engineering inc
4083 South U.S. Highway 1, Ste. 101
Rockledge, Florida 32955
Phone 321.633.4522 Fax 321.633.4528
www.ddc-engineers.com
dasilva.david@ddc-engineers.com
C.O.A.: 25988
DDC PROJECT NO.: 25007.01

David A. DaSilva
54739

THIS ITEM HAS BEEN DIGITALLY SIGNED AND SEALED BY DAVID A. DASILVA ON THE DATE ADJACENT TO THE SEAL. PRINTED COPIES OF THIS DOCUMENT ARE NOT CONSIDERED SIGNED AND SEALED AND THE SIGNATURE MUST BE VERIFIED ON ANY ELECTRONIC COPIES.

REVISIONS

DOCUMENT HISTORY

NO.	DATE	DESCRIPTION

HOLLY HILL SCHOOL
REPLACE BOILER
VCS Project NO. 2648219
1500 CENTER AVENUE,
HOLLY HILL, FL. 32117

ENGINEER OF RECORD
ENGINEER
DAVID A. DASILVA

DESIGNED BY	DRAWN BY
DAD	IO/HR
ISSUE DATE 03/27/2026	AE PROJECT NUMBER 25007.01

SHEET TITLE
PLUMBING PLANS

DRAWING NO.
P100

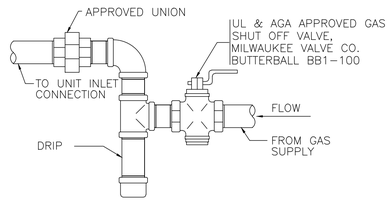

GAS CONNECTION

N.T.S.

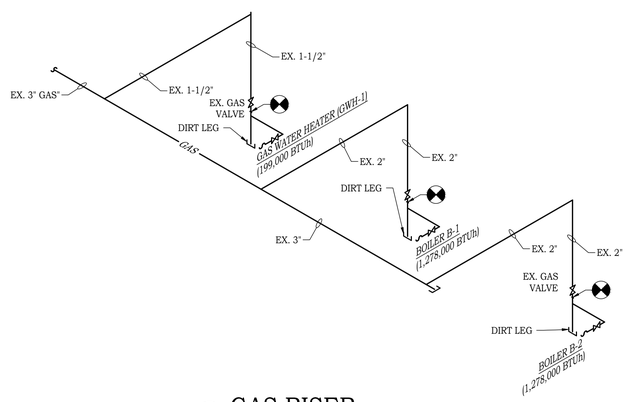

G1 / P100 GAS RISER

N.T.S.

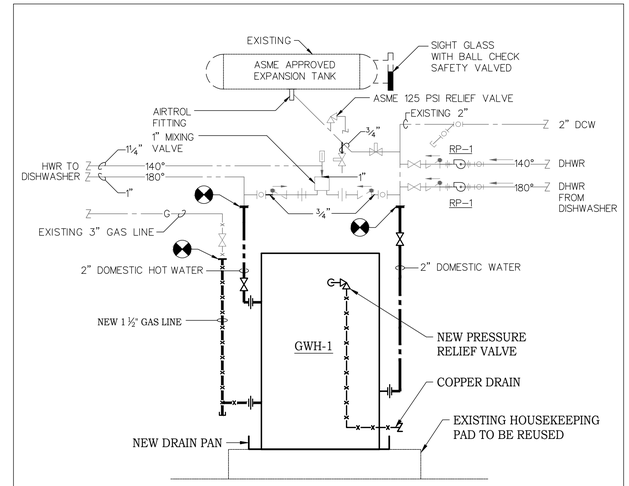

P1 WATER HEATER DETAIL

N.T.S.

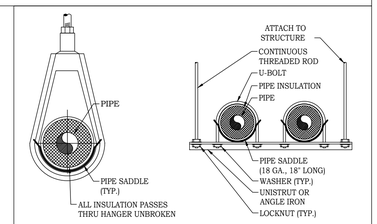

SIZES UP TO 3" SINGLE

MULTIPLE

P2 INSULATED PIPE HANGER DETAIL

N.T.S. M-D009

ddc engineering inc

4083 South U.S. Highway 1, Ste. 101
Rockledge, Florida 32955
Phone 321.633.4522 Fax 321.633.4528
www.ddc-engineers.com
dasilva.david@ddc-engineers.com
C.O.A.: 25988
DDC PROJECT NO.: 25007.01

David A. DaSilva
54739

THIS ITEM HAS BEEN DIGITALLY SIGNED AND SEALED BY DAVID A. DASILVA ON THE DATE ADJACENT TO THE SEAL. PRINTED COPIES OF THIS DOCUMENT ARE NOT CONSIDERED SIGNED AND SEALED AND THE SIGNATURE MUST BE VERIFIED ON ANY ELECTRONIC COPIES.

REVISIONS

DOCUMENT HISTORY

NO.	DATE	DESCRIPTION

HOLLY HILL SCHOOL
REPLACE BOILER
VCS Project NO. 2648219
1500 CENTER AVENUE,
HOLLY HILL, FL. 32117

ENGINEER OF RECORD
ENGINEER
DAVID A. DASILVA

DESIGNED BY	DRAWN BY
DAD	IO/HR
ISSUE DATE	AE PROJECT NUMBER
03/27/2026	25007.01

SHEET TITLE
PLUMBING DETAILS & RISERS

DRAWING NO.
P500