`

TRUSSVILLE CITY SCHOOLS

476 Main Street
Trussville, AL 35173
(205) 228-3000 FAX (205) 228-3001

Dr. Stephen Ward Board
President

Dr. Patrick Martin
Superintendent

Date: June 11, 2026

Bid # 26-07

FireX and Steamer Hewitt Trussville High School

The Trussville City Board of Education will accept bids for the following food service cafeteria equipment for the school's systems Child Nutrition Program, according to the specifications set forth in this bid request:

The bids will be held on June 25th, 2026, at 10:00am CST at Trussville City Board of Education. Bids may be mailed to the attention of Terrie Coggins, 476 Main Street, Trussville, AL 35173. Or hand delivered at the bid opening. Bids will be publicly opened and read promptly at 10:00am on June 25th, 2026. No bids will be accepted once the opening begins. Please note any requirements listed on the response form and bid specification sheet.

You may access this bid using this link to the Trussville City Schools web site https://www.tcsk12.us/departments/bids-and-vendor-information. Click the bid number listed above from the list under the Child Nutrition Bid folder to view the bid. If you would like to request a hard copy of this bid, you may call 205-228-3034.

In the event the Trussville City School system is closed due to unforeseen circumstances the bid opening date please visit https://www.tcsk12.us/ to view the **District News** section for new dates and times.

The specifications and bid information attached should be *read carefully*. On the final page, you must enter your bid amount and sign. If the document is not submitted as requested, it may be such that we cannot classify this offer as a legitimate bid. All bids must comply with the Alabama State Bid Law.

The bid will be awarded to the lowest Bidder/Vendor meeting specifications. Trussville City Schools reserves the right to reject any and or all bids and to waive informalities in awarding this bid to the lowest responsible bidder. If you have any questions concerning this bid, please contact the writer at 205-228-3034.

Sincerely,

Terrie Coggins
CNP Supervisor
205-228-3064

FireX Hewitt Trussville High School
Bid # 26-07

Bidder/Vendor are requested to retain these instructions, conditions and specifications for future reference. Once awarded this is your contract document.

I. GENERAL INFORMATION

A. Bidder/Vendor must use our form for submitting their bid.

B. All bid envelopes must be sealed and marked with the following in the lower left hand corner: Bid #, Name of the bid, opening time and date and company name. Late bids will not be opened.

C. Trussville City Schools is tax exempt under State and Federal law. Bids will not include State Sales Tax, Federal Excise Taxes or any other fee.

D. Records showing successful Bidder/Vendor and prices quoted will be placed on file and may be examined upon request. If the contract is awarded to someone other than lowest bidder, a note of explanation will appear in the bid file.

E. Use of trade names and numbers shall be interpreted as establishing a standard of quality and shall not be construed as limiting competition.

F. Any necessary amendments to this Bid will be posted on our web page at https://www.tcsk12.us/departments/bids-and-vendor-information. While Trussville City Schools will make an effort to communicate all amendments, monitoring the web page for amendments will be considered the Bidder/Vendors responsibility.

G. Any Request for Information (RFI) should be submitted to terrie.coggins@tcsk12.us and will be addressed via email to all bidders.

II. SPECIFICATIONS

A. The Bidder/Vendor shall state the manufacturer's warranty for each item quoted and will be responsible for all warranty service as required.

III. DISQUALIFICATION OF BIDS

Bids may be disqualified before the awarding of the contract for any of the following:

A. Failure to mark envelope as required.

B. Failure to include requested information or other details of the bid.

C. Excessive errors.

D. Failure to complete "Bid Form for Alabama Immigration Law Compliance" and return appropriate documentation. MUST be included even if previously submitted

E. Failure to have an original signature on the Bid Form, a faxed copy is not acceptable.

F. The failure to include the acknowledgment of addendum form (if applicable)

G. This Bid shall not be altered by the Bidder/Vendor in any way. Any and all changes from those specified shall be listed as deviation. Failure to abide by this requirement may result in the bid being disqualified from consideration.

IV. MATERIALS BID (if applicable)

A. All items quoted shall be new packed in manufactures original containers and shall meet or exceed the specific specifications shown. Re-built or remanufactured equipment will not be considered.

B. The Bidder/Vendor shall state the manufacturer's warranty for each item quoted and will be responsible for all warranty service as required.

C. Bidder/Vendor shall quote the brand and/or model specified. If bidding a substitute, Bidder/Vendor must identify the differences in writing on additional sheet(s). Bidder/Vendor must submit product specification sheets for all items being quoted. All bids not complying with the statement may be rejected. (if applicable)

V. CONTRACT PERIOD/PRICING OPTIONS

A. The bid award or any contract entered into as a result of the bid award cannot be assigned, subcontracted out or franchised out to any contractor(s). The company submitting the bid must be the company that actually performs the work, and no assignment whatsoever shall be permitted.

B. Prices should be good for the length of this contract

C. Trussville City Schools reserves the right to terminate this contract with a 30-day written notice to the vender.

D. The bid will be awarded to the lowest Bidder/Vendor meeting specifications. Trussville City Schools reserves the right to reject any and or all bids and to waive informalities in awarding this bid to the lowest responsible bidder. If you have any questions concerning this bid, please contact the writer at 205-228-3034.

VI. PROPOSAL FORM

A. Proposal form shall be filled out in full.

B. Each item quoted shall be described by brand name and model number.

C. Each item shall be assigned a unit cost. Failure to provide this information on proposal form may be cause for rejection of bid.

VII METHOD OF AWARD and DELIVERY

A. The award will be made to the lowest responsible Bidder/Vendor meeting specifications. It is not the policy of Trussville City Schools to purchase on the basis of low bid only. Quality, conformity with specifications, purpose for which required, terms of delivery, past service and experience are among the factors that may be considered in determining the responsible bidder.

B. In the event the low Bidder/Vendor refuses to accept the entire requirements without deviation, the bid may be awarded to the next lowest bidder.

C. Award will be made to the responsible Bidder/Vendor offering a proposal that is deemed the most acceptable and advantageous to the Trussville City School System.

D. F.O.B. ADD ADDRESS FOR FOB. The title and risk of loss of the goods will not pass to Trussville City Schools, departments or local school until receipt and acceptance takes place at the FOB point. Bidder/Vendor will notify Trussville City Schools 24 hours prior to delivery.

VIII. SPECIFICATIONS: Please see attached pages.

SCOPE OF WORK:
DEALER RESPONSIBILITIES:
1)Unpackages, assemble, and install equipment
2)Dispose of packaging
SCHOOL SYSTEM RESPONSIBILITIES:
1) Provide access to the kitchen for all work to be completed.
2) In the event additional electrical service is required provide the required electrical connections

Equipment must be new
Brand name is to establish quality. Must be this or equivalent.

Item 1: HEWITT TRUSSVILLE HIGH SCHOOL
TRUSSVILLE CITY SCHOOLS
(1) KETTLE, ELECTRIC, TILTING (1 REQ'D) Firex (Middleby) Model UPRIE048_V1 Dimensions: 52.48(h) x 57.28(w) x 51.57(d) or equivalent

(Equipment must be new)

Tilting Kettle, electric, indirect heating, 48 gallon capacity, insulated lid with double cover, (5) cooking modes, cooling double-jacket, temperature control by means of two probes, multifunctional keyboard with touch screen, pressure controlled by means of pressure switch 8.7 PSI, safety valve (12.3 PSI), vacuum valve and analogic pressure gauge, ON/OFF switch, emergency button, double-jacket safety valve, (4) adjustable stainless steel feet, 316 stainless steel inner liner, 304 stainless steel construction,IPX5, ETL

* Electrical: Electrical 480V/3-ph.

1 ea 1-year parts and labor warranty, standard

1 ea Note: A site survey must be completed before equipment will be released for shipment. This ensures that the correct equipment arrives on location based on readiness and location of utilities, drain, and transportation constraints such as doorway dimensions.

SCOPE OF WORK:
DEALER RESPONSIBILITIES:
1) Unpackage, assemble, and install equipment
2) Dispose of packaging
3) Coordinate with Firex to set up a factory installation of the specified electric kettle and water filter.
4) Coordinate with the Firex factory rep to do the equipment demonstration.

SCHOOL SYSTEM RESPONSIBILITIES:
1) Provide access to the kitchen for all work to be completed.

Data sheet
UPRIE048_V1

Constructive Features
- cooking vessel in stainless steel AISI 316 (thickness 25-40/10) specifically intended for the processing of particularly acid products. Jacket in stainless steel AISI 304. Vessel with electric tilting on front part
- insulated lid with double cover in stainless steel AISI 304, with ergonomic handle, balanced by means of gas springs
- self-supporting frame in stainless steel AISI 304 (thickness 30-40/10)
- heat insulation guaranteed by panels in thick glass fibre
- outer cover in stainless steel AISI 304, fine satin finish (thickness 12-15/10)
- adjustable feet in stainless steel AISI 304 to ensure levelling, with removable cover for cleaning operations
- fast accessibility to the main functional parts (electronic card, fuses, thermostats...) only removing the frontal panels
- protection level IPX5

Functional Features General
- heating by means of armoured elements in INCOLOY-800 alloy, controlled by electronic board with automatic activation of minimum 4° F before the SETPOINT and by pressure switch set at 8.7 PSI bar to prevent steam outlet from the safety valve and unnecessary power waste
- temperature control by means of two probes (product, jacket)
- breather valve eliminating air from inside the jacket to make heating faster using saturated steam
- pressure controlled by means of pressure switch 8.7 PSI, safety valve (12.3 PSI), vacuum valve and analogic pressure gauge
- electronic control by means of multifunctional keyboard with Touch Screen 7” and easy and clear messages
- USB connection to download HACCP data, update the software and load cooking programs
- ability to interrogate the machine using communication protocol MODBUS over RS485 serial interface
- connection for power economizer

Panel Board Functions
- ON/OFF switch
- resistive 7” touch screen
- keys for moving basin
- selection of 5 different cooking modes (6 with optional cooling), with working temperature setting
- cooling double-jacket (optional)
- cooking type and time setting
- cooking in “Manual” mode
- cooking in “Program” mode
- creating and editing multiphase cooking programs, setting for each phase: type of cooking; cooking parameters (temperature and time), and possibility to insert text messages
- tank water load setting (hot up to 140° F/cold) with automatic liter measurements
- control for tilting and return of cooking tank from Touch Screen or keyboard
- delayed cooking setting with date, time, and programming cycle
- language settings touch Screen
- input of different units of measurement (° C/° F ; Liters/gallons ; etc)

Display/Signal
- display type of cooking, temperature probes used and set temperature
- heating operating visual alarm
- time to end of cycle display
- display tank out of position for cooking
- reporting cooling cavity water depletion (optional)
- signaling tap position, managing water in the tank
- signal of lid and cock position during vat tilting
- thermostat intervention safety signaling
- sound-visual alarm minimum water level in jacket
- self-diagnostics

Safety System
- emergency button
- blocking of heating for excess of temperature with manual resettable safety thermostat
- heating block at minimum water level in cavity
- double-jacket safety valve
- heating interruption during vat tilting

Optionals
- PAF2050 - TRI-CLOVER SANITARY FITTINGS 2”
- PAF2060 - TRI-CLOVER SANITARY FITTINGS 3”
- USCT2 - DOUBLE-JACKET COOLING CONNECTION
- CADE0010 - CLEANING SHOWER FOR CBT/PR
- D150 - KIT WHEELS PR/CBT/DBR
- DAPF0012 - SET FEET FOR DBR/CBT/PR
- PACF0700 - LID HOLE WITH GRID AND TEFLON CAP

Accessories
- PAF0700 - STRAINER FOR PR..180

Certificates
Intertek Intertek

Planner
.....
.....
.....
.....
.....
.....
.....
.....

Firex Srl reserves the right to make modifications to the products without prior notice. All information correct at time of printing - 2023.01.24/01

Firex Srl
Zona Industriale Gresal 28 - 32036 - Sedico (BL) - Italy
Phone +39 0437 852700
Fax +39 0437 852858
www.firex.com
firex@firex.com

Data sheet
UPRIE048_V1

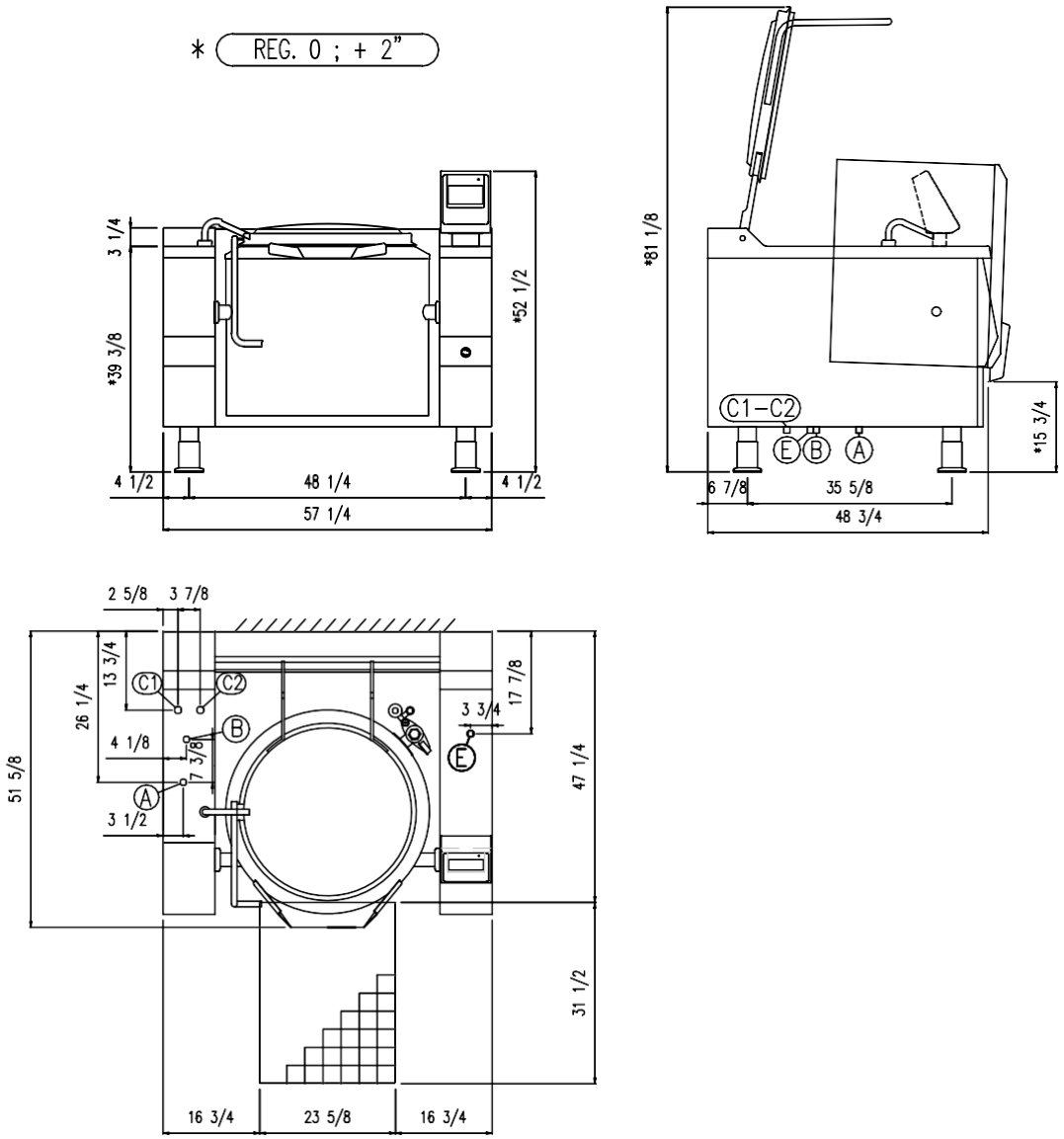

Dimensions weights and capacities

Width	57 1/4 inches	Vessel diameter	27 1/2 inches	Weight	1014 lbs
Depth	51 5/8 inches	Vessel height	22 1/4 inches		
Height	52 1/2 inches	Capacity	48 gal		

Water connection

Water pressure	25÷50 PSI	Cold water inlet (B)	3/4"	Hot water inlet (A)	3/4"

Electrical connection

STD Voltage (E)	3 PHASE 208V ~ 60Hz	Electric power	24.50 Kw	Current	68.0 A
STD Voltage (E)	3 PHASE 220-240 V ~ 60Hz	Electric power	32.50 Kw	Current	78.2 A
OPT Voltage (E)	3 PHASE 460-480 V ~ 60Hz	Electric power	32.50 Kw	Current	39.1 A

Optionals USCT2

Chilling water inlet (C1)	3/4"
Chilling water outlet (C2)	3/4"
Chilling water pressure	7÷8 PSI

Firex Srl reserves the right to make modifications to the products without prior notice. All information correct at time of printing - 2023.01.24/01

Firex Srl
Zona Industriale Gresal 28 - 32036 - Sedico (BL) - Italy
Phone +39 0437 852700
Fax +39 0437 852858
www.firex.com
firex@firex.com

Item 2: HEWITT TRUSSVILLE HIGH SCHOOL
TRUSSVILLE CITY SCHOOLS
(1)TWO COMPARTMENT PRESSURELESS CONVECTION STEAMER
CLEVELAND MODEL 24CEM36 or equivalent
(Equipment must be new)

A. One (1) Model 24CEM36 electric pressurless convection steamer with two (2) fully insulated, 14 gauge stainless steel compartments each with stainless steel slide rack with pan capacity for (3) 12' x 20" x 2-1/2" pans.
B. Electric Steam Boiler 36KW with automatic boiler fill on start-up, automatic boiler drain at shutdown, and automatic water level control with a low water power cut-off circuit. The steam boiler is equipped with High limit pressure safety switch, 15 psi safety valve, and a steam boiler pressure gauge. A "Water Jet" spray rinse cleaning cycle keeps the boiler drain clear.
C. Each compartment has a 60 minute dial timer, and a separate bypass switch for constant steaming. The instant steam standby mode keeps the boiler at steaming temperature allowing the compartments to start cooking instantly. The convection jets produce high velocity convection steam without fans. A cold water condenser for each compartment maintains a dry steam.
D. Two (2) "Cool to the Touch" doors with free floating inner doors with reversible door gaskets provide an air tight seal. The stainless steel slam latch door latch mechanism provides greater reliability. Doors are hinged on the left with controls on the right.
E. Main power On/Off switch automatically fills the boiler with water.
F. The steamer is mounted on 6" legs with adjustable feet and a 1" adjustment.
G. The boiler is housed in the modular cabinet base and has a stainless steel hinged door for access.
H. One (1) Power Take Off Kit #EPTO)
I. One (1) Kettle interconnecting Kit #(IMK)
J. Warranty:
Two (2) -year parts & labor warranty for K-12 Schools.
Five (5) year pro-rated parts warranty on boilers & steam generators.
Three (3) year Convection Steamer Door Warranties, standard.
K. One (1) Water Treatment Filtration Kit, with cartridge replacements includes (1) FLT0014 water filter system with (3) FTL0014 Cartridges & (3) FLT0018 Cartridges.
L. Steamer will include a special factory authorized installation.
M. Electrical 480V/60/3-ph, 43.4 amps, 36kw. 3-wire.
Drain 1-1/2" IPS-M Copper Pipe
Water: Two (2) ¼" NPT water connections. Water pressure to be 35 to 80 psi.

N. SCOPE OF WORK:
BIDDERS/INSTALER RESPONSIBILITIES:

1) Coordinate with Cleveland to set up a factory installation of the specified steamer and water filter.
2) Coordinate with the Cleveland factory rep to do the equipment demonstration.

SCHOOL SYSTEM RESPONSIBILITIES:
1) Provide access to the kitchen during normal business hours for all work to be completed.

Cleveland

TWO COMPARTMENT, PRESSURELESS, ELECTRIC STEAM BOILER, 24, 36 OR 48 KW, 24" WIDE CABINET BASE DESIGN

Project _____
Item _____
Quantity _____
FCSI Section 11400 _____
Approved _____
Date _____

Classic Series Convection Steamers, 15 PSI Boiler Base Style

Models

- 24-CEM-24
- 24-CEM-48
- 24-CEM-36

Short Form Specifications

Shall be Two Compartments, CLEVELAND Convection Steamer, Model 24-CEM- _____ , Electric Steam Boiler, _____ KW, _____ volts, _____ phase, 3 wire. Solid State Controls operate timing, water level and safety functions. Electric Steam Boiler with Automatic Water Fill on start-up and Automatic Blowdown with additional Manual Drain Valve, For each cooking compartment: 60 minute Mechanical Timer, Manual Operation Mode and Cold Water Condenser. Type 304 Stainless Steel cooking compartment.

Standard Features

- Cooking Capacity for up to six 12˝ x 20˝ x 21/2˝ deep Cafeteria Pans.
- Pressureless cooking with forced convection steam, permitting doors to be opened while cooking continues.
- Solid State Controls operate water level and safety functions.
- Each compartment is equipped with a 60 minute mechanical timer, separate bypass switch for constant steaming and a cold water condenser for superior cooking results.
- Instant Steam Standby Mode: Holds boiler at steaming temperature. Allows unit to start cooking instantly.
- Durable 14 Gauge Stainless Steel Construction:
  For Steam Cooking Cavity.
- Separate Main Power Switch for "On/Off"
- Exclusive Steam Cooking Distribution System: The exclusive Convection Jets produce a high velocity convection steam without fans. Coved Corner design in cooking compartment distributes heat evenly and is easy to keep clean. Creased top & bottom enhance drainage. Cold Water Condenser for each compartment maintains a dry steam. Fully insulated cooking compartment for thermal efficiency. Removable Stainless Steel Slide Racks for easy cleaning.
- Exclusive "Cool to the Touch" Compartment Door Design: Free floating inner door with reversible door gasket provides an air tight seal. Stainless Steel Slam/Latch Door Latch mechanism provides greater reliability.
- Left Hand Door Hinging: Compartment Doors hinged left, controls on the right.
- Modular Cabinet Base with Hinged Door.
- Electric Steam Boiler: Automatic Water Fill on start up.
- Automatic Boiler Drain at shutdown: Contains a "Water Jet" Spray Rinse Cleaning Cycle to keep drain clear.
- Automatic Water Level Control System with Low Water Power Cut-off Circuit.
- Steam boiler equipped with High Limit Pressure Safety Switch, 15 psi Safety Valve, and Steam Boiler Pressure Gauge.
- Secondary Low Water Cut-Off, factory installed (CALE)
  (Required for AZ. AR. CA. CO. CT. DE. FL. GA. HI. IL. IA. KS. MD. MA. MI. MN. MT. NE. NV. NM. NC. OK. OR. PR. RI. TN. UT. VA. WA. WV., Buffalo, NY, Wash. DC)
- NSF Certified 6˝ Stainless Steel Legs with adjustable flanged feet for a one inch level adjustment.
- Standard voltage 208 or 240 volts, 60 Hz, 3 phase.
- All Controls are serviceable from the front.

Options & Accessories

- Cafeteria pans in depths of 1˝, 21/2˝, 4˝ and 6˝
- Voltages other than standard
- Power Take Off Kit (EPTO), Kettle Interconnecting Kit (IMK)
- Correctional Packages
- Boiler Descaling Pump Kit (107142)
- Water Filters

KE004046-20

760 Beta Drive, Unit D
Mayfield Village, Ohio 44143

Tel 1.216.481.4900
Fax 1.216.481.3782
Email steam@clevelandrange.com

Timeless Quality, Trusted For Life ®

Cleveland

Classic Series Convection Steamers, 15 PSI Boiler Base Style

COMPARTMENT HAS CAPACITY FOR:
- Three, 12″ x 20″ x 21/2″ deep Cafeteria Pans

WATER QUALITY REQUIREMENTS (Boilers, Generators)

TTDS:	50-250 ppm
Hardness:	50 - 200 mm (3 - 12 gpg)
pH value:	7.0 - 8.5
CL (Chloride):	max 50 ppm
Cl2 (free chlorine):	max 0.1 ppm
SiO2 (silica):	max 13 ppm
NH2Cl: (mono-chloramine)	max 0.1 ppm
Total Alkalinity:	50 - 100 ppm

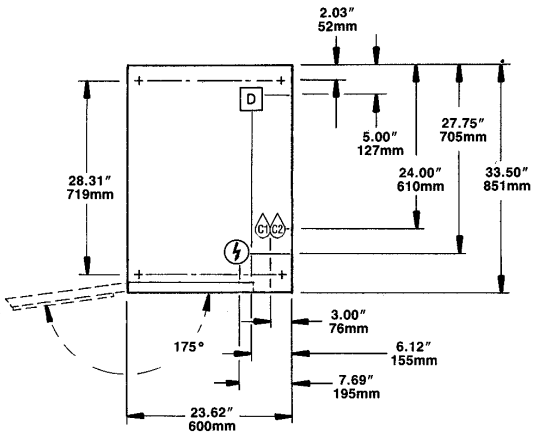

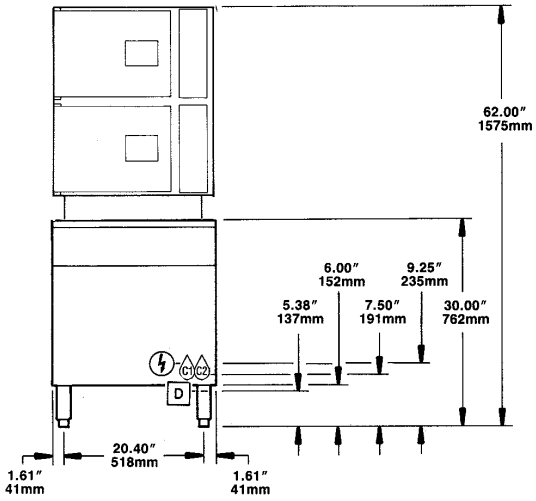

SHIPPING WEIGHTS & DIMENSIONS

Model	Weight	Width	Depth	Height
24-CEM-24	541 lbs	30”	43”	68”

ELECTRIC

KW	Volts	Watts	Ph	Amps	Wire
24	208	21,500	3	59.7	3
	220	24,000	3	63.1	3
	240	24,000	3	57.8	3
	440	20,200	3	26.5	3
	480	24,000	3	28.9	3
36	208	32,200	3	89.5	3
	220	36,000	3	94.6	3
	240	36,000	3	86.7	3
	440	30,200	3	39.7	3
	480	36,000	3	43.4	3
48	208	42,900	3	119.2	3
	220	48,000	3	126.1	3
	240	48,000	3	115.6	3
	440	40,300	3	52.9	3
	480	48,000	3	57.8	3

NOTE: When ordering optional reverse door openings: Control Panel, door openings and cooking compartments are opposite that shown.

WATER (C)	DRAINAGE (D)	CLEARANCE
1/4″ NPT Cold Water Inlet 35 psi minimum 60 psi maximum (C1) Condenser Feed (C2) Boiler Feed	**The Floor Drain must be located outside the confines of the equipment base.** 1 1/2″ I.P.S. common drain. Do not connect other units to this drain. Do not use PVC pipe for drain.	Right - 3”, Left - 3”, Rear - 3” (12” on control side if adjoining wall or equipment is over 30” high for service acess) **Contact factory for variances to clearances.**

NOTES:
Cleveland Range reserves right of design improvement or modification, as warranted.
Many regional, state and local codes exist and it is the responsibility of the owner and installer to comply with the codes.
Cleveland Range equipment is built to comply with applicable standards for manufacturers. Included among those approval agencies are ASME/N. Bd, UL and NSF.

(NOT TO SCALE)

It is not the policy of Trussville City Schools Board of Education to purchase on the basis of low bid only. Quality, conformity with specifications, purpose for which required, terms of delivery are factors which may be used to determine the low responsible bidder. Bidders must abide by the provisions of the Americans with Disabilities Act of 1990 in order to provide goods or services to the Trussville City Board of Education.

Section 9 of the Alabama Immigration Act No. 2011-535 (http://www.ago.state.al.us/File-Immigration-AL-Law- 2011-535) requires contractors provide the Alabama Department of Education with an **Affidavit of Immigration Compliance and the contractor's E-Verify Memorandum of Understanding** as a condition of the award of any contract. **These two documents must be included with the bid.** If you do not believe these requirements are applicable to your entity, include an explanation justifying such exemption. A contractor can obtain the E- Verify Memorandum of Understanding upon completion in the E-Verify enrollment process located at the federal website www.dhs.gov/e-verify.

The successful bidder must provide a copy of their current Trussville City business license, if applicable, before the bid can officially be awarded by the Trussville City Board of Education. Each item in the bid shall be awarded to the vendor on the basis of lowest total price with all standards of quality for each item as described being met. Bidder is to quote prices on all items listed. A bid that does not contain a price for each item may not be considered.

Payment will be made by the school system upon receipt of invoice, inspection, and acceptance by a designated employee of the Trussville City School system.

The Trussville City Board of Education reserves the right to reject any and all bids and to award the bid in a manner deemed to be in the best interests of the Trussville City School system. In the event that any provisions of the bid award or written contracts emanating from the award is in conflict with Alabama's bid law, the bid award and resultant contract are declared null and void.

The vendor's representative must complete and sign the attached Itemized List Bid Proposal form, Vendor Certification page, and the form titled "Certification Regarding Debarment, Suspension, Ineligibility and Voluntary Exclusion – Lower Tier Transactions."

Envelopes containing bids should be sealed and clearly marked on the outside **"CNP Bid 26-07-"** due **June 25th, 2026 at 10:00am CST.** Bids should be mailed to Terrie Coggins, Child Nutrition Supervisor, Trussville City Board of Education, 476 Main Street, Trussville AL, 35173

GENERAL INSTRUCTIONS TO BIDDERS

Listed below are instructions to bid on this project for the Child Nutrition Program of Trussville City Schools:

1. All bid quotations shall include delivery under conditions specified. Bidder shall not be responsible for removal of existing equipment, disposal of said equipment, installation of all new equipment, or final connections.

2. Sealed bids may be mailed to: Terrie Coggins – CNP Supervisor, Trussville City Schools, 476 Main Street, Trussville, AL 35173.

3. No oral, telegraphic, or telephone proposals or modifications will be accepted. The bidder, before submitting a proposal, shall carefully examine the specifications to be fully informed as to all conditions and limitations.

4. Unit cost prices are not to exceed two decimal places. The decision of the Trussville City Board of Education will be final on any question of pricing.

5. USDA regulations prohibit schools from paying service charges and/or interest. Vendors are thus prohibited from making such charges.

6. The bid will be awarded to the lowest and most responsible bidder meeting all requirements of the identifications listed herein.

7. It is the intent of Trussville City Schools to award the bid as a total package bid award; however, the Board reserves the right to award the bid in any manner which will best serve the needs of Trussville City Schools.

8. By submitting bids, all vendors agree to and accept the provisions of the specifications and considerations.

9. Any requests for substitutions to the items listed in this Invitation to Bid must be received and approved by the CNP Supervisor by **10:00 AM June 24th, 2026**

10. Reasons for requesting the substitution must be specified in comparison to the specifications of this bid document. A copy of any approved substitutions will be sent to all vendors in an amendment.

11. All bids submitted must be valid for a minimum of 60 days after the bid opening date. Equipment to be delivered within 30 days from the date of the issuance of the purchase order.

12. The Initial Contract Term shall continue in effect from the effective date for a One-year period and shall expire on the last day of the Contract Term unless the Trussville City Board of Education and the successful bidder mutually agree to exercise the contract extension option. Upon mutual agreement, both Parties may elect to extend the initial contract term for a period of up to 4 years, in one-year increments. Such extension(s) shall be contingent on successful Bidder's consent to honor its original bid prices pursuant to all terms, conditions, and stipulations specified herein. Contract Extension(s) shall be subject to Trussville City Board of Education approval prior to the Contract Term's Expiration Date.

13. The Trussville City Board of Education reserves the right to terminate the contract award for non- performance or a material breach of stipulated terms and conditions set forth in this Invitation to Bid. In the event a contract is terminated for non-performance, the Trussville City Board of Education reserves the right to award this bid to the next Lowest Responsible Bidder pursuant in accordance with Alabama Code Section 16-13B-1 et. seq (Alabama Competitive Bid Law). Procedures for termination of contracts. 1. Verification. Upon receipt of a written report of acts or causes which may constitute ground(s) for termination as aforementioned, or upon its own initiative, the Implementing Unit shall, within a period of seven (7) calendar days, verify the existence of such ground(s) and cause the execution of a Verified Report, with all relevant evidence attached. GPPB Resolution No. 018-2004 dated December 22, 2004, Annex "A" Page 4 of 6 Annex "A" 2. Notice to Terminate. Upon recommendation by the Implementing Unit, the Head of the Procuring Entity shall terminate contracts only by a written notice to the Supplier/Contractor conveying the termination of the contract. The notice shall state: a) that the contract is being terminated for any of the ground(s) afore-mentioned, and a statement of the acts that constitute the ground(s) constituting the same; b) the extent of termination, whether in whole or in part; c) an instruction to the Supplier/Contractor or Consultant to show cause as to why the contract should not be terminated; and d) special instructions of the Procuring Entity, if any. The Notice to Terminate shall be accompanied by a copy of the Verified Report. 3. Show Cause. Within a period of seven (7) calendar days from receipt of the Notice of Termination, the Supplier/Contractor/Consultant shall submit to the Head of the Procuring Entity a verified position paper stating why the contract should not be terminated. If the Supplier/Contractor/Consultant fails to show cause after the lapse of the seven (7) day period, either by inaction or by default, the Head of the Procuring Entity shall issue an order terminating the contract.

14. The successful bidder must provide a copy of their current Trussville City business license (if applicable) before the bid can officially be awarded by the Trussville City Board of Education.

15. The successful bidder to deliver to the aforementioned locations.

16. All prices submitted in this proposal are to be delivered prices and shall not include any state or local taxes. Trussville City Schools is not liable for Federal Excise or State Sales Tax.

17. Firm prices shall be bid and include all packing, handling, shipping charges, and delivery to the destinations provided.

18. A schedule of delivery and training will be developed with the successful bidder that will meet the requirements of the Trussville City School Child Nutrition Program.

19. The successful bidder will be responsible for any damage to the buildings and grounds that are a direct result of carelessness/negligence of the delivery person. A copy of certificate of liability insurance should be provided with this bid documents.

20. Contractor must agree to comply with all applicable standards, orders, or regulations issued pursuant to the following:
    - Clean Air Act (42 U.S.C. 7401-7671q)
    - Federal Water Pollution Control Act as amended (22 U.S.C. 1251-1387)
    - Buy American provision (7 CFR §210.21)
    - Equal Employment Opportunity (41 CFR §60)
    - Davis-Bacon Act (40 U.S.C. 3141-3148)
    - Contract Work Hours and Safety Standards Act (40 U.S.C. 3701-3708)
    - Rights to Inventions Made Under a Contract or Agreement (37 CFR §401.2)
    - Debarment and Suspension (Executive Orders 12549 and 12689)
    - Byrd Anti-Lobbying Amendment (31 U.S.C. 1352)
    - Procurement of Recovered Materials (See §200.322)
    - Copeland "Anti-Kickback" Act (18 U.S.C. 874 and 40 U.S.C. 276c)

21. All bidders must make proposal in accordance with the requirements and specifications and on the enclosed proposal form, or the bid will not be considered.

22. Trussville City Schools may not award on the basis of low bid only. Quality, conformity with specifications, purpose for which required, terms of delivery, terms of payment, transportation, dates of delivery, past service, and experience are among the factors that may be considered in determining the responsive/responsible bidder.

23. Bids delivered in Federal Express, UPS, or any other such deliverer's envelope shall be sealed in a separate envelope inside the deliverer's packaging. The bid name, number, and bid opening date shall be written on the outside of the deliverer's envelope. Failure to do this may cause the bid to be inadvertently opened and thus rejected.

24. The bidder offers and agrees to furnish all items upon which prices are quoted, at the price set for each item, in the quantity as stated on the bid, delivered to the various destinations, in amounts ordered.

25. Trussville City Schools reserves the privilege to re-bid or re-negotiate any item(s) if price(s) are beyond the amount anticipated or negotiations are unsatisfactory.

26. All inquiries regarding this Invitation to Bid shall be directed to the CNP supervisor through e-mail or phone to: Terrie Coggins, CNP Supervisor, Trussville City Schools, 476 Main Street, Trussville, Alabama 35173, (205) 228-3034 (office) or Terrie.Coggins@tcsk12.com
27. NON-DISCRIMINATION STATEMENT: In accordance with Federal civil rights law and U.S. Department of Agriculture (USDA) civil rights regulations and policies, the USDA, its Agencies, offices, and employees, and institutions participating in or administering USDA programs are prohibited from discriminating based on race, color, national origin, sex, disability, age, or reprisal or retaliation for prior civil rights activity in any program or activity conducted or funded by USDA.

Persons with disabilities who require alternative means of communications for program information (e.g. Braille, large print, audiotape, American Sign Language, etc.) should contact the Agency (State or local) where they applied for benefits. Individuals who are deaf, hard of hearing or have speech disabilities may contact USDA through the Federal Relay Service at (800) 877-8339. Additionally, program information may be made available in languages other than English.

To file a program complaint of discrimination, complete the USDA Program Discrimination Complaint Form, (AD-3027) found online at: http://www.ascr.usda.gov/complaing_filing_cust.html, and at any USDA office, or write a letter addressed to USDA and provide in the letter all of the information requested in the form. To request a copy of the complaint form, call (866) 632-9992. Submit your completed form or letter to USDA by:

(1) Mail: U.S. Department of Agriculture
Office of the Assistant Secretary for Civil Rights
1400 Independence Avenue, SW
Washington, D.C. 20250-9410;
(2) Fax: (202) 690-7442; or
(3) Email: program.intake@usda.gov.
This institution is an equal opportunity provider.

U.S. DEPARTMENT OF AGRICULTURE

Certification Regarding Debarment, Suspension, Ineligibility, and Voluntary Exclusion – Lower Tier Covered Transactions

This certification is required by the regulations implementing Executive Order 12549, Debarment and Suspension, 7CFR Part 3017, Section 3017.510, Participant's responsibilities. The regulations were published as Part IV of the January 30, 1989, Federal Register (pages 4722-4733). Copies of the regulations may be obtained by contacting the Department of Agriculture agency with which this transaction originated.

(BEFORE COMPLETING CERTIFICATION, READ INSTRUCTIONS)

(1) The prospective primary participant certifies to the best of its knowledge and belief, that it and its principals:

(a) are not presently debarred, suspended, proposed for debarment, declared ineligible, or voluntarily excluded from covered transactions by any Federal department or agency;

(b) have not within a three-year period preceding this proposal been convicted of or had a civil judgment rendered against them for commission of fraud or a criminal offense in connection with obtaining, attempting to obtain, or performing a public (Federal, State or local transaction or contract under a public transaction; violation of Federal or State antitrust statutes or commission of embezzlement, theft, forgery, bribery, falsification of destruction of records, making false statements, or receiving stolen property;

(c) are not presently indicted for or otherwise criminally or civilly charged by a governmental entity (Federal, State or local) with commission of any of the offenses enumerated in paragraph (1)(b) of this certification; and

(d) have not within a three-year period preceding this application/proposal had one or more public transactions (Federal, State or local) terminated for cause or default.

(2) Where the prospective primary participant is unable to certify to any of the statements in this certification, such prospective participant shall attach an explanation to this proposal.

Organization Name PR/Award Number or Project Name

Name(s) and Title(s) of Authorized Representative(s) (please print)

Signature Date

Regarding Debarment, Suspension, Ineligibility and Voluntary Exclusion, continued Instructions for Certification

1. By signing and submitting this form, the prospective primary tier participant is providing the certification set out on the form in accordance with these instructions.

2. The inability of a person to provide the certification required below will not necessarily result in denial of participation in this covered transaction. The prospective participant shall submit an explanation of why it cannot provide the certification set out on this form. The certification or explanation will be considered in connection with the department or agency's determination whether to enter into this transaction. However, failure of the prospective primary participant to furnish a certification or an explanation shall disqualify such person from participation in this transaction.

3. The certification in this clause is a material representation of fact upon which reliance was placed when the department determined to enter into a transaction. If it is later determined that the prospective primary participant knowingly rendered an erroneous certification, in addition to other remedies available to the Federal Government, the department or agency may terminate this transaction for cause.

4. The prospective primary participant shall provide immediate written notice to the department or agency to whom this proposal is submitted if at any time the prospective primary participant learns that its certification was erroneous when submitted or has become erroneous by reason of changed circumstances.

5. The terms "covered transaction," "suspended," "ineligible," "lower tier covered transaction," "participant," "person," "primary covered transaction," "principal," "proposal," and "voluntarily excluded," as used in this clause, have the meanings set out in the Definitions and Coverage sections of the rules implementing Executive Order 12549. You may contact the department or agency to whom this proposal is being submitted for assistance in obtaining a copy of those regulations.

6. The prospective primary participant agrees by submitting this form that, should the proposed covered transaction be entered into, it shall not knowingly enter into any lower tier covered transaction with a person who is debarred, suspended, declared ineligible or voluntarily excluded from participation in this covered transaction, unless authorized by the department or agency entering into this transaction.

7. The prospective primary participant further agrees by submitting this form that it will include the clause titled "Certification Regarding Debarment, Suspension, Ineligibility and Voluntary Exclusion – Lower Tier Covered Transactions," provided by the department or agency entering into this covered transaction, without modification, in all lower tier covered transactions and in all solicitations for lower tier covered transactions.

8. A participant in a covered transaction may rely upon a certification of a prospective participant in a lower tier covered transaction that is not debarred, suspended, ineligible or voluntarily excluded from the covered transaction, unless it knows that the certification is erroneous. A participant may decide the method and frequency by which it determined the eligibility of its principals. Each participant may, but is not required to, check the Non-Procurement List.

9. Nothing contained in the foregoing shall be construed to require establishment of a system of records in order to render in good faith the certification required by this clause. The knowledge and information of a participant is not required to exceed that which is normally possessed by a prudent person, in the ordinary course of business dealings.

10. Except for transactions authorized under paragraph 6 of these instructions, if a participant in a covered transaction knowingly enters into a lower tier covered transaction with a person who is suspended, debarred, ineligible, or voluntarily excluded from participation in this transaction, in addition to other remedies available to the Federal Government, the department or agency may terminate this transaction for cause or default.

Bid Form
Alabama Immigration Law Compliance

Sec 31-13-9(a & b) of the **Code of Alabama 1975**, requires that as a condition for the award of any contract, grant, or incentive by the state, any political subdivision thereof, or any state-funded entity to a business entity or employer that employs one or more employees within the state of Alabama, the business entity or employer shall:

1. Not knowingly employ, hire for employment, or continue to employ an unauthorized alien within the State of Alabama.
2. Provide documentation establishing that the business entity or employer is enrolled in the E-Verify program
3. Participate in the E-Verify program during the performance of the contract, and shall verify every employee that is required to be verified according to the applicable federal rules and regulations.

As a condition of this bid, to be considered a responsible bidder, you **MUST** complete the following information and provide all required documentation. **FAILURE** to do so **WILL** disqualify your bid.

Company Name ("The Company"): _____
Company assigned E-Verify Number (if applicable): _____
Address: _____
City: _____ St: _____ Zip: _____
Company Representative: _____
Please Print or Type

Company Representative Title: _____
Please Print or Type

Choose one:

A: ____ "The Company" does or will employ one or more employees within the State of Alabama.

Or

B: ____" The Company" does NOT or will NOT employ one or more employees within the State of Alabama

Representative Signature: _____

********Required Documentation:**

If "A" was marked above then submit a copy of the company's E-Verify Memorandum of Understanding (MOU) including the Employer and Department of Homeland Security signature page and a completed W-9 must be included even if previously submitted.

If "B" was marked above then submit a completed W-9. The E-Verify and Memorandum of Understanding (MOU) is not applicable.

Bid Document Check List

All Bid packages must contain the following information to be consider valid. Bids packages will be disqualified for not containing the required documentation.

Note: Bidder/Vendors who continuously turn in bids with excessive errors and/or omission of required documents will be removed from the TCS Bid List

All bid envelopes must be sealed and marked with the following in the *lower left hand corner* **Bid # Name of the bid, opening time and date, and company name**. Late bids will not be opened.

Any necessary amendments to this Bid will be posted on our web page at https://www.tcsk12.us/departments/bids-and-vendor-information. While Trussville City Schools will make an effort to communicate all amendments, monitoring the web page for amendments will be considered the Bidder/Vendors responsibility.

ADDENDA: The Bidder/Vendor acknowledges receipt of Addenda Nos. ____ through ____ inclusively. *(If there are any addenda(s) they must be acknowledged in writing here).*

W-9 - Request for Taxpayer Identification Number and Certification

Failure to complete "Bid Form for Alabama Immigration Law Compliance".

- **If "A" was marked above then submit a copy of the company's E-Verify Memorandum of Understanding (MOU) including the Employer and Department of Homeland Security signature page and a completed W-9 must be included even if previously submitted.**

- **If "B" is marked on the Alabama Immigration Law Compliance bid form submit a completed W9. The E-Verify Memorandum of Understanding (MOU) is not applicable.**

Failure to have an original signature on the bid form, a faxed copy is not acceptable.

Failure to sign the *Bid Forms*.

Failure to include requested information or other details of the bid.

Each Bidder/Vendor shall submit a list of educational facilities with the name of the facility and the contact
person where they have performed the duties described in this bid.

Your bid must include a Certificate of Insurance (COI) in the minimum amount of 1 million dollars and a Workman's compensation certificate.

_____ _____

Signature Date

`

BID FORM 26-07

(1) New Electric Kettle, tilting
(1) New Double Steamer

THE UNDERSIGNED OFFERS THESE PRICES, TERMS, AND DELIVERY AS PER BID SPECIFICATIONS. A BID MUST BE SUBMITTED FOR ALL LOCATIONS LISTED. BY SIGNING THIS FORM, HE/SHE SWEARS/AFFIRMS THAT HE/SHE HAS NOT BEEN A PARTY TO AGREEMENTS OR COLLUSION THAT WOULD RESTRAIN COMPETITION.

Hewitt-Trussville High School

One 48 Gallon Kettle, Electric, Tilting:

Brand _____ **Model #** _____ **Total Price $**_____

One Double Steamer:

Brand _____ **Model #** _____ **Total Price $**_____

- **Lowest responsible bidder price for each premium equipment/software/services will be used to award the bid. The individual prices are the amount that will be considered for award purposes and therefore may be awarded to multiple vendors*
- *Note: Any exceptions from specifications must be fully explained.*

Company: _____

Address: _____

Telephone Number: _____

Fax Number: _____

Email Address: _____

Name (Print or type): _____

Signature: _____

Are you a Minority Owned Company? _____

By signing this contract, the contracting parties affirm, for the duration of the agreement, that they will not violate federal immigration law or knowingly employ, hire for employment, or continue to employ an unauthorized alien within the state of Alabama. Compliance may be verified by state and local law enforcement agencies or representatives of the Trussville City Board of Education at any time. Furthermore, a contracting party found to be in violation of this provision shall be deemed in breach of the agreement and shall be responsible for all damages resulting therefrom.