PROJECT MANUAL

FOR

2020 Sinking Fund:
Rochester Community Schools
Adams High School Food Room Countertops

(February 10, 2026)

TABLE OF CONTENTS

A. Advertisement for Bids
B. Instructions to Bidders
C. General Notes to Bidders
D. Project Specific Notes to Bidders
E. Project Bid Scopes
F. Sink Submittal
G. Bid Proposal Forms – Includes Bid Form, Familial Disclosure Statement, and Iran Economic Sanctions Compliance Form
H. Project Milestone Schedule
I. Subcontract Agreement
J. Insurance (sample certificate)
K. Hospitality Program

The following documents are part of this bid package; however, they are only available for viewing and printing on the portal. The link to the portal is noted on the Advertisement for Bids (Page 3 of the front-end documents)

L. Rochester Community Schools Safety Standards
M. Contractual Project Safety Rules
N. Food Room Drawing

FRANK REWOLD & SONS INC.
248.651.7242 | frankrewold.com
303 E. Third Street | Suite 300 | Rochester, MI 48307

ADVERTISEMENT FOR BIDS
Rochester Community Schools – 2020 Sinking Fund

Project: Rochester Community Schools
Description: Adams HS Food Room Countertops

Architect: N/A

Construction Manager: Frank Rewold and Sons Inc.
303 E. Third St., Suite 300, Rochester, MI 48307

Estimators: Nick Vestevich
(248) 229-8232
nvestevich@frankrewold.com
Questions addressed ONLY to Nick Vestevich

Bid Documents: Bid documents including bid forms may be obtained from Frank Rewold and Sons Portal at:
https://www.dropbox.com/scl/fo/8qd9k8zufx3oqlajl4rog/APRrbOxBivK1ooEYvrZ93b?rlkey=j3jujrb2i37n48z4uhj63yxmf&st=lq7fc3hu&dl=0

Bid documents will be available on or after February 10, 2026

Non-Mandatory Prebid Walk-Through: 9:00 a.m., Tuesday, February 17, 2026 - Meet at 3200 West Tienken Road, Rochester Hills, Michigan 48306. Meet at the front entrance.

Bid Due Date: **2:00 p.m., Tuesday, February 24 , 2026**
Bids will only be accepted on forms provided. Proposal forms must be in a sealed envelope, mailed or delivered in person prior by 2:00 p.m. EST on the due date to:

Attn: Jennifer Fickel, Rochester Community Schools
C/O Frank Rewold and Sons Inc.
303 E. Third St., Suite 300, Rochester, MI 48307

2:00 p.m. Public Bid Opening:
Tuesday, February 24, 2026
Frank Rewold and Sons Inc.
303 E. Third St., Suite 300, Rochester, MI 48307
4th Floor Mezzanine

Labor and Material and Performance Bond: In accordance with Michigan Compiled Laws Section 129.201, successful contractor(s) must obtain Performance and Payment Bonds for any Bid Category exceeding $50,000. The Performance and Payment Bonds shall be in an amount equal to the contract amount. The Performance and Payment Bonds shall be for the protection of Rochester Community Schools and Frank Rewold and Son Inc. and shall be executed by a surety company authorized to do business in the state of Michigan and be listed in Federal Register or have an AM Best Rating of B+ or better. All bonds to be dual obligee bonds to Rochester Community Schools and Frank Rewold and Son Inc.

Prevailing Wage Rates: Not required

Bid Bond: 5% bid security required. Bid bonds are required, however, certified or cashier checks are acceptable for bids under $50,000.

Nonexempt: This project is not tax exempt for state sales tax and/or use tax. All materials and supplies incorporated and used in construction and becoming a permanent part of this project will not be exempt from state sales tax and/or tax

Disclosure Statements: Each bid proposal must be accompanied by a sworn and notarized statement disclosing any familial relationship that exists between owner or any employee of bidder and any member of board of education or superintendent of Rochester Community Schools. Each bid proposal must also include a signed Iran Economic Sanctions Affidavit. The board of education will not accept a bid proposal that does not include this sworn and notarized disclosure statement or the Iran Economic Sanctions.

BID CATEGORIES

A Millwork

B Plumbing

INSTRUCTIONS TO BIDDERS
Rochester Community Schools – 2020 Sinking Fund
AHS Food Room Countertops

Bid Documents Availability
FRS will make the bid documents available for reviewing on or after February 10, 2026, at these locations:

FRS Office:	303 E. Third Street, Suite 300 Rochester, MI 48307
FRS Portal:	https://www.dropbox.com/scl/fo/8qd9k8zufx3oqlajl4rog/APRrbOxBivK1ooEYvrZ93bY?rlkey=j3jujrb2i37n48z4uhj63yxmf&st=lq7fc3hu&dl=0

Prospective bidders will notify FRS by email at nvestevich@frankrewold.com of their intent to bid and intended bid categories. Bid documents will be available only in the following manner: FRS Portal.

BIDDERS SHALL NOT CONTACT THE OWNER FOR DOCUMENTS.

Prebid Meeting
A non-mandatory walk-through is scheduled for Tuesday, February 17, 2026, at 9:00 a.m. Meet at 3200 West Tienken Road, Rochester Hills, Michigan 48306. Meet at the front entrance.

Bond Requirements
Provide pricing for a Payment and Performance Bond; do not include in base bid. In accordance with Michigan Compiled Laws Section 129.201, successful contractor(s) must obtain Performance and Payment Bonds for any bid category exceeding $50,000. The Performance and Payment Bonds shall be in an amount equal to the contract amount. The Performance and Payment Bonds shall be solely for the protection of ROCHESTER COMMUNITY SCHOOLS and Frank Rewold and Son Inc. and shall be executed by a surety company authorized to do business in the state of Michigan and be listed in Federal Register or have an AM Best Rating of B+ or better. All bonds are to be dual obligee bonds to Rochester Community Schools and Frank Rewold and Son Inc.

Equal Opportunity – Employment Policies
The Bidder agrees that it will not discriminate against any employee or applicant for employment because of race, religion, color, sex, national origin or age. The Contractor shall take affirmative action to ensure that applicants are employed, and that employees are treated during employment without regard to race, religion, color, sex, or national origin.

Bidder Qualifications

Bidders under consideration for award of the work shall provide evidence demonstrating a minimum of five (5) years' experience of successfully completing work of similar category and scope. Bidder shall provide evidence of financial ability to perform the work. Bidder shall provide evidence of bonding capability, as described by the project manual, whether or not bonding is required.

The Owner and Construction Manager shall be the sole determiner of the acceptability of the evidence presented.

Provision for Bidder Qualification does not supersede or negate Owner's rights.

Method of Bidding

Bids will be accepted only on forms provided. Proposal forms must be in a sealed envelope mailed or delivered in person to: Jennifer Fickel, C/O Frank Rewold and Sons Inc., 303 E. Third Street, Suite 300, Rochester, MI 48307 prior to the due date of 2:00 p.m., Tuesday, February 24, 2026. The outside of the envelope must be clearly marked with the bid category.

Bids must be for complete work within a single bid category. Partial bids are sufficient reason for rejection of the bid. If a bidder is bidding multiple bid categories, proposals must be submitted for each individual bid category and in individual envelopes. At the bidder's option, the bid form allows for a multiple bid category award discount.

Proposals shall be based upon all the bid documents, including the Advertisement for Bids, the Instructions to Bidders, Subcontractor Agreement, Construction Drawings, Project Manual and the Technical Specifications.

Bid Form

In order to receive consideration, make bids in strict accordance with the following:

Submit bids upon the forms provided, properly signed and with all items filled out. Do not change the wording of the bid form, and do not add words to the bid form. Unauthorized conditions, limitations, or provisions attached to the bid may be cause for rejection of the bid. If alterations by erasure or interlineation are made for any reason, explain over such erasure or interlineation with a signed statement from the Bidder.

Facsimiles (FAX) or email proposals will ***not*** be accepted.

Submit only (1) one copy of all bid documents.

The Owner reserves the right to keep all information concerning such bids confidential as permitted by law.

A sworn and notarized statement disclosing any familial relationship that exists between owner or any employee of bidder and any member of board of education or superintendent of Rochester Community Schools must accompany each bid proposal. The board of education will not accept a bid proposal that does not include this sworn and notarized disclosure statement.

A signed Iran Economic Sanctions Affidavit must also accompany each bid proposal. The board of education will not accept a bid proposal that does not include this affidavit.

A 5% bid security must also accompany each bid proposal. Bid bonds are preferred, however, certified or cashier checks will be acceptable for bids under $50,000. The board of education will not accept a bid proposal that does not include the bid security.

Examination of Documents and Site of Work

Before submitting a bid, each Bidder shall examine the drawings carefully, shall read the specifications and all other proposed contract documents, and shall visit the site of the work. Each Bidder shall fully inform himself prior to bidding as to existing conditions and limitations under which the work is to be performed, and shall include in his bid a sum to cover the cost of items necessary to perform the work as set forth in the proposed contract documents. No allowance will be made to a Bidder because of lack of such examination or knowledge. The submission of a bid will be considered as conclusive evidence that the Bidder has made such examination.

Withdrawal of Bids

A Bidder may withdraw his bid by requesting the withdrawal in writing at any time prior to the scheduled time for opening bids.

No Bidder may withdraw his bid for a period of sixty (60) calendar days after the date set for opening thereof, and bids shall be subject to acceptance by the Owner during this period.

Execution of Agreement

The Form of Agreement, which the successful Bidder will be required to execute, is the Construction Managers' Contractor-Subcontractor Agreement.

The Bidder to whom the contract is awarded shall, within five (5) calendar days after notice of award and receipt of Agreement Forms from FRS, sign and deliver required copies to FRS.

At or prior to delivery of the signed Agreement, the Bidder to whom the contract is awarded shall deliver to FRS those Certificates of Insurance and bonds required by the Owner. FRS shall approve certificates of insurance and bonds before the successful Bidder may proceed with the work. Failure or refusal to provide bonds or certificates of insurance in a form satisfactory to the Owner shall subject the successful Bidder to loss of time from the allowable construction period equal to the time of delay in furnishing the required material.

Interpretation of Contract Documents Prior to Bidding

If any company contemplating submitting a bid is in doubt as to the true meaning of any part of the contract documents, or finds any discrepancies or omissions in any part of the contract documents, they shall submit to FRS a written request for interpretation a minimum of 3 days prior to the bid due date. The person submitting the request shall be responsible for its prompt delivery.

Interpretation or correction of proposed contract documents will be made only by addendum or written correspondence and will be mailed or delivered to all who are known by FRS to have received a complete set of bidding documents. Neither the Owner, Architect, Engineer, nor FRS will be responsible for any oral explanations or interpretations of the proposed contract documents.

Each Bidder shall ascertain prior to submitting his bid that he has received all addenda issued and shall acknowledge their receipt on the Bid Form.

Taxes

All bids in original contract work, and for all other work thereunder, shall include all applicable taxes, including social security, unemployment, and any local, township, state, or federal government taxes, except real property taxes on the site.

Proposal shall also include all premiums, assessments, and other like payments, charges, and costs incidental to the work covered by the contract documents.

This entire project is <u>not</u> exempt from state sales tax.

Post Bid Information

Bidders to whom award of a contract is under consideration shall submit to FRS, upon request, a properly executed AIA Document A305, Contractor's Qualification Statement.

Bidders to whom award of a contract is under consideration shall submit to FRS a schedule of values that separately defines basic groups of material as well as their labor and generally limits line items to no greater than $50,000.

Bidders to whom award of a contract is under consideration shall submit to FRS a list of proposed subcontractors and suppliers.

Bid results will be posted by FRS on the FRS Portal approximately 48 hours after the bid opening. Bidders shall not contact the CM, Owner, or Architect for bid results.

Schedule of Work

The project will begin June 16, 2026, and conclude no later than August 1, 2026.
See Section G Project Milestone Schedule.

Bid Opening

The bid opening will be public with the owner and will take place at 2:00 p.m., Tuesday, February 24, 2026 at FRS corporate offices, 303 E. Third Street, Suite 300, Rochester, MI 48307, in the 4th floor mezzanine. Bids received after the due date or time as posted by the Advertisement for Bids or subsequent Addendum will be rejected.

Post Bid Conference

Low bidders will be required to attend post-bid interviews. Other bidders may also be requested to attend post-bid interviews.

Bid Documents

The Bid Documents consist of Instructions to Bidders, FRS Project Manual and bid category descriptions, drawings, and project specifications prepared by FRS.

Voluntary Alternates
All bids shall be in compliance with the bid documents. If a Bidder wishes to propose an alternative product or method, the alternate is to be identified on the proposal form as a Voluntary Alternate and the deduct value provided on the form with the description of the alternate. Voluntary Alternates shall not be included in the base bid amount. **Voluntary Alternates are encouraged and may be the basis for award of contract.**

Trade Alternates
Required alternates from individual trades will be defined within the bid category descriptions. All bidders must provide a response to any and all alternates listed in their bid category in the space provided on the Bid Form.

Mandatory Alternates
At times, portions of the work will be bid as mandatory alternates. These alternates will be defined within the architect's drawings. All bidders should review these alternates and are required to provide a response to the mandatory alternates in the space provided on the Bid Form.

Extra Work
Should extra work or charges occur during the project, each contractor will provide the following.

- An "estimate" of the cost if an exact total is not available
- Time sheets signed by Rewold's superintendent at the end of each day. Note names, specific location and description of work
- Backup from material/equipment suppliers showing copies of invoices, etc.
- Final pricing must be received within one (1) week of request.
- Contractor markup is limited to 10% of all costs

Note: No additional costs will be accepted if this information is not provided.

Required Meetings
All contractors will be required to attend our MOP meeting and Safety Orientation Presentation prior to beginning work on site.

All contractors will be required to attend weekly job meetings when requested by FRS. Attendees shall be the contractors project superintendent or foreman.

Owner's Rights
The Owner reserves the right to reject any or all bids in whole or in part and waive any informalities herein, when in the opinion of the Owner, such action will serve the best interest of the Owner.

The Owner reserves the right to award the contracts to whomever it elects.

The Owner reserves the right to accept alternates in any order or combination and to determine the low Bidder on the basis of the sum of the base bid and the alternates accepted.

The Owner reserves the right to negotiate with any Bidder without re-bidding the project in whole or in part.

The Owner reserves the right to accept combination bids for more than one bid category.

Document Information Discrepancy

If discrepancies occur between the bid category scope of work, individual specifications, drawings, or details, the Bidders will notify FRS prior to submitting a proposal. If a clarification is not issued, all Bidders will assume the most costly options and will include those costs within their proposal. No additional compensation will be granted should these conflicts be encountered through the duration of the project.

Insurance Requirements

Submission of this proposal signifies this contractor has read, understands, and will comply without exception to insurance requirements of Frank Rewold and Son Inc. as outlined on Pages 5 and 6, Item 13, labeled "Insurance and Indemnification" of the Subcontractor Agreement. A current Certificate of Insurance must be on file at our office before purchase orders will be issued.

- - General instruction notes to bidders follow - -

GENERAL NOTES TO BIDDERS

Applies to all bid categories and Bidders

A. FRS has been selected by the Owner as Construction Manager and shall have such authority with regard to each contractor as its agreement with the Owner allows.

B. Contractor shall coordinate its work all the contractors and Owner's Consultants and shall cooperate for the expedient completion of the project.

C. Contractor shall include, within their bid proposal, sufficient compensation as part of their scope of work for the following items.

   1. All taxes appropriate and payable except property taxes assigned to completed work.

   2. All licenses, and fees unless noted otherwise by the specifications.

   3. Restoration of damaged area outside of the project limits, or within the project limits when deemed by the Owner to be due to negligence.

   4. Unloading, movement, hoisting, and placement of material or equipment.

   5. All layout work, engineering, and field measuring required for the work of the individual trade.

   6. Off-site or on-site storage and security of equipment and material.

   7. Barricades, traffic controls, and all other safety measures relating to its work.

   8. Coring, cutting, and patching as required by the work.

   9. Cleanup on a daily basis, including placing of all debris in project dumpsters in an efficient manner. Failure to do so will result in FRS performing cleanup work and back charging the appropriate contractor. There will be no exceptions.

   10. Full-time on-site supervision during the performance of this work. The Supervisor will be responsible for coordination, scheduling of labor and equipment, safety, and other activities necessary to achieve the project safety, quality and scheduling requirements. The Supervisor shall not be removed or changed without prior consent and approval of FRS.

   11. Protection of all new and existing work as required to prevent damage from contractors or any other work. The installing contractor will make any required repairs to materials or work in place, which is not properly protected, at no cost to the Owner.

D. Location of material and equipment storage, vehicle parking, and staging areas shall be established only after approval of the FRS field superintendent.

E. Existing driveways, sidewalks, building entrances are not to be obstructed except with prior written authorization of FRS.

F. Contractor shall take all necessary safety precautions with respect to its own work and shall comply with all government regulations, Owner rules, and the FRS safety program. The contractor shall immediately report to FRS any injury to any of the contractor's employees.

G. Marked-up or reproduced Architect's drawings are not to be submitted as shop drawings.

H. Contractor shall maintain worker compensation insurance during the life of the contract, as required by the state of Michigan. Contractor shall also maintain comprehensive general liability insurance, as described in the Contract Agreement.

I. Contractor to provide product warranties in a form acceptable to the Owner for a term not less than one year, or as required by the specifications, commencing with substantial completion. Warranties shall be provided prior to final payment.

J. Contractor shall attend regular and special meetings as deemed necessary by the Owner or FRS.

K. All billings are to be submitted via email to accounting@frankrewold.com.

L. In the event contractor encounters on-the-site material reasonably believed to be asbestos, polychlorinated biphenyl (PCB), or other hazardous materials that have not been rendered harmless, contractor shall immediately stop work in the area affected and report the condition to FRS in writing.

M. Contractor shall be responsible to provide Safety Data Sheets (SDS) to FRS for any proposed materials or supplies to be used on site per OSHA Hazard Communications Standard and/or Michigan Right-To-Know Law.

N. Contractor shall be responsible for compliance with the current requirements, laws and ordinances regulating or prohibiting disposal of any contaminants and contaminated substances.

O. Prior to mobilizing on site, contractor shall meet with the project team to discuss and resolve any issues relating to material ordering, scheduling, safety, site conditions, site logistics, quality control, and sequencing of work. Prior to this meeting, contractor shall have provided a schedule of values, site specific safety manual, SDS data, insurance certificate, bond (if required), permits (if required), emergency contact information data, and a detailed working schedule to FRS.

P. Provide a copy of contractor's site-specific safety program.

Q. Contractor employees must attend FRS project specific safety orientation program, which includes review of our safety video, review of project specific written safety program, sign-in and employee identification requirements.

R. Contractor shall designate a safety representative(s) who will be working on site. Provide the safety representative's telephone and emergency telephone numbers. Safety rep must be CPR, first aid certified.

S. No smoking or chewing tobacco allowed anywhere in the building or site.

T. No radios/i-pod-like devices allowed within areas of construction.

U. Hard hats, safety glasses, proper footwear, and reflective high visibility top are to be worn 100% all the time.

V. Hoisting over occupied areas is not be permitted unless areas are vacated or a controlled access program is approved and initiated. A pre-lift plan is required.

W. Hot work permits shall be obtained from FRS for all cutting, torching, and grinding activities.

X. Shutdown notifications shall be obtained from FRS for interruptions to existing Owner operations, including utility shutdowns or modifications.

Y. 100% fall protection for all exposures 6' or greater will be enforced in all areas of work, for all workers.

Z. Toolbox safety talks will be completed on a weekly basis by each contractor. Sign-in sheets will be submitted to FRS as a condition of payment.

AA. Contractor within one (1) week after receiving a notice to proceed, shall start submitting required shop drawings, apply for local permits, submit product data and other required submittals to support project scheduling. Each submittal shall follow submittal procedures as identified.

BB. Furnish and deliver all materials required by this work, FOB jobsite. All deliveries shall be closely coordinated (minimum 48-hour notification) and approved by FRS prior to shipping. Materials can be delivered and staged on carts within certain areas as long as they are installed within 30 days of being delivered. Excessive, out-of-sequence and early delivery of materials will be prohibited and subject to re-handling and removal off site as directed by FRS.

CC. Working hours will be defined by FRS and local ordinance. Any deviation from these may result in a back charge for FRS Superintendent overtime.

DD. Any work that the contractor feels is a change to the contract must be brought to the attention of FRS within 10 calendar days with signed field tickets. Failure to do so will result in forfeiture of any monies owed.

EE. All punch list items must have completion approved by FRS within 10 business days of issuance of punch list. Failure to do so will result in FRS completing the work and back charging the contractor.

FF. Contractor proposal IS NOT part of the contract document unless specifically noted with the Contractor Agreement. Any exclusion not specifically written into the Contractor Agreement will not be acknowledged.

GG. Contractor acknowledges and agrees the work within their contract may not be completed in a single mobilization and that their bid includes as many mobilizations as required to complete the project as scheduled by FRS.

HH. All contractors should note that there will not be any extras allowed except for requested added scope. Any work that can be inferred from the drawings and/or specifications must be included in the base bid.

II. If any contractor cannot maintain the schedule, they will be required to work overtime at the contractor’s expense, including any additional expense for FRS personnel.

JJ. If any contractor fails to properly staff the project or cannot maintain the schedule, FRS may hire additional companies or labor, at the contractor’s expense, to complete the contractor’s work any time after 48 hours written notice.

KK. Contractors are to have trained and qualified personnel completing all work. Any personnel FRS deems to be unqualified can be removed from the site at any time.

PROJECT SPECIFIC NOTES TO BIDDERS
Applies to all bid categories and Bidders

1. Daily Cleanup – All on-site personnel will spend a minimum 15 minutes at the end of each day cleaning up the site including picking up trash and debris, sweeping floors, and hauling trash to the appropriate dumpsters.

2. Site Security:
   a. All persons entering the site will be required to sign in at the job-site trailer or school office.

   b. All persons entering the site shall have proper identification consisting of a visible company badge, company logo clothing, or hard hat with FRS sticker.

   c. All deliveries entering the site will be required to check in at the job-site trailer or school office.

3. The project site is located on a highly visible and public property and requires the utmost care and consideration for the property and its visitors. Therefore:

   a. There will not be any smoking or tobacco use allowed on the property.

   b. All personnel will be required to stay within the construction limits at all times. Pre-approval by the owner will be required for any work outside the boundaries.

   c. Any inappropriate interactions with the property staff, students, or visitors will be reason for immediate removal from the site.

   d. The public will be adjacent to the construction activities so all site personnel are expected to act appropriately at all times including no vulgar language, no radios, no inappropriate activities, and no unwanted interactions with the public. Warnings will be provided, but removal from the site will be an option.

4. Standard work hours for this project 7:00 to 3:30 Monday through Friday. FRS personnel are to be on site during all work hours so any contractor working outside those hours may be required to reimburse FRS for their additional hours.

5. Contractor shall provide one hard copy and one electronic copy of all operation and maintenance manuals, as-built drawings and other closeout documents specified by the project documents or as deemed appropriate by the Owner.

6. Any damage to existing facilities, existing landscaping, or new installed work is to be reported immediately by anyone and everyone that notices it. If it is not reported, all contractors on site will split the cost of repairs.

7. ProCore: The project will be managed via ProCore and all contractors must participate. If needed, FRS will provide training.

8. All project submittals, samples, closeout documents, etc. are to be delivered to FRS corporate office at 303 E. Third St., Suite 300, Rochester, MI 48307, attention Anthony Gonzales.

9. Contractors are not to include any costs for third party inspections in their base bid. However, contractors are to cooperate and coordinate their work with FRS and the inspecting agency as required.

10. Contractors are not to include any allowances in their base bid, even if specifically listed in the project documents, unless specifically noted in the bid scope.

11. Contractors are not to include any service and/or maintenance services in their base bid even if specifically listed in the project documents. Provide any additional cost for specified services under the trade alternate section on the bid form.

12. Contractors are not to include any costs in their base bid for temporary utility usage costs, unless specifically noted in the bid scope.

13. Contractors are not to include any costs in their base bid for winter conditions, temporary roads, temporary walls or enclosures, temporary facilities, private utility markings, general floor protection, or final cleaning, unless specifically noted in the bid scope.

14. Contractors are not to include any utility company fees or costs within their base bid unless specifically noted in the bid scope. However, contractors are to cooperate and coordinate their work with the respective utilities as required.

15. All bids are to be based on the specifications including materials, equipment, etc. being provided by any of the listed suppliers or manufacturers. However, if a bid is based on a supplier or a manufacturer other than the one listed for the basis of design, the contractor must note this under the voluntary alternate section on the bid form.

16. Contractor to provide standard one-year labor and workmanship warranty in base bid.

PROJECT BID SCOPES

The notations on the following pages are specific to the bid category mentioned. These notes are presented to clarify certain portions of the work to be performed under the bid category. The notes are not to be construed as a complete itemization of work included in the bid category or do they relieve the contractor of their responsibility to deliver a complete job in accordance with plans and specifications.

Nothing contained in the bidding documents, including the bid category descriptions, shall be construed as an assignment of work to any construction trade. Each contractor is responsible for its own work assignments when making this proposal. Information regarding scheduling of work is provided within the specific notes. Final complete schedule will be prepared after award of work.

Bid Category A – Millwork

Work for this bid category includes, but is not limited to:

1. The requirements of the General Notes To Bidders Section.

2. Furnish and install all new countertops and backsplashes.

3. Provide all caulking and sealants of millwork and casework to dissimilar materials.

4. Provide cutouts in solid-surface countertops for other work where required.

5. Provide all anchors, fasteners, supports, filler panels, etc. as required for a complete installation.

6. Coordinate installation of work with the plumbing contractor.

Project specific work for this bid category includes, but is not limited to:

A. The requirements of the Project Specific Notes To Bidders.

B. Remove and dispose of countertops and backsplashes.

C. Note: (1) existing counter mounted cooktop – remove and reinstall in cut out in new countertop.

D. Note: (1) existing ADA sink countertop – remove and install new ADA compliant sink countertop with ADA front panel and new sink (see drawing for location).

E. Provide pencil round edges at all exposed edges including sink cut outs.

F. Note 18” backsplashes terminate at bottom of upper cabinets.

G. Countertop specification

    a. Description: Solid surface countertop
    b. Manufacturer: Corian
    c. Color: Clam Shell
    d. Thickness: ½”

H. Sink specification: Elkay crosstown 16-gauge stainless steel 30-1/2”x18-1/2”x8” Single Bowl Undermount sink Model EFRU2816T. Please see submittal attached.

I. Reference floor plan and drawings on portal for sizes and locations of countertops and backsplashes.

Exclude

1. The exclusions noted in the Project Specific Notes To Bidders

2. Work on existing cabinets, except as required for installation of new countertops.

3. Electrical rework

Mandatory Alternates

Mandatory alternate pricing is not required for this bid category.

Trade Alternates
Tarde alternate pricing is not required for this bid category

Unit Costs
Unit cost pricing is not required for this bid category.

-- End --

Bid Category B – Plumbing

Work for this bid category includes, but is not limited to:

1. The requirements of the General Notes To Bidders Section.

2. Furnish and install new sinks.

3. Furnish and install all hangers, supports, fasteners, etc. as required for the work of this trade.

4. Furnish and install all required caulking and sealant work of this bid category. Include sealing all plumbing fixtures at points of contact with countertops.

5. Coordinate installation of work with the millwork contractor.

Project specific work for this bid category includes, but is not limited to:

A. The requirements of the Project Specific Notes To Bidders.

B. Remove and dispose of existing sinks.

C. Reuse existing water lines within cabinets.

D. Reuse existing drain lines within cabinets as much as possible. Existing sinks are double bowl where as new sinks are single bowl.

J. Sink specification: Elkay crosstown 16-gauge stainless steel 30-1/2”x18-1/2”x8” Single Bowl Undermount sink Model EFRU2816T. Please see submittal attached.

E. Remove and reinstall existing faucets.

F. Reference floor plan drawings on portal for quantity and location of sinks.

G. Remove and reinstall existing garbage disposals.

Exclude

1. The exclusions noted in the Project Specific Notes To Bidders

2. Cut out in countertops

3. Removal or reinstallation of cooktop.

4. Permits

5. Electrical rework

Mandatory Alternates

Mandatory alternate pricing is not required for this bid category.

Trade Alternates

Trade pricing is not required for this bid category

Unit Costs

Mandatory unit cost pricing is not required for this bid category.

-- End --

ELKAY
Crosstown
SPECIFICATIONS

Crosstown® 16 Gauge Stainless Steel 30-1/2" x 18-1/2" x 8" Single Bowl Undermount Sink
Model(s) EFRU2816T

PRODUCT SPECIFICATIONS

Crosstown® 16 Gauge Stainless Steel 30-1/2" x 18-1/2" x 8" Single Bowl Undermount Sink. Sink is handmade/fabricated from 16 gauge 304 Stainless Steel with a Polished Satin finish, Rear Center drain placement, and Full spray sides and bottom with Sides and Bottom pads.

Installation Type:	Undermount
Material:	304 Stainless Steel
Finish:	Polished Satin
Gauge:	16
Sound Deadening:	Full spray sides and bottom with Sides and Bottom pads
Number of Bowls:	1
Sink Dimensions:	30-1/2" x 18-1/2" x 8"
Bowl 1 Dimensions:	28" x 16" x 8"
Drain Size:	3-1/2" (89mm)
Drain Location:	Rear Center
Minimum Cabinet Size:	36"
Mounting Hardware:	Part # 54300008 included
Template Included:	Yes
Cutout Template #:	1000001302

Template is available for download at elkay.com. CAD software will be required to open the template.

Special Note: Reserve Selection products are sold exclusively, in-store and online, through authorized wholesalers.

Installation Profile:

1/8" OVERHANG

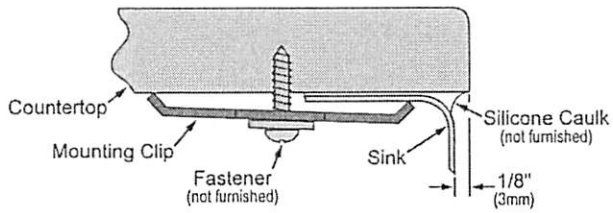

Designed to affix to the underside of any solid surface countertop.

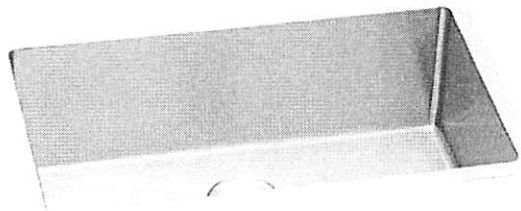

A Century of Tradition and Quality.
For more than 100 years, Elkay has been making innovative products and providing exceptional customer care. We take pride in offering plumbing products that make life easier, inspire change and leave the world a better place.

KBB READERS' CHOICE AWARDS 2024 WINNER

Product Compliance: ASME A112.19.3/CSA B45.4

Sinks are listed by IAPMO® as meeting the applicable requirements of the Uniform Plumbing Code®, International Plumbing Code®, and National Plumbing Code of Canada.

Clean and Care Manual (PDF)
Installation Instructions (PDF) - 1000005239
Warranty (PDF)

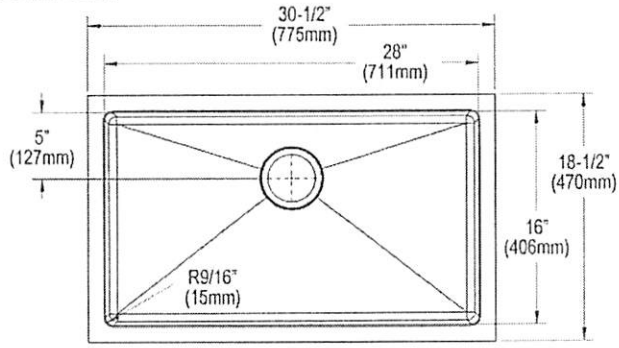

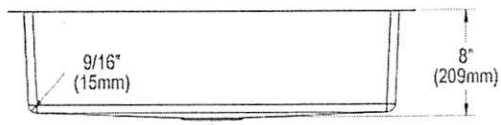

PART:_____ QTY: _____

PROJECT:_____

CONTACT:_____

DATE:_____

NOTES:_____

APPROVAL:_____

In keeping with our policy of continuing product improvement, Elkay reserves the right to change product specifications without notice. Please visit elkay.com for the most current version of Elkay product specification sheets. This specification describes an Elkay product with design, quality, and functional benefits to the user. When making a comparison of other producers' offerings, be certain these features are not overlooked. Latest version of the spec sheet available: https://www.elkayfiles.com/spec-sheets/EFRU2816T_spec.pdf

Optional Accessories		
CTXBG2614	Crosstown® Stainless Steel 26-3/8" x 14-3/8" x 1-1/4" Bottom Grid Spec Sheet (PDF)	
LK35	3-1/2" Drain Fitting Type 304 Stainless Steel Body Strainer Basket and Tailpiece Spec Sheet (PDF)	
LKDD	3-1/2" Drain Fitting Deep Strainer Basket Spec Sheet (PDF)	
LKAV1031	Elkay Avado Single Hole Kitchen Faucet with Pull-down Spray and Forward Only Lever Handle Spec Sheet (PDF)	
LKAV2031	Elkay Avado Single Hole Kitchen Faucet with Semi-professional Spout and Forward Only Lever Handle Spec Sheet (PDF)	

In keeping with our policy of continuing product improvement, Elkay reserves the right to change product specifications without notice. Please visit elkay.com for the most current version of Elkay product specification sheets. This specification describes an Elkay product with design, quality, and functional benefits to the user. When making a comparison of other producers' offerings, be certain these features are not overlooked. Latest version of the spec sheet available: https://www.elkayfiles.com/spec-sheets/EFRU2816T_spec.pdf

PRODUCT SPECIFICATIONS

Avado® Single Hole 2-in-1 Kitchen Faucet with Filtered Drinking Water. Faucet has a flow rate of 1.5 GPM, and is made of Brass material, with a Ceramic Disc valve. Faucet requires 1 faucet holes.

Mounting Type:	Deck Mount
Spray Type:	Pull Down
Finish:	Chrome (CR), Lustrous Steel (LS), Matte Black (MB)
Handle Type:	Lever Handle
Deck Clearance:	9-13/16"
Spout Reach:	8-3/4"
Spout Height:	17-1/8"
Hole Drillings:	1
Material:	Brass
Valve Type:	Ceramic Disc
Valve Connection:	1/2"-14 NPSM
Flow Rate:	1.5 GPM
Faucet Hole Size (min):	1-3/8"
Countertop Thickness:	2-1/2
Spout Type:	Pull-down Spray
Spray Functions:	Aerated

Faucet Part Number	Finish
2000000331	Chrome
2000000332	Lustrous Steel
2000000346	Matte Black

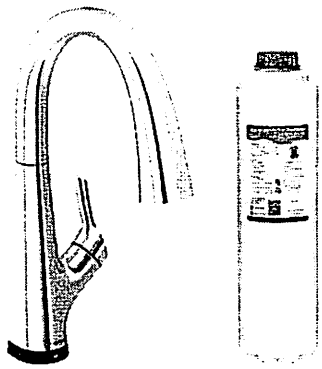

Included with Product: **Faucet with Filter 71300C and Deck Plate / Escutcheon LK134**

A Century of Tradition and Quality.
For more than 100 years, Elkay has been making innovative products and providing exceptional customer care. We take pride in offering plumbing products that make life easier, inspire change and leave the world a better place.

Product Compliance: ADA & ICC A117.1
ASME A112.18.1/CSA B125.1
CEC
NSF 61 (Q≤1)
NSF 372 (lead free)

Accessory: NSF 42
NSF 53
NSF 401

Complies with ADA & ICC A117.1 accessibility requirements when installed according to the requirements outlined in these standards.

Clean and Care Manual (PDF)
Installation Instructions (PDF) - 2000000348
Warranty (PDF)

PART:_____ QTY: _____
PROJECT:_____
CONTACT:_____
DATE:_____
NOTES:_____
APPROVAL:

In keeping with our policy of continuing product improvement, Elkay reserves the right to change product specifications without notice. Please visit elkay.com for the most current version of Elkay product specification sheets. This specification describes an Elkay product with design, quality, and functional benefits to the user. When making a comparison of other producers' offerings, be certain these features are not overlooked.

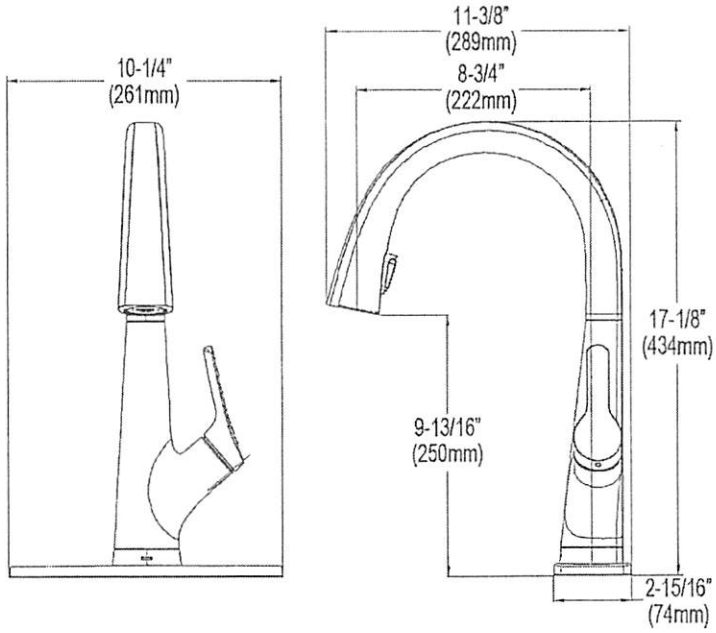

Included Accessories		
71300C	WaterSentry® PFOA/PFOS (PFAS) + Lead + Microplastics NSF/ANSI Certified 2250 Gal 12 Month Filter Spec Sheet (PDF)	

Optional Accessories		
71300C	WaterSentry® PFOA/PFOS (PFAS) + Lead + Microplastics NSF/ANSI Certified 2250 Gal 12 Month Filter Spec Sheet (PDF)	

In keeping with our policy of continuing product improvement, Elkay reserves the right to change product specifications without notice. Please visit elkay.com for the most current version of Elkay product specification sheets. This specification describes an Elkay product with design, quality, and functional benefits to the user. When making a comparison of other producers' offerings, be certain these features are not overlooked.

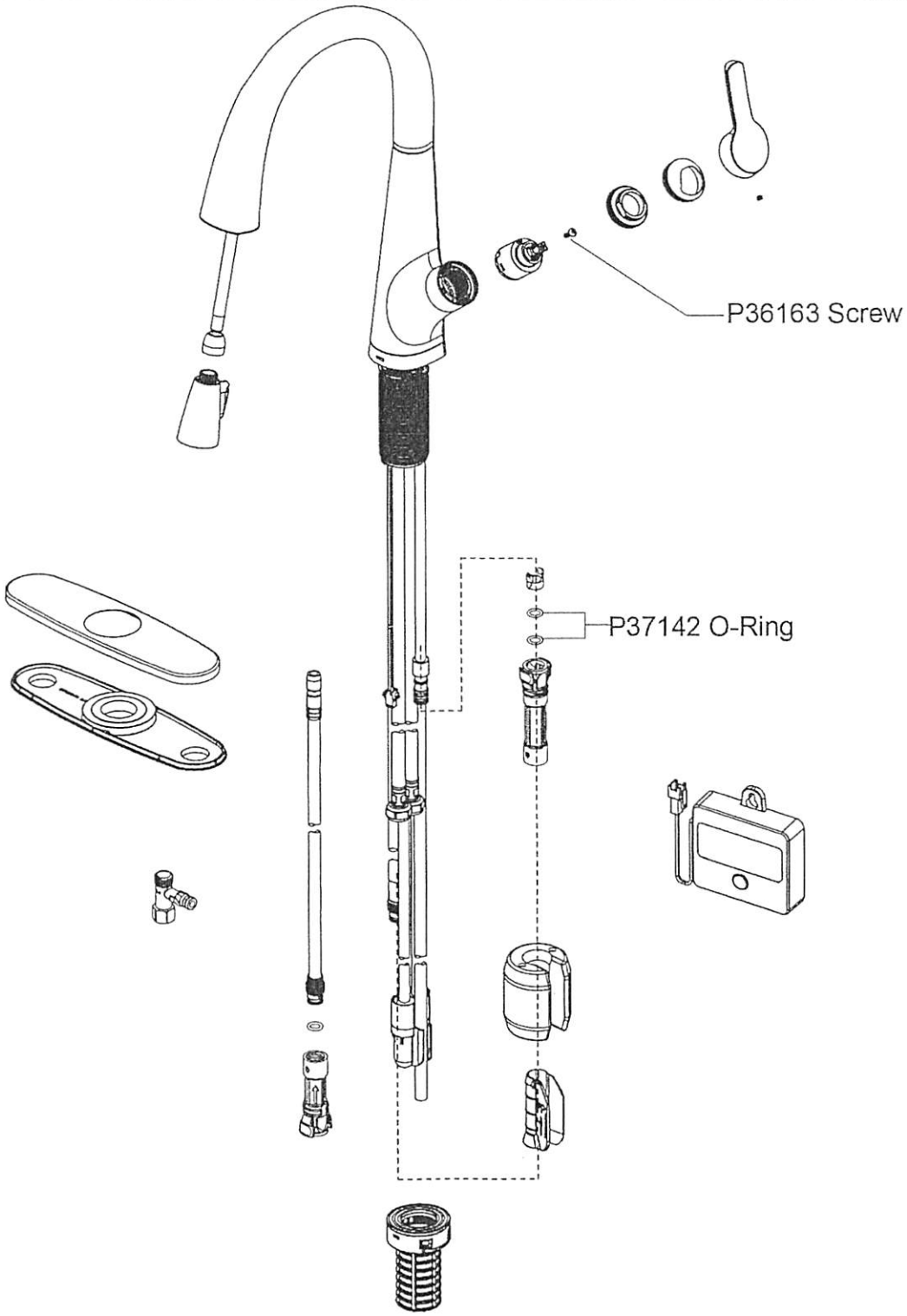

In keeping with our policy of continuing product improvement, Elkay reserves the right to change product specifications without notice. Please visit elkay.com for the most current version of Elkay product specification sheets. This specification describes an Elkay product with design, quality, and functional benefits to the user. When making a comparison of other producers' offerings, be certain these features are not overlooked.

303 East Third St., Suite 300 · Rochester, MI 48307
(248) 651-7242
www.frankrewold.com

BID PROPOSAL FORM

PROJECT: Rochester Community Schools - 2020 Sinking Fund - Adams HS Food Room Countertops

TO: Jennifer Fickel, Purchasing Supervisor - Rochester Community Schools
C/O Frank Rewold & Sons Inc.
Deliver to:
Frank Rewold and Sons Inc.
303 East Third St., Suite 300
Rochester, MI 48307

FROM: (Company Name)

Pursuant to and in compliance with the Instructions To Bidders and other documents relating thereto, the undersigned proposes and agrees to furnish equipment, materials, and labor and perform all work necessary to complete that portion of work indicated below as identified on the drawings. Unless specifically excluded, Contractor includes the work as described in the individual bid category descriptions without exception.

Base Bid
Note: The amounts for base bids shall be shown in both words and figures. In case of a discrepancy, the amount shown in words shall govern. Base bid shall include sales tax.

Bid Category: Please Select One

Lump Sum Amount (written):

Dollars: $

Add for Performance, Payment, and Labor Bond Costs

Lump Sum Amount (written):

Dollars: $

Multiple Award Discount
The Owner may choose to award more than one bid category to a Bidder. If your firm is submitting proposals on more than one bid category and are offering a discount if multiple awards are made to your firm, clearly describe the discount below (percentage, lump sum, etc.):

List Bid Categories:

Total Discount: $

Mandatory Project Alternates

These alternates are to be quoted by all bidders. See the FRS Project Manual for complete descriptions.

Not applicable $

Please Select $

Please Select $

Please Select $

Please Select $

Please Select $

Please Select $

Please Select $

Please Select $

Please Select $

Please Select $

Please Select $

Please Select $

Please Select $

Mandatory Trade Alternates

Where required by the bid scope category, provide requested alternate pricing:

Not applicable $

Please Select $

Please Select $

Please Select $

Please Select $

Please Select $

Voluntary Alternates

Please verify if base bid includes: Specified basis of design equipment or materials ☐
Other listed acceptable equipment or materials ☐

Base bids must be made on work as shown and described by the bid documents. If your firm is offering an alternative installation or method describe below and include the amount to be deducted or added to your base bid:

Please Select

Description Please Select $_____

Description Please Select $_____

Description Please Select $_____

Description Please Select $_____

Unit Prices

All bidders are to provide their **billable hourly rates** either below or on a separate attachment. Hourly billable rates are to include overhead, profit, and all office staff.
Where required by the specification or bid scope, provide unit price information below:

Description	Cost:	Per:
Description	Cost:	Per:
Description	Cost:	Per:
Description	Cost:	Per:
Description	Cost:	Per:
Description	Cost:	Per:
Description	Cost:	Per:
Description	Cost:	Per:
Description	Cost:	Per:
Description	Cost:	Per:

Costs and Fees for Additional Work

The undersigned agrees that he will, when so instructed by FRS in writing, perform additional work at the unit costs listed above. For work not described by a unit cost, compensation will be at the following cost and fees:

For extra work performed with FRS's written authorization by Bidder's own forces, direct costs plus a 10% fee.

For extra work performed with FRS's written authorization by Bidder's subcontractor forces, direct costs plus a 10% fee.

Direct cost shall include labor, material, tools, equipment and services. The fee shall include all overhead and profit.

Taxes

This project is not exempt from state sales tax. The undersigned understands that state and local sales and use taxes and federal taxes on materials used in construction are applicable to this work and are included in this base bid.

Addenda and Bid Memorandum

The undersigned acknowledges the receipt of the following bid Memorandum and includes the cost of the work in this proposal.

Bid Memorandum #: Dated:

Bid Memorandum #: Dated:

Bid Memorandum #: Dated:

Bid Memorandum #: Dated:

Bid Security

Bid security **is** required for this project. A bid security in the amount of five percent (5%) of base bid shall accompany **all** proposals. Bid bonds are required, however, certified or cashier checks will be acceptable for bids under $50,000.

Withdrawal of Bids

The undersigned agrees that their proposal shall not be withdrawn for a period of sixty (60) days after the day set for receipt of proposal.

Document Information Discrepancy

If discrepancies occur between the bid category scope of work, individual specifications, drawings, or details, the bidding contractors will notify FRS prior to submitting a proposal. Should no clarification be issued, all bidding contractors will assume the most costly options and include those costs within their proposals. No additional compensation will be granted should these conflicts be encountered through the duration of the project.

Insurance Requirements

Submission of this proposal signifies this Bidder has read, understands, and will comply without exception to insurance requirements of the AIA Contract Documents. A current Certificate of Insurance **must** be on file at our office before purchase orders will be issued.

☐ Bidder acknowledges they can meet or exceed the insurance requirements

Contract Requirements

Submission of this proposal signifies this Bidder has read, understands, and will comply without exception to the Subcontract Agreement.

☐ Bidder acknowledges they accept the contract documents.

Scope Requirements

Submission of this proposal signifies this Bidder has read, understands, and will comply without exception the general notes to Bidders, the project specific notes to Bidder, and the project bid scope for this bid category.

☐ Bidder acknowledges they accept the scope requirements.

Schedule

Submission of this proposal signifies this Bidder has read, understands, and will comply with the project schedule provided in the FRS Project Manual.

☐ Yes, Bidder will comply with schedule

☐ No, Bidder can not comply with schedule

Bidders average daily crew size:

Bidders estimated labor hours:

Acceptance

The undersigned agrees to execute a contract for the work covered by this proposal, provided he/she is notified of its acceptance within sixty (60) days of the bid due date. This contractor also agrees to comply with the information provided within as it relates to schedule, overtime, extra work, bid category descriptions, etc.

Authority to Sign

The individual signing this proposal warrants they have the authority to obligate the company to the provisions and requirements of the project documents.

Company Name:

Address:

City: State: Zip Code:

Telephone Number:

Email Address:

Signature: _____ (Form must be printed and signed)

Date:

Other Items

Our current EMR Rating is:

The following Iran Economic Sanctions Act Compliance Form must be executed and submitted.

The following Bidder Affidavit / Familial Disclosure Statement must be executed and submitted . A 5% Bid Security must be attached. A bid bond if bid is over $50,000 or a certified or cashiers check is acceptable if bid is under $50,000.

Bidder Clarifications – if required by bidder attach and submit with bid from.

PROVIDE ONLY (1) COPY OF ALL PROPOSAL DOCUMENTS

CERTIFICATION OF COMPLIANCE – IRAN ECONOMIC SANCTIONS ACT
Michigan Public Act No. 517 of 2012

The undersigned, the owner, or authorized officer of the below-named company (the "Company"), pursuant to the compliance certification requirement provided in the Rochester Community Schools' Request For Proposal (the "RFP"), hereby certifies, represents, and warrants that the Company (which includes its officers, directors and employees) is not an "Iran Linked Business" within the meaning of the Iran Economic Sanctions Act, Michigan Public Act No. 517 of 2012 (the "Act"), and that in the event the Company is awarded a contract by Rochester Community Schools or Frank Rewold and Sons, Inc. as a result of the aforementioned RFP, the Company is not and will not become an "Iran Linked Business" at any time during the course of performing any services under the contract.

The Company further acknowledges that any person who is found to have submitted a false certification is responsible for a civil penalty of not more than $250,000.00 or two (2) times the amount of the contract or proposed contract for which the false certification was made, whichever is greater, the cost of the Rochester Community Schools' investigation, and reasonable attorney fees, in addition to the fine. Moreover, any company who submits a false certification shall be ineligible to bid on a request for proposal for three (3) years from the date the company submitted the false certification.

Company Name:

Address:

City: State: Zip Code:

Telephone Number:

Email Address:

Signature: _____ (Form must be printed and signed)

Date:

AFFIDAVIT OF BIDDER
(Familial Disclosure Statement)

The undersigned, the owner or authorized officer of _____ (the "Bidder"), pursuant to the familial disclosure requirement provided in the Rochester Community Schools' Request For Proposal (the "RFP"), hereby represent and warrant, except as provided below, that no familial relationships exist between the owner(s) or any employee of _____ _____ and any member of the Board of Education of the School District or the Superintendent of the School District.

List any Familial Relationships:

Please Select

- ☐ Nicholas Russo, Superintendant of Schools
- ☐ Michelle Bueltel, Board Member
- ☐ Barb Anness, Board Member
- ☐ Jessica Gupta, Board Member
- ☐ Dr. Julie Alspach, Board Member
- ☐ Carol Beth Litkouhi, Board Member
- ☐ Shelley Lauzon, Board Member
- ☐ Jayson Blake, Board Member

Company Name:

Address:

City: State: Zip Code:

Telephone Number:

Email Address:

Signature: _____ (Form must be printed, signed and notarized)

Date:

STATE OF _____
COUNTY OF _____

This instrument was acknowledged before me on the _____ day of _____, 2023,
by _____.

_____
, Notary Public
_____ County, _____ State

My Commission Expires: _____
Acting in the County of: _____

Rochester Community Schools
AHS Food Room Countertops

PROJECT MILESTONE SCHEDULE

Activity	Date
Bids Due	02/24/26
Board Approval	03/09/26
Letter of Intent Issued	03/11/26
All Submittals Received By	05/01/26
Work Begins	06/15/26
Work Completed	08/01/26

Subcontract Agreement

1. Prime Contract: Subcontractor acknowledges that Frank Rewold & Sons Inc. (Contractor) has agreed to furnish certain labor and materials (the Work) to the project (the Project) described in this Subcontract (Subcontract) pursuant to a certain contract between Contractor and the Owner of the Project (the Prime Contract) , a copy of which has been made available to Subcontractor. Subcontractor shall be bound by the terms of the Prime Contract and all documents incorporated therein, including, without limitation, the general , supplemental and special conditions, and Subcontractor assumes toward Contractor, with respect to the Work, all of the obligations and responsibilities that the Contractor has assumed toward the Owner under the Prime Contract.

Subcontractor specifically agrees to be bound by all obligations and requirements in the Prime Contract to pay prevailing wages when applicable and at all times shall provide Contracto r with all documents reasonably requested by Contractor, demonstrating that Subcontractor is in full compliance with the Prime Contract with regard to the payment and documentation regarding prevailing wages.

2. Performance of the Work. Subcontractor shall furnish and perform the Work in a 9°od and workmanlike manner and in strict accordance with this Subcontract and the Prime Contract, all applicable laws, codes, ordinances and regulations and the plans and specifications described on the first page of this Subcontract (the Plans and Specifications) (collectively, as the same may be amended, modified and/or supplemented in accordance with the provisions of this Subcontract, the Contract Documents). If a conflict exists between or within the Plans and/or Specifications, Subcontractor shall comply with the provision that imposes the greater duty. Subcontractor represents and agrees that it: (i) has carefully examined and understands the Contract Documents ; (ii) has investigated the nature, locality and site of the Work and the conditions and difficulties under which it is to be performed ; (iii) enters into this Subcontract on the basis of its own examina tion, investigation and evaluations of all such matters; (iv) does not reply upon any opinions or representations of Contracloi or Owner or of any of their officers, agents, partners, members, shareholders or employees except as expressly set forth in the Contract Documents ; and (v) is licensed to perform the Work (if so required by applicable law) and, otherwise, is qualified to perform the Work. Subcontractors must provide evidence of their Worker's Compensation Experience Modification Rating (EMR) to Frank Rewold & Sons Inc. prior to awara of any subcontract and any EMR exceeding 1.0 will require explanation, which is subject to review and approval. Subcontractor is to notify Frank Rewold & Sons Inc. if at any time during the term of the subcontract its EMR rises above 1.0. Gontractor makes no warranty or representation that the Plans or Specifications meet all governmental laws, codes, ordinances or regulalions now existing or hereafter promulgated .

3. Terms of Payment. The Owner's payment to Contractor for the Work is an express condition precedent to Contractor's obligations to pay Subcontractor hereunder. The contract amount shall be payable to Subcontractor as follows :

(a) Not less than ten (10) days prior to Subcontractor's first application for payment, Subcontractor shall provide to Contractor a Schedule of Values allocating the entire contract amount among the various portions of the Work, which Schedule of Values shall be prepared in such a form and supported by such data to substantiate its accuracy as Contractor may require. The Schedule of Values shall be used as a basis for reviewing each application for payment.

(b) Contractor shall pay Subcontractor within ten (10) business days following Contractor's receipt of (i) payment from the Owner of the Project with respect that portion of the Work for which Subcontractor seeks payment; and (ii) proper waivers of lien and sworn statements from Subcontractor and any subcontractors, suppliers and laborers furnishing labor or material through or under Subcontractor.

(c) Applications for payment shall show the percentage completion of each portion of the Work as of the end of the period covered by the application for payment. The percentage completion shall be the lesser of (i) the percentage of that portion of the Work which has actually been completed or (ii) the share of the contract amount allocated to that portion of the Work in the Schedule of Values.

(d) Subject to other provisions of the Contract Documents the amount of each progress payment shall be computed as follows:

(i) Take that portion of the contract amount properly allocable to completed Work as determined by multiplying the percentage completion of each portion of the Work by the share of the contract amount allocated to that portion of the Work in the Schedule of Values, less retainage of ten percent (10%).

(ii) Subtract aggregate of previous payments made by Contractor.

(iii) Subtract amounts that are determined to have been improperly paid to Subcontractor pursuant to previous applications for payment as a result of errors subsequently discovered by Contractor.

(e) Retainage and the unpaid balance of the contract amount shall be paid within ten (10) days after the last of the following to occur:

(i) Final completion of the Work in accordance with the Contract Documents (including, without limitation, all punch list work).

(ii) Acceptance of the Work by Contractor, the Owner of the Project and the Project Architect.

(iii) Proper evidence that all entities supplying labor and/or material in connection with the Work have been fully paid (including all fringe benefits) and Contractor's receipt of as-built drawings of the Work and all operation manuals and written warranties and guaranties contemplated by the Gontract Documents.

(f) No payments made under this Subcontract shall be construed as evidence of Subcontractor's proper or complete performance of the Work or Subcontractor's obligations hereunder, and no payment shall be construed to be an acceptance of defective Work.

(g) Subcontractor agrees to promptJy pay the amounts due to all subcontractors, consultants, suppliers and laborers furnishing labor and/or materials to the Project through or under Subcontractor.

(h) Subcontractor shall not stop the Work in the event of a dispute as to payments owed provided that all uncontested amounts properly due Subcontractor have been paid in accordance with this Subcontract.

(i) All payment requests shall be submitted on AIA G702/G703 Application and Certificate for Payment forms or such other form as required by Contractor with an accompanying Sworn Statement in accordance with the billing date set forth in this Subcontract Said request shall not include unapproved change order work and may be rejected if unapproved change order work is included on the payment request.

4. Commencement and Completion. Subcontractor agrees that its Work will be begin by the stall date set forth in the Project schedule prepared by the Contd actor and shall be con pleted by the date set forth in the Contractor's most recent schedule for completion of the Subcontractor's Work. Subcontractor shall sequence and complete the Work as to insure that the Contractor completes the entire Project by the Completion Date as required under the Prime Contract. Subcontractor recognizes that Contractor shall suffer financial loss if the Work is not completed within the time specified above and further agrees that Subcontractor shall be liable to Contractor therefore.

5. Attendance at Meetings i Updated Work Schedule. A duly authorized representative of Subcontractor shall attend all periodic job meetings held on site at Contractor's field office or such other location as reasonably may be designated by Contractor, at which time Subcontractor shall present an updated Work Schedule subject to Contractor's approv at and be prepared to discuss the details of the Work. In addition to Subcontractor's obligation to provide updated Work Schedules to C ontraclor at periodic job meetings, Subcontractor shall provide Contractor with updated Work Schedules at such other times as Contractor may request from time to time through the course of construction.

6. Supervision of C onstruction. Subcontractor shall supervise the Work using its best skill and attention. Subcontractor shall be solely responsible for all construction means, methods, techniques , sequences, and procedures, and for coordinating all portions of the Work or the requirements of the Plans and Specifications. Subcontractor shall be responsible to Contractor for the acts and omissions of its employees, subcontractors and their agents and employees, and other persons performing any of the Work through or under Subcontractor. Subcontractor shall at all times enforce strict discipline and good order among its employees and those under it performing work, and shall not employ on the Work any unfit person or anyone not skilfe d in the task assigned to him or her. Subcontractor shall also be liable for any fines/viol ations/remediation for causing or allowing employees to work in an unsafe environment as deemed by MIOSHA/OS HA requirements.

7. Work of Others. Should Subcontractor, its subcontractors or suppliers cause damage to the Work of any other contractor, subcontractor and/or supplier on the Project, Subcontractor agrees to compensate such other contractor subcontractor and/or supplier to the extent of its/their damage. If Subcontractor fails to pay such costs within ten (10) days after receipt of written notice from Contraclor, Contractor may deduct the amount thereof from any sums due or to become due Subcontractor hereunder.

8. Cleanup and Removal. Subcontractor shall maintain the areas in which it performs the Work in a clean, neat and safe condition and shall comply promptly with instructions from Contractor with respect thereto, upon completion of each stage, or when requested by Contractor. Subcontractor shall remove from the areas in which it performs the Work, to the satisfaction of Contractor, all of Subcontractor's rubbish, debris, materials, tools and equipment; and if Subcontractor fails to do so promptly , Contractor may, after twenty-four (24) hours' notice to Subcontractor, remove the same to any place of storage or dumping ground, at Subcontractor's risk and expense and without responsibility for loss, damage or theft. All storage or removal costs incurred by Contractor shall be deductible from any payment or balance due Subcontractor hereunder.

9. Theft, Loss, and Damage to Work. Subcontractor shall be responsible for any loss, damage, or theft of its materials, work performed, and equipment pending completion of the Work. In the event such loss, damage, or theft should occur; Subcontractor shall not be relieved of its contractual responsibility to perform all Work prior to the Completion Date and in accordance with the Schedule.

10. Lien Waivers; Trust Fund: Miscellaneous Rights of Contractor.

(a) Subcontractor shall pay, or cause to be paid in full, for all materials, labor, and any and all obligations incurred in its performance under this Subcontract, or by its agents, suppliers, contractors or subcontractors, working under or through Subcontractor. Any and all payments to Subcontractor are conditioned upon prior delivery to Contractor of full waivers of liens, lien rights and payment bond rights for all labor and materials furnished by Subcontractor, its subcontractors, suppliers and any person or entity working through or under them for Work completed at the time of such payment. No payment hereunder shall be made until and unless said waivers are furnished with each payment request.

(b) Subcontractor agrees that all payments received by it shall be deemed to be, and constitute, a trust fund, and shalJ be first used and applied by Subcontractor in payment for all materials, labor and any and all other obligations incurred in connection with the Work, prior to their use and application by Subcontractor for its own or any other purpose.

(c) In addition, Subcontractor hereby grants to Contractor the following rights: (i) to request names, phone numbers, copies of agreements and account status reports as to any of Subcontractor's own suppliers, subcontractors, labor unions or workmen; (ii) to audit Subcontractor's records to verify the account status of any Subcontractor's own suppliers, subcontractors, labor unions or workmen; and (iii) to make direct payment of amounts properly payable to any of Subcontractor's own suppliers, subcontractors, labor unions, or workmen where Contractor determines that Subcontractor has failed to make required payments to such entities. Any such payments so made by Contractor shall be deemed a proper credit in like amount against amounts due from Contractor to Subcontractor. Payment by Contractor to any subcontractor, laborer or supplier of Subcontractor shall not relieve Subcontractor of any obligations to Contractor under this Suconlract. Contractor, in its sole discretion, may make payment by checks payable jointly to Subcontractor and any subcontractor, laborer or supplier of Subcontractor.

(d) With each invoice submitted, the Subcontractor shall furnish a Sworn Statement listing each of its subcontractors, suppliers, laborers and union funds relating to the Project showing the amounts due and unpaid to each, together with waivers of liens from all sub/subcontractors and suppliers.

11. Permits, Bonds and Taxes. Subcontractor, at its own expense and cost, shall apply for and obtain all necessary permits and inspections as required by law for the performance of the Work. Subcontractor is responsible for paying all required taxes, bonds and licenses relating to the Work.

12. Warranty. NEITHER THE FINAL NOR ANY PROGRESS PAYMENTS SHALL RELIEVE SUBCONTRACTOR OF RESPONSIBI LITY FOR FAU LTY MATERIALS OR WOR KMANSHI P. SUBCONTRACTOR HEREBY WARRANTS THAT THE WORK SHALL BE WITISOUT FAULT OR DEFECT FOR THE PERIOD SET FORTH IN THE PRIME CONTRACT OR FOR A PERIOD OF ONE (1) YEAR FROM FINAL COMPLETION OF THE PROJ ECT, WHICH EVER IS LONGER. SUBCONTRACTOR AGREES TO COMMENCE CORRECTIVE ACTION WITHIN FIVE (5) BUSINESS DAYS OF BEING NOTIFIED BY CONTRACTOR OF WORK WHICH IS INCOMPLETE OR DEFECTIVE. SUBCONTRACTOR AGREES TO PERFORM AND COMPLETE AT ITS COST ANY WARRANTY WORK WITH ALL DUE DILIGENCE. IF SUBCONTRACTOR FAILS TO PERFORM THE REQUIRED CORRECTIVE ACTION IN A TIMELY FASHION, CONTRACTOR MAY CAUSE THE WORK TO BE PERFORMED BY OTHERS AND SUBCONTRACTOR SHALL BE RESPONSIBLE FOR ALL COSTS OF SAME AND CONTRACTOR MAY DEDUCT SUCH COSTS FROM ANY PAYMENTS DUE SUBCONTRACTOR, WHICH REMEDY SHALL BE IN ADDITION TO AND NOT A LIMITATION OF ALL RIGHTS AND REMEDIES OF CONTRACTOR UNDER THE APPLICABLE SUBCONTRACT, THESE GENERAL TERMS AND CONDITIONS, OR UNDER LAW OR IN EQUITY.

13. Insurance and Indemnification.

Subcontractor shall, at its own expense, maintain at least the following minimum insurance coverages or such greater coverages or limits as referenced in the Prime Contract:

A. Provide for and maintain through an insurance company licensed in the state of Michigan WITH A BEST S RATING OF A-, VIII OR BETTER and acceptable to the Contractor, COMMERCIAL general liability, employer's liability and worker's compensation comprehensive automobile insurance AND UMBRELLA/EXCESS for the Subcontractor and its employees with limits in amounts and other coverages as set forth below and to furnish Certificates of Insurance of such insurance coverages to the Contractor. The Subcontractor shall not perform work on the site until an insurance certificate evidencing coverages, limits, and other requirements outlined below has been provided to the Contractor.

1. Provide Contractor with a Certificate of Insurance on an Accord Certificate Form 25-5, or a comparable form, which is satisfactory to Contractor. A 30-Day notice of cancellation is required. The words ' Endeavour to" and "but failure to mail such notice shall impose no obligations or liability of any kind upon the company, its agents or representative" shall be stricken or removed from the notice of cancellation.

2. The Insurance Certificates shall reflect the following types of coverages in amounts not less than that stated:

i. Worker s Compensation Insurance covering your statutory obligation in the stale(s) which the work for us is to be performed and Employer's Liability Insurance with limits of $1,000,000.00 Each Accident, $1,000,000.00 Disease — Policy Limit and Disease Each Employee $1,000,000.00.

ii. Automobile Liability Insurance with a combined single limit for bodily Injury and Property Damage Liability of $1,000,000.00 per accident covering your owned, non-owned, and hired automobiles.

iii. Commercial General Liability Insurance written on an Occurrence Policy Form which includes coverage for your operations, personal injury, CU (explosion, collapse and underground), Independent contractors, contractual and products/completed operations with the following limits of liability; PER JOB SITE AGGREGATE.

a.

General Aggregate	$2,000,000.00
Products/Comp.	2,000,000.00
Personal and Adv. Injury	1,000,000.00
Each Occurrence	1,000,000.00

b. Products/C ompleted Operations Liability must be maintained for not less than three (3) years after acceptance of your work.

iv. Excess or Umbrella Liability Insurance with occurrence/aggregate limit displayed below.

a. Type I, Subcontractors - Asphalt Paving, Curtain Walls AND Windows, Demolition Drywall, Electrical, Elevator, FSection, Excavation, Fencing, Fireplace, Fire Protection, Masonry, Mechanical, Plumbing including excavation, Pool, Roofing, Rough Carpentry, Concrete Flatwork, Sewer/\/Vater, Structural Steel, Underground Utilities, and similar.

$5,000,000.00 occurrence/aggregate excess/umbrella or

b. Type II, Subcontractors - Cabinets, Caulking, Finish Carpentry, EIFS, Flagpoles, Floor Covering Floor Finishes, Glass and Aluminum, Insulation, Kitchen Equipment, Landscaping, Metal or Vinyl Siding, Millwork, Miscellaneous Specialties, Overhead Doors, Painting, Plastering, Plumbing without excavation, Signs, Telephone/Security/Audio Systems, Tile, Toilet Partitions, Wallpaper, Waterproofing, and similar.

$2,000,000.00 occurrence/aggregate exces s/umbrella.

v. PROFESSIONAL LIABILITY INSURANCE WITH LIMITS OF $1,000,000.00 PER CLAIM AND AGGREGATE WHEN PROVIDING PROFESSIONAL DESIGN SERVICES ASSOC IATED WITH THIS AGREEMENT.

3. FRAN K REWOLD & SONS INC., AND THE OWNER SHALL BE NAMED AS PRIMARY ADDITIONAL INSUREDS ON THE GENERAL LIABILITY POLICY USING FORM CG -2010 11-85 OR AN ENDORSEMENT(S) PROVIDING EQUIVALENT "ARISING OUT OF" COVERAGE, AUTOMOBILE AND UMBRELLA POLICIES REQUIRED HERE UNDER. SUBC ONTRACTOR AGREES THAT THE ADDITIONAL INSURED ENDORSEMENTS SHALL COVER COMPLETED OPERATIONS.

4. The General Liability coverage for the additional insureds shall be "work performed" and "shall be primary and noncontribulory for ongoing completed operations with other insurance maintained by the additional insured being excess and noncontributing to the Subcontractor's insurance." Language to this effect shall be provided on the Certificate of Insurance. Any deviation

in coverage pi ovided by the Standard 1986 ISO Simplified General Liability Policy must be clearly noted and shall be finding hereunder until accepted in writing by the Contractor.

S. General LIABILITY and auto liability limits may be attained by individual policies or by a combination of individual umbrella, and/or excess liability policies.

6. THERE SHALL BE NO RESIDENTIAL EXCLUSION IN ANY POLICY THAT IS PROVIDED TO SATISFY THESE REQUIREMENTS IF THE PROJECT IS OF A RESIDENTIAL NATURE

7. Subcontractor shall maintain product/completed operations coverage through the longer of three (3) years or the longest period of the last applicable statute of limitation or repose for construction defects and products liability claims in the state where the work is performed.

B. Waiver of Subrogation SUBCONTRACTOR SHALL WAIVE AND REQUIRE ITS INSURERS PROVIDING COVERAGE BY THESE REQUIREMENTS TO WAIVE SUBROGATION RIGHTS AGAINST THE CONTRACTOR, OWNER AND ALL OTHER ADDITIONAL INSURED FOR LOSSES AND DAMAGES INCURRED AND/OR PAID UNDER THE INSURANCE PO LICIES REQUIREE BY THESE REQUIREMENTS OR OTHER INSURANCE APPLICABLE TO SUBCONTACTOR OR ITS SUBCONTRACTORS SUPPLIERS ETC. AND WILL INCLUDE THIS SAME REQUIREMENT IN CONTRACTS WITH THESE PARTIES. IF THE POL fCIES OF INSURANCE REFERRED TO IN THIS PARAG RAPH REQUIRE AN ENDORSEMENT TO PROVIDE FOR CONTINUED COVERAG E WHERE THERE IS A WAIVER OF SUBROGATION THE OWNERS OF SUCH POLICIES WILL CAUSE THEM TO BE SO ENDORSED

Contractor and Subcontractor waive all rights they may have against each other, the Owner, the Architect/E ngineer and other consultants, and other subcontractors for damages covered by builder's risk or other property insurance, except rights they may have to the proceeds of such insurance. Subcontractor shall require its vendors, suppliers, and sub-subcontractors, by written agreemen I, to waive all rights they may have against the same parties for damages covered by builder's risk or other property insurance except the rights to proceeds of such insurance.

C. Subcontractor assumes and undertakes the entire risk of any and all personal injuries and/or property damage arising out of or in any connected with the Work. To the fullest extent permitted by law, Subcontractor shall indemnify, hold harmles s and defend Contraclor and the Owner of the Project, their respective officers, members, directors, employees, agents and representatives from and against any and all damages, expenses, claims and suits of whateVer kind or nature (including attorney fees) arising out of or in any way connected with the Work, unless the injuries or damages are caused by the sole negligence of the party to be indemnified. The provisions of this section shall survive termination of this subcontract.

14. Time is of the Essence. Time is of the essence of Subcontractor's performance of the Work. Subcontractor agrees to complete the Work by the Completion Date, and to do the Work at greater or lesser speeds and at such times and in such quantities as in Contractor's judgment are required for the best possible progress of the construction of the Project or as shall be specifically requested by Contractor. Subcontractor also shall so conduct the Work as to facilitate and so as not to interfere with or delay the work of Contractor any other subcontractor or contractor employed on the job.

15. Alterations/C hanqe Orders/Claims.

(a) No additions, deductions, changes or alterations shall be made to the Work and no claim for changed or extra work or materials in any event (Additional Work) shall be recognized except on written order signed by the Project Manager or an officer of Contractor. No other employee of the Contractor will be authorized to alter or issue change orders to this Contract. The amount to be paid by, or credited to, Contractor as a result of any such additions, deductions, changes or alterations shall be stated in the order.

(b) All claims by Subcontractor for (i) loss or damage against Contractor; and/or (ii) an extension of the completion date, however arising, shall be made to Contractor within fourteen (14) days from (i) the date Subcontractor first sustains any such loss or damage; or (ii) the date on which the event giving rise to an alleged delay or need for an extension of the Completion Date first occurs. If Subcontractor fails to make such claim within that time by a written statement setting forth all items of loss, damage and/or delay, as applicable , the amount and details thereof, or if Subcontractor fails to render each day thereafter a written itemized statemenI of the details and amounts of any continuing claim for each loss, damage or delay duly verified by Subcontractor, its rights to damages and reimbursement therefore and any rights to any extension of the Completion Date shall be deemed to have been waived and forfeited and Subcontractor shall not be entitled to any payment, or any extension of the Completion Date, on account of any such claimed loss, damage or delay, notwithstanding anything to the contrary herein. Subcontractor shall only be entitled to payment for any such claims upon Contractor's actual receipt of payment from the Owner for Subcontractor's claim(s).

16. Subcontractor's Default. If Subcontractor (i) fails to perform the Work or any part thereof with promptness and diligence; (ii) delays the progress of the Project; (iii) becomes bankrupt or insolvent; (iv) fails to sufficiently supply properly skilled workmen or materials of proper quality; (v) fails to pay its subcontractors, suppliers or laborers the amounts properly due said persons or entities; (vi) fails to pay workers' compensation or other employee benefits; (vii) fails to comply with the safety provisions of the Subcontract or Project, its own safety plan or any safety plan of Contractor, or with any safety ordef, regulation or requirement of any governing authority having jurisdiction over this Project; (viii) shall file a voluntary petition in bankruptcy or be adjudicated insolvent, obtain an order for relief under Section 301 of the Bankruptcy Code, file any petition or fail to contest any petition tiled seeking any reorganization or similar relief under any laws relating to bankruptcy, insolvency or other relief or debtors, or seek or consent to or acquiesce in the appointment of any trustees, receiver or liquidator of any of its assets or property, make an assignment for the benefit of creditors; or make an admission in writing of its inability to pay its debts as they become due; (ix) defaults on any other contract with Contractor, or (x) fails in any other respect to comply with the Contract Documents, then, in addition to any other remedies available at law or in equity and/or under this Subcontract:

(a) Contractor may require that Subcontractor utilize, at Subcontractor's own expense, additional labor, overtime labor (including Saturday and Sunday work) and additional shifts as necessary to overcome the consequences of any delay attributable to Subcontractor's default; and/or

(b) After forty-e ight (48) hours' written (or oral, confirmed in writing) notice to Subcontract or, Contractor may i emedy Sr bcoiJtractcr's def ault by whatever means Con tractor may deem necessary or appropriate, ineluding, without limitation , providing such labor and material s as may be necessary to properly complete the Work, where upon Contractor may deduct the cost and expense thereof from any money then due or thereafter to become due Subcontractor under the applicable Subcontract; and/or

(c) After giving Subcontractor forty-eig ht (48) hours' written (or oral, confirmed in writing) notice terminate the applicable Subcontract, without there by waiving or releasing any rights or remedies against Subcontractor or its sureties; and/or

(d) Contractor may recover from Subcontractor all costs incurred by Contractor to complete the Work plus a ten percent (10%) markup for overhead and profit, and further recover from Subcontractor all losses, dam ages, penalties and fines, whether actual or liquidate d, direct or consequential, and all reasonable attorneys' fees suffered or incurred by Contractor as a result of said default(s); and/or

(e) Contractor may bar Subcontractor from the job site and to take possession for the purpose of completing the Work included under the Contract Documents, all materials, tools, scaffolding, apparatus, machinery and equipment thereon , and to employ or contract with any other person or persons to finish the Work.

(f) Subcontractor shall not be entitled to receive any further payment under this Subcontract until the Work shall be wholly finished, at which time if the unpaid balance of the amounI to be paid on this Subcontract shall exceed the expense incurred by Contractor in finishing the Work, then such unpaid balance, after deducting any loss, damage or expense, by reason of Subcontractor's failure to adequately perform, including damages for delays, and expense for attorney's fees, shall be paid to Subcontractor by Contractor. In case the costs, expenses, losses and damage of such work exceeds the unpaid balance, Subcontractor shall immediately pay the amount of such excess to Contractor.

(g) If, as a matter of law, the Contractor does not have the righ(, due to a bankruptcy proceeding involving the Subcontractor, to exercise the remedies provided for in this Subcontract then if Subcontract or, as debtor or its trustee, wishes to assume the applicable Subcontract, in addition to curing or adequately assuring the cure of all the Subconlractor's defaults existing under this Subcontract on the date of filing of the proceeding s and thereafter, Subcontractor, as debtor, or its trustee, must at so furnis h adequate assurances of future performance under this Subcontract.

(h) In the event that Contractor is later determined to have improperly terminated this Subcontract under this Article 16, such termination shall be deemed to have occurred under the following Article 17.

17. Contractor's Right to Terminate Contract. Anything to the contrary herein notwithstanding, Contractor, in its sole discretion, may terminate this Subcontract at any time, without cause, by giving at least forty-eight (48) hours' prior written notice of such termination to Subcontractor. Upon any termination of a Subcontract, and subject to all of the terms and provisions herein contained, Subcontractor shall be entitled to payment for all accepted Work furnished and installed by it pursuant to this Subcontract on a pro-rata basis. No profits shall be allowed on the uncompleted portion of the Work. Contractor shall only be liable for labor and materials properly furnished up to the date of termination and no profits shall be allowed on the uncompleted portion of the Work. Contractor shall only be liable for labor and materials properly furnished up to the date of termination and/or materials ordered for Project, but only to the extent Subcontractor is liable for the cost thereof and has no ability to return uninstalled material. In the event of the termination of the contract betwe en Contractor and the Owner of the Project, this Subcontract shall also be terminated. II is also understood and agreed that the Owner may have the right to approve or disapprove the employment of Subcontractor if the Owner does not approve Subcontractor, this Subcontract shall become null and void.

18. No Liability for Delays. Contractor shall not be liable to Subcontractor for any extra compensation or for any damages or additional costs that Subcontractor suffers or incurs from delays, interruptions and/or accelerations in performing the Work or furnishing materials, or other causes attributable to Contractor, Contractor's other Subcontractors or Owner. Subcontractor's sole remedy for delay, accelerations and/or interruptions shall be an extension of the Completion Date.

19. Waiver and Remedies. The waiver by Contractor of any default or of any breach of the terms of this Subcontract shall not be deemed a waiver of any subsequent breach.

20. Assignment. Subcontractor shall not assign all or any part of this Subcontract, nor any Work, nor any payments due or to become due hereunder, without first obtaining Contractor's written consent. In the event that Owner requests assignment of this Subcontract, Subcontractor consents to such assignment.

21. Entire Agreement; Amendments; Governing Law. Contractor and Subcontractor acknowledge that this Subcontract constitutes the whole agreement between them concerning the subject matter hereof. This Subcontract may not be modified or amended unless the modification or amendment is made in writing by duly authorized representatives of the Subcontractor and either (i) the representative who executed this Subcontract on behalf of Contractor or (ii) an Officer of Contractor. This Subcontract shall be governed by and construed in accordance with the laws of the State of Michigan.

22. Fees of Collection. If Contractor shall incur any cost or expense, including attorney fees, in preparing or prosecuting any claim against the Ownef or in securing paymenI of the contract balances for work done by Subcontractor, Contractor shall be entitled to deduct Subcontractor's pro rata share of such costs and expenses from the amount due to Subcontractor.

23. Mediation/Arbitration. At Contractor's sole discretion, any dispute between Contractor and Subcontractor in any way relating to the Work or this Subcontract, may be submitted to mediation and/or arbitration pursuant to the Construction Industry Rules of the American Arbitration Association then in effect. Such Mediation/Arbitration shall take place in Oakland County, Michigan. Any decision of any Arbitrator rendered pursuant to an arbitration initiated or consented to by the Contractor may be enforced by a court of competent jurisdiction.

24. Surety Bonds. The Contractor shall have the right to require the Subcontractor to furnish payment and/or performance bonds covering the Work in such form and amounts as the Contractor requires and with sureties that are reasonably acceptable to the Contractor. If bonds are required in connection with Subcontractor's initial performance of the Work, all surety bond premiums shall be the obligation of the Subcontractor. If bonds are required by Contractor subsequent to the Subcontractor beginning its work, the actual costs of such premiums shall be reimbursed to Subcontractor by Contractor.

Subcontractor Agreement (Revised 2-24-2020)

CERTIFICATE OF LIABILITY INSURANCE

DATE (MM/DD/YYYY): 10/17/2023

THIS CERTIFICATE IS ISSUED AS A MATTER OF INFORMATION ONLY AND CONFERS NO RIGHTS UPON THE CERTIFICATE HOLDER. THIS CERTIFICATE DOES NOT AFFIRMATIVELY OR NEGATIVELY AMEND, EXTEND OR ALTER THE COVERAGE AFFORDED BY THE POLICIES BELOW. THIS CERTIFICATE OF INSURANCE DOES NOT CONSTITUTE A CONTRACT BETWEEN THE ISSUING INSURER(S), AUTHORIZED REPRESENTATIVE OR PRODUCER, AND THE CERTIFICATE HOLDER.

IMPORTANT: If the certificate holder is an ADDITIONAL INSURED, the policy(ies) must be endorsed. If SUBROGATION IS WAIVED, subject to the terms and conditions of the policy, certain policies may require an endorsement. A statement on this certificate does not confer rights to the certificate holder in lieu of such endorsement(s).

PRODUCER	CONTACT NAME: Agent Contact Name	
Insurance Agent's Name Address City State Zip Code	PHONE (A/C, No, Ext): Agent Phone #	FAX (A/C, No): Agent fax #
	E-MAIL ADDRESS: Agent email address	
	INSURER(S) AFFORDING COVERAGE	NAIC #
	INSURER A : ABC Insurance Company	NAIC #
INSURED	INSURER B : XYZ Insurance Company	NAIC #
Your Company Name Address City State Zip Code	INSURER C :	
	INSURER D :	
	INSURER E :	
	INSURER F :	

COVERAGES **CERTIFICATE NUMBER:** Sample Subcontractor COI **REVISION NUMBER:**

THIS IS TO CERTIFY THAT THE POLICIES OF INSURANCE LISTED BELOW HAVE BEEN ISSUED TO THE INSURED NAMED ABOVE FOR THE POLICY PERIOD INDICATED. NOTWITHSTANDING ANY REQUIREMENT, TERM OR CONDITION OF ANY CONTRACT OR OTHER DOCUMENT WITH RESPECT TO WHICH THIS CERTIFICATE MAY BE ISSUED OR MAY PERTAIN, THE INSURANCE AFFORDED BY THE POLICIES DESCRIBED HEREIN IS SUBJECT TO ALL THE TERMS, EXCLUSIONS AND CONDITIONS OF SUCH POLICIES. LIMITS SHOWN MAY HAVE BEEN REDUCED BY PAID CLAIMS.

INSR LTR	TYPE OF INSURANCE	ADDL INSD	SUBR WVD	POLICY NUMBER	POLICY EFF (MM/DD/YYYY)	POLICY EXP (MM/DD/YYYY)	LIMITS	
A	X COMMERCIAL GENERAL LIABILITY CLAIMS-MADE / X OCCUR X Contractual Liability GEN'L AGGREGATE LIMIT APPLIES PER: POLICY / X PRO-JECT / LOC OTHER:	X	Y	Policy #	mm/dd/yyyy	mm/dd/yyyy	EACH OCCURRENCE	$ 1,000,000
							DAMAGE TO RENTED PREMISES (Ea occurrence)	$ 1,000,000
							MED EXP (Any one person)	$ 15,000
							PERSONAL & ADV INJURY	$ 1,000,000
							GENERAL AGGREGATE	$ 2,000,000
							PRODUCTS - COMP/OP AGG	$ 2,000,000
								$
A	AUTOMOBILE LIABILITY X ANY AUTO ALL OWNED AUTOS / SCHEDULED AUTOS X HIRED AUTOS / X NON-OWNED AUTOS	X	Y	Policy #	mm/dd/yyyy	mm/dd/yyyy	COMBINED SINGLE LIMIT (Ea accident)	$ 1,000,000
							BODILY INJURY (Per person)	$
							BODILY INJURY (Per accident)	$
							PROPERTY DAMAGE (Per accident)	$
								$
B	X UMBRELLA LIAB / X OCCUR EXCESS LIAB / CLAIMS-MADE DED / RETENTION $ 0			Policy #	mm/dd/yyyy	mm/dd/yyyy	EACH OCCURRENCE	$ 5,000,000
							AGGREGATE	$ 5,000,000
								$
A	WORKERS COMPENSATION AND EMPLOYERS' LIABILITY ANY PROPRIETOR/PARTNER/EXECUTIVE OFFICER/MEMBER EXCLUDED? (Mandatory in NH) Y/N: N If yes, describe under DESCRIPTION OF OPERATIONS below	N / A	Y	Policy #	mm/dd/yyyy	mm/dd/yyyy	X PER STATUTE / OTH-ER	
							E.L. EACH ACCIDENT	$ 1,000,000
							E.L. DISEASE - EA EMPLOYEE	$ 1,000,000
							E.L. DISEASE - POLICY LIMIT	$ 1,000,000

DESCRIPTION OF OPERATIONS / LOCATIONS / VEHICLES (ACORD 101, Additional Remarks Schedule, may be attached if more space is required)

RE: (Include Job Name and Job Number.) Where required by written contract, Frank Rewold & Sons, Inc. and (Owners Name) are add'l insured for General Liability per form CG 2010 1185 and CG 2037 1185 or equivalent as respects ongoing & completed operations on a primary & non-contributory basis and add'l insured with respects to Auto Liability. GL, Auto & Workers Comp policies include waiver of subrogation on behalf of the add'l insured as required by written contract and where allowed by law. Umbrella/Excess liability coverage follows form over GL, Auto & Employers Liability. Insurer will endeavor to mail 30 days written notice of cancellation to the certificate holder for the additional insured, however,

CERTIFICATE HOLDER

Frank Rewold & Sons, Inc.
303 E. Third Street
Suite 300
Rochester, MI 48307

CANCELLATION

SHOULD ANY OF THE ABOVE DESCRIBED POLICIES BE CANCELLED BEFORE THE EXPIRATION DATE THEREOF, NOTICE WILL BE DELIVERED IN ACCORDANCE WITH THE POLICY PROVISIONS.

AUTHORIZED REPRESENTATIVE

© 1988-2014 ACORD CORPORATION. All rights reserved.

COMMENTS/REMARKS

failure to do so will impose no liability of any kind upon the insurer or its agents or representatives.

COPYRIGHT 2000, AMS SERVICES INC.

Name: _____

Please Print Name

Pledge to respect students, staff

and support safety during construction

HOSPITALITY PROGRAM:

Providing a safe and secure environment for our students and staff is the focus of everything we do. Our Hospitality Program is centered on the values of safety, service, friendliness, helpfulness, courtesy, communications, response, privacy, dignity, respect, listening and professionalism. The purpose of this pledge is to inform you, and to obtain your acknowledgment and agreement, that everyone working in and around Rochester Community Schools, has a stake in providing a quality education environment and to insure student and staff safety. By supporting and following these values, you will have a direct and positive impact on our students and staff.

IDENTIFICATION BADGES:

Contractors who will be working on a Rochester Community School campus, for more than one day, shall wear a Rochester Community School identification badge everywhere they go. The badges will be obtained through the RCS Facility Management Department, located at 1402 Hamlin Road, Rochester Hills.

OPEN FLAMES:

Open flames of any kind require a burn permit obtained through RCS Facility Management or the General Contractor on your job prior to using any open flames. This also applies to cutting and welding forms. A recent, inspected and approved "Class C" fire extinguisher shall be kept at the work site at all times. *Refer to the* **Rewold** *Contractual Safety Rules and the Site Specific Safety Plan for Hot Work Permit requirements*

PARKING:

Parking space at Rochester Community School campus is limited to designated parking areas for contractor employees. *Please refer to* **Rewold** *Method of Procedures Manual and site logistics' Plan for instruction*

TELEPHONES:

Rochester Community School telephones are off limits without prior approval. Please use job site designated phones or cell phones.

OPEN CEILINGS:

Ceiling removal for access to mechanical and electrical work or investigation is often necessary. When the work is complete, the ceiling must be put back immediately. Ceilings in occupied areas that need to be left open for more than 1 day must have protection or approval from RCS Facilities Management.

SMOKE DETECTORS:

Rochester Community School is protected by a network of smoke detectors. The detectors can be set off by dust, fumes, smoke or heat. Smoke alarms may be temporarily disconnected after contacting RCS Facilities Management and receiving approval.

HEALTH & SAFETY:
All construction personnel are expected to have been trained and follow health and safety practices as required by law. Rochester Community Schools will be providing periodic review of all job sites. It is expected that they will receive full cooperation. Contractors will contact the District Security Phone in the event of an emergency at (248) 789-2188.

CAFETERIA:
Access to the cafeteria is allowable only for the purchase of food and beverages. Consumption of food and beverages in the cafeteria is not allowed, as the cafeteria is reserved for student use only.

KEYS:
Keys or access to mechanical spaces and other locked areas are available from Facility Management only. The recipient's valid driver's license shall be copied by Facility Management department. Keys are required to be returned upon completion of use. Contact Facility Management at (248) 726-4600. *Please Coordinate all access with* **Rewold** *Site Superintendent*

SMOKING:
Rochester Community Schools are Smoke Free Campuses. Smoking is prohibited within any Rochester Community School building, campus or construction site.

UTILITY SHUTDOWNS:
No mechanical or electrical systems may be shut down or turned off for any reason without approval from RCS Facilities Management or without RCS Facilities Management's assistance. Plan your work so that three (3) calendar days' notice can be given for all shutdowns.

HOUSEKEEPING:
The construction area shall be kept in a neat condition at all times. Combustible boxes, debris and scrap materials shall be disposed of daily. Provisions shall be made to avoid the tracking of dust outside of the construction area. No refuse is to be left at any entry. Contractors will not use Rochester Community School equipment to clean up their projects.

OCCUPIED AREAS:
It is expected that contractor employees working in occupied areas, including corridors, be sensitive to students, staff and the public and to take measures to insure their safety and to protect the surrounding environment. Loud noises, yelling, foul language, dirt and debris, working without barricades, unattended ladders, toolboxes and material are not permitted.

TOILETS:
Contractor personnel shall only utilize staff toilets as directed by your Supervisor or Facility Management. It is expected that use of toilets by contractor personnel will be kept clean at all times and not result in any additional cleaning requirements. *Direction will be given by the* **Rewold** *Site Superintendent during contractor Orientation.*

NOISE:

Every effort shall be made to control noise from construction activities. A minimum of 24 hour notification to the Project Manager/Project Engineer, or RCS Facility Management and the adjacent departments shall be provided prior to noise generating activities. Pay particular attention to "Hilti" type guns, hammer drills, sledge hammers and saw cutting. Radios and/or personal sound systems are not permitted on the job within the schools. If uncertain, see your Supervisor.

DRUGS & ALCOHOL:

Rochester Community School is committed to maintaining a safe, productive work environment. Any contractor who is under the influence of drugs or alcohol poses a serious threat to his or her own safety and the safety of others. Also, a person cannot do his or her job properly while working under the influence of drugs or alcohol. Any contractor taking drugs or other medication, whether or not prescribed by a physician, who is known or publicized as possibly impairing judgement, coordination or other senses important to the safe, productive performance of work must notify his/her supervisor prior to starting work. The General Contractor and Construction Forman will decide whether the contractor may continue to work and/or will impose any necessary work restrictions. Contractors are prohibited from being at work with any detectable amount of alcohol or illegal drug in their system. Any contractor violating this will be subject to removal from the construction job site. Rochester Community School reserves the right to conduct drug/alcohol testing on any contractor.

EMERGENCY PREPAREDNESS:

- To report a fire or a chemical spill, call the District Security phone at (248) 789-2188.
- If a fire alarm is announced in your work area, pull all equipment and work carts out of the hall to allow emergency exit.
- Review and understand any specific work site policies and procedures.

CONCURRENCE:

I have read, understand and pledge, to support providing a safe workplace for students and staff as outlined above.

_____	_____	_____
Signature	Company	Date