SSS: no comments

PROJECT MANUAL FOR

SACRAMENTO CITY UNIFIED SCHOOL DISTRICT

LUTHER BURBANK HIGH SCHOOL
FENCING AND SITE WALL

CONSTRUCTION DOCUMENTS

DSA NO. 02-123456
LIONAKIS NO. 024251
June 18, 2025

LIONAKIS

N

PROJECT MANUAL

FOR

SACRAMENTO CITY UNIFIED SCHOOL DISTRICT
LUTHER BURBANK HS FENCING

DSA NO. 02-123456
LIONAKIS JOB NO. 024251

OWNER:
SACRAMENTO CITY UNIFIED SCHOOL DISTRICT
5735 47th Avenue
Sacramento, CA 95824
916-395-3970

ARCHITECT:
LIONAKIS
2025 19th Street
Sacramento, CA 95818
916-558-1900

LICENSED ARCHITECT
JENNIFER MARIE JOHNSON QUIGLEY
C34138
REN. 11-30-25
STATE OF CALIFORNIA

Jennifer Quigley License # C34138

STRUCTURAL ENGINEER:
LIONAKIS
2025 19th Street
Sacramento, CA 95818
916-558-1900

REGISTERED PROFESSIONAL ENGINEER
LUCAS A JOLLY
No. S5153
STRUCTURAL
STATE OF CALIFORNIA
06/11/2025

Lucas Jolly License # S5153

CIVIL ENGINEER:
WARREN CONSULTING ENGINEERS, INC.
1117 Windfield Way, Suite 110
El Dorado Hills, CA 95762
916-985-1870

Anthony J. Tassano License # C74696

IDENTIFICATION STAMP
DIV. OF THE STATE ARCHITECT
APP: 02-123456 INC:
REVIEWED FOR
SS ☑ FLS ☑ ACS ☑
DATE: 08/08/2025

Agency Approval:

PROJECT MANUAL

FOR

SACRAMENTO CITY UNIFIED SCHOOL DISTRICT
LUTHER BURBANK HS FENCING

TABLE OF CONTENTS

DIVISION NO.	SECTION TITLE	PAGES INCLUSIVE
DIVISION 00	PROCUREMENT AND CONTRACTING REQUIREMENTS	
By Owner		
	SPECIFICATIONS	
DIVISION 01	GENERAL REQUIREMENTS	
Section 01 31 14	Additional Requirements for DSA Reviewed Projects	1 – 4
Section 01 33 00	Submittal Procedures	1 – 8
	Delivery of Electronic Files Agreement Form	1 – 2
	Delivery of BIM Model Agreement Form	1 only
Section 01 57 13	Erosion Control	1 – 2
Section 01 60 00	Product Requirements	1 – 5
	Substitution Request Form	1 – 3
Section 01 73 29	Cutting and Patching	1 – 4
DIVISION 02	EXISTING CONDITIONS	
Section 02 41 00	Site Demolition	1 – 6
DIVISION 03	CONCRETE	
Section 03 30 53	Miscellaneous Cast-in-Place Concrete	1 – 17
DIVISION 04	MASONRY	
Section 04 22 00	Concrete Unit Masonry	1 – 12
DIVISIONS 05 – 06	NOT USED	
DIVISON 07	THERMAL AND MOISTURE PROTECTION	
Section 07 19 19	Silicone Water Repellents	1 – 6
Section 07 90 00	Joint Sealers	1 – 4
DIVISION 08	OPENINGS	
Section 08 71 00	Gate Hardware	1 – 29
DIVISION 09	FINISHES	
Section 09 91 00	Painting	1 – 6
DIVISIONS 10 – 26	NOT USED	

DIVISION 27 COMMUNICATIONS
Section 27 00 00 Communications Basic Requirements ..... 1 – 8
Section 27 05 00 Common Work Results for Communications ..... 1 – 11
Section 27 10 00 Structured Cabling ..... 1 – 13

DIVISION 28 ELECTRONIC SAFETY AND SECURITY
Section 28 10 00 Access Control System ..... 1 – 9

DIVISION 31 EARTHWORK
Section 31 00 00 Earthwork ..... 1 – 10
Section 31 13 16 Tree Protection ..... 1 – 4
Section 31 23 33 Trenching and Backfilling ..... 1 – 6

DIVISION 32 EXTERIOR IMPROVEMENTS
Section 32 12 00 Asphalt Concrete Paving ..... 1 – 8
Section 32 16 00 Site Concrete ..... 1 – 13
Section 32 31 00 Decorative Metal Anti-Climb Fencing and Gates ..... 1 – 5
Section 32 31 13 Chain Link Fences ..... 1 – 4
Section 32 31 19 Decorative Metal Fences ..... 1 – 5
Section 32 31 19.16 Swinging Decorative Metal Gates ..... 1 – 6

DIVISIONS 33 – 49 NOT USED

END OF TABLE OF CONTENTS

SECTION 01 31 14

ADDITIONAL REQUIREMENTS FOR DSA REVIEWED PROJECTS

PART 1 - GENERAL

1.01 SECTION INCLUDES

A. Additional requirements for projects reviewed by the Division of the State Architect (DSA).

1.02 REFERENCES

A. The publications listed below form a part of this Section to the extent referenced. The publications are referred to in the text by the basic designation only.

B. Standards, manuals, and codes refer to the latest edition of such standards, manuals, and codes in effect as of the date of issue of this Project Manual, unless indicated otherwise in CBC Chapter 35 and CFC Chapter 80.

C. California Code of Regulations (CCR).

1. Title 8, Division 1, Chapter 3.2 – California Occupational Safety and Health Regulations (Cal/OSHA).
2. Title 8, Division 1, Chapter 4, Sub-Chapter 4 – Construction Safety Orders.
3. Title 8, Division 1, Chapter 4, Sub-Chapter 7 – General Industry Safety Orders.
4. Title 19, Division 1 –State Fire Marshal (SFM).
5. California Code of Regulations, Title 24, Part 1 - California Administrative Code.

a. All Code Section numbers in this Section refer to Chapter 4 “Administrative Regulations for the Division of the State Architect – Structural Safety”, Group 1 “Safety of Construction of Public Schools”.

D. Division of the State Architect Interpretation of Regulations Manual (DSA IR)

1. DSA IR A-6 – Construction Change Document Submittal and Approval Process.
2. DSA IR A-7 – Project Inspector Certification and Approval.
3. DSA IR A-8 – Project Inspector and Assistant Inspector Duties and Performance.
4. DSA IR A-12 – Assistant Inspector Approval.

E. Division of the State Architect Website: www.dsa.dgs.ca.gov.

1.03 GENERAL REQUIREMENTS

A. Contractor’s Duties:

1. Comply with California Administrative Code, Chapter 4, Article 6, Paragraph 4-343, “Duties of the Contractor” in addition to the duties described in the Contract Documents.
2. Comply with CCR Title 8, Division 1, Chapter 3.2, California Occupational Safety and Health Regulations (Cal/OSHA).
3. Comply with CCR Title 8, Division 1, Chapter 4, Sub-Chapter 4, Construction Safety Orders.
4. Comply with requirements of CCR Title 19, Division 1, State Fire Marshal (SFM).

B. Architect's and Architect's Consultants' Duties: Comply with requirements of California Administrative Code, Chapter 4, Article 6, Paragraph 4-341, "Duties of the Architect, Structural Engineer or Professional Engineer" and Paragraph 4-344, "Duties of Mechanical and Electrical Engineers", in addition to the duties described in the Contract Documents.

C. Arbitration: DSA is not subject to arbitration proceedings.

D. Should any existing conditions such as deterioration or non-complying construction be discovered which is not covered by the DSA approved documents wherein the finished work will not comply with Title 24, California Code of Regulations (CCR), a Construction Change Document (CCD), or a separate set of Drawings and Specifications, detailing and specifying the required repair work shall be submitted to and approved by DSA before proceeding with the repair work.

1.04 REGULATORY REQUIREMENTS

A. Perform all work in accordance with applicable laws, codes, ordinances, rules, and regulations including, without limitation, 2022 California Building Code (CBC) Parts 1 through 6, Part 9, Part 11, and Part 12 in accordance with Title 24, Part 1, 4-305. Maintain a copy of these documents at the project site at all times.

B. Codes adopted by the City, County, State, and Federal agencies govern minimum project requirements. Comply with the latest edition of applicable regulatory requirements and standards unless otherwise indicated or specified.

C. Work as described in Drawings and Specifications shall not be construed as to permit work not in accordance with applicable laws, codes, ordinances, rules, and regulations.

1.05 INSPECTION AND SUPERVISION

A. Supervision by DSA shall be in accordance with California Administrative Code, Chapter 4, Article 5, Paragraph 4-334.

B. Owner shall select and pay for the services of a Project Inspector, certified and approved by the Architect, the Structural Engineer (when applicable), and DSA in accordance with Title 24, Part 1, 4-333(b).

1. When required, Owner will select and pay for the services of additional full-time Assistant Project Inspector(s) certified and approved by DSA in accordance with DSA IR A-12.

C. Project Inspector shall have and maintain on the job at all times, the edition of CCR Title 24, Part 1 through Part 6 referred to in the Drawings and Project Manual per Title 24, Part 1, 4-342(b)3.

D. Project Inspector shall inspect construction in accordance with California Administrative Code, Chapter 4, Article 5, Paragraph 4-333(b), "Inspection by a Project Inspector", and Article 6, Paragraph 4-342, "Duties of the Project Inspector", and DSA IR A-8.

1. Project Inspector performance rating by DSA shall be in accordance with DSA IR A-8, Section 3.1, "Project Inspector Performance Review".

E. Reports: Project Inspector shall submit the following:

1. Semi-Monthly Reports: Comply with California Administrative Code, Chapter 4, Article 5, Paragraph 4-337.
2. Verified Reports: Comply with California Administrative Code, Chapter 4, Article 5, Paragraph 4-336.

F. Special Inspection Requirements:

1. Comply with California Administrative Code, Chapter 4, Article 5, Paragraph 4-333(c), “Special Inspection”.
2. Special inspection costs to be paid by Owner.
3. Conduct special inspection in accordance with DSA-103, Statement of Structural Tests and Inspections.

1.06 TESTING AGENCY REQUIREMENTS

A. Comply with California Administrative Code, Chapter 4, Article 5, Paragraph 4-335, “Structural Tests and Special Inspections”.

B. Owner will select and pay for the services of a Testing Lab, certified and approved by the Architect, the Structural Engineer (when applicable), and DSA in accordance with Title 24, Part 1, 4-333(b).

C. Sampling and testing shall be performed by properly qualified persons in accordance with applicable American Society for Testing and Materials (ASTM) standards.

D. Conduct tests in accordance with DSA-103, Statement of Structural Tests and Inspections.

E. Submit one copy of test reports to DSA.

1.07 SUBSTITUTIONS AND REQUESTS FOR INFORMATION

A. Substitutions and Requests for Information (RFIs) that affect structural safety, fire and life safety, access compliance, or energy (as applicable) are Construction Change Documents and shall be submitted to DSA for review and approval prior to fabrication and installation on the project.

1.08 ADDENDA AND CONSTRUCTION CHANGES

A. Comply with California Administrative Code, Chapter 4, Article 5, Paragraph 4-338, “Addenda and Construction Changes”.

1. Addenda and Construction Changes, including supplementary drawings when applicable, shall be signed and stamped by the Architect and approved by DSA in accordance with Title 24, Part 1, 4-338(b).

B. Comply with DSA IR A-6.

C. Obtain DSA approval for changes to DSA approved Drawings and Specifications which affect Code-regulated construction and inspection/testing functions prior to start of that Work. Code-regulated construction refers to Work that is regulated by Code provisions applicable to public school construction, including those adopted by Division of the State Architect-Structural Safety Section (DSA/SS), Division of the State Architect-Access Compliance Section (DSA/AC), and Division of the State Architect-Fire and Life Safety Section (DSA/FLS).

   1. All changes, substitutions, and Requests for Information (RFIs) that affect Structural Safety, Fire and Life Safety, Access Compliance, or Energy, as applicable, shall be submitted to DSA for review and approval as a Construction Change Document (CCD) prior to fabrication and installation of the Work in accordance with DSA IR A-6 and Title 24, Part 1, 4-338(c). Substitutions shall be for any material, system, or product that would otherwise be regulated by DSA.

D. Changes can be approved by DSA through the CCD Category A or the CCD Category B review process, as applicable. Comply with DSA IR A-6, Article 3, Section 3.1, “CCD Category A” and DSA IR A-6, Article 3, Section 3.2, “CCD Category B”.

   1. CCD Category A is defined as changes to or affecting the Structural, Access, or Fire-Life safety portions of the Project.
   2. CCD Category B is defined as changes not affecting the Structural, Access, or Fire-Life safety portions of the Project.
   3. Construction Change Documents (Section 4-338(c)) must be signed by all of the following: A/E of Record, Structural Engineer (when applicable), Delegated Professional Engineer (when applicable), and DSA.

E. Do not begin any work under addendum or construction changes until required DSA written approval is obtained.

PART 2 - PRODUCTS

Not Used

PART 3 - EXECUTION

Not Used

END OF SECTION

SECTION 01 33 00

SUBMITTAL PROCEDURES

PART 1 - GENERAL

1.01 SECTION INCLUDES

A. Submittal procedures.

B. Contractor's construction progress schedules.

C. Shop drawings.

D. Proposed products list.

E. Product data.

F. Samples.

G. Design Data.

H. Test Reports.

I. Manufacturers' instructions.

J. Manufacturer's field reports.

K. Manufacturers' certificates.

1.02 RELATED SECTIONS

A. Section 01 60 00 – Product Requirements: Substitutions.

1.03 SUBMITTAL PROCEDURES

A. Electronic File Availability:

1. Architect's electronic drawing files for this project will be available to Contractor upon written request. The request shall include the drawing sheet number of each drawing being requested. Architect shall respond to the written request using the Delivery of Electronic Files Agreement Form attached at the end of this Section. Contractor shall sign and date the form and return it to Architect prior to the electronic files being delivered to Contractor.

a. Electronic drawing files developed by Architect's Consultants for this project may be available under separate agreement with each consultant. Refer to the directory on the Title/Cover Drawing Sheet for listing of consultant information.

2. Architect's Building Information Model (BIM) for this project will be available to Contractor upon written request. Architect shall respond to the written request using the Delivery of BIM Model Agreement Form attached at the end of this Section. Contractor shall sign and date the form, return it to Architect prior to the BIM files being delivered to Contractor.

B. All submittals shall be provided in electronic format using software acceptable to Architect.

C. Transmit each submittal with a Submittal Form acceptable to Architect. Limit each transmittal to a single submittal item or series of related items.

D. Sequentially number the transmittal forms. Resubmittals shall retain original number with an alphabetic suffix.

E. Identify Project, Contractor, Subcontractor or Supplier; pertinent Drawing sheet and detail number(s), and Specification Section number, as appropriate.

F. Apply Contractor's stamp, signed or initialed certifying that review, verification of products required, field dimensions, adjacent construction Work, and coordination of information, is in accordance with the requirements of the Work and the Contract Documents.

G. Schedule submittals in accordance with construction to expedite the Project, and deliver to Architect at business address. Coordinate submission of related items.

H. Unless otherwise agreed upon in advance, all submittals required within any one specification Section shall be submitted at the same time, in a single package.

I. Identify variations from the Contract Documents and product or system limitations which may be detrimental to successful performance of the completed Work.

J. Revise and resubmit submittals as required, identify all changes made since previous submittal; re-submit within such time as necessary to avoid delay to the Work of the re-submitted item, related Work, and the Project.

K. Acceptance of submittals by Architect is general in nature and shall not relieve Contractor from responsibility for proper fitting and construction of work, nor from furnishing products, materials, and work required by Contract which may not be indicated on submittals.

L. No portion of Work requiring submittals shall be commenced until submittal has been reviewed and accepted by Architect. All such portions of Work shall be in accordance with accepted submittals.

M. Distribute copies of Architect reviewed submittals to concerned parties. Instruct parties to promptly report any inability to comply with provisions.

N. Submit requests for substitution under provisions of Section 01 60 00.

1.04 CONTRACTOR’S CONSTRUCTION PROGRESS SCHEDULE

A. Within thirty days after the Notice to Proceed submit a fully developed, Contractor’s Construction Progress Schedule which meets the following minimum criteria:

1. Submit a computer-generated schedule generated using Primavera P6 or equivalent CPM scheduling software product, with a separate timeline for each significant construction activity.

    a. Equivalency of a proposed substitute CPM scheduling software product shall be determined by the Architect at their sole discretion at Contractor's request.

2. Critical Path Management (CPM) Network Definition: CPM network is a graphic description of the construction plan, showing the sequential steps needed to reach the completion of the Work. It shall depict events and tasks, and their interrelationships, and shall recognize the progress that must be made in one task before subsequent tasks can begin. The CPM network shall be comprehensive and shall include all interdependencies and interactions required to perform the Work of the Project. The only activity in the schedule that will not have a predecessor is the Project Start or Notice to Proceed Milestone. The only activity in the schedule that will not have a successor is the Project Completion Milestone. All other activities in the schedule shall have predecessor and successor logic ties.
3. Prepare the schedule on a sheet, of stable transparency, or other reproducible media, of sufficient width to show data for the entire construction period. Contractor shall also submit an electronic copy of the data used to produce hard copy submittals. The electronic schedule files shall be in Primavera P6 compatible format, unless an equivalent CPM scheduling software product has been accepted by Architect. A PDF file Format is not considered an electronic copy of the schedule submittal.
4. Coordinate each element on the schedule with other construction activities; include minor elements involved in the sequence of the Work. Show each activity in proper sequence. Indicate graphically sequences necessary for completion of related portions of the Work. Indicate early/late start, early/late finish, float dates and duration.
5. Coordinate Contractor's Construction Progress Schedule with the schedule of values, list of subcontracts, submittal schedule, progress reports, payment requests and other schedules. Indicate submittal dates on the schedule for shop drawings, product data, samples, and product delivery dates.
6. Schedule shall allow time for Project closeout procedures.
7. Indicate Final Completion date on Progress Schedule.

    a. Construction Progress Schedule Final Completion date shall be the same as contractual completion date. If dates differ, Construction Progress Schedule will be returned without review.

B. Work Stages: Indicate important stages of construction for each major portion of the Work, including testing and installation.

C. In the event the contractor submits a viable, contractually compliant construction schedule which indicates project completion at a date earlier than the contractually provided contract duration, the acceptance of such a schedule will not change the contract time. In such an event, a schedule activity entitled "project float", of a duration equal to the difference between the proposed construction duration and the contract duration, will be added to the schedule. All project float is a project resource for the Contractor and the Owner, and is not for the exclusive use of either party.

D. Area Separations: Provide a separate time bar to identify each major construction area for each major portion of the Work. Indicate where each element in an area shall be sequenced or integrated with other activities.

E. Cost Correlation: At the head of the Schedule, provide a two item cost correlation line, indicating "precalculated" and "actual" costs. On the line show dollar-volume of Work performed as of the dates used for preparation of payment requests.

F. Initial Schedule will be reviewed by Architect and Owner solely to ensure compliance with the Contract Documents. Architect's response to Contractor will indicate acceptance if the Schedule complies with the Contract Documents, or non-acceptance if it does not comply with the Contract Documents.

G. Distribution: After Architect's review of entire Construction Progress Schedule, print and distribute copies to Architect, Owner, subcontractors, and other parties required to comply with scheduled dates. Post copies in the Project meeting room and temporary field office.

   1. When revisions are made, distribute to the same parties and post in the same locations. Delete parties from distribution when they have completed their assigned portion of the Work and are no longer involved in construction activities.

H. Revisions to the Construction Progress Schedule shall be as follows:

   1. Contractor shall not revise the contractual completion date without an executed Change Order.
   2. All revisions shall accurately reflect the Record Schedule as of date of revision.
   3. Revise the schedule after each meeting or activity where revisions have been recognized or made. Issue the revised schedule concurrently with the minutes of each meeting. A combined three week Look-Ahead Schedule with a one week Record Schedule for the previous week shall be submitted by Contractor to Owner and Architect for review at each progress meeting. The Contractor shall status the schedule on a weekly basis. This Look-Ahead Schedule shall be derived from this weekly statusing. The cumulative status of the Look-Ahead schedules shall be the basis for the Monthly Update submittal. In no event shall the Contractor utilize a separate schedule for generation and maintenance of the Look-Ahead schedules. If the superintendent's and revised Baseline Schedule schedule's logic deviate significantly, a reconciliation of the two schedules shall be required.
   4. Revise the Schedule at the time of each Application for Payment, and clearly identify changes from the previous version. Submit the revised Schedule with the Applications for Payment. Payments are conditional upon Contractor providing the updated schedule.

I. No more than twenty percent of the total number of activities shown on the schedule shall be critical or near critical. Near critical is defined as float less than ten days.

J. Include a critical path activity titled "Remaining Inclement Weather Days" on the Initial Contract Schedule. This activity shall have an initial duration equal to the number of days shown in the West Regional Climate Center website: https://wrcc.dri.edu/cgi-bin/cliMAIN.pl?ca7633; on the left side scroll down to "General Climate Summary Tables", then click on "Precipitation". The inclement weather days with 0.10 inch of precipitation or greater are the average number of monthly inclement weather days normally experienced within the region, and are non-compensable. The total number of days used for the initial duration shall be equal to the contract time indicated in the Contract Documents and the specific months of construction. It shall be the last activity in the schedule prior to the activity titled "Contract Completion". All predecessor activities must pass through the Inclement Weather Days activity. Contractor shall apply to Architect to use an Inclement Weather Day when a critical path activity has been delayed because of inclement weather. This application shall

occur in the same month as the inclement weather delay. The Remaining Inclement Weather Days activity shall not be statused with an actual start or finish date, or percentage of completion. Rather, it is a graphical accounting tool where the original duration shall be reduced by the agreed to weather impact. Inclement Weather Delays to non-critical activities will not be considered. Inclement Weather Days with actual daily rainfall less than 0.10 inch will not be considered. If, at Completion, there are inclement weather days still remaining, the Completion date shall not be adjusted. If, at completion, additional inclement weather days are required, Owner shall adjust the Completion date accordingly. Any time extension granted to Contractor due to inclement weather delays shall be in the form of non-compensable days.

K. As a condition precedent to final acceptance of the Project, submit a final Record Construction Schedule and all final reports which accurately reflect the manner in which the Project was constructed and includes actual start and completion dates for all work activities on the Baseline Schedule.

1.05 SHOP DRAWINGS

A. Shop Drawings: Submit to Architect for review for limited purpose of checking for conformance with information given and design concept expressed in Contract Documents.

B. Shop drawings that are copies of the Contract Document drawings are not allowed.

C. Provide shop drawings to scale showing all details of proposed construction. Indicate special utility and electrical characteristics, utility connection requirements, and location of utility outlets for service for functional equipment and appliances.

D. When required by individual specification Sections, provide shop drawings signed and sealed by professional engineer responsible for designing components shown on shop drawings.

1. Include signed and sealed calculations to support design.
2. Submit drawings and calculations in form suitable for submission to and approval by authorities having jurisdiction.
3. Make revisions and provide additional information when required by authorities having jurisdiction.

E. Submit shop drawings in electronic format.

1. Assemble complete submittal package into a single indexed file incorporating submittal requirements of a single Specification Section and transmittal form with links enabling navigation to each item.
2. Name file with submittal number or other unique identifier, including revision identifier.

F. After review and acceptance by Architect, Contractor shall distribute in accordance with Article 1.3 above and provide copies for Record Documents described in Section 01 70 00.

1.06 PROPOSED PRODUCTS LIST

A. Within fifteen days after the date of the Owner-Contractor Agreement, submit complete list of major products proposed for use, with name of manufacturer, trade name, and model number of each product.

B. For products specified only by reference standards, give manufacturer, trade name, model or catalog designation, and reference standards.

1.07 PRODUCT DATA

A. Product Data: Submit to Architect for review for limited purpose of checking for conformance with information given and design concept expressed in Contract Documents.

B. Submit product data as required by individual Specification Sections.

C. Submit product data in electronic format.

1. Assemble complete submittal package into a single indexed file incorporating submittal requirements of a single Specification Section and transmittal form with links enabling navigation to each item.
2. Name file with submittal number or other unique identifier, including revision identifier.

D. Mark each submittal to identify applicable products, models, options, and other data. Supplement manufacturers' standard data to provide information unique to this Project.

E. Indicate product utility and electrical characteristics, utility connection requirements, and location of utility outlets for service for functional equipment and appliances.

F. After review and acceptance by Architect, Contractor shall distribute in accordance with Article 1.3 above and provide copies for Record Documents described in Section 01 70 00.

G. Maintain a copy of all Material and Safety Data Sheets (MSDS) at the jobsite at all times, and be ready to furnish MSDS upon request or have ready access to MSDS in emergencies.

1.08 SAMPLES

A. Samples: Submit to Architect for review for limited purpose of checking for conformance with information given and design concept expressed in Contract Documents.

B. Submit samples to illustrate functional and aesthetic characteristics of products, with integral parts and attachment devices. Coordinate sample submittals for interfacing work.

C. Submit samples of finishes from the full range of manufacturers' standard colors, textures, and patterns for Architect’s selection.

D. Include identification on each sample, with complete product information.

E. Submit the number or samples specified in individual specification Sections plus one additional sample which will be retained by Architect. Provide a minimum of two samples.

F. Reviewed samples which may be used in the Work are indicated in individual specification Sections.

G. Samples will not be used for testing purposes unless specifically stated in specification Section.

1.09 DESIGN DATA

A. Submit for Architect's knowledge as contract administrator or for Owner.

B. Submit for information for limited purpose of assessing conformance with information given and design concept expressed in Contract Documents.

1.10 TEST REPORTS

A. Submit for Architect's knowledge as contract administrator or for Owner.

B. Submit test reports for information for limited purpose of assessing conformance with information given and design concept expressed in Contract Documents.

1.11 MANUFACTURER'S INSTRUCTIONS

A. When specified in individual specification Sections, submit manufacturers' printed instructions for delivery, storage, assembly, installation, adjusting, and finishing, in quantities specified for Product Data.

B. Indicate special procedures, perimeter conditions requiring special attention, and special environmental criteria required for application or installation.

C. Identify conflicts between manufacturers' instructions and the Contract Documents.

1.12 MANUFACTURER’S FIELD REPORTS

A. Submit reports for Architect's benefit as contract administrator or for Owner.

B. Submit report within three days of observation to Architect for information.

C. Submit for information for limited purpose of assessing conformance with information given and design concept expressed in Contract Documents.

1.13 MANUFACTURER'S CERTIFICATES

A. When specified in individual specification Sections, submit manufacturers' certificate to Architect for review, in quantities specified for Product Data.

B. Indicate material or product conforms to or exceeds specified requirements. Submit supporting reference data, affidavits and certifications, as appropriate.

C. Certificates may be based on recent or previous test results of materials or products, and shall be acceptable to Architect.

PART 2 - PRODUCTS

Not Used

PART 3 - EXECUTION

Not Used

END OF SECTION

DELIVERY OF ELECTRONIC FILES AGREEMENT FORM

[Date]

[Contractor's Name]
[Contractor's Address]

Re: LUTHER BURBANK HS FENCING

Dear **[Name]**:

At your request, Lionakis will provide Architectural and/or Structural electronic files of the image depicted on each drawing sheet for your convenience and use in the preparation of shop drawings related to LUTHER BURBANK HS FENCING, subject to the following terms and conditions:

Lionakis makes no representation as to the compatibility of electronic files with your hardware or your software.

Data contained in these electronic files are part of our instruments of service and shall not be used by you or anyone else receiving these data through or from you for any purpose other than as a convenience in the preparation of shop drawings for the referenced project. Any other use or reuse by you or by others will be at your sole risk and without liability or legal exposure to Lionakis. You agree to make no claim and hereby waive, to the fullest extent permitted by law, any claim or cause of action of any nature against Lionakis, Lionakis' officers, directors, employees, agents or sub-consultants that may arise out of or in connection with your use of the electronic files.

Furthermore, you shall, to the fullest extent permitted by law, indemnify and hold Lionakis harmless against all damages, liabilities or costs, including reasonable attorney's fees and defense costs, arising out of or resulting from your use of these electronic files.

These electronic files are not construction documents. Differences may exist between these electronic files and corresponding hard-copy construction documents. Lionakis makes no representation regarding the accuracy or completeness of the electronic files you receive. In the event that a conflict arises between the signed or sealed hard-copy construction documents prepared by Lionakis and the electronic files, the signed or sealed hard-copy construction documents shall govern. You are responsible for determining if any conflict exists. By your use of these electronic files, you are not relieved of your duty to fully comply with the Contract Documents, including, and without limitation, the need to check, confirm and coordinate all dimensions and details, take field measurements, verify field conditions and coordinate your work with that of other contractors for the project.

Because information presented on the electronic files can be modified, unintentionally or otherwise, we reserve the right to remove all indications of ownership and/or involvement from each electronic display.

We will furnish you electronic files of the following Architectural and/or Structural drawing sheets:

_____

_____

Under no circumstances shall delivery of the electronic files for use by you be deemed a sale by Lionakis, and Lionakis makes no warranties, either express or implied, of merchantability and fitness for any particular

purpose. In no event shall Lionakis be liable for any loss of profit or any consequential damages as a result of your use or reuse of these electronic files.

Electronic files will be sent to you after signed acknowledgement of this letter is received by Lionakis.

Accepted By:

_____
Contractor's Signature

_____
Date

END OF SECTION

DELIVERY OF BIM MODEL AGREEMENT FORM

Date: _____

Recipient's Name: _____

Recipient's Address: _____

Re: LUTHER BURBANK HS FENCING

At your request, Lionakis will provide the BIM model for your convenience and use, subject to the following terms and conditions:

Lionakis makes no representation as to the compatibility of the BIM model with your hardware or your software beyond the specified release of the applicable software.

Data contained on the BIM model is part of our instruments of service and shall not be used by you or anyone else receiving these data through or from you for any purpose other than as a convenience. Any other use or reuse by you or by others will be at your sole risk and without liability or legal exposure to Lionakis. You agree to make no claim and hereby waive, to the fullest extent permitted by law, any claim or cause of action of any nature against Lionakis, Lionakis' officers, directors, employees, agents, or sub-consultants that may arise out of or in connection with your use of the BIM model.

Furthermore, you shall, to the fullest extent permitted by law, indemnify and hold Lionakis harmless against all damages, liabilities, or costs, including reasonable attorney's fees and defense costs, arising out of or resulting from your use of the BIM model.

This BIM model is not construction documents. Differences may exist between the BIM model and corresponding hard-copy construction documents. Lionakis makes no representation regarding the accuracy or completeness of the BIM model you receive. In the event that a conflict arises between the signed or sealed hard-copy construction documents prepared by Lionakis and the BIM model, the signed or sealed hard-copy construction documents shall govern.

Because information presented on the BIM model can be modified, unintentionally or otherwise, we reserve the right to remove all indications of ownership and/or involvement from the BIM model.

Under no circumstances shall delivery of the BIM model for use by you be deemed a sale by Lionakis, and Lionakis makes no warranties, either express or implied, of merchantability and fitness for any particular purpose. In no event shall Lionakis be liable for any loss of profit or any consequential damages as a result of your use or reuse of the BIM model. The BIM model shall be provided in Revit 20__.

The BIM model will be sent to you after signed acknowledgement of this letter is received by Lionakis.

Accepted By:

_____

Recipient's Signature

_____

Date

SECTION 01 57 13

EROSION CONTROL

PART 1 - GENERAL

1.01 SUMMARY

A. General: Provide all materials, equipment and labor necessary to furnish and install straw wattles at locations as required throughout construction.

B. Storm Water Pollution Prevention Plan: A SWPPP plan/permit will not be required. The Contractor shall as a minimum address:

1. Cut and fill operations.
2. Temporary stockpiles.
3. Vehicle and equipment storage, maintenance and fueling operations.
4. Concrete, plaster, mortar and paint disposal.
5. Dust control.
6. Tracking of dirt, mud on off-site streets.
7. Erosion Controls
8. Sediment Controls

1.02 QUALITY ASSURANCE

. General: Comply with governing codes and regulations.

PART 2 - PRODUCTS

2.01 MATERIALS

A. Straw Wattles: Shall be new manufactured straw roles in compliance with state requirements for sediment control.

A. Filter Bag: Shall be as required by local jurisdiction.

PART 3 - EXECUTION

3.01 INSTALLATION

A. All BMPS shall be installed per CASQA standards.

3.02 MAINTENANCE AND REMOVAL:

A. General: Maintain and repair existing and new erosion control facilities throughout the construction period. Remove silt build up at straw wattles and/or silt fences as needed. Repair damage to earth slopes and banks. Erosion control measures shall be left in place until hydroseed is placed.

B. Cleaning: Keep area clean of debris.

C. Remove all sediment control measures following site stabilization.

END OF SECTION

SECTION 01 60 00

PRODUCT REQUIREMENTS

PART 1 - GENERAL

1.01 SECTION INCLUDES

A. Products.

B. Product Delivery Requirements.

C. Product Storage and Handling Requirements.

D. Product Options.

E. Product Substitution Procedures.

1.02 PRODUCTS

A. Products: Means new material, machinery, components, equipment, fixtures, and systems forming the Work. Does not include machinery and equipment used for preparation, fabrication, conveying and erection of the Work. Products may also include existing materials or components required for reuse.

B. All products shall be new, of first class quality, and shall be delivered, installed, connected and finished in every detail, and shall be so selected and arranged as to fit correctly into the proper spaces. Where no specific kind or quality of material is given, a first-class standard article as approved by Architect shall be furnished. Contractor shall provide satisfactory evidence as to the kinds and quality of material and workmanship.

C. Do not use materials and equipment removed from existing premises, except as specifically permitted by the Contract Documents.

D. Furnish interchangeable components from same manufacturer for components being replaced.

1.03 PRODUCT DELIVERY REQUIREMENTS

A. Transport and handle products in accordance with manufacturer's instructions.

B. Delivery of materials to the project site shall be coordinated by and received by Contractor or their representative, and stored in secured areas as agreed upon at the job start meeting.

C. Promptly inspect shipments to assure that products comply with requirements, quantities are correct and products are undamaged.

D. Provide equipment and personnel to handle products by methods to prevent soiling, disfigurement or damage.

E. Contractor shall take into consideration the available space and location of work site when delivery of materials is necessary.

1.04 PRODUCT STORAGE AND HANDLING REQUIREMENTS

A. Store and protect products in accordance with manufacturer's instructions, with seals and labels intact and legible. Store sensitive products in weather tight, climate controlled, enclosures in an environment favorable to product.

B. For exterior storage of fabricated products, place on sloped supports above ground.

C. Provide off-site storage and protection when site does not permit on-site storage or protection.

D. Cover products subject to deterioration with impervious sheet covering. Provide ventilation to avoid condensation and degradation of products.

E. Store loose granular materials on solid flat surfaces in well-drained area. Prevent mixing with foreign matter.

F. Provide equipment and personnel to store products by methods to prevent soiling, disfigurement, or damage.

G. Arrange storage of products to permit access for inspection. Periodically inspect to assure products are undamaged and are maintained under specified conditions.

H. Contractor shall be responsible to provide all new materials in unopened manufacturer's original containers and deliver such items to project site in good condition for use on this project. Contractor shall be responsible to store all new materials received as per manufacturer recommendations. Any and all materials discovered to be improperly stored and/or damaged will be replaced at the sole expense to Contractor. Any requests for delays or extension of the Contract Time due to the above will not be considered.

I. Contractor shall use all means necessary to protect all materials before, during and after installation and to protect the installed work and materials of all other trades and of existing structures. In event of damage, Contractor is to immediately make all repairs and replacements necessary using compatible and like materials.

1.05 PRODUCT OPTIONS

A. Products Specified by Reference Standards or by Description Only: Any product meeting those standards or description.

B. Products Specified by Naming One Manufacturer and stating “No Substitutions Allowed, Owner’s Standard”: Products of manufacturer named and meeting specifications, no options or substitutions allowed.

C. Products Specified by Naming One or More Manufacturers without naming a Product, with a Provision for Substitutions: Submit a request for substitution for any manufacturer not named.

D. Products specified by Naming One or More Manufacturers and Naming Product(s) by the first listed Manufacturer, with a Provision for Substitutions: Submit a request for substitution for any product, by any manufacturer, listed or not listed, other than the product(s) listed.

E. Basis-of-Design Product Specification: Where a specific manufacturer's product is named and accompanied by the words "Basis-of-Design", including make or model number or other designation, to establish the significant qualities related to type, function, dimension, in-service performance, physical properties, appearance, and other characteristics for purposes of evaluating comparable products of other manufacturers, whether listed or not. Submit a substitution request for any product, by any manufacturer, listed or not listed, other than the product(s) listed as "Basis-of-Design".

1.06 PRODUCT SUBSTITUTION PROCEDURES

A. Architect will consider requests for Substitutions only within 35 days after Award of the Contract.

B. Reference to any product, material, equipment, article, system, service or patented process, by trade, catalogue number, name brand product or product manufacturer is for information only and shall not be construed as limiting competition.

C. Substitutions will only be considered when one or more of the following conditions are met:

1. All aspects of the proposed substitution meet or exceed the criteria for the specified product.
2. The proposed changes are in keeping with the general intent of the Contract Documents.
3. The request is fully documented and timely and properly submitted.
4. The specified product cannot be provided within the Contract Time.
5. The request is directly related to an "or equal" clause or similar language in the Contract Documents.
6. The request offers Owner a substantial advantage in cost, time, energy conservation, or other considerations, after deducting additional responsibilities that Owner must assume. Owner's additional responsibilities may include, but not be limited to, compensation to Architect for redesign and/or evaluation services and increased cost of other construction by Owner.
7. The specified product becomes unavailable through no fault of Contractor.
8. The specified product cannot receive necessary approvals by governing authorities, and the requested substitution can be approved by governing authorities in a timely manner.
9. It can be demonstrated that the specified product cannot be provided in a manner that is compatible with other materials and Contractor certifies that the proposed substitution will overcome the incompatibility.
10. It can be demonstrated that the specified product cannot be coordinated with other materials and Contractor certifies that the proposed substitution can be coordinated.
11. The specified product cannot provide the warranty required by the Contract Documents and Contractor certifies that the proposed substitution provides the required warranty.

D. Substitutions will not be considered when one or more of the following conditions occur:

1. Acceptance would require revisions to the Contract Documents, Contract Time extensions or an increase in the Contract Sum.
2. They are indicated or implied on shop drawing or product data submittals, without separate written request.

3. When the specified product cannot be provided as a result of failure of Contractor to pursue the Work in a timely manner or properly coordinate construction activities.

E. In those cases where the Specifications designate a product, material, equipment, article, system, service or patented process by specific brand or trade name and there is only one brand or trade name listed, the item involved is:

1. Required to be used since it is a unique or novel product application, or
2. Required to match other products in use by Owner, or
3. Is the only brand or trade name known to Architect.

F. Document each request on Substitution Request Form attached at the end of this Section with complete data substantiating compliance of proposed Substitution with the Contract Documents. The burden of proof as to comparative quality, suitability and performance of proposed product(s), material(s), equipment, article(s), system(s), service(s) or patented process(es) shall be upon Contractor. Architect will be the sole judge of the equality of the proposed substitution versus the specified item(s).

G. A substitution request constitutes a representation that Contractor:

1. Has investigated proposed product and determined that it meets or exceeds the quality level of the specified product.
2. Will provide the same or better warranty for the Substitution as for the specified product.
3. Will coordinate installation and make changes to other Work which may be required for the Work to be complete with no additional cost to Owner.
4. Waives claims for additional costs or time extensions which may subsequently become apparent.
5. Will reimburse Owner for review services associated with approvals by authorities having jurisdiction.

H. Substitution Submittal Procedure:

1. Submit three copies of request for Substitution for consideration. Limit each request to one proposed Substitution.
2. Submit shop drawings, product data, and certified test results attesting to the proposed product equivalence.
3. Architect will notify Contractor, in writing, of decision to accept or reject request.
4. Incomplete Substitution Request package will not be reviewed and will be returned to Contractor. Contractor shall then provide the specified item.
5. Only one request for substitution will be allowed. If proposed substitution is not accepted by Architect, Contractor shall provide the specified item.
6. Use of accepted substitutions shall in no way relieve Contractor from responsibility for compliance with Drawings and Specifications.
7. All costs associated with accepted substitutions shall be borne by Contractor including, but not limited to, required changes to the Project's design, architectural and/or engineering design fees, detailing, Agency approvals and fees, and all additional construction costs caused by substitution.
8. All substitutions affecting structural or fire/life safety items will require approval from DSA prior to fabrication and installation on the project.

PART 2 - PRODUCTS

2.01 MATERIALS

A. Materials furnished shall be new and never been used before, unless specified otherwise, and will satisfy the requirements herein and all specifications referenced by provisions within these specifications. Contractor shall furnish, upon request of Architect, an affidavit from the manufacturer or supplier to the effect that materials furnished shall conform to the General Conditions, the latest revision of AWWA Specifications, ASTM, and Federal Specifications that pertain. All materials shall be installed in accordance with manufacturer's recommendations and the Standard Drawings and Specifications that pertain. Material for one specific product shall be one manufacturer unless otherwise approved by Architect. All materials shall be subject to inspection after delivery to the site and during installation of the work. Failure of the Inspector or Architect to note faulty material shall not relieve Contractor of the responsibility for removing or replacing any such material at no additional cost to Owner.

B. For the ease of maintenance and parts replacement, to the maximum extent possible use materials of a single manufacturer, delivered in manufacturer's original, unopened containers with labels intact and legible, and in sufficient quantity to allow continuity of work. Deviation from this requirement shall require written approval from Owner and Architect.

C. Architect reserves the right to reject any materials list which contains materials from various manufacturers if suitable materials can be secured from fewer manufacturers and to require that source of materials be unified to maximum extent possible.

PART 3 - EXECUTION

Not Used

END OF SECTION

SUBSTITUTION REQUEST FORM

SUBSTITUTION REQUEST NUMBER: _____

TO: _____

PROJECT: _____

SPECIFIED ITEM:

Section	Page	Paragraph	Description

The undersigned requests consideration of the following:

Proposed Substitution (Manufacturer, Model # or Name, Color, Etc.): _____

History: ___New Product, ___Available 2-5 Years, ___Available 6-10 Years, ___Available 10+ Years

Provide UL, ITS, WHI, (or other) listing / rating of proposed substitution: _____

Attached data shall include, but not be limited to, product, specification, drawings, performance and test data adequate for evaluation of the request for the proposed substitution product and the specified product, with applicable portions of the proposed substitution and the specified product data clearly identified in a point-by-point direct comparison chart. Incomplete form and attachments will result in rejection of substitution request.

Requestor shall address the following items on this Substitution Request Form. Use a separate attached sheet attached as needed:

1. Reason for not providing specified item:

   _____

   _____

2. Will proposed substitution affect dimensions indicated on Drawings? ___(Yes) ___(No)

   If yes, how? _____

3. Will proposed substitution affect Electrical, Mechanical, Structural, Architectural, etc.?
   ____(Yes) ____(No) If yes, explain:

   _____

   _____

4. Is proposed substitution larger or smaller than specified product? ___(Yes) ___(No)
   If yes, state size of substitute product:

   _____

5. Does proposed substitution weight less/more than specified product? ___ (Yes) ___ (No)
   If yes, state weight of substitute product:
   _____

6. Will proposed substitution affect other trades and/or parts of the work? ___ (Yes) ___ (No)
   If yes, explain all effects:
   _____
   _____

7. Comparison between proposed substitution and specified product (Similarities / Differences)?
   _____
   _____

8. If Substitution Request is accepted, Owner will receive a credit of $_____. The Contract Sum will be adjusted accordingly.

9. Will proposed substitution affect the Contract Time? ___ (Yes) ___ (No)
   If yes, ____(Add) ____(Deduct) _____ calendar days.

INITIAL	UNDERSIGNED CERTIFIES:
_____	Proposed substitution has been fully investigated and determined to be equal or superior in all respects to specified product.
_____	Proposed substitution has same or better warranty as specified product.
_____	Proposed substitution has same or better maintenance service and availability of replacement parts as specified product.
_____	Proposed substitution will not affect or delay the Construction Schedule.
_____	Claims for additional costs related to accepted substitution, which may subsequently become apparent, are hereby waived.
_____	Proposed substitution will not affect dimensions and functional clearances.
_____	Coordination, installation, and changes in the Work as necessary for installation of accepted substitution will be complete in all respects, at no additional cost to Owner.
_____	Contractor will pay for all costs associated with changes to the project's design, including, but not limited to, architectural or engineering design fees, detailing, Agency approvals and construction costs caused by the requested substitution.
_____	The function, appearance and quality of the proposed substitution is equivalent or superior to the specified item.

The undersigned certifies that the above is accurate and correct.

Signature: _____

Company: _____

Address: _____

_____

Date: _____

Telephone: _____

Attachments: ___Drawings ___Product Data ___Samples ___Tests ___Reports ___Other (Describe)

_____

Architect's Review and Action:

_____ Substitution Accepted – Make submittals in accordance with Specification Division 01.

_____ Substitution Accepted as Noted - Make submittals in accordance with Specification Division 01.

_____ Substitution Rejected – Provide specified product.

_____ Substitution Request Received Too Late – Provide specified product.

By: _____ Date:_____

Remarks: _____

_____

SECTION 01 73 29

CUTTING AND PATCHING

PART 1 - GENERAL

1.01 SECTION INCLUDES

A. Procedural requirements and limitations for cutting and patching work.

B. Patching of existing materials and construction disturbed by Work under this Contract, including repair of damage to existing materials and construction caused by:

1. Installation of new products, materials, and equipment or systems.
2. Relocation or reinstallation of existing products, materials, and equipment or systems.

1.02 RELATED SECTIONS

A. Section 01 33 00 – Submittal Procedures.

B. Section 01 60 00 – Product Requirements: Product options and substitutions.

C. Divisions 02 through 49 Sections for specific requirements and limitations applicable to cutting and patching individual parts of the Work, including the following:

1. Cutting and patching incidental to work of the individual Section.
2. Advance notification to other Sections of openings required in work of those Sections.
3. Limitations on cutting structural members.

1.03 SUBMITTALS

A. Submit written request in advance of cutting or patching which affects:

1. Integrity of moisture-resistant, water-resistant, and exposed to weather elements.
2. Utility services and mechanical/electrical systems.
3. Operational elements.
4. Visual qualities of sight exposed elements.
5. Existing structural elements.
6. Efficiency, maintenance, or safety of element.
7. Work of Owner or separate contractor.

B. Include in request:

1. Identification of Project.
2. Location and description of affected Work.
3. Necessity for cutting or patching.
4. Description of proposed Work and products to be used.
5. Alternatives to cutting and patching.
6. List of services and systems that will be temporarily out of service and length of disruption.
7. List of services and systems that will be relocated.

8. Reinforcement to structural elements, with details and engineering calculations showing integration of reinforcement with original structure.
9. Effect on work of Owner or separate contractor.
10. Written permission of affected separate contractor.
11. Date and time the work will be executed.

C. Architect's, Owner's, and DSA's Approval: Obtain approval of cutting and patching submittals before commencing cutting and patching work. Approval does not waive the right to require removal and replacement of unsatisfactory work.

1.04 DEFINITIONS

A. Cutting: Removal of in-place construction for installation or performance of other Work.

B. Patching: Repair work required for restoration of damaged surfaces to original condition after installation of other Work.

1.05 QUALITY ASSURANCE

A. Structural Elements: Do not cut and patch structural elements in a manner that could change their load-carrying capacity or load-deflection ratio.

B. Operational Elements: Do not cut and patch operating elements and related components in a manner that results in reducing their capacity to perform as intended or results in increased maintenance or decreased operational life or safety.

C. Cutting and Patching Conference: Before proceeding, meet at Project site with parties involved in cutting and patching work, including mechanical and electrical trades. Review areas of potential interference and conflict. Coordinate procedures and resolve potential conflicts before proceeding.

1.06 WARRANTY

A. Existing Applicable Warranties: Remove, replace, patch, and repair materials and surfaces cut or damaged during cutting and patching operations, by appropriate methods and with suitable materials so that existing applicable warranties are not voided.

PART 2 - PRODUCTS

2.01 MATERIALS

A. Primary Products: Those required for original installation.

B. Product Substitution: For any proposed change in materials, submit request for substitution as specified in Section 01 60 00.

PART 3 - EXECUTION

3.01 EXAMINATION

A. Examine existing conditions prior to commencing Work, including elements subject to damage or movement during cutting and patching.

B. After uncovering existing work, assess conditions affecting performance of Work.

C. Beginning of cutting or patching means acceptance of existing conditions.

D. Identify hazardous substances or conditions exposed during the Work to Architect for decision or remedy.

3.02 PREPARATION

A. Provide temporary supports to ensure structural integrity of the Work. Provide devices and methods to protect other portions of Project from damage.

B. Provide protection from elements for areas which may be exposed by uncovering Work.

C. Maintain excavations free of water.

3.03 CUTTING

A. Execute cutting and fitting to complete the Work.

B. Uncover in-place Work to reinstall improperly sequenced Work.

C. Remove and replace defective or non-conforming Work.

D. Obtain material samples of installed Work for testing, when requested.

E. Provide openings in the Work for penetration of mechanical and electrical work.

F. Employ experienced installer to perform cutting of moisture-resistant, water-resistant, exposed to weather elements, and surfaces exposed to view.

G. Cut rigid materials in straight, true, and parallel or perpendicular lines.

H. In general, use hand or small power tools designed for sawing and grinding, not hammering and chopping. Cut holes and slots as small as possible, neatly to size required, and with minimum disturbance of adjacent surfaces. Temporarily cover openings when not in use.

I. Cut masonry and concrete materials using masonry saw or core drill.

J. Pneumatic tools are not allowed without prior approval from Architect and Owner.

K. Mechanical and Electrical Services: Cut off pipe or conduit in construction to be removed. Cap, valve, or plug and seal remaining portion of pipe or conduit to prevent entrance of moisture or other foreign matter after cutting.

L. Excavating and Backfilling: Comply with requirements in applicable Division 31 Sections where required by cutting and patching operations.

3.04 PATCHING

A. Execute patching to complement adjacent Work.

B. Fit products together to integrate with other Work.

C. Execute Work by appropriate methods to avoid damage to other Work and to provide surfaces suitable for patching and finishing.

D. Employ experienced installer to perform patching of moisture-resistant, water-resistant, exposed to weather elements, and surfaces exposed to view.

E. Restore Work with new materials and products in accordance with requirements of the Contract Documents.

F. Fit Work tight to pipes, sleeves, ducts, conduit, and other penetrations through surfaces.

G. Refinish surfaces to match adjacent finish in all respects (type, texture, thickness, color, etc.). For continuous surfaces, refinish to nearest intersection or natural break. For an assembly, refinish entire unit.

3.05 CLEANING

A. Clean areas and spaces where cutting and patching are performed. Completely remove paint, mortar, oils, putty, and similar materials.

END OF SECTION

SECTION 02 41 00

SITE DEMOLITION

PART 1 – GENERAL

1.01 SUMMARY

A. RELATED SECTIONS

1. The General Conditions, Supplementary Conditions and Division 1 are fully applicable to this Section, as if repeated herein.
4. Section 31 00 00 - Earthwork.
5. Section 31 13 16 - Tree Protection.

1.02 REGULATORY REQUIREMENTS

A. Conform to applicable jurisdictional authority regulations and codes for disposal of debris.

B. Coordinate clearing Work with utility companies

C. Maintain emergency access ways at all times.

D. Contractor shall comply with all applicable laws and ordinances regarding hazardous materials, including contaminated soils, hazardous material transformers, and similar materials or components.

1.03 SUBMITTALS:

A. Schedule: Submit a detailed sequence of demolition and removal work, including dates for shutoff, capping, and continuance of utility services.

B. Procedures: Submit written procedures documenting the proposed methods to be used to control dust and noise.

1.04 EXISTING CONDITIONS

A. Contractor shall acquaint himself with all site conditions. If unknown active utilities are encountered during work, notify Architect promptly for instructions. Failure to notify will make Contractor liable for damage to these utilities arising from Contractor's operations subsequent to discovery of such unknown active utilities.

B. Conduct demolition to minimize interference with adjacent structures or items to remain. Maintain protected egress and access at all times.

1.05 PROTECTION

A. Adequate protection measures shall be provided to protect workmen and passers-by on and off the site. Adjacent property shall be fully protected throughout the operations. Blasting will not be permitted. Prevent damage to adjoining improvements and properties both above and below grade. Restore such improvements to original condition should damage occur. Replace trees and shrubs outside building area disturbed by operations.

B. In accordance with generally accepted construction practices, the Contractor shall be solely and completely responsible for working conditions at the job site, including safety of all persons and property during performance of the work. This requirement shall apply continuously and shall not be limited to normal working hours.

C. Safety Precautions Prevent damage to existing elements identified to remain or to be salvaged, and prevent injury to the public and workmen engaged on site. Demolish roofs, walls and other building elements in such manner that demolished materials fall within foundation lines of building. Do not allow demolition debris to accumulate on site. Pull down hazardous work at end of each day; do not leave standing or hanging overnight, or over weekends.

1. Protect existing items which are not indicated to be altered. Protect utilities designated to remain from damage.
2. Protect trees, plant growth, and features designated to remain as final landscaping as shown on drawings.
3. Protect benchmarks from damage or displacement.

D. Trees: Carefully protect existing trees that are to remain. Provide temporary irrigation as necessary to maintain health of trees.

E. Fire Safety: The contractor shall conform to chapter 33 of the California Fire Code (CFC), "Fire Safety During Construction and Demolition”, at all times during the construction process. A copy of this chapter can be provided.

F. Any construction review of the Contractor's performance conducted by the Geotechnical Engineer is not intended to include review of the adequacy of the Contractor's safety measures, in, on, or near the construction site.

G. Surface Drainage: Provide for surface drainage during period of construction in manner to avoid creating nuisance to adjacent areas. The contractor shall make a reasonable effort on a daily basis to keep all excavations and the site free from water during entire progress of work, regardless of cause, source, or nature of water.

H. Adjacent streets and sidewalks shall be kept free of mud, dirt or similar nuisances resulting from earthwork operations.

I. The site and adjacent influenced areas shall be watered as required to suppress dust nuisance. Dust control measures shall be in accordance with the local jurisdiction.

PART 2 - PRODUCTS

Not Used

PART 3 – EXECUTION

3.01 EXAMINATION

A. Examine conditions of work in place before beginning work, report defects.

B. Report existence of hazardous materials or unsafe structural conditions.

3.02 PREPARATION

A. Scheduling:

1. General: Coordinate and schedule demolition work as required by the Owner and as necessary to facilitate construction progress.

B. Hazardous Materials:

1. General: Identify chemicals, gases, explosives, acids, flammables, or other dangerous materials before proceeding with demolition operations, and notify such jurisdictional agencies as may be required. Collect and legally dispose of such materials at official disposal locations away from the site.
2. Asbestos: If asbestos or materials containing asbestos are encountered, stop work immediately and contact the Owner. Do not proceed with demolition until directed by Owner.

C. Utility and Service Termination

1. Locate and identify existing utility, service and irrigation system components affected by work of this contract. Review existing record drawings, conduct site investigations, contact Underground Service Alert and other qualified cable/pipe/line locator services, and implement all other means necessary to define the location of underground systems.
2. Prior to beginning any demolition, properly disconnect all water, gas and electrical power supply at appropriate disconnect locations. Obtain all necessary releases and approvals from serving utility companies.
3. Prior to demolition or disconnect, obtain Owner's approval that such system does not impact facilities or systems beyond the extent of this contract.
4. Mark location of disconnected systems. Identify and indicate stub-out locations on Project Record Documents.

D. Verify that existing plant life and features designated to remain are tagged or identified.

1. The Architect will mark the features, trees, and shrubs to remain within the construction area. Contractor shall not commence clearing and grubbing operations until authorized by the Owner and all protective measures are in place.

E. Coordinate the time and duration of all system disconnects with Owner.

3.03 DEMOLITION

A. General Requirements

1. Clear areas required for access to site and execution of Work, including pavements, structures, foundations, vegetation, trash and debris.
2. Coordinate with Owner the time of day and route to remove demolished materials from premises.
3. Remove demolished materials from site as work progresses. Upon completion of work, leave areas of work in clean condition.
4. Remove all buried debris, rubble, trash, or other material not deemed suitable by the Geotechnical Engineer.
5. Fill all voids or excavations resulting from clearing, demolition, or removal of vegetation with specified fill material.

B. Fixture and Equipment Removal:

1. Remove existing fixtures and equipment as identified and shown on drawings and required by Architect.
2. Verify all service connections to fixtures and equipment designated for removal have been properly disconnected.
3. Remove all conductors from conduit at all abandoned circuits.

C. Play Equipment Removal:

1. Remove existing play equipment as identified and shown on drawings and required by Architect.
2. Coordinate salvage rights with District for individual components, fasteners, slides, etc. prior to demolition and removal from site.

3.04 UTILITY AND BUILDING SERVICES REMOVAL AND RE-INSTALLATION

A. Where crossing paths and potential points of interference with existing utility services are shown or can be reasonably inferred from surface conditions or evidence of subsurface systems, such as meter boxes, vaults, relief vents, cleanouts and similar components.

1. Review all contract documents showing crossing paths and potential points of interference.
2. Pothole or determine by other means the accurate depth and location of such utilities.
3. Incorporate all costs required to complete work under this contract, including additional trenching, re-routing of existing and new utilities, and all means necessary to construct work under this contract.
4. No additional cost to the Owner will be allowed for work necessary to accommodate utility conflicts where such crossing paths are shown on contract drawings or can be reasonably inferred from surface conditions or components.

B. Remove all conductors from conduit at all abandoned electrical circuits.

C. Seal off ends of all piping, drains and other components as directed by Architect and serving utility.

D. Where necessary to maintain service to existing utility and building systems, relocate or redirect all conduit and conductors, piping, drains, and associated system components.

1. Re-circuit all electrical as required.
2. Re-circuit all landscape irrigation valving and control systems as required.
3. Temporarily terminate landscape system components in approved boxes or with approved caps, suitable for re-connection or extension.
4. Extend or otherwise modify all site drainage systems, including catch basins, drain inlets and piping. Fine grade to maintain proper drainage flow pattern to drains.

E. Demolish structure in an orderly and careful manner.

1. Use of explosives prohibited.

3.05 SITE PAVEMENT REMOVAL

A. Remove sidewalk and curb where required for new construction as specified and as indicated on the Drawings.

1. Remove all paving by saw-cutting.
2. Remove concrete paving and curbing at locations shown on drawings. Locate closest adjacent expansion or weakened plane joint to define start of removal or saw-cutting.

B. Remove asphalt concrete paving areas where required for new construction as specified and as indicated on the Drawings.

1. Remove all paving by saw-cutting.
2. Remove paving assembly as required to expose subgrade.

3.06 LANDSCAPE AND IRRIGATION SYSTEMS DEMOLITION AND RENOVATION

A. Clearing, grubbing, and planting demolition.

1. Remove grass and grass roots to a minimum depth of two inches below existing grade.
2. Remove all shrubs, plants and other vegetation within the area of the work unless designated to remain. Grub and remove all roots of all vegetation to a depth of 24 inches below existing grade.
3. Remove only those trees which are specifically designated for removal, or as shown on the drawings, within the construction area. Remove all stumps. Remove root ball and root systems larger than 1 inch in diameter to a depth of two feet below existing or finished grades, whichever is lower and a minimum of five feet beyond the edge of paving, structure, wall or walkway.
4. Hand cut existing tree roots over 1 inch in diameter as necessary for trenching or other new construction, apply multiple coats of emulsified asphalt sealant especially made for horticultural use on cut or damaged plant tissues to cut faces and adjacent surfaces. Cover exposed roots with wet burlap to prevent roots from dying out until backfilling is complete.
5. Disking and mixing of vegetation, trash, debris, and other deleterious materials with surface soils prior to grading is not permitted.

6. Remove all buried debris, organic material, rubble, trash, or other material not deemed suitable by the Geotechnical Engineer.
7. Fill all voids or excavations resulting from clearing, demolition, or removal of vegetation with fill material in compliance with Section 31 00 00.
8. Selected equipment of such sizes and capacities that the existing environment is disturbed as little as possible, and to afford ease of mobility within limited and relatively confined work areas. Make every effort to preserve the topography in its natural state.
9. Keep drains, catch basins, surface drainage courses and related drainage system components clear of debris and construction materials.
10. Remove irrigation piping and appurtenances as necessary within area of work, unless noted otherwise to remain. Replace irrigation piping and appurtenances to irrigate new and/or existing landscaping. Contractor shall be responsible for temporary landscape irrigation until such time that irrigation system is restored and operational.

3.07 DISPOSAL

Demolished materials become property of the Contractor and shall be removed from premises, except those items specifically listed to be retained by Owner.

A. Dispose of all demolished material, trash, debris, and other materials not used in the work in accordance with the regulations of jurisdictional authority.

B. It is recommended that all materials that are of a recyclable nature, be transported to a suitable legal recycling facility instead of a dump or refuse facility (unless they are one-in-the same).

C. Burning and Burying of Materials: NOT ALLOWED.

D. Haul Routes:

1. Obtain permits as required by jurisdictional agencies. Establish haul routes in advance, post flagmen for the safety of the public and workmen.
2. Keep streets free of mud, rubbish, etc.; assume responsibility for damage resulting from hauling operations; hold Owner free of liability in connection therewith.

E. Remove demolished materials and debris from site on a daily basis.

3.08 CLEANING

A. Upon completion of work of this Section promptly remove from the working area all scraps, debris.

B. Clean excess material from surface of all remaining paved surfaces and utility structures.

C. Power wash all concrete surfaces to remove stains, dried mud, tire marks, and rust spots.

END OF SECTION

SECTION 03 30 53

MISCELLANEOUS CAST-IN-PLACE CONCRETE

PART 1 - GENERAL

1.01 SECTION INCLUDES

A. Cast-in-place concrete work including, but not limited to, the following:

1. Concrete materials and mixture design.
2. Formwork.
3. Reinforcement.
4. Placement procedures and finishes.

B. Accessories:

1. Expansion joints.

1.02 RELATED SECTIONS

A. Section 04 22 00 – Concrete Unit Masonry.

B. Section 31 00 00 – Earthwork.

C. Section 32 16 00 – Site Concrete.

D. Section 32 31 00 – Decorative Metal Anti-Climb Fencing and Gates.

E. Section 32 31 13 – Chain Link Fences.

F. Section 32 31 19 – Decorative Metal Fences.

G. Section 32 31 19.16 – Swinging Decorative Metal Gates.

1.03 REFERENCES

A. The publications listed below form a part of this Section to the extent referenced. The publications are referred to in the text by the basic designation only. Refer to Division 01 for definitions, acronyms, and abbreviations.

B. Standards, manuals, and codes refer to the latest edition of such standards, manuals, and codes in effect as of the date of issue of this Project Manual, unless indicated otherwise in CBC Chapter 35 and CFC Chapter 80.

C. ACI publications PRC-221, PRC-304, PRC-305, and PRC-306 contain recommended practices for concrete work. Submit any proposed deviations from these recommendations to Architect for review prior to commencing concrete work.

D. Referenced Standards:

1. AASHTO M182 – Standard Specification for Burlap Cloth Made from Jute or Kenaf and Cotton Mats.
2. ACI SPEC-117 – Specification for Tolerances for Concrete Construction and Materials.
3. ACI PRC-221 – Guide for Use of Normal Weight and Heavyweight Aggregates in Concrete.
4. ACI SPEC-301 – Specifications for Structural Concrete.
5. ACI PRC-304 – Guide for Measuring, Mixing, Transporting, and Placing Concrete.
6. ACI PRC-305 – Guide to Hot Weather Concreting.
7. ACI SPEC-305.1 – Standard Specification for Hot Weather Concreting.
8. ACI PRC-306 – Guide to Cold Weather Concreting.
9. ACI SPEC-306.1 – Standard Specification for Cold Weather Concreting.
10. ACI CODE-318 – Building Code Requirements for Structural Concrete and Commentary.
11. ACI PRC-347 – Guide to Formwork for Concrete.
12. ACI SP-66 – ACI Detailing Manual.
13. ASTM A615/A615M – Standard Specification for Deformed and Plain Carbon-Steel Bars for Concrete Reinforcement.
14. ASTM A706/A706M – Standard Specification for Low Alloy Steel Deformed and Plain Bars for Concrete Reinforcement.
15. ASTM A1064/A1064M – Standard Specification for Steel Wire and Welded Wire Reinforcement, Plain and Deformed, for Concrete
16. ASTM C31/C31M – Standard Practice for Making and Curing Concrete Test Specimens in the Field.
17. ASTM C33/C33M – Standard Specification for Concrete Aggregates.
18. ASTM C39/C39M – Standard Test Method for Compressive Strength of Cylindrical Concrete Specimens.
19. ASTM C94/C94M – Standard Specification for Ready-Mixed Concrete.
20. ASTM C109/C109M – Standard Test Method for Compressive Strength of Hydraulic Cement Mortars (Using 2-in. or [50-mm] Cube Specimens).
21. ASTM C114 – Standard Test Methods for Chemical Analysis of Hydraulic Cement.
22. ASTM C138/C138M – Standard Test Method for Density (Unit Weight), Yield, and Air Content (Gravimetric) of Concrete.
23. ASTM C143/C143M – Standard Test Method for Slump of Hydraulic Cement Concrete.
24. ASTM C150/C150M – Standard Specification for Portland Cement.
25. ASTM C157/C157M – Standard Test Method for Length Change of Hardened Hydraulic-Cement Mortar and Concrete.
26. ASTM C171 – Standard Specification for Sheet Materials for Curing Concrete.
27. ASTM C172/C172M – Standard Practice for Sampling Freshly Mixed Concrete.
28. ASTM C309 – Standard Specification for Liquid Membrane-Forming Compounds for Curing Concrete.
29. ASTM C494/C494M – Standard Specification for Chemical Admixtures for Concrete.
30. ASTM C595/C595M – Standard Specification for Blended Hydraulic Cements.
31. ASTM C618 – Standard Specification for Coal Fly Ash and Raw or Calcined Natural Pozzolan for Use in Concrete.
32. ASTM C881/C881M – Standard Specification for Epoxy Resin Base Bonding Systems for Concrete.

33. ASTM C928/C928M – Standard Specification for Packaged, Dry, Rapid Hardening Cementitious Materials for Concrete Repairs.
34. ASTM C939/C939M – Standard Test Method for Flow of Grout for Preplaced-Aggregate Concrete (Flow Cone Method).
35. ASTM C989/C989M – Standard Specification for Slag Cement for Use in Concrete and Mortars.
36. ASTM C1017/C1017M – Standard Specification for Chemical Admixtures for Use in Producing Flowing Concrete.
37. ASTM C1059/C1059M – Standard Specification for Latex Agents for Bonding Fresh to Hardened Concrete.
38. ASTM C1064/C1064M – Standard Test Method for Temperature of Freshly Mixed Hydraulic-Cement Concrete.
39. ASTM C1077 – Standard Practice for Agencies Testing Concrete and Concrete Aggregates for Use in Construction and Criteria for Testing Agency Evaluation.
40. ASTM C1107/C1107M – Standard Specification for Packaged Dry, Hydraulic Cement Grout (Nonshrink).
41. ASTM E329 – Standard Specification for Agencies Engaged in Construction Inspection, Testing, or Special Inspection.
42. Concrete Reinforcing Steel Institute (CRSI) – Manual of Standard Practice. 27th edition.
43. ISO/IEC 17025 – General Requirements for the Competence of Testing and Calibration Laboratories (formerly ISO/IEC Guide 25-1990 and ASTM E548).
44. NRMCA Quality Control Manual – Section 3, “Plant Certification Checklist.”

1.04 SUBMITTALS

A. General: Submit in accordance with Division 01.

B. Product Data: Submit manufacturer’s descriptive literature and product specification for each product. Include manufacturer’s written instructions and installation procedures.

C. Drawings: Submit concrete pouring plan showing proposed locations of construction and control joints for Architect’s review and acceptance, prior to concrete placement.

D. Design Mixtures: For each concrete mixture.

E. Certificates:

1. Manufacturer’s certification that materials (cementitious materials, aggregates, and admixtures) conform to Specifications.

F. Concrete Placement Record: Keep a record on site including time and date of concrete placing for each portion of the structure for the duration of the project. Record additional information not included in batch ticket such as admixtures added at the job site. Make records available to Architect and DSA for review. Submit record to Architect at project completion.

1.05 QUALITY ASSURANCE

A. Qualifications:

1. Concrete Supplier: Firm specializing in products specified in this Section with a minimum five years documented experience; successfully supplying similar materials (design, content, and performance) as specified in this Section.
2. Concrete Batch Plant: Complies with requirements of ASTM C94 and is currently certified per NRMCA Plant Certification Checklist – Section 3 or other certification acceptable to Architect and DSA.
3. Contractor's Design Laboratory: Under the direction of civil engineer licensed by the State of California; conforming to ASTM E329 and ASTM C1077.
4. Independent Testing Laboratory: Conforming to ASTM E329, ASTM C1077, and ISO/IEC 17025, acceptable to Architect and DSA.

B. Source Limitations: Obtain each type of cement of the same brand from the same manufacturer's plant, obtain aggregate from one source, and obtain admixtures through one source from a single manufacturer.

C. Product Substitutions: Comply with requirements of Division 01.

1.06 REGULATORY REQUIREMENTS

A. Structural Tests and Inspections: Refer to DSA Structural Tests and Inspection Sheet (Form DSA-103).

B. Regulatory Requirements: Conform to requirements of 2022 California Building Code (CBC), Chapter 19A, "Concrete", Chapter 17A "Special Inspections and Tests", and as follows:

1. Materials:

a. Cementitious Materials: CBC Chapter 19A, Section 1903A "Specifications for Tests and Materials" and Section 1910A.1 "Cementitious Material".
b. Batch Plant Inspection: CBC Section 1705A, Paragraph 1705A.3.3 "Batch Plant Inspection".

2. Inspection: CBC Chapter 17A, Section 1705A "Required Special Inspections and Tests" Article 1705A.3 "Concrete Construction", as applicable.

a. Batch Plant Weighmaster Inspection: CBC Section 1705A, Paragraph 1705A.3.3 "Batch Plant Inspection".

3. Formwork: Conform to ACI PRC-347 for design, fabrication, erection, and removal of forms.
4. Steel Reinforcement:

a. Perform work in accordance with CRSI Manual of Standard Practice; ACI SPEC-301; and 2022 California Building Code (CBC) Chapter 17A "Special Inspections and Tests", and Chapter 19A "Concrete", and as follows:

1) Steel Reinforcement, Tests and Materials: CBC Section 1903A "Specifications for Tests and Materials".
2) Anchorage: CBC Section 1905A.1.8.

3) Reinforcing Bar Welding: Per Section 1705A, Table 1705A.3 “Required Special Inspections and Tests of Concrete Construction” and Table 1705A.2.1 “Required Verification and Inspection of Steel Construction”, Item 5b.

b. Structural Testing for Seismic Resistance: Perform tests for seismic resistance as required by CBC Chapter 17A, Section 1705A.14 “Testing for Seismic Resistance” and Paragraph 1705A.14.1 “Structural Steel”.

C. Comply with ACI SPEC-301, "Specification for Structural Concrete", including the following sections, unless modified by requirements in the Contract Documents.

1. "General Requirements.”
2. "Formwork and Formwork Accessories.”
3. "Reinforcement and Reinforcement Supports.”
4. "Concrete Mixtures.”
5. "Handling, Placing, and Constructing.”

1.07 DELIVERY, STORAGE, AND HANDLING

A. Comply with requirements of Division 01.

B. Deliver products in manufacturer's original containers, dry and undamaged, with seals and labels intact.

C. Store cement and other cementitious materials in weathertight buildings, bins, or silos which exclude moisture and contaminants and keep building materials completely separated.

D. Arrange and use aggregate stockpiles in a manner to avoid excessive segregation and to prevent contamination with other materials or with other sizes of aggregates. Do not store aggregates directly on ground unless a sacrificial layer is left undisturbed.

E. Refer to manufacturers’ product data sheets for recommended shelf life and storage conditions for admixtures.

F. Clearly and accurately label materials after containers have been opened.

PART 2 - PRODUCTS

2.01 PRODUCTS AND MANUFACTURERS

A. Manufacturers and products specified in this Section are listed to establish minimum quality and performance requirements.

B. Substitutions: Comply with requirements of Division 01.

2.02 FORMWORK

A. Furnish formwork and formwork accessories according to ACI PRC-347.

2.03 STEEL REINFORCEMENT

A. Reinforcing Steel: ASTM A615/A615M, Grade 60, low-alloy deformed steel bars.

B. Reinforcing Steel Indicated to be Welded: ASTM A706/A706M, Grade 60, low-alloy deformed steel bars.

C. Deformed Steel Wire: ASTM A1064.

D. Welded Wire Fabric: ASTM A1064; 65 ksi minimum yield strength; fabricated from as-drawn steel wire into flat sheets (rolled fabric not permitted).

1. Size: 6 x 6 – W1.4 x W1.4.

E. Tie Wire: Black annealed steel wire; No. 16 gauge.

2.04 CONCRETE MATERIALS

A. Cementitious Materials:

1. Cement: ASTM C150, Type II, low alkali (equivalent alkalis (Na2O + 0.658K2O) no more than 0.6 percent per ASTM C114), gray.
2. Blended Cement: ASTM C595, Type IL.
3. Supplementary Cementitious Materials (SCM):

a. Fly Ash: ASTM C618, Class F. Class C is not permitted.
b. Slag Cement: ASTM C989, Grade 100 or Grade 120.

B. Aggregates: Aggregates used in concrete shall have a combined aggregate distribution similar to the aggregates used in the concrete represented by field test data or used in trial mixtures. Fine and coarse aggregates: ASTM C33. Low-shrinkage producing coarse aggregates per ACI 221R; manufactured from 100 percent crushed aggregates and uniformly graded as follows:

Sieve Number or Size in Inches	Percent Retained by Weight		
	1-1/2 inch Max.	1 inch Max.	3/4 inch Max.
2 inch	0-5	–	–
1-1/2 inch	0-8	0-5	–
1 inch	8-18	0-8	0-5
3/4 inch	8-18	8-18	0-8
1/2 inch	8-18	8-18	8-18
3/8 inch	8-18	8-18	8-18
No. 4	8-18	8-18	8-18
No. 8	8-18	8-18	8-18
No. 16	8-18	8-18	8-18
No. 30	8-18	8-18	8-18
No. 50	0-18	0-18	0-18
No. 100	0-8	0-8	0-8
No. 200	0-8	0-8	0-8

1. Maximum Nominal Size of Coarse Aggregate: CBC Section 1903A “Specifications for Tests and Materials,” and as follows:

    a. 1/5 the narrowest dimension between sides of forms,
    b. 1/3 depth of slab, or
    c. 3/4 the minimum clear spacing between individual reinforcing bars or wires, or bundles of bars.

2. Aggregate sources shall not contain any alkali-silica reactive material in accordance with ASTM C33, Appendix XI.

C. Water: Potable and complying with ASTM C94/C94M.

2.05 ADMIXTURES

A. General:

1. Manufacturer certified to contain chlorides.
2. Compatible with other admixtures and cementitious materials in the concrete mix.
3. Obtain Architect’s and DSA’s written acceptance prior to use of admixtures. Use admixtures according to manufacturer's written instructions.

B. Acceptable Manufacturers:

1. The Euclid Chemical Co., Cleveland, OH; 800-321-7628, www.euclidchemical.com.
2. Evonik Industries AG, Piscataway, NJ; 973-929-8000, corporate.evonik.com.
3. Master Builders Solutions, Cleveland, OH; 800-228-3318 or 800-433-9517, www.master-builders-solutions.com.
4. Sika Corporation, Lyndhurst, NJ; 800-933-7452, www.usa.sika.com.
5. US Spec, a Division of US Mix Products Co., Denver, CO; 800-397-9903, www.usspec.com.
6. W. R. Meadows, Inc., Hampshire, IL; 800-342-5976, www.wrmeadows.com.
7. Or accepted equal.

C. Chemical Admixtures:

1. Water-Reducing Admixture: ASTM C494/C494M, Type A.
2. Retarding Admixture: ASTM C494/C494M, Type B.
3. Set Accelerating: ASTM C494/C494M, Type C or Type E.
4. Water-Reducing and Retarding Admixture: ASTM C494/C494M, Type D.
5. High-Range, Water-Reducing Admixture: ASTM C494/C494M, Type F.
6. High-Range, Water-Reducing and Retarding Admixture: ASTM C494/C494M, Type G.
7. Plasticizing and Retarding Admixture: ASTM C1017/C1017M, Type II.
8. Shrinkage Reducing: ASTM C157/C157M.

2.06 CURING MATERIALS

A. General:

1. Comply with regulations of the California Air Resources Board and the local Air Pollution Control/Air Quality Management District. VOC limit: 350 g/L.

2. Verify compatibility with subsequent adhesives and coatings before application; furnish Manufacturer's certificate of compatibility. Coordinate with related Sections.

B. Evaporation Retarder: Waterborne, monomolecular film forming; manufactured for application to fresh concrete.

C. Absorptive Cover: AASHTO M182, Class 2, burlap cloth made from jute or kenaf, weighing approximately 9 ounces per square yard when dry.

D. Waterproof Sheet Materials for Curing: ASTM C171 and as follows:

1. Curing paper consisting of two sheets of kraft paper adhered together with a bituminous material with embedded cords or strands of fiber running in both directions not more than 1-1/4 inches apart.

a. Tensile strength in machine direction: Thirty foot-pounds per inch of width minimum.
b. Tensile strength in cross direction: Fifteen foot-pounds per inch of width minimum.

2. Polyethylene film: ASTM D4397; minimum six mil thickness.
3. White burlap-polyethylene sheeting: Consisting of burlap weighing not less than nine ounces per square yard extrusion coated on one side with at least four mil white opaque polyethylene sheet.

E. Water: Potable.

F. Curing Compound:

1. Water-emulsion, dissipating resin based; meets or exceed ASTM C309, Type 1, Class B.

a. Acceptable Products:

1) Kurez DR-100 by The Euclid Chemical Co.
2) 1100 by W. R. Meadows, Inc.
3) US SPEC Maxcure Resin Clear by US Spec.
4) Or accepted equal.

G. Surface Retarder: Water soluble liquid, formulated to retard wet surface of mortar in concrete.

1. Acceptable Products:

a. MasterFinish EA by Master Builders Solutions.
b. Formula F and Formula S by The Euclid Chemical Co.
c. Rugasol S by Sika Corp.
d. Or accepted equal.

2.07 GROUTING, BONDING, AND PATCHING MATERIALS

A. Grout:

1. Non-shrink Grout: ASTM C1107, non-metallic aggregate grout; 7000 psi minimum 28-day compressive strength at fluid water ratio per ASTM C939.

a. Acceptable Products:

1) SikaGrout-928 by Sika Corporation.
2) NS Grout, Hi-Flow Grout, or Euco Pre-Cast Grout by The Euclid Chemical Co.
3) US SPEC MP Grout by US Spec.
4) Or accepted equal.

2. Non-shrink Drypack Grout: Non-shrink, natural aggregates, 7000 psi minimum 28-day compressive strength.

a. Acceptable Products:

1) SikaGrout-100 GP by Sika Corporation.
2) Dry Pack Grout by The Euclid Chemical Co.
3) Pac-it Expansive Dry Pack Grout by W.R. Meadows, Inc.
4) Or accepted equal.

B. Bonding Materials:

1. Bonding Agent/Admixture:

a. Interior or exterior applications: Acrylic or SBR, latex cement bonding agent/admixture; non-re-emulsifiable; meets or exceeds ASTM C1059, Type II.

1) Acceptable Products:

a) Akkro-7T, Flex-Con, or SBR Latex by The Euclid Chemical Co.
b) US SPEC Acrylcoat by US Spec.
c) Sealtight Acry-Lok by W. R. Meadows, Inc.
d) SikaThoroseal Acryl 60 by Sika Corporation.
e) Or accepted equal.

b. Interior applications or exterior applications not subject to constant water immersions: Ethyl-vinyl acetate (EVA) copolymer liquid bonding agent and admixture; re-emulsifies once and will not re-wet; meets or exceeds ASTM C1059.

1) Acceptable Products:

a) Tammsweld by The Euclid Chemical Co.
b) US SPEC Multi-55 by US Spec.
c) Or accepted equal.

2. Structural Bonding Epoxy Adhesive: Two component, 100 percent solids, 100 percent reactive; meets or exceeds ASTM C881/C881M, Type V, Grade 2, Class B or Class C as appropriate.

a. Acceptable Products:

1) Sikadur 31 Hi-Mod Gel LPL or Sikadur 32 Hi-Mod by Sika Corporation.
2) Dural 452 MV by The Euclid Chemical Co.
3) Rezi-Weld 1000 by W. R. Meadows, Inc.

4) Or accepted equal.

C. Repair Mortar: Exceeds ASTM C928, R1 and R2; rapid setting – minimum 1300 psi at three hours; 5500 psi at seven days per ASTM C109.

1. Acceptable Products:

a. SikaEmaco-1060 or SikaEmaco-1061 by Sika Corporation.
b. Euco-Speed, Versaspeed series, or Speed Crete 2028 by The Euclid Chemical Co.
c. US SPEC Transpatch by US Spec.
d. Or accepted equal.

D. Repair Mortar (for patching over steel): Liquid polymer modified, containing and integral corrosion inhibitor, exceeds C928, R2; rapid setting – minimum 2500 psi at one day; 5000 psi at seven days per ASTM C109.

1. Acceptable Products:

a. SikaEmaco 423 RS or SikaEmaco 425 Gel Patch by Sika Corporation.
b. Concrete-Top Supreme by The Euclid Chemical Co.
c. US SPEC H2 by US Mix Products Co.
d. Sikatop-122 Plus by Sika Corp.
e. Or accepted equal.

2.08 ACCESSORIES

A. Form Release Agent: Commercially formulated form release agents that will not bond with, stain or adversely affect concrete surface, and will not impair subsequent treatment of concrete surfaces, nor impede the wetting of surfaces to be cured with water or curing compounds. Product shall meet the VOC requirements at the location of use.

1. Product: Duogard as manufactured by W.R. Meadows or accepted equal.

2.09 CONCRETE MIX

A. General:

1. Proportion concrete design mixes per ACI SPRC-301 Section 4.2.3 and ACI CODE-318 Section 26.4.3.
2. Proportion concrete design mixes per ACI, prepared and tested by an independent testing laboratory acceptable to Architect and DSA prior to design mix approval.
3. Proportioning without field experience or trial mixtures may be permitted with written approval from Architect and DSA, where concrete manufacturer can establish the uniformity of its production for concrete of similar type and strength based on recent test data in accordance with ACI CODE-318, Chapter 26, Article 26.4.4, “Documentation of Concrete Mixture Characteristics”.
4. Proportion concrete design mix to attain compressive strength as specified below and as needed, with early strength to meet Contractor’s work program.

B. Mix Designs:

MIX DESIGN TABLE

Location	Req'd SCM (% by weight of total cementitious materials, including blended cements)	Req'd early Compressive Strength (psi)	Req'd 28-day Compressive Strength (psi)	Air Content	Max. W/C Ratio	Max. Air-dry weight (lbs/ft^3)	ACI Exposure Class
General concrete	0 to 25	-	3000	None	0.50	145	F0, S0, P0, C1

1. Maximum Water Content: 300 pounds per cubic yard.

C. Admixtures: Use specified admixtures as acceptable to Architect and DSA. Verify compatibility of concrete admixtures when using multiple admixtures.

2.10 CONCRETE MIXING

A. Concrete shall be mixed per ACI PRC-304.

PART 3 - EXECUTION

3.01 EXAMINATION

A. Examine and verify the following prior to concrete placement.

1. Forms are erected, adequately braced, sealed, lubricated (if required), and bulkhead provided where placing is to stop.
2. Thoroughly water soak wood forms other than plywood at least twelve hours before concrete placement.
3. Steel reinforcement are accurately positioned, securely tied and braced. Verify concrete cover requirements.
4. Coordination with related work is completed.
5. Anchors and embedded items are in position, securely held and braced.
6. Construction joints and previously placed concrete are prepared as specified.
7. Compliance with cold-weather or hot-weather requirements.
8. Compliance with cleaning and preparation requirements.

B. Report unacceptable conditions to Architect. Begin installation only when unacceptable conditions have been corrected.

C. Concrete formwork, reinforcement, inserts, and embedded items are subject to Architect's acceptance. Notify Architect at least 48 hours prior to concrete placement.

3.02 PREPARATION

A. Cleaning: Clean forms and adjacent surfaces to receive concrete. Remove chips, wood, sawdust, dirt and other debris before placing concrete.

3.03 FORMWORK

A. Design, construct, erect, brace, and maintain formwork according to ACI PRC-347.

B. Apply form release agent on formwork in accordance with manufacturer's recommendations.

3.04 STEEL REINFORCEMENT

A. Fabricate to shapes, dimensions, and tolerances in accordance with accepted placement drawings conforming to CRSI Manual of Standard Practice, ACI MNL-66, ACI CODE-318, ACI SPEC-117, and CBC Chapter 19A.

B. Standard Hooks and Bends: Conform to ACI 318/318R.

C. Bending: Cold bend steel reinforcement in the field or at the mill. Heating for bending is not permitted unless otherwise specifically allowed by Architect and DSA.

D. Reinforcement must not be straightened or re-bent without approval of Structural Engineer of Record (SEOR) and DSA.

E. Weld steel reinforcement in accordance with AWS D1.4.

F. Place steel reinforcement in accordance with accepted placement drawings in conformance with tolerances specified in ACI SPEC-117.

G. Install steel reinforcement in largest practical lengths. Accurately position, support, and secure reinforcement against displacement. Locate support reinforcement with bar supports to maintain minimum concrete cover.

H. Tie all splices and crossing points. Point wire tie ends away from the form.

I. Offset laps in adjacent bars.

3.05 CONCRETE PLACEMENT

A. Place concrete in accordance with ACI SPEC-301 and as specified in this Section.

B. Do not add water to concrete during delivery, at Project site, or during placement.

C. Consolidation: Consolidate placed concrete with mechanical vibrating equipment per ACI SPEC-301.

1. Concrete Floors and Slabs: Deposit and consolidate concrete for floors and slabs in a continuous operation within limits of construction joints until placement of a panel or section is complete.
2. Consolidate concrete during placement so concrete is thoroughly worked around reinforcement and other embedded items and into corners.
3. Limit vibration duration to time necessary to consolidate concrete and complete embedment of reinforcement and other embedded items without causing mix to segregate.
4. Maintain reinforcement in position on chairs during concrete placement.

D. Hot Weather Concreting: Place concrete according to ACI SPEC-305.1.

E. Cold Weather Concreting: Place concrete according to ACI SPEC-306.1.

3.06 JOINTS

A. General: Construct joints true to line with faces perpendicular to surface plane of concrete, unless otherwise indicated on Drawings.

B. Construction Joints: Locate and install joints as indicated on Drawings or as accepted by Architect, and in a manner that strength and appearance of concrete are not impaired.

1. Comply with ACI CODE-318, Chapter 26.
2. Place joints perpendicular to main reinforcement. Continue reinforcement across construction joints unless otherwise indicated.
3. Expose concrete aggregates, a minimum of 1/4 inch depth, creating a rough surface using a surface retardant. Within 24 hours after placing concrete, remove retarded surface mortar using either high pressure water jetting or stiff brushing or a combination of both to expose coarse aggregate. A rough surface of exposed aggregate may also be produced by sandblasting followed by high pressure water jetting.
4. Where new concrete joins existing concrete (concrete more than sixty days old), clean and roughen existing concrete to expose coarse aggregate. Coat with epoxy bonding compound prior to placing new concrete.

3.07 FORMED SURFACES FINISHING

A. Leave texture imparted on formed concrete surface, unless otherwise specified, except that defective surfaces shall be repaired. Repair defective concrete as specified in this Section.

B. Maintain uniform color of the concrete, unless painting of surfaces is required, by using only one mixture without changes in material or proportions for any structure or portion of structure exposed to public view.

3.08 CURING AND PROTECTION

A. Protect freshly placed concrete from premature drying, rapid temperature change, mechanical injury, and injury from flowing water for a curing period not less than seven days. Comply with ACI SPEC-306.1 for cold-weather protection and ACI SPEC-305.1 for hot-weather protection during curing.

B. Curing Methods:

1. Curing Compound: Apply uniformly in continuous operation by power spray or roller according to manufacturer’s written instructions. Recoat areas subjected to heavy rainfall within three hours after initial application. Maintain continuity of coating and repair damage during curing period.

a. If curing compound is applied using a hand held, pump-up sprayer, it shall be back-rolled using a short nap roller.

2. Moist Curing: Keep surfaces in a moist condition for not less than seven days using water saturated absorptive cover (burlap-polyethylene sheeting) kept wet continuously. Cover concrete completely in widest practicable width, with sides and ends lapped at least 12 inches, and sealed with waterproof tape or adhesive. Immediately repair and maintain rips and tears and keep traffic away from surface during curing period.
3. Ponding or Immersion: Continuously immerse concrete throughout the curing period in water not more than twenty degrees below the temperature of the concrete.

C. Concrete in Forms: Keep forms and exposed concrete surfaces covered and continuously moist. Provide soaker hoses at top of walls or other accepted means of keeping concrete and forms wet while forms remain in place. If forms are removed before end of curing period, continue curing by methods described in this Section.

D. Protection:

1. Protect concrete surfaces from damage by tools, equipment, materials, and construction activity.
2. Traffic, shoring, or loading will not be permitted on concrete surface until it has sufficiently hardened to prevent injury to finish and strength.

3.09 REMOVAL OF FORMS

A. Formwork for sides of curbs, walls, and similar parts of the Work that does not support weight of concrete may be removed after cumulatively curing at not less than 50 degrees F for 48 hours after placing concrete provided concrete is hard enough not to be damaged by form-removal operations and provided curing and protection operations are maintained.

3.10 CONCRETE REPAIRS

A. General: Comply with ACI SPEC-301, as follows:

1. Completed concrete work shall conform to applicable requirements of this Section and Contract Documents.
2. Concrete work that fails to meet one or more requirements of the Contract Documents but subsequently is repaired to bring the concrete into compliance will be acceptable.
3. Concrete work that fails to meet one or more requirements of the Contract Documents and cannot be brought into compliance with the Contract Documents is subject to rejection.
4. Repair rejected concrete work by removing and replacing or by additional construction to strengthen or otherwise satisfy project requirements as directed by Architect. To bring rejected Work into compliance, use repair methods that meet applicable requirements for function, durability, dimensional tolerances, and appearance as determined by Architect.
5. Submit proposed repair methods, materials, and modifications needed to repair concrete work to meet the requirements of the Contract Documents.
6. Contractor shall be responsible to bring concrete work into compliance with requirements of Contract Documents.

B. Defective Concrete: Repair and patch defective concrete work and concrete not conforming to required lines, details, and elevations. Use materials and methods specified in this Section as accepted by Architect. Serious defects, defects affecting structural strength, or unsatisfactory patching may be cause for complete removal and replacement of concrete.

C. Repairing Formed Surfaces: Surface defects include color and texture irregularities, cracks, spalls, air bubbles, honeycombs, rock pockets, fins and other projections on the surface stains and other discolorations that cannot be removed by cleaning.

1. Immediately after form removal, cut out honeycomb, rock pockets, and voids more than 1/2 inch in any direction in solid concrete. Make edges of cuts perpendicular to concrete surface. Clean, dampen with water, and brush-coat holes and voids with bonding agent. Fill and compact with drypack grout before bonding agent has dried.
2. Repair defects on surfaces exposed to view by blending white Portland cement and standard Portland cement so that, when dry, repair mortar will match surrounding color. Patch a test area at inconspicuous location to verify mixture and color match before proceeding with patching. Compact mortar in place and strike off slightly higher than surrounding surface.
3. Repair defects on concealed, formed surfaces that affect concrete's durability and structural performance as determined by Architect and DSA.

D. Repairing Unformed Surfaces: Test unformed surfaces, such as floors and slabs, for finish and verify tolerances specified for each surface. Correct low and high areas. Test surfaces sloped to drain for trueness of slope and smoothness.

1. Repair defective finished surfaces including spalls, popouts, honeycombs, rock pockets, crazing and cracks in excess of 0.01 inch wide or that penetrate to reinforcement or completely through unreinforced section regardless of width, and other objectionable conditions.
2. After concrete has cured fourteen days, correct high spots by grinding.
3. Correct localized low areas during or immediately after completing surface finishing operations by cutting out low areas and replacing with patching mortar. Finish areas to blend into adjacent concrete.
4. Repair defective areas, except random cracks and single holes 1 inch or less in diameter, by cutting out and replacing with fresh concrete. Remove defective areas with clean, square cuts and expose steel reinforcement with at least 3/4 inch clearance all around. Dampen concrete surface in contact with patching concrete and apply bonding agent. Mix patching concrete of same materials and mix as original concrete. Place, compact, and finish patching concrete to blend with adjacent finished concrete.
5. Repair random cracks and single holes 1 inch or less in diameter with drypack grout. Groove top of cracks and cut out holes to sound concrete and clean off dust, dirt, and loose particles. Dampen cleaned concrete surfaces and apply bonding agent. Place drypack grout before bonding agent has dried. Compact and finish patching material to match adjacent concrete.

E. Moist cure patches and repairs for at least 72 hours.

F. Perform concrete structural repairs subject to Architect's and DSA's acceptance.

3.11 FIELD QUALITY CONTROL

A. General: Comply with requirements of Division 01.

B. Testing Service: Owner will select and pay for independent testing agency.

C. Strength Test Specimen Cylinders: Conduct sampling, curing, and testing per ASTM C172, ASTM C31/C31M, and ASTM C39/C39M. Contractor shall provide molds required for strength test cylinders. Test samples shall be taken at the point of concrete placement.

1. Frequency: Samples for strength tests of each class of concrete placed each day shall be taken not less than once a day, nor less than once for each 50 cubic yards of concrete, nor less than once for each 2000 square feet of surface area for slabs or walls. Additional samples for seven-day compressive strength tests shall be taken for each class of concrete at the beginning of the concrete work or whenever the mix or aggregate is changed.
2. A strength test shall be the average of the strengths of at least two 6 inch by 12 inch cylinders or at least three 4 inch by 8 inch cylinders made from the same sample of concrete and tested at the test age designated for the determination of concrete compressive strength.
3. Cylinder Label and Records: Mark and date each test cylinder. Maintain records of test specimen cylinders and send copies to Architect, Structural Engineer, DSA, Project Inspector, and Owner. Record the following information:

   a. Cylinder identification mark.
   b. Date made.
   c. Concrete supplier.
   d. Slump.
   e. Specified concrete design strength.
   f. Pour location and type of structural member.
   g. Compressive strength test date and age.
   h. Admixtures added to concrete mix.

4. Compressive Strength Tests: Test laboratory cured specimens at the following ages and report compressive strengths as follows:

   a. 7 days at the start of use of each class of concrete or change in mix or aggregates.
   b. Where early compressive strength test is required prior to loading.
   c. 28 days compressive strength test.
   d. Hold one cylinder for compressive strength test in reserve.

5. Test Reports: Furnish two copies of test reports directly from testing agency to Contractor, Architect, Structural Engineer, DSA, Project Inspector, and Owner.

D. Slump Test: ASTM C143/C143M. Conduct slump testing when test cylinders are made and additionally for every 150 cubic yards of concrete. Perform additional tests when concrete consistency appears to change. Slump not meeting slump in accepted mix design (± one inch) will be rejected. Contractor shall provide slump cones.

E. Density: ASTM C138/C138M. Conduct density testing when test cylinders are made.

F. Concrete temperature: ASTM C1064/C1064M. Check concrete temperature when test cylinders are made and every hour when ambient temperature in below 40 degrees F or above 90 degrees F.

G. In the event the cylinders tested do not meet the required concrete design strength, conduct core tests and additional tests or inspections as may be required by Architect to ascertain strength of placed concrete. Costs for additional tests and inspections shall be borne by Contractor.

END OF SECTION

Concrete Mixture Design Submittal Checklist

- ☐ Specify Use: All mix designs must clearly note the concrete type or use. (i.e. footings, slab on grade, site concrete)
- ☐ Mix Design: Provide concrete mixture designs with proportions and characteristics including all admixtures.
- ☐ Gradation: Provide combined aggregate gradation by weight for all course and fine aggregates.
- ☐ Weight: Provide dry unit weight of mix. Normal weight concrete shall be limited to 145 PCF.
- ☐ Material Certificates: Provide supplier's certification that materials conform to specifications. This includes aggregates, admixtures, and cementitious materials such as cement, fly ash, silica fume, slag cement, and metakaolin.
- ☐ Product Data: Provide product literature for each product and admixture used. Include manufacturer's specification, written instructions, and installation procedures.
- ☐ Required SCM: Mix design must contain the percentage or supplementary cementitious materials noted in mix design table of the specifications.
- ☐ Admixtures: Where multiple admixtures are used, provide a letter from all manufacturers indicating there are no compatibility problems or adverse effects resulting from combination of products.
- ☐ Testing / Proportion Method: Concrete must be proportioned per the requirements of ACI Spec-318-20. Indicated method used and provide complete test data and documentation for the chosen proportion method.

SECTION 04 22 00

CONCRETE UNIT MASONRY

PART 1 - GENERAL

1.01 SECTION INCLUDES

A. Concrete masonry units (CMU).

B. Reinforcement.

C. Accessory items.

1.02 RELATED SECTIONS

A. Section 03 30 53 – Miscellaneous Cast-In-Place Concrete.

B. Section 07 19 19 – Silicone Water Repellents.

1.03 REFERENCES

A. The publications listed below form a part of this Section to the extent referenced. The publications are referred to in the text by the basic designation only. Refer to Division 01 for definitions, acronyms, and abbreviations.

B. Standards, manuals, and codes refer to the latest edition of such standards, manuals, and codes in effect as of the date of issue of this Project Manual, unless indicated otherwise in CBC Chapter 35 and CFC Chapter 80.

C. Referenced Standards:

1. ACI 315 – Details and Detailing of Concrete Reinforcement.
2. ASTM C5 – Standard Specification for Quicklime for Structural Purposes.
3. ASTM C90 – Standard Specification for Loadbearing Concrete Masonry Units.
4. ASTM C94/C94M – Standard Specification for Ready Mixed Concrete.
5. ASTM C140 – Standard Test Methods for Sampling and Testing Concrete Masonry Units and Related Units.
6. ASTM C144 – Standard Specification for Aggregate for Masonry Mortar.
7. ASTM C207 – Standard Specification for Hydrated Lime for Masonry Purposes.
8. ASTM C270 – Standard Specification for Mortar for Unit Masonry.
9. ASTM C404 – Standard Specification for Aggregates for Masonry Grout.
10. ASTM C476 – Standard Specification for Grout for Masonry.
11. ASTM C881 – Standard Specification for Epoxy-Resin-Base Bonding Systems for Concrete.
12. ASTM C1019 – Standard Test Method for Sampling and Testing Grout.
13. ASTM D1056 – Standard Specification for Flexible Cellular Materials Sponge or Expanded Rubber.
14. TMS 402 – Building Code Requirements for Masonry Structures.
15. TMS 602 – Specification for Masonry Structures.

1.04 SUBMITTALS

A. Submit under provisions of Division 01.

B. Shop Drawings indicating bar sizes, spacings and locations of reinforcing steel, including reinforcing steel at door, window, and utility openings, bending and cutting schedules, supporting and spacing devices, and location/layout and details of each joint type.

C. Product Data: Submit product data for each product specified in this Section with the product and selected attributes clearly identified.

D. Certified Mix Design for block, grout, and mortar: Include results of testing or test data when used to establish mix proportions for grout.

E. Certificate of conformance stating that masonry units meet or exceed applicable ASTM specifications referenced in this Section.

F. Two full size samples of each type of masonry unit specified, in selected color[s].

1.05 QUALITY ASSURANCE

A. Requirements of Regulatory Agencies: The masonry work shall comply with the requirements of this Section and, in addition, shall conform to the applicable requirements of TMS 402 and TMS 602, 2022 California Building Code (CBC), Chapter 17A “Special Inspections and Tests”, Chapter 19A “Concrete”, and Chapter 21A “Masonry”.

1. Inspection:

a. Masonry Construction: Per Section 1705A “Required Special Inspections and Tests”, Article 1705A.4 “Masonry Construction”.
b. Reinforcing Bar Welding: Per Section 1705A, Table 1705A.3 “Required Special Inspections and Tests of Concrete Construction” and Table 1705A.2.1 “Required Special Inspections and Tests of Steel Construction”, Item 5b.

2. Field Tests:

a. Mortar and Grout Tests: Per Section 2105A.3 “Mortar and Grout Tests”.
b. Masonry Core Testing: Per Section 2105A.4 “Masonry Core Testing”.

B. Single Source Responsibility for Masonry Units: Obtain masonry units of uniform texture and color, or a uniform blend within the ranges accepted for these characteristics, from one manufacturer for each different product required for each continuous surface or visually related surfaces.

C. Single Source Responsibility for Mortar Materials: Obtain mortar ingredients of uniform quality including color[s] for exposed masonry, from one manufacturer for each cementitious component and from one source and producer for each aggregate. One cement type shall be used for all mortar throughout the project.

D. Pre-Installation Meetings:

1. Conduct pre-installation meeting in accordance with provisions of Division 01.
2. Convene pre-installation meeting prior to commencing work of this Section.
3. Take minutes of meeting. Distribute to all attendees and concerned parties within five days.

1.06 DEFINITIONS

A. Grout Lift: The increment of height to which grout is placed into masonry in one continuous operation within a total grout pour.

B. Grout Pour: The total height of masonry to be grouted prior to the erection of additional masonry. A grout pour consists of one or more grout lifts.

C. High-Lift Grouting: Grout pour full height of construction between horizontal cold joints using multiple grout lifts.

D. Low-Lift Grouting: Units laid and grouted to a maximum height of four feet-zero inches prior to the erection of additional masonry.

1.07 TESTS AND INSPECTIONS

A. Tests requested by Architect shall be made by a testing laboratory selected and paid for by Owner. Any masonry work failing to meet required design stresses as specified hereinafter shall be dismantled and replaced at no cost to Owner.

1. Tests requested by Contractor to establish design stresses when tests made by the Testing Laboratory indicate defective masonry shall be paid for by Contractor.

B. Inspection: Approval of the reinforcing steel after installation must be received from Architect and Special Inspector. Architect and Special Inspector shall be notified at least 48 hours in advance of the beginning of grouting operations.

1.08 DELIVERY, STORAGE AND HANDLING

A. Deliver products to site under provisions of Division 01.

B. Unload masonry units carefully and store on raised platform. Masonry units shall be maintained under waterproof cover protected from weather.

C. Protect cementitious materials against exposure to moisture. Store cementitious materials off the ground, under cover, and in a dry location. Use of cementitious or other materials that have become caked and hardened from absorption of moisture will not be permitted.

D. Store and protect aggregates where grading and other required characteristics can be maintained.

E. Store and protect masonry accessories including metal items to prevent deterioration by corrosion and accumulation of dirt.

1.09 JOB AND ENVIRONMENTAL CONDITIONS

A. Environmental:

1. Cold Weather Conditions: Do not place unit masonry when temperature is below 40 degrees F unless Architect accepts and Contractor provides means for preventing damage from freezing before and after placement.
2. Hot Weather Conditions: Protect masonry construction from direct exposure to wind and sun when erected; with an ambient air temperature of 99 degrees F in the shade with relative humidity less than fifty percent.

B. Protect all construction from droppings of mortar.

PART 2 - PRODUCTS

2.01 MANUFACTURERS AND PRODUCTS

A. Acceptable Manufacturers, Concrete Masonry Units (CMU):

1. Basalite Concrete Products, Dixon, CA; 707-678-1901, www.basalite.com.
2. Calstone Company, Sunnyvale, CA; 408-984-8800, www.calstone.com.
3. Angelus Block Co., Inc., Sun Valley, CA; 818-767-8576, www.angelusblock.com.

B. Substitutions: Under provisions of Division 01.

2.02 CONCRETE MASONRY UNITS

A. Hollow Load Bearing Units: ASTM C90, maximum oven dry density of 135 pounds per cubic foot, 2000 pounds per square inch minimum compressive strength. Provide open and closed-end units, bond beams, U beams, half units and any additional special shapes and sizes as required to complete the Work. Units shall be of the following types:

1. Standard:

a. Precision smooth finish, sizes as indicated on Drawings; colors as selected by Architect.

1) 2 inch solid cap block.

2.03 MORTAR AND GROUT

A. Portland Cement: ASTM C150, Type I, except use Type III for construction below 40 degrees F. Provide natural color or white cement as required to produce required mortar color. Masonry cement will not be permitted.

B. Aggregate:

1. For Mortar: ASTM C144.
2. For Grout: ASTM C404.

C. Hydrated Lime: Type S, ASTM C207.

D. Quick Lime: ASTM C5.

E. Water: Clean and potable, free from impurities detrimental to mortar and grout.

F. Admixtures:

1. Unless otherwise specified, use admixtures only with Architect's and DSA's acceptance and without adversely affecting bond or compressive strength.
2. Grout Additive: Grout pours greater than four feet-zero inches shall contain Grout Aid by Sika Chemical Corporation or PMP Grout Additive by E-Z Mix, Inc.

a. Mix grout additive as recommended by manufacturer.

G. Color of mortar as selected by Architect.

2.04 REINFORCEMENT, ACCESSORIES, AND RELATED ITEMS

A. Steel reinforcement including anchors, ties and accessories: shall conform to CBC Section 2103A.4 "Metal Reinforcement and Accessories."

B. Reinforcing Steel: Same type and quality specified for concrete reinforcing, Section 03 20 00.

C. Wire Ties: No. 16 annealed wire for tying reinforcing steel.

D. Bonding Agent: MasterEmaco ADH 326 two-component 100 percent solids liquid epoxy bonding adhesive in compliance with ASTM C881, Type II, Grade 2, Class C as manufactured by Master Builders Solutions, or accepted equal.

E. Control Joints: Closed cell neoprene rubber conforming to ASTM D1056, Grade 2A1. 3/8 inch thick by 6 inches wide. Product: NS Closed Cell Neoprene Sponge as manufactured by Hohmann & Barnard, Inc., Hauppauge, NY; 800-645-0616, www.h-b.com, or accepted equal.

F. Weep Holes: Where weep holes are required, provide medium density polyethylene plastic tubing in lengths and diameter as indicated on Drawings.

2.05 MIXES AND MIXING

A. Mortar:

1. Meet the requirements of CBC Section 2103A.2 and ASTM C270 Type S. Mix designs shall meet one of the following criteria:

a. Conform to the type and proportions of ingredients in compliance with the Proportion Specification of ASTM C270.
b. Conform to mix design and mortar tests performed in accordance with the Property Specification of ASTM C270.

2. Mortar shall be mixed as follows, with a total mixing time not less than ten minutes.

a. Place approximately half of required water and sand into mixer while running.

b. Add cement and remainder of sand and water into mixer in that order and mix for a period of at least two minutes.
c. Add lime and continue mixing as long as needed to secure a uniform mass.

3. Use and place mortar in final position within 2-1/2 hours after mixing. Mortars that have stiffened due to evaporation of water may be re-tempered with water as necessary to restore required consistency during that time period.

B. Grout:

1. Grout shall conform to the requirements of TMS 602 and shall be a coarse grout designed to attain a compressive strength of not less than 2,000 psi at 28 days.
2. Proportions: Grout shall be proportioned as specified by one of the following methods:

a. Based on proportions specified in ASTM C476.
b. Based on laboratory or field experience with the grout ingredients and the masonry units to be used.

1) For coarse grout, the coarse and fine aggregates shall be combined such that the fine aggregate part is not greater than 80 percent of the total aggregate weight (mass). Coarse grout proportioned by weight shall contain not less than 564 pounds of cementitious material per cubic yard.
2) If this method is selected, Contractor shall submit documented history of grout mix design and results of test data used to establish mix proportions from no less than ten different recent projects.
3) Compressive strength shall be determined in accordance with ASTM C1019.

3. Aggregate for grout shall conform to the requirements set forth in ASTM C404, Aggregates for Grout. Coarse grout shall be used in grout spaces 2 inches or more in width and in all filled-cell masonry construction.
4. Materials for grout shall be measured in suitable calibrated devices. After the addition of water, all materials shall be mixed for at least three minutes in a drum type batch mixer. Mixing equipment and procedures shall produce grout with the uniformity required for concrete by ASTM C94.
5. Grout consistency at time of placement shall enable full grouting of all spaces scheduled to receive grout.

2.06 SOURCE QUALITY CONTROL

A. Where required by governing code, Owner's Testing Agency will:

1. Select masonry units by random sampling at the plant and test units for strength, absorption, and moisture content in accordance with ASTM C140; report strengths based on net area.
2. Review mix designs for mortar and grout.
3. Review certificates of compliance for materials. Sample and test where non-conformance is suspected.
4. Perform masonry and grout tests.

PART 3 - EXECUTION

3.01 EXAMINATION

A. Examine areas to receive masonry and verify following:

1. That foundation surface is level to permit bed joint with range of 1/4 inch to 1-1/4 inch.
2. That edge is true to line to permit protection of masonry to less than 1/4 inch.
3. That projecting dowels are free from loose scale, dirt, concrete, or other bond-inhibiting substances and properly located.

B. Do not begin work before unsatisfactory conditions have been corrected.

3.02 PREPARATION

A. Clean concrete surfaces to receive masonry. Remove laitance or other foreign material lodged in surfaces by sandblasting or other means as required.

B. Ensure masonry units are clean and free from dust, dirt, or other foreign materials before laying the units.

C. Establish lines, levels, and coursing. Protect from disturbances.

D. Provide temporary bracing during erection of masonry work. Maintain in place until masonry has set to provide permanent bracing.

3.03 COURSING

A. Install unit masonry work in accordance with CBC Chapter 21A.

B. Place unit masonry to lines and levels indicated to the following tolerances, as well as tolerances indicated in TMS 602:

1. Variation from unit to adjacent unit: 1/8 inch maximum.
2. Variation from plane to wall: ±1/4 inch in 10 feet; ±3/8 inch in 20 feet; ±1/2 inch maximum.
3. Variation from plumb: ±1/4 inch in 10 feet; ±3/8 inch in 20 feet; ±1/2 inch maximum.
4. Variation of level coursing: 1/4 inch in 10 feet; 1/2 inch maximum.
5. Variation of joint thickness: ±1/8 inch.

C. Bond:

1. Use running bond typical unless otherwise noted. Lay concrete masonry units with vertical joints located at center of unit in course below.
2. Use stack bond where noted or indicated on Drawings. Lay concrete masonry units with vertical joints aligned with joints in course below. Where stack bond is used, all concrete masonry units shall be double open-end units so that all head joints are made solid. All units shall be bond beam units to facilitate the flow of grout.

D. Maintain masonry courses to uniform width. Make vertical and horizontal joints equal and of uniform thickness.

E. Preserve the vertical continuity of cells in concrete unit masonry. The minimum clear horizontal dimensions of vertical cores shall be 3 inches by 3 inches for an 8-inch wide block.

3.04 PLACING AND BONDING

A. Do not install concrete masonry units which are wet, cracked, broken, or chipped beyond ASTM C90 finish and appearance tolerances.

B. Lay only dry concrete masonry units.

C. Perform jobsite cutting with proper tools to provide straight unchipped edges. Take care to prevent breaking masonry unit corners or edges.

D. Lay units with bed and head joints filled from the faces of the units to a distance in not less than the thickness of the face shell.

1. Webs shall be fully mortared in all courses of piers, columns, and pilasters, and when necessary to confine grout or insulation.
2. Vertical cells to be grouted shall be aligned and have unobstructed openings for grout.
3. Buttering of joint corners and deep or excessive furrowing of mortar joints is not permitted.

E. Keep cavity airspace and weep holes clean of mortar. Clean out promptly if mortar falls into cavity airspace or plugs weep holes.

F. In-Progress Cleaning:

1. Remove excess mortar.
2. Dry brush exposed masonry prior to the end of each workday.
3. Protect wall from mud splatter and mortar droppings.

a. Set scaffolds and scaffold boards so that mortar is not deflected onto masonry.
b. At the end of each workday, turn scaffold boards so that rainwater is not deflected onto masonry.

4. Place concrete masonry units such that mortar does not run down the face of the wall or smear the masonry face.

G. Adjustments:

1. Do not shift or tap concrete masonry units after mortar has taken initial set.
2. If adjustment is required, remove unit and mortar in its entirety and replace.

H. After joints are tooled, cut off mortar tailings with trowel and dry brush excess mortar burrs and dust from the face of the masonry.

I. Fully bond interior and exterior corners and properly anchor intersecting walls.

3.05 JOINTS

A. Horizontal and vertical joints at masonry units shall be as specified herein and concrete unit masonry joints shall be 3/8-inch wide and as follows:

1. Point joint tight in masonry below ground.
2. All end joints shall be fully filled with mortar and joints squeezed tight. Slushing of mortar into joints shall not be permitted. Mortar in bed joints shall be held back approximately 1/2 inch from cell to provide positive bond with grout.
3. Exposed Joints:

   a. At all exposed surfaces of concrete masonry units facing the school building, horizontal joints shall be weathered and vertical joints shall be concave, unless noted otherwise.
   b. At all exterior surfaces of concrete masonry units facing away from the school building, vertical and horizontal joints shall be concave, unless noted otherwise.

4. Tool vertical joints first.
5. Weathered joints shall be formed by striking the mortar flush, and after partial set tooled with a tool sufficient to provide a uniform joint, free of waves, with consistent slope. Tool joint to a depth which ensures that joint is not raked free of mortar.
6. Concave joints shall be formed by striking the mortar flush, and after partial set tooled with a tool of sufficient length to provide a uniform joint, free of waves. Tool shall be of a diameter to provide a joint that is as close to flush as possible. Use tool with large enough radius that joint is not raked free of mortar.

3.06 MASONRY REINFORCEMENT

A. Place reinforcement in accordance with ACI 315, to the tolerance specified in Drawings.

B. Reinforcing steel shall not be bent or straightened in a manner that will injure the material. Bars with kinks or bends not shown on the plans shall not be used. Heating of bars for bending will not be permitted.

1. Bars shall conform accurately to the sizes, shapes, lines and dimensions shown on Drawings and with hooks and bends made as detailed. Bars shall be placed as indicated on Drawings and centered on grout space.
2. At the time grout is placed around it, reinforcing steel shall be clean of mill scale or other coatings that will destroy or reduce bond.
3. All vertical reinforcing steel shall be installed in one piece, full height of wall, and braced throughout its height in a manner that will retain the steel in proper position and provide the proper clearance.

3.07 GROUTING

A. General Requirements:

1. All cells shall be grouted solid.
2. Use grout pump, hopper, or bucket to place grout.
3. Place grout in final position within 1-1/2 hours after introduction of mixing water.

a. Place grout and rod with a 3/4-inch flexible cable vibrator sufficiently to cause it to flow into all voids between the cells and around the reinforcing steel. Slushing with mortar will not be permitted.
b. Do not insert vibrators into lower pours that are in a semi-solidified state.

4. Stop grout approximately 1-1/2 inches below top of last course; except at top course bring grout to top of wall. Where bond beams occur, stop grout pour a minimum of 1/2 inch below the top of the masonry.
5. Prior to grouting, the grout space shall be cleaned so that all spaces to be filled with grout do not contain mortar projections greater than 1/2 inch, mortar droppings or other foreign material.
6. The grouting of any section of wall shall be completed in one day with no interruptions greater than one hour.

B. High-Lift Grouting:

1. For bidding purposes, high-lift grouting shall not be anticipated. High-lift grouting may be considered at select locations only when specifically reviewed and accepted by Architect.
2. Where high lift grouting is used, the method shall conform to DSA IR 21-2.
3. Maximum grout pour height, comprised of multiple four feet-zero inch maximum grout lifts:

a. 12 feet-0 inches for 8 inch wide CMU.

4. Cleanouts are required when high-lift grouting method is used. Cleanouts shall be provided in the bottom course at every vertical rebar. Cleanouts shall be located on concealed faces of wall and shall be sealed after inspection and before grouting. Cleanouts will not be allowed on exposed faces of wall.

C. Low-Lift Grouting:

1. Units shall be laid to a maximum height of four feet-zero inches before grouting, and all over-hanging mortar and mortar droppings shall be removed.
2. Grouting shall follow each four feet-zero inches height of construction laid, and shall be consolidated so as to completely fill all voids and embed all reinforcing steel.

3.08 CONTROL JOINTS

A. Install control joints in continuous lengths as shown on Drawings.

B. Size joints in accordance with manufacturer's recommendations for sealant performance.

C. Install backer rod and sealant under provisions of Section 07 90 00.

D. Install preformed control joint filler at locations indicated on drawings.

E. Use proper size material to create sealant joint specs.

3.09 EXPANSION JOINTS

A. Install expansion joint filler material on centerline of wall at locations indicated on Drawings.

B. Install backer rod and sealant under provisions of Section 07 90 00.

3.10 BOND BEAMS

A. Bond beams shall be located where shown and detailed on Drawings, and shall be reinforced as indicated and as hereinafter specified.

3.11 BUILT-IN WORK

A. Miscellaneous Embedded Items: All items indicated to be embedded in masonry shall be carefully located and anchored to prevent movement during grouting operations. Avoid cutting and patching.

1. Install all anchor bolts and anchors furnished under other Sections.

3.12 CUTTING AND FITTING

A. Cutting: Make all unit cuts, including those for bonding, holes, boxes, etc., with motor-driven masonry saws, using either an abrasive or diamond blade. Cut neatly and locate for best appearance. Cut with proper tools to provide straight, unchipped edges and take care to prevent raking masonry unit corners or edges.

B. Cut and fit for weep hole pipes and miscellaneous penetrations. Cooperate with other Sections' work to provide correct size, shape, and location.

C. Obtain approval prior to cutting or fitting any area not indicated or where appearance or strength of masonry work may be impaired.

3.13 REPAIR, POINTING AND CLEANING

A. Remove and replace masonry units which are loose, chipped, broken, stained or otherwise damaged, or if units do not match adjoining units.

B. Pointing: During the tooling of joints, enlarge any voids or holes and completely fill with mortar.

C. Dry brush masonry surface after mortar has set, at end of each day's work and after final pointing.

D. Leave work and surrounding surface clean and free of mortar spots and droppings.

E. Cleaning:

1. Keep walls clean daily during installation using brushes, rags, and burlap squares. Do not allow excess mortar lumps or smears to harden on the finished surfaces. Remove green mortar with burlap or a dry cloth.
2. Upon completion of masonry installation, repair all holes. Mortar joints that are not properly tooled or that show cracks shall be cut out, removed, and repointed at no cost to the Owner.

F. Final Cleaning:

1. Just prior to project substantial completion, and prior to the application of water repellent/anti-graffiti coating, clean masonry surfaces.

a. Cleaning Product: PROSOCO Sure Klean line of cleaners, product appropriate to installed concrete units, or accepted equal.

1) Run-off from cleaning operations shall be contained, neutralized, and disposed of per State and local regulations. Obtain necessary permits for disposal of run-off.

b. Sandblasting is an acceptable alternative means of cleaning, provided that no silica particulates are used.

1) Sandblasting operations shall not generate large quantities of dust. Employ wet sandblasting methods to control dust.

2. Final cleaning and water repellent/anti-graffiti coating application shall not be scheduled until walls have thoroughly dried out and sealants have been installed and cured.

3.14 FIELD QUALITY CONTROL

A. Owner's Inspector and/or Testing Agency will:

1. Provide the following checks as a minimum:

a. Measurement and mixing of field mixed mortar and grout.
b. Moisture conditions of masonry units at time of laying.
c. Inspection of laying of units with special attention to joints and bonding of units at corners.
d. Proper placement of reinforcement including splices, clearances and supports.
e. Observation of placement of pipes, conduits, or other weakening elements.
f. Inspection of grout spaces immediately prior to grouting for removal of mortar fins, dirt and debris.
g. Continuous inspection of grout placement with attention to procedures to avoid segregation and achieve proper consolidation.
h. Perform or supervise sampling for testing.

B. Contractor shall be responsible for repair of any damage to work caused by testing.

C. Contractor shall pay Owner's Testing Agency for all additional testing required, including masonry cores, when laboratory tests of specimens show compressive strengths below specified minimum and judged to be inadequate by Architect.

END OF SECTION

SECTION 07 19 19

SILICONE WATER REPELLENTS

PART 1 - GENERAL

1.01 SECTION INCLUDES

A. Water-based silicone water repellent and anti-graffiti coating.

1.02 RELATED SECTIONS

A. Section 04 22 00 – Concrete Unit Masonry.

1.03 REFERENCES

A. The publications listed below form a part of this Section to the extent referenced. The publications are referred to in the text by the basic designation only. Refer to Division 01 for definitions, acronyms, and abbreviations.

B. Standards, manuals, and codes refer to the latest edition of such standards, manuals, and codes in effect as of the date of issue of this Project Manual, unless indicated otherwise in CBC Chapter 35 and CFC Chapter 80.

C. Referenced Standards:

1. ASTM D2369 – Standard Test Method for Volatile Content of Coatings.
2. ASTM D3278 – Standard Test Methods for Flash Point of Liquids by Small Scale Closed-Cup Apparatus.

1.04 SUBMITTALS

A. General: Submit in accordance with Division 01.

B. Product Data: Submit the following:

1. Manufacturer's descriptive literature and product data sheets.
2. MSDS.

C. Quality Assurance/Control Submittals:

1. Submit manufacturer qualifications information.
2. Submit applicator qualifications information.
3. VOC content limits certification.
4. Provide narrative description of protection of surrounding areas and non-masonry/concrete surfaces, surface preparation, application, and final cleaning.
5. Manufacturer's application instructions
6. Manufacturer's field reports.

D. Closeout Submittals:

1. Manufacturer's warranty certificate.
2. Cleaning and maintenance data.

1.05 QUALITY ASSURANCE

A. Qualifications:

1. Manufacturer Qualifications: Firm specializing in manufacturing products specified in this Section with a minimum ten years' experience.
2. Applicator Qualifications: Firm specializing in installing work specified in this Section acceptable to manufacturer with experience on at least five projects of similar nature in the past three years of similar nature. Provide a complete list of completed projects, including project name and location, names of Owner and Architect including contact information, and description of products, substrates, and method of application.

B. Regulatory Requirements:

1. Comply with the local Air Quality Management District's (AQMD) rules and regulations.
2. Provide products that meet requirements of local AQMDs for volatile organic compounds (VOC).

C. Certifications:

1. VOC Content Limits Certification: Submit certification that coating product complies with local air quality management district's regulations and prescribed requirements for volatile organic compounds (VOC).

D. Field Sample (Test Panel):

1. Before full-scale application, review manufacturer's product data sheets to determine the suitability of each product for the specific surfaces. Apply coating to test panels to determine appropriate strength, coverage rates, compatibility, effectiveness, surface preparation, application procedures and desired results.
2. Apply coating to test panels as directed by Architect, minimum 48 inches wide by 48 inches high in accordance with manufacturer's written instructions. Allow 24 hours or until panels are thoroughly cured before evaluating final appearance and results. Do not begin full-scale application until test panels are reviewed and accepted by the Architect.
3. Allow coating to cure at least seven days prior to testing using low-pressure tube test (RILEM) or masonry absorption test (MAT) methods.

E. Tests:

1. Perform tests in accordance with Division 01.
2. Test Panel: Owner appointed testing laboratory shall perform tests on test panels using low-pressure tube test (RILEM) or masonry absorption test (MAT) methods.
3. Executed Work: Owner appointed testing laboratory shall perform two tests for each type of substrate on executed work at randomly selected areas designated by Architect.

4. Owner shall pay for these tests; however, retesting required because of non-conformance shall be paid for by the Contractor.

F. Pre-Installation Meetings:

1. Conduct pre-installation meeting in accordance with Division 01.
2. Convene pre-installation meeting prior to commencing work of this Section. Require attendance of parties directly affecting work of this Section including Contractor, Architect, applicator, and manufacturer’s representative. Review environmental requirements, test panel procedures, protection of surrounding areas and non-masonry surfaces, surface preparation, application, field quality control, final cleaning, coordination with other work, and extended warranty requirements.
3. Coordinate work in this Section with work in related Sections.

1.06 DELIVERY, STORAGE, AND HANDLING

A. Deliver products in manufacturer's original containers, dry and undamaged, with seals and labels intact.

B. Storage and Protection: Store containers in a cool, dry place. Keep containers tightly closed when not dispensing. Keep away from sparks and open flame. Store and handle materials in accordance with manufacturer’s written instructions. During storage, maintain temperature between 45 degrees F and 100 degrees F.

1.07 ENVIRONMENTAL REQUIREMENTS

A. Temperature: Water repellent product may be applied at any temperature, providing that there is no frozen moisture present in the substrate. When applied at temperatures below 40 degrees F, the product may cure at a slower rate. Optimal ambient temperature for applying product is 40 degrees F to 95 degrees F.

B. Do not apply material if the substrate is wet or contains frozen moisture. Allow substrate to dry for a minimum of 48 hours after rain or power washing.

C. Do not apply material during inclement weather or if precipitation is expected within 12 hours.

D. Do not use spray methods of application under windy conditions.

1.08 WARRANTY

A. Provide manufacturer’s ten year warranty.

B. Prior to applying coating, review and comply with manufacturer’s warranty processing requirements – do not proceed until warranty processing requirements have been met.

1.09 OPERATION AND MAINTENANCE DATA

A. Submit under provisions of Division 01.

B. Provide cleaning and maintenance data.

PART 2 - PRODUCTS

2.01 MANUFACTURERS AND PRODUCTS

A. Acceptable Manufacturers and Products:

1. PROSOCO, Inc., Lawrence, KS; 800-255-4255, www.prosoco.com. Product: Sure Klean Weather Seal Blok-Guard® & Graffiti Control WB 15.
2. or accepted equal.

B. Substitutions: Under provisions of Division 01.

2.02 WATER REPELLENT/ANTI-GRAFFITI COATING

A. Penetrating sealer formulated using a clear-drying, water-based silicone emulsion. Penetrates without altering the natural appearance of the substrate. Inorganic; not affected by ultraviolet rays, ozone, salt spray, and acid rain. Breathable; allows moisture-vapor to escape while preventing liquid penetration.

B. Properties:

1. Form: Opaque white liquid.
2. Specific Gravity: 1.00
3. pH: 9.00
4. Weight: 8.35 pounds per gallon.
5. Active Content: 15 percent.
6. Total Solids: 15 percent per ASTM D2369.
7. VOC Content: Less than 50 g/L.
8. Flash Point: Greater than 212 degrees F per ASTM D3278.
9. Freeze Point: 32 degrees F.
10. Shelf Life: One year in tightly sealed, unopened container.

PART 3 - EXECUTION

3.01 EXAMINATION

A. Examine substrate conditions to determine that conditions are acceptable to receive coating. Verify the following:

1. The required joint sealants have been installed.
2. Masonry and mortar has cured a minimum of 28 days.
3. Surface to be treated is clean, dry, absorbent, and contains no frozen moisture.
4. Environmental conditions are appropriate for application.

B. Report unacceptable conditions to the Architect. Begin installation only when unacceptable conditions have been corrected.

3.02 PREPARATION

A. Protection:

1. Protect surrounding areas such as, but not limited to, glass, landscaping, building occupants, pedestrians, vehicles, and non-masonry surfaces from product splash, residue, fumes, and wind drift during the work.
2. Take special precautions to prohibit fumes from entering the building being treated. Cover and turn-off ventilation systems and fresh air intakes.
3. Protect and/or divert foot and auto traffic during application of coating.

B. Surface Preparation:

1. Clean all dirt, oil, grease, mold, mildew, efflorescence, or any other coating or material from surfaces that could interfere with penetration, performance, absorption, adhesion, or aesthetics of coatings per coating manufacturer's recommendations. Allow surfaces to dry completely before application of coatings.
2. Repair, patch, and fill all cracks, voids, defects, and damaged areas in surface as accepted by Architect. Allow repair materials to cure completely before application of coatings.
3. Seal all open joints.
4. Allow masonry surfaces to cure for a minimum of 28 days before application of coatings.
5. Surface and air temperatures shall be between 40 degrees F and 95 degrees F during application and for 8 hours after.

C. Test Area:

1. Test a small area of each surface to confirm suitability and desired results before starting overall application.
2. Include in test area any previous repairs and patches, including aesthetic cementitious finishes.
3. Different surface compositions may result in absorption and/or appearance differences. Test with same equipment, recommended surface preparation, and application procedures planned for general application.

3.03 APPLICATION

A. Apply coating to substrates in accordance with manufacturer's written instructions, environmental requirements, and application procedures determined from test panel results accepted by Architect.

B. Apply to clean, dry, cured, and properly prepared surfaces.

C. Apply coating after sealants have fully cured. Coordinate with Section 07 90 00.

D. Apply material as shipped by manufacturer – do not dilute. Stir thoroughly before use.

E. Apply material using a high-volume, low pressure, pump-up sprayer (less than 50 psi), with fan tip. Avoid atomization of material. Apply two coats of product allowing first coat to dry to the touch, or within one hour, before applying second coat.

1. Apply from the bottom up.

2. Saturate surface wet-on-wet, spraying from the bottom up. Apply enough material to create a 6 inch to 8 inch rundown below the contact point. Avoid excessive overlapping.
3. Let the first application penetrate surface for 2 minutes to 3 minutes. Reapply in same saturating manner to ensure complete coverage of surfaces.
4. Immediately back-roll or brush out runs and drips that do not penetrate immediately for a uniform appearance and to prevent build-up.

F. Coating shall be applied to entire length and height of each wall segment (corner to corner). Do not stop coating application anywhere along each wall segment.

G. Drying Time: In weather conditions of 60 degrees F to 80 degrees f and 50 percent humidity, material dries to the touch in approximately one hour and gains water repellency properties in 24 hours. Drying takes longer at lower temperatures. Protect treated surfaces from precipitation for at least 6 hours after application.

3.04 FIELD QUALITY CONTROL

A. General: Comply with requirements of Division 01.

B. Coating work shall be inspected by Owner's representative, Architect, Project Inspector, and manufacturer's representative; and compared with accepted test panel.

C. Manufacturer's Field Services: Provide services of manufacturer's authorized field representative to verify specified products are used; protection, surface preparation, and application of water repellents are in accordance with manufacturer's written instructions; and the test panel is accepted by Architect.

3.05 CLEANING

A. Clean as recommended by manufacturer. Do not use materials or methods which may damage finish surface or surrounding construction.

B. Upon completion of coating application, remove all equipment, materials and debris, leaving the area in an undamaged and acceptable condition. Dispose of coating containers according to state and local environmental regulations.

C. Clean, repair, restore, or replace to the satisfaction of the Architect, all materials, landscaping, and all non-masonry surfaces damaged by exposure to coatings at no additional cost to Owner.

END OF SECTION

SECTION 07 90 00

JOINT SEALERS

PART 1 – GENERAL

1.01 SUMMARY

A. SECTION INCLUDES

1. Preparation of sealant substrate surfaces.
2. Sealant and backing.

B. RELATED SECTIONS

1. The General Conditions, Supplementary Conditions and Division 1 are fully applicable to this Section, as if repeated herein.
2. Section 04 22 00: Concrete Unit Masonry.

C. REFERENCES

1. FS TT S 001543 Sealing Compound, Silicone Rubber Base.

1.02 SUBMITTALS

A. Submit manufacturer’s product data under provisions of Section 01 33 00 for each product required.

B. Submit product data indicating sealant chemical characteristics, performance criteria, limitations, and color availability.

C. Submit samples under provisions of Section 01 33 00.

D. Submit standard color ranges of exposed materials for Architect selection.

E. Submit manufacturer's installation instructions under provisions of Section 01 33 00.

1.03 QUALITY ASSURANCE

A. Manufacturer: Company specializing in manufacturing the products specified in this Section with minimum three years’ experience.

B. Applicator: Company specializing in applying the work of this section with minimum three years’ experience, with projects of a similar size and type.

C. Conform to Sealant Waterproofing and Restoration Institute requirements for materials and installation.

D. Prior to installation of joint sealants, field test adhesion to joint substrates.

1. Install joint sealants in 5-foot joint lengths. Allow to cure before testing. Test adhesion by pulling sealant out of joint.
2. Perform field tests for each type of joint sealant and joint substrate.
3. Arrange for tests to take place with joint sealant manufacturer’s technical representative present.
4. Report whether or not sealant in joint connected to pulled out portion failed to adhere to joint substrates or tore cohesively. Include data on pull distance used to test each type of product and joint substrate.
5. Sealants not evidencing adhesive failure from testing, in absence of other indications of non-compliance with requirements, will be considered satisfactory. Do not use sealants that fail to adhere to joint substrate during testing.

1.04 ENVIRONMENTAL REQUIREMENTS

A. Do not install sealants under adverse weather conditions or when temperatures are above or below manufacturer's recommended limitations for installation.

B. Deliver materials in the unopened, original containers or unopened packages with manufacturer’s name, labels, product identification, color, expiration period, curing time and mixing instructions for multi-component materials.

1.05 SEQUENCING AND SCHEDULING

A. Coordinate the work of this Section with all Sections referencing this Section.

1.06 WARRANTY

A. Provide two-year warranty for materials and workmanship under provisions of Section 01 33 00.

B. Warranty: Include coverage of installed sealants and accessories which fail to achieve watertight seal, exhibit loss of adhesion or cohesion, or do not cure.

PART 2 – PRODUCTS

2.01 SEALANTS

A. Silicone Sealant: Silicone Sealant (use at masonry applications): FS TT S 01543, Class A, low modulus type; Spectrum I as manufactured by Tremco, Inc., or accepted equal.

B. Substitutions: Under provisions of Section 01 60 00.

C. Color of sealant shall be as selected by Architect.

2.02 ACCESSORIES

A. Primer: Non staining type, recommended by sealant manufacturer to suit application.

B. Joint Cleaner: Noncorrosive and non-staining type, recommended by sealant manufacturer; compatible with joint forming materials.

C. Joint Backing: Non-staining; compatible with sealant and primer; such as round, closed cell polyethylene foam rod; oversized 30 to 50 percent larger than joint width. Materials impregnated with oil, bitumen or similar materials shall not be used. Sealant shall not adhere to back-up material.

D. Bond Breaker: Pressure sensitive tape recommended by sealant manufacturer to suit application.

E. Solvents: cleaning agents or other accessory materials shall be as recommended by the sealant manufacturer.

PART 3 – EXECUTION

3.01 EXAMINATION

A. Verify that surfaces and joint openings are ready to receive work and field measurements are as shown on Drawings and recommended by the manufacturer.

B. Beginning of installation indicates installer acceptance of existing surfaces.

3.02 PREPARATION

A. Clean and prime joints in accordance with manufacturer's instructions.

B. Remove loose materials and foreign matter which might impair adhesion of sealant.

C. Verify that joint backing and release tapes are compatible with sealant.

D. Perform preparation in accordance with sealant manufacturer's recommendations.

E. Protect elements surrounding the work of this Section from damage or disfiguration.

F. Clean concrete, masonry and similar porous surfaces, by brushing, grinding, blast cleaning, mechanical abrading, or acid washing to produce a clean, sound substrate. Remove loose particles remaining from cleaning operations by vacuuming or blowing out joints.

3.03 INSTALLATION

A. Install sealant in accordance with manufacturer's instructions.

B. Caulk exterior joints where indicated on Drawings.

C. Measure joint dimensions and size materials to achieve required width/depth ratios.

D. Install joint backing to achieve a neck dimension no greater than 1/3 the joint width. Roll the material into the joint to avoid lengthwise stretching. Do not twist or braid rod stock.

E. Install bond breaker where joint backing is not used.

F. Prime surfaces to receive joint sealant with primer recommended by sealant manufacturer.

G. Apply sealant within recommended application temperature ranges. Consult manufacturer when sealant cannot be applied within these temperature ranges. Apply masking tape where required to protect adjacent surfaces from sealant application.

H. Install sealant free of air pockets, foreign embedded matter, ridges, and sags.

I. Tool joints concave.

3.04 CLEANING AND REPAIRING

A. Clean work as recommended by manufacturer.

B. Clean adjacent soiled surfaces. Use a solvent or cleaning agent as recommended by the sealant manufacturer.

C. Repair or replace defaced or disfigured finishes caused by work of this Section.

3.05 PROTECTION OF FINISHED WORK

A. Protect finished installation until Project Completion.

B. Protect sealants until cured.

C. Do not paint silicone sealant.

END OF SECTION

SECTION 08 71 00

GATE HARDWARE

PART 1 - GENERAL

1.01 SECTION INCLUDES

A. BHMA finish gate hardware for gate and gate frames.

1.02 PRODUCTS SUPPLIED BUT NOT INSTALLED UNDER THIS SECTION

A. Hardware templates for gates, gates, and frames.

1.03 RELATED SECTIONS

A. Section 32 31 00 – Decorative Metal Anti-Climb Fencing and Gates

B. Section 32 31 19.16 – Swinging Decorative Metal Gates.

C. Divisions 26 through 28: Electrical rough in, wiring and connectors for electrified hardware including, but not limited to:

1. Wire and connectivity from ceiling through frame to electrified hardware devices including non-Section 08 71 00 task of providing wiring inside of gates.

1.04 REFERENCES

A. The publications listed below form a part of this Section to the extent referenced. The publications are referred to in the text by the basic designation only.

1. Refer to Division 01 for definitions, acronyms, and abbreviations.
2. Unless otherwise noted; standards, manuals, and codes refer to the latest edition as of the issue date of this Project Manual.

B. Conform to the following Referenced Standards and Requirements:

1. CBC – 2022 California Building Code.
2. ADA – Americans with Disabilities Act - 2010 Standards for Accessible Design.
3. ANSI A156 Series – Builders Hardware Manufacturers Association (BHMA) Standards Set.

C. Conform to the following Regulatory Requirements (CBC – 2022 California Building Code):

1. Gates / Gateways as part of an accessible route shall comply with CBC Section 11B-404.
2. All hardware for accessible gates shall meet the requirements of CBC Sections 11B-404.2.7, 11B-404.2.9, and 1010.1.9.1.
3. The clear opening width for a gate shall be 32 inches minimum. The swinging gates it shall be measured between the face of the gate and the frame stop, with the gate open 90 degrees.
   a. There shall be no projections into it below 34 inches above finish floor and 4 inch maximum projections into it between 34 inches and 80 inches above finish floor or ground.

b. Gate closers and stops shall be permitted to be 78 inches minimum above finish floor or ground per CBC Section 11B-404.2.3.2.

4. Hand-activated gate opening hardware, handles, pulls, latches, locks, and other operating devices on accessible gates:
   a. Shall be operable with one hand and shall not require tight grasping, pinching, or twisting of the wrist.
   b. Lever hardware shall be so mounted / centered between 36 inches and 44 inches above finished floor or ground.
   c. Panic hardware shall be so mounted / centered between 36 inches and 44 inches above finished floor or ground. The clear width of the exit way is not less than 32 inches measured between the face of the gate and the opposite stop per CBC Section 11B-404.2.3.
   d. Hardware for gate handles, pulls, latches, locks and other operating devices for use on means of egress gates shall comply with SFM Standard 12-10-2, Section 12-10-202 as contained in CCR Title 24, Part 12.

5. The force for pushing or pulling a gate open shall be as follows per CBC Section 11B-404.2.9:
   a. Interior hinged gates, sliding or folding gates and exterior hinged gates operating force required to push or pull open a gate shall not exceed 5 pounds (22.2 N).
      1) These forces do not apply with to the force required to retract latch bolts or disengage other devices that hold the gate in a closed position.
   b. The force required to activate any operable parts, such as retracting latch bolts or disengaging other devices, shall be no greater than 5 pounds to comply with CBC Section 11B-309.4.
   c. Forces shall be applied to the latch side of the gate per CBC Section 1010.1.3.1.

6. Gate closing speeds shall be as follows per CBC Section 11B-404.2.8:
   a. Mount gate closers for maximum swing of gate before setting stops.
   b. Gates/gates closers, when provided, shall have sweep period adjusted: minimum of 5 seconds for a gate/gate to close from the 90-degree position to the 12 degree position.
   c. Gates/gates with spring hinges require a minimum of 1.5 seconds to close from the 70 degree to the closed position.

7. Floor stops shall not be located in the path of travel and 4 inches maximum from walls.
8. Hardware, including panic hardware, shall not be provided with “Night Latch” (NL) function for any accessible gates or gates unless the following conditions are met. Such conditions must be clearly demonstrated and indicated in the specifications for devices:
   a. Such hardware has a “dogging” feature.
   b. It is dogged during the time the facility is open.
   c. Such “dogging” operation is performed only by employees as their job function (non-public use).

1.05 QUALITY ASSURANCE

A. Supplier Qualifications and Documentation:

1. Hardware Supplier Qualifications: Firm specializing in the supply and servicing of institutional and commercial gate hardware; accredited by manufacturers; and having a minimum of three years documented experience. Hardware supplier to furnish list of at least ten past, finished

projects. Include date competed, project location, and references. At least one member of the firm's staff shall be a member of DHI in good standing and is a DHI certified consultant having earned the title Architectural Hardware Consultant (AHC).

B. Manufacturer of Submitted Devices - Qualifications and Documentation:

1. Manufacturer Qualifications: Manufacturer specializing in manufacturing institutional and commercial gate hardware with a minimum five years with the following documented experience. Furnish list of at least ten past, finished projects. Include date competed, project location, and references. Past project contact information will determine if Builders Hardware is acceptable.

C. Installer of Submitted Devices - Qualifications and Documentation:

1. Installer of assembly shall be trained in the trade of hanging commercial gates on commercial frames with commercial hardware. Supplier and Installer of gate assemblies shall be authorized representative of manufacturers and have minimum of five years successful experience in detailing, supplying, and installing gate assemblies specified on projects of similar size, complexity, and type to this Project. Provide written documentation to show closers will be installed by an individual with successful experience installing closers to meet 5-pound opening force for gate complexity.

1.06 SUBMITTALS

A. The hardware groups/sets specified in Section 08 71 00 - Part 3 are intended to establish type and design standard when used together with the requirements of this Section, Drawings and general provisions of the Contract, including General and Supplementary Conditions and Division 01 Specification Sections. Examine Contract Documents and furnish proper hardware for gate openings. Refer to specifications for clarification and detailed requirements and provide products and services in specifications even if not written in hardware groups/sets in Section 08 71 00 - Part 3.

B. For each opening submit coordinated (means and methods) requirements in accordance with Division 01 and a detailed gate, frame and hardware schedule. See pre-hardware and hardware scheduling requirements below. Submittals that do not meet means and methods, including missing related gates/frames submittal/shop drawings, will be returned for correction before checking.

C. Pre-Hardware Scheduling Tasks:

1. Coordinate work of this Section with other directly affected Sections and scope.
2. Provide required Division 08, means and method type work in accordance with Contract Documents at no additional cost to project, including Division 01 and language below. This Section supplier shall be provided with full documents, not just Section 08 71 00 Part 3 hardware group/sets as that process does not meet Contract requirements.
3. Means and method type work includes, but is not limited to, coordination with plans and other specifications, templating, Section 08 71 00, and other Division 08 Section engineering and coordination. Starting submittal work or labor before means and method type work is completed does not constitute change orders.

4. Provide Request for Information (RFIs) for clarification items before submittals. This Section is not to be a stand-alone submittal but requires multiple Sections and Drawings coordination before submittals will be reviewed.
   a. Coordinate length and sizes for hardware devices before submittals, Verify the gate hardware is compatible for use with the gates and gate/frames.
   b. Report all prevailing conditions that will adversely affect satisfactory execution of work before submittals.
      1) Example 1: If gate stiles would inhibit the use of specified hardware, provide RFIs before starting detailed hardware headings or group submittal process.
      2) Example 2: Coordinate length and sizes for hardware devices before ordering materials. Verify the gate hardware is compatible for use with the gates and/or gate/frames including, but not limited to, special templates and sizes of devices.
   c. This Section clarification items (RFIs) shall be reviewed by a non-design team coordinator before sending to design team for review.
      1) For clarification items that are means and methods (directed to or from one vendor to another vendor, framer/installer), Contractor shall coordinate and answer or list questions that are not design scope.

5. Multiple submittals for this Section work will not meet Contract requirements. Exceptions are as follows:
   a. Submittals may be broken up into different gate vendor packages (for example: one gate vendor package, one hollow metal gate vendor package) but breaking each of these packages into multiple or separate packages is not permissible (example: separate project buildings or different floors broken out not permitted).
   b. Frames that are required to be ordered early in the build process (under ten frames / openings required to meet project deadlines for early site work) may be broken into separate packages but remaining hardware in these packages will be rejected and not reviewed.

6. Coordinate with gate/frame internal reinforcement for gate hardware. In particular, coordinate gate preparation in accordance with applicable regulatory and trade standards specified.
7. Coordinate keying requirements with all openings with one Vendor. For keying scope, even if different Section gate/frame/gate scope packages are submitted with different hardware schedule submittals, only one Section 08 71 00 supplier is to oversee, coordinate, submit, furnish, and install keying. Coordinate per Section 08 71 00 and per means and methods before submits begin.
8. To detail submittals and nomenclature for electrified hardware, review and coordinate electrical specifications and drawings for scope that could affect hardware selections:
   a. Scope includes, but not limited to bollard locations if related to project and/or access control if related to project and/or electrical Divisions 26-28 and applicable Drawings.
   b. For electrified hardware interface with non-Division 08 access control or electrified tasks, the non-Division 08 access control or security vendor task shall provide a written agenda/plan how access control or security scope will be installed for a complete and operational system. Written agenda shall include power requirements and additional relays at no additional cost.

D. Hardware Schedule:

1. Submit required vendor qualification letters and documentation (see above “QUALITY ASSURANCE”).
2. Non-design team coordination and requirements:
   a. Submittals for coordinated gate/frame/hardware items, shall be submitted at the same time for review of total opening requirements. Do not submit Section 08 71 00 scope without coordinated gate and frame packages and above RFI/clarification process tasks completed. Submittals that do not include related gates/frames will be returned for correction before checking.
   b. Section submittals and/or shop drawings to be reviewed and have comments by non-design team (Contractor) before sending to design team. If submittals do not meet Contract requirements, return to hardware vendor for re-submittal. In many cases, unacceptable submittals are passed though without non-design team (Contractor) comments. Coordinate per Contract.

3. Submit hard copies of hardware schedule (number of copies per Division 01) as well as submit editable, PDF files via electronic email of ftp site process in Vertical Format as illustrated by the Sequence of Format for the Hardware Schedule as published by the Gate and Hardware Institute. Horizontal-type schedules will be returned for correction before reviewing.
   a. Shop drawings / hardware schedule shall clearly indicate each hardware group specified and manufacturer of each item proposed as well as each gate number that the hardware is assigned to.
   b. Vertical schedule format sample:

Heading Number 1 (Gate Schedule or Architectural Assigned Hardware Group/Set number from Part 3 = HW #__)				
1 Single Gate #1 - Exterior from Corridor 101		Opening Size	90°	RH	Rating
Quantity	Device Description	Device # (include specification language)	Finish	Manu-facturer
4	Hinges	4.5 x 4.5 NRP x fasteners	630	
1	Lockset		630	SC
1	I/C Cylinders	Rim or Mortise x appropriate cam x blocking rings as required (rim or mortise type and quantity as required by locking device)	626	SC
1	Permanent Core	20-740	626	SC
1	Stop and Holder	1261	626	TR
1	Gate Silencers	SR64 or SR65 (as required)	GR	IV

4. Illustrations from manufacturer’s catalogs and product data:
   a. Provide cut sheets and product data with vertical format hardware submittal (same timeframe) as well as gate and frame information to be reviewed as one submittal package. Manufacturer’s hard copy as well as PDF catalog cut sheets and product data shall not be

submitted before editable, PDF files vertical format hardware submittal. See above Sequence of Format requirement. Catalog cut sheets and product data sent as submittals before the typed-out nomenclature of hardware part numbers (vertical format hardware submittal) will be returned without review.

5. Provide hardware schedule and hardware templates to gate and frame manufacturer. Provide two templates to those manufacturers who are not currently registered template book holders.

6. Wiring Information: Provide manufacturers' wiring information including manufacturers' gate elevation diagrams for electrified hardware based on Gate Hardware Institute (DHI) core class "Electrified Architectural Hardware" DHI class #COR133. Openings where only magnetic hold-opens or gate position switches are specified do not require wiring information. Provide information with hardware schedule submittal for review. Provide detailed wiring diagrams with hardware delivery to jobsite.

E. Vendor meetings or coordination prior to purchasing materials:

1. Convene coordination meeting between all opening vendors and installers at least two weeks prior to purchasing gates, frames, gate hardware, and electrical devices required for complete systems. Attendance includes but is not limited to hardware supplier and/or installer, gate supplier and/or installer, frame supplier and/or installer, security card reader vendor and/or installer, and electrical. If hardware changes are required due to these meetings, communicate changes to design team before ordering materials.

F. Templates:

1. Provide listing of manufacturer's template numbers for each item of hardware in hardware schedule.
2. Submit templates and "Reviewed Hardware Schedule" to gate and frame supplier and others as applicable to enable proper and accurate sizing and locations of cutouts and reinforcing.

G. Installation Instructions:

1. Provide manufacturer's written installation and adjustment instructions for finish hardware.
2. Send installation instructions to site with hardware.

H. Contract Closeout Submittals: Include specific requirements indicated below.

1. Operating and maintenance manuals: Submit three sets containing the following:
   a. Complete information in care, maintenance, and adjustment, data on repair and replacement parts, and information on preservation of finishes.
   b. Catalog pages for each product.
   c. Name, address, and phone number of local representative for each manufacturer.
   d. Parts list for each product.
   e. Copy of final accepted hardware schedule, edited to reflect "As installed".
   f. Copy of final keying schedule.

1.07 DELIVERY, STORAGE, AND HANDLING

A. Comply with requirements of Division 01.

B. Deliver products in manufacturer's original containers, dry and undamaged, with seals and labels intact.

C. Storage: Store materials in a cool and dry location, elevated from the ground and protected from the elements, and secured from theft or pilferage.

1.08 WARRANTY

A. Comply with provisions of Division 01.

B. Provide warranties of respective manufacturers' regular terms of sale from day of final acceptance as follows:
   1. Locksets: "L" Series Three years – "ND" Ten years.
   2. Electronic: One year.
   4. Exit devices: Three years.
   5. All other hardware: Two years.

1.09 MAINTENANCE

A. Provide special wrenches and tools applicable to each special hardware component.

B. Provide maintenance tools and accessories supplied by hardware manufacturer.

PART 2 - PRODUCTS

2.01 FINISHES

A. Typical BHMA finish designation references:

   1. Typical BHMA finish designation references:
      a. BHMA 626 – Satin chromium plated brass or bronze.
      b. BHMA 628 – Satin or dull aluminum, clear anodized (uncoated).
      c. BHMA 630 – Satin stainless steel.

2.02 HARDWARE TEMPLATE

A. Make templates for hardware to be applied to gates, metal gates, and pre-finished gates.

B. Hinge templates shall conform to ANSI A156.7.

C. Promptly furnish template information or templates to gate and frame manufacturers.

D. Coordinate hardware items to prevent interference with each other.

2.03 SCREWS, BOLTS, AND FASTENING DEVICES

A. All exposed fasteners to be stainless steel or zinc plated.

B. Exposed head oval Phillips type screws in countersunk holes unless otherwise specified.

1. Use screws, bolts, washers, grommets, nuts, and other fastening devices of appropriate length, type, head, metal, and finish as necessary for proper match and application of hardware.

C. Exit/panic devices:

1. Install using concealed fasteners. Where there is insufficient blocking in the gate or reinforcement in the gate and/or frames utilize through bolts or SNB devices. See related Sections as design should have blocking in the gate or reinforcement in the gate and/or frames.

2.04 EXIT GATES

A. Where hardware groups/sets have different information, refer to the following for clarification. Provide hardware groups/sets devices along with added devices as indicated on drawings and detailed requirements for each type of device. Provide all specifications even if not written in hardware sets/groups.

B. Provide all hardware necessary to meet the requirements of CBC for exit gates, as well as to other requirements specified, even if such hardware is not specifically mentioned under Article “Hardware Schedule” of this Section.

2.05 SUBSTITUTIONS

A. Products referenced by specific brand names and model numbers have been identified by Owner to match other products in use either completed or in the course of completion. No substitutions permitted per Public Contract Code Section 3400.

1. Otherwise refer to Division 01 for substitutions.

2.06 HANGING HARDWARE

A. Gate Hanging Devices:

1. Ornamental and Steel Gate Self-Closing Hinges:
   a. Acceptable Manufacturers:
      1) Locinox Manufacturing (no known equal).
   b. Mammoth 180 Hydraulic Closers/Hinges Set. Ultra heavy duty 180 degree hydraulic gate closer and hinge for gates up to 440 pounds.
   c. Heavy duty full surface mounted hinge and vertical built-in closer not exceed 5 pounds opening force.

2.07 SECURING DEVICES (INCLUDING ACCESS CONTROL CARDREADER LEVER TRIM)

A. Provide all latching devices that are lockable including, but not limited to, gate locks and panic/exit devices that comply with CBC Sections 1010.2 through 1010.2.8.2. All new construction projects shall include locks that allow the gates to be locked from the inside.

1. This requirement applies to classrooms and any other school room with an occupancy of five or more persons, but does not include gates that are locked from the outside at all times or student restrooms.
2. For access control card reader Schlage AD-300 lever trim locks and panic/exit hardware, an interior button is to be part of the factory locking trim units so that when the interior side lockdown button is pushed by building occupants, the exterior or lockable -side of the lock/lever will automatically lock down for no entry by un-authorized persons.

B. Cylindrical Locksets and Latchsets:

1. Acceptable Manufacturers:
   a. Schlage Lock Co. ND Series x RHODES levers.
   b. Owner's standard, no substitutions permitted.

2. Levers:
   a. Provide levers to return to gate within 1/2 inch.
      1) Provide exterior side lever trim with vandal resistant feature. Locked exterior lever freely rotates withstanding abuse and vandalism while remaining securely locked. Example: Schlage ND series Vandlgard™.

3. Where hardware groups/sets have different information, refer to the following for clarification. Provide hardware groups/sets devices along with added devices as indicated on Drawings and detailed requirements for each type of device:
   a. Provide cylindrical locksets exceeding the ANSI/BHMA A156.2 Grade 1 performance standards for strength, security, and durability in the categories below.
      1) Abusive Locked Lever Torque Test – minimum 3,100 inch-pounds without gaining access.
      2) Offset lever pull – minimum 1,600-foot pounds without gaining access.
      3) Vertical lever impact – minimum 100 impacts without gaining access.
      4) Cycle life - tested to minimum 16 million cycles per ANSI/BHMA A156.2 Cycle Test with no visible lever sag or use of performance aids such as set screws or spacers.
   b. Backsets: 2-3/4 inches.
   c. Provide solid steel anti-rotation through bolts and posts to control excessive rotation of lever.
   d. Provide lockset that allows lock function to be changed to over twenty other common functions by swapping easily accessible parts.
   e. Provide locksets with separate anti-rotation thru-bolts, and no exposed screws.
   f. Provide independently operating levers with two external return spring cassettes mounted under roses to prevent lever sag.
   g. Provide wired electrified options as scheduled in the hardware sets.
      1) 12 through 24-volt DC operating capability, auto-detecting.
      2) Selectable EL (fail safe)/EU (fail secure) operating mode via switch on chassis
      3) 0.230A (230mA) maximum current draw.
      4) 0.010A (10mA) holding current.
      5) Modular / "plug in" request to exit switch.
   h. Provide standard ASA strikes unless extended lip strikes are necessary to protect trim.
      1) Provide ANSI 4-7/8 inch standard strike.
      2) Provide curved lip-type strike at all locations if possible to prevent catching clothing or other objects on strike. Where required, provide detail and flat strike.

3) Where required, provide extended lip strike so that the lock or latchset latch will not come in contact with frame or added trim on or adjacent to the frame. Example: Don Jo device #MEST-104, but provide submitted manufacturer equivalent extended lip strike.

C. Mortise Locksets and Latchsets:

1. Acceptable Manufacturers:
   a. Schlage Lock Co. L9000 Series.
   b. Owner's standard, no substitutions permitted.

2. Levers:
   a. Provide levers to return to gate within 1/2 inch (levers that have return to gate within 1/2 inch to meet California code mandates: no space/gap greater than 1/2 inch between face of gate and lever return).

3. Where hardware groups/sets have different information, refer to the following for clarification. Provide hardware groups/sets devices along with added devices as indicated on Drawings and detailed requirements for each type of device:
   a. Locksets shall meet the requirements of ANSI/BHMA A156.13-1994, Operational Grade 1.
   b. Provide only thumbturn devices that meet accessibility requirements. Example: Schlage L583-363 devices. No center pivoting thumbturns allowed.
   c. Provide thumbturn devices that meet accessibility requirements (no center pivoting thumbturns allowed). Example: Schlage thumbturn x L583-363 device.
   d. If deadbolts or lockbolts are utilized on the project, devices shall be interconnected with the latching mechanism on all gates to provide single movement function to unlatch gates.
   e. Backset: 2-3/4 inches. Provide minimum 1 inch throw stainless steel deadbolt Provide minimum 3/4 inch throw for latch bolt.
   f. Strikes:
      1) Provide ANSI 4-7/8 inch standard strike.
      2) Provide curved lip-type strike at all locations if possible to prevent catching clothing or other objects on strike. Where required, provide detail and flat strike.
      3) Where required, provide extended lip strike so that the lock or latchset latch will not come in contact with frame or added trim on or adjacent to the frame. Example: Don Jo device #MEST-104, but provide submitted manufacturer equivalent extended lip strike.

D. Exit Devices and Removable Mullions:

1. Acceptable Manufacturers:
   a. Von Duprin.
   b. Owner's standard, no substitutions permitted.

2. Where hardware groups/sets have different information, refer to the following for clarification. Provide hardware groups/sets devices along with added devices as indicated on Drawings and detailed requirements for each type of device:
   a. The unlatching force of panic hardware shall not exceed 5 pounds, applied in the direction of travel, certified by UL to meet requirements of CBC Section 11B-309.4 (Von Duprin nomenclature "AX").
   b. Exit devices shall be ANSI A156.3, Grade 1; UL Listed.

c. Provide panic devices complying with CBC Section 1010.2.9. The panic/exit device push-bar shall extend across no less than one-half the width of the gates/gates.
d. Panic hardware shall comply with 2022 CBC. Panic bar shall be mounted 38 inches to 44 inches above finish floor.
e. All exit devices shall meet Section 12-10-302: For Von Duprin shipped to project site with exit device, isometric cap as to not catch items on panic device push bar (nomenclature "PA")

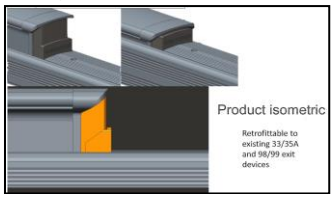

f. Where removable mullions are not specified in hardware groups, provide keyed removable mullions at all locations in order for gate to properly latch and secure rooms and buildings with rim or mortise type exit/panic bar devices.
   1) Removable with single turn of building key. Securely reinstalled without need for key.
   2) Provide stabilizers for removable mullions at all locations.
g. Trim:
   1) Where lever trim is specified, provide lever design to match lockset levers.
   2) Where levers are specified for exit devices, provide exit device lever trim with vandal resistant feature (heavy duty lever trim designed to with stand abuse and vandalism):
      a) Von Duprin 996 R/V.

2.08 KEY SYSTEMS (CYLINDERS, CORES, AND KEYS)

A. Where hardware groups/sets have different information, refer to the following for clarification. Provide hardware groups/sets devices along with added devices as indicated on drawings and detailed requirements for each type of device. Keying specifications below override hardware set/group nomenclature.

B. For all locking or dogging devices, provide complete cylinder system and coordination whether or not specified in Section 08 71 00, Part 3 hardware sets as required by locking device.

   1. Different locking devices require a set of different requirements including, but not limited to, appropriate cams for mortise-type cylinders, appropriate tail pieces and size for rim-type cylinders, blocking rings as required for locking and cylinder devices to not rattle and meet manufacturers' warranties, as well as cylinders that are to be coordinated with construction cores/cylinders and final pinned cores/cylinders shipped to Owner by Registered Mail per below to meet system requirements.
   2. Scope is means and method type work by a certified locksmith and/or DHI individual to engineer rim or mortise cylinders and blocking rings or tail-piece components as required for submitted locking devices. Since there could be as many as 500 options for rim or mortise cylinders with the locking devices and different manufactures that may be submitted, this means/methods-type work is required (similar to templating gates and frames to accept hardware). Coordinate as required.

C. Key Systems (Cylinders, Cores, and Keys):

1. Manufacturers:
   a. Schlage Lock Co.
   b. Owner's standard, no substitutions permitted.

2. For all locking or dogging devices, provide complete Primus XP Level 3/Primus keying system whether or not specified in Section 08 71 00, Part 3 hardware sets including lock cores, mortise cylinders, and rim cylinders keyed as directed by Owner in submittal process. Key System shall be:
   a. Furnish a Proprietary Schlage master key system as directed by the Owner or Architect. Key system shall be designated and combinationed by the Schlage Master Key Department even if pinned by the Authorized Key Center, Authorized Security Center or a local authorized commercial dealer. This is to be a Schlage Primus keying system. SCUSD to verify all keyways. Patented Schlage Lock Co. Primus XP provide as follows: Patented Schlage Lock Co. Primus I/C mortise and exit devices with non-I/C #20-750 or 20-765-XP or per above what # needs to be for the cylindrical locks to have primus for locking devices (final keyway to be selected in keying meeting):
      1) 6 pin x Standard Core plug (D Series) x 626 finish
      2) 6 pin x Rim type x IC Core (Exit Device) x 626 finish
      3) 6 pin x 1-1/4" Mortise x IC Core (KR Mullions and CD) x 626 finish
   b. Furnish Schlage Padlocks and the cylinders to tie them into the master key system for gates, storage boxes, utility valve security, roof hatches and roll-up gates keyed as directed in the keying schedule.
      1) Furnish KS43D2200 padlock for use with non-I/C Schlage cylinders. Furnish 47- 413 (conventional) or 47-743-XP (PrimusXP) with above.
      2) Furnish KS43G3200 padlock for use with FSIC Schlage cylinders. Furnish 23-030 (Classic / Everest) or 20-740 (PrimusXP) with above.
      3) Furnish KS41D1200 padlock for use with SFIC Schlage cylinders. Furnish 80-037 (Everest-B) with above.
   c. Keyway: Provide as instructed by Owner during submittal process.

D. Keying Requirements:

1. Provide keyed construction cores and keys during the construction period.
   a. Provide full sized cylinders or brass construction cores and brass keys at all interior and exterior gates. Plastic cores are not permitted.
   b. Construction control and operating keys and core shall not be part of the Owner's permanent keying system or furnished in the same keyway or key section as the Owner's permanent keying system. Permanent cores and keys prepared according to the accepted keying schedule shall be furnished to the Owner.

2. Keying Meeting and Programming Schedule:
   a. Do not provide keying matrix in original hardware submittals. After hardware has been submitted and reviewed in accordance with Division 01 and Section 08 71 00 requirements, arrange a keying matrix/programming meeting with Owner Representative and the project hardware suppliers/vendors that is certified to assist the Owner Representative in developing cylinders/keying system based on reviewed submittals per below. Contract with a certified hardware suppliers/vendors/locksmith to perform the following tasks without the

design team or design consultants input. Keying meetings require confidentiality with no one outside these meetings knowing the District keying system.

1) Copies of all plans (pages with gate or gate numbers on them) shall be brought to the meeting with keyed gates highlighted for review (Contractor scope). After the meeting, provide the Owner Representative with both a scanned digital/PDF copy of the marked-up plans, as well as the original copies of the plans delivered to the District with meeting notes.
2) Copies of all reviewed gate, frame, gate, and hardware submittals shall be brought to the meeting with keyed gates highlighted for review (do not use the original specifications for keying meeting). After the meeting, provide the Owner Representative with both a scanned digital/PDF copy of any hardware submittal pages that have mark ups, as well as the original copies of the meeting's hardware submittal pages delivered to the Owner's Representative with meeting notes.
3) Follow procedures for keying meeting and programming schedule as outlined by the Gate Hardware Institute. DHI procedures are based on Gate Hardware Institute core class entitled Masterkeying class #AHC200.

b. Keying meeting to produce a programming schedule/matrix based on the following:
   1) Furnish keys in the following quantities (total quantity of keys part of bid package):
      a) 5 each Grand master-keys per set.
      b) 6 each Masterkeys per set.
      c) 3 each Change keys each lock, core, or cylinder.
      d) 5 each Permanent Extractor keys.
      e) 9 each Construction masterkeys.
      f) 2 each Construction Core Extractor keys.
   2) Provide keying system expansion parameters.
      a) Plan twenty changes directly under the grand.
      b) Plan ten master keys.
      c) Plan fifty changes each for each master.
   3) Permanent keys and cores shall be stamped with the applicable key mark for identification. The visual key control marks or codes shall not include the actual key cuts.
   4) Permanent keys shall be stamped "Do Not Duplicate".
c. Furnish typed programming meeting notes in PDF, editable electronic format as well as mailed, hard copy to Owner Representative (see above required PDF and hard-copy requirements).
d. Transmit pinned cores/cylinders as well as cut grand masterkeys, masterkeys, change keys, and other security keys to Owner Representative by Registered Mail, return receipt requested. All permanent cores and keys shall be sent directly from the factory to the Owner Representative for ID and verification.

3. Accompany Owner Representative to install permanent cylinders and/or cores:
   a. In above keying meeting, plan time to accompany Owner Representative/assist the installation process of permanent cores in contracted permanent locking or keying housings.
   b. Owner Representative and Contractor to agree on timeline when Owner Representative will have their completed pinned cores ready for installation.
   c. Contractor responsible to prepare locking systems, installation ready for final cores, free from dirt, debris or overtightening of locking devices that my cause binding of keyed devices.

d. On project walk to assist in permanent core install, Contractor responsible to un-install construction cores. Construction core devices are Contractor purchased and Contractor could keep or dispose of non-security construction cores.
e. Provide instructions for adjustments and maintenance of hardware and hardware finishes.

2.09 STOPS AND HOLDERS

A. Floor and Wall Gate Stops/Holders and Bumpers:

1. Acceptable Manufacturers:
   a. Ives Manufacturing.
   b. Triangle Brass Manufacturing Company, Inc. (Trimco).
   c. Rockwood.
   d. Hager Manufacturing.

2. Where hardware groups/sets have different information, refer to the following for clarification. Provide hardware groups/sets devices along with added devices as indicated on Drawings and detailed requirements for each type of device:
   a. Stops, Bumpers and/or Holders shall meet the requirements of BHMA A156.16, Grade 1.
   b. Provide required wall backing.

2.10 ACCESSORIES

A. Anti-Vandal Pulls:

1. Acceptable manufacturers.

   a. Ives Manufacturing.

   b. Triangle Brass Manufacturing Company, Inc. (Trimco).

B. Where hardware groups/sets have different information, refer to the following for clarification. Provide hardware groups/sets devices along with added devices as indicated on Drawings and detailed requirements for each type of device.

1. Coordinate length and sizes for hardware devices before ordering materials (verify the gate hardware is compatible for use with the gates and gate/frames). Protection plate example: LDW nomenclature in Part 3 means “less gate width”. A 48 inch wide gate would have a 46 inch wide protection plate. Width shall be one inch less than gate width unless gates have protective edge guards or center mullions. Coordinate before submittals.

C. Lock Guards:

1. Acceptable Manufacturers:
   a. Ives Manufacturing.
   b. Rockwood.
   c. Triangle Brass Manufacturing Company, Inc. (Trimco).

D. Gate Silencers:

1. Acceptable Manufacturers:
   a. Ives Manufacturing.

b. Triangle Brass Manufacturing Company, Inc. (Trimco).
c. Rockwood.
d. Hager Manufacturing.

E. Gates and Gate Hardware Accessories:

1. Provide welded astragals, lock patches (templates), and/or welded mounting devices required for a complete installation of specified hardware, whether or not shown on Drawings and details. Weld in accordance with manufacturer's recommendations. Provide devices ground smooth, prime and paint to match gate/fence system. See Section 09 91 00 for paint and primer requirements. Inserted pictures below are examples of lock patches and/or welded mounting devices. Template gates for each type of hardware device.

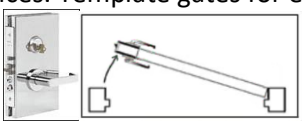

2. Gate Astragal:
   a. Provide fully welded astragal full height of gate to overlap either adjacent fence post or the adjacent gate at pair of gates.
      1) Provide full height astragal in width indicated on Drawings. If not indicated, provide astragal width no less than 2 inches wide. See inserted picture below.
      2) Provide full height astragal overlap width per details. If not indicated, provide overlap of astragal no less than 3/4 inch wide.
      3) Provide 1/8 inch astragal thickness. See inserted picture below.
      4) Where Pemko Manufacturing 357 Series astragal is utilized by gate manufacturer, do not use screws or order with screw holes. Nomenclature: ND prefix or suffix required by Pemko on 357 Series astragal.

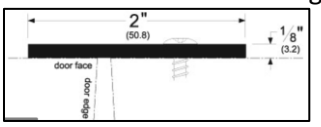

   b. Provide devices ground smooth and painted to match gate/fence system. See Section 09 91 00 for paint and primer requirements.

3. Gate Canebolts:
   a. Where nomenclature or device "524 Series" non-padlock canebolt-type devices are specified in hardware group/sets, provide by Crown Industrial, South San Francisco, CA; (650) 952-5150; http://www.crown-industrial.com/, or accepted equal.
   b. Where nomenclature or device "stock #0524PL and/or part #0000478" series padlockable canebolt-type devices are specified in hardware group/sets, provide series by Crown Industrial, South San Francisco, CA; (650) 952-5150; http://www.crown-industrial.com/, or accepted equal.
   c. On pairs of gates that have ingress or egress lever trim and or exit/panic device push-pad trim on active side gate, install canebolt away from the gate edge so that both the canebolt and supplied the padlock cannot not impede the active gate from opening at any time, providing free egress. No cane bolt at active leaf or exit or ingress gate unless it is fully automatic and opens with the same motion that releases the latch.
   d. Provide compatible galvanized steel pipe canebolt receptor and strike plate mounted in concrete slab as required.

1) At padlockable canebolts, provide sufficient canebolt receptor depth to enable use of padlock.
2) Provide canebolt receptors at both closed position of gate and open position of gate at 90 degrees, unless shown differently on Drawings.

e. Canebolts shall be mounted and welded in accordance with manufacturer's recommendations.
1) Coordinate with other welding requirements in Contract Documents.
2) Provide devices ground smooth and painted to match gate/fence system. See Section 09 91 00 for paint and primer requirements.

2.11 POWER SUPPLIES, ELECTRIFIED HARDWARE, AND WIRES

A. Power Supplies, Wires, and Relays:

1. Where hardware groups/sets have different information (number of hinge wires and power supply information), refer to the following specifications for clarification and submit according to complete and intended electrified system per Contract Documents. See Architectural and Security drawings and specifications.
a. Coordinate use of power supplies with gate and frame locations. Provide power supplies, relay, and battery backup units as part of the overall system in accordance with the manufacturer's warranty and system requirements. UL listed for applicable use; housed in an accepted enclosure; and provide both Class 1 and Class 2 outputs. At all gates with electric locking devices, if a power supply is not specified in the hardware set (Part 3 below).
b. Output shall be filtered and regulated. Relay, timer, and logic modules shall be provided as required for interface to indicated security components, and shall be assembled, connected, and fully contained within the power supply enclosure.

PART 3 - EXECUTION

3.01 EXAMINATION

A. Examine gates and frames and verify mounting locations as indicated on shop drawings.

B. Report unacceptable conditions to the Architect. Begin installation only when unacceptable conditions have been corrected.

3.02 INSTALLATION

A. Install in accordance with manufacturer's printed instructions and accepted shop drawings.

B. Gate-Floor Clearances:

1. Unless otherwise shown, provide the following gate-floor clearances:
a. Maximum 3/8 inch.

C. Hardware Placement:

1. Unless otherwise shown or required by CBC 2022, ADA - 2010 Standards for Accessible Design and/or Title 24, place hardware at the following heights:

a. Hinges: Gate and frame manufacturer's standard scope per additional specifications and plans.
b. Lever handles for latchsets, lockset and panic/exit device pull, lever trim:
   1) 38 inches above finish floor/surface.
   2) Verify manufacturer's template with gate design.
c. Panic devices push bar:
   1) Panic hardware shall be so mounted / centered between 36 inches and 44 inches above finished floor or ground.
   2) Verify manufacturer's template with gate design to meet CBC 2022 exterior, pull side trim.
d. Closers:
   1) To meet opening force requirements
   2) See installation below.

2. Hardware for gate handles, pulls, latches, locks, and other operating devices for use on means of egress gates shall comply with SFM Standard 12-10-2, Section 12-10-202 as contained in CCR Title 24, Part 12.

D. Installation:

1. Except for hinges, do not install hardware until painting and finishing work is completed.
2. Pre-drill pilot holes in wood for screws. Drill and tap for surface mounted hardware on metal.
3. Hinges: Set hinges snug and flat in mortises. Hand turn screws to flat seat – do not drive.
4. Locksets: Install locks with keyways in proper position. Install levers, roses, and escutcheons firmly affixed.
5. Closers:
   a. To meet non-rated opening/exterior opening force requirements as well as close and latch non-smoke non-fire rated gates:
      1) Closers are to be installed as close to the hinge side of gate as possible by a trained installer per this Section, Part 1 "Quality Assurance, Installer Qualifications", installer an authorized representative of manufacturers, minimum of five years successful experience installing closers to meet 5-pound opening force for gate complexity".
      2) For non-smoke or non-fire rated gates, before installation of closers install one mockup gate for each kind of closer application. Example: parallel, regular arm, stop arm and/or top-jamb arm application if specified. Confirm gates meet 5-pound opening force and still close gate. This will ensure proper installation for gates to open at 5 pounds opening force before remaining non-rated opening closers are installed. The closer the closer is installed to the hinge, the better performance for 5 pound opening force, but still close and latch gate.
   b. Mount gate closers for maximum swing to meet 5-pound opening force. At all possible openings, mount gate closers for maximum swing of gate before setting stops.
   c. Mount gate closers for maximum swing, but at gates to meet 5-pound opening force. Drawings may show gates open to only 90 degrees (Revit or CAD system set up), but unless noted or specified with limiter (stop arm devices below), all gates to open for maximum swing against adjacent 180 wall if nothing inhibits gate from doing so. Include wide-throw hinges per specs and installation for 170 degree to180 degree or maximum swing of gate before installing stops.

6. Floor Stops: See notes on closers and hinges above. After closer devices are installed, and gate is opened as far as possible without #1) occupant excessive force on closer arm for CUSH arms;

and #2) gate does not hit adjacent wall or other surfaces, stops shall be installed at substantial completion a maximum of 4 inches from adjacent walls and as far away from the hinge point as possible. Preference is to have stops installed just below lever or pull locations.

7. Silencers: Set in place before adjusting strikes.

3.03 PAINT OR FIELD FINISHES

A. Coordinate with Contact Documents including, but not limited to, Section 09 91 00 for paint and primer requirements.

3.04 ADJUSTING

A. Adjust parts for smooth, uniform operation.

B. Lubricate moving parts with manufacturer recommended lubricant.

C. Replace units that cannot be adjusted and lubricated to operate freely and smoothly as intended for the application.

D. Adjust gate closer devices:

1. Adjust closer operating.

a. Gates: not to exceed 5.0 pounds force.

2. Adjust closer delay and operating speeds to comply with requirements of 2022 CBC Section 11B-404.2.8.1 and ADA – Americans with Disabilities Act - 2010 Standards for Accessible Design.

a. Gates/gates closers, when provided, shall have sweep period adjusted: minimum of 5 seconds for a gate/gate to close from the 90-degree position to the 12-degree position.

b. Gates/gates with spring hinges require a minimum of 1.5 seconds to close from the 70 degree to the closed position.

3.05 CLEANING

A. Clean as recommended by manufacturer. Do not use materials or methods which may damage finish or surrounding construction.

3.06 HARDWARE SCHEDULE

A. Manufacturers Legend:

Code	Name
IV	Ives Manufacturing
AD	Adams Rite Manufacturing
SC	Schlage Manufacturing
VO	Von Duprin Manufacturing
LC	LCN Closers
PE	Pemko Manufacturing
TR	Trimco Manufacturing
AB	ABH Manufacturing
LO	Locinox (Mammoth Hinges)

TO	TORXUN Manufacturing
RX	Rixson Manufacturing

B. Hardware Columns - Example (Legend):

Qty	Device Description	Device # (include specification language)	Finish	Manu
1	- - - - - - - - - - - -	- - - - - - - - - - - - - - - - - -	- -	- -

C. The following hardware sets are intended to establish type and standard of quality when used together with the requirements of this Section (see above Section and related Sections including Division 01). Examine Contract Documents and furnish proper hardware for gate openings. Refer to Gate Schedule on the Drawings for Hardware Group/Set assignments for each opening.

Hardware Sets (Typically Three-Digit Set Numbers)

Hardware Group/Set #101

1	Set	Hydraulic Closers / Hinges Sets	Mammoth 180 Hydraulic Closers/Hinges Set: Ultra heavy duty 180 degree hydraulic gate closer and hinge for gates up to 440 pounds x Silver Finish Note: if round post similar to chain-link, provide additional Locinox brackets part #CLB Mammoth. 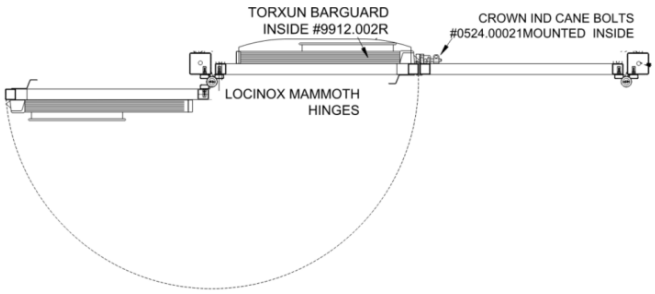		
1	Ea.	Electrified Power Transfer	#798C-12 - 12" x 1 ⁄2" with four 20 gauge, 20” long conductor wires (red, green, white, black) by Schlage	630	SC
1	Ea.	Rim-Type Exit/Panic Device x Key Override	#WP-RX WH-LD-AX-PA-99NL x 110NL-MD x welded templated for devices including, but limited to, custom strike or mount with weldable box as required for panic device and strike templates.	626	VO
1	Ea.	Anti-Vandal Pulls	VR910NL series (coordinate with 99NL x 110NL)	630	IV
1	Ea.	Electric Strike, Electrified Power Transfer and Power Supply	Furnish and install #1) single gang power drop for below power supply located inside building (not wet space); #2) provide power supply #PS902 by Schlage; #3) run conduit from ground through inactive HSS or chainlink post/ framing system and complete wiring as required to meet manufacturer warranties; #4) provide Schlage manufacturing #798C-12 in 630 finish (conduit then to be run horizontally across inactive leaf to the electric strike); #4) provide HES manufacturing surface mount #9600 in 630 stainless steel finish; #5) In shop drawings provide detail to show how to install electric strike to not catch clothing (example only drawing here showing active leaf rim-latch latching into inactive leaf 9600 electric strike) 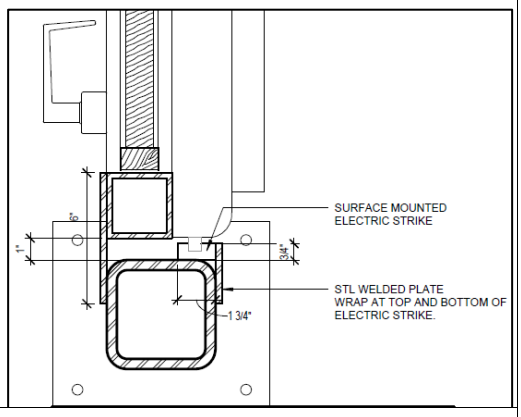		
1	Ea.	Bar Guard (inside)	TORXUN Guard (inside) Part #9912.002R – see www.torxun.com part #9912.001R (or equal devices as required by architectural details, and language in Section 08 71 00)		
1	Ea.	I/C Cylinders (Rim or Mortise)	20-057 or 20-061 x appropriate cam x blocking rings as required (rim or mortise type and quantity as required by locking device)	626	SC
1	Ea.	Permanent Core	non-I/C #20-750 or 20-765-XP per above what # needed to be for exterior-side of locks to have Primus (Exterior)	626	SC

1	Ea.	Stop and Hold Open	1804	630	AB
1	Ea.	Bottom of gates to be greater than 10” Clear, Unobstructed and Smooth Surface	Per above specifications and by gate manufacturer (push-side, ground smooth, primed, and painted to match gate).		
1	Ea.	Painted Full Height Astragal	Per above specifications and by gate manufacturer and per specifications (utilized as a positive stop – when gate closes against the astragals the opening cannot swing back in toward the egress side)		
1	Ea.	Coordination task for security and/or electrical design and additional non-Division 08 Section scope including, but not limited to, wire / connectivity from ground through frame to electrified hardware.	By security or electrical as required per Contract Documents: The electrified hardware specified above can be utilized for #1) non-card reader, remote access control applications (unlocked / locked remotely for open during business hours / locked after-hours) and #2) local card readers at openings as directed by architectural drawings, security or electrical. Coordinate with security or electrical Divisions 26-28 and applicable drawings as hardware does not include card reader locations.		
1	Ea.	Fire Control Key Boxes/Product	At gate #G002 only furnish and install Knox Box 3200 Series (no Knox Box at other openings assigned the set)		
Furnish all devices and components for hardware groups/set above in accordance with Contract Documents including, but not limited to, additional hardware devices required in Section 08 71 00 language, architectural plans, and full specification documents.					

Blank space below and after a Group/Set is intentional to avoid, if possible, splitting a Hardware Group/Set onto two pages

Hardware Group/Set #102

4	Ea.	Gate Hinge/Hanging Devices (Precision Engineered High Capacity by Crown industrial manufacturing or approved equal manufacturer and type)	Surface x surface (CBI-8505) or full mortise (CBI-8508) as required per details, final to be selected (final quantity per manufacturer's recommendations). 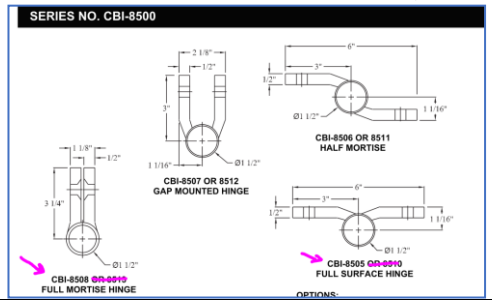		CR
2	Ea.	Lockable Canebolt-Type Devices	0524PL and/or part #0000478 x 24"x black zinc x Stainless Steel Ground Receiver/Strike		CR
2	Ea.	Padlocks	KS43D2200		SC
2	Ea.	Permanent Core	23-030	626	SC

Hardware Group/Set #103

4	Ea.	Gate Hinge/Hanging Devices (Precision Engineered High Capacity by Crown industrial manufacturing or approved equal manufacturer and type)	Surface x surface (CBI-8505) or full mortise (CBI-8508) as required per details, final to be selected (final quantity per manufacturer's recommendations). 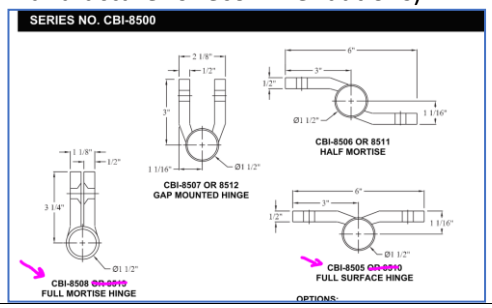		CR
_	Ea.	Gate Hinge/Hanging Devices	Hanging device hardware by chain-link gate manufacturer		
2	Ea.	Padlocks	KS43D2200		SC
2	Ea.	Permanent Core	23-030	626	SC
1	Ea.	Fire Control Key Boxes/Product	Knox Box 3200 Series (no Knox Box at other openings assigned the set)		

Blank space below and after a Group/Set is intentional to avoid, if possible, splitting a Hardware Group/Set onto two pages

Hardware Group/Set #104

2	Ea.	Hydraulic Closers / Hinges Sets	Mammoth 180 Hydraulic Closers/Hinges Set: Ultra heavy duty 180° hydraulic gate closer and hinge for gates up to 440 pounds x Silver Finish (Note: if round post similar to chain-link, provide additional Locinox brackets part #CLB Mammoth)		LO
1	Ea.	Inactive Leaf: Lockable Canebolt-Type Devices	0524PL and/or part #0000478 x 24”x black zinc x Stainless Steel Ground Receiver/Strike (same as above do not install canebolt in a way that would inhibit free egress on lever hardware active gate)		CR
1	Ea.	Padlock	KS43F320 (2” inch shackle per above to not inhibit free egress)		SC
1	Ea.	Security Classroom-Type Lockset	ND98TD RHO X 10-025 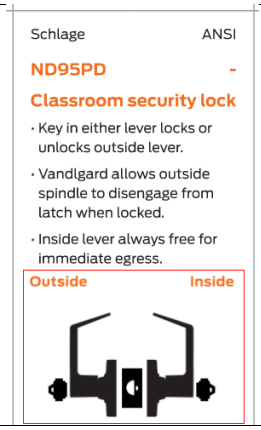	626	SC
1	Ea.	Active Leaf: Lock Guard (inside)	TORXUN manufacturing part #9912.001R (or equal devices as required by architectural details, and language in Section 08 71 00)		TO
1	Ea.	Both Leafs: Permanent Core	non-I/C #20-750 or 20-765-XP per above what # needed to be for exterior-side of locks to have Primus (Exterior and Padlock core)	626	SC
1	Ea.	Stop	1209	630	TR
1	Ea.	Stop and Hold Open	1804	630	AB
2	Ea.	Bottom of doors to be greater than 10” Clear, Unobstructed and Smooth Surface	Per above specifications and by gate manufacturer (push-side, ground smooth, primed, and painted to match gate).		
1	Ea.	Painted Full Height Astragal	Per above specifications and by gate manufacturer and per specifications (utilized as a positive stop – when gate closes against the astragals the opening cannot swing back in toward the egress side)		
Note: Furnish all devices and components for hardware groups/set above in accordance with Contract Documents including, but not limited to, additional hardware devices requirements in the above specification language, architectural plans, and full specification documents.					

Blank space below and after a Group/Set is intentional to avoid, if possible, splitting a Hardware Group/Set onto two pages

Hardware Group/Set #105

1	Ea.	Hydraulic Closers / Hinges Sets	Mammoth 180 Hydraulic Closers/Hinges Set: Ultra heavy duty 180 degree hydraulic gate closer and hinge for gates up to 440 pounds x Silver Finish (Note: if round post similar to chain-link, provide additional Locinox brackets part #CLB Mammoth) 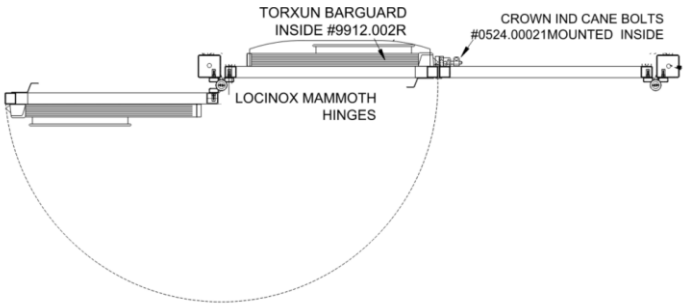 		LO
1	Ea.	Rim-Type Exit/Panic Device x Anti-Vandal Pull Key Override	#WP-WH-CD-AX-PA-99NL x 110NL-MD x welded templated for devices including, but limited to, custom strike or mount with weldable box as required for panic device and strike templates.	626	VO
1	Ea.	Anti-Vandal Pulls	VR910NL series (coordinate with 99NL x 110NL)	630	IV
1	Ea.	Strikes and Weldable Boxes. Template as required by all furnished hardware, see 08 71 00 Part 1 for templating requirements and full specs which call for fully welded, no seams, ground smooth, prime and finishes per architectural drawings and welding/paint specifications.	Furnish and install: #1) Welded, templated areas for devices. Requires 1-3/4" thick gate stile and/or boxes as required where device is installed. Templates to have custom welded areas preferred yet contact technicians at www.keedex.com for alternate weldable boxes if necessary - means and methods no-designer, show detailed templating in submittals and shop drawings. #2) Provide welded areas and brackets as required for condition for either special strike #1609 or combo devices #050996 strike bracket with 299F (means and methods no-designer, show detailed templating in submittals and shop drawings). 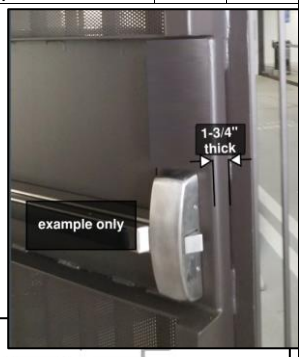 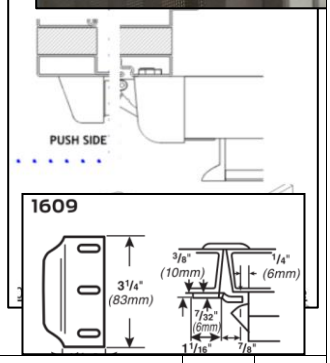 		
1	Ea.	I/C Cylinders (Rim or Mortise)	20-057 or 20-061 x appropriate cam x blocking rings as required (rim or mortise type and quantity as required by locking device)	626	SC
1	Ea.	Permanent Core	non-I/C #20-750 or 20-765-XP per above what # needed to be for exterior-side of locks to have Primus (Exterior)	626	SC
1	Ea.	Auxiliary Floor Stop	FS18L (see Section 08 71 00, Part 3 installation)	630	IV
1	Ea.	Bar Guard (inside)	TORXUN Guard (inside) Part #9912.002R		TO

1	Ea.	Bottom of gates to be greater than 10” Clear, Unobstructed and Smooth Surface	Per above specifications and by gate manufacturer (push-side, ground smooth, primed, and painted to match gate).
1	Ea.	Painted Full Height Astragal	Per above specifications and by gate manufacturer and per specifications (utilized as a positive stop – when gate closes against the astragals the opening cannot swing back in toward the egress side)
Note: Furnish all devices and components for hardware groups/set above in accordance with Contract Documents including, but not limited to, additional hardware devices requirements in the above specification language, architectural plans, and full specification documents.			

Blank space below and after a Group/Set is intentional to avoid, if possible,
splitting a Hardware Group/Set onto two pages

Hardware Group/Set #106

1	Ea.	Hydraulic Closers / Hinges Sets	Mammoth 180 Hydraulic Closers/Hinges Set: Ultra heavy duty 180 degree hydraulic gate closer and hinge for gates up to 440 pounds x Silver Finish (Note: if round post similar to chain-link, provide additional Locinox brackets part #CLB Mammoth) 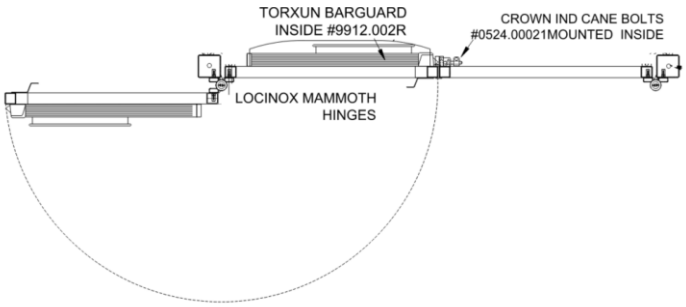 		LO
1	Ea.	Rim-Type Exit/Panic Device x Anti-Vandal Pull Key Override	#WP-WH-LD-AX-PA-99NL x 110NL-MD x welded templated for devices including, but limited to, custom strike or mount with weldable box as required for panic device and strike templates.	626	VO
1	Ea.	Anti-Vandal Pulls	VR910NL series (coordinate with 99NL x 110NL)	630	IV
1	Ea.	Strikes and Weldable Boxes. Template as required by all furnished hardware, see 08 71 00 Part 1 for templating requirements and full specs which call for fully welded, no seams, ground smooth, prime and finishes per architectural drawings and welding/paint specifications.	Furnish and install: #1) Welded, templated areas for devices. Requires 1-3/4" thick gate stile and/or boxes as required where device is installed. Templates to have custom welded areas preferred yet contact technicians at www.keedex.com for alternate weldable boxes if necessary - means and methods no-designer, show detailed templating in submittals and shop drawings. #2) Provide welded areas and brackets as required for condition for either special strike #1609 or combo devices #050996 strike bracket with 299F (means and methods no-designer, show detailed templating in submittals and shop drawings). 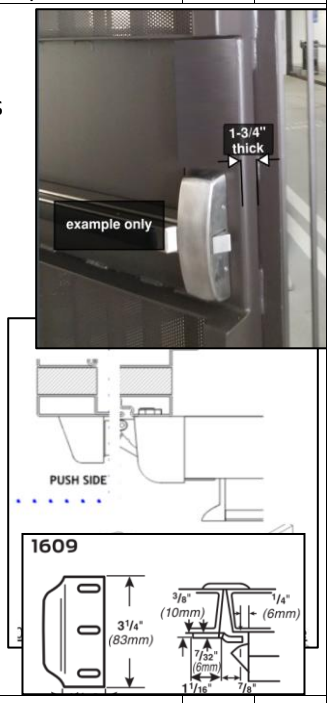 		
1	Ea.	I/C Cylinders (Rim or Mortise)	20-057 or 20-061 x appropriate cam x blocking rings as required (rim or mortise type and quantity as required by locking device)	626	SC
1	Ea.	Permanent Core	non-I/C #20-750 or 20-765-XP per above what # needed to be for exterior-side of locks to have Primus (Exterior)	626	SC
1	Ea.	Auxiliary Floor Stop	FS18L (see Section 08 71 00, Part 3 installation)	630	IV
1	Ea.	Bar Guard (inside)	TORXUN Guard (inside) Part #9912.002R		TO

1	Ea.	Bottom of gates to be greater than 10” Clear, Unobstructed and Smooth Surface	Per above specifications and by gate manufacturer (push-side, ground smooth, primed, and painted to match gate).
1	Ea.	Painted Full Height Astragal	Per above specifications and by gate manufacturer and per specifications (utilized as a positive stop – when gate closes against the astragals the opening cannot swing back in toward the egress side)
Note: Furnish all devices and components for hardware groups/set above in accordance with Contract Documents including, but not limited to, additional hardware devices requirements in the above specification language, architectural plans, and full specification documents.			

Blank space below and after a Group/Set is intentional to avoid, if possible,
splitting a Hardware Group/Set onto two pages

Hardware Group/Set #107

1	Set	Hydraulic Closers / Hinges Sets	Mammoth 180 Hydraulic Closers/Hinges Set: Ultra heavy duty 180 degree hydraulic gate closer and hinge for gates up to 440 pounds x Silver Finish (Note: if round post similar to chain-link, provide additional Locinox brackets part #CLB Mammoth) 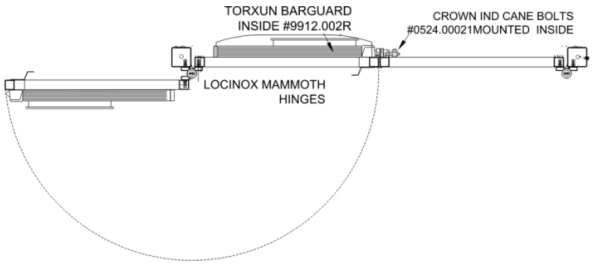		
1	Ea.	Security Double-Storeroom-Type Lockset	ND82TD RHO X 10-025 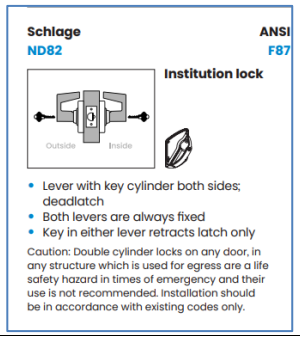	626	VO
1	Ea.	I/C Cylinders (Rim or Mortise)	20-057 or 20-061 x appropriate cam x blocking rings as required (rim or mortise type and quantity as required by locking device)	626	SC
1	Ea.	Permanent Core	non-I/C #20-750 or 20-765-XP per above what # needed to be for exterior-side of locks to have Primus (Exterior)	626	SC
1	Ea.	Stop	1209	630	TR
1	Ea.	Bottom of gates to be greater than 10” Clear, Unobstructed and Smooth Surface	Per above specifications and by gate manufacturer (push-side, ground smooth, primed, and painted to match gate).		
1	Ea.	Painted Full Height Astragal	Per above specifications and by gate manufacturer and per specifications (utilized as a positive stop – when gate closes against the astragals the opening cannot swing back in toward the egress side)		
1	Ea.	Coordination task for security and/or electrical design and additional non-Division 08 Section scope including, but not limited to, wire / connectivity from ground through frame to electrified hardware.	By security or electrical as required per Contract Documents: The electrified hardware specified above can be utilized for #1) non-card reader, remote access control applications (unlocked / locked remotely for open during business hours / locked after-hours) and #2) local card readers at openings as directed by architectural drawings, security or electrical. Coordinate with security or electrical Divisions 26-28 and applicable drawings as hardware does not include card reader locations.		
Furnish all devices and components for hardware groups/set above in accordance with Contract Documents including, but not limited to, additional hardware devices required in Section 08 71 00 language, architectural plans, and full specification documents.					

Hardware Group/Set #108

_	Ea.	Gate Hinge/Hanging Devices	By security gate manufacturer		
1	Ea.	Latching Device	By security gate manufacturer		
2	Ea.	Cane Bolts	By security gate manufacturer		
3	Ea.	Padlocks	KS43D2200		SC
3	Ea.	Permanent Core	23-030	626	SC

END OF SECTION

SECTION 09 91 00

PAINTING

PART 1 - GENERAL

1.01 SECTION INCLUDES

A. Surface preparation and field painting of existing exterior decorative metal fencing.

1.02 RELATED SECTIONS

A. The General Conditions, Supplementary Conditions and Division 01 are fully applicable to this Section, as if repeated herein.

1.03 REFERENCES

A. ASTM International (ASTM): ASTM D 16 - Standard Terminology for Paint, Related Coatings, Materials, and Applications.

B. Steel Structures Painting Council (SSPC) SP6 - Commercial Blast Cleaning Procedures.

C. Steel Structures Painting Council (SSPC) SP10 - Near White Blast Cleaning Procedure.

1.04 DEFINITIONS

A. General: Standard coating terms defined within Masters Painters Institute (MPI) manual.

1. Gloss level 1 - Flat with a gloss range below 5 when measured at a 60-degree meter and 10 when measured at an 85-degree meter.
2. Gloss level 2 - Low Sheen with a gloss range of 5 to 10 when measured at a 60 degree meter and 10 to 35 when measured at an 85 degree meter.
3. Gloss level 3 - Eggshell with a gloss range between 10 and 15 when measured at a 60-degree meter and 10 to 35 when measured at an 85-degree meter.
4. Gloss level 4 - Satin with a gloss range between 25 to 35 when measured with a 60 degree meter.
5. Gloss level 5 - Semi-Gloss with a gloss range between 50 and 55 when measured at a 60 degree meter.
6. Gloss level 6 - Gloss with a gloss range more than 70 when measured at a 60 degree meter.

1.05 SUBMITTALS

A. General: Submit in accordance with Conditions of the Contract and Division 01 Specification sections.

B. Product Data: Manufacturer's data sheets on each product to be used, including:

1. Material List: An inclusive list of required coating materials. Indicate each material and cross-reference specific coating, finish system, and application. Identify each material by manufacturer's catalog number and general classification.
2. Preparation instructions and recommendations.

3. Manufacturer's Information: Manufacturer's technical information, including label analysis and instructions for handling, storing, and applying each coating material.

C. Selection Samples: For each finish product specified, two complete sets of color chips representing manufacturer's full range of available colors and patterns.

D. Verification Samples: For each finish product specified, two samples, minimum size 6 inches (150 mm) square, representing actual product, color, and patterns.

1.06 QUALITY ASSURANCE

A. Installer Qualifications: A firm or individual experienced in applying paints and coatings similar in material, design, and extent to those indicated for this Project, whose work has resulted in applications with a record of successful in-service performance.

B. Paint Exposed Surfaces: If an item or a surface is not specifically mentioned, paint the item, or surface the same as similar adjacent materials or surfaces. If a color of finish is not indicated, Architect will select from standard colors and finishes available.

C. Mock-Up: Provide a mock-up for evaluation of surface preparation techniques and application workmanship.

1. Finish areas designated by Architect.
2. Do not proceed with remaining work until workmanship, color, and sheen are approved by Architect.
3. Refinish mock-up area as required to produce acceptable work.

1.07 DELIVERY, STORAGE, AND HANDLING

A. Deliver materials to Project site in manufacturer's original, unopened packages and containers bearing manufacturer's name and label:

B. Store materials not in use in tightly covered containers in a well-ventilated area at a minimum ambient temperature of 45 deg F (7 deg C). Maintain storage containers in a clean condition, free of foreign materials and residue.

C. Maintain environmental conditions (temperature, humidity, and ventilation) within limits recommended by manufacturer for optimum results. Do not install products under environmental conditions outside manufacturer's absolute limits.

D. Apply waterborne paints only when temperatures of surfaces to be painted and surrounding air are between 50 and 90 deg F (10 and 32 deg C), unless manufacturer's instructions specifically states otherwise.

E. Apply solvent-thinned paints only when temperatures of surfaces to be painted and surrounding air are between 45 and 95 deg F (7 and 35 deg C).

F. Do not apply paint in snow, rain, fog, or mist; or when relative humidity exceeds 85 percent; or at temperatures less than 5 deg F (3 deg C) above the dew point; or to damp or wet surfaces.

1.08 EXTRA MATERIALS

A. Furnish extra paint materials from the same production run as the materials applied and, in the quantities, described below. Package with protective covering for storage and identify with labels describing contents. Deliver extra materials to Owner.

B. Quantity: Furnish Owner with an additional three percent, but not less than 1 gal (3.8 l) or 1 case, as appropriate, of each material and color applied.

PART 2 - PRODUCTS

2.01 MANUFACTURERS

A. Acceptable Manufacturer: Dunn Edwards Paints.

B. Requests for substitutions will be considered in accordance with provisions of Section 01 60 00.

2.02 PAINT MATERIALS – GENERAL

A. Material Compatibility: Provide primers and finish-coat materials that are compatible with one another and with the substrates indicated under conditions of service and application, as demonstrated by manufacturer based on testing and field experience.

B. VOC Classification: Provide materials, including primers, undercoats, and finish-coat materials, which meet local air quality management district regulations.

C. Colors: As selected by Architect.

D. Application Rate: Coating thickness for primer, intermediate, barrier and finish coats shall be measured as Dry Film Thickness (DFT) and comply with manufacturer's published recommendations.

2.03 Exterior Paint Systems

A. Metal Fencing and Gates and Railings:

1. Prime Coat: For Ferrous Metal- DE Enduraprime High Performance Acrylic Metal Primer and for Galvanized Metal – DE Ultra-Shield Galvanized Metal Primer
2. 2nd Coat: DE Aristoshield Water Based Urethane Alkyd Semi-Gloss Enamel
3. 3rd Coat: DE Aristoshield Water Based Urethane Alkyd Semi-Gloss Enamel

PART 3 - EXECUTION

3.01 EXAMINATION

A. Do not begin application until substrates have been properly prepared.

B. If substrate preparation is the responsibility of another installer, notify Architect of unsatisfactory preparation before proceeding.

C. Coordination of Work: Review other Sections in which primers are provided to ensure compatibility of the total system for various substrates. On request, furnish information on characteristics of finish materials to ensure use of compatible primers.

1. Notify Architect about anticipated problems when using the materials specified over substrates primed by others.
2. If a potential incompatibility of primers applied by others exists, obtain the following from the primer Applicator before proceeding:

a. Confirmation of primer's suitability for expected service conditions.
b. Confirmation of primer's ability to be top coated with materials specified.

3.02 PREPARATION

A. General: Remove items already installed that are not to be painted. If removal is impractical or impossible because of size or weight of the item, provide surface-applied protection before surface preparation and painting.

1. After completing painting operations in each space or area, reinstall items removed using workers skilled in the trades involved.

B. Cleaning: Before applying paint or other surface treatments, clean substrates of substances that could impair bond of the various coatings. Remove oil and grease before cleaning.

1. Schedule cleaning and painting so dust and other contaminants from the cleaning process will not fall on wet, newly painted surfaces.

C. Surface Preparation: Clean and prepare surfaces to be painted according to manufacturer's written instructions for each particular substrate condition and as specified.

1. Provide barrier coats over incompatible primers or remove and reprime.
2. Provide barrier coats over incompatible primers or remove primers and reprime substrate.
3. Ferrous-Metal Substrates: Clean ungalvanized ferrous-metal surfaces that have not been shop coated; remove oil, grease, dirt, loose mill scale, and other foreign substances. Use solvent or mechanical cleaning methods that comply with SSPC recommendations.

a. Blast-clean steel surfaces as recommended by coating manufacturer and according to SSPC-SP 10.
b. Treat bare and sandblasted or pickled clean metal with a metal treatment wash coat before priming.
c. Touch up bare areas and shop-applied prime coats that have been damaged. Wire brush, solvent clean, and touch up with same primer as the shop coat.

4. Nonferrous-Metal Substrates: Clean nonferrous and galvanized surfaces according to manufacturer's written instructions for the type of service, metal substrate, and application required.

a. Remove pretreatment from galvanized sheet metal fabricated from coil stock by mechanical methods.

D. Material Preparation: Carefully mix and prepare coating materials according to manufacturer's written instructions.

1. Maintain containers used in mixing and applying coatings in a clean condition, free of foreign materials and residue.
2. Stir materials before applying to produce a mixture of uniform density. Stir as required during application. Do not stir surface film into the material. Remove film and, if necessary, strain coating material before using.
3. Use only the type of thinners approved by manufacturer and only within recommended limits.
4. Tinting: Tint each undercoat a lighter shade to simplify identification of each coat when multiple coats of same material are applied. Tint undercoats to match the color of the finish coat but provide sufficient differences in shade of undercoats to distinguish each separate coat.

3.03 APPLICATION

A. General: Apply paint according to manufacturer's written instructions. Use applicators and techniques best suited for substrate and type of material being applied.

B. General: Apply high-performance coatings according to manufacturer's written instructions.

1. Use applicators and techniques best suited for the material being applied.
2. Do not apply high-performance coatings over dirt, rust, scale, grease, moisture, scuffed surfaces, or conditions detrimental to forming a durable coating film.
3. Coating surface treatments, and finishes are indicated in the coating system descriptions.
4. Provide finish coats compatible with primers used.

C. Application Procedures: Apply coatings by spray method of application.

1. The number of coats and film thickness required is the same regardless of application method.
2. Completed Work: Match approved Samples for color, texture, and coverage. Remove, refinish, or recoat work that does not comply with specified requirements.

3.04 FIELD QUALITY CONTROL

A. Owner reserves the right to invoke the following test procedure at any time and as often as Owner deems necessary during the period when paint is being applied:

1. Owner will engage a qualified independent testing agency to sample paint material being used. Samples of material delivered to Project will be taken, identified, sealed, and certified in the presence of Contractor.
2. Owner may direct Contractor to stop painting if test results show material being used does not comply with specified requirements. Contractor shall remove non-complying paint from Project site, pay for testing, and repaint surfaces previously coated with the non-complying paint. If necessary, Contractor may be required to remove non-complying paint from previously painted surfaces if, on repainting with specified paint, the two coatings are incompatible.

3.05 CLEANING

A. After completing painting, clean glass and paint-spattered surfaces. Remove spattered paint by washing and scraping without scratching or damaging adjacent finished surfaces.

3.06 PROTECTION

A. Protect work of other trades, whether being painted or not, against damage from painting. Correct damage by cleaning, repairing, or replacing, and repainting, as approved by Architect.

B. Provide "Wet Paint" signs to protect newly painted finishes. After completing painting operations, remove temporary protective wrappings provided by others to protect their work.

C. After work of other trades is complete, touch up and restore damaged or defaced painted surfaces.

END OF SECTION

SECTION 27 00 00
COMMUNICATIONS BASIC REQUIREMENTS

PART 1 - GENERAL

1.01 SUMMARY

A. This Section specifies the common administration basic requirements and common methods for all low voltage systems installation work included under Division 27 and 28 (and other Divisions). Where those requirements differ from the requirements of this section, the more stringent shall govern.

1.02 STANDARDS, REGULATIONS, AND CODES REFERENCES

A. The following Standards, Regulations and Codes apply to work specified in the Contract Documents.
   1. Applicable State and Local Codes.
   2. California Building Code and California Electrical Code, Current Editions.
   3. BICSI TDMM (Telecommunications Distribution Methods Manual), 11th Edition 2006.
   4. ANSI/TIA/EIA-568-B.1. Commercial Building Telecommunications Cabling Standard,
   5. ANSI/TIA/EIA-568-B.1-2. Commercial Building Telecommunications Cabling Standard, Part 1: General Requirements, Addendum 2, Grounding and Bonding Specifications for Screened Balanced Twisted-Pair Horizontal Cabling.
   6. ANSI/TIA/EIA-568-B.1-3. Commercial Building Telecommunications Cabling Standard.
   7. ANSI/TIA/EIA-568-B.1-4. Commercial Building Telecommunications Cabling Standard, Part 1: General Requirements, Addendum 4, Recognition of Category 6 and Category Cat 6A and 50 nm Laser-Optimized 50/125 um Multimode Optical Fiber Cabling.
   8. ANSI/TIA/EIA-568-B.1-2. Commercial Building Telecommunications Cabling Standard, Part 2: Balanced Twisted-Pair Cabling Components.
   9. ANSI/TIA/EIA-568-B.2-1. Commercial Building Telecommunications Cabling Standard, Part 2: Balanced Twisted-Pair Cabling Components, Addendum 1, Transmission Performance Specifications for 4-Pair 100 Ohm Category 6 Cabling.
   10. ANSI/TIA/EIA-568-B.2-10 (draft 2.0). Commercial Building Telecommunications Cabling Standard, Part 2: Balanced Twisted-Pair Cabling Components, Addendum 10, Transmission Performance Specifications for 4-Pair 100 Ohm Augmented Category 6 Cabling.
   11. ANSI/TIA/EIA-568-B3.3 Optical Fiber Cabling Components Standard.
   12. TIA-569-B. Commercial Building Standard for Telecommunications Pathways and Spaces.
   13. ANSI/TIA/EIA-606-A. Administration Standard for Commercial Telecommunications Infrastructure.
   14. ANSI/TIA/EIA-607-A. Commercial Building Grounding (Earthing) and Bonding Requirements for Telecommunications.
   15. TIA/EIA TSB-67 Transmission Performance Specifications for Field Testing of Unshielded Twisted-Pair Cabling Systems.

16. TIA/EIA TSB-72 Centralized Optical Fiber Cabling Guidelines.

1.03 DEFINITIONS

A. The following is a list of abbreviations generally used in Divisions 27 & 28:
   1. ADA - Americans with Disabilities Act
   2. AHJ - Authority Having Jurisdiction
   3. ANSI - American National Standards Institute
   4. APWA - American Public Works Association
   5. ASTM - American Society for Testing and Materials
   6. CBC - California Building Code
   7. CEC - California Electrical Code
   8. CFC - California Fire Code
   9. FCC - Federal Communications Commission
   10. HVAC - Heating, Ventilating and Air Conditioning
   11. IEC - International Electro-technical Commission
   12. IEEE - Institute of Electrical and Electronics Engineers.
   13. IETA - International Electrical Testing Association
   14. FM - FM Global
   15. NEMA - National Electrical Manufacturers Association
   16. NFPA - National Fire Protection Association
   17. OSHA - Occupational Safety and Health Administration
   18. UL - Underwriters Laboratories Inc.

B. Provide: To furnish and install, complete and ready for the intended use.

C. Furnish: Supply and deliver to the project site, ready for unpacking, assembly, and installation.

D. Install: Includes unloading, unpacking, assembling, erecting, installing, applying, finishing, protecting, cleaning, and similar operations at the project site to complete items of work furnished by others.

E. Following is a list of commonly used terms:
   1. Active Equipment: Electronic equipment used to develop various WAN and LAN services.
   2. Backbone: Collective term sometimes used to describe the campus and vertical distribution subsystem facilities and media interconnecting service entrances, communications rooms, and communications cabinets.
   3. Bonding: Permanent joining of metallic parts to form an electrically conductive path which will assure electrical continuity and the capacity to safely conduct currents likely to be imposed on it.
   4. Cabinet: Wall-mounted modular enclosure designed to house and protect electronic equipment.

5. Cable Tray: Vertical or horizontal open supports, usually made of aluminum or steel, that are fastened to a building ceiling or wall. Cables are laid in and fastened to the trays. A cable tray is not a raceway.
6. Campus: Grounds and buildings of a multi-building premises environment.
7. Channel: The end-to-end transmission path between two points at which application specific equipment is connected; may include one or more links, cross-connect jumper and/or patch cords, and work area station cords. Does not include connections to active equipment.
8. Cross-Connect: Equipment used to terminate and tie together communications circuits.
9. Cross-Connect Jumper: A cluster of twisted-pair conductors without connectors used to establish a circuit by linking two cross-connect termination points.
10. Fiber Optic Distribution Unit (FDU): Cabinet with terminating equipment used to develop fiber optic cross-connect facilities. Also known as LIU.
11. Grounding: a conducting connection to earth, or to some conducting body that serves in place of earth.
12. Hinged Cover Enclosure: Wall-mounted box with a hinged cover that is used to house and protect electrical devices.
13. Horizontal: Pathway facilities and media connecting the MDF or IDF to Telecommunications Outlets.
14. Intermediate Distribution Frame (IDF): Data networking equipment rack and/or location that serves an individual area, floor or building. Downstream from the MDF.
15. Jack: Receptacle used in conjunction with a plug to make electrical contact between communications circuits, e.g., eight-position/eight-contact modular jacks.
16. Link: A transmission path between two points, not including terminal equipment, work area cables, and equipment cables; one continuous section of conductors or fiber, including the connecting hardware at each end.
17. Local Area Network (LAN): Data transmission facility connecting several communicating devices, typically Ethernet and the network is limited to a single campus.
18. Main Distribution Frame (MDF): Initial (main) data network equipment rack and/or location. Only one MDF occurs per site and may serve many downstream IDFs.
19. Media: The type of cable (e.g., twisted-pair, coaxial, or fiber optic) used to provide signal transmission paths.
20. Minimum Point of Entry (MPOE): The location where the service provider hands off connection and responsibility for service to on-premise customer owned equipment.
21. Modular plug: An eight-position, eight-conductor end-of-wire electrical connector used with Category rated cable.
22. Passive Equipment: Non-electronic hardware and apparatus, e.g., equipment racks, cable trays, electrical protection, wiring blocks, FDUs, etc.
23. Patch Cord: A length of copper or fiber cable with connectors on both ends used to join communications circuits at MDF/IDF and end stations.
24. Patch Panel: System of terminal blocks or connectors used with patch cords that facilitate the administration of cross-connect fields.

25. Pathway: Facility for the placement of communications cable. A pathway facility can be composed of several components including conduit, wireway, cable tray, surface raceway, underfloor systems, raised floor, ceiling support wires, etc.
26. Protectors: Electrical protection devices used to limit foreign voltages on metallic communications circuits.
27. Raceway: An enclosed channel designed expressly for holding wires or cables; may either conductive metal or insulating plastic. The term includes conduit, tubing, wireway, underfloor raceway, and surface raceway; does not include cable tray.
28. Rack: An open or enclosed structure, typically made of aluminum or steel, used to mount equipment; usually referred to as an equipment rack. Maybe freestanding and floor mounted or a wall mounted cabinet. Industry standard 19” width spacing.
29. Wiring Block: Punch down terminating equipment used to develop twisted pair cross-connect facilities.

1.04 PRODUCT AVAILABILITY

A. Products with long lead times are to be brought to the attention of the project manager.

1.05 PRODUCT SUBMITTALS

A. See Division 01 Submittals for more requirements

1.06 SUBSTITUTION LIMITATIONS

A. Equivalent product(s) may be considered for substitution for those products specified, however, the equivalent product(s) must be approved, and show demonstrated and documented equivalence to the product(s) specified. Documentation includes, but is not limited to, product samples, data sheets, and actual test data. The request for product substitution, and supporting documentation, must be submitted to the Project Manager/Designer in writing.

B. See Division 01 Substitutions for more requirements

1.07 QUALITY ASSURANCE

A. The Contractor is to conform to requirements of the latest adopted version of the CEC with amendments by local AHJs.

B. The Contractor is to conform to the latest adopted version of the CBC with amendments by local AHJs.

C. The Contractor is to obtain and pay for electrical permits, plan review, and inspections from local AHJs.

D. The Contractor is to furnish products listed by UL or other testing firm acceptable to AHJ.

E. The Contractor is to conform to requirements of the Service Providers (i.e., electric, telephone, broadband and cable television).

F. Contractor Qualifications:

1. The Contractor shall have a minimum of five years' experience in the design, installation, testing, and maintenance of low-voltage systems.
2. The Contractor shall maintain a local service facility which stocks spare devices and/or components for servicing systems.
3. The Contractor shall have performed successful installation and maintenance of at least three projects similar in scope and size. The Contractor must be able to provide project references for these three projects, including scope of Work, project type, owner/user contact name and telephone number.
4. For sections requiring installation personnel to be certified by the manufacturer, the Contractor selected for this project shall provide current certificates for all technicians working on the project.
5. The Contractor shall hold and maintain a valid California C-7 or C-10 State Contractors License, and can exhibit validity upon request.
6. The Contractor shall provide a list of test equipment proposed for use in verifying the installed integrity of copper and fiber optic cable systems used.
7. The Contractor shall provide the resume for the contractor's Project Manager and on-site Installation Supervisor who will be assigned to this project.
8. The Contractor shall provide a list of technical product training attended by the contractor's personnel that will install the specified manufacturer system.
9. The Contractor shall provide a list of Sub-Contractor(s) who will assist the Contractor in the performance of this work.

1.08 SEQUENCING AND SCHEDULING

A. For the proper execution of the work, the Contractor shall cooperate with other tradecrafts and contracts as needed.

B. To avoid installation conflicts, the Contractor shall thoroughly examine the complete set of Contract Documents, and resolve conflicts with Project Manager/Designer prior to installation.

C. Prior to installation of communications cable to equipment requiring connections, examine the manufacturer's shop drawings, wiring diagrams, product data, and installation instructions. Verify that the electrical characteristics detailed in the Contract Documents are consistent with the electrical characteristics of the actual equipment being installed. When

inconsistencies do occur, the Contractor shall request clarification from Project Manager/Designer.

1.09 SHOP DRAWINGS

A. Shop Drawings: When required by individual Specification Sections, the Contractor shall provide shop drawings which include physical characteristics, electrical characteristics, device layout plans, point-to-point wiring diagrams for all connections, and the like. Refer to individual Specification Sections for additional requirements for the shop drawings.

1.10 WARRANTY

A. The Contractor shall provide an extended manufacturer's warranty on the Backbone and Horizontal Communications systems as specified in other sections of Division 27.

1.11 CLOSE OUT DOCUMENTS

A. The Contractor shall provide final coordination drawings, with as-built information added, which are to be submitted as record drawings at completion of project.

B. Record Drawings:

1. Show changes and deviations from the Construction Drawings (including Addendums and change order documents).
2. Show exact routes of pathway facilities and service entrance conduits.
3. Show the exact location of racks, cabinets, mounting frames and the like.

C. Operation and Maintenance Documentation: Provide copies of certificates of code authority acceptance, product data, guarantees, warranties, installation guides, maintenance guides and the like.

D. Inspection and/or testing: Submit testing reports for testing that was performed.

PART 2 PRODUCTS

2.01 MANUFACTURERS

A. Provide like items from one manufacturer, such as wire/cable, jacks, modular plugs, patch panels, equipment connection cords, wall plates, and the like. See individual sections for detailed information.

2.02 MATERIALS

A. Provide new electrical materials of the type and quality detailed, listed by UL, bearing their label wherever standards have been established. Indicated brand names and catalog numbers are used to establish standards of performance and quality.

B. Provide material and equipment that is acceptable to AHJ as suitable for the use indicated. For example, provide plenum rated cable in ceilings that are utilized as air return plenums.

C. Include special features, finishes, accessories, and other requirements as described in the Contract Documents regardless of the item's listed catalog number.

D. Provide incidentals not specifically mentioned herein or noted on Drawings, but needed to complete the system, in a safe and satisfactory working condition.

PART 3 - EXECUTION

3.01 EXAMINATION

A. Construction Documents:

1. Drawings are diagrammatic with symbols representing communications equipment, outlets, accessories, and wiring.
2. Examine the entire set of Drawings to avoid conflicts with other systems. Determine the exact route and installation of communications wiring and equipment with conditions of construction.

3.02 INSTALLATION

A. Install communications equipment completely as directed by manufacturer's installation instructions. Obtain installation instructions from manufacturer prior to rough-in of the communications equipment, and examine the instructions thoroughly. When requirements of the installation instructions conflict with the Contract Documents, request clarification from Project Manager/Designer prior to proceeding with the installation.

B. Do not install communications equipment in obvious passages, doorways, scuttles, or crawl spaces, which would impede or block the passage's intended usage.

C. Do not install communications equipment in locations where it would obviously be subject to damage during normal use.

3.03 FIELD QUALITY CONTROL

A. Tests: Conduct tests of equipment and systems to demonstrate compliance with requirements specified in Division 27 & 28. Refer to individual Specification Sections for required tests. Testing documentation is to be included in Closeout Documents.

3.04 CLEANING

A. Remove all dirt and debris caused by the execution of the work.

B. Leave the entire communications system installed under this Contract in a clean, dust-free, and proper working order.

C. Vacuum and clean interiors of new and modified electrical signal and communication equipment enclosures.

END OF SECTION

SECTION 27 05 00
COMMON WORK RESULTS FOR COMMUNICATIONS

PART 1 - GENERAL

1.01 SUMMARY

A. This section specifies the basic materials and methods for all low voltage pathways installation work included under Division 27 and 28. Where those requirements differ from the requirements of this section, the more stringent shall govern.

B. This section adds refinements to Division 26 that apply to Communications and extra-low-voltage systems.

1.02 SCOPE

A. Materials and/or methods for the following.

1. Communication services
2. Grounding
3. Fasteners
4. Hangers and supports
5. Conduits/Backboxes/Raceways
6. Underground
7. Sleeves and penetrations

1.03 SUBMITTALS

A. Submittals shall be done in accordance with District submittal procedures, see Division 01 Submittals for requirements.

1.04 RELATED REQUIREMENTS

A. Division 07 – Thermal and Moisture Protection

B. Section 09 91 00 - Painting

C. Division 26 – Electrical

D. 27 00 00 – Communications Basic Requirements

1.05 REFERENCES

A. ANSI American Nation Standards Institute

B. NFPA 70 – National Electrical Code

C. UL Underwriters Laboratory

D. California Building Code (CBC)

E. California Electrical Code (CEC)

1.06 WARRANTY

A. Refer to Division 01 -– Warranties

PART 2 – PRODUCTS

2.01 All products used on this project shall bear the label of- and be approved by Underwriters Laboratories unless otherwise approved in writing by District.

2.02 FASTENERS

A. Mounting hardware and anchors recommended by the manufacturer of any material that shall be mounted to the building or structure.

1. Sheet rock / drywall / wall board: Easy Anchor, toggle bolt, other spread type anchor with load distribution, or approved equivalent.
2. Concrete / cinder block / solid masonry: Expanding compression type lag, expanding compression type bolt, expanding compression type, all-thread with nuts, or approved equivalent.
3. Tile / Stucco / hollow masonry: Toggle bolts or approved equivalent.
4. Wood: Lag screws, wood screws, or approved equivalent.
5. Metal: Beam clamps, sheet metal screws, self-drilling screws or approved equivalent.

2.03 HANGERS AND SUPPORT

A. D-RINGS

1. Commercial grade

B. J-HOOKS

1. Commercial grade
2. Colored coded by system:
    a. No color = Data
    b. Orange = Fiber optic cables and service provider feeders
    c. Blue = CCTV, Electronic Access Control, and Intrusion
    d. Yellow = Clock, Intercom, and Audio-Visual (non-data)
    e. Green = EMS and lighting controls
    f. Red = Fire Alarm

2.04 SURFACE RACEWAY

A. The District has standardized the use of Wiremold 800, 2300, 5400 and 5500 series for non-metallic surface raceway.

2.05 CONDUITS AND ACCESSORIES

A. CONDUITS

1. See Division 26 for additional requirements.

2. For new construction, exposed Fire Alarm pathways to be in red painted conduit.

3. All new conduits shall be sized accordingly to achieve a 40% maximum fill ratio with initial cables installed.

4. Underground conduits shall be Schedule 40 PVC.

B. INNERDUCT

1. Orange corrugated HDPE (High Density Polyethylene) Innerduct shall be used for fiber optic cable protection in interior locations.

2. Fabric multi-cell innerduct is approved for underground conduits 2” and larger.

C. FITTINGS:

1. See Division 26 for additional requirements.

2. Commercial grade.

3. Compression type.

2. Conduit bodies and any other sharp bend fittings are <u>strictly prohibited for communication Cat6A and fiber optic cables.</u> Appropriate conduit sweeps are required.

D. PULL LINE

1. Minimum 1/8" diameter or larger braided line of polypropylene or continuous fiber polyolefin. The minimum breaking strength of 1/8 in. line is 200 lbs.

E. SLEEVES

1. All conduit sleeves shall be of sufficient quantity and size to achieve a 40% maximum fill ratio with initial cables installed.

2. Penetrations through rated assemblies to use EZ-Path or an approved equal.

2.06 BACKBOXES AND JUNCTION BOXES

A. Galvanized one-piece or welded pressed steel type. Boxes for fixtures shall not be less than 4" square and shall be equipped with fixture stud. Boxes shall be at least 2-1/8" deep, 4" square for 1 or 2 gang devices, with device rings. Boxes mounted in wall or ceiling finished with 5/8” gypsum board shall be furnished with 5/8” deep device rings. Provide blank cover for all boxes without fixture or device. 4 11/16 and/or 5” square back boxes may be required for larger cable requirements.

B. Junction boxes, larger than 8”, located indoors shall be hinged, NEMA-1 rated.

C. Junction boxes, larger than 8”, located outdoors, or in wet or damp locations shall be hinged, NEMA-3R.

D. Provide and install tamper-proof screws for all exterior box lids.

E. Junction boxes used for Fire Alarm systems are to be red in color with red colored cover plates.

2.07 GROUND BOXES

A. See Division 26 and below for additional requirements.

B. Approved manufactures are Jensen, Christy or approved equivalent.

C. All ground boxes shall have metal traffic-rated lids with permanent factory markings of COMM/COMMUNICATIONS/DATA/SIGNAL/FIRE ALARM.

D. Minimum size is 17” x 30”

E. 24”x36” ground boxes are required for 90-degree turns in underground pathway, or 3-way underground pathway connections.

E. For dedicated AT&T service feeds, the minimum requirement is a 36”x48” Intercept pull-box at service tie-ins. Refer to current AT&T documents/requirements.

F. For Comcast service feeds the minimum requirement is a 24” x 36” at service tie in; 17”x30” inline ground boxes are acceptable.

2.08 PENETRATION SEALING

A. Firestopping: Provide UL Listed firestopping materials for all penetrations through rated assemblies (walls / floors). See Division 07 for more information.

B. Draft stopping: Use foam sealant around conduit penetrations (in non-rated assemblies) to prevent passage of air, smoke, and/or toxic gas. See Division 07 for more information.

C. Weatherproofing: Use weatherproof sealant around conduit penetrations in exterior walls to prevent the intrusion of water. See Division 07 for more information.

2.09 GROUNDING BUS BAR

A. Copper bus bar 2”x10”x1/4” minimum size with stand-off brackets and insulators, pre-drilled and threaded mounting holes (hole qty. 12 or greater) for equipment grounding lug attachment.

PART 3 - EXECUTION

3.01 COMMUNICATION SERVICES

A. Install inground boxes, conduits, and terminal cabinets per service provider requirements.

3.02 GROUNDING

A. Ground fittings shall be UL approved for each application and installed and/or connected to system in accordance with current CEC Code requirements.

B. See Division 26 for additional requirements.

C. Install grounding bus bar per manufacturer's instructions in each MDF and IDF.

3.03 HANGERS AND SUPPORTS

A. Install hangers and supports per manufacturer's written instructions.

B. Hanger spacing shall be 48" or less and within 12" of sleeves and/or junction/back boxes.

3.04 LOW VOLTAGE PATHWAY/RACEWAYS

A. EMT conduit may be used at following locations (see Division 26 for additional requirements):
   1. In dry locations in furred spaces.
   2. In partitions other than concrete or solid masonry.
   3. In protected exterior locations not exposed to direct weather.

B. Rigid steel conduit and fittings shall be used for vertical risers and on top of all roofs, overhangs, walkways, canopies, or any other location exposed to direct weather. See Division 26 for additional requirements.

C. Furnish and install pull lines in all unused (empty) conduits or raceways. All pull lines shall be permanently tagged with identification at both ends.

D. Install exposed conduits neatly, parallel to or at right angles to structural members. Maintain a minimum of 12 inches of clearance from steam or hot water pipes. All installed strut channel supports should allow for future conduit attachments. The width of strut channel to match the width of the closest attached junction box. See design document details for attachment requirements.

E. Install j-hooks pathways perpendicular/parallel to building structure – no diagonal runs.

F. Supports: Support conduit with two-hole straps or strut channel where shown in design documents and/or specified. Coordinate supports with architectural details. Secure to wood structure by means of bolts or lag screws, to metal by means of shallow self-tapping screws, to concrete by means of insert or expansion bolts, to brickwork by means of expansion bolts, and to hollow masonry or stucco by means of toggle bolts.

G. Spacing for all EMT and rigid steel conduit supports shall be as follows, unless otherwise specified in design documents details:

1. Surface conduit spacing and supports and unless otherwise specified or shown on drawing details:

a. EMT – Size 3/4” to 2” – 4’ maximum spacing (3 each supports per 10’ conduit length) and 12” from each end of conduit at coupling, connector, or 90-degree bend.

b. Rigid steel – Size 3/4” to 2” – 4’ maximum spacing (3 each supports per 10’ conduit length) and 12” from each end of conduit at coupling, connector, or 90-degree bend.

H. If conduit is designated for low voltage use, no more than a total of 360 degrees of conduit bend radius will be allowed between pull/junction boxes.

I. All junction boxes shall be connected to conduits using appropriate connecting hardware (i.e. box connectors).

J. Clean, prep and paint with existing matching wall color all exposed conduit, junction boxes, channel strut, fittings, and accessories.

K. Before pulling any conductors into an underground PVC conduit (new or existing), the conduit shall be first be proofed by pulling through a mandrel of a diameter ¼ in. smaller than the conduit inside dia., followed by a swab of the same diameter as the conduit inside diameter.

L. Non-metallic raceway to be installed with mechanical fasteners only, do not remove adhesive tape backing.

M. Capping

1. Cap conduits with manufactured seals during construction. Swab out conduits before installing wires.

2. Cap all empty conduits below grade and in pull boxes with manufacturer's caps to prevent entrance of debris; attach pull string to cap.

N. Underground Conduit

1. Service provider conduits shall be:

a. AT&T – one ea. 4” (fiber only) or two ea. 4” (fiber and copper)

b. Comcast – one ea. 2”

2. #10 tracer wire or tracer tape is required for all underground Division 27 PVC conduits.

3.05 J-BOXES

A. Screws shall be used to attach boxes, and must be accurately placed for finish, independently and securely supported by adequate wood backing or by manufactured adjustable channel type heavy-duty box hangers.

1. Boxes shall be attached to metal studs with metal box hangers.

2. Boxes installed in masonry tile or concrete block construction shall be secured with auxiliary plates, bars, or clips, and be grouted in place.

B. Locate outlets at the following heights unless otherwise noted on Drawings, Specifications, current CBC, or as required to meet ADA handicap requirements.

1. Data Outlets: Same height as electrical outlets

2. Telephone Wall Outlets: Above counter/backsplash height or at electrical switch height.

C. Boxes shall be placed within 18” of electrical outlets.

D. For sound control, separate outlets on opposite sides of walls with a 16" minimum separation. Where outlets are less than 16" or in sound rated walls, seal airtight with fire rated sheet putty pads. Fill gap between junction box and wall with acoustical sealant all around perimeter of junction box. Fill conduits larger than 1 1/4" with fire rated putty.

E. Installation of conduit and outlet boxes in fire-resistive walls, floors, floor-ceiling or roof-ceiling assemblies shall comply with Title 24, Part 2, Section 713.

3.06 GROUND BOXES

A. To be installed per Division 26 requirements.

B. Provisions are to be made for supporting cables from the box sides (i.e., j-hooks, d-rings)

C. Install a 36” x 48” ground box for service provider AT&T at service tie-in location and/or a 24” x 36” ground box for service provider Comcast at service tie-in location. If less than 360-degrees of bend, and less than 200 feet in distance, it is acceptable to stub directly into the MPOE. If greater than 360-degrees of bend, or greater than 200 feet in length, then additional in-line ground boxes are required (17” x 30”). See section Part 2 – Products for more information.

3.07 CONDUIT PENETRATIONS AND SLEEVES

A. PENETRATIONS:
   a. Where conduit passes through walls, ceilings, or floors, with connection points to junction boxes or raceways mounted to both sides of the same wall, provide a threaded conduit and secured in place with locking rings on both sides.

   b. Where the conduit passes through walls, ceilings, floors with connection points to junction boxes or raceways not mounted to the same wall as the penetration, provide EMT conduit and secured in place with strut channel.

B. SLEEVES
   a. Conduit sleeves are to extend 6” past wall surface and be securely attached to the building structure, with plastic bushings on both ends.

   b. For rated assemblies use EZ-Path sleeves and install per manufacturer’s instructions.

C. FIRE STOPPING

   1. Seal all conduit penetrations through fire-rated walls and floors in a manner that is fire and smoke tight in conformance with current CBC and current CEC. See Division 07 for more information.

D. DRAFT STOPPING

   1. All non-fire-rated walls must be draft-stopped and sealed. Submit method to be used for approval by inspector and/or project manager. Mineral wool is one product that may be used. See Division 07 for more information.

E. WEATHER SEALING

1. All exterior penetrations shall be sealed watertight. The contractor shall use silicone rubber caulk or other approved methods and materials. Submit methods and materials to inspector and/or project manager. See Division 07 for more information.

3.08 CLEANING

A. Clean all work prior to concealing, painting, and acceptance. Performed in stages if directed.

B. Clean and repair soiled or damaged painted exposed work before final acceptance in a manner to match adjoining work.

C. Remove debris from inside and outside of equipment and enclosures.

3.09 PAINTING

A. Paint exposed conduit and j-boxes occurring in finished areas with existing matching wall color. See 09 91 00 – Painting

3.10 FINAL DOCUMENT SUBMITTALS

A. See 27 00 00 for more information.

END OF SECTION

SECTION 27 10 00
STRUCTURED CABLING

PART 1 – GENERAL

1.01 SUMMARY

A. This section specifies equipment, accessories, materials, installation, configuration, and testing requirements for a complete and operable Structured Cabling communications system. The system shall provide highly reliable and high-performance data communication from main distribution frame (MDF) through each intermediate distribution frame (IDF) to end points requiring fiber optics and/or copper cabling and associated equipment.

B. This section condenses sections 27 11 00 – Communications Equipment Room Fittings, 27 13 00 – Communications Backbone Cabling, 27 15 00 – Communications Horizontal Cabling and 27 16 00 – Communications Connecting Cords into one comprehensive section.

1.02 SCOPE

A. The work will include but not be limited to the following objectives:

1. Contractor shall furnish and install all required components and accessories as outlined in the design documents for a complete and operable turn-key system.
2. Quality workmanship is a high priority for the District and the Contractor shall be held to a high-level of professional workmanship. Contractors unfamiliar with the District's standards shall familiarize themselves with the standards and requirements prior to beginning work
3. The Contractor shall furnish and install fire-treated ¾" (three quarter inch) plywood for the MDF room (all walls, from floor level to 8' high) and IDF locations (as required or indicated in the design documents).
4. The Contractor shall furnish and install a ground bus bar at the MDF and IDF rooms.
5. The Contractor shall furnish and install all required racks and cabinets.
6. The Contractor shall furnish and install all newly required conduit/raceway.
7. The Contractor shall furnish and install all wire/cable (copper/fiber optic) as required.
8. The Contractor shall terminate all strands of fiber at each fiber enclosure.
9. The Contractor shall furnish and install termination at all end-point equipment (patch panels, jacks, wallplates, enclosures, etc.).
10. The Contractor shall furnish and install all patch cords (copper/fiber).
11. The Contractor shall test and certify (for warranty) the installed cable plant.

1.03 RELATED REQUIREMENTS

A. Section 01 – General Requirements

B. Section 27 00 00 – Communications

C. Section 27 05 00 – Common Work Results for Communication Systems.

1.04 INDUSTRY GUIDELINES AND STANDARDS

A. California Electrical Code (CEC) – Current adopted version

B. California Building Code (CBC) – Current adopted version.

C. ANSI/TIA-568.0-D – Generic Communications Cabling for Customer Premises.

D. ANSI/TIA-568.1-D – Commercial Building Communications Cabling Standard Part 1: General Requirements.

E. ANSI/TIA 568-C.2 – Balanced Twisted-Pair Telecommunications Cabling and Components Standards

F. ANSI/TIA 568.3-D – Optical Fiber Cabling Components Standard

G. ANSI/TIA-569-D – Commercial Building Standard for Telecommunications Pathways and Spaces.

J. ANSI/TIA-606-B – Administration Standard for the Commercial Telecommunications Infrastructure.

K. ANSI/JSTD-607-C – Commercial Building Bonding and Grounding (Earthing) Requirements for Telecommunications.

1.05 QUALIFICATIONS

A. The contractor shall possess a California C7 or C10 license.

B. The Contractor or Subcontractor shall have 5 years' documented experience.

C. The Contractor and installers shall be certified by the product manufacturer.

1.06 SYSTEM REQUIREMENTS

A. Any new installations or existing system modifications shall seamlessly integrate into the site's existing data cable plan system.

1.07 CONTRACTOR "SHOP DRAWINGS" DESIGN REQUIREMENTS

A. See section 27 00 00 for requirements.

1.08 SUBMITTALS

A. See section 27 00 00 for requirements.

1.09 WARRANTY

A. Refer to Division 01 Warranty section.

B. See section 27 00 00 for additional requirements.

C. 25-year manufacturer's warranty/certification required for all copper and fiber cable plant installations.

1.10 CLOSEOUT DOCUMENTS

A. See section 27 00 00 for requirements.

PART 2 – PRODUCTS

2.01 GENERAL

A. See Appendix A at the end of this document for pre-approved materials.

B. All products shall be new, unused and without blemishes and shall be of manufacturer's current and standard production.

C. The Contractor shall confirm all equipment part numbers with the Project Manager or District prior to ordering equipment and updating submittals as required.

D. The Drawings and Specifications indicate major system components, and may not show every component, connector, module, or accessory that may be required to support the operation specified. The Contractor shall provide all components needed for complete and satisfactory installation and operation.

E. The Contractor shall install mounting hardware and anchors as recommended by the Manufacturer of the equipment that requires mounting to the building or structure and adhere to all code requirements. See section 27 05 00 for requirements.

F. Product Availability

1. The Contractor, prior to submitting a proposal, shall determine product availability and delivery time, and shall include such considerations into his proposed Contract Time.

2.02 MANUFACTURERS AND PRODUCTS

A. See Appendix A at the end of this document for pre-approved materials.

B. Product Substitutions require proof of equivalence and approval by District and/or its representative. Substitution requests to be submitted in writing.

C. For maintenance and consistency with the existing installed base, data connectivity components (copper and fiber) shall be Superior Essex cable and Ortronics connectivity.

2.03 COPPER/FIBER OPTIC CABLES AND COMPONENTS

A. All copper cables and components shall be Cat6A rated.
1. Cable to be reduced diameter. White jacket for default cable, Blue jacket for CCTV and Access Control only.
2. Jacks to be keystone style.
3. All cables shall be terminated on keystones at IDF/MDF end. No modular plug terminations are permitted at IDF/MDF locations.

B. Patch cords system/color:
   1. Data = White color
   2. AP = Green color (2 ea. req'd at each AP)
   3. CCTV = Blue color
   4. Clock/Intercom = Yellow color
   5. Access Control = Black color
   6. Fire Alarm/Intrusion Alarm = Red color

C. Patch cord length
   1. At patch panel 12" typical or no more than 12" slack.
   2. Station-side patch cords to be 10' in length.

D. Data jacks system/color:
   1. Data/default = White color
   2. AP = Green color
   3. CCTV = Blue color
   4. Clock/Intercom = Yellow color
   5. Access Control = Black color
   6. Fire Alarm/Intrusion Alarm = Red color

E. Fiber Optic Cable:
   1. Minimum strand count is 24.
   2. All fiber optic cables and components shall be single single-mode OS2 rated.
   3. Fiber optic cable terminations shall be LC-Duplex style.

PART 3 – EXECUTION

3.01 ACCEPTABLE INSTALLERS

A. The components making up the structure cabling system shall only be installed by Contractors who are qualified to install, service and maintain the system.

B. Cable terminations (copper or fiber) shall be installed by manufacturer-certified technicians.

C. The Contractor (or subcontractor listed at time of bid) must have at least five (5) years' experience before the Bid Opening Date.

3.02 EXAMINATION

A. The Contractor shall be required to visit the installation site(s) prior to job bidding. The Contractor acknowledges that the failure to visit the site(s) will not relieve the Contractor of the responsibility for accurate bidding and performance of the Work.

B. The Contractor shall report any discrepancies between the Specifications, Drawings, and Site Examination prior to the Bid Opening Date.

3.03 PREPARATION

A. The Contractor shall order all required parts and equipment upon receipt of approved product submittals.

B. The Contractor shall verify the availability of power where required.

3.04 SHOP DRAWINGS

A. The Contractor shall create "Shop Drawings" per section 27 00 00 for this section.

B. Submit drawings for review and approval by the Project Manager and/or Designer.

3.05 INSTALLATION

A. ENTRANCE FACILITIES

1. Contact telecommunications service provider and arrange for installation of demarcation point, protected entrance terminals, and housing when so directed by service provider.

2. Install underground or aerial pathways complying with recommendations in TIA/EIA-569-A, "Entrance Facilities" Article.

B. UNDERGROUND ENTRANCE PATHWAY

1. Install the underground entrance pathway complying with Division 26.

C. EQUIPMENT RACKS, CABINETS, ENCLOSURES AND ACCESSORIES

1. Backboards:
   a. Shall be installed behind the rack or cabinet if the cabinet is not able to be directly attached to two vertical wall studs.
   b. Backboards shall be made of fire retardant or treated materials, squarely cut, and with sanded edges
   c. Backboards shall be a minimum ¾" thick and large enough to secure it to two vertical wall studs.
   d. The "FIRE RATED" stamp shall be visible.
   e. Backboards shall be fastened with ¼" lag bolt and washer, non-recessed, with maximum spacing of 18" into 2 vertical studs. 1-1/2" embedment.
   f. Visible portions (outside of cabinet) of Backboards shall be painted black.

2. All data & voice communications racks and cabinets shall be anchored in accordance with manufacturer's specifications, project specifications and/or drawn details, to walls and floors and grounded to building ground grid (not to water pipes etc.).

3. Securely mount equipment cabinet and racks to the building structure. A proper quantity of support fasteners shall be utilized. Typically lag bolts for wood installations, wedge anchors for concrete flooring. Submit data sheets for mounting fasteners for approval before installation. Mount equipment per DSA approved drawings/details.

4. Equipment cabinet mounted on or against walls will have 3-foot clearance in front of deepest component and accessible to rear for service.

5. MDF and all IDFs shall have at least one dedicated 120VAC 20-amp quad-receptacle each.

6. Patch Panels: Mount patch panels into the cabinet/rack. Match manufacturer of existing install or if new construction, see Appendix A.

   a. Patch panel ports shall be grouped by Room and then by System (General Data, Intercom, AP, Other). Label the patch panel with the first port of each Room.
   b. Exterior devices shall be grouped with the closest adjacent interior space.
   c. Do not segregate patch panels by system unless specifically directed on the rack elevation.

7. Cable Management: Secure the cable bundle(s) to the rack strain relief and cable management behind the patch panels and cross connect block panels. Install horizontal cable management panels and brackets for routing and management of patch cables. Maintain TIA/EIA and BICSI standards on bundling, supporting and bend radius.

8. Surge Protected Outlet Strips: Required in MDF rack. Mount surge protected outlet strips per Manufacturer's directions. Refer to details on the Drawings for mounting location.

D. MDF/IDF GROUNDING

1. Refer to Section 27 05 00 Grounding for more requirements.

2. Locate the grounding bus bar to minimize the length of bonding conductors. Fasten to the wall allowing at least 2-inch (50-mm) clearance behind the grounding bus bar. Connect grounding bus bar with a minimum No. 6 AWG grounding electrode conductor from grounding bus bar to suitable electrical building ground.

3. Bond metallic equipment (including ladder rack) to the grounding bus bar, using not smaller than No. 6 AWG equipment grounding conductor.

3.06 WORKMANSHIP

A. Quality workmanship is a high priority for the District and the Contractor shall be held to a high-level of professional workmanship.

B. The District' Project or Construction Manager will have the authority to reject Work which does not conform to the Drawings and Specifications.

C. Comply with the highest industry standards, except when specified requirements indicate more rigid standards or more precise workmanship.

D. Perform Work with persons experienced and qualified to produce workmanship specified.

E. Maintain quality control over suppliers and Subcontractors.

3.07 WIRE/CABLE (COPPER/FIBER OPTIC)

A. Design, layout, size, and plan new cable runs as required.

B. All wire and cable passing through metalwork shall be sleeved by an approved grommet or bushing.

C. Conduit/raceway fill shall not exceed 40 percent of interior cross-sectional area.

D. Neatly dress and tie (Velcro) all cabling.

E. UTP cabling shall conform to a 6-foot separation requirement from the main power panel, transformers, switchgear and/or starter motors adjacent to the MDF, IDF and termination locations.

F. Fiber optic cables shall be installed from the MDF to each IDF.

G. Orange corrugated HDPE (High Density Polythylene) Innerduct shall be used for fiber optic cable protection in all interior locations.

H. Spicing of fiber optic cable shall be done with fusion splices.

I. When required copper feeders (minimum 4-pair) are to be installed from the MDF to each IDF.

J. Maintain proper bend radius for all cable installations.

K. Do not exceed cable manufacturer's instructions for installation pull load. Any cable damaged by excessive pull force shall be replaced by the installation contractor.

L. Modular plug terminated link (MPTL) style wiring is acceptable for CCTV with modified single connector permanent link testing.

3.08 LABELING

A. MDF/IDF - Identification number in large font on front of cabinet.

B. MDF, Fiber Optic LIU Ports – IDF number and room number

C. MDF/IDF, Copper Patch Panel – Panels labeled P1, P2, P3, etc., ports labeled with room number.

D. LAN Outlet – IDF number, patch panel number, patch panel port number.

E. Cables to be labeled both ends with unique identifiers and from/to location identifiers. For Copper Cat cable IDF number, patch panel number, patch panel port number.

F. T-bar ceilings shall have device labels attached next to the device for ceiling mounted equipment and at the tile for above ceiling equipment with device type and device ID points/IP address.

3.09 CONDUIT AND RACEWAY INSTALLATION

A. See Division 26 and section 27 05 00 for additional requirements.

B. Conduit bodies and any other sharp bend fittings are strictly prohibited for communications cabling (copper/fiber).

C. Install proper radius conduit sweeps where required.

3.10 COMISSIONING PREPARATION

A. 4 weeks prior to system turn up:
   a. All jacks in patch panels are to be completely installed.
   b. A worksheet is to be prepared by the Contractor indicating which switch port is assigned to what system (i.e. general data, intercom, AP, etc.) and the worksheet to be attached to the data switch.
   c. Data switches are to be delivered to the District by the Contractor and coordinated with the District's Network Engineer.

3.11 FIELD QUALITY CONTROL AND TESTING

A. All Fiber and Cat6a copper cable installations to be certified by testing with an certified test system that is approved by the manufacturer for warranty certification (typically a Fluke).

B. Submit the Record Drawings (as-builts) to District for review prior to inspection.

C. During the formal Test & Inspection (Commissioning) of the system, the Contractor shall have personnel available with tools and equipment to inspect wiring, devices, and system operation.

D. If corrections are needed, the Contractor will be provided with a Punch-List of all discrepancies. Perform the needed corrections in a timely fashion.

E. Notify the District when ready to perform a re-inspection of the installation.

F. Provide 25-year manufacturer's warranty/certification documentation for all copper and fiber cable plant installations.

3.12 CLOSEOUT DOCUMENTS

A. See section 27 00 00 for requirements.

APPENDIX A – Pre-Approved Materials

DESCRIPTION	MFG	PART NUMBER
Rack Cabinet 7' (43U), 41" Deep	Chatsworth Products	Z4-21N-113C-C12
Wall Mount Cabinet 24" (12 RU) 30" Deep *(retrofit only, not for new construction)*	Chatsworth Products	12419-724
CUBE-iT Fan Kit	Chatsworth Products	40972-001
20 AMP Power Strip	Chatsworth Products	12848-701
Standard Busbar	Chatsworth Products	10622-010
12" Ladder Rack 10'	Chatsworth Products	11275-712
Ladder Rack Triangular Support Bracket	Chatsworth Products	11746-712
Ladder Rack Wall Angle Support 12"	Chatsworth Products	11421-712
Ladder Rack Butt-Splice Kit	Chatsworth Products	11301-712
Ladder Rack Foot Kit	Chatsworth Products	11309-701
19" Horizontal Cable Manager	Ortronics	808004759
Patch Panel 24-port 1-RU (Black)	Ortronics	OR-SPKSU24
Patch Panel 48-port 2-RU (Black)	Ortronics	OR-SPKSU48
Patch Panel Cable Management Support Bar	Ortronics	OR-CMBFR0RU
Faceplate, 2-port (White)	Ortronics	KSFP2-88
Faceplate, 4-port (White)	Ortronics	KSFP4-88
Surface Mount, 2-port (White)	Ortronics	KSSMB2
Faceplate, 1-port Phone Hanger (Stainless)	Ortronics	403STJ1WP
Cat6A Data Jacks (White)	Ortronics	KT2J6A-88
Cat6A Data Jacks (Green)	Ortronics	KT2J6A-45
Cat6A Data Jacks (Blue)	Ortronics	KT2J6A-36

Cat6A Data Jacks (Yellow)	**Ortronics**	**KT2J6A-44**
Cat6A Data Jacks (Black)	**Ortronics**	**KT2J6A-00**
Cat6A Data Cable, Riser (White = default)	**Superior Essex**	**6B-246-4A**
Cat6A Data Cable, Plenum (White = default)	**Superior Essex**	**6B-246-4B**
Cat6A Data Cable, Riser (Blue = CCTV/Access Control)	**Superior Essex**	**6B-246-2A**
Cat6A Data Cable, Plenum (Blue = CCTV/Access Control)	**Superior Essex**	**6B-246-2B**
Cat6A Data Cable, Indoor/Outdoor (Black)	**Superior Essex**	**6B-272-ER**
Cat6A Data Cable, OSP (Black)	**Superior Essex**	**04-001-A8**
Extended Distance PPoE Cable, OSP	**Superior Essex**	**PW04-401-48**
Cat6A Patch Cord – for Extended Distance links only (Black)	**Monoprice**	**44669**
Cat6A Patch Cord Slim (White) (12” typ.)	**Quiktron**	**576A-RD25-0xx (xx = length)**
Cat6A Patch Cord Slim (Blue) (12” typ.)	**Quiktron**	**576A-RD10-0xx (xx = length)**
Cat6A Patch Cord Slim (Green) (12” typ.)	**Quiktron**	**576A-RD20-0xx (xx = length)**
Cat6A Patch Cord Slim (Yellow) (12” typ.)	**Quiktron**	**576A-RD15-0xx (xx = length)**
Cat6A Patch Cord Slim (Black) (12” typ.)	**Quiktron**	**576A-RD35-0xx (xx = length)**
Fiber Optic LIU 1-RU	**Ortronics, Q-Series**	**EQ01U-CHC**
Fiber Optic LIU 2-RU	**Ortronics, Q-Series**	**EQ02U-CHC**
Fiber Optic LIU 4-RU	**Ortronics, Q-Series**	**EQ04U-CVC**
Splice Tray	**Ortronics, Q-Series**	**FST4-F012 w/ mounting bracket WQS-STB**
Fiber Optic Adapter	**Ortronics, Q-Series**	**OFP-LCQ24AC**

Fiber Optic LC Field Term Connector	**Ortronics**	**205KNF9SA-09**
Fiber Optic Cable 24-strand, Single-Mode OS2, Indoor/Outdoor	**Superior Essex**	**W4024K101**

END OF SECTION

SECTION 28 10 00
ACCESS CONTROL SYSTEM

PART I - GENERAL

1.01 SUMMARY

A. This section specifies equipment, accessories, materials, installation, configuration, and testing requirements for a complete and operable electronic access control system. The system shall provide electronic access to secure doorways to authorized people at an authorized time of day. Doors provided with panic hardware or fire exit hardware and serving a Group A or E occupancy shall be permitted to be electrically locked in accordance w/ CBC 1010.2.11 or 1010.2.12.

1.02 SCOPE

A. The work will include but not be limited to the following objectives:

1. Labor and Materials: The Contractor shall provide and pay for all labor, supervision, materials, accessories, components, equipment, tools, transportation, and other facilities and services necessary for the proper installation of a turn-key Access Control system to the District.

2. The contractor will coordinate with the District in writing for any needed information (i.e. IP addresses, etc.) at least 2 weeks prior to the date the information is needed.

3. Access Control software and equipment: Includes, but is not limited to:
   a. Software based system for user authentication and system control
   b. RFID cards/fobs
   c. RFID readers
   d. Door controllers
   e. Power supplies
   f. Electrified door hardware/latches/strikes
   g. Door position switches
   h. Power transfer hinges/armored loops
   i. Request to exit (REX) devices (typically integrated into the door hardware)
   j. RFID badge printer (optional)

4. Typical installation includes software, door controller, card reader, door sensor, request to exit (REX) and electrified door hardware. Typical installations require bored doors and power transfer (see 08 71 00 – Door Hardware for more information).

5. All installations with network connectivity shall utilize District's network and be managed by the District's Avigilon ACM Enterprise system.

6. Access control hardware shall continue to fully function in the event of communication loss to the central server.

7. Power to control panels shall be hardwired in conduit.

8. All door controllers shall have battery backup.

1.03 RELATED REQUIREMENTS

A. Division 01 – General Requirements

B. Section 08 71 00 – Door Hardware

C. Section 27 00 00 - Communications

D. Section 27 05 00 – Common Work Results for Communication Systems.

E. Section 27 10 00 – Structured Cabling

F. Americans with Disability Act (ADA)

1.04 REFERENCES

A. See section 27 00 00 for requirements.

1.05 DEFINITIONS

A. See section 27 00 00 for requirements.

1.06 SYSTEM REQUIREMENTS

A. Any new installations or existing system modifications shall seamlessly integrate into the site's existing Access Control systems and integrate into the Districts Avigilon ACM Enterprise installation.

1.07 SUBMITTALS

A. See section 27 00 00 for requirements.

1.08 CONTRACTOR "SHOP DRAWINGS" DESIGN REQUIREMENTS

A. See section 27 00 00 for requirements.

B. Shop drawings are required for this section.

1.09 QUALIFICATIONS

A. Contractor shall be located within 50 miles or less from the project site to support 2-hour response time.

B. Five (5) years' experience installing communications equipment systems.

1.10 CERTIFICATIONS

A. See section 27 00 00 for requirements.

1.11 WORKMANSHIP

A. Quality workmanship is a high priority for the District and the Contractor shall be held to a high-level of professional workmanship.

B. The District's Project or Construction Manager will have the authority to reject Work which does not conform to the Drawings and Specifications.

C. The Contractor shall comply with highest industry standards, except when specified requirements indicate more rigid standards or more precise workmanship.

D. The Contractor shall perform the work with persons experienced and qualified to produce workmanship specified.

E. The Contractor shall maintain quality control over suppliers and Subcontractors.

F. The Contractor shall be responsible for scheduling Subcontractors in a timely fashion.

1.12 WARRANTY

A. Refer to Division 01 Warranty section.

B. See section 27 00 00 for additional requirements.

1.13 CLOSEOUT DOCUMENTS

A. See section 27 00 00 for requirements.

PART 2 - PRODUCTS

2.01 GENERAL

A. Manufacturers - See Appendix A at the end of this document for pre-approved materials.

B. All products shall be new, unused and without blemishes and shall be of manufacturer's current and standard production.

C. Drawings and Specifications indicate major system components, and may not show every component, connector, module, or accessory that may be required to support the operation specified. The Contractor shall provide all components needed for complete and satisfactory installation and operation.

D. Product Availability

1. The Contractor, prior to submitting a proposal, shall determine product availability and delivery time, and shall include such considerations into his proposed Contract Time.

2. Subject to compliance with these specifications, products and systems included in this section are to be installed as specified by the manufacturer of the system or engineer approved equal.

2.02 EQUIPMENT

A. See Appendix A at the end of this document for pre-approved materials.

B. Substitutions require proof of equivalence and prior approval by District and/or its representative before ordering.

C. Whenever possible and required the request to exit functionality shall be integrated into the door hardware.

D. Electrified latch hardware shall be compatible with panic hardware and be “rim” style.

E. Panel cabinets shall have key locks.

F. The contractor shall furnish at least 100 RFID cards serialized per the District’s standards. Middle Schools and High Schools to receive 200 RFID cards.

2.03 EXTRA STOCK

A. For each increment of 100 controlled doors furnish:

1. Quantity 5 of current model door controller.

2. Quantity 5 of current model card reader.

PART 3 - EXECUTION

3.01 ACCEPTABLE INSTALLERS

A. The equipment shall only be installed by Contractors who are qualified to install and maintain the system.

B. The Contractor (or subcontractor listed at time of bid) must have at least five (5) years' experience installing electronic access control equipment before the Bid Opening Date.

3.02 EXAMINATION

A. The Contractor shall be required to visit the installation site(s) prior to bidding the job. The Contractor acknowledges that the failure to visit the site(s) will not relieve the Contractor of the responsibility for observing and considering those conditions which a Contractor would have observed and considered during a site visit, estimating properly the difficulty and cost of successfully performing the Work or proceeding to perform the Work without additional cost to District.

B. The Contractor shall report any discrepancies between the Specifications, Drawings, and Site Examination prior to the Bid Opening Date.

3.03 PREPARATION

A. The Contractor shall verify materials are readily available prior to submitting product submittals and notify the District's Project Manager of long lead time items.

B. The Contractor shall order all required parts and equipment only after receipt of approved product submittals from the District's Project Manager.

C. Submit and receive approval of shop drawings prior to work commencement.

3.04 PATHWAY INSTALLATION

A. New Construction:
   1. Install 3/4" EMT in wall from hollow door frame to double-gang mud-ring and deep 4" Sq. back box on interior latch side above door frame at 96" AFF to top of box to accessible ceiling space or continuous conduit to nearest IDF.
   2. Install on the exterior latch side of the door a single-gang mud-ring and back box for exterior card reader at 48" AFF to top of box. Route EMT conduit to above door 4"-Sq. j-box.

B. Existing Construction:
   1. Refer to design documents.

2. Surface raceway and components shall be Wiremold 2300.

3.05 EQUIPMENT INSTALLATION

A. Power supplies and electric strike to use 24VDC and 16AWG wire.

B. Power supplies shall be centrally located in the nearest MDF/IDF.

C. Equipment to be wired and installed per the manufacturer's instructions.

D. Door controllers to be installed in nearest MDF/IDF unless noted otherwise on design documents.

E. Devices requiring POE power shall be connected to a POE switch in the nearest MDF/IDF data rack – verify with Electronics/Lock Shop for available PoE.

F. All wiring in enclosure shall have 12" minimum service loop for troubleshooting/repairs.

G. All shielded wiring to have shields grounded at the upstream end only. Floating shields is strictly prohibited.

H. Data drops to be installed inside the controller panel cabinet.

3.06 LABELING/SCHEDULES

A. All labels are to be machine generated black letters on white adhesive label stock that is appropriate for the installation environment (interior/exterior).

B. Device ID Labels are to be 1/4" lettering for mounting heights 10' AFF or less, 1/2" black lettering on white labels for mounting heights greater than 10' AFF.

C. Access Control Panel/Cabinet label – Panel ID on exterior top right of panel door.

D. Battery label – Install date.

E. Wiring label – Panel ID-Panel Schedule-Door ID.

F. Network Information label – MAC and IP address on interior top right of panel door.

G. Network Cable Termination label - MDF/IDF-port number.

H. Reader/Door schedule – A reader/door schedule and location drawing shall be printed and installed in a plastic sleeve inside the panel cover door.

3.09 CONFIGURATION

A. Program all network equipment with network IP address information obtained from Electronics/Lock Shop.

B. All equipment to be fully configured and tested for functionality prior to testing.

3.10 FIELD QUALITY CONTROL AND TESTING

A. Upon reaching substantial completion, perform a complete test and inspection of the system. If it is found to be installed and operating properly, notify District of your readiness to perform the formal Test & Inspection of the complete system.

B. Submit the Record Drawings (as-builts) to District for review prior to inspection.

C. During the formal Test & Inspection (Commissioning) of the system the Contractor shall have personnel available with tools and equipment to inspect wiring, devices, and system operation.

D. If corrections are needed, the Contractor will be provided with a Punch-List of all discrepancies. Perform the needed corrections in a timely fashion.

E. Notify the District when ready to perform a re-inspection of the installation.

F. The District or its representative to provide final sign-off for acceptance.

3.11 AS-BUILT DRAWINGS

A. See section 27 00 00 for requirements.

B. As-built riser diagram showing all access control components for site.

APPENDIX A – Pre-Approved Materials

DESCRIPTION	MFG	PART NUMBER
Door Controller (1-door)	Avigilon/Mercury	AC-MER-CONT-MP1501/MP1501
Door Controller (2-door)	Avigilon/Mercury	AC-MER-CONT-MP1502/MP1502
Door Controller (1-door/slave PoE)	Avigilon/Mercury	AC-MER-CON-MR62E/MR62e
2-Reader Interface Module	Avigilon/Mercury	AC-MER-CON-MR52/MR52-S3
Card Reader, (OSDP version)	Schlage	MT15, (MT15-485)
Card Reader/Mullion, (OSDP version)	Schlage	MT11, (MT11-485)
Power Supply/Cabinet (2 Door)	Avigilon/LifeSafety Power	AC-LSP-2DR-MER-LCK
Power Supply/Cabinet (8 Door)	Avigilon/LifeSafety Power	AC-LSP-8DR-MER-LCK
Power Supply/Cabinet (16 Door)	Avigilon/LifeSafety Power	AC-LSP-16DR-MER-LCK
Video Intercom	Avigilon	3.0C-H4VI-RO1-IR
Electronic Surface Strike (Rim Style)	Assa Abloy/HES	9600
Electronic Strike (Door Frame)	Assa Abloy/HES	8000C-630 805 Faceplate (Wood Frames)
Electronic Latch Set (Cylindrical)	Schlage	ND96EUPD-RX
Latch Retraction Motor (Von Duprin) with REX	Von Duprin	QEL-RX
Power Transfer	Von Duprin	EPT-10
Door Position Switch	George Risk Industries, Inc. Resideo	195-12WG 7939WG-BR
Battery 12VDC, 8AH	ELK, Powersonic	ELK-1280, PS-1280
Proximity Cards	Schlage	8543 - Serialized per District Requirements Via Schlage CardTrax
Armored Door Loop	SECO-LARM	SD-969-M15Q/S

END OF SECTION

SECTION 31 00 00

EARTHWORK

PART 1 - GENERAL

1.01 SUMMARY

A. RELATED SECTIONS

1. The General Conditions, Supplementary Conditions and Division 1 are fully applicable to this Section, as if repeated herein.

2. Section 01 57 13, Erosion Control

3. Section 31 23 33, Trenching and Backfilling.

4. Section 32 12 00, Asphalt Concrete Paving.

5. Section 32 16 00, Site Concrete.

1.02 SUBMITTALS

A. Refer to Section 01 33 00.

B. Manufacturer's Data: Submit list and complete descriptive data of all products proposed for use. Include manufacturer's specifications, published warranty or guarantee, installation instructions, and maintenance instructions.

1.03 QUALITY ASSURANCE

A. Use only new materials and products, unless existing materials or products are specifically shown otherwise on the Drawings to be salvaged and re-used.

B. All materials, components, assemblies, workmanship and installation are to be observed by the Owner's Inspector of Record. Work not so inspected is subject to uncovering and replacement.

C. The representatives of the Owner’s testing lab will not act as supervisor of construction, nor will they direct construction operations. Neither the presence of the Owner’s testing lab representatives nor the testing by the Owner’s testing lab shall excuse the contractors or subcontractors for defects discovered in their work during or following completion of the project. Correcting of inadequate compaction or moisture content is the sole responsibility of the contractor.

D. Tests (See Part 3 for Compaction Testing).

E. Contractor shall be solely responsible for all subgrades built. Failures resulting from inadequate compaction or moisture content are the responsibility of the contractor. Contractor shall be solely responsible for any and all repairs.

1.04 WARRANTY

A. Refer to General Conditions and Section 01 78 36.

1.05 REFERENCES AND STANDARDS

A. General: Site survey, included in the drawings, was prepared by Warren Consulting Engineers and is the basis for data regarding current conditions. While the survey is deemed generally accurate, there exists discrepancies and variations due to elapsed time, weather, etc. Existing dirt grades may vary 0.2 ft. from that shown.

B. Site Visitation: All bidders interfacing with existing conditions shall visit the site prior to bid to verify general conditions of improvements. Discrepancies must be reported prior to the bid for clarification.

C. ANSI/ASTM D698-e1 - Standard Test Methods for Laboratory Compaction Characteristics of Soil Using Standard Effort (56,000 ft-lbf/ft3 (2,700 kN-m/m3)).

D. ANSI/ASTM D1556-e1 - Test Method for Density of Soil in Place by the Sand-Cone Method.

E. ANSI/ASTM 698-12e2 Standard Test Methods for Laboratory Compaction Characteristics of Soil Using Standard Effort (12,400 ft-lbf/ft3 (600 kN-m/m3)).

F. ANSI/ASTM D 3017-05 Test Methods for Moisture Content of Soils and Soil-Aggregate Mixture by Nuclear Methods (Shallow Depth).

G. ANSI/ASTM D 4318-10e1 Test Method for Liquid Limit, Plastic Limit, and Plasticity Limit.

H. CALTRANS Standard Specifications Section 17.

I. CAL-OSHA, Title 8, Section 1590 (e).

J. Any work within the street, highway or right-of-way shall be performed in accordance with the requirement of the governmental agencies having jurisdiction, and shall not begin until all of those governing authorities have been notified.

1.06 DELIVERY, STORAGE AND HANDLING

A. Transport, store and handle in strict accord with the local jurisdiction.

B. Make delivery to job when notified by Contractor verifying that the job is ready to receive the work of this Section and that arrangements have been made to properly store, handle and protect such materials and work.

1.07 PROJECT CONDITIONS

A. Existing civil, mechanical and electrical improvements are shown on respective site plans to the extent known. Should the Contractor encounter any deviation between actual conditions and those shown, he is to immediately notify the Architect before continuing work.

B. Excavation dewatering may be necessary. Contractor shall provide any and all tools, equipment and labor necessary for excavation dewatering no matter what the source. Dewatering shall be continuous until all site utilities are installed and backfilled.

1.08 EXISTING SITE CONDITIONS

A. Contractor shall acquaint himself with all site conditions. If unknown active utilities are encountered during work, notify Architect promptly for instructions. Failure to notify will make Contractor liable for damage to these utilities arising from Contractor's operations subsequent to discovery of such unknown active utilities.

1.09 ON SITE UTILITY VERIFICATION AND REPAIR PROCEDURES

A. Ground-breaking requirements:

1. All underground work performed by a Contractor must be authorized by the District's Construction Manager or the Low Voltage Consultant prior to start of construction.
2. The Contractor is to obtain and keep the original School's construction utility site plans on site during all excavation operations. Contractor can contact the District's Construction Manager, Facilities Manager, or the Low Voltage Consultant to procure the drawings.

B. Underground Utility Locating:

1. The contractor shall hire an Underground Utility Locating Service to locate existing underground utility pathways in areas affected by the scope of work for excavation.
2. Contractor must use an underground utility locator service with a minimum of 3 years' experience. The equipment operator must have demonstrated experience.
3. The Underground Utility Locator Service must have the use of equipment with the ability to locate by means of inductive clamping, induction, inductive metal detection, conductive coupling, or TransOnde (Radio detection) to generate signals, passive locating (free scoping) for "hot" electric, and metal detector.
4. The Underground Utility Locator Service must be able to locate existing utilities at a depth of at least 72".
5. The Underground Utility Locator Service must be able to locate but are not limited to locating the following types of utility pathways:
   a) All conduit pathways containing 110 volt or greater 50-60Hz electrical wire.
   b) All conduit pathways containing an active cable TV system.
   c) All conduit pathways containing wire or conductor in which a signal can be attached and generated without damaging or triggering the existing systems.
   d) All empty conduit pathways or pipe in which a signal probe or sonde (miniature transmitter) can be inserted.
   e) All conduit pathways containing non-conductive cables or wires in which a signal probe or sonde (miniature transmitter) can be inserted.
   f) All plastic and other nonconductive water lines in which a TransOnde Radio detection) or other "transmitter" can be applied to create a low frequency pressure waive (signal) without damaging or triggering the existing systems.
   g) All copper or steel waterlines and plastic or steel gas lines
6. All markings made by the Underground Utility Locator Service or other shall be clear and visible.
7. The contractor shall maintain all markings made by Underground Utility Locator Service or other

throughout the entire length of the project.

8. The Underground Utility Locator Service shall provide the contractor with two sets of maps showing the location of utilities and average depth. They will be referenced to permanent buildings. Contractor will deliver one copy to the district at no additional charge.
9. Contractor is responsible to contact Underground Service Alert (U.S.A. 800/227-2600) and receive clearance prior to any excavation operations.
10. Contractor shall inform the (District's Construction Manager) (Architect) (Owner) no later than five (5) days prior to the date scheduled for the utility locator service to be on site.

1.10 PROTECTION

A. Adequate protection measures shall be provided to protect workmen and passers-by on and off the site. Adjacent property shall be fully protected throughout the operations. Blasting will not be permitted. Prevent damage to adjoining improvements and properties both above and below grade. Restore such improvements to original condition should damage occur. Replace trees and shrubs outside building area disturbed by operations.

B. In accordance with generally accepted construction practices, the Contractor shall be solely and completely responsible for working conditions at the job site, including safety of all persons and property during performance of the work. This requirement shall apply continuously and shall not be limited to normal working hours.

C. Any construction review of the Contractor's performance conducted by the Geotechnical Engineer is not intended to include review of the adequacy of the Contractor's safety measures, in, on, or near the construction site.

D. Provide shoring, sheeting, sheet piles and or bracing to prevent caving, erosion or gullying of sides of excavation.

E. Surface Drainage: Provide for surface drainage during period of construction in manner to avoid creating nuisance to adjacent areas. The contractor shall make a reasonable effort on a daily basis to keep all excavations and the site free from water during entire progress of work, regardless of cause, source, or nature of water.

F. Adjacent streets and sidewalks shall be kept free of mud, dirt or similar nuisances resulting from earthwork operations.

G. The site and adjacent influenced areas shall be watered as required to suppress dust nuisance. Dust control measures shall be in accordance with the local jurisdiction.

1.11 SEASONAL LIMITS

A. No fill material shall be placed, spread or rolled during unfavorable weather conditions. When work is interrupted by rains, fill operations shall not be resumed until field tests indicate that moisture content and density of fill are satisfactory.

B. Excessively wet fill material shall be bladed and aerated per section 3.08, B.

1.12 TESTING

A. General: Refer to Section 01 45 00 – Quality Requirements.

B. Geotechnical Engineer: Owner is retaining a Geotechnical Engineer to determine compliance of fill with Specifications, and to direct adjustments in fill operations. Costs of Geotechnical Engineer will be borne by Owner; except those costs incurred for re-tests or re-inspection will be paid by Owner and back charged to Contractor.

1. If Contractor elects to process or mine onsite materials for use as Suitable Fill, Aggregate Sub Base, Aggregate Base, Rock, Crushed Rock or sand the cost of all testing of this material shall be paid for by the Contractor.
2. Testing of import fill for compliance with Department of Toxic Substance Control (DTSC) shall be paid for by the Contractor.

1.13 ARCHEOLOGICAL AND CULTURAL RESOURCES

A. If archeological or cultural resources are discovered during the Work, the Contractor must cease all construction operations in the vicinity of the discovery until a qualified archeologist can assess the value of these resources and make recommendations to the State Historic Preservation Officer. Archeological and cultural resources include artifacts, large amounts of bone, shell, or flaked stone, and other evidence of human activity. If the State Historic Preservation Officer or the Owner directs that work be temporarily ceased at the location of an archeological or cultural find, the Contractor must temporarily suspend work at the location.

PART 2 - PRODUCTS

2.01 MATERIALS

A. Engineered Fill Materials: All fill shall be of approved local materials supplemented by imported fill if necessary. "Approved" local materials are defined as local soils tested and approved by Geotechnical Engineer free from debris, and concentrations of clay and organics; and contain rocks no larger than 3-inches in greatest dimension. The soil and rock should be thoroughly blended so that all rock is surrounded by soil. This may require mixing of the soil and rock with a dozer prior to placement and compaction. Clods, rocks, hard lumps or cobbles exceeding 3-inches in final size shall not be allowed in the upper 12 inches of any fill.

B. Imported Engineered Fill Material: Imported fill may be required to complete work. Proposed import fill material shall meet the above requirements; shall be similar to the native soils. Import fill shall meet the above requirements; shall have plasticity index of 12 or less; an Expansion Index of 20 or less; be free of particles greater than 3-inches in largest dimension; be free of contaminants and have corrosion characteristics within the acceptable limits. <u>All import fill material shall be tested and approved by Soils Engineer prior to transportation to the site.</u> Proposed fill material shall comply with DTSC guidelines to include Phase 1 environmental site assessment and related tests. Refer to the October 2001 DTSC Information Advisory for clean imported fill material.

1. DTSC TESTING: Site work contractor is to coordinate testing with an analytical lab, hired by the owner, licensed by the State of California for the DTSC testing. The costs associated with the testing will be paid by the contractor.
2. DTSC testing shall include documentation as to the previous land use, location, and history. Soils

shall be analyzed for all compounds of concern to ensure the imported soil is uncontaminated and acceptable. Testing shall be performed per the recommendations included in DTSC Imported Fill Advisory http://www.dtsc.ca.gov/Schools/upload/SMP FS Cleanfill-Schools.pdf). Soils shall be tested prior to import to the project site.
Lab shall determine geographically which tests and analysis comparison will be appropriate for the testing. (CAM 17 / Title 22); (RWQCB) Regional Water Quality Control Board; or (OEHHA) Office of Environmental Health Hazard Assessment.

3. Frequency of testing shall be conducted in accordance with DTSC's Imported Fill Advisory as follows;

Fill Material Sampling Schedule

Area of Individual Borrow Area	Sampling Requirements
2 Acres or less	Minimum of 4 samples
2 to 4 Acres	Minimum of 1 sample every ½ Acre
4 to 10 Acres	Minimum of 8 Samples
Greater than 10 Acres	Minimum of 8 locations with 4 subsamples per location

Volume of Borrow Area Stockpile

Up to 1,000 Cubic Yards	1 sample per 250 cubic yards
1,000 to 5,000 Cubic Yards	4 samples for the first 1000 cubic Yards + 1 sample per each additional 500 cubic yards
Greater than 5,000 Cubic Yards	12 samples for the first 5,000 cubic yards + 1 sample per each additional 1,000 cubic yards

4. Reports/ Documentation

   a. Results of the testing analysis shall be sent to the Owner; Architect; Project Inspector, Project Civil Engineer, DTSC, and DSA. Letter shall reference DSA file and application numbers.

C. Landscape Backfill Material:

   1. The top 2" of native topsoil stripped from the site may be used for landscape backfill material.

D. Water: Furnish all required water for construction purposes, including compaction and dust control. Water shall be potable.

E. Aggregate Base: Provide Class 2 3/4" Aggregate Base conforming to standard gradation as specified in Cal Trans Standard Specifications, Section 26,-1.02A.

PART 3 – EXECUTION

3.01 INSPECTION LAYOUT AND PREPARATION

A. Prior to installation of the work of this Section, carefully inspect and verify by field measurements that installed work of all other trades is complete to the point where this installation may properly commence

B. Layout all work, establish grades, locate existing underground utilities, set markers and stakes, setup and maintain barricades and protection facilities; all prior to beginning actual earthwork operations. Layout and staking shall be done by a licensed Land Surveyor or Professional Civil Engineer.

C. Verify that specified items may be installed in accordance with the approved design.

D. In event of discrepancy, immediately notify Owner and the Architect. Do not proceed in discrepant areas until discrepancies have been fully resolved.

3.02 PERFORMANCE

A. GENERAL:

1. General: Do all grading, excavating and cutting necessary to conform finish grade and contours as shown. All cuts shall be made to true surface of subgrade.
2. Archaeological Artifacts: Should any artifacts of possible historic interest be encountered during earthwork operations, halt all work in area of discovery and immediately contact the Architect for notification of appropriate authorities.
3. Degree of Compaction: Percentage of maximum density, hereinafter specified as degree of compaction required, means density equivalent to that percentage of maximum dry density determined by ASTM D1557 Compaction Test method, and such expressed percentage thereof will be minimum acceptable compaction for specified work.
4. Moisture Content: Moisture content shall be as noted below and as called for on the plans. Moisture content shall be maintained until subgrade is covered by surfacing materials.

3.03 DEMOLITION, DISPOSAL AND DISPOSITION OF UNDESIRABLE MAN-MADE FEATURES

A. All other obstructions, such as abandoned utility lines, septic tanks, concrete foundations, and the like shall be removed from site. Excavations resulting from these removal activities shall be cleaned of all loose materials, dish shaped, and widened as necessary to permit access for compaction equipment. Areas exposed by any required over-excavation should be scarified to a depth of 12", moisture-conditioned to 2% above optimum moisture content, and recompacted to at least 90% of the maximum dry density.

3.04 TESTING AND OBSERVATION

A. All grading and earthwork operations shall be observed by the Geotechnical Engineer or his representative, serving as the representative of the Owner.

B. Field compaction tests shall be made by the Geotechnical Engineer or his representative. If moisture content and/or compaction are not satisfactory, Contractor will be required to change equipment or procedure or both, as required to obtain specified moisture or compaction. Notify Geotechnical Engineer at least 48 hours in advance of any filling operation.

C. Earthwork shall not be performed without the notification or approval of the Geotechnical Engineer or

his representative. The Contractor shall notify the Geotechnical Engineer at least two (2) working days prior to commencement of any aspect of the site earthwork.

D. If the Contractor should fail to meet the compaction or design requirements embodied in this document and on the applicable plans, he shall make the necessary readjustments until all work is deemed satisfactory, as determined by the Geotechnical Engineer or Architect/Engineer.

E. After each rain event Geotechnical Engineer shall test fill material for optimum moisture. Do not place any fill material until desired moisture is achieved.

3.05 CLEARING AND GRUBBING

A. Prior to grading, remove all debris off-site. Remove trees and brush including the root systems. Holes resulting from tree and brush removal should be prepared and backfilled in accordance with paragraphs 3.07, 3.08, 3.09, and 3.10. This may require deepening and/or widening the holes to adequately remove disturbed soil and provide room for compaction equipment. Strip the surface of all organics. Stripping's meeting the requirements of Section 32 90 00 may be used in landscape areas only.

3.06 CUTTING

A. Do all cutting necessary to bring finish grade to elevations shown on Drawings.

B. When excavation through roots is necessary, cut roots by hand.

C. Carefully excavate around existing utilities to avoid unnecessary damage. The contractor shall anticipate and perform hand work near existing utilities as shown on the survey, without additional claims or cost.

3.07 SUBGRADE PREPARATION

A. Grade compact and finish all subgrades within a tolerance of 0.10' of grades as indicated on Drawings and so as not to pool water. Subgrade within building pads and concrete walks shall be within 0.05' of grades indicated.

B. After clearing, grubbing and cutting, subsurface shall be plowed or scarified to a depth of at least 12", until surface is free from ruts, hummocks or other uneven features and uniform and free from large clods. Moisture condition to 2% above optimum moisture content and recompact to at least 90% of the maximum dry density as determined by ASTM Test Method D1557. If the existing soils are at a water content higher than specified, the contractor shall provide multiple daily aerations by ripping, blading, and/or disking to dry the soils to a moisture content where the specified degree of compaction can be achieved. After seven consecutive working days of daily aerations, and the moisture content of the soil remains higher than specified, the contractor shall notify the architect. If the existing soils have a moisture content lower than specified, the contractor shall scarify, rip, water and blade existing soil to achieve specified moisture content. The contractor shall make proper allowance in schedule and methods to complete this work.

C. Subgrade in areas to receive landscaping shall be compacted to 90%.

D. Where Contractor over-excavates building pads through error, resulting excavation shall be

recompacted as engineered fill at Contractor's expense.

3.08 PLACING, SPREADING AND COMPACTING FILL MATERIAL IN PAVEMENT AREAS

A. Selected fill material shall be placed in layers which, when compacted, shall not exceed 6 inches in compacted thickness. Each layer shall be spread evenly and thoroughly mixed to insure uniformity in moisture content.

B. Selected fill material shall be moisture-conditioned to specified moisture content. Selected fill material shall be unfrozen. When moisture content of fill material is below that specified, add water until proper moisture content is achieved. When moisture content is above that specified, aerate by blading or other methods mentioned in 3.08 B until moisture content is satisfactory.

C. After each layer has been placed, mixed and spread evenly, it shall be thoroughly compacted to a minimum of 90% as determined by the ASTM D1557 Compaction Test. Compact each layer over its entire area until desired density has been obtained.

D. Recompaction of Fill in Trenches and Compaction of Fill Adjacent to Walls: Where trenches must be excavated, backfill with material excavated. Place in lifts that when compacted do not exceed 6”, moisture conditioned to 2% above optimum moisture content, and compact to a minimum of 90% relative compaction in building pad and paved areas, and to 90% relative compaction in landscape areas.

E. Jetting of fill materials will not be allowed.

3.09 FINAL SUBGRADE COMPACTION

A. Paved Areas: Upper 12" of all final subgrades supporting concrete flatwork shall be brought to specified moisture content and shall be uniformly compacted to not less than 90% of maximum dry density, regardless of whether final subgrade elevation is attained by filling, excavation, or is left at existing grade. Upper 8” of subgrade supporting asphalt pavement shall be compacted to 95%. After acceptance of final compaction test, contractor shall maintain the required moisture content of subgrade until concrete flatwork is placed.

B. Other Fill and Backfill: Upper 12” of all other final subgrades or finish grades shall be compacted to 90% of maximum dry density.

C. Gravel Fill: Do not place compacted gravel fill until after underground work and foundations are in place. Compact gravel fill with vibratory plate or similar equipment to preclude settlement.

3.10 PLACING, SPREADING, AND COMPACTION OF LANDSCAPE BACKFILL MATERIALS

A. All landscaped areas shall receive topsoil. After subgrade under landscape area has been scarified and brought to 90% maximum dry density, top soil shall be placed evenly to depth of 12" at 85% of maximum dry density.

B. Project Inspector must verify that materials are uniformly spread to minimum depth specified.

3.11 SLOPE CONSTRUCTION

A. Cut slopes shall be constructed to no steeper than 3:1 (horizontal:vertical). Fill slopes shall be constructed to no steeper than 3:1 (horizontal:vertical). Prior to placement of fill on an existing slope the existing slope shall be benched. The benches shall be in a ratio of 3 horizontal to 1 vertical. The face of the fill slopes shall be compacted as the fill is placed, or the slope may be overbuilt and then cut back to the design grade. Compaction by track walking will not be allowed.

3.12 FINISH GRADING

A. At completion of project, site shall be finished graded, as indicated on Drawings. Finish grades shall be "flat graded" to grades shown on the drawing. Mounding of finish grades will not be allowed unless otherwise directed on the landscape drawings. Tolerances for finish grades in drainage swales shall be +-0.05'. Tie in new and existing finish grades. Leave all landscaped areas in finish condition for lawn seeding. Landscaped planters shall be graded uniformly from edge of planter to inlets. If sod is used for turf areas the finish grade on which it is placed shall be lowered to allow for sod thickness.

B. All landscape areas shall be left free of rock or foreign material as specified in Section 32 90 00.

C. All landscape areas shall be approved by Architect prior to any planting.

3.13 SURPLUS MATERIAL

A. Excavated material not required for grading or backfill shall be removed from site at contractor's expense.

3.14 CLEANING

A. Refer to Section 01 74 00.

B. Remove from fill all vegetation, wood, form lumber, casual lumber, and shavings, in contact with ground; buried wood will not be permitted in any fill.

END OF SECTION

SECTION 31 13 16

TREE PROTECTION

PART 1 – GENERAL

1.01 SUMMARY

A. Section Includes:

1. Tree protection complete as shown and as specified.

B. Related Sections:
1. The General Conditions, Supplementary Conditions and Division 1 are fully applicable to this Section, as if repeated herein.
2. Section 02 41 00 – Site Demolition.

1.02 SUBMITTALS

A. Contractor shall submit Tree Protection Area plan to Architect outlining all trees and plants listed by number to be protected and their groupings. All trees and plants shall be grouped in their own Fenced Tree Protection Areas as shown in Drawings.

B. Contractor shall submit to Landscape Architect in writing a schedule including any and all activity inside Fenced Tree Protection Areas. This schedule to include but not limited to the dates fences are initially installed, altered and dates of fence replacement. Intent of these provisions is that the Tree Protection Zone (TPZ) are fenced for the entire duration with only exceptions of short intervals or specifically defined construction activity needs. Revise schedule as directed by Architect.

C. Provide a Mediation Plan to keep existing trees and planting irrigated during construction.

1.03 WARRANTY

A. Guarantee all workmanship and materials hereunder against defective workmanship and materials, including damage by leaks and settlement of irrigation trenches, for the duration specified in Division 01 of these Specifications. (The Contractor is not responsible for vandalism or theft after date of final acceptance.)

PART 2- PRODUCTS

2.01 MATERIALS

A. Use materials as specified; any deviation from the Specifications must first be approved by the Owner's Representative in writing. All material containers or certificates shall be clearly marked by manufacturer as to contents for inspection.

B. Trunk Protection constructed of:

1. 20-foot long 2x6 wood boards or length needed to protect the trunk if tree trunk is shorter than 20'.
2. Metal wire. Gauge strong enough to tie the boards around the trunk of the tree.

C. Tree Protection Zone Fencing:

1. 4-foot-tall snow fencing or 6-foot-tall metal chain link construction fencing per the discretion of the Landscape Architect or District Representative.

D. Bark Mulch: Untreated, shredded cedar.

PART 3 – EXECUTION

3.01 PREPARATION

A. Maintain pre-existing moisture levels.

B. Maintain areas inside the fenced tree protection area including lawn mowing, leaf removal, operation and repair of irrigation.

C. Protect root systems from flooding, erosion, excessive watering and drying resulting from dewatering or other operations:

D. Prohibitions - DO NOT:

1. Allow run off or spillage of damaging materials in vicinity of root systems,
2. Rinse tools or equipment under trees,
3. Store materials, stockpile soil, park or drive vehicles within drip lines or in areas with plants,
4. Cut, break skin or bark, bruise roots or branches,
5. Allow fires under and adjacent trees and plants,
6. Discharge exhaust under foliage,
7. Secure cable, chain, or rope to trees,
8. Change grade within drip line of trees without Landscape Architect's approval,
9. Lime shall not be used.

3.02 INSTALLATION

A. Tree Trunk Protection

1. Conform to requirements for trees and plants to be retained, per 3.01, above.
2. Install boards vertically around tree and bind together with wire to protect the bark 360 degrees around the entire tree prior to start of any demolition and construction. Boards are not to dig into bark.
3. Major scaffold limbs may require plastic fencing or straw waddles to be wrapped around them

to protect them.

B. Tree Dripline Protection

1. The Tree Protection Zone (TPZ) is a restricted area around the base of the tree with a radius of one foot (1’) for every inch of tree trunk diameter or ten feet, which is greater, enclosed by tree protection zone fencing.
2. Signage designating the protection zone and penalties for violations shall be secured in prominent location on each protection fence.

C. Requirements for Trees to be Protected

1. Duration: Tree protection shall be erected before demolition, grading, or any construction begins and remain in place until final inspection of the project.
2. Conform to requirements for trees and plants to be retained, per 3.01, above.
3. Architect shall give final review of Tree Protection before construction to begin. Revise schedule as directed by Architect.
4. Vehicle movement within the TPZ will only be allowed for construction equipment.
   a. Within dripline, apply 10-inch layer of mulch over geotextile fabric.

5. Perform trenching operations within the TPZ of the tree so that:
   a. Digging shall be by hand using narrow trenching shovel,
   b. No roots larger than 2" diameter are cut and utilities are routed around or below them,
   c. Roots smaller than 2" diameter are cut with sharp tools, saws, loppers- not torn, chopped or broken.

6. Where roots are exposed:
   a. Do not allow the roots to dry out,
   b. On the same day the excavation is made, provide temporary backfill to original grade at tree roots,
   c. Or cover roots with 4 layers of wet untreated burlap, made wet each day, including weekends.

7. Roots larger than 3" in diameter are not to be cut without review and approval of Arborist.

3.03 REPAIR/RESTORATION:

A. It shall be the responsibility of Contractor to repair or replace any damaged trees.

B. Repair trees damaged by operations:

1. within 24 hours of damage,
2. to satisfaction of Landscape Architect,
3. to ISA Pruning Standards.

C. Replace repaired trees where repair has not restored them to health or aesthetics:

1. within 6 months of request to replace,
2. to the satisfaction of Landscape Architect,
3. with replacement plants of a size and variety matching those that were removed

D. Replaced trees and plants shall be the responsibility of Contractor to maintain in good health and aesthetics for the duration of the project from installation.

1. Contractor shall submit to Landscape Architect comprehensive maintenance plan for replacement tree, including but not limited to provisions for irrigation system independent of existing system.

E. Where suitable replacement of trees and plants are not available:

1. Contractor shall provide affidavits to Landscape Architect that they are not available.
2. Contractor shall provide compensation to the State at the following rates:
   a. $2000 for each caliper inch of any tree or plants removed under 12 inches.
   b. $4000 for each caliper inch of any tree or plants removed 12 inches or more.
   c. Caliper of trees and plants measured at 6 inches above grade.
   d. Caliper defined here as thickness of diameter, measured in inches.

F. Soil Contamination:

1. Contractor shall remove soil that has been contaminated during the performance of the Work by oil, solvents, and other materials which could be harmful to trees and plants, and replace with good soil, at Contractor's expense.

END OF SECTION

SECTION 31 23 33

TRENCHING AND BACKFILLING

PART 1 - GENERAL

1.01 SUMMARY

A. RELATED SECTIONS

1. The General Conditions, Supplementary Conditions and Division 1 are fully applicable to this Section, as if repeated herein.
2. Section 01 57 13, Erosion Control
3. Section 31 23 33, Trenching and Backfilling.
4. Section 32 12 00, Asphalt Concrete Paving.
5. Section 32 16 00, Site Concrete.

1.02 QUALITY ASSURANCE

A. Use only new materials and products, unless existing materials or products are specifically shown otherwise on the Drawings to be salvaged and re-used.

B. All materials, components, assemblies, workmanship and installation are to be observed by the Owner's Inspector of Record. Work not so inspected is subject to uncovering and replacement.

C. Contractor / Installer shall have been in business for five (5) years providing/finishing similar size projects and complexity.

1.03 SUBMITTALS

A. Refer to Section 01 33 00.

B. Submit Manufacturers data and shop drawings.

1.04 WARRANTY

A. Submit fully executed warranty for work and materials in this section per 01 78 36.

1.05 REFERENCES AND STANDARDS

A. California Building Code current edition.

B. California Plumbing Code current edition.

1.06 DELIVERY, STORAGE AND HANDLING

A. Transport, store and handle in strict accord with the local jurisdiction.

B. Make delivery to job when notified by Contractor verifying that the job is ready to receive the work of this Section and that arrangements have been made to properly store, handle and protect such materials and work.

1.07 PROJECT CONDITIONS

A. Contractor shall acquaint himself with all existing site conditions. If unknown active utilities are encountered during work, notify Architect promptly for instructions. Failure to notify will make Contractor liable for damage to these utilities arising from Contractor's operations subsequent to discovery of such unknown active utilities.

B. Field verify that all components, backing, etc. by others are installed correctly to proceed with installation of products as herein specified.

C. Trench dewatering may be necessary. Contractor shall provide any and all tools, equipment and labor necessary for trench dewatering no matter what the source. Dewatering shall be continuous until all site utilities are installed and backfilled.

1.08 PROTECTION

A. Adequate protection measures shall be provided to protect workers and passers-by on and off the site. Adjacent property shall be fully protected throughout the operations. Blasting will not be permitted. Prevent damage to adjoining improvements and properties both above and below grade. Restore such improvements to original condition should damage occur. Replace trees and shrubs outside building area disturbed by operations. Repair all trenches in grass areas with new sod (seeding not permitted) and "stake-off" for protection.

B. Contractor shall be solely and completely responsible for working conditions at the job site, including safety of all persons and property during performance of the work. This requirement shall apply continuously and shall not be limited to normal working hours.

C. Any construction review of the Contractor's performance conducted by the Architect or Owner is not intended to include review of the adequacy of the Contractor's safety measures, in, on or near the construction site.

D. Provide shoring, sheeting, sheet piles and or bracing to prevent caving, erosion or gullying of sides of excavation.

E. Surface Drainage: Provide for surface drainage during period of construction in manner to avoid creating nuisance to adjacent areas. Keep all excavations free from water during entire progress of work, regardless of cause, source or nature of water.

F. Adjacent streets and sidewalks shall be kept free of mud, dirt or similar nuisances resulting from earthwork operations.

G. The site and adjacent influenced areas shall be watered as required to suppress dust nuisance.

H. Trees: Carefully protect existing trees which are to remain.

1.09 TRENCH SAFETY PROVISIONS

A. General Contractor shall be solely responsible for safety design, construction and coordination with agencies having jurisdiction. If such plan varies from shoring system standards established by Construction Safety Orders, plan shall be prepared by registered civil or structural engineer.

B. Nothing herein shall be deemed to allow use of shoring, sloping or protective system less effective than that required by Construction Safety Orders of California State Division of Industrial Safety.

C. When trenching through paved surface, provide steel trench plates to cover open trenches daily until trenches are backfilled.

1.10 SEASONAL LIMITS

A. No backfill material shall be placed, spread or rolled during unfavorable weather conditions. When work is interrupted by heavy rains, full operations shall not be resumed until field tests indicate that moisture content and density of fill are satisfactory.

B. Material above optimum moisture shall be processed per section 310000, 3.08, B.

1.11 TESTING

A. General: Refer to Section 01 45 00 – Quality Requirements.

PART 2 – PRODUCTS

2.01 MATERIALS

A. Backfill materials: Pipeline and conduit trench backfill as shown on the plans and as specified below.

1. ¾ inch crush rock.
2. Native Materials: Soil native to Project Site, free of wood, organics, and other deleterious substances. Rocks shall not be greater than 3-inches.
3. Sand: Fine granular material, free of organic matter, mica, loam or clay.
4. Lean Mix Concrete/Controlled Density Backfill: 2 sacks cement slurry.
5. Class 2 aggregate base, ¾” rock, per Caltrans section 26-1.02B

B. Water: Furnish all required water for construction purposes, including compaction and dust control. Water shall be potable.

C. Provide other bedding and backfill materials as described and specified in Section 31 00 00, Section 33 40 00 and Divisions 15 and 16.

PART 3 – EXECUTION

3.01 INSPECTION

A. Verification of Conditions:

1. Examine areas and conditions under which work is to be performed.
2. Identify conditions detrimental to proper or timely completion of work and coordinate with General Contractor to rectify.

3.02 COORDINATION

A. General Contractor shall coordinate work as herein specified, in accordance with drawings and as required to complete scope of work with all related trades.

3.03 INSTALLATION

A. Perform work in accordance with pipe manufacturer's recommendations, as herein specified and in accordance with drawings.

3.04 TRENCHING

A. Make all trenches open vertical construction with sufficient width to provide free working space at both sides of trench around installed item as required for caulking, joining, backfilling and compacting; not less than 12 inches wider than pipe or conduit diameter, unless otherwise noted.

B. Carefully excavate around existing utilities to avoid unnecessary damage. The contractor shall anticipate and perform hand work near existing utilities as shown on the survey, without additional claims or cost.

C. Trench straight and true to line and grade with bottom smooth and free of edges or rock points.

D. Where depths are not shown on the plans, trench to sufficient depth to give minimum fill above top of installed item measured from finish grade above the utility as follows:

1. Sewer pipe: depth to vary
2. Storm drain pipe: depth to vary
3. Water pipe - Fire Supply: 36 inches
4. Water pipe – Domestic Supply: 30 inches

E. Where trench through existing pavement saw cut existing pavement in straight lines. Grind existing asphalt on each side of trench 3" wide x ½ the depth of the section. Apply tact coat to vertical surfaces before installing new asphalt. Replace asphalt and concrete pavement sections to matched existing conditions. In concrete pavement provide expansion and control joints to match existing joint layout.

3.05 BACKFILL

A. Pipe Trench Backfill is divided into three zones:

1. Bedding: Layer of material directly under the pipe upon which the pipe is laid.
2. Pipe Zone: Backfill from the top of the bedding to 6 inches (compacted) over the top of the pipe.
3. Upper Zone: Backfill between top of Pipe Zone and to surface of subgrade.

B. Bedding: Type of material and degree of compaction for bedding backfill shall be as defined in the Details and Specifications.

C. Pipe Zone and Upper Zone Backfill:

1. Type of material and degree of compaction Pipe Zone and Upper Zone Backfill shall be as required by Drawings, Details, & Specifications.
2. Upper Zone Backfill shall not be placed until conformance of Bedding and Pipe Zone Backfill with specified compaction test requirements has been confirmed.
3. Backfill shall be brought up at substantially the same rate on both sides of the pipe and care shall be taken so that the pipe is not floated or displaced. Material shall not be dropped directly on pipe.

D. Backfill Compaction:

1. Backfill shall be placed in layers which, when compacted shall not exceed 6 inches in thickness. Each layer shall be spread evenly and thoroughly mixed to insure uniformity. Do not backfill over, wet, frozen or soft subgrade surfaces. Employ a placement method that does not disturb or damage foundation walls, perimeter drainage, foundation damp-proofing, waterproofing or protective cover.
2. When moisture content of fill material is below that required to achieve specified density, add water until proper moisture content is achieved. When moisture content is above that required, aerate by blading or other methods until specified moisture content is met, see section 310000, 3.08, B.
3. After each layer has been placed, mixed and spread evenly, it shall be thoroughly compacted to 90% of maximum dry density while at specified moisture content. Compact each layer over its entire area until desired density has been obtained.
4. The top 12 inches of subgrade compaction under pavement or building shall be per Earthwork section 31 00 00.
5. Compaction: All backfill operations shall be observed by the Inspector of Record and/or Geotechnical Engineer. Field density tests shall be made to check compaction of fill material. If densities are not satisfactory, Contractor will be required to change equipment or procedure or both, as required to obtain specified densities. Notify Inspector and Architect at least 24 hours in advance of any operation.

3.06 TRENCH AND SITE RESTORATION

A. Finished surface of trenches shall be restored to a condition equal to, or better than the condition as existed prior to excavation work.

3.07 PROTECTION

A. Protect existing surfaces, structures, and utilities from damage. Protect work by others from damage. In the event of damage, immediately repair or replace to satisfaction of Owner.

B. Repair existing landscaped areas to as new condition. Replant trees, shrubs or groundcover with existing materials if not damaged or with new materials if required. Replace damaged lawn areas with sod, no seeding will be permitted.

C. Replace damaged pavement with new compatible matching materials. Concrete walks to be removed to nearest expansion joint and entire panel replaced. Asphalt to be cute neatly and replaced with new materials.

D. Any existing materials removed or damaged due to trenching to be returned to new condition.

3.08 SURPLUS MATERIAL

A. Remove excess excavated material, unused materials, damaged or unsuitable materials from site.

3.09 CLEANING

A. Refer to Section 01 74 00.

B. Contractor will keep the work areas in a clean and safe condition so his rubbish, waste, and debris do not interfere with the work of others throughout the project and at the completion of work.

C. After completion of work in this section, remove all equipment, materials, and debris. Leave entire area in a neat, clean, acceptable condition.

END OF SECTION

SECTION 32 12 00

ASPHALT CONCRETE PAVING

PART 1 - GENERAL

1.01 SUMMARY

A. SECTION INCLUDES:

1. Asphalt paving mix designs.
2. Aggregate Base Course.
3. Seal Coat and Striping.

B. RELATED SECTIONS

1. The General Conditions, Supplementary Conditions and Division 1 are fully applicable to this Section, as if repeated herein.
2. Section 01 50 00, Construction Facilities and Temporary Controls.
3. Section 310000, Earthwork.

1.03 QUALITY ASSURANCE

A. Use only new materials and products, unless existing materials or products are specifically shown otherwise on the Drawings to be salvaged and re-used.

B. All materials, components, assemblies, workmanship and installation are to be observed by the Owner's Inspector of Record. Work not so inspected is subject to uncovering and replacement.

C. The representatives of the Owner’s testing lab will not act as supervisor of construction, nor will they direct construction operations. Neither the presence of the Owner’s testing lab representatives nor the testing by the Owner’s testing lab shall excuse the contractors or subcontractors for defects discovered in their work during or following completion of the project. Correcting inadequate compaction is the sole responsibility of the contractor.

D. Contractor shall provide verification that asphalt mix temperature meets the requirements of this specification at time of application.

E. Contractor shall be solely responsible for all subgrades built. Any repairs resulting from inadequate compaction are the responsibility of the contractor.

F. Sieve analysis from testing laboratories identifying rock/sand percentages within the asphalt mix shall have a testing date within 90 days of contract signing.

G. Sieve analysis from a testing laboratory identifying rock/sand percentages within the class 2 aggregate base rock shall have a testing date within 90 days of contract signing.

1.04 SUBMITTALS

A. Refer to Section 01 33 00.

B. Manufacturer's Data: Submit list and complete descriptive data of all products proposed for use. Include manufacturer's specifications, published warranty or guarantee, installation instructions, and maintenance instructions.

1.05 WARRANTY

A. Refer to General Conditions and Section 01 78 36.

1.06 REFERENCES AND STANDARDS

A. ANSI/ASTM D698-00 - Test Methods for Moisture-Density Relations of Soils and Soil-Aggregate Mixtures, Using 5.5 lb (2.49 Kg) Rammer and 12 inch (304.8 mm) Drop.

B. ANSI/ASTM D1556-00 - Test Method for Density of Soil in Place by the Sand-Cone Method.

C. ANSI/ASTM D1557-02 - Test Methods for Moisture-Density Relations of Soils and Soil-Aggregate Mixtures Using 10 lb. (4.54 Kg) Rammer and 18 inch (457 mm) Drop.

D. ANSI/ASTM D 3017-05 Test Methods for Moisture Content of Soils and Soil-Aggregate Mixture by Nuclear Methods (Shallow Depth).

E. ANSI/ASTM D 4318-05 Test Method for Liquid Limit, Plastic Limit, and Plasticity Limit.

F. CALTRANS Standard Specifications.

G. CAL-OSHA, Title 8, Section 1590 (e).

H. Any work within the street, highway or right-of-way shall be performed in accordance with the requirement of the governmental agencies having jurisdiction, and shall not begin until all of those governing authorities have been notified.

1.07 DELIVERY, STORAGE AND HANDLING

A. Transport, store and handle in strict accord with the local jurisdiction.

B. Make delivery to job when notified by Contractor verifying that the job is ready to receive the work of this Section and that arrangements have been made to properly store, handle and protect such materials and work.

1.08 PROJECT CONDITIONS

A. Environmental Requirements:

1. Base Course: Do not lay base course on muddy subgrade, during wet weather, or when atmospheric temperature is below 40 degrees F.
2. Asphalt Surfacing: Do not apply asphaltic surfacing on wet base, during wet weather, or when atmospheric temperature is below 50 degrees F.

B. Contractor shall acquaint himself with all site conditions. If unknown active utilities are encountered during work, notify Architect promptly for instructions. Failure to notify will make Contractor liable for damage to these utilities arising from Contractor's operations subsequent to discovery of such unknown active utilities.

C. Adequate protection measures shall be provided to protect workmen and passers-by on and off the site. Adjacent property shall be fully protected throughout the operations. Blasting will not be permitted. Prevent damage to adjoining improvements and properties both above and below grade. Restore such improvements to original condition should damage occur. Replace trees and shrubs outside building area disturbed by operations.

D. In accordance with generally accepted construction practices, the Contractor shall be solely and completely responsible for working conditions at the job site, including safety of all persons and property during performance of the work. This requirement shall apply continuously and shall not be limited to normal working hours.

E. Any construction review of the Contractor's performance conducted by the owner’s representative is not intended to include review of the adequacy of the Contractor's safety measures, in, on, or near the construction site.

F. Surface Drainage: Provide for surface drainage during period of construction in manner to avoid creating nuisance to adjacent areas. The contractor shall make a reasonable effort on a daily basis to keep all excavations and the site free from water during entire progress of work, regardless of cause, source, or nature of water.

G. Adjacent streets and sidewalks shall be kept free of mud, dirt or similar nuisances resulting from earthwork operations.

H. The site and adjacent influenced areas shall be watered as required to suppress dust nuisance. Dust control measures shall be in accordance with the local jurisdiction.

I. No fill material shall be placed, spread or rolled during unfavorable weather conditions. When work is interrupted by rains, fill operations shall not be resumed until field tests indicate that moisture content and density of fill are satisfactory.

1.09 TESTING

A. General: Refer to Section 01 40 00 – Quality Requirements.

B. Geotechnical Engineer: Owner is retaining a Geotechnical Engineer to determine compliance of fill with Specifications, and to direct adjustments in fill operations. Costs of Geotechnical Engineer will be borne by Owner; except those costs incurred for re-tests or re-inspection will be paid by Owner and backcharged to Contractor.

PART 2 - PRODUCTS

2.01 MATERIALS

A. Sterilant: Soil sterilizer shall be CIBA GEIGY's Pramatol 25-E or Thompson-Hayward Casoron.

1. Soil sterilizer shall be applied in strict accordance with manufacturer's instructions.

B. Base Course Aggregate: State Specifications, Section 26, Class 2 aggregate base (3/4" max.).

C. Asphalt Binder: Steam-refined paving asphalt conforming to State Specifications, Section 92, viscosity grade PG 64-10. Asphalt binder additives for HMA per Caltrans approved list of manufacturer's.

D. Liquid Asphalt Tack Coat: Per CALTRANS section 94.

E. Surface Course Aggregate: Mineral aggregates for Type "B" asphalt concrete, conforming to State Specifications 39-2.02, Type B, ½" maximum, medium grading. 3/8" maximum grading at Playcourt.

F. Seal Coat: shall be a pre-mixed asphalt emulsion blended with select fillers and fibers such as:

1. "Park-Top No. 302", Western Colloid Products.
2. "OverKote", Reed and Gram.
3. "Drivewalk", Conoco Oil.

G. Wood Headers and Stakes: Pressure treated.

H. Pavement Marking: Colors as directed by Architect. Colors of painted traffic stripes and pavement markings must comply with ASTM D 6628.

1. Waterborne traffic line - colors white, yellow and red, State specification PTWB-01R3.
2. Waterborne traffic line for the international symbol of accessibility and other curb markings – blue, red and green, Federal specification TT-P-1952F.

I. Precast Concrete Bumpers: 3000 psi at 28 day minimum strength; 48" length unless otherwise indicated; provide with steel dowel anchors and concrete epoxy.

J. Pavement Epoxy; K-Lite; Ktepx-590; Ennis Epoxy HPS2 or an approved equal.

K. Crack Filler;

1. Cracks up to ½": QPR model CAR08, 10oz asphalt crack filler; Star STA-FLEX Trowel Grade crack filler or approved equal.
2. Cracks ¼" – 1": "Docal 1100 Viscolastic, distributed by Conoco, Inc., Elk Grove, CA, (916) 685-9253, or approved equal.
3. Cracks greater than 1": Hot Mix, Topeka.

L. Reclaimed Asphalt Paugment (RAP). HMA Type A or Type B may be produced using RAP providing it does not exceed 15% of the aggregate blend.

2.02 MIXES

A. General: Plant mixed conforming to State Specifications, Section 39, Type B, ½" maximum, medium grading. 3/8" maximum grading shall be used at hardcourt.

B. Temperature of Hot Mix Asphalt: Not less than 275 degrees F nor more than 325 degrees F when added to aggregate.

C. Temperature of Hot Mix Aggregate: Not less than 250 degrees F nor more than 325 degrees F when asphalt is added.

D. Temperature of Hot Mix Asphalt Concrete: Asphalt shall be not less than 285 degrees at time of application, nor more than 350 degrees. Asphalt not meeting the required temperature shall not be used.

E. Temperature of Warm Mix Asphalt: Mixing and placement; Per the approved manufactures heat range recommendations for mixing and placement.

PART 3 - EXECUTION

3.01 EXAMINATION OF CONDITIONS

A. Conditions of Work in Place: Subsurfaces which are to receive materials specified under this Section shall be carefully examined before beginning work hereunder, and any defects therein shall be reported, in writing, to the Architect. Work shall not be started until such defects have been corrected. Starting of work shall imply acceptance of conditions as they exist.

3.02 PREPARATION

A. Sub-Grade: Clean, shape and compact to hard surface free from elevations or depressions exceeding 0.05’ in 10' from true plan. Compact per Section 31 00 00. Compaction and moisture content shall be verified immediately prior to placement of aggregate base. Proof roll subbase in presence of geotechnical engineer prior to placement of aggregate base.

B. Cleaning: Existing surfaces and new surface shall be clean of all dirt, sand, oil or grease. All cracks shall be cleaned and free of all debris and vegetation. Hose down entire area with a strong jet of water to remove all debris.

3.03 INSTALLATION

A. Headers:

1. General: Install as edging to asphalt paving, except where adjoining existing pavement, concrete curbs, walks or building.
2. Existing Headers: Remove existing headers where new paving will join existing. Saw cut existing asphalt to provide clean edge.
3. Lines and Levels: Install true to line and grade. Cut off tops of stakes 2-inches below top of header so they will not be visible on completion of job.

B. Asphalt Paving:

1. Base Course: Install in accord with State Specifications, Section 26. Compact to relative compaction of not less than 95%, ASTM D1557. The material shall be deposited on the subgrade in such a

manner as to provide a uniform section of material within five percent tolerance of the predetermined required depth. Deposition will be by spreader box or bottom dump truck to prevent segregation of the material. The material so deposited on the subgrade shall have sufficient moisture which, in the opinion of the Architect is adequate to prevent excessive segregation. It shall then be immediately spread to its planned grade and cross section. Undue segregation of material, excessive drifting or spotting of material will not be permitted. If in the opinion of the site geotechnical engineer, the material is unsuitably segregated, it shall be removed or completely reworked to provide the desired uniformity of the material.

a. Moisture content and compaction of base material shall be tested immediately prior to placement of asphalt paving.

2. Sterilant: Apply specified material at manufacturer's recommended rate. Applicator of sterilant material shall be responsible for determining location of all planter areas. Apply specified material over entire base course area just prior to application of asphalt. Follow manufacturer's printed directions.
3. Liquid Asphalt Tack Coat: Apply as "tack coat" to all vertical surfaces of existing paving, curbs, walks, and construction joints in surfacing against which paving is to be placed.
4. Asphalt Concrete Surface Course:
   a. Comply with State Specifications, 39-6 except as modified below.
      1) Final gradation shall be smooth, uniform and free of ruts, humps, depressions or irregularities, with a minimum density of 91% of the theoretical maximum specific gravity determined by California Test Method #309. Maximum variation 1/8 inch in 10' when measured with steel straightedge in any one direction. Test paved areas for proper drainage by applying water to cover area. Correct portions that do not drain properly by patching with plant mix. In no case shall accessible parking spaces or loading and unloading areas exceed 2% slope in any direction.
      2) Asphalt material shall be delivered to the project site in a covered condition to maintain acceptable temperature. Onsite inspector shall verify temperature of asphalt upon truck arrival to the site.
5. Placement and adjustment of Frames, Covers, Boxes and Grates: The Contractor shall set and adjust to finish grade all proposed and existing frames, covers, boxes, and grates of all manholes, drop inlets, drain boxes, valves, cleanouts, electrical boxes and other appurtenant structures prior to placement of asphaltic concrete.
6. Water Testing: All paved areas shall be water tested, to check drainage, in the presence of the project inspector prior to placement of seal coat. The surface of asphalt paving shall not vary more than 1/8 inch above or below the grade established on the plans. If variations in grade are present, they will be corrected by overlaying paving and/or pavement removal and replacement as directed by the Architect.
7. Patching: Cut existing paving square and plumb at all edges to be joined by new paving. In trenches; grind existing asphalt on each side of trench 3” wide x ½ the depth of the section. Apply tact coat to vertical surfaces before installing new work. Warp carefully to flush surface, with seal over joints, and feather edge. Sawcut, remove and patch existing paving where cutting is necessary for installation of piping or conduits under Divisions 2, 15 and 16.

C. Seal Coat:

1. Seal coat shall be applied no sooner than 30 days from time of asphalt placement, no exceptions.
2. Surface Preparation: surface and cracks shall be clean of all dirt, sand, oil or grease. All cracks shall be filled to a level condition after curing. Make multiple fill applications until a level condition is achieved. Failure to do so will be the reason for rejection. Hose down entire area with a strong jet of

water to remove all debris. Remove soft, loose, or otherwise damaged areas of asphalt concrete to full depth of damage and replace with compacted hot mix asphalt concrete as specified herein. Minor holes and imperfections may be patched using hot mix asphalt or mastic using sand/SS-1-H. Use wire brush for removal of oil and grease; prime with shellac or synthetic resin as recommended by manufacturer of pavement sealer material.

3. Seal Coat Seal Application: Thoroughly mix materials and apply in the presence of the onsite inspector. Failure to do so will be cause for rejection. Apply in accordance with manufacturer's written instructions.
   a. The minimum application rate for each applied coat shall be 30gals per 1000 sq. ft. Two coats of sealcoat will be required.
   b. Clean-Up and Precautions: As recommended by pavement sealer material manufacturer.

D. Pavement Marking: pavement markings shall be done only after the seal coat has thoroughly dried. Existing surfaces to be striped with traffic paint shall be cleaned of dust, dirt, grime, oil, rust or other contaminants which will impair the quality of work or interfere with proper bond of paint coats. Surfaces shall be thoroughly cleaned by whatever means necessary that will satisfactorily accomplish the purpose without damage to asphalt concrete. Provide measured layouts, temporary markings, templates, and other means necessary to provide required marking. Prepare and apply paint in accordance with manufacturer’s instructions; paint shall be applied by spray and shall achieve complete coverage free from voids and thin spots. Where indicated on the Drawings, paint parking stall strips, lettering, arrows, accessible symbols, playfield markings, etc. on asphalt concrete paving. Paint strips shall be 4 inches wide (except otherwise indicated) and applied with two (2) coats of herein specified Traffic Line Paint; white (except as otherwise specified or indicated).

1. Paints shall be delivered to the site in unopened containers.
   a. Paint shall not be diluted, or watered down.
   b. Paint shall be applied in 10-12 wet mil thickness (4-6 mil dried). Each coat thickness shall be verified by the project inspector.
2. International Accessible Symbol: Symbol shall be white figures on a blue background. Blue shall be equal to PMS 293C. Lines and symbols shall be accurately formed and true to line and form; lines shall be straight and uniform in width. Painted edges shall be clean cut and free from raggedness, and corners shall be cut sharp and square. Tolerances: Apply striping within a tolerance 1/2 inch in 50 feet. Apply markings and striping to widths indicated with a tolerance of 1/4 inch on straight sections and 1/2 inch on curved sections.

E. Colors: As directed by Architect

F. Precast Concrete Bumpers: Install in location where shown, using steel rebar dowels, and epoxy.

3.04 DEFECTIVE ASPHALT;
Defective asphalt is as described below.

A. Exposed rock pockets on the finished surface that lack the # 8- #200 fines that is required per the sieve analysis.

B. Asphalt not placed to the design grades.

C. Asphalt that ponds water.

D. Asphalt that was compacted below the minimum required temperature and is cracked.

E. Asphalt that fails to meet the minimum compaction requirements.

F. Asphalt that lacks the minimum thickness required per plan.

G. New asphalt contaminated by a petroleum product, or spilled paint.

H. Asphalt that has depressions, cracks, scored divits from dumpster wheels, heavy equipment use, heavy construction products,

I. Asphalt placed on pumping, unstable sub-grades.

3.05 CLEANING

A. Refer to Section 01 74 00.

B. Upon completion of work of this Section promptly remove from the working area all scraps, debris and surplus material of this Section.

C. Clean excess material from surface of all concrete walks and utility structures.

END OF SECTION

SECTION 32 16 00

SITE CONCRETE

PART 1 - GENERAL

1.01 SUMMARY

A. SECTION INCLUDES:

1. The Section describes the requirements for providing portland cement concrete paving, including accessibility ramps, sidewalks, accessible routes of travel, vehicular travel, drain structures, sewer structures, thrust blocks and for other non-structural or non-vehicular applications.

B. RELATED SECTIONS

1. The General Conditions, Supplementary Conditions and Division 1 are fully applicable to this Section, as if repeated herein.

2. Section 310000, Earthwork.

1.02 REFERENCES AND STANDARDS

A. California Building Code, latest edition.

B. ACI Standards, ACI 211.1, ACI 318-14, ACI 302, IR-04, ACI 301-16, ACI 305R-10, ACI 306R-16, ACI 308-16.

C. ASTM C-94, Specification for Ready-Mixed Concrete.

D. Concrete Reinforcing Steel Institute (CRSI) Manual of Standard Practice (latest edition).

E. ASTM – American Society for Testing and Materials.

1.03 SUBMITTALS

A. Refer to Section 01 33 00.

B. Manufacturer's Data: Submit list and complete descriptive data of all products proposed for use. Include manufacturer's specifications, published warranty or guarantee, installation instructions, and maintenance instructions.

C. Materials list: Submit to the Architect a complete list of all materials proposed to be used in this portion of the work. Submitted items should include but are not limited to sand, gravel, admixtures, surface treatments, coloring agents, sealers, fibers, cast-in-place accessories, forming and curing products and concrete mix designs.

D. With concrete submittal, provide documented history of mix design performance.

1.04 QUALITY ASSURANCE

A. Use only new materials and products.

B. Use materials and products of one manufacturer whenever possible.

C. All materials, components, assemblies, workmanship and installation are to be observed by the Owner's Inspector of Record. Work not so inspected is subject to uncovering and replacement.

D. Sieve analysis from testing laboratories identifying rock/sand percentages within the concrete mix; or class 2 aggregate base shall have the current project name and project location identified on the report. Outdated analytical reports greater than 90 days old will not be accepted

1.05 DELIVERY, STORAGE AND HANDLING

A. Deliver undamaged products to job in manufacturer's sealed containers and/or original bundles with tags and labels intact.

B. Store materials in protected, dry conditions off of ground and in areas so as to not interfere with the progress of the work.

C. Transport, store and handle in strict accord with the manufacturer's written recommendations.

D. Make delivery to job when notified by Contractor verifying that the job is ready to receive the work of this Section and that arrangements have been made to properly store, handle and protect such materials and work.

E. Store cement in weather tight building, permitting easy inspection and identification. Protect from dampness. Lumpy or stale cement will be rejected.

F. Aggregates: Prevent excessive segregation, or contamination with other materials or other sizes of aggregate. Use only one supply source for each aggregate stock pile.

1.06 WARRANTY

A. Refer to General Conditions and Section 01 78 36.

1.07 TESTING

A. General: Refer to Section 01 40 00 – Quality Requirements.

B. Cement and Reinforcing shall be tested in accordance with CBC Section 1910A. Testing of reinforcing may be waived in accordance with Section 1910A.2 when approved by the Structural Engineer and DSA.

1.08 ADEQUACY AND INSPECTION

A. Design, erect, support, brace and maintain formwork and shoring to safely support all vertical and lateral loads that might be applied until such loads can be carried by concrete.

B. Notify Inspector, Architect and DSA at least 48 hours prior to placing of concrete.

1.09 PROTECTION

A. Finish surfaces shall be protected at all times from concrete pour. Inspect forming against such work and establish tight leak-proof seal before concrete is poured. Finish work damaged, defaced or vandalized during the course of construction shall be replaced by contractor at contractor expense.

1.10 FIELD MEASUREMENTS

A. Make and be responsible for all field dimensions necessary for proper fitting, slopes and completion of work. Report discrepancies to Architect before proceeding.

PART 2 - PRODUCTS

2.01 MATERIALS

A. Cement: Portland cement, ASTM C150, Type II, per ACI 318-14 Section 26.4.

B. Concrete Aggregates: Normal weight aggregates shall conform to ASTM C33, except as modified by this section. Combined grading shall meet limits of ASTM C33. Lightweight aggregate shall conform to ASTM C330, suitably processed, washed and screened, and shall consist of durable particles without adherent coatings.

C. Water: Clean and free from deleterious amounts of acids, alkalis, scale, or organic materials and per ACI 318-14 Section 26.4.1.3.1.

D. Fly Ash: Western Fly Ash, conforming to ASTM C618 for Class N or Class F materials (Class C is not permitted). Not more than 15% (by mass) may be substituted for portland cement.

E. Water Reducing Admixture: Admixture to improve placing, reduce water cement ratio, and ultimate shrinkage may be used. Provide WRDA 64 by Grace Construction Products or approved equal. Admixture shall conform to ASTM C494 and ACI 318-14 Section 26.4.1.4.19(a). Such admixture must receive prior approval by the Architect, Structural Engineer, and the Testing Lab, and shall be included in original design mix.

F. Air-entraining Admixture: Daravair 1000 by Grace Construction Products or approved equal. Admixture must conform to ASTM C260 and ACI 318-14, section 26.4.1.4.

G. Surface Retarder (for exposed aggregate finishes): Rugasol-S by Sika Corporation or approved equal.

H. Form Coating: Material which will leave no residue on concrete surface that will interfere with surface coating, as approved by the Architect.

I. Reinforcement Bars: New billet steel deformed bars conforming to requirements of ASTM A615 or ASTM A706; Grade 60. Dowels for installation through expansion joints or construction joints to existing sidewalks or concrete features shall be smooth or shall be sleeved on one end for slippage.

J. Reinforcing supports: Galvanized metal chairs or spacers or metal hangers, accurately placed 3'-0" O.C.E.W. Staggered and each support securely fastened to steel reinforcement in place. Bottom bars in footings may be supported with 3" concrete blocks with embedded wire ties. Concrete supports without wire ties will not be allowed.

K. Truncated Domes: Vitrified Polymer Composite (VPC), Cast-In-Place Detectable/Tactile Warning Surface Tiles; "Armor-Tile", "Access Tile Tactile Systems", or approved equal. Tiles shall comply with Americans with Disabilities Act and the California Code of Regulations (CCR) Title 24, Part 2, Chapter 11B (dome spacing shall be 2.35"). Install tiles as recommended by manufacturer. Color, federal yellow (FS 33538).

L. Curing Compound (for exterior slabs only): Burke Aqua Resin Cure by Burke by Edoco, 1100 Clear by W.R. Meadows or accepted equal. Water based membrane-forming concrete curing compound meeting ASTM C 309 and C1315.

M. Concrete Bonding Agent: Weld-Crete by Larson Products Corp., Daraweld C by Grace Construction Products or accepted equal.

N. Patching Mortar: Meadow-Crete GPS, one-component, trowel applied, polymer enhanced, shrinkage-compensated, fiber reinforced, cementitious repair mortar for horizontal, vertical and overhead applications as manufactured by W.R. Meadows or accepted equal.

O. Non-shrink Grout: Masterflow 713 Plus by Master Builders or approved equal. Premixed,non-metallic, no chlorides, non-staining and non-shrinking per CRD-C621, Corps of Engineers Specification and ASTM C 1107, Grades B and C.

P. Aggregate Base: Class 2 AB per Caltrans specification section 26-1.02A.

Q. Expansion Joint Material: Preformed 3/8" fiber material, full depth of concrete section, with bituminous binder manufactured for use as concrete expansion joint material, as accepted by the Architect.

R. Joint sealant for expansion joints: Single component silicone sealant, Type S, ASTM D5893.

1. Reference Standard: ASTM C920, Grade P, Class 25, Use T.
2. Dow Corning 890-SL (self-leveling) Silicone, or accepted equal.
3. Dow Corning 888-NS (non-sagging) Silicone, at slopes exceeding 5%. May not be used at asphalt surfaces.
4. Color: Custom color as selected by Architect.

S. Pre- Formed plastic Expansion Joint; W.R. Meadows 3/8" "Snap Cap", Tex-Trude expansion joint cap, or an approved equal.

T. Adhesive Anchoring (Epoxy): Hilty HIT-HY 200 Safe Set, or approved equal.

2.02 CONCRETE DESIGN AND CLASS

A. Class “B”: Concrete shall have 1" max. size aggregate, shall have 3000 psi min. at 28 day strength with a maximum water to cementitious ratio no greater than 0.50. Use for exterior slabs, including walks, vehicular paved surfaces, manhole bases, poured-in-place drop inlets, curbs, valley gutters, curb & gutter and other concrete of like nature.

B. Slump Limits: Provide concrete, at point of final discharge, of proper consistency determined by Test Method ASTM C143 with a slumps of 4" plus or minus 1".

C. Mix Design: All concrete used in this work will be designed for strength in accordance with provisions of ASI 318-14 Section 26.4. Should the Contractor desire to pump concrete, a modified mix design will need to be submitted for review. Fly ash may be used in concrete to improve workability in amounts up to 15% of the total cementitious weight.

D. Air Entrainment; Per the Local Jurisdiction minimum requirements, or 3% minimum.

2.03 MIXING OF CONCRETE

A. Conform to requirements of CBC, Chapter 19A.

B. All concrete shall be mixed until there is uniform distribution of material and mass is uniform and homogenous; mixer must be discharged completely before the mixer is recharged.

C. Concrete shall be Ready-mixed Concrete: Mix and deliver in accordance with the requirements set forth in ASTM C94 and ACI 301. Batch Plant inspection may be waived in accordance with CBC Section 1705A.3.3.1, when approved by Structural Engineer and DSA.

1. Approved Testing Laboratory shall check the first batching at the start of the work and furnish mix proportions to the Licensed Weighmaster.
2. Licensed Weighmaster to positively identify materials as to quantity and to certify to each load by ticket.
3. Ticket shall be transmitted to Project Inspector by truck driver with load identified thereon. Project Inspector will not accept load without load ticket identifying mix and will keep daily record of pours, identifying each truck, its load and time of receipt and will transmit two copies of record to DSA.
4. At end of project, Weighmaster shall furnish affidavit to DSA on form satisfactory to DSA, certifying that all concrete furnished conforms in every particular and to proportions established by mix designs.
5. Placement of concrete shall occur as rapidly as possible after batching and in a manner which will assure that the required quality of the concrete is maintained. In no case may concrete be placed more than 90 minutes from batch time.
6. Water may be added to the mix only if neither the maximum permissible water-cement ratio nor the maximum slump is exceeded. In no case shall more than 10 gallons of water shall be added to a full 9 yard load, or 1 gal. per yard on remaining concrete within the drum providing load tag indicates at time of mixing at plant will allow for additional water.

2.04 MATERIALS TESTING

A. Materials testing of concrete and continuous batch plant inspection may be waived in accordance CBC Sections 1704A.4.4 when approved by Structural Engineer and DSA.

B. Testing of concrete shall be performed per article 3.12 of this specification.

2.05 EQUIPMENT

A. Handling and mixing of concrete: Project Inspector may order removal of any equipment which in his opinion is insufficient or in any way unsuitable.

PART 3 - EXECUTION

3.01 APPROVAL OF FORMS AND REINFORCEMENTS

A. Forms and reinforcements are subject to approval by the Project Inspector, and notice of readiness to place first pour shall be given to DSA, Architect and Structural Engineer 48 hours prior to placement of concrete. Before placing concrete, clean tools, equipment and remove all debris from areas to receive concrete. Clean all reinforcing and other embedded items off all coatings oil, and mud that may impair bond with concrete.

B. All reinforcing steel shall be adequately supported by approved devices on centers close enough to prevent any sagging.

C. All reinforcing bar lap splices shall be staggered a minimum of 5 ft.

D. Additional reinforcing steel shall be placed around all utility boxes, valve boxes, manhole frames and covers that are located within the concrete placements.

1. The bars shall be placed so that there will be a minimum of 1 ½” clearance and a maximum of 3” clearance. The reinforcing steel shall be placed mid-depth of concrete slab.

E. At all right angles or intersections of concrete walks, additional 2’x2’ #5, 90 degree bars shall be added at all inside corners for additional crack control. The bars shall be placed 2” from concrete forms and supports at mid-depth of slab.

3.02 PROTECTION

A. Protect work and materials of this Section prior to and during installation, and protect the installed work and materials of other trades.

B. In the event of damage, make all repairs and replacements necessary to the approval of the Architect at no additional cost to the Owner.

C. Sub-Grade in vehicular concrete paved areas: Subgrade shall be clean, shaped and compact to hard surface free from elevations or depressions exceeding 0.05’ in 10' from true plan. Compact per Section 31 00 00. Compaction and moisture content shall be verified immediately prior to placement of concrete. Proof roll subbase in presence of geotechnical engineer prior to placement of aggregate base.

3.03 CLEANING

A. Reinforcement and all other embedded items at time of placing concrete to be free of rust, dirt oil or any other coatings that would impair bond to concrete.

B. Remove all wood chips, sawdust, dirt, loose concrete and other debris just before concrete is to be poured. Use compressed air for inaccessible areas. Remove all standing water from excavations.

3.04 FORMING

A. Form material shall be straight, true, sound and able to withstand deformation due to loading and effects of moist curing. Materials which have warped or delaminated, or require more than minor patching of contact surfaces, shall not be reused.

B. Build forms to shapes, lines, grades and dimensions indicated. Construct form work to maintain tolerances required by ACI 301. Forms shall be substantial, tight to prevent leakage of concrete, and properly braced and tied together to maintain position and shape. Butt joints tightly and locate on solid backing. Chamfer corners where indicated. Form bevels, grooves and recesses to neat, straight lines. Construct forms for easy removal without hammering, wedging or prying against concrete.

C. Space clamps, ties, hangers and other form accessories so that working capacities are not exceeded by loads imposed from concrete or concreting operations.

D. Build openings into vertical forms at regular intervals if necessary to facilitate concrete placement, and at bottoms of forms to permit cleaning and inspection.

E. Build in securely braced temporary bulkheads, keyed as required, at planned locations of construction joints.

F. Slope tie-wires downward to outside of wall.

G. Brace, anchor and support all cast-in items to prevent displacement or distortion.

H. During and immediately after concrete placing, tighten forms, posts and shores. Readjust to maintain grades, levels and camber.

I. Concrete paving, Curbs, Curb and Gutters, Ramps:

1. Expansion Joints: Install at locations indicated, and so that maximum distance between joints is 20’ for exterior concrete unless otherwise shown. Expansion joint material shall be full depth of concrete section. Recess for backer rod and sealant where required. Expansion joints shall not exceed ¼ inch depth measured from finish surface to top of felt or sealant, and ½ inch width.
2. Curbs, Valley Gutter, and Curb & Gutter: Install expansion joints at 60’ on center, except when placing adjacent to concrete walks, the expansion joints shall align with the expansion joints shown for the concrete walks. Expansion joint material shall be full depth of concrete section. Recess for backer rod and sealant will be required.
3. Isolation Joints: 3/8” felt between walls and exterior slabs or walks so that paved areas are isolated from all vertical features, unless specifically noted otherwise on plans.

4. Exterior Concrete Paving: Install expansion joints at 20’ on center maximum, both directions, unless shown otherwise on plans.
5. Ramps; whether shown or not all ramps shall have control joints and expansion joints.

a. Control joints on ramps shall be aligned and be placed in between with the vertical posts for the handrails. The curbs, if required shall have control joints that align with the handrail posts.
b. Expansion joints shall be placed at the upper, intermediate, and bottom landings.

3.05 FORM COATING

A. Before placement of reinforcing steel, coat faces of all forms to prevent absorption of moisture from concrete and to facilitate removal of forms. Apply specified material in conformance with manufacturer's written directions.

B. Before re-using form material, inspect, clean thoroughly and recoat.

C. Seal all cut edges.

3.06 INSTALLATION

A. General: Reinforcement shall be accurately placed at locations indicated on the drawings within required tolerances and providing required clearances. Reinforcement shall be secured prior to placement of concrete such that tolerances and clearances are maintained. Coverage shall be in accordance with Section 1907A.7 of the CBC. Keep a person on the job to maintain position of reinforcing as concrete is placed. Reinforcement must be in place before concreting is begun. Install dowels as shown on drawings. Give notice whenever pipes, conduits, sleeves, and other construction interferes with placement; obtain method of procedure to resolve interferences. All expansion and construction joints in concrete shall have dowels of size and spacing as shown, or as approved by Architect.

B. Placing Tolerances:

1. Per ACI 301 or CRSI/WCRSI Recommended Practice for Placing Reinforcing Bars, unless otherwise shown.
2. Clear distance between parallel bars in a layer shall be no less than 1”, the maximum bar diameter not 1 ½ times the maximum size of coarse aggregate.

C. Splices:

1. General: Unless otherwise shown on drawings, splice top reinforcing at midspan between supports, splice bottom reinforcing at supports and stagger splices at adjacent splices 5 foot minimum. Bar laps shall be wired together. Reinforcing steel laps shall be as follows:
   a. Lap splices in concrete: Lap splice lengths shall not be less than 62 bar diameter for No. 5 bar, 56” minimum for No. 6 bars. No. 4 bar shall have a minimum of 24” splice. 93 bar diameters for No. 7 bars and larger.
   b. All splices shall be staggered at 5 feet minimum.

3.07 INSPECTION

A. Approval of reinforcing steel, after installation, must be received from Inspector. Architect, Structural Engineer and DSA must be notified 48 hrs. in advance of beginning of concrete placement operations.

B. Slope of concrete forms and finish condition shall be checked with a two foot (2') digital level.

3.08 PLACING OF CONCRETE

A. Adjacent finish surfaces shall be protected at all times during the concrete pour and finishing. Verify that all formwork is tight and leak-proof before concrete is poured. Finish work defaced during the concrete pour and finishing shall be replaced at no extra cost to the owner.

B. Transport concrete from mixer to place of final deposit as rapidly as practicable by methods which will prevent separation or loss of ingredients. Deposit as close as practicable in final position to avoid re-handling or flowing. Partially hardened concrete must not be deposited in work. Concrete shall not be wheeled directly on top of reinforcing steel.

C. Placing: Once started, continue concrete pour continuously until section is complete between predetermined construction joints. Prevent splashing of concrete onto adjacent forms or reinforcement and remove such accumulation of hardened or partially hardened concrete from forms or reinforcement before work proceeds in that area. Free fall of concrete shall not to exceed 4'-0" in height. If necessary, provide lower openings in forms to inject concrete and to reduce fall height.

D. Remove form spreaders as placing of concrete progresses.

E. Place footings as monolithic and in one continuous pour.

F. Keep excavations free of standing water, but moisture condition sub-grade before concrete placement.

G. Compacting: All concrete shall be compacted by mechanical vibrators. Concrete shall be thoroughly worked around reinforcement and embedded fixtures and into corners of forms. Vibrating shall not be applied to concrete which has already begun to initially set nor shall it be continued so long as to cause segregation of materials.

H. Concrete Flatwork:

1. All flatwork shall be formed and finished to required line and grades. Flatwork shall be true and flat with a maximum tolerance of 1/8" in 10' for flatness. Flatwork which is not flat and are outside of the maximum specified tolerances shall be made level by the Contractor at no additional expense to
2. Thoroughly water and soak the flatwork subgrade as required to achieve required moisture content prior to the concrete pour. Provide damming as required to keep water within the formed area and to allow for proper saturation of the subgrade.
3. Concrete vibrator shall be used to assist concrete placement. Contractor shall have spare concrete vibrator on site during concrete placement.

I. Placing in hot weather: Comply with ACI 305R-10. Concrete shall not exceed 85 degrees F at time of placement. Concrete shall be delivered, placed and finished in a sufficiently short period of time to avoid surface dry checking. Concrete shall be kept wet continuously after tempering until

implementation of curing compound procedure in accordance with this specification.

J. Placing in cold weather: Comply with ACI 306R-16. Protect from frost or freezing. No antifreeze admixtures are permitted. When deposited concrete during freezing or near-freezing weather, mix shall have temperature of at least 50 degrees F but not more than 90 degrees F. Concrete shall be maintained at temperature of at least 50 degrees F for not less than 72 hours after placing or until it has thoroughly hardened. Provide necessary thermal coverings for any flat work exposed to freezing temperatures.

K. Horizontal construction joint: Keep exposed concrete face of construction joints continuously moist from time of initial set until placing of concrete; thoroughly clean contact surface by chipping entire surface not earlier than 5 days after initial pour to expose clean hard aggregate solidly embedded, or by approved method that will assure equal bond, such as green cutting. If contact surface becomes contaminated with soil, sawdust or other foreign matter, clean entire surface and re-chip entire surface to assure proper adhesion.

3.09 CONCRETE FINISHES

A. Concrete Slab Finishing: Finish slab as required by ACI 302.1R. Use manual screeds, vibrating screeds to place concrete level and smooth. Use “jitterbugs” or other special tools designed for the purpose of forcing the course aggregate below the surface leaving a thick layer of mortar 1 inch in thickness. Surface shall be free from trowel marks, depressions, ridges or other blemishes. Tolerance for flatness shall be 1/8" in 10'. Provide final finish as follows:

1. Flatwork, medium broom finish: Typical finish to be used at all exterior walks and stairs.
2. Ramps, heavy broom finish: Concrete surfaces with slope greater than 5% including all ramps. Brooming direction shall run perpendicular to slope to form non-slip surface
3. Under no circumstances can water be added to the top surface of freshly placed concrete.

B. Curb Finishing: Steel trowel.

C. Joints and Edges: Mark-off exposed joints, where indicated, with ¼” radius x 1” deep jointer or edging tool. Joints to be clean, cut straight, parallel or square with respect to concrete walk edge. Tool all edges of exposed expansion and contraction joints, walk edges, and wherever concrete walk adjoins other material or vertical surfaces.

1. The expansion joints shall be full depth as shown in the plan details. Failure to do so will result in non-compliance and shall be immediately machine cut by the contractor at his expense.

D. Exposed Concrete Surface Finishing (not including top surface of flatwork): Remove fins and rough spots immediately following removal of forms from concrete which is to be left exposed. Damaged and irregular surfaces and holes left by form clamps and sleeves shall be patched with grout. Tie wires are to be removed to below exposed surface and holes pointed up with neat cement paste similar to procedure noted under "Patching" below. Removal of tie wires shall extend to distance of 2" below established grade lines. Ends of tie wires shall be cut off flush at all other, unexposed locations. Care shall be taken to match adjacent finishes of exposed concrete surface. After patching, all concrete that is to remain exposed, shall be sacked with a grout mixture of 1-part cement, 1 1/2- parts fine sand and sufficient water to produce a consistency of thick paint. After first wetting the concrete surface, apply

mixture with a brush and immediately float entire surface vigorously using a wood float. Keep damp during periods of hot weather. When set, excess grout shall be scraped from wall with edge of steel trowel, allowed to set for a time, then wiped or rubbed with dry burlap. Entire finishing operation of any area shall be completed on the same day. This treatment shall be carried to 4" below grade, and all patching and sacking shall be done immediately upon removal of the forms.

E. Stair Treads and Risers: Tool exterior stair tread nosing per ADA requirements and as detailed. Paint or stain tooled area at every stair tread nosing or as detailed. Stair tread nosing shall contain no pockets, voids or spalls. Patching is not allowed. Damaged nosing shall be replaced.

3.10 CURING

A. Cured Concrete in Forms: Keep forms and top on concrete between forms continuously wet until removal of forms, 7 days minimum. Maintain exposed concrete in a continuous wet condition for 14 days following removal of forms.

B. Flatwork/Variable Height Curbs, Curb and gutter, Valley Gutter: Cure utilizing Curing Compound. If applicable, the Contractor shall verify that the approved Curing Compound is compatible with the approved colorant system. Upon completion of job, wash clean per manufacturer's recommendations.

1. Curing compound shall be applied in a wet puddling application. Spotty applications shall be reason for rejection and possibly concrete removal and replacement at the contractor's expense with no compensation from the owner.

C. No Curing Compound shall be applied to areas scheduled to receive resilient track surface including, curbs, ramps, run ways, etc.

3.11 DEFECTIVE CONCRETE

A. Determination of defective concrete shall be made by the Architect or Engineer. His opinion shall be final in identifying areas to be replaced, repaired or patched.

B. The Owner reserves the right to survey the flatwork, if it is determined to be outside of the maximum tolerance for flatness. If the flatwork is found to be out of tolerance, then the Contractor will be required to replace concrete. The Contractor will be responsible for reimbursing the Owner for any surveying costs incurred. Determination of flatwork flatness, surveying and any remedial work must be completed far enough in advance so that the project schedule is maintained, delays are avoided and the new flatwork or flatwork repairs are properly cured.

C. As directed by Architect, cut out and replace defective concrete. All defective concrete shall be removed from the site. No patching is to be done until surfaces have been examined by Architect and permission to begin patching has been provided.

D. Permission to patch any area shall not be considered waiver of right, by the Owner, to require removal of defective work, if patching does not, in opinion of Architect, satisfactorily restore quality and appearance of surface.

E. Defective concrete is:

1. Concrete that does not match the approved mix design for the given installation type.
2. Concrete not meeting specified 28-day strength.
3. Concrete which contains rock pockets, voids, spalls, transverse cracks, exposed reinforcing, or other such defects which adversely affect strength, durability or appearance.
4. Concrete which is incorrectly formed, out of alignment or not plumb or level.
5. Concrete containing embedded wood or debris.
6. Concrete having large or excessive patched voids which were not completed under Architect's direction.
7. Concrete not containing required embedded items.
8. Excessive Shrinkage, Traverse cracking, Crazing, Curling; or Defective Finish. Remove and replace if repair to an acceptable condition is not feasible.
9. Concrete that is unsuitable for placement or has set in truck drum for longer than 90 minutes from the time it was batched.
10. Expansion joint felt that is not isolating the full depth of the concrete section, and recessed as required for backer rod and sealant where required.
11. Concrete that is excessively wet or excessively dry and will not meet the minimum or maximum slump required per mix design.
12. Finished concrete with oil stains from equipment use, and or rust spots that cannot be removed.
13. Control joints (weakened planed joints) that do not meet the required minimum depth shown on the drawings.

F. Patching: Install specified Patching Mortar per manufacturer’s recommendations. REPAIRS TO DEFECTIVE CONCRETE WHICH AFFECT THE STRENGTH OF ANY STRUCTURAL CONCRETE MEMBER OR COMPONENT ARE SUBJECT TO APPROVAL BY THE ARCHITECT AND DSA.

3.12 CONCRETE TESTING

A. Comply with CBC Section 1903A, 1905A.1.16, 1910A and 1705A.3 and as specified in B. below. Costs of tests will be borne by the Owner.

B. Four identical cylinder samples for strength tests of each class of concrete placed each day shall be taken not less than once a day, or not less than once for each 50 cubic yards of concrete, or not less than once for each 2,000 square feet of surface area for slabs or walls. In addition, samples for strength tests for each class of concrete shall be taken for seven-day tests at the beginning of the concrete work or whenever the mix or aggregate is changed.

C. Strength tests will be conducted by the Testing Lab on one cylinder at seven (7) days and two cylinders at twenty-eight (28) days. The fourth remaining cylinder will be available for testing at fifty-six (56) days if the 28-day cylinder test results do not meet the required design strength.

D. On a given project, if the total volume of concrete is such that the frequency of testing required by paragraph B. above would provide less than five strength tests for a given class of concrete, tests shall be made from at least five randomly selected batches or from each batch if fewer than five batches are used.

E. Cost of retests and coring due to low strength or defective concrete will be paid by Owner and back-

charged to the Contractor.

F. Each truck shall be tested for slump before concrete is placed.

3.13 REMOVAL OF FORMS

A. Remove without damage to concrete surfaces.

B. Sequence and timing of form removal shall insure complete safety of concrete structure.

C. Forms shall remain in place for not less than the following periods of time. These periods represent cumulative number of days during which temperature of air in contact with concrete is 60 degrees F and above.

1. Vertical forms of foundations, walls and all other forms not covered below: 5 days.
2. Slab edge screeds or forms: 7 days.
3. Concrete columns and beam soffits: 28 days.

D. Concrete shall not be subjected to superimposed loads (structure or construction equipment) until it has attained its full design strength and not for a period of at least 21 days after placing. Concrete systems shall not be subjected to construction loads in excess of design loads.

3.14 CLEANING

A. Refer to Section 01 74 00.

B. Upon completion of work of this Section promptly remove from the working area all scraps, debris and surplus material of this Section.

C. Clean excess material from surface of all concrete walks and utility structures.

D. Power wash all concrete surfaces to remove stains, dried mud, tire marks, and rust spots.

END OF SECTION

SECTION 32 31 00

DECORATIVE METAL ANTI-CLIMB FENCING AND GATES

PART 1 - GENERAL

1.01 SECTION INCLUDES

A. Anti-climb welded wire decorative metal fence system.

B. Swing gates.

1.02 RELATED SECTIONS

A. Section 03 30 53 – Miscellaneous Cast-In-Place Concrete.

B. Section 08 71 00 – Gate Hardware.

1.03 REFERENCES

A. The publications listed below form a part of this Section to the extent referenced. The publications are referred to in the text by the basic designation only. Refer to Division 01 for definitions, acronyms, and abbreviations.

B. Standards, manuals, and codes refer to the latest edition of such standards, manuals, and codes in effect as of the date of issue of this Project Manual, unless indicated otherwise in CBC Chapter 35 and CFC Chapter 80.

C. Referenced Standards and Manuals:

1. ASTM A641 – Standard Specification for Zinc–Coated (Galvanized) Carbon Steel Wire.
2. ASTM A653/A653M – Standard Specification for Steel Sheet, Zinc-Coated (Galvanized) or Zinc-Iron Alloy Coated (Galvannealed) by the Hot-Dip Process.
3. ASTM B117 – Practice for Operating Salt-Spray (Fog) Apparatus.
4. ASTM B221 – Standard Specification for Aluminum and Aluminum-Alloy Extruded Bars, Rods, Wire, Profiles, and Tubes.
5. ASTM D714 – Test Method for Evaluating Degree of Blistering in Paint.
6. ASTM D1654 – Test Method for Evaluation of Painted or Coated Specimens Subjected to Corrosive Environments.
7. ASTM D2794 – Test Method for Resistance of Organic Coatings to the Effects of Rapid Deformation (Impact).
8. ASTM D3359 – Test Method for Measuring Adhesion by Tape Test.
9. ASTM F2453/F2453M – Standard Specification for Welded Wire Mesh Fence Fabric.

1.04 SUBMITTALS

A. Submit under provisions of Division 01.

B. Shop Drawings: Layout of fences and gates with dimensions, details, and finishes of components, accessories, and post foundations.

C. Product Data: Manufacturer's catalog cuts indicating material compliance and specified options.

1.05 SYSTEM DESCRIPTION

A. Commercial welded wire architectural fence system including all components (i.e., panels, brackets, posts, gates, and hardware) required.

1.06 QUALITY ASSURANCE

A. Provide laborers and supervisors who are thoroughly familiar with the type of construction involved and materials and techniques specified.

B. Qualifications:

1. Manufacturer Qualifications:

a. Firm specializing in manufacturing products specified in this Section with a minimum ten years' experience.

2. Installer Qualifications:

a. Firm specializing in installing work specified in this Section, acceptable to manufacturer with experience on at least five projects of similar nature in past three years.
b. Installer shall have completed manufacturer's online training or field training program.

1.07 PRODUCT HANDLING AND STORAGE

A. Upon receipt at the job site, all materials shall be checked to ensure that no damages occurred during shipping or handling. Materials shall be stored in such a manner to ensure proper ventilation and drainage, and to protect against damage, weather, vandalism, and theft.

1.08 WARRANTY

A. All structural fence components shall be warranted within specified limitations, by the manufacturer for a period of 10 years from date of original purchase. Warranty shall cover any defects in material finish, including cracking, peeling, chipping, blistering, or corroding, and against defects in workmanship or materials.

PART 2 - MATERIALS

2.01 MANUFACTURER

A. Acceptable Manufacturers:

1. Basis-of-Design: Ameristar. Product: Ameristar Matrix Fence System with WireWorks Anti-Climb fence fabric.

B. Substitutions: Under provisions of Division 01.

2.02 MATERIALS

A. Steel material for fence posts and rails shall be galvanized prior to forming in accordance with the requirements of ASTM A653/A653M, with minimum yield strength of 45,000 psi (310 MPa). The steel shall be hot-dip galvanized to meet the requirements of ASTM A653/A653M with a minimum zinc coating weight of 0.90 ounces per square foot, Coating Designation G-90. Fence posts and gate posts shall meet the minimum size requirements of Table 1.

B. Posts shall conform to the manufacturer's Matrix Level 2 I-beam post design, size: 4 inch x 2.75 inch x 11 gauge nominal. Post length shall be as required for footing depth required to withstand design loads at project location, with exposed height as indicated on Drawings.

C. The cross-sectional shape of the rails shall conform to the manufacturer's Matrix C-shaped rail design, a nominal 2 inch x 2 inch x 11 gauge. Rail shall be pre-drilled to accept fasteners for attachment of mesh retainer channel.

D. Steel wire mesh fence panels shall be manufactured to meet ASTM F2453. Fence panels shall be pre-galvanized steel wire, welded at each crossing to form rectangles. Panels shall be 8 gauge horizontal wires spaced at 3 inches; vertical 8 gauge wires shall be spaced at 0.5 inches. The cold rolled wire shall have a tensile strength of 74,000 psi minimum, and 68,000 psi shear strength minimum. Wire strand shall be galvanized before welded (GBW), 0.50 ounces per square foot zinc coating conforming to ASTM A641.

E. The cross-sectional shape of the mesh retainer channels shall conform to the manufacturer’s channel design with outside cross-section nominal dimensions of 3.5 inches x 0.75 inches. Aluminum material for channel and cap shall conform to the requirements of ASTM B221, alloy designation 6005-T5 and 6063-T5.

2.03 FABRICATION

A. Rails and Posts:

1. Rails and I-beam posts shall be pre-cut to specified lengths.
2. Rails shall be pre-punched to accept security fasteners.
3. Post flange shall be pre-punched to accept rail to I-beam post attachment.
4. Post web shall be punched providing a clear opening for interior of rails to align throughout the entire system.
5. Rails shall be attached to post flange providing a bracket-less design at each intermediate post.

B. Mesh Retainer Channels:

1. Mesh retainer channels shall be precut to specified lengths.
2. Mesh retainer channels shall be affixed horizontally to rails to accommodate the insertion of specified fence fabric.
3. Locking cover shall conceal and secure mesh retainer channel fasteners.

C. Fence Fabric Panels:

1. Fence fabric panels shall be inserted into the mesh retainer channels to conceal and secure fence fabric material to the framework.
2. Fence Fabric material shall be affixed to I-beams using appropriate attachment brackets and fasteners.

D. Gates:

1. Gate Posts: Gate posts shall be 8 inches x 8 inches by 1/4 inch thick in cross-section. Post length shall be as required to match exposed height of fence with 61 inch minimum footing depth unless otherwise indicated on Drawings. Gate posts shall have manufacturer's standard 8 inch prestressed steel cap. Gate posts shall be bolted to adjacent fencing and gate panels using manufacturer's standard brackets and fasteners.
2. Gate Frame Tube Members: Frame tube members shall be 3 inch x 3 inch x 12 gauge galvanized steel. Frame tube members shall be fully welded.
3. Gate panel fabric shall match adjacent fence fabric and shall be attached to gate panels by welding.
4. Each gate leaf shall be composed of two frame Sections bolted together using 1/2 inch diameter stainless steel hardware every 18 inches.
5. Gate Hardware:

   a. Hinges: Provide manufacturer's model number EGXHINGE heavy-duty hinges. Provide 3 hinges per gate leaf, with hinge swing at each leaf as required for operation indicated on Drawings.
   b. Provide one drop arm model number EGXDROPARM with bracket and fasteners at each gate leaf.
   c. Latching: Each pair of gates shall have a 4-point latching system with latches spaced as indicated on Drawings and operated from a single latch lever.
   d. Locking: Each pair of gates shall accommodate a padlock at the latch lever assembly. Refer to Section 08 71 00 – Gate Hardware for padlock.

E. Finish: The manufactured fence system (i.e., panels, brackets, posts, gates, and hardware) shall be subjected to the PermaCoat thermal stratification coating process (high-temperature, in-line, multi-stage, multi-layer) including, as a minimum, a six-stage pretreatment/wash (with zinc phosphate), an electrostatic spray application of an epoxy base, and a separate electrostatic spray application of a polyester finish. The base coat shall be a thermosetting epoxy powder coating (gray in color) with a minimum thickness of 2 mils. The topcoat shall be a "no-mar" TGIC polyester powder coat finish with a minimum thickness of 2 mils. The stratification-coated framework shall be capable of meeting the performance requirements for each quality characteristic shown in Table 2.

1. Color: as indicated on Drawings.

PART 3 - EXECUTION

3.01 FENCE INSTALLATION

A. Fence posts shall be spaced according to Table 1.

B. Fence framework and fence fabric shall be attached to system posts with fasteners supplied by the manufacturer. Posts shall be installed as noted in Post Selection Table available from Manufacturer. Sections 03 30 53 – Miscellaneous Cast-In-Place Concrete and 31 00 00 – Earthwork shall govern material requirements for the concrete footings.

3.02 FENCE INSTALLATION MAINTENANCE

A. When cutting/drilling steel and aluminum system components adhere to the following steps to seal the exposed surfaces;

1. Remove all metal shavings from cut area.
2. Apply zinc-rich primer to thoroughly cover cut edge and/or drilled hole; let dry.
3. Apply two coats of custom finish paint matching fence color.
4. Failure to seal exposed surfaces per steps 1 through 3 above will negate warranty. Ameristar spray cans or paint pens shall be used to prime and finish exposed surfaces; it is recommended that paint pens be used to prevent overspray. Use of non-Ameristar parts or components will negate the manufacturers' warranty.

3.03 GATE INSTALLATION

A. Gate posts shall be spaced according to the manufacturers' gate drawings, dependent on standard out-to-out gate leaf dimensions and gate hardware selected. Gate hardware shall be provided by gate manufacturer and installed by gate installer.

3.04 CLEANING

A. Clean the jobsite of excess materials; post-hole excavations shall be scattered uniformly away from posts.

Table 1 – Fence Post Setting on Level Grade

Post Type	Level Line	Level Corner
Level Line	95.75 inch	96 inch
Level Corner	96 inch	96.25 inch

Table 2 – Coating Performance Requirements

Quality Characteristics	ASTM Test Method	Performance Requirements
Adhesion	D3359 – Method B	Adhesion (Retention of Coating) over 90 percent of test area (Tape and knife test).
Corrosion Resistance	B117, D714, and D1654	Corrosion Resistance over 3,500 hours (Scribed per D1654; failure mode is accumulation of 1/8 inch coating loss from scribe or medium #8 blisters).
Impact Resistance	D2794	Impact Resistance over 60-inch lb. (Forward impact using 0.625 inch ball).

END OF SECTION

SECTION 32 31 13

CHAIN LINK FENCES

PART 1 - GENERAL

1.01 SUMMARY

A. SECTION INCLUDES

1. Fence framework, fabric, and accessories.
2. Excavation for post bases; concrete foundation for posts.

B. RELATED SECTIONS

1. The General Conditions, Supplementary Conditions and Division 01 are fully applicable to this Section, as if repeated herein.
2. Section 02 41 00: Site Demolition.
3. Section 03 30 53: Miscellaneous Cast-In-Place Concrete.
4. Section 32 16 00: Site Concrete.

1.02 REFERENCES

A. ANSI/ASTM A123 - Zinc (Hot Dip Galvanized) Coatings on Iron and Steel Products.

B. ANSI/ASTM F567 – Installation of Chain link Fence.

C. ASTM A153 - Zinc Coating (Hot-Dip) on Iron and Steel Hardware.

D. ASTM C94 – Ready-mixed Concrete.

E. ASTM F626 – Standard Specification for Fence Fittings.

F. ASTM F668 – Standard Specification for Polyvinyl Chloride (PVC) and Other Organic Polymer-Coated Steel Chain-Link Fence Fabric.

G. ASTM F900 – Standard Specification for Industrial and Commercial Swing Gates.

H. ASTM F1043 – Standard Specification for Strength and Protective Coatings on Steel Industrial Chain Link Fence Framework.

I. ASTM F1083 – Standard Specification for Pipe, Steel, Hot-Dipped Zinc-Coated (Galvanized) Welded, for Fence Structures.

J. ASTM F1664 – Standard Specification for Poly (Vinyl Chloride) (PVC) and Other Conforming Organic Polymer-Coated Steel Tension Wire Used with Chain-Link Fence.

K. Chain link Fence Manufacturers' Institute (CLFMI) – Product Manual.

1.03 SYSTEM DESCRIPTION

A. Fence Height: As indicated on Drawings.

B. Line Post Spacing: At intervals not exceeding 10 feet.

1.04 SUBMITTALS

A. Submit shop drawings and product data under provisions of Section 01 33 00.

B. Submit samples of Vinyl Slats for color selection by Architect.

1.05 QUALITY ASSURANCE

A. Manufacturer: Company specializing in manufacturing the products specified in this section with minimum three years' experience.

B. Installer: Company specializing in installations of chain-link fencing with a minimum of five years of experience. If any welding is required provide welders' certificates, verifying AWS qualification within the previous 12 months.

1.06 FIELD MEASUREMENTS

A. Verify field measurements are as indicated on shop drawings.

1.07 WARRANTY

A. Manufacturer of slats to provide a 25 year warranty against color fading and breakage of slats.

PART 2 - PRODUCTS

2.01 MATERIALS

A. Fabric:

1. Type D - Privacy Slatted Fabric: Industrial grade. Black vinyl coated where indicated on Drawings, 3-1/2-inch x 5" diamond mesh interwoven wire with factory installed 2.310" wide PDS "IDS" slats full height or approved equal. Secure slats with monel-clinch-lock staples. 9-gauge zinc coated steel wire, top selvage knuckled tight, bottom selvage knuckled end closed. Slat color: Black. Slats to be fabricated of extruded high-density virgin polyethylene, containing color pigmentation and U.V. inhibitors.

B. Line Posts: ASTM F1083 SCH 40 galvanized, round, 2.875 inch diameter.

C. Terminal and Corner Posts: ASTM F1083 SCH 40 galvanized, round, 4.000 inch diameter.

D. Top Rail, Middle Brace Rail, and Bottom Rail: ASTM F1083 SCH 40 galvanized, round, 1.66 inch diameter, plain end, sleeve coupled at top.

E. Tie Wires: 9 gauge galvanized steel wire.

F. Concrete: ASTM C94; Portland Cement, 2,500 p.s.i. minimum strength at 28 days, 3 inch slump; one inch maximum sized coarse aggregate.

2.02 ACCESSORIES

A. Caps: Cast steel galvanized; sized to post diameter, set screw retainer.

B. Fittings: Sleeves, bands, clips, rail ends, tension bars, fasteners, and fittings; steel galvanized.

2.03 FINISHES

A. Components and Fabric: Galvanized to ANSI/ASTM A123; 1.2 oz./sq. ft.

B. Hardware: Unless specified otherwise, galvanized to ASTM A153, 1.2 oz./sq. ft. coating.

C. Accessories: Same finish as framing.

D. Provide factory applied polyvinyl chloride or polyolefin coating as follows:

1. Components:

a. Fabric: Thermally fused to zinc-coated wire conforming to ASTM F668; Class 2b.
b. Framework: Thermally fused to zinc-coated pipe conforming to ASTM F1043; ten mils thick minimum.
c. Fittings: Thermally fused to zinc-coated fittings conforming to ASTM F626; 0.006 inch thick minimum.
d. Tie Wire: Thermally fused to zinc-coated wire conforming to ASTM F626.
e. Tension Wire: Thermally fused to zinc-coated wire conforming to ASTM F1664.

2. Color: Black.

PART 3 - EXECUTION

3.01 INSTALLATION

A. Install framework, fabric, accessories, and gates in accordance with ANSI/ASTM F567-93 and manufacturer's instructions.

B. Drill caissons to diameter and depth as shown in the drawings, and or details. Clean holes and remove all loose dirt to a hard undisturbed bottom.

1. When placing fence posts in existing asphalt, the existing asphalt shall be cored drilled with a diamond core hole saw 3 inches larger than the caisson diameter. Under no circumstances shall an auger dirt bit be used to drill through the asphalt.
2. When placing fence posts where the new surrounding finish surface will be asphalt, the fence posts shall be placed first before the asphalt is laid. Top of post caisson shall be at the top of aggregate base.

C. Set intermediate and terminal posts plumb in concrete caisson. Slope top of concrete for water runoff. Use concrete vibrator in each caisson during concrete placement to settle and seat concrete.

D. Line and Terminal Post Footing Depth Below Finish Grade: Refer to Drawings.

E. Brace each corner post to adjacent line post with horizontal center brace rail and diagonal truss rods. Install brace rail, on bay from end post.

F. Provide top rail through line post tops and splice with 6 inch long rail sleeves.

G. Install center and bottom rails all around enclosure.

H. Stretch fabric between terminal posts.

I. Position bottom of fabric 1 inch above finished grade.

J. Fasten fabric to top, center, and bottom rail and line posts with tie wire at maximum 12 inches on centers.

K. Attach fabric to end and corner posts with tension bars and tension bar clips at 12 inches on center.

L. All field welding to be performed by certified welder and all welds are to be ground down smooth and treated.

M. All areas of welds are to be thoroughly cleaned, fluxed, and treated with galvanizing zinc “Hot Stick”. Do not over heat pipe when treating.

N. Touch-up areas of damaged coating with color-matching PVC liquid touch up after fence components have been installed.

3.02 ERECTION TOLERANCES

A. Maximum variation from plum: 1/8 inch.

B. Maximum offset from true position: 3/8 inch.

C. Components shall not infringe adjacent property lines.

END OF SECTION

SECTION 32 31 19

DECORATIVE METAL FENCES

PART 1 - GENERAL

1.01 SECTION INCLUDES

A. Ornamental Picket Fencing and Accessories.

1.02 RELATED SECTIONS

A. Section 03 30 53 – Miscellaneous Cast-In-Place Concrete.

B. Section 32 31 19.16 – Swinging Decorative Metal Gates.

1.03 REFERENCES

A. The publications listed below form a part of this Section to the extent referenced. The publications are referred to in the text by the basic designation only. Refer to Division 01 for definitions, acronyms, and abbreviations.

B. Standards, manuals, and codes refer to the latest edw1ition of such standards, manuals, and codes in effect as of the date of issue of this Project Manual, unless indicated otherwise in CBC Chapter 35 and CFC Chapter 80.

C. Referenced Standards:

1. ASTM A653/A653M – Standard Specification for Steel Sheet, Zinc-Coated (Galvanized) or Zinc-Iron Alloy-Coated (Galvannealed) by the Hot-Dip Process.
2. ASTM B117 – Standard Practice for Operating Salt Spray (fog) Testing Apparatus.
3. ASTM D523 – Standard Test Method for Specular Gloss.
4. ASTM D714 – Standard Test Method for Evaluating Degree of Blistering in Paint.
5. ASTM D822 – Standard Practice for Conducting Tests on Paint and Related Coatings and Materials using Filtered Open-Flame Carbon-Arc Light and Water Exposure Apparatus.
6. ASTM D1654 – Standard Test Method for Evaluation of Painted or Coated Specimens Subjected to Corrosive Environments.
7. ASTM D2244 – Standard Test Method for Calculation of Color Differences from Instrumentally Measured Color Coordinates.
8. ASTM D2794 – Standard Test Method for Resistance of Organic Coatings to the Effects of Rapid Deformation (Impact).
9. ASTM D3359 – Standard Test Method for Measuring Adhesion by Tape Test.
10. ASTM F2408 – Ornamental Fences Employing Galvanized Steel Tubular Pickets.

1.04 SUBMITTALS

A. Submit under provisions of Division 01.

B. Shop Drawings: Layout of fences and gates with dimensions, details, and finishes of components, accessories, and post foundations.

C. Product Data: Manufacturer's catalog cuts indicating material compliance and specified options.

1.05 QUALITY ASSURANCE

A. Manufacturer's Qualifications: Sufficient experience manufacturing similar products.

B. Erector's Qualifications: Sufficient experience installing similar products.

1.06 PROTECTION

A. Damage to Adjoining Property and Existing Surfaces: Contractor shall assume all responsibility for damage to building surfaces and materials and shall restore them to their original condition should damage occur.

1.07 DELIVERY, STORAGE AND HANDLING

A. Deliver, store and handle materials so as to avoid damage under provisions of Division 01.

PART 2 - PRODUCTS

2.01 MANUFACTURER

A. Basis-of-Design: Ameristar. Product: Ornamental Picket Fence: Montage II, Majestic Style three rail.

B. Master Halco.

C. Substitutions: Under provisions of Division 01.

2.02 ORNAMENTAL PICKET FENCE

A. Materials:

1. Steel material for fence panels and posts shall conform to the requirements of ASTM A653/A653M, with a minimum yield strength of 45,000 psi and a minimum zinc (hot-dip galvanized) coating weight of 0.90 ounces per square foot, Coating Designation G-90.
2. Material for pickets shall be 1 inch square x 14 gauge tubing. The rails shall be steel channel, 1.75 inches x 1. 75 inches x 0.105 inch. Picket holes in the rail shall be spaced 4.715 inches on center. Fence posts and gate posts shall meet the minimum size requirements of Table 1 below.

B. Fabrication:

1. Pickets, rails, and posts shall be pre-cut to specified lengths. Rails shall be pre-punched to accept pickets.
2. Pickets shall be inserted into the pre-punched holes in the rails and shall be aligned to standard spacing using a specially calibrated alignment fixture. The aligned pickets and rails shall be joined at each picket-to-rail intersection by manufacturer's proprietary fusion welding process completing the rigid panel assembly, producing a virtually seamless appearance, equally attractive from either side of the panel.

3. The manufactured fence system shall be capable of meeting the vertical load, horizontal load, and infill performance requirements for Industrial weight fences under ASTM F2408.

C. Finish: The manufactured panels and posts shall be subjected to an inline electrodeposition coating (E-Coat) process consisting of a multi-stage pretreatment/wash, followed by a duplex application of an epoxy primer and an acrylic topcoat. The minimum cumulative coating thickness of epoxy and acrylic shall be 2 mils. The color shall be Black. The coated panels and posts shall be capable of meeting the performance requirements for each quality characteristic shown in Table 2 below. The requirements in Table 2 meet or exceed the coating performance criteria of ASTM F2408.

2.03 ACCESSORIES

A. Rail Attachment Brackets: Pressed steel or cast malleable iron.

B. Ornamental Picket Fence Accessories: Provide indicated items required to complete fence system. Galvanize each ferrous metal item in accordance with ASTM A653/A653M and finished to match framing.

C. Post Caps: Formed steel, cast or malleable iron or aluminum alloy, weathertight closure cap. Provide one standard post cap for each post.

D. Picket Tops: Provide standard steel top.

2.04 SETTING MATERIALS

A. Concrete: Minimum 28 day compressive strength of 2,500 pounds per square inch for setting fence posts. Refer to Section 03 30 53.

PART 3 - EXECUTION

3.01 EXAMINATION

A. Verify areas to receive fencing are completed to final grades and elevations.

B. Ensure property lines and legal boundaries of work are clearly established.

3.02 ORNAMENTAL PICKET FENCE INSTALLATION

A. Install fence in accordance with manufacturer’s instructions.

B. Fence posts shall be spaced according to Table 3 below, plus or minus 1/2 inch. For installations that must be raked to follow sloping grades, the post spacing dimension shall be measured along the grade. Fence panels shall be attached to posts with brackets supplied by the manufacturer.

C. Concrete Footings: Drill holes in firm, undisturbed or compacted soil. Holes shall have diameter four times greater than outside dimension of posts and depths approximately 6 inches deeper than post bottom. Excavate deeper as required for adequate support in soft and loose soils and for posts with heavy lateral loads. Set post bottom below surface when in firm, undisturbed soil. Place concrete around posts in a continuous pour. Trowel finish around post and slope to direct water away from posts. Posts shall be set in concrete footers having a minimum depth of 36 inches; refer to Drawings for footing sizes.

D. Check each post for vertical and top alignment and maintain in position during placement and finishing operations.

E. Align fence panel posts. Panels shall be attached to posts using mechanically fastened panel brackets supplied by the manufacturer.

F. When cutting/drilling rails or posts adhere to the following steps to seal the exposed steel surfaces:

1. Remove all metal shavings from cut area.
2. Apply zinc-rich primer to thoroughly cover cut edge and/or drilled hole; let dry.
3. Apply two coats of custom finish paint matching fence color. Failure to seal exposed surfaces per steps 1-3 above will negate warranty. Manufacturer's spray cans or paint pens shall be used to prime and finish exposed surfaces; it is recommended that paint pens be used to prevent overspray. Use of parts or components not provided by manufacturer will negate the manufactures' warranty.

3.03 ACCESSORIES

A. Install post caps and other accessories to complete fence.

3.04 CLEANING

A. Cleaning and Finishing: Upon completion of the work, clean all exposed surfaces, removing any discoloration or foreign matter.

B. Touch up all abraded or scraped areas with touch-up paint to match fence color. Touch-up shall not be obvious.

C. Protect all installed work against damage from other construction work.

D. Clean Up: Upon completion of the work of this Section, remove all surplus materials, rubbish, and debris from the fence installation area.

Table 1 – Minimum Sizes for Montage II Posts			
Fence Posts	Panel Height		
2-1/2 inches x 12 gauge	Up to and including 6 feet height		
3 inches x 12 gauge	Over 6 feet and up to and Including 8 feet height		
Note: All posts have a square profile.			
Gate Leaf	Gate Height		
	Up to and Including 4 feet	Over 4 feet and up to and including 6 feet	Over 6 feet and up to and including 8 feet
Up to 4'	2-1/2" x 12 gauge	3" x 12 gauge	3" x 12 gauge
4'-1" to 6'	3" x 12 gauge	4" x 11 gauge	4" x 11 gauge
6'-1" to 8'	3" x 12 gauge	4" x 11 gauge	6" x 3/16"
8'-1" to 10'	4" x 11 gauge	6" x 3/16"	6" x 3/16"
10'-1" to 12'	4" x 11 gauge	6" x 3/16"	6" x 3/16"
12'-1" to 14'	4" x 11 gauge	6" x 3/16"	6" x 3/16"
14'-1" to 16'	6" x 3/16"	6" x 3/16"	6" x 3/16"

Table 2 – Coating Performance Requirements		
Quality Characteristics	ASTM Test Method	Performance Requirements
Adhesion	D3359 – Method B	Adhesion (Retention of Coating) over 90 percent of test area (Tape and knife test).
Corrosion Resistance	B117, D714, and D1654	Corrosion Resistance over 1,500 hours (Scribed per ASTM D1654; failure mode is accumulation of 1/8 inch coating loss from scribe or medium #8 blisters).
Impact Resistance	D2794	Impact Resistance over 60 inch pounds (Forward impact using 0.625 inch ball).
Weathering Resistance	D523, D822, and D2244 (60˚ Method)	Weathering Resistance over 1,000 hours (Failure mode is 60 percent loss of gloss or color variance of more than 3 delta-E color units).

Table 3 – Montage II – Post Spacing By Bracket Type						
Span	8 feet nominal for 92-5/8 inch long rail					
Post Size	2-1/2 inches	3 inches	2-1/2 inches	3 inches	2-1/2 inches	3 inches
Bracket Type	Industrial Universal 2.5 inches (BB302) 3 inches (BB303)		Industrial Flat Mount (BB301)		Industrial Swivel (BB304)*	
Post Settings ± 1/2 inch on center	96 inches	96-1/2 inches	96 inches	96-1/2 inches	*96 inches	*96-1/2 inches
*Note: When using BB304 swivel brackets on either or both ends of a panel installation, care must be taken to ensure the spacing between post and adjoining pickets meets applicable codes. This will require trimming one or both ends of the panel.						

END OF SECTION

SECTION 32 31 19.16

SWINGING DECORATIVE METAL GATES

PART 1 - GENERAL

1.01 SECTION INCLUDES

A. Gates, framework, and accessories.

1.02 RELATED SECTIONS

A. Section 03 30 53 – Miscellaneous Cast-In-Place Concrete.

B. Section 08 71 00 – Gate Hardware.

C. Section 32 31 19 – Decorative Metal Fences.

1.03 REFERENCES

A. The publications listed below form a part of this Section to the extent referenced. The publications are referred to in the text by the basic designation only. Refer to Division 01 for definitions, acronyms, and abbreviations.

B. Standards, manuals, and codes refer to the latest edition of such standards, manuals, and codes in effect as of the date of issue of this Project Manual, unless indicated otherwise in CBC Chapter 35 and CFC Chapter 80.

C. Referenced Standards:

1. ASTM B117 – Standard Practice for Operating Salt Spray (fog) Testing Apparatus.
2. ASTM D523 – Standard Test Method for Specular Gloss.
3. ASTM D714 – Standard Test Method for Evaluating Degree of Blistering in Paint.
4. ASTM D822 – Standard Practice for Conducting Tests on Paint and Related Coatings and Materials using Filtered Open-Flame Carbon-Arc Light and Water Exposure Apparatus.
5. ASTM D1654 – Standard Test Method for Evaluation of Painted or Coated Specimens Subjected to Corrosive Environments.
6. ASTM D2244 – Standard Test Method for Calculation of Color Differences from Instrumentally Measured Color Coordinates.
7. ASTM D2794 – Standard Test Method for Resistance of Organic Coatings to the Effects of Rapid Deformation (Impact).
8. ASTM D3359 –Standard Test Method for Measuring Adhesion by Tape Test.
9. ASTM F2408 – Ornamental Fences Employing Galvanized Steel Tubular Pickets.

1.04 SUBMITTALS

A. Submit under provisions of Division 01.

B. Shop Drawings: Shop drawings shall show gate elevation, dimensions, all component parts, and all fabrication details.

C. Product Data: Manufacturer's catalog cuts indicating material compliance and specified options.

1.05 QUALITY ASSURANCE

A. Manufacturer's Qualifications: Sufficient experience manufacturing similar products.

B. Erector Qualifications: Sufficient experience installing similar products.

1.06 REGULATORY REQUIREMENTS

A. All accessible gates shall meet all applicable requirements for doors per CBC Chapter 11B, Sections 11B-206.5 and 11B-404.1.

B. Hand-activated opening hardware, handles, pulls, latches, locks and other operating devices for accessible gates shall have a shape that is easy to grasp with one hand and does not require tight grasping, tight pinching or twisting of the wrist to operate per CBC Sections 11B-309.4 and 11B-404.2.7.

C. The lever of lever actuated latches or locks for an accessible gate shall be curved with a return to within 1/2 inch of the face of gate per California Referenced Standards code, Title 24, Part 12, Section 12-10-202, Item (F).

D. The bottom 10 inches of an accessible gate shall have a smooth, uninterrupted surface on each side. Bottom of the gates shall be within 3 inches of finish surface of the path of travel. Maximum effort to operate a gate shall not exceed 5 pounds per CBC Sections 11B-404.2.9.

E. Gate hardware installed at exterior locations subject to moisture or other weather-related elements shall be UL listed for all-weather use in wet locations and installation shall conform to 2022 CBC/CFC Section 1010.2.9, CCR Title 19 and UL 305.

1.07 PROTECTION

A. Damage to Adjoining Property and Existing Surfaces: Contractor shall assume all responsibility for damage to building surfaces and materials and shall restore them to their original condition should damage occur.

1.08 DELIVERY, STORAGE AND HANDLING

A. Deliver, store and handle materials so as to avoid damage under provisions of Division 01.

PART 2 - PRODUCTS

2.01 MANUFACTURER

A. Basis-of-Design: Ameristar. Product: Ornamental Picket Swinging Gates: Montage II, Majestic Style three rail. Gates, accessories, and finish shall match decorative metal fencing.

B. Master Halco.

C. Substitutions: Under provisions of Division 01.

2.02 MATERIALS

A. Swing gates shall be fabricated using 1.75 inch x 14 gauge double channel rail, 2 inches square x 12 gauge gate ends, and 1 inch square x 14 gauge pickets. Gates that exceed 6 feet in width shall have a 1.75 inch square x 14 gauge intermediate upright. All rail and upright intersections shall be joined by welding. All picket and rail intersections shall also be joined by welding. Gusset plates shall be welded at each upright to rail intersection. Gate sizes as indicated on Drawings.

B. Gate Posts: Refer to Section 32 31 19. Provide top cap at each post.

C. Bracing: Provide cable kits for additional trussing for all gates leaves over 6 feet wide.

D. Finish: The manufactured panels and posts shall be subjected to an inline electrodeposition coating (E-Coat) process consisting of a multi-stage pretreatment/wash, followed by a duplex application of an epoxy primer and an acrylic topcoat. The minimum cumulative coating thickness of epoxy and acrylic shall be 2 mils (0.058 mm). The color shall be Black. The coated panels and posts shall be capable of meeting the performance requirements for each quality characteristic shown in Table 1 below. The requirements in Table 1 below meet or exceed the coating performance criteria of ASTM F2408.

E. Perforated Metal Panels: Item No. 1431141648 as manufactured by McNichols or accepted equal, with the following characteristics:

1. Material: G90 galvanized steel.
2. Thickness: 16 gauge; 0.0635 inch.
3. Hole Pattern: 3/16 inch diameter round holes on 1/4 inch 60 degree staggered centers.
4. Holes per Square Inch: 18.47.
5. Open Area: 51 percent.
6. Bar Width: 1/16 inch.
7. Straight Rows Parallel to: Length of Sheet.
8. Margins Parallel to Width: Sheared through both ends.
9. Margins Parallel to Length: Minimum solid both sides.
10. End Pattern: Sheared through both ends.
11. Factory Finish: Mill finish.
12. Site Finish: Paint finish under provisions of Section 09 91 00.

F. Gate Hardware: Refer to Section 08 71 00.

1. Provide metal fabrications to accept gate hardware as indicated on Drawings.

2.03 FABRICATION

A. Swinging gates shall be constructed as specified in this Section and as indicated on Drawings.

B. Use materials of size and thickness indicated or, if not indicated, as required to produce strength and durability in finished product for use intended. Work to dimensions shown or accepted on shop drawings, using proven details of fabrication and support. Use type of materials shown or specified for various components of work.

C. Form exposed work true to line and level with accurate angles and surfaces and straight sharp edges. Ease exposed edges to a radius of approximately 1/32 inch unless otherwise indicated.

D. Weld corners and seams continuously, complying with AWS recommendations. At exposed connections, grind exposed welds smooth and flush to match and blend with adjoining surfaces.

E. Form exposed connections with hairline joints, flush and smooth, using concealed fasteners.

F. Fabricate to design, dimensions and details indicated. Provide members formed of galvanized steel tube sizes indicated.

G. Interconnect members by butt-welding or welding with internal connectors, at fabricator's option. Provide closures, flanges, miscellaneous fittings, and anchors for interconnections of tube and attachment of members to other work.

H. Fabricate and furnish gates complete with all hardware as indicated.

I. Bracing: Provide diagonal adjustable length truss rods on gates to prevent sag.

2.04 SETTING MATERIALS

A. Concrete: Minimum 28 day compressive strength of 2,500 pounds per square inch for setting gate posts. Refer to Section 03 30 53.

PART 3 - EXECUTION

3.01 EXAMINATION

A. Verify areas to receive gates are completed to final grades and elevations.

3.02 INSTALLATION

A. Install gates in accordance with manufacturer's instructions.

B. Gate posts shall be spaced according to the manufacturers' gate drawings, dependent on standard out-to-out gate leaf dimensions and gate hardware selected. Type and quantity of gate hinges shall be based on the application; weight, height, and number of gate cycles. The manufacturers' gate drawings shall identify the specified gate hardware required for the application. Gate hardware shall be installed under provisions of Section 08 71 00.

C. Concrete Footings: Drill holes in firm, undisturbed or compacted soil. Holes shall have diameter four times greater than outside dimension of posts and depths approximately 6 inches deeper than post bottom. Excavate deeper as required for adequate support in soft and loose soils and for posts with heavy lateral loads. Set post bottom below surface when in firm, undisturbed soil. Place concrete around posts in a continuous pour. Trowel finish around post and slope to direct water away from posts. Posts shall be set in concrete footers having a minimum depth of 36 inches; refer to Drawings for footing sizes.

D. Workmanship: All work shall be installed level and plumb and securely anchored to the wall structure.

E. Gate: Install gate plumb, level and secure for a full opening without interference. Gate shall operate freely and without bind.

1. Adjust fencing prior to anchoring to ensure matching alignment at abutting joints.
2. Cutting, Fitting and Placement: Perform cutting, drilling, and fitting required for installation of gate assemblies. Set work accurately in location, alignment, and elevation, plumb, level, true and free of rack, measured from established lines and levels. Install in concrete foundations as indicated.
3. Fit exposed connections accurately together to form tight hairline joints. Weld connections which are not to be left as exposed joints, but cannot be shop welded because of shipping size limitations. Grind exposed joints smooth and touch-up galvanizing and shop prime coats.
4. Field Welding: Comply with AWS Code for procedures of manual shielded metal-arc welding appearance and quality of welds made.

F. Coordinate installation of gates with installation of fencing.

3.03 ADJUST AND CLEAN

A. Adjusting: Adjust gate as required for smooth, unhindered operation.

B. Cleaning and Finishing: Upon completion of the work, clean all exposed surfaces, removing any discoloration or foreign matter.

C. Touch up all abraded or scraped areas with touch-up paint to match gate color. Touch-up shall not be obvious.

D. Protect all installed work against damage from other construction work.

E. Lubricate hardware and other moving parts.

F. Clean Up: Upon completion of the work of this Section, remove all surplus materials, rubbish and debris from the gate installation area.

Table 1 – Coating Performance Requirements		
Quality Characteristics	ASTM Test Method	Performance Requirements
Adhesion	D3359 – Method B	Adhesion (Retention of Coating) over 90 percent of test area (Tape and knife test).
Corrosion Resistance	B117, D714, and D1654	Corrosion Resistance over 1,500 hours (Scribed per ASTM D1654; failure mode is accumulation of 1/8 inch coating loss from scribe or medium #8 blisters).
Impact Resistance	D2794	Impact Resistance over 60 inch pounds (Forward impact using 0.625 inch ball).
Weathering Resistance	D523, D822, and D2244 (60˚ Method)	Weathering Resistance over 1,000 hours (Failure mode is 60 percent loss of gloss or color variance of more than 3 delta-E color units).

END OF SECTION

ARCHITECTURE
ENGINEERING
PLANNING
INTERIORS
SUSTAINABILITY
GRAPHICS

www.lionakis.com