San Mateo Union High School District
Burlingame High School Parking Lot Expansion Project

Addendum 1

March 27, 2026

Owner:
San Mateo Union High School District
650 North Delaware
San Mateo, CA, 94401-1765

Architect:
Dreiling Terrones Architecture
1103 Juanita Ave.
Burlingame, CA 94010

To: Prospective Bidders

The following changes, modifications and additions to Project Manual and Drawings described below are made a part thereof and are subject to all of the requirements thereof as if originally specified. The Bidder must acknowledge receipt of the Addendum in the space provided on the Bid Form; failure to do so may subject the Bidder to disqualification.

Item No. 1 – Clarification to Bid due date

*This addendum serves as notification that we have issued a new bid due date has been pushed out to **Tuesday, April 14th, at 2 PM**. To be a responsive bid, all responses must be **hand-delivered to** SMUHSD, Capital Facilities & Construction, 1350 Bayshore Highway, Suite 150, Burlingame, CA 94010; attention: Tina Martinez, Capital Facilities Manager.*

Item No. 2 – Clarification to pre-bid RFI #1 Q: Iran Contracting Act Certification & OCIP Insurance Forms are missing from Spec Book.

Response to pre-bid RFI #1:

OCIP/ICAC is NIC (Not included in Contract).

Item No. 3 – Clarification to pre-bid RFI #2 Q: On Bid Proposal Form Allowance #2 has written Fifteen Thousand Dollars but $25,000 is numerically noted (which supersedes).

Response to pre-bid RFI #2:

Corrected. Allowance #2 should be twenty-five thousand dollars ($25,000)

Item No. 4 – Clarification to pre-bid RFI #3 Q: On Bid Proposal Form Allowance #3 has written Twenty-Five Thousand but $20,000 is numerically noted (which supersedes).

Response to pre-bid RFI #3:

Corrected. Allowance #3 should be twenty-five thousand dollars ($25,000)

Item No. 5 – Clarification to pre-bid RFI #4 Q: Since this is an email bid are we to send the original bid bond prior to the San Mateo Union HS District Office or will email submission Bid Bond suffice?

Response to pre-bid RFI #4:

Corrected. Hard copy to be delivered with bid package (in person.)

Item No. 6 – Clarification to pre-bid RFI #5 Q: In the Instruction to Bidders, is notes "a hard copy can be delivered post email submission." Is this a requirement or will the email submission suffice on bid date?

Response to pre-bid RF I #5:

Corrected, This will be a hand delivered bid. Bids received after the bid due date or time will be considered non-responsive.

Item No. 7 – Clarifications to Scope of Work

Item	*Description*	*Reference*
A.	*Remove two existing +/-3'' diameter trees, in the area of new parking*	***A1.2,** clouded revisions labeled delta #1*
B.	*Plant (2) new 24'' box ''Scarlet Maple'' in turf area adjacent to new parking, per planting & staking detail*	***A1.2,** clouded revisions labeled delta #1*
C.	*Remove and replace existing wooden sign poles with new galvanized steel poles, painted white to match other existing steel poles.*	***C1.0 & C3.0,** clouded revisions labeled delta #1*
D.	*Add slurry seal coating and painting of existing stamped perimeter ''brick'' at walkway adjacent to existing parking stalls.*	***C2.0 & C3.0,** clouded revisions labeled delta #1*
E.	*Add Parking Stall Numbering & Designation, per added note.*	***C3.0,** clouded revisions labeled delta #1*
F.	*Paint new accessible sign pole white to match existing steel sign poles.*	***7/C4.0,** clouded revisions labeled delta #1*
G.	*Note revised detail numbering.*	***C4.0,** clouded revisions labeled delta #1*

ATTACHMENTS:

A2.1 – dated "Bid Addendum: 3/26/26
C1.0 – dated "Bid Addendum: 3/26/26
C2.0 – dated "Bid Addendum: 3/26/26
C3.0 – dated "Bid Addendum: 3/26/26
C4.0 – dated "Bid Addendum: 3/26/26

This addendum consists of 3 PAGES
End of Addendum 1

INSTRUCTIONS TO BIDDERS

Each bid proposal submitted to the San Mateo Union High School District ("District") for the **Burlingame High School Parking Expansion project** ("Project") must be submitted in accordance with the following instructions:

1. Deadline for Receipt of Proposals. Bid proposals **hard copies** should be submitted to the District's, Capital Facilities and Construction Manager, **Tina Martinez**, **tmartinez@smuhsd.org** no later than **Tuesday, April 14th by 2:00pm** at 1350 Old Bayshore Hwy, Suite 150, Burlingame, CA 94010. Any bids received after the time stated shall not be opened and shall be returned, to the bidder.

2. Bidders Conference. A MANDATORY bidder's conference will be held on **Thursday, March 12, 2026 and Thursday, March 19, 2026 at 10:00 AM** for the purpose of acquainting all prospective bidders with the bid documents and the work site. All prospective bidders will meet at: 1 Mangini Way, Burlingame, CA 94010.

3. Requests for Information. Any questions relative to the bid should be in writing and directed to Capital Faculties and Construction Specialist: **Jasmine Andrade**, JAndrade@smuhsd.org.

4. Bid Proposal Forms. Bid proposals must be made on the form provided by the District. All items on the form should be filled out. Numbers should be stated in figures, and the signatures of all individuals must be in long hand. The completed form should be without interlineations, alterations, or erasures.

5. Execution of Forms. Each bid must give the full business address of the bidder and must be signed by the bidder or bidder's authorized representative with his or her usual signature. Bids by partnerships must furnish the full names of all partners and must be signed in the partnership name by a general partner with authority to bind the partnership in such matters. Bids by corporations must be signed with the legal name of the corporation, followed by the signature and designation of the president, secretary, or other person authorized to bind the corporation in this matter. The name of each person signing shall also be typed or printed below the signature. When requested by the District, satisfactory evidence of the authority of the officer signing on behalf of the corporation shall be furnished. A bidder's failure to properly sign required forms may result in rejection of the bid. All bids must include the bidder's contractor license number(s) and expiration date(s).

6. Bid Security. Bid proposals should be accompanied by a certified or cashier's check or bid bond for an amount not less than ten percent (10%) of the bid amount, payable to the order of the District. A bid bond must be secured by an admitted surety company, licensed in the State of California, and satisfactory to the District. The bid security shall be given as a guarantee that the bidder will enter into the Contract if awarded the work, and in the case of refusal or failure to enter into the contract within ten (10) calendar days after notification of the award of the contract or failure to provide payment and performance bonds and proof of insurance as required by the Contract Documents, the District shall have the right to award to another bidder and declare the bid security forfeited. The District reserves the right to declare the bid bond forfeited and to pursue all other remedies in law or equity relating to such breach including, but not limited to, seeking recovery of damages for breach of contract. Failure to provide bid security, or bid security in the proper amount, will result in rejection of the bid.

7. Withdrawal of Bid Proposals. Bid proposals may be withdrawn by the bidders prior to the time fixed for the opening of bids, but may not be withdrawn for a period of ninety (90) days after the opening of bids, except as permitted pursuant to Public Contract Code section 5103.

8. Addenda or Bulletins. Any addenda or bulletins issued prior to bid time shall form a part of the drawings and Specifications issued to bidders for the preparation of their proposals and shall constitute a part of the Contract Documents. No addenda will be issued in response to bidder requests received later than five (5) days before the scheduled opening of bids, but the District reserves the right to issue addenda prior to bid the subject to the limitations of Public Contract Code section 4104.5.

9. Bonds. The successful bidder shall be required to submit payment and performance bonds as specified in the Contract Documents. All required bonds shall be calculated on the maximum total purchase price as awarded, including additive alternates, if applicable. A bidder's failure to submit the bonds as requested shall result in rejection of the bid proposal.

10. Rejection of Bids and Award of Contract. The District reserves the right to waive any irregularities in the bid, the right to accept or reject any and all bids, or to accept or reject any portion or combination thereof, or to abandon the work entirely, when to do so is in its own best interest. The Contract will be awarded, if at all, within sixty (60) calendar days after opening of Bids, to the “best value” bidder complying with the requirements of the Contract Documents, subject to Governing Board approval. The time for awarding the Contract may be extended by the District.

11. Execution of Contract. The successful bidder shall, within ten (10) calendar days of notice of award of the contract, sign and deliver to the District the executed contract along with the bonds and certificates of insurance required by the Contract Documents. The Agreement is included in this document. In the event the bidder to whom an award is made fails or refuses to execute the contract within ten (10) calendar days from the date of notification that the contract has been awarded to the bidder, or fails to provide the bonds and certificates as required, the District may declare the bidder's bid deposit or bond forfeited as damages caused by the failure of the bidder to enter into the contract, and may award the work to the next "best value" responsive bidder, or may reject all bids and, at its sole discretion, call for new bids.

12. Drawings and Specifications. Each bidder shall be required to return to the District all drawings and Specifications in an un-mutilated condition and without any marks or annotations. All drawings, Specifications and other documents used or prepared during the project shall be the exclusive property of District.

13. Evidence of Responsibility. Upon the request of the District, a bidder shall submit promptly to the District satisfactory evidence showing the bidder's financial resources, the bidder's experience in the type of work being required by the District, the bidder's organization available for the performance of the contract and any other required evidence of the bidder's qualifications to perform the proposed contract. The District may consider such evidence before making its decision awarding the proposed contract. Failure to submit evidence of a bidder's responsibility to perform the proposed contract may result in rejection of the bid.

14. Taxes. Taxes shall be included in the bid prices. The District will pay only the State sales and use taxes. Federal excise taxes are not applicable to school districts.

15. Bid Exceptions. All exceptions which are taken in response to this bid must be stated clearly. The taking of bid exceptions or providing false, incomplete or unresponsive statements may result in the disqualification of the bid. Allowance of exceptions will be determined by the governing board, whose decisions shall be final. Any bid exceptions or additional conditions requested after bid closure, which are not detailed within the bid response, may result in disqualification of the bid. No oral or telephonic modification of any bid submitted will be considered and a sealed telegraphic modification may be considered only if received prior to opening of bids. Faxed bids or modifications will not be accepted.

16. Discounts. Any discounts which the bidder desires to provide the District must be stated clearly on the bid form itself so that the District can calculate properly the net cost of the bid proposal. Offers of discounts or additional services not delineated on

the bid form will not be considered by the District in the determination of the lowest responsible bidder.

17. Quantities. The quantities shown are approximate. The District reserves the right to increase or decrease quantities as desired.

18. Prices. Bidders must quote prices F.O.B. unless otherwise noted. Prices should be stated in the units specified and bidders should quote each item separately.

19. Samples. On request, samples of the products being bid shall be furnished to the District.

20. Special Brand Names/Substitutions. In describing any item, the use of a manufacturer or special brand does not restrict bidding to that manufacturer or special brand, but is intended only to indicate quality and type of item desired, except in those instances where the product is designated to match others in use on a particular public improvement either completed or in the course of completion or as otherwise provided in subdivision (b) of Section 3400 of the Public Contract Code, bidders may furnish any material, product, thing or service of comparable quality or utility. Substitute products will be considered either prior to or after the award of the contract in accordance with Section 3400 of the Public Contract Code and as set forth in either the Supplemental Conditions or the Specifications. All data substantiating the proposed substitute as an "equal" item must be submitted with the written request for substitution. The District reserves the right to make all decisions on product and vendor selection.

21. Container Costs and Delivery. All costs for containers shall be borne by the bidder. All products shall conform to the provisions set forth in the federal, county, state and city laws for their production, handling, processing and labeling. Packages shall be so constructed in ensure safe transportation to point of delivery.

22. Bid Negotiations. A bid response to any specific item of this bid with terms such as “negotiable,” “will negotiate,” or similar, will be considered in accordance with the RFP.

23. Prevailing Law. In the event of any conflict or ambiguity between these instructions and state or federal law or regulations, the latter shall prevail. Additionally, all equipment to be supplied or services to be performed under the bid proposal shall conform to all applicable requirements of local, state and federal law, including, but not limited to, California Labor Code Sections 1771, 1778 and 1779.

24. Governing Law and Venue. In the event of litigation, the Contract Documents, Specifications and related matters shall be governed by and construed in accordance with the laws of the State of California, with venue in the state court within the county in which the Project is located.

25. Subcontractors. Pursuant to the Subletting and Subcontracting Fair Practices Act, Public Contract Code Sections 4100-4114, inclusive, every bidder shall, on the enclosed Subcontractor List Form set forth:

a. The name and location of the place of business of each Subcontractor who will perform work or labor or render service to the bidder in or about the work or fabricate and install work in an amount in excess of one-half (1/2) of the one percent (1%) of the bidder's total bid.

b. If the bidder fails to specify a Subcontractor for any portion of the work to be performed under the contract in excess of one-half (1/2) of one percent (1%) of the bidder's total bid, bidder agrees that bidder is fully qualified to and will perform that portion of the work. The successful bidder shall not, without the consent of the District or compliance with Public Contract Code Sections 4100 - 4114, either:

1) Substitute any person as Subcontractor in place of the Subcontractor designated in the original bid;

2) Permit any subcontract to be voluntarily assigned or transferred or allow the work to be performed by anyone other than the original Subcontractor listed in the bid; or

3) Sublet or subcontract any portion of the work in excess of one-half (1/2) of one percent (1%) of the total bid as to which the bidder's original bid did not designate a Subcontractor.

26. Examination of Contract Documents and Work Site. Before submitting a bid proposal, bidders shall examine the Contract Documents, the drawings, and the Specifications. Bidders shall visit the site of the proposed work and shall fully inform themselves of all conditions in and about the work site, the building or buildings, if any, and any work that may have been done thereon. However, no bidder shall visit the site without prior authorization. All bidders are requested to contact the District Superintendent or designee for coordination of site visits. Submission of a bid proposal constitutes acceptance of the terms of this provision.

27. Form of Contract. The bidder selected by the District will be required to execute a contract provided by the District in form and substance substantially similar to that included in the bidding package. The contract and other documents are subject to the approval of the District and its legal counsel.

28. Licenses. Each bidder, and their Subcontractors, if any, must possess all appropriate and required licenses or other permits to perform the work as identified in the Contract Documents. Upon request, each bidder shall furnish the District with evidence demonstrating possession of the required licenses or permits. Failure to promptly submit such evidence to the District's satisfaction may result in rejection of the bid.

29. Denial of Right to Bid. Contractors who have failed to complete the Contractor's Pre-Qualification Questionnaire and/or receive an acceptable score shall be denied the right to bid on this public work contract. Contractors or Subcontractors who have violated state law governing public works shall be denied the right to bid on this public work contract pursuant to California Labor Code Section 1777.7.

30. Bidders Interested in More Than One Bid. No person, firm, or corporation shall be allowed to make, or file, or be interested in more than one bid unless alternate bids are specifically called for. A person, firm, or corporation that has submitted a subproposal to a bidder, or that has quoted prices of materials to a bidder, is not thereby disqualified from submitting a sub-proposal or quoting prices to other bidders or from submitting a prime proposal.

31. Contractor's State License Board. Contractors are required by law to be licensed and regulated by the Contractors' State License Board. Any questions concerning a contractor may be referred to the Registrar, Contractors' State License Board, P. O. Box 26000, Sacramento, California 95826.

32. Fingerprinting. By law it is the District's responsibility to determine whether a contractor must provide fingerprint certification. Pursuant to Education Code section 45125.2, the District considers the totality of the circumstances in order to determine if fingerprinting of employees of a contractor working on a school site is required. Factors to be considered include the length of time the contractor's employees are on school grounds, whether students are in proximity with the location where the contractor's employees are working, and whether the contractor's employees are working alone or with others. A determination regarding whether fingerprint certification is required is contained in the General Conditions.

33. Disabled Veterans Participation Goals. This contract is_/ is not_X_ subject to DVBE. If this project is subject to DVBE, then in accordance with Education Code

section 17076.11, this District has a participation goal for disabled veteran business enterprises ("DVBE") of at least 3 percent per year of the overall dollar amount of funds allocated to the District by the State Allocation Board pursuant to the Leroy F. Greene School Facilities Act of 1998 for construction or modernization and expended each year by the District. Prior to, and as a condition precedent for final payment under any contract for such project, the Contractor shall provide appropriate documentation to the District identifying the amount paid to disabled veteran business enterprises in conjunction with the contract, so that the District can assess its success at meeting this goal. The Office of Small Business and DVBE Certification (OSDC), http://www.dgs.ca.gov/pd/Programs/OSDS.aspx, is an information resource to assist bidders in locating Disabled Veteran Business Enterprises. (Please note: while the OSDC may be used as a resource, the DVBE Program administered by OSDC applies to state contracts, not local agency (school district) contracts.)

34. Labor Compliance Program. This contract is__/ is not_X_ subject to a labor compliance program, as described in subdivision (b)of Section 1771.5 of the Labor Code. If this contract is subject to the requirements of Section 1771.7 of the Labor Code, the District is required initiate and enforce a labor compliance program, as described in subdivision (b) of Section 1771.5 of the Labor Code. The law requires that District's labor compliance program shall include, but not be limited to, the following requirements:

    a. All bid invitations and public works contracts shall contain appropriate language concerning the requirements of this chapter.

    b. A pre-job conference shall be conducted with the contractor and Subcontractors to discuss federal and state labor law requirements applicable to the contract.

    c. Project contractors and Subcontractors shall maintain and furnish, at a designated time, a certified copy of each weekly payroll containing a statement of compliance signed under penalty of perjury.

    d. The District shall review, and, if appropriate, audit payroll records to verify compliance with this chapter.

    e. The District shall withhold contract payments when payroll records are delinquent or inadequate.

f. The District shall withhold contract payments equal to the amount of underpayment and applicable penalties when, after investigation, it is established that underpayment has occurred.

The District has adopted a labor compliance program, which has been submitted to the Director of the Department of Industrial Relations for approval as required by the State Allocation Board. A copy of the labor compliance program as currently adopted by the District is included with these bid documents. The labor compliance program which is approved by the Director of the Department of Industrial Relations will be incorporated by reference into the Contract and it will be enforced as required by state law and regulations and the Director of the Department of Industrial Relations.

In accordance with subdivision (b)(1) of Section 1771.5 of the Labor Code, the following notice is given: Contractor and any Subcontractors are required to review and comply with the provisions of the California Labor Code, Part 7, Chapter 1, beginning with Section 1720, and the regulations of the Department of Industrial Relations implementing those provisions as more fully discussed in the Contract Documents and the Labor Compliance Program. These statutory and regulatory provisions contain specific requirements, for example, concerning the determination and payment of prevailing wages, retention, inspection and auditing of payroll records, use of apprentices, payment of overtime compensation, securing of workers' compensation insurance, and various criminal penalties or fines which may be imposed for violations of the requirements of the chapter. Submission of a bid constitutes Contractor's representation that it has thoroughly reviewed these requirements.

The project is subject to compliance monitoring and enforcement by the California Department of Industrial Relations. In accordance with SB 854, all bidders, contractors and subcontractors working at the site shall be duly registered with the Department of Industrial Relations at time of bid opening and at all relevant times. Proof of registration shall be provided as to all such contractors with bid proposal.

35. Intentionally Omitted.

36. Bid Protest. **Any bid protest** must be in writing and received by the District Office before 5:00 p.m. no later than two (2) working days following Bid opening and must comply with the following requirements:

a. The bid protest must contain a complete statement of the basis for the protest, legal argument with citation to relevant legal authority and all supporting documentation.

b. The party filing the protest must have actually submitted a bid for the Project. A Subcontractor of a bidder submitting a bid for the Project may not submit a bid protest. A bidder may not rely on the bid protest submitted by another bidder but must timely pursue its own protest.

c. The protest must refer to the specific portion or portions of the "Contract Documents," defined as the Contract, any Amendment thereto, Technical Specifications and Drawings, Supplementary General Conditions, General Conditions, Instructions to Bidders, Notice Inviting Bids, Disabled Veteran Business Enterprises Requirements (if applicable), Labor Compliance Program (if applicable), Bid Form, all addenda, required bond(s), and insurance certificates, completed Bidder's Questionnaire, Notice to Proceed upon which the protest is based and state.

d. The protest must include the name, address and telephone number of the person or legal counsel representing the protesting bidder if different from the protesting bidder.

e. The bidder filing the protest must concurrently transmit a copy of the bid protest document and all supporting documentation, as required above, ("Bid Protest Documents") to the District legal counsel: *Sean B. Absher, Stradling Yocca Carlson & Rauth, 44 Montgomery Street, Suite 4200, San Francisco, CA 94104-4803, 415-283-2242 phone, 415-283-2255 fax* and to all other bidders with a direct financial interest which may be affected by the outcome of the protest, including all other bidders who appear to have a reasonable prospect of receiving an award depending upon the outcome of the protest.

f. The bidder whose bid has been protested may submit a written response to the bid protest. Such response shall be submitted to the District no later than 5 p.m., no later than one (1) working day after receipt of the Bid Protest Documents. Such response shall also be transmitted concurrently to the protesting bidder and to all other bidders who appear to have a reasonable prospect of receiving an award depending upon the outcome of the protest.

g. District rules and procedures related to speaker time limits at Board of Trustee public meetings will be strictly enforced. Argument by legal counsel representing any bid protester will be limited to the matters and contents contained in the bid protest and any documents submitted in support of the bid protest

h. The procedure and time limits set forth in this section are mandatory and are the bidder's sole and exclusive administrative remedy in the event of bid protest. The bidder's failure to comply with these procedures shall constitute a waiver of any right to further pursue the bid protest, including filing a writ of mandate, Government Code Claim or other legal proceeding. A bidder

may not rely on a protest submitted by another bidder, but must timely pursue its own protest.

i. If the District determines that a protest is frivolous, the protesting bidder may be determined to be non-responsible and that bidder may be determined to be ineligible for future contract awards by the District.

j. A "working day" for purposes of this section means a weekday during which the District's office is open and conducting business, regardless of whether or not school is in session.

k The District reserves the right to shorten the time period for submitting and responding to a bid protest, whenever the District or its designee determines it is in the District's best interest to do so. Prospective bidders will be notified by addenda of any such change.

BID FORM AND PROPOSAL

To: Governing Board of the San Mateo Union High School District ("District" or "Owner")

From: _____
(Proper Name of Bidder)

The undersigned declares that Bidder has read and understands the Contract Documents, including, without limitation, the Notice to Bidders and the Instructions to Bidders, and agrees and proposes to furnish all necessary labor, materials, and equipment to perform and furnish all work in accordance with the terms and conditions of the Contract Documents, including, without limitation, the Drawings and Specifications of Bid No. _____, for the following project known as:

_____

("Project" or "Contract") and will accept in full payment for that Work the following total lump sum amount, all taxes included:

_____	dollars	$ _____

BASE BID

Total costs for all labor and materials for the execution of the work described in the contract documents. Bidder acknowledges and agrees that the Base Bid excludes the OCIP costs shown below.

Descriptions of allowances are primarily scope definitions and do not necessarily detail the full range of materials and processes needed to complete the construction

_____	dollars	$ _____

ALLOWANCE #1

10% of the BASE BID shown above, to allow for unforeseen items.

Twenty-Five Thousand	dollars	$ 25,000.00

ALLOWANCE #2

For additive costs associated with changes to the scope of the work as a result of the plan check revisions from the review by the Division of the State Architect (DSA). All Bidders shall include this Alternate, with the understanding that the final cost for the revisions associates with the DSA review shall be negotiated with the successful bidder, prior to the execution of the Contract.

Twenty-five thousand dollars $ 25,000.00

ALLOWANCE #3

For additive to remove and replace existing sod. Replacement will likely be necessary, due to stockpiling of existing soils, and re-distribution on site, in order to avoid off-haul of soil.

_____dollars $ _____

Total BID = BASE BID + ALLOWANCE #1 + ALLOWANCE #2 + ALLOWANCE #3

The Total BID shall be the basis for selection of the lowest qualified Bid

Additional Detail Regarding Calculation of Base Bid

1. **Unit Prices**. The Bidder's Base Bid includes the following unit prices, which the Bidder must provide and the District may, at its discretion, utilize in valuing additive and/or deductive change orders (Unit Prices shall include all labor, materials, services, profit, overhead, insurance, bonds, taxes, and all other incidental costs of Contractor, subcontractors, and suppliers):

SCHEDULE OF UNIT PRICES

Item No.	Description	Unit of Measure	Estimated Quantity	Unit Price	Total Cost = Unit Price x Estimated Quantity (Included in Base Bid)
1	Cost for additional grading of one (1) cubic yard of additional earthwork, as specified in the grading plans	cubic yard (c.y.)	one	$_____	$_____
2	Cost per square foot for replacement of the arsenic soils "warning barrier': assume **PVC coated steel hex wire**	Square foot (s.f.)	one	$_____	$_____

3	Cost per square foot to remove and replace existing sod, as a result of stockpiling, and re-distribution of surplus soils on site.	Square foot (s.f.)	one	$ _____	$ _____

Where scope of Work is decreased, all Work pertaining to the item, whether specifically stated or not, shall be omitted, and where scope of Work is increased, all work pertaining to that item required to render same ready for use on the Project in accordance with intentions of the Drawings and Specifications shall be included in the above agreed-upon price amount.

2. **Allowance**. The Bidder's Base Bid and each alternate (if any) shall include a ten percent (10%) allowance for unforeseen items.

   The above allowance shall only be allocated for unforeseen items relating to the Work. Contractor shall not bill for or be due any portion of this allowance unless the District has identified specific work, Contractor has submitted a price for that work or the District has proposed a price for that work, the District has accepted the cost for that work, and the District has prepared an Allowance Expenditure Directive incorporating that work. Contractor hereby authorizes the District to execute a unilateral deductive change order at or near the end of the Project for all or any portion of the allowance not allocated.

3. **OCIP.** Bidder specifically acknowledges and understands that if it is awarded the Contract, that it and its subcontractors shall participate in and comply with the owner-controlled or wrap-up insurance program (OCIP). Bidder and all of its subcontractors are required to exclude the cost of insurance provided by the OCIP from its bid price for the proposed scope of work, including subcontracted work whether or not the subcontractor is identified at the time of the bid. The excluded amount must be shown separately below:

Excluded Cost of Insurance

_____dollars	$ _____
Deductive	

4. The undersigned has reviewed the Work outlined in the Contract Documents and fully understands the scope of Work required in this Proposal, understands the construction and project management function(s) is described in the Contract Documents, and that each Bidder who is awarded a contract shall be in fact a prime contractor, not a subcontractor, to the District, and agrees that its Proposal, if accepted by the District, will be the basis for the Bidder to enter into a contract with the District in accordance with the intent of the Contract Documents.

5. The undersigned has notified the District in writing of any discrepancies or omissions or of any doubt, questions, or ambiguities about the meaning of any of the Contract Documents, and has contacted the Construction Manager before bid date to verify the issuance of any clarifying Addenda.

6. The undersigned agrees to commence work under this Contract on the date established in the Contract Documents and to complete all work within the time specified in the Contract Documents.

7. The liquidated damages clause of the General Conditions and Agreement is hereby acknowledged.

8. It is understood that the District reserves the right to reject this bid and that the bid shall remain open to acceptance and is irrevocable for a period of ninety (90) days.

9. The following documents are attached hereto:

   - Bid Bond on the District's form or other security
   - Designated Subcontractors List
   - Site Visit Certification
   - Non-Collusion Declaration

10. Receipt and acceptance of the following Addenda is hereby acknowledged:

No. _____, Dated _____	No. _____, Dated _____
No. _____, Dated _____	No. _____, Dated _____
No. _____, Dated _____	No. _____, Dated _____

11. Bidder acknowledges that the license required for performance of the Work is a _____ _____license.

12. Bidder hereby certifies that Bidder is able to furnish labor that can work in harmony with all other elements of labor employed or to be employed on the Work.

13. Bidder specifically acknowledges and understands that if it is awarded the Contract, that it shall perform the Work of the Project while complying with all requirements of the Department of Industrial Relations.

14. Bidder hereby certifies that its bid includes sufficient funds to permit Bidder to comply with all local, state or federal labor laws or regulations during the Project, including payment of prevailing wage, and that Bidder will comply with the provisions of Labor Code section 2810(d) if awarded the Contract

15. [Bidder agrees to comply with all requirements of the Project Labor Agreement].

16. Bidder specifically acknowledges and understands that if it is awarded the Contract, that it shall perform the Work of the Project while complying with the Davis Bacon Act, applicable reporting requirements, and any and all other applicable requirements for federal funding. If a conflict exists, the more stringent requirement shall control.

17. Bidder represents that it is competent, knowledgeable, and has special skills with respect to the nature, extent, and inherent conditions of the Work to be performed. Bidder further acknowledges that there are certain peculiar and inherent conditions existent in the construction of the Work that may create, during the Work, unusual or peculiar unsafe conditions hazardous to persons and property.

18. Bidder expressly acknowledges that it is aware of such peculiar risks and that it has the skill and experience to foresee and to adopt protective measures to adequately and safely perform the Work with respect to such hazards.

19. Bidder expressly acknowledges that it is aware that if a false claim is knowingly submitted (as the terms "claim" and "knowingly" are defined in the California False Claims Act, Gov. Code, § 12650 et seq.), the District will be entitled to civil remedies set forth in the California False Claim Act. It may also be considered fraud and the Contractor may be subject to criminal prosecution.

20. The undersigned Bidder certifies that it is, at the time of bidding, and shall be throughout the period of the Contract, licensed by the State of California to do the type of work required under the terms of the Contract Documents and registered as a public works contractor with the Department of Industrial Relations. Bidder further certifies that it is regularly engaged in the general class and type of work called for in the Contract Documents.

Furthermore, Bidder hereby certifies to the District that all representations, certifications, and statements made by Bidder, as set forth in this bid form, are true and correct and are made under penalty of perjury.

Dated this _____day of _____20 ____

Name of Bidder: _____

Type of Organization: _____

Signed by: _____

Title of Signer: _____

Address of Bidder: _____

Taxpayer Identification No. of Bidder: _____

Telephone Number: _____

Fax Number: _____

E-mail: _____ Web Page: _____

Contractor's License No(s): No.: _____Class: _____Expiration Date: _____

No.: _____Class:_____Expiration Date: _____

No.: _____Class:_____Expiration Date: _____

Public Works Contractor Registration No.: _____

END OF DOCUMENT

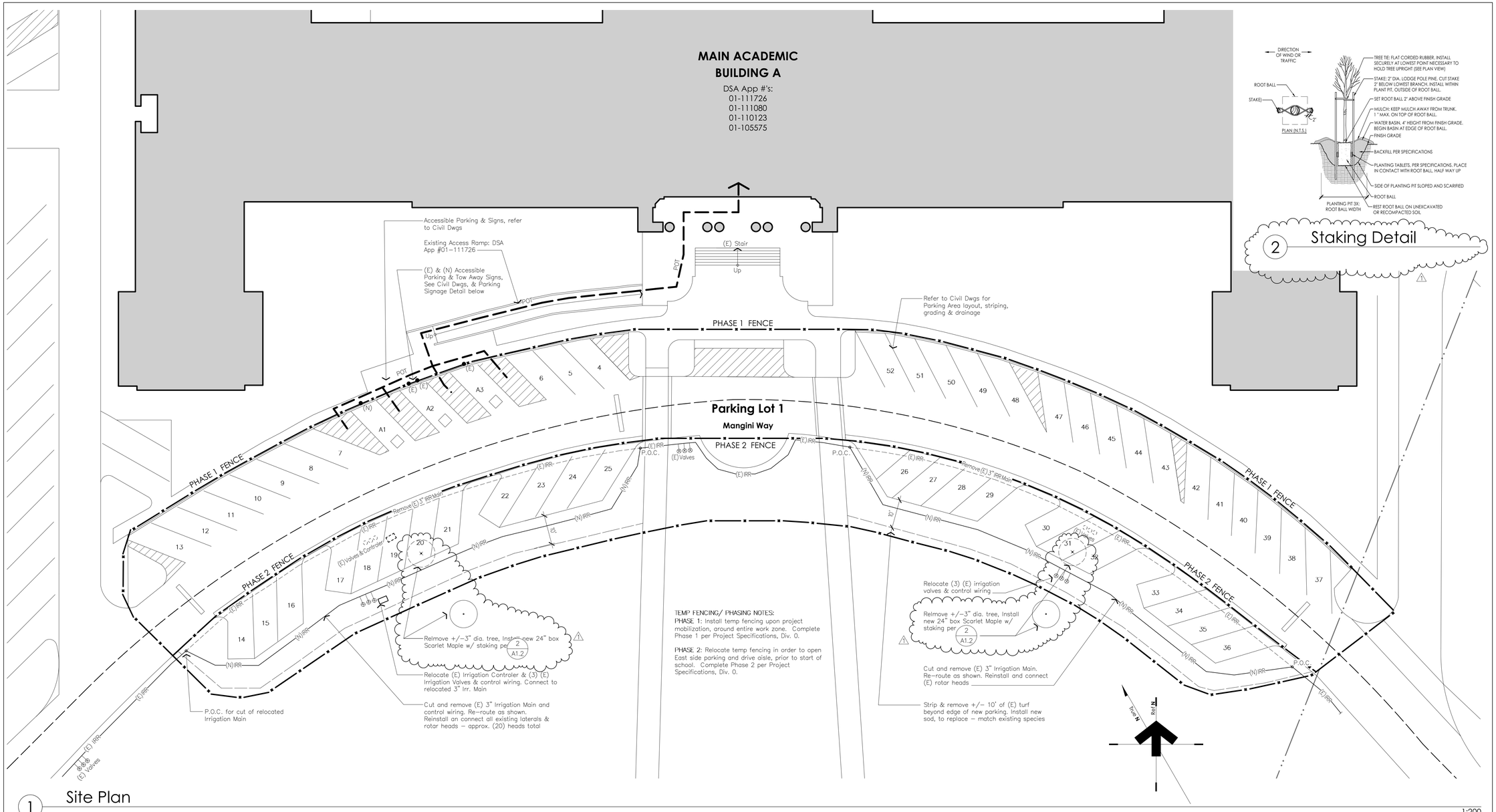

1 Site Plan

1:200

2 Staking Detail

Parking Signage

(E) Accessible Tow Away Sign

Parking Count

Number of Stalls	Parking Stalls / Type
	Parking Lot 1
52	Total New Stalls in Parking Lot 1
3	Accessible Stalls **Required** – per CBC 11B, Table 11B-208.2
3	Accessible Stalls **Provided** – refer to Ci'vil Drawings
	Electric Vehicle Charging Stations
82	Lot Area A Total Stalls
+20	Added Stalls in Parking Lot 1
8	Required EV Stalls for Lot Area A, per CBC Table 5.106.5.3.1
2	Required EV Stalls for Parking Lot 1, per CBC Table 5.106.5.3.1
12	Total EVSE Stalls provided – see Lot Area A, Dwg 1/A1.1

Site Accessibility Notes

1 Path of Travel (P.O.T.):
Accessible Path of Travel as indicated on plan is a barrier-free route without abrupt level changes exceeding 1/2" if beveled at 1:2 maximum slope or vertical level changes not exceeding 1/4" maximum and at least 48" in width Surface is stable, firm, and slip-resistant. Cross-slope shall not be steeper than 1:48, and slope in the direction of travel shall not be steeper than 1:20.

Accessible Path of Travel shall be maintained free of overhanging obstructions to 80" minimum and free of objects protruding more than 4" from the wall, above 27" and less than 80" above the floor. Architect shall verify that there are no barriers in the Path of Travel.

Design Professional In General Responsible Charge Statement
The Path of Travel (POT) identified in these construction documents meets the requirements of the current applicable California Building Code (CBC) accessibility provisions for POT requirements for alterations, additions, and structural repairs. As part of the design of this project, the POT was examined and any elements, components or portions of the POT that were determined to be noncompliant with the CBC have been identified and the corrective work necessary to bring them into compliance has been included within the scope of this project's work through details, drawings, and specifications incorporated into these construction documents. Any noncompliant elements, components, or portions of the POT that will not be corrected by this project based on valuation threshold limitations or a finding of unreasonable hardship are so indicated in these construction documents.

During construction, if POT items within the scope of the project represented as CBC compliant are found to be nonconforming beyond reasonable construction tolerances, the items shall be brought into compliance with the CBC as a part of this project by means of a construction change document.

Site Notes

1 Contractor shall notify Construction Manager & Architect immediately upon discovery of any utilities that are not indicated on survey or Civil Dwgs.
2 Contractor shall protect from damage any underground utilities shall repair any utilities damaged due to construction processes to the satisfaction of District and Architect.
3 Existing landscaping shall be protected as required to prevent any damage to plants and trees, unless specified for removal in plans or by Owner.
4 Verify exact location and size of (E) underground irrigation piping in field.
5 The work zone limits (if any) are shown on the plans. The Contractor shall confine all operations, including delivery of materials, to the Work Zone unless explicit agreement has been made with the District.
6 Roadways outside of Construction Zone shall be maintained clear of construction equipment and materials at all times.
7 The Contractor shall notify Construction Manager on days when deliveries or other operations may impact areas outside of the Work Zone.
8 Refer to Civil Drawings for additional paving layout and notes.
9 Contractor shall be responsible for obtaining encroachment permits for any work in the City Right-of-Way.

Legend

- Property Line
- Fire Lane
- Temp Fence: see TEMP FENCING/PHASING NOTES
- POT — Accessible Path of Travel (POT)

DTA
Dreiling Terrones Architecture Inc.
Architecture
Infrastructure
Environments
1102 Juanita Avenue
Burlingame, California
94010
650 696 1200

New Parking at
Burlingame High School
1 Mangini Way
Burlingame, CA 94010

DSA Submittal: 2/19/26
Issued for Bidding : 3/12/26
⚠ Bid Addendum 01: 3/26/26

Enlarged Site Plan

2506 A1.2

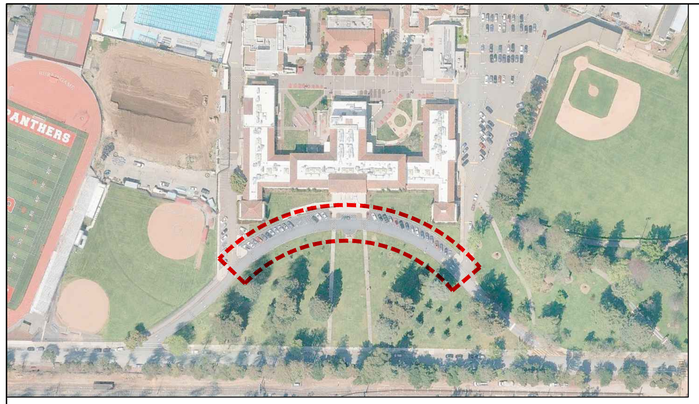

SITE MAP NTS

ARSENIC–INTRUSIVE WORK NOTES

THE CONTRACTOR IS HEREBY NOTIFIED THAT THE EXISTING SOILS IN THE AREAS OF THIS SCOPE OF WORK ARE ARSENIC CONTAINING, AND THEREFORE THIS SCOPE OF WORK HAS BEEN DETERMINED TO BE "ARSENIC INTRUSIVE." THE DISTRICT'S "ARSENIC COORDINATOR" SHALL ASSIST THE CONTRACTOR TO ENSURE THAT THE WORK PRACTICES ARE FOLLOWED IN THE DTSC APPROVED STANDARD OPERATING PROCEDURES (SOP) SHOWN IN THE PROJECT SPECIFICATIONS UNDER "APPENDIX F: STANDARD OPERATING PROCEDURE." THE CONTRACTOR'S SUPERINTENDENT SHALL BE REQUIRED TO UNDERGO APPROXIMATELY ONE HOUR OF AWARENESS TRAINING WITH THE DISTRICT'S ENVIRONMENTAL HEALTH AND SAFETY SPECIALIST ("ARSENIC COORDINATOR").

THE CONTRACTOR PERFORMING ARSENIC–INTRUSIVE WORK AT THE SITE WILL HAVE THE FOLLOWING INFORMATION PROVIDED TO THEM PRIOR TO PERFORMING THE WORK:

- THICKNESS/TYPE OF CAP SYSTEMS AT THE PROPOSED WORK LOCATION;
- POTENTIAL ARSENIC CONCENTRATIONS EXPECTED AT PROPOSED WORK LOCATION; AND
- PRESENCE OF THE WARNING BARRIER ABOVE THE ARSENIC–CONTAINING SOIL THAT IS CURRENTLY PRESENT IN THE AREA OF WORK

SOIL STOCKPILING: REFER TO APPENDIX F, SECTIONS 5 AND 6 FOR SPECIFIC REQUIREMENTS FOR THE PLACEMENT AND STOCKPILING OF SOILS ON SITE DURING THE GRADING AND TRENCHING OPERATIONS OF THE PROJECT. THE EXISTING TURF AREA IN THIS SCOPE OF WORK, CONTAINS THE FOLLOWING CONDITIONS

- ARSENIC CONTAMINATED SOIL BELOW A MESH WARNING BARRIER, WHICH IS APPROXIMATELY 6" – 24" BELOW THE TURF SURFACE.
- UNCONTAMINATED SOIL "CAP" ABOVE THE WARNING BARRIER.
- TURF (SOD) ABOVE THE UNCONTAMINATED CAP.

HANDLING / STOCKPILING SOIL: REASONABLE EFFORTS SHALL BE MADE BY THE CONTRACTOR TO STOCKPILE THE CONTAMINATED SOIL BELOW THE WARNING BARRIER SEPARATELY FROM THE UNCONTAMINATED SOIL ABOVE THE WARNING BARRIER. PLACEMENT OF SOIL FOR FINISHED GRADING SHALL INCLUDE PLACEMENT OF CONTAMINATED SOIL FIRST, WITH THE WARNING BARRIER REINSTALLED OR REPLACED ABOVE THE CONTAMINATED SOIL. UNCONTAMINATED SOIL WILL THEN BE USED TO CAP THE WARNING BARRIER, WITH NEW SOD PLACED ON THE UNCONTAMINATED SOIL AS INDICATED IN THE PLANS.

NOTE: THE CONTRACTOR SHALL NOT BE RESPONSIBLE FOR NOTIFYING THE DEPARTMENT OF TOXIC SUBSTANCES CONTROL (DTSC). THAT SHALL BE THE RESPONSIBILITY OF THE DISTRICT'S ENVIRONMENTAL HEALTH AND SAFETY SPECIALIST ("ARSENIC COORDINATOR").

DEMOLITION LEGEND

- REMOVE EXISTING PAVEMENT
- XXXXXXXXXXXXXX REMOVE EXISTING CURB
- ////////////// REMOVE EXISTING STRIPE
- ——— ——— LIMIT OF SITE DEMOLITION, CLEARING AND GRADING
- – – – – – – – SAW CUT LINE

AC	ASPHALT CONCRETE
AD	AREA DRAIN
CB	CATCH BASIN
CO	CLEAN OUT
CONC.	CONCRETE
EX., EXIST.	EXISTING
TYP.	TYPICAL

GENERAL NOTES

1. THE CONTRACTOR SHALL LAY OUT THE WORK, SETTING GRADE STAKES, ESTABLISHING LINES, BASE LINES, ELEVATIONS AND OTHER REFERENCE MARKERS AND INFORMATION NECESSARY TO COMPLETE THE WORK AND SHALL BE RESPONSIBLE FOR THE ACCURACY THEREOF.

2. ANY INCONSISTENCIES IN EXISTING OR PROPOSED ELEVATIONS SHALL BE BROUGHT TO THE NOTICE OF THE OWNER'S REPRESENTATIVE FOR RESOLUTION PRIOR TO CONSTRUCTION OR AS SOON AS DISCOVERED.

3. IN THE EVENT THAT ANY UNKNOWN UNDERGROUND TANKS OR STRUCTURES OR UTILITY LINES ARE DISCOVERED ON THE SITE, THE CONTRACTOR SHALL NOTIFY THE OWNER'S REPRESENTATIVE TO DETERMINE THE DISPOSITION OF THE STRUCTURE.

4. CONTRACTOR SHALL IMPORT REQUIRED MATERIALS OR EXPORT EXCESS AS REQUIRED TO ESTABLISH PLAN GRADES. EXCESS MATERIAL IF ANY SHALL BE DISPOSED OFF–SITE IN A LEGAL MANNER AT CONTRACTOR'S EXPENSE.

5. EXISTING WATER, STORM AND SANITARY INVERTS SHALL BE EXPOSED AND VERIFIED PRIOR TO ANY NEW CONSTRUCTION.

THE FOLLOWING SECTIONS OF THE STANDARD SITE WORK SPECIFICATIONS FOR THE CONSTRUCTION OF THIS PROJECT ARE APPLICABLE TO THE WORK SHOWN ON THIS DRAWING:

SECTION 311000 – SITE CLEARING

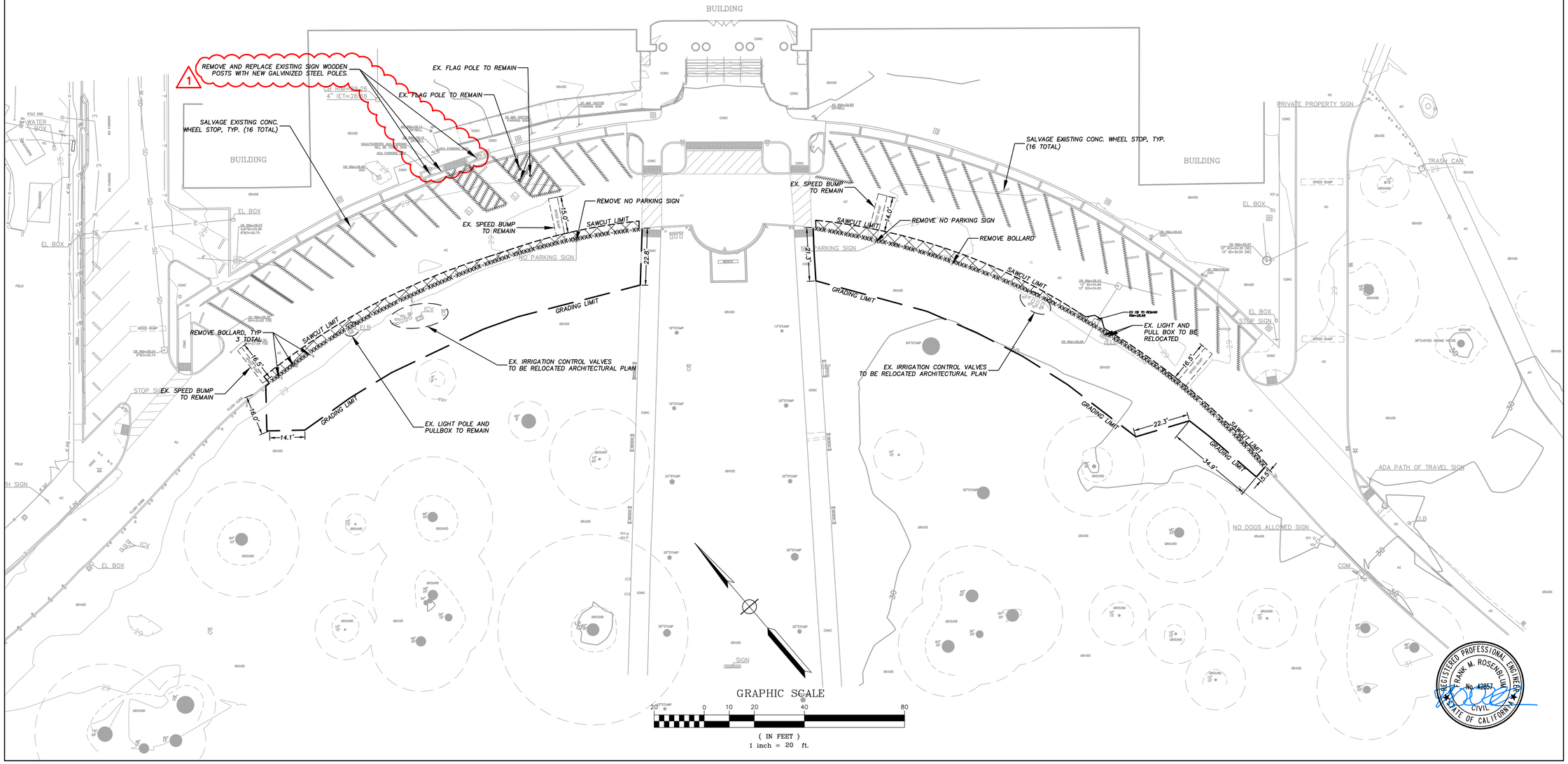

DTA Drelling Terrones Architecture Inc.
Architecture Infrastructure Environments

1103 Juanita Avenue, Burlingame, California 94010, 650.696.1200
314 Center Street #220, Healdsburg, California 95448, 707.431.1305

REGISTERED ARCHITECT RICARDO M. TERRONES NO. C 25886 REN. 10/27 STATE OF CALIFORNIA

UNDERWOOD & ROSENBLUM, INC.
civil engineers and surveyors
163 Orchard Road, Ste. 214 San Jose, Ca 95113
Tel. No. (408) 453 1222
www.uandr.com

PROJECT NO. J25025 PLOT DATE: 03–05–2026

Burlingame High School

1 Mangini Way
Burlingame, CA 94010

DSA Submittal: 2/19/26
Issued for Bidding: 3/12/26
Bid Addendum: 3/26/26 1

REGISTERED PROFESSIONAL ENGINEER FRANK M. ROSENBLUM No. 42857 CIVIL STATE OF CALIFORNIA

SITE DEMOLITION PLAN

2506 C1.0

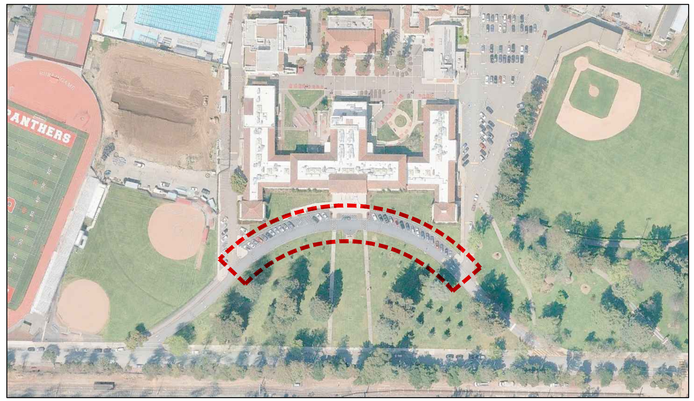

SITE MAP NTS

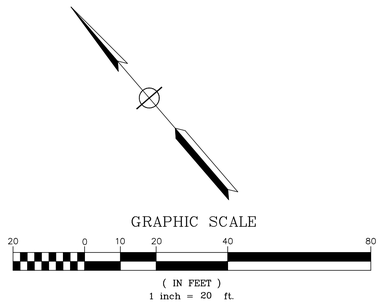

GRADING & PAVING LEGEND

	NEW CONCRETE (6" REINFORCED PCC ON 6" CLASS 2 AB ON 8" RECOMPACTED SUBGRADE (90%))
3" ON 9"	NEW AC PAVEMENT – TRAFFIC (3" AC ON 9" CLASS 2 AB ON 6" RECOMPACTED SUBGRADE (95%))
	SLURRY COAT NEW AND EXISTING AC PAVEMENT PRIOR TO STRIPE
1	SLURRY COAT EXISTING WALKWAY AND PAINT EXISTING STAMPED PERIMETER BRICK PATTERN WITH DAVIS COLORS #16, "BRICK RED" (ADMIXTURE COLOR IS FOR REFERENCE ONLY, NOT THE INTENDED PRODUCT; FINAL COLOR SHALL BE DETERMINED BY THE SCHOOL DISTRICT.)
	LIMIT OF GRADING
	SAW CUT LINE
	DRAINAGE FLOW LINE
	GRADE BREAK LINE
99	FINISH GRADE CONTOUR
	PORTLAND CEMENT CONCRETE
AC	ASPHALT CONCRETE
AD	AREA DRAIN
C, PCC, CONC.	
CB	CATCH BASIN
COTG/SDCO/SSCO	CLEAN OUT TO GRADE
EX., EXIST.	EXISTING
FF	FINISH FLOOR
FL	FLOW LINE
G	GROUND
GB	GRADE BREAK
TC	TOP OF CURB
TW	TOP OF WALL
TYP.	TYPICAL

GENERAL NOTES

1. THE CONTRACTOR SHALL LAY OUT THE WORK, SETTING GRADESTAKES, ESTABLISHING LINES, BASE LINES, ELEVATIONS AND OTHER REFERENCE MARKERS AND INFORMATION NECESSARY TO COMPLETE THE WORK AND SHALL BE RESPONSIBLE FOR THE ACCURACY THEREOF.

2. ANY INCONSISTENCIES IN EXISTING OR PROPOSED ELEVATIONS SHALL BE BROUGHT TO THE NOTICE OF THE OWNER'S REPRESENTATIVE FOR RESOLUTION PRIOR TO CONSTRUCTION OR AS SOON AS DISCOVERED.

3. IN THE EVENT THAT ANY UNKNOWN UNDERGROUND TANKS OR STRUCTURES OR UTILITY LINES ARE DISCOVERED ON THE SITE, THE CONTRACTOR SHALL NOTIFY THE OWNER'S REPRESENTATIVE TO DETERMINE THE DISPOSITION OF THE STRUCTURE.

4. CONTRACTOR SHALL IMPORT REQUIRED MATERIALS OR EXPORT EXCESS AS REQUIRED TO ESTABLISH PLAN GRADES. EXCESS MATERIAL IF ANY SHALL BE DISPOSED OFF-SITE IN A LEGAL MANNER AT CONTRACTOR'S EXPENSE.

5. EXISTING WATER, STORM AND SANITARY INVERTS SHALL BE EXPOSED AND VERIFIED PRIOR TO ANY NEW CONSTRUCTION.

THE FOLLOWING SECTIONS OF THE STANDARD SITE WORK SPECIFICATIONS FOR THE CONSTRUCTION OF THIS PROJECT ARE APPLICABLE TO THE WORK SHOWN ON THIS DRAWING:

SECTION 311000 – SITE CLEARING
SECTION 312000 – EARTHMOVING
SECTION 321216 – ASPHALT PAVING
SECTION 321312 – CONCRETE PAVING

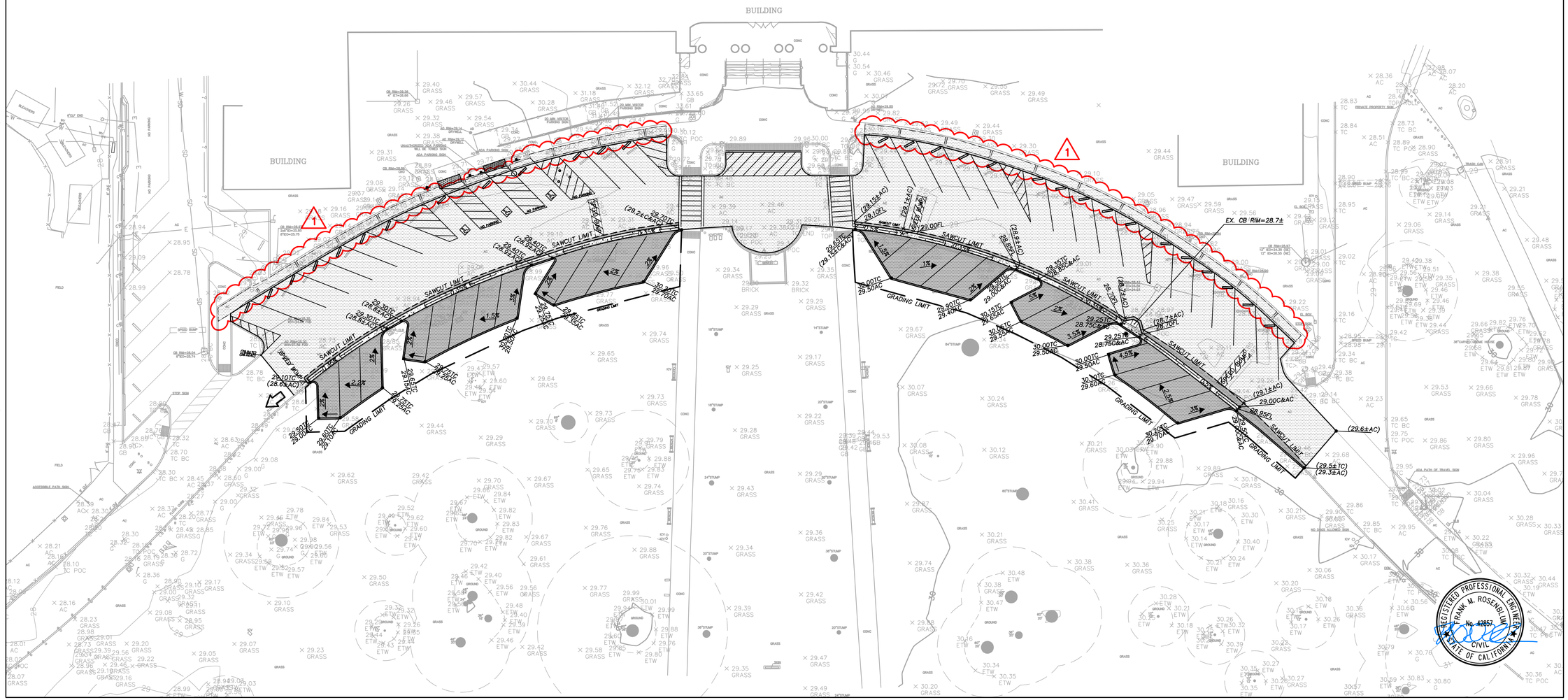

DTA
Dreiling Terrones Architecture Inc.
Architecture
Infrastructure
Environments
1103 Juanita Avenue
Burlingame, California
94010
650 696 1200
314 Center Street #220
Healdsburg, California
95448
707 431 1305

LICENSED ARCHITECT
RICARDO M. TERRONES
NO. C 24686
REN. 10/27
STATE OF CALIFORNIA

UNDERWOOD & ROSENBLUM, INC.
civil engineers and surveyors
1630 Oakland Road Ste. A114 San Jose, Ca. 95131
Tel. No. (408) 453 1222
www.uandr.com

PROJECT NO. J25025 PLOT DATE: 03-05-2026

New Parking at
Burlingame High School
1 Mangini Way
Burlingame, CA 94010

DSA Submittal: 2/19/26
Issued for Bidding: 3/12/26
Bid Addendum: 3/26/26 1

REGISTERED PROFESSIONAL ENGINEER
FRANK M. ROSENBLUM
No. 42857
CIVIL
STATE OF CALIFORNIA

SITE GRADING & PAVING PLAN

2506

C2.0

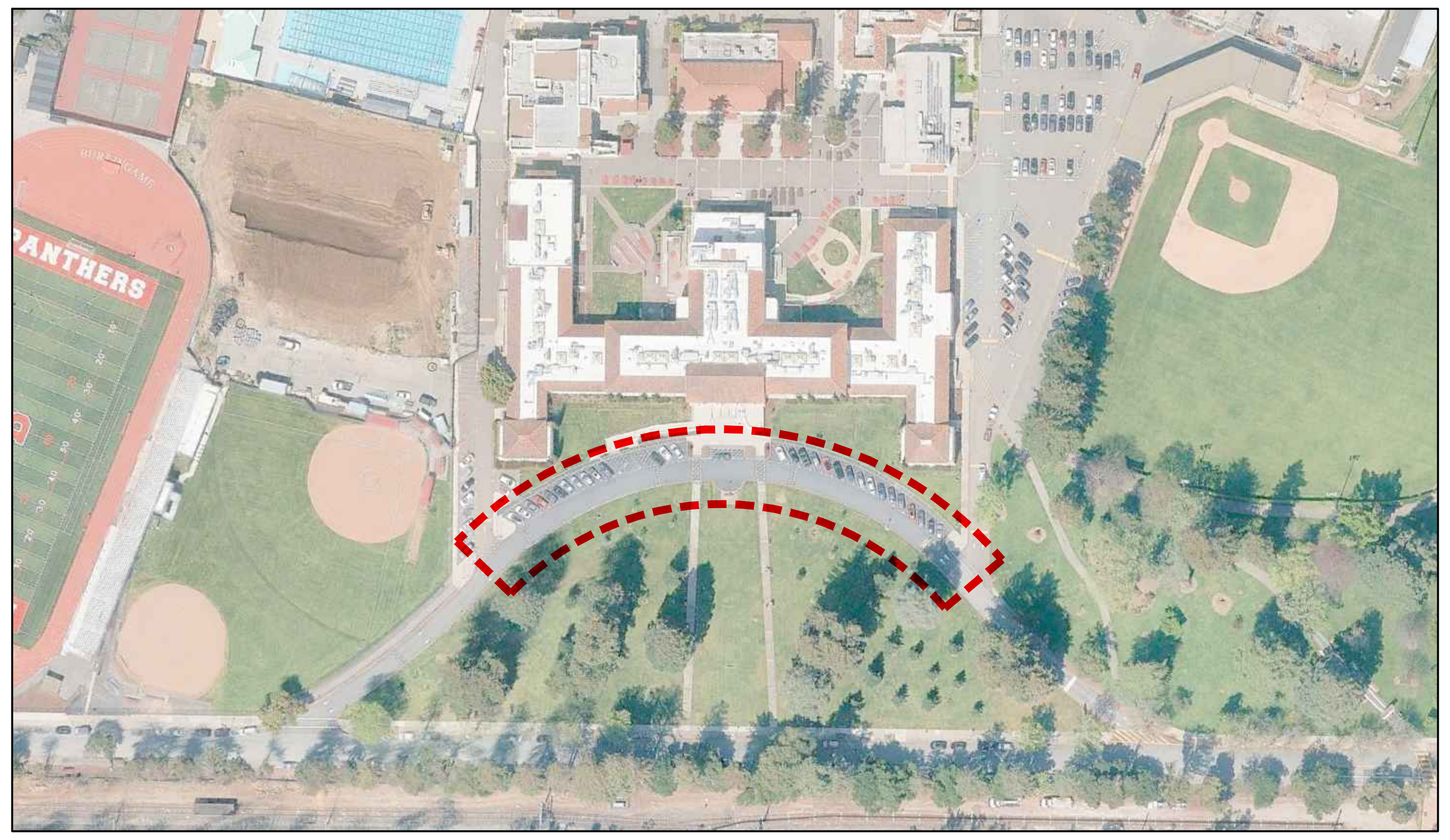

SITE MAP *NTS*

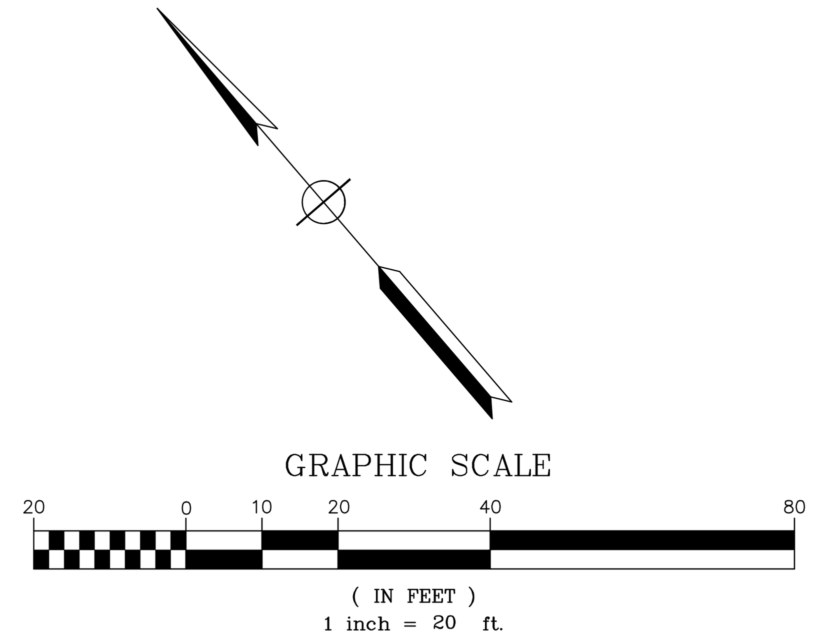

PARKING STALL NUMBERING AND DESIGNATION:
THE CONTRACTOR SHALL PROVIDE AND INSTALL PAVEMENT MARKINGS FOR ALL PARKING STALLS, INCLUDING SEQUENTIAL NUMBERING FOR EACH STALL (NO. 1 THROUGH NO. 52). STALLS DESIGNATED FOR VISITORS SHALL BE CLEARLY LABELED "VISITOR." THE DISTRICT WILL COORDINATE THE EXACT LABELING REQUIREMENTS WITH THE CONTRACTOR DURING CONSTRUCTION. (1)

GENERAL NOTES

1. THE CONTRACTOR SHALL LAY OUT THE WORK, SETTING GRADE STAKES, ESTABLISHING LINES, BASE LINES, ELEVATIONS AND OTHER REFERENCE MARKERS. THE CONTRACTOR SHALL VERIFY THE ACCURACY TO COMPLETE THE WORK THEREOF.
2. ALL PAVEMENT STRIPING IS 4" WHITE PAINT UNLESS OTHERWISE NOTED.
3. ALL STRIPING FOR FIRE AGENCY CONTROL TO COMPLY WITH NFPA 24.

THE FOLLOWING SECTIONS OF THE STANDARD SITE WORK SPECIFICATIONS FOR THE CONSTRUCTION OF THIS PROJECT ARE APPLICABLE TO THE WORK SHOWN ON THIS DRAWING:

SECTION 321723 – PAVEMENT MARKINGS

LEGEND

- SLURRY COAT NEW AND EXISTING AC PAVEMENT PRIOR TO STRIPE
- (1) SLURRY COAT EXISTING WALKWAY AND PAINT EXISTING STAMPED PERIMETER BRICK PATTERN WITH DAVIS COLORS #16, "BRICK RED" (ADMIXTURE COLOR IS FOR REFERENCE ONLY, NOT THE INTENDED PRODUCT; FINAL COLOR SHALL BE DETERMINED BY THE SCHOOL DISTRICT.)

KEY NOTES

1. *ACCESSIBLE PARKING SIGN.*
2. *CROSSWALK: PAINT 12" WHITE STRIPING @ 3' O.C.; SEE PLAN FOR WIDTH.*
3. *PAINT 4" WHITE STRIPING @ 3' O.C.*
4. *PAINT 4" BLUE STRIPING @ 3' O.C.*
5. *PAINT 4" WHITE STRIPE*
6. *PAINT "NO PARKING" USING 12" HIGH STENCIL. COLOR TO MATCH ACCOMPANYING STRIPING.*
7. *ACCESSIBILITY SYMBOL.*
8. *PAINT 4" WHITE STRIPING @ 2' O.C. (EX. SPEED BUMP)*
9. *REPLACE EXISTING SIGN WOODEN POST WITH GALVINIZED STEEL PIPE, PAINTED WHITE.* (1)

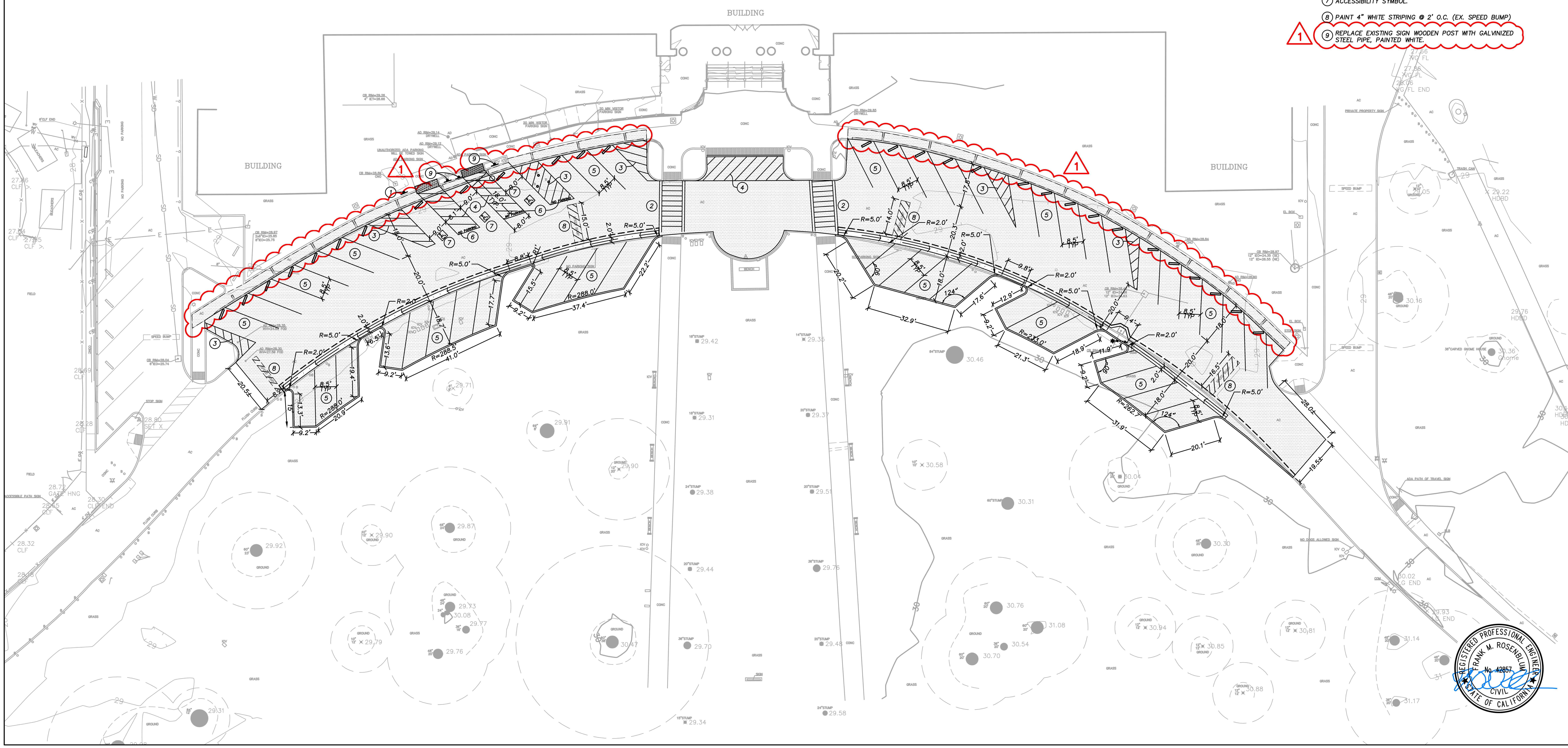

DTA
Dreiling Terrones Architecture Inc.
Architecture
Infrastructure
Environments
1103 Juanita Avenue
Burlingame, California
94010
650 696 1200
314 Center Street #220
Healdsburg, California
95448
707 431 1305

LICENSED ARCHITECT
DANDO M. TERRONES
NO. C 24686
REN. 10/27
STATE OF CALIFORNIA

U&R
UNDERWOOD & ROSENBLUM, INC.
civil engineers and surveyors
1630 Oakland Road Ste. A114 San Jose, Ca. 95131
Tel. No. (408) 453 1222
www.uandr.com

PROJECT NO. J25025 PLOT DATE: 03-05-2026

New Parking at
Burlingame High School
1 Mangini Way
Burlingame, CA 94010

DSA Submittal: 2/19/26
Issued for Bidding: 3/12/26
Bid Addendum: 3/26/26 (1)

REGISTERED PROFESSIONAL ENGINEER
FRANK M. ROSENBLUM
No. 42857
CIVIL
STATE OF CALIFORNIA

SITE SIGNAGE, STRIPING & DIMENSION PLAN

2506

C3.0

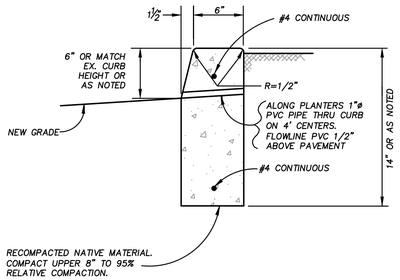

VERTICAL CURB DETAIL | 1

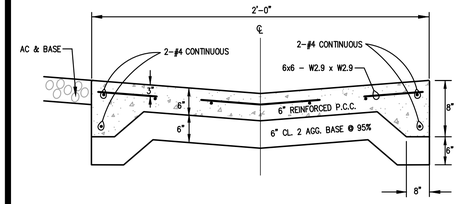

VALLEY GUTTER DETAIL | 2

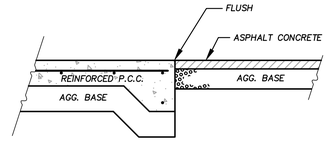

CONCRETE TO ASPHALT TRANSITION | 3

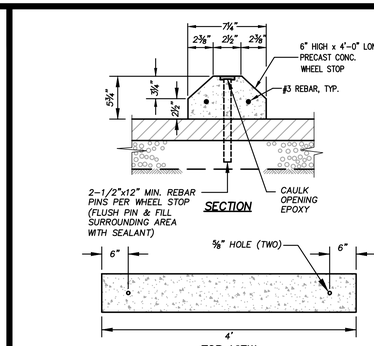

WHEEL STOP DETAIL | 4

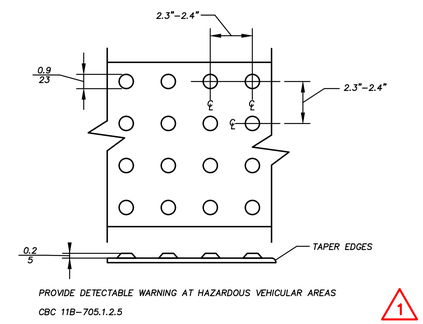

TRUNCATED DOMES DETAIL | 5

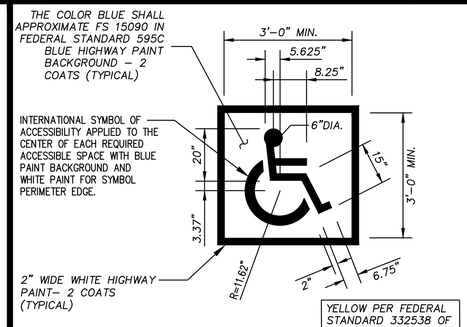

ACCESSIBILITY SYMBOL DETAIL | 6

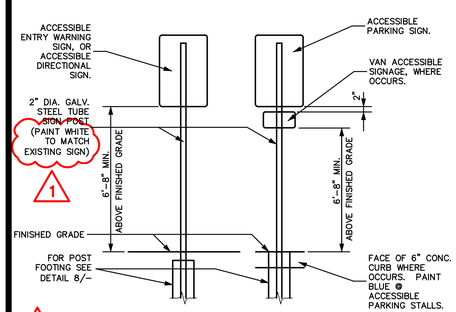

SITE SIGN MOUNTING DETAILS | 7

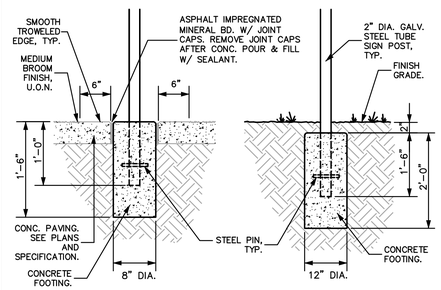

SITE SIGN FOOTING DETAILS | 8

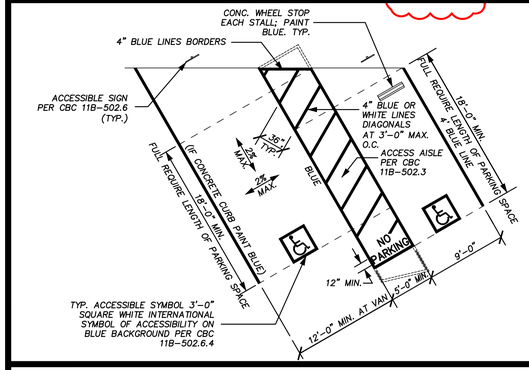

PARKING SPACE LOCATION TO ACCESSIBLE ROUTE

1. ACCESSIBLE ROUTE: PARKING SPACES SHALL BE LOCATED ON THE SHORTEST ACCESSIBLE ROUTE FROM ADJACENT PARKING TO THE ENTRANCE. (CBC 11B-208.3.1)
2. ACCESS AISLES: PARKING SPACES ACCESS AISLE SHALL CONNECTLY TO AN ACCESSIBLE ROUTE. (CBC 11B-502.3)
3. PASSING BY VEHICLES: ACCESSIBLE PARKING SOACES SHALL BE DESIGNED TO SO USERS SHALL NOT BE REQUIRED TO PASS BEHIND PARKED VEHICLES OTHER THAN THEIR OWN. (CBC 11B-502.7.1)

NOTE: VAN PARKING SPACE SHALL BE PERMITTED TO BE 12'-0" WIDE MIN. WHERE THE ACCESS AISLE IS 5'-0" WIDE MIN. (CBC 11B-502.2 EXCEPTION)

ACCESSIBLE PARKING STALL DETAIL | 9

DTA
Drelling Terrones Architecture Inc.
Architecture
Infrastructure
Environments

1103 Juanita Avenue
Burlingame, California
94010
650.696.1200

314 Center Street #220
Healdsburg, California
95448
707.431.1305

LICENSED ARCHITECT
PEDRO M. TERRONES
No. C-29886
REN. 10/27
STATE OF CALIFORNIA

UNDERWOOD & ROSENBLUM, INC.
civil engineers and surveyors
1830 Oakland Road, Ste. A11 • San Jose, Ca. 95131
Tel. No. (408) 453 1222 www.uandr.com

PROJECT NO. J25025 PLOT DATE: 03-05-2026

Burlingame High School
1 Mangini Way
Burlingame, CA 94010

DSA Submittal: 2/19/26
Issued for Bidding: 3/12/26
Bid Addendum: 3/26/26 1

REGISTERED PROFESSIONAL ENGINEER
FRANK M. ROSENBLUM
No. 42857
CIVIL
STATE OF CALIFORNIA

SITE CIVIL DETAILS

2506 C4.0