MERCED CITY
SCHOOL DISTRICT

FREMONT ELEMENTARY SCHOOL
RE-ROOFING PROJECT

PROJECT MANUAL

PROJECT/CONTRACT NUMBER: 2026-1

MERCED CITY SCHOOL DISTRICT

JANUARY 12, 2026

DOCUMENT 00 11 16

NOTICE TO BIDDERS

1. Notice is hereby given that the governing board ("Board") of the **Merced City School District** ("District") will receive sealed bids for the following project, **Fremont Elementary School Re-Roofing Project, Contract No. 2026-01**

2. The Project consists of:

   a. **Fremont Elementary Re-Roofing Project, Contract No.2026-01**

3. To bid on this Project, the Bidder is required to possess one or more of the following State of California contractors' license(s)**:**

   C-39

   The Bidder's license(s) must remain active and in good standing throughout the term of the Contract.

4. To bid on this Project, the Bidder is required to be registered as a public works contractor with the Department of Industrial Relations pursuant to the Labor Code.

5. Contract Documents will be available on or after **March 19, 2026**, for review at the District Facilities Office, and may be downloaded from the District's website, **www.mercedcsd.org,** using the [**"*Facilities Projects and Information*"]** link. In addition, Contract Documents are available for bidders' review at the following builders' exchanges:

   A. Builder's Exchange's of Central California

6. Contract Documents are also available for purchase for _____N/A_____ dollars ($_____) at the District Facilities Office. This fee is refundable if the Contract Documents are returned in clean condition back to the District Facilities Office no later than ten (10) calendar days after the date of the bid opening.

7. Sealed bids will be received until **2:00 p.m., April 16, 2026**, at the District Facilities Office, **2111 Wardrobe Ave. Merced, California 95340** at or after which time the bids will be opened and publicly read aloud. Any bid that is submitted after this time shall be non-responsive and returned to the bidder. Any claim by a bidder of error in its bid must be made in compliance with section 5100 et seq. of the Public Contract Code.

8. Pursuant to Public Contract Code section 20111.5, only prequalified bidders will be eligible to submit a bid for this Project. Any bid submitted by a bidder who is not prequalified shall be non-responsive and returned unopened to the bidder. Contractors shall be pre qualified on the Quality Bidders, **qualitybidders.com**

9. All bids shall be on the form provided by the District. Each bid must conform and be responsive to all pertinent Contract Documents, including, but not limited to, the Instructions to Bidders.

10. A bid bond by an admitted surety insurer on the form provided by the District a cashier's check or a certified check, drawn to the order of the **Merced City School District,** in the amount of ten percent (10%) of the total bid price, shall accompany the Bid Form and Proposal, as a guarantee that the Bidder will, within seven (7) calendar days after the date of the Notice of Award, enter into a contract with the District for the performance of the services as stipulated in the bid.

11. A mandatory pre-bid conference and site visit will be held on **March 31, 2026, at 10:00 a.m. at Fremont Elementary School 2150 S. St. Merced, California**. All participants are required to sign in front of the Office Building. The site visit is expected to take approximately **one hour.** Failure to attend or tardiness will render bid ineligible.

12. The successful Bidder shall be required to furnish a 100% Performance Bond and a 100% Payment Bond if it is awarded the Contract for the Work.

13. The successful Bidder may substitute securities for any monies withheld by the District to ensure performance under the Contract, in accordance with the provisions of section 22300 of the Public Contract Code.

14. The Contractor and all Subcontractors under the Contractor shall pay all workers on all Work performed pursuant to this Contract not less than the general prevailing rate of per diem wages and the general prevailing rate for holiday and overtime work as determined by the Director of the Department of Industrial Relations, State of California, for the type of work performed and the locality in which the work is to be performed within the boundaries of the District, pursuant to section 1770 et seq. of the California Labor Code. Prevailing wage rates are also available from the District or on the Internet at: <http://www.dir.ca.gov>.

15. This Project is subject to labor compliance monitoring and enforcement by the Department of Industrial Relations pursuant to Labor Code section 1771.4 and subject to the requirements of Title 8 of the California Code of Regulations. The successful Bidder shall comply with all requirements of Division 2, Part 7, Chapter 1, Articles 1-5 of the Labor Code.

16. The District's Board has found and determined that the following item(s) shall be used on this Project based on the purpose(s) indicated. (Public Contract Code section 3400(c).) A particular material, product, thing, or service is designated by specific brand or trade name for the following purpose(s):

    (1) In order that a field test or experiment may be made to determine the product's suitability for future use:

    (2) In order to match other products in use on a particular public improvement either completed or in the course of completion:

    (3) In order to obtain a necessary item that is only available from one source:

    (4) In order to respond to an emergency declared by a local agency:

17. The District shall award the Contract, if it awards it at all, to the lowest responsive responsible bidder based on:

    A. The base bid amount

18. The Board reserves the right to reject any and all bids and/or waive any irregularity in any bid received. If the District awards the Contract, the security of unsuccessful bidder(s) shall be returned within sixty (60) days from the time the award is made. Unless otherwise required by law, no bidder may withdraw its bid for ninety (90) days after the date of the bid opening.

19. The Contract is to be completed by August 7, 2026. CONTRACTOR should consult the Agreement Form regarding any milestones and Liquidated Damages.

Advertisment Dates:

First Publication: Thursday March 19, 2026

Second Publication: Thursday March 26, 2026

Bid Date: Thursday April 16, 2026 (2:00 pm)

END OF DOCUMENT

DOCUMENT 00 21 13

INSTRUCTIONS TO BIDDERS

Bidders shall follow the instructions in this document, and shall submit all documents, forms, and information required for consideration of a bid.

Merced City School District ("District") will evaluate information submitted by the apparent low Bidder and, if incomplete or unsatisfactory to District, Bidder's bid may be rejected at the sole discretion of District.

1. Bids are requested for a general construction contract, or work described in general, for the following project ("Project" or "Contract"):

   Fremont Elementary Re-Roofing Project, Contract No.2026-1

2. A Bidder and its subcontractors must possess the appropriate State of California contractors' license and must maintain the license throughout the duration of the project. Bidders must also be registered as a public works contractor with the Department of Industrial Relations pursuant to the Labor Code. Bids submitted by a contractor who is not properly licensed or registered shall be deemed non-responsive and will not be considered.

3. The District has prequalified bidders pursuant to Public Contract Code section 20111.5. Only prequalified bidders will be eligible to submit a bid for this Project. Any bid submitted by a bidder who is not prequalified shall be deemed non-responsive and will not be considered.

4. District will receive sealed bids from bidders as stipulated in the Notice to Bidders.

   a. All bids must be sealed in an envelope, marked with the name and address of the Bidder, name of the Project, the Project Number and/or bid number, and time of bid opening.

   b. Bids must be submitted to the Facilities Office by date and time shown in the Notice to Bidders.

   c. Bids must contain all documents as required herein.

5. Bidders are advised that on the date that bids are opened, telephones will not be available at the District Offices for use by bidders or their representatives.

6. Bids will be opened at or after the time indicated for receipt of bids.

7. Bidders must submit bids on the documents titled Bid Form and Proposal and must submit all other required District forms. Bids not submitted on the District's required forms shall be deemed non-responsive and shall not be considered. Additional sheets required to fully respond to requested information are permissible.

8. Bidders shall not modify the Bid Form and Proposal or qualify their bids. Bidders shall not submit to the District a re-formatted, re-typed, altered, modified, or otherwise recreated version of the Bid Form and Proposal or other District-provided document.

9. Bids shall be clearly written and without erasure or deletions. District reserves the right to reject any bid containing erasures, deletions, or illegible contents.

10. Bidders must supply all information required by each Bid Document. Bids must be full and complete. District reserves the right in its sole discretion to reject any bid as non-responsive as a result of any error or omission in the bid. Bidders must complete and submit all of the following documents with the Bid Form and Proposal:

    a. Bid Form with Addendums Noted

    b. Bid Bond on the District's form, or other security

    c. Designated Subcontractors List

    d. Site Visit Certification, if a site visit was required

    e. Non-Collusion Declaration

11. Bidders must submit with their bids cash, a cashier's check or a certified check payable to District, or a bid bond by an admitted surety insurer of not less than ten percent (10%) of amount of Base Bid, plus all additive alternates ("Bid Bond"). If Bidder chooses to provide a Bid Bond as security, Bidder must use the required form of corporate surety provided by District. The Surety on Bidder's Bid Bond must be an insurer admitted in the State of California and authorized to issue surety bonds in the State of California. Bids submitted without necessary bid security will be deemed non-responsive and will not be considered.

12. If Bidder to whom the Contract is awarded fails or neglects to enter into the Contract and submit required bonds, insurance certificates, and all other required documents, within **SEVEN (7)** calendar days after the date of the Notice of Award, District may deposit Bid Bond, cash, cashier's check, or certified check for collection, and proceeds thereof may be retained by District as liquidated damages for failure of Bidder to enter into Contract, in the sole discretion of District. It is agreed that calculation of damages District may suffer as a result of Bidder's failure to enter into the Contract would be extremely difficult and impractical to determine and that the amount of the Bidder's required bid security shall be the agreed and conclusively presumed amount of damages.

13. Bidders must submit with the bid the Designated Subcontractors List for those subcontractors who will perform any portion of Work, including labor, rendering of service, or specially fabricating and installing a portion of the Work or improvement according to detailed drawings contained in the plans and specifications, in excess of one half of one percent (0.5%) of total bid. Failure to submit this list when required by law shall result in bid being deemed non-responsive and the bid will not be considered.

14. All of the listed subcontractors are required to be registered as a public works contractor with the Department of Industrial Relations pursuant to the Labor Code.

    a. An inadvertent error in listing the California contractor license number on the Designated Subcontractors List shall not be grounds for filing a bid protest or grounds for considering the bid non-responsive if the correct contractor's license number is

submitted to the District within 24 hours after the bid opening and the corrected number corresponds with the submitted name and location for that subcontractor.

b. An inadvertent error listing an unregistered subcontractor shall not be grounds for filing a bid protest or grounds for considering the bid non-responsive provided that any of the following apply:

(1) The subcontractor is registered prior to the bid opening.

(2) The subcontractor is registered and has paid the penalty registration fee within 24 hours after the bid opening.

(3) The subcontractor is replaced by another registered subcontractor pursuant to Public Contract Code section 4107.

15. If a mandatory pre-bid conference and site visit ("Site Visit") is required as referenced in the Notice to Bidders, then Bidders must submit the Site Visit Certification with their Bid. District will transmit to all prospective Bidders of record such Addenda as District in its discretion considers necessary in response to questions arising at the Site Visit. Oral statements shall not be relied upon and will not be binding or legally effective. Addenda issued by the District as a result of the Site Visit, if any, shall constitute the sole and exclusive record and statement of the results of the Site Visit.

16. Bidders shall submit the Non-Collusion Declaration with their bids. Bids submitted without the Non-Collusion Declaration shall be deemed non-responsive and will not be considered.

17. The Contractor and all Subcontractors under the Contractor shall pay all workers on all work performed pursuant to the Contract not less than the general prevailing rate of per diem wages and the general prevailing rate for holiday and overtime work as determined by the Director of the Department of Industrial Relations, State of California, for the type of work performed and the locality in which the work is to be performed within the boundaries of the District, pursuant to sections 1770 et seq. of the California Labor Code. Copies of the general prevailing rates of per diem wages for each craft, classification, or type of worker needed to execute the Contract, as determined by Director of the Department of Industrial Relations, are available upon request at the District's principal office. Prevailing wage rates are also available on the internet at http://www.dir.ca.gov.

18. Submission of bid signifies careful examination of Contract Documents and complete understanding of the nature, extent, project schedule, and location of Work to be performed. Bidders must complete the tasks listed below as a condition to bidding, and submission of a bid shall constitute the Bidder's express representation to District that Bidder has fully completed the following:

a. Bidder has visited the Site, if required, and has examined thoroughly and understood the nature and extent of the Contract Documents, Work, Site, locality, actual conditions, as-built conditions, and all local conditions and federal, state and local laws, and regulations that in any manner may affect cost, progress, performance, or furnishing of Work or that relate to any aspect of the means, methods, techniques, sequences, or procedures of construction to be employed by Bidder and safety precautions and programs incident thereto;

b. Bidder has conducted or obtained and has understood all examinations, investigations, explorations, tests, reports, and studies that pertain to the subsurface conditions, as-built conditions, underground facilities, and all other physical conditions at or contiguous to the Site or otherwise that may affect the cost, progress, performance, or furnishing of Work, as Bidder considers necessary for the performance or furnishing of Work at the Contract Sum, within the Contract Time, and in accordance with the other terms and conditions of Contract Documents, including specifically the provisions of the General Conditions; and no additional examinations, investigations, explorations, tests, reports, studies, or similar information or data are or will be required by Bidder for such purposes;

c. Bidder has correlated its knowledge and the results of all such observations, examinations, investigations, explorations, tests, reports, and studies with the terms and conditions of the Contract Documents;

d. Bidder has given the District prompt written notice of all conflicts, errors, ambiguities, or discrepancies that it has discovered in or among the Contract Documents and the actual conditions, and the written resolution(s) thereof by the District is/are acceptable to Bidder;

e. Bidder has made a complete disclosure in writing to the District of all facts bearing upon any possible interest, direct or indirect, that Bidder believes any representative of the District or other officer or employee of the District presently has or will have in this Contract or in the performance thereof or in any portion of the profits thereof;

f. Bidder must, prior to bidding, perform the work, investigations, research, and analysis required by this document and that Bidder represented in its Bid Form and Proposal and the Agreement that it performed prior to bidding. Contractor under this Contract is charged with all information and knowledge that a reasonable bidder would ascertain from having performed this required work, investigation, research, and analysis. Bid prices must include entire cost of all work "incidental" to completion of the Work.

g. Conditions Shown on the Contract Documents: Information as to underground conditions, as-built conditions, or other conditions or obstructions, indicated in the Contract Documents, e.g., on Drawings or in Specifications, has been obtained with reasonable care, and has been recorded in good faith. However, District only warrants, and Bidder may only rely, on the accuracy of limited types of information.

(1) As to above-ground conditions or as-built conditions shown or indicated in the Contract Documents, there is no warranty, express or implied, or any representation express or implied, that such information is correctly shown or indicated. This information is verifiable by independent investigation and Bidder is required to make such verification as a condition to bidding. In submitting its Bid, Bidder shall rely on the results of its own independent investigation. In submitting its Bid, Bidder shall not rely on District-supplied information regarding above-ground conditions or as-built conditions.

(2) As to any subsurface condition shown or indicated in the Contract Documents, Bidder may rely only upon the general accuracy of actual reported depths, actual reported character of materials, actual reported soil types, actual

reported water conditions, or actual obstructions shown or indicated. District is not responsible for the completeness of such information for bidding or construction; nor is District responsible in any way for any conclusions or opinions that the Bidder has drawn from such information; nor is the District responsible for subsurface conditions that are not specifically shown (for example, District is not responsible for soil conditions in areas contiguous to areas where a subsurface condition is shown).

h. Conditions Shown in Reports and Drawings Supplied for Informational Purposes: Reference is made to the document entitled Geotechnical Data, and the document entitled Existing Conditions, for identification of:

(1) Subsurface Conditions: Those reports of explorations and tests of subsurface conditions at or contiguous to the Site that have been utilized by Architect in preparing the Contract Documents; and

(2) Physical Conditions: Those drawings of physical conditions in or relating to existing surface or subsurface structures at or contiguous to the Site that has been utilized by Architect in preparing the Contract Documents.

(3) These reports and drawings are **not** Contract Documents and, except for any "technical" data regarding subsurface conditions specifically identified in Geotechnical Data and Existing Conditions, and underground facilities data, Bidder may not in any manner rely on the information in these reports and drawings. Subject to the foregoing, Bidder must make its own independent investigation of all conditions affecting the Work and must not rely on information provided by District.

19. Bids shall be based on products and systems specified in Contract Documents or listed by name in Addenda. Whenever in the Specifications any materials, process, or article is indicated or specified by grade, patent, or proprietary name, or by name of manufacturer, that Specification shall be deemed to be followed by the words "or equal." Bidder may, unless otherwise stated, offer any material, process, or article that shall be substantially equal or better in every respect to that so indicated or specified. The District is not responsible and/or liable in any way for a Contractor's damages and/or claims related, in any way, to that Contractor's basing its bid on any requested substitution that the District has not approved in advance and in writing. Contractors and materials suppliers who submit requests for substitutions prior to the award of the Contract must do so in writing and in compliance with Public Contract Code section 3400. All requests must comply with the following:

a. District must receive any notice of request for substitution of a specified item a minimum of **TEN (10)** calendar days prior to bid opening. The Successful Bidder will not be allowed to substitute specified items unless properly noticed.

b. Within 35 days after the date of the Notice of Award, the Successful Bidder shall submit data substantiating the request(s) for all substitution(s) containing sufficient information to assess acceptability of product or system and impact on Project, including, without limitation, the requirements specified in the Special Conditions and the Specifications. Insufficient information shall be grounds for rejection of substitution.

c. Approved substitutions, if any, shall be listed in Addenda. District reserves the right not to act upon submittals of substitutions until after bid opening.

d. Substitutions may be requested after Contract has been awarded only if indicated in and in accordance with requirements specified in the Special Conditions and the Specifications.

20. Bidders may examine any available "as-built" drawings of previous work by giving District reasonable advance notice. District will not be responsible for accuracy of "as-built" drawings. The document entitled Existing Conditions applies to all supplied "as-built" drawings.

21. All questions about the meaning or intent of the Contract Documents are to be directed via email to the District to **Doug Williams**. Interpretations or clarifications considered necessary by the District in response to such questions will be issued in writing by Addenda and emailed, faxed, mailed, or delivered to all parties recorded by the District as having received the Contract Documents or posted on the District's website at **www.mcsdcsd.org.** Questions received less than **SEVEN (7)** calendar days prior to the date for opening bids may not be answered. Only questions answered by formal written Addenda will be binding. Oral and other interpretations or clarifications will be without legal effect.

22. Addenda may also be issued to modify other parts of the Contract Documents as deemed advisable by the District.

23. Each Bidder must acknowledge each Addendum in its Bid Form and Proposal by number or its Bid shall be considered non-responsive. Each Addendum shall be part of the Contract Documents. A complete listing of Addenda may be secured from the District.

24. This Contract may include alternates. Alternates are defined as alternate products, materials, equipment, systems, methods, or major elements of the construction that may, at the District's option and under terms established in the Contract and pursuant to section 20103.8 of the Public Contract Code, be selected for the Work.

25. The District shall award the Contract, if it awards it at all, to the lowest responsive responsible bidder based on the criteria as indicated in the Notice to Bidders. In the event two or more responsible bidders submit identical bids, the District shall select the Bidder to whom to award the Contract by lot.

26. Discrepancies between written words and figures, or words and numerals, will be resolved in favor of figures or numerals.

27. Bidders in contention for contract awards shall be required to attend a Post-Bid interview, which will be set within three (3) calendar days following bid opening. A duly authorized representative of the apparent low bidder is required to attend the Post Bid Interview, in person. The apparent low bidder's authorized representative(s) must have (1) knowledge of how the bid submitted was prepared, (2) the person responsible for supervising performance of the Work, and (3) the authority to bind the apparent low bidder. Failure to attend the Post Bid Interview as scheduled will be considered just cause for the District to reject the Bid as non-responsive.

28. Any bid protest by any Bidder regarding any other bid must be submitted in writing to the District, before 5:00 p.m. of the **THIRD (3rd)** business day following bid opening.

a. Only a Bidder who has actually submitted a bid, and who could be awarded the Contract if the bid protest is upheld, is eligible to submit a bid protest. Subcontractors are not eligible to submit bid protests. A Bidder may not rely on the bid protest submitted by another Bidder.

b. A bid protest must contain a complete statement of any and all bases for the protest and all supporting documentation. Materials submitted after the bid protest deadline will not be considered.

c. The protest must refer to the specific portions of all documents that form the basis for the protest.

(1) Without limitation to any other basis for protest, an inadvertent error in listing the California contractor's license number on the Designated Subcontractors List shall not be grounds for filing a bid protest or grounds for considering the bid non-responsive if the correct contractor's license number is submitted to the District within 24 hours after the bid opening and the corrected number corresponds with the submitted name and location for that subcontractor.

(2) Without limitation to any other basis for protest, an inadvertent error listing an unregistered subcontractor shall not be grounds for filing a bid protest or grounds for considering the bid non-responsive provided that any of the following apply:

(i) The subcontractor is registered prior to the bid opening.

(ii) The subcontractor is registered and has paid the penalty registration fee within 24 hours after the bid opening.

(iii) The subcontractor is replaced by another registered subcontractor pursuant to Public Contract Code section 4107.

d. The protest must include the name, address and telephone number of the person representing the protesting party.

e. The party filing the protest must concurrently transmit a copy of the protest and any attached documentation to all other parties with a direct financial interest that may be adversely affected by the outcome of the protest. Such parties shall include all other bidders or proposers who appear to have a reasonable prospect of receiving an award depending upon the outcome of the protest.

f. The procedure and time limits set forth in this paragraph are mandatory and are each bidder's sole and exclusive remedy in the event of bid protest. Failure to comply with these procedures shall constitute a waiver of any right to further pursue the bid protest, including filing a Government Code Claim or legal proceedings.

29. The Bidder to whom Contract is awarded shall execute and submit the following documents by 5:00 p.m. of the **SEVENTH (7th)** calendar day following the date of the Notice of Award. Failure to properly and timely submit these documents entitles District to reject the bid as non-responsive.

a. Agreement: To be executed by successful Bidder. Submit four (4) copies, each bearing an original signature.

b. Escrow of Bid Documentation: This must include all required documentation. See the document titled Escrow Bid Documentation for more information.

c. Performance Bond (100%): On the form provided in the Contract Documents and fully executed as indicated on the form.

d. Payment Bond (Contractor's Labor and Material Bond) (100%): On the form provided in the Contract Documents and fully executed as indicated on the form.

e. Insurance Certificates and Endorsements as required.

f. Workers' Compensation Certification.

g. Prevailing Wage and Related Labor Requirements Certification

h. Drug-Free Workplace Certification.

i. Tobacco-Free Environment Certification.

j. Drug and Alcohol-Free Schools Certification.

k. Hazardous Materials Certification.

l. Lead-Based Materials Certification.

m. Imported Materials Certification.

n. Criminal Background Investigation/Fingerprinting Certification.

o. Roofing Project Certification: from Contractor

p. Registered Subcontractors List: Must include Department of Industrial Relations (DIR) registration number of each subcontractor for all tiers.

30. Time for Completion: District may issue a Notice to Proceed within **NINETY (90)** days from the date of the Notice of Award. Once Contractor has received the Notice to Proceed, Contractor shall complete the Work within the period of time indicated in the Contract Documents.

a. In the event that the District desires to postpone issuing the Notice to Proceed beyond this 90-day period, it is expressly understood that with reasonable notice to the Contractor, the District may postpone issuing the Notice to Proceed.

b. It is further expressly understood by Contractor that Contractor shall not be entitled to any claim of additional compensation as a result of the postponement of the issuance of the Notice to Proceed beyond a 90-day period. If the Contractor believes that a postponement of issuance of the Notice to Proceed will cause a hardship to the Contractor, the Contractor may terminate the Contract. Contractor's termination due to

a postponement beyond this 90-day period shall be by written notice to District within **TEN (10)** calendar days after receipt by Contractor of District's notice of postponement.

c. It is further understood by the Contractor that in the event that Contractor terminates the Contract as a result of postponement by the District, the District shall only be obligated to pay Contractor for the Work that Contractor had performed at the time of notification of postponement and which the District had in writing authorized Contractor to perform prior to issuing a Notice to Proceed.

d. Should the Contractor terminate the Contract as a result of a notice of postponement, District shall have the authority to award the Contract to the next lowest responsive responsible bidder.

31. District reserves the right to reject any or all bids, including without limitation the right to reject any or all nonconforming, non-responsive, unbalanced, or conditional bids, to re-bid, and to reject the bid of any bidder if District believes that it would not be in the best interest of the District to make an award to that bidder, whether because the bid is not responsive or the bidder is unqualified or of doubtful financial ability or fails to meet any other pertinent standard or criteria established by District. District also reserves the right to waive any inconsequential deviations or irregularities in any bid. For purposes of this paragraph, an “unbalanced bid” is one having nominal prices for some work items and/or enhanced prices for other work items.

32. It is the policy of the District that no qualified person shall be excluded from participating in, be denied the benefits of, or otherwise be subjected to discrimination in any consideration leading to the award of contract, based on race, religious creed, color, national origin, ancestry, physical disability, mental disability, reproductive health decision making, medical condition, genetic information, marital status, sex, gender, gender identity, gender expression, age, sexual orientation, or veteran or military status. The Successful Bidder and its subcontractors shall comply with applicable federal and state laws, including, but not limited to the California Fair Employment and Housing Act, beginning with Government Code section 12900, and Labor Code section 1735.

33. Prior to the award of Contract, District reserves the right to consider the responsibility of the Bidder. District may conduct investigations as District deems necessary to assist in the evaluation of any bid and to establish the responsibility, including, without limitation, qualifications and financial ability of Bidders, proposed subcontractors, suppliers, and other persons and organizations to perform and furnish the Work in accordance with the Contract Documents to District's satisfaction within the prescribed time.

END OF DOCUMENT

DOCUMENT 00 31 19

EXISTING CONDITIONS

1. Summary

This document describes existing conditions at or near the Project, and use of information available regarding existing conditions. This document is **not** part of the Contract Documents. See General Conditions for definition(s) of terms used herein.

2. Reports and Information on Existing Conditions

a. Documents providing a general description of the Site and conditions of the Work may have been collected by the **Merced City School District** ("District"), its consultants, contractors, and tenants. These documents may, but are not required to, include previous contracts, contract specifications, tenant improvement contracts, as-built drawings, utility drawings, and information regarding underground facilities.

b. Information regarding existing conditions may be inspected at the District offices or the Construction Manager's offices, if any, and copies may be obtained at cost of reproduction and handling upon Bidder's agreement to pay for such copies. These reports, documents, and other information are **not** part of the Contract Documents. These reports, documents, and other information do **not** excuse Contractor from fulfilling Contractor's obligation to independently investigate any or all existing conditions or from using reasonable prudent measures to avoid damaging existing improvements.

c. Information regarding existing conditions may also be included in the Project Manual, but shall **not** be considered part of the Contract Documents.

d. Prior to commencing this Work, Contractor and the District's representative shall survey the Site to document the condition of the Site. Contractor will record the survey in digital videotape format and provide an electronic copy to the District within fourteen (14) days of the survey.

e. Contractor may also document any pre-existing conditions in writing, provided that both the Contractor and the District's representative agree on said conditions and sign a memorandum documenting the same.

f. The reports and other data or information regarding existing conditions and underground facilities at or contiguous to the Project are the following:

(1) Original Construction Drawings.
(2) Survey of Site.
(3) Geotechnical Report(s).
(4) Hazardous Material Report(s).
(5) Videotaped Survey(s).

3. Use of Information

a. Information regarding existing conditions was obtained only for use of District and its consultants, contractors, and tenants for planning and design and is **not** part of the Contract Documents.

b. District does not warrant, and makes no representation regarding, the accuracy or thoroughness of any information regarding existing conditions. Bidder represents and agrees that in submitting a bid it is not relying on any information regarding existing conditions supplied by District.

c. Under no circumstances shall District be deemed to warrant or represent existing above-ground conditions, as-built conditions, or other actual conditions, verifiable by independent investigation. These conditions are verifiable by Bidder by the performance of its own independent investigation that Bidder must perform as a condition to bidding and Bidder should not and shall not rely on this information or any other information supplied by District regarding existing conditions.

d. Any information shown or indicated in the reports and other data supplied herein with respect to existing underground facilities at or contiguous to the Project may be based upon information and data furnished to District by the District's employees and/or consultants or builders of such underground facilities or others. District does not assume responsibility for the completeness of this information, and Bidder is solely responsible for any interpretation or conclusion drawn from this information.

e. District shall be responsible only for the general accuracy of information regarding underground facilities, and only for those underground facilities that are owned by District, and only where Bidder has conducted the independent investigation required of it pursuant to the Instructions to Bidders, and discrepancies are not apparent.

4. Investigations/Site Examinations

a. Before submitting a bid, each Bidder is responsible for conducting or obtaining any additional or supplementary examinations, investigations, explorations, tests, studies, and data concerning conditions (surface, subsurface, and underground facilities) at or contiguous to the Site or otherwise, that may affect cost, progress, performance, or furnishing of Work or that relate to any aspect of the means, methods, techniques, sequences, or procedures of construction to be employed by Bidder and safety precautions and programs incident thereto or that Bidder deems necessary to determine its Bid for performing and furnishing the Work in accordance with the time, price, and other terms and conditions of Contract Documents.

b. On request, District will provide each Bidder access to the Site to conduct such examinations, investigations, explorations, tests, and studies, as each Bidder deems necessary for submission of a bid. Bidders must fill all holes and clean up and restore the Site to its former condition upon completion of its explorations, investigations, tests, and studies. Such investigations and Site examinations may be performed during any and all Site visits indicated in the Notice to Bidders and only under the provisions of the Contract Documents, including, but not limited to, proof of insurance and obligation to indemnify against claims arising from such work, and District's prior approval.

END OF DOCUMENT

DOCUMENT 00 41 13

BID FORM AND PROPOSAL

To: Governing Board of the **Merced City School District** ("District" or "Owner")

From: _____
(Proper Name of Bidder)

The undersigned declares that Bidder has read and understands the Contract Documents, including, without limitation, the Notice to Bidders and the Instructions to Bidders, and agrees and proposes to furnish all necessary labor, materials, and equipment to perform and furnish all work in accordance with the terms and conditions of the Contract Documents, including, without limitation, the Drawings and Specifications of **Bid No.2026-1,** for the following project known as:

Fremont Elementary Re-Roofing Project 2026-1

("Project" or "Contract") and will accept in full payment for that Work the following total lump sum amount, all taxes included:

_____ dollars $ _____
TOTAL BASE BID + 10% CONTINGENCY
Bidder acknowledges and agrees that the Base Bid accounts for any and all Allowance(s).

Descriptions of alternates are primarily scope definitions and do not necessarily detail the full range of materials and processes needed to complete the construction.

[REMAINDER OF PAGE INTENTIONALLY LEFT BLANK]

Additional Detail Regarding Calculation of Base Bid

1. **Unit Prices**. The Bidder's Base Bid includes the following unit prices, which the Bidder must provide and the District may, at its discretion, utilize in valuing additive and/or deductive change orders (Unit Prices shall include all labor, materials, services, profit, overhead, insurance, bonds, taxes, and all other incidental costs of Contractor, subcontractors, and suppliers):

SCHEDULE OF UNIT PRICES

Item No.	Description	Unit of Measure	Estimated Quantity	Unit Price	Total Cost = Unit Price x Estimated Quantity (Included in Base Bid)
1	Roof Decking	Sq. Ft.	1	$_____	$_____
2	Fascia Board	Lineal Foot	1	$_____	$_____

Where scope of Work is decreased, all Work pertaining to the item, whether specifically stated or not, shall be omitted, and where scope of Work is increased, all work pertaining to that item required to render same ready for use on the Project in accordance with intentions of the Drawings and Specifications shall be included in the above agreed-upon price amount.

2. **Allowance**. The Bidder's Base Bid shall include the following Allowances for the Tasks/Work as noted here:

Task/Work	**Allowance Value**
Unforeseen Conditions such as Dryrot	10% of the Base Bid Price
Total Allowance / Contingency Value	$

The Allowance Value for an Allowance Item includes the direct cost of labor, materials, equipment, transportation, taxes and insurance associated with the applicable Allowance Item. All other costs, including Contractor's overall project management and general conditions costs, overhead and fee, are deemed to be included in the Base Bid, and are not subject to adjustment regardless of the actual amount of the Allowance Item.

The District shall have sole discretion to authorize all expenditures from the Allowances. The District shall process expenditures from the Allowances in the form of an Allowance Expenditure Directive ("AED"). Any unused Allowance or unused portion thereof shall be deducted from the Contract Price to the benefit of the District.

3. The undersigned has reviewed the Work outlined in the Contract Documents and fully understands the scope of Work required in this Proposal, understands the construction and project management function(s) is described in the Contract Documents, and that each Bidder who is awarded a contract shall be in fact a prime contractor, not a subcontractor, to the District, and agrees that its Proposal, if accepted by the District, will be the basis for the Bidder to enter into a contract with the District in accordance with the intent of the Contract Documents.

4. The undersigned has notified the District in writing of any discrepancies or omissions or of any doubt, questions, or ambiguities about the meaning of any of the Contract Documents and has contacted the Construction Manager before bid date to verify the issuance of any clarifying Addenda.

5. The undersigned agrees to commence work under this Contract on the date established in the Contract Documents and to complete all work within the time specified in the Contract Documents.

6. The liquidated damages clause of the General Conditions and Agreement is hereby acknowledged.

7. It is understood that the District reserves the right to reject this bid and that the bid shall remain open to acceptance and is irrevocable for a period of ninety (90) days.

8. The following documents are attached hereto:

- Bid Bond on the District's form or other security
- Designated Subcontractors List
- Site Visit Certification
- Non-Collusion Declaration

11. Receipt and acceptance of the following Addenda is hereby acknowledged:

No. _____, Dated _____	No. _____, Dated _____
No. _____, Dated _____	No. _____, Dated _____
No. _____, Dated _____	No. _____, Dated _____

12. Bidder acknowledges that the license required for performance of the Work is a **C-39 license**.

13. Bidder hereby certifies that Bidder is able to furnish labor that can work in harmony with all other elements of labor employed or to be employed on the Work.

14. Bidder specifically acknowledges and understands that if it is awarded the Contract, that it shall perform the Work of the Project while complying with all requirements of the Department of Industrial Relations.

15. Bidder hereby certifies that its bid includes sufficient funds to permit Bidder to comply with all local, state or federal labor laws or regulations during the Project, including payment of prevailing wage, and that Bidder will comply with the provisions of Labor Code section 2810(d) if awarded the Contract.

16. Bidder represents that it is competent, knowledgeable, and has special skills with respect to the nature, extent, and inherent conditions of the Work to be performed. Bidder further acknowledges that there are certain peculiar and inherent conditions existent in the construction of the Work that may create, during the Work, unusual or peculiar unsafe conditions hazardous to persons and property.

17. Bidder expressly acknowledges that it is aware of such peculiar risks and that it has the skill and experience to foresee and to adopt protective measures to adequately and safely perform the Work with respect to such hazards.

18. Bidder expressly acknowledges that it is aware that if a false claim is knowingly submitted (as the terms “claim” and “knowingly” are defined in the California False Claims Act, Gov. Code, § 12650 et seq.), the District will be entitled to civil remedies set forth in the California False Claim Act. It may also be considered fraud and the Contractor may be subject to criminal prosecution.

19. The undersigned Bidder certifies that it is, at the time of bidding, and shall be throughout the period of the Contract, licensed by the State of California to do the type of work required under the terms of the Contract Documents and registered as a public works contractor with the Department of Industrial Relations. Bidder further certifies that it is regularly engaged in the general class and type of work called for in the Contract Documents.

[SIGNATURE ON FOLLOWING PAGE]

Bidder hereby certifies to the District that all representations, certifications, and statements made by Bidder, as set forth in this bid form, are true and correct and are made under penalty of perjury.

Dated this _____ day of _____ 20 _____

Name of Bidder: _____

Type of Organization: _____

Signature: _____

Print Name: _____

Title: _____

Address of Bidder: _____

Taxpayer Identification No. of Bidder: _____

Telephone Number: _____

Fax Number: _____

E-mail: _____ Web Page: _____

Contractor's License No(s): No.: _____ Class: _____ Expiration Date: _____

No.: _____ Class:_____ Expiration Date: _____

No.: _____ Class:_____ Expiration Date: _____

Public Works Contractor Registration No.: _____

END OF DOCUMENT

DOCUMENT 00 43 13

BID BOND

(Note: If Bidder is providing a bid bond as its bid security, Bidder must use this form, NOT a surety company form.)

KNOW ALL PERSONS BY THESE PRESENTS:

That the undersigned,_____, as Principal ("Principal"),

and _____, as Surety ("Surety"), a corporation organized and existing under and by virtue of the laws of the State of California and authorized to do business as a surety in the State of California, are held and firmly bound unto the **Merced City School District ("District") of Merced County,** State of California, as Obligee, in an amount equal to ten percent (10%) of the Base Bid plus alternates, in the sum of

_____ Dollars ($ _____)

lawful money of the United States of America, for the payment of which sum well and truly to be made, we, and each of us, bind ourselves, our heirs, executors, administrators, successors, and assigns, jointly and severally, firmly by these presents.

THE CONDITION OF THIS OBLIGATION IS SUCH that whereas the Principal has submitted a bid to the District for all Work specifically described in the accompanying bid for the following project: _____ _____ ("Project" or "Contract").

NOW, THEREFORE, if the Principal is awarded the Contract and, within the time and manner required under the Contract Documents, after the prescribed forms are presented to Principal for signature, enters into a written contract, in the prescribed form in accordance with the bid, and files two bonds, one guaranteeing faithful performance and the other guaranteeing payment for labor and materials as required by law, and meets all other conditions to the Contract between the Principal and the Obligee becoming effective, or if the Principal shall fully reimburse and save harmless the Obligee from any damage sustained by the Obligee through failure of the Principal to enter into the written contract and to file the required performance and labor and material bonds, and to meet all other conditions to the Contract between the Principal and the Obligee becoming effective, then this obligation shall be null and void; otherwise, it shall be and remain in full force and effect. The full payment of the sum stated above shall be due immediately if Principal fails to execute the Contract within seven (7) days of the date of the District's Notice of Award to Principal.

Surety, for value received, hereby stipulates and agrees that no change, extension of time, alteration or addition to the terms of the Contract or the call for bids, or to the work to be performed thereunder, or the specifications accompanying the same, shall in any way affect its obligation under this bond, and it does hereby waive notice of any such change, extension of time, alteration or addition to the terms of the Contract or the call for bids, or to the work, or to the specifications.

In the event suit is brought upon this bond by the Obligee and judgment is recovered, the Surety shall pay all costs incurred by the Obligee in such suit, including a reasonable attorneys' fee to be fixed by the Court.

If the District awards the bid, the security of unsuccessful bidder(s) shall be returned within sixty (60) days from the time the award is made. Unless otherwise required by law, no bidder may withdraw its bid for ninety (90) days after the date of the bid opening.

IN WITNESS WHEREOF, this instrument has been duty executed by the Principal and Surety above named, on the _____ day of _____, 20___.

_____
Principal

_____
By

_____
Surety

_____
By

_____
Name of California Agent of Surety

_____
Address of California Agent of Surety

_____
Telephone Number of California Agent of Surety

Bidder must attach Power of Attorney and Certificate of Authority for Surety and a Notarial Acknowledgment for all Surety's signatures. The California Department of Insurance must authorize the Surety to be an admitted Surety Insurer.

END OF DOCUMENT

DOCUMENT 00 43 36

DESIGNATED SUBCONTRACTORS LIST
(Public Contact Code Sections 4100-4114)

PROJECT:_____

Bidder acknowledges and agrees that it must clearly set forth below the name, location and California contractor license number of each subcontractor who will perform work or labor or render service to the Bidder in or about the construction of the Work or who will specially fabricate and install a portion of the Work according to detailed drawings contained in the plans and specifications in an amount in excess of one-half of one percent (0.5%) of Bidder's total Base Bid and the kind of Work that each will perform. Vendors or suppliers of materials only do not need to be listed.

Bidder acknowledges and agrees that, if Bidder fails to list as to any portion of Work, or if Bidder lists more than one subcontractor to perform the same portion of Work, Bidder must perform that portion itself or be subjected to penalty under applicable law. In case more than one subcontractor is named for the same kind of Work, state the portion of the kind of Work that each subcontractor will perform.

If alternate bid(s) is/are called for and Bidder intends to use subcontractors different from or in addition to those subcontractors listed for work under the Base Bid, Bidder must list subcontractors that will perform Work in an amount in excess of one half of one percent (0.5%) of Bidder's total Base Bid plus alternate(s).

If further space is required for the list of proposed subcontractors, attach additional copies of page 2 showing the required information, as indicated below.

Subcontractor Name: _____

CA Cont. Lic. #: _____ Location: _____

DIR Registration #: _____

Portion of Work: _____

Subcontractor Name: _____

CA Cont. Lic. #: _____ Location: _____

DIR Registration #: _____

Portion of Work: _____

Subcontractor Name: _____

CA Cont. Lic. #: _____ Location: _____

DIR Registration #: _____

Portion of Work: _____

Subcontractor Name: _____

CA Cont. Lic. #: _____ Location: _____

DIR Registration #: _____

Portion of Work: _____

Subcontractor Name: _____

CA Cont. Lic. #: _____ Location: _____

DIR Registration #: _____

Portion of Work: _____

Subcontractor Name: _____

CA Cont. Lic. #: _____ Location: _____

DIR Registration #: _____

Portion of Work: _____

Subcontractor Name: _____

CA Cont. Lic. #: _____ Location: _____

DIR Registration #: _____

Portion of Work: _____

Subcontractor Name: _____

CA Cont. Lic. #: _____ Location: _____

DIR Registration #: _____

Portion of Work: _____

Date: _____

Proper Name of Bidder: _____

Signature: _____

Print Name: _____

Title: _____

END OF DOCUMENT

DOCUMENT 00 45 01

SITE VISIT CERTIFICATION

TO BE EXECUTED BY BIDDER AND SUBMITTED WITH BID
IF SITE VISIT WAS MANDATORY

PROJECT: _____

Check option that applies:

_____ I certify that I visited the Site of the proposed Work, received the attached _____ pages of information, and became fully acquainted with the conditions relating to construction and labor. I fully understand the facilities, difficulties, and restrictions attending the execution of the Work under contract.

_____ I certify that _____ (Bidder's representative) visited the Site of the proposed Work, received the attached _____ pages of information, and became fully acquainted with the conditions relating to construction and labor. The Bidder's representative fully understood the facilities, difficulties, and restrictions attending the execution of the Work under contract.

Bidder fully indemnifies the **Merced City School District,** its Architect, its Engineers, its Construction Manager, and all of their respective officers, agents, employees, and consultants from any damage, or omissions, related to conditions that could have been identified during my visit and/or the Bidder's representative's visit to the Site.

I certify under penalty of perjury under the laws of the State of California that the foregoing is true and correct.

Date: _____

Proper Name of Bidder: _____

Signature: _____

Print Name: _____

Title: _____

ATTACHMENTS:

1.

2.

3.

END OF DOCUMENT

DOCUMENT 00 45 19

NON-COLLUSION DECLARATION
(Public Contract Code Section 7106)

The undersigned declares:

I am the _____ of _____, the party making the foregoing bid.
[Title] [Name of Firm]

The bid is not made in the interest of, or on behalf of, any undisclosed person, partnership, company, association, organization, or corporation. The bid is genuine and not collusive or sham. The bidder has not directly or indirectly induced or solicited any other bidder to put in a false or sham bid. The bidder has not directly or indirectly colluded, conspired, connived, or agreed with any bidder or anyone else to put in a sham bid, or to refrain from bidding. The bidder has not in any manner, directly or indirectly, sought by agreement, communication, or conference with anyone to fix the bid price of the bidder or any other bidder, or to fix any overhead, profit, or cost element of the bid price, or of that of any other bidder. All statements contained in the bid are true. The bidder has not, directly or indirectly, submitted his or her bid price or any breakdown thereof, or the contents thereof, or divulged information or data relative thereto, to any corporation, partnership, company, association, organization, bid depository, or to any member or agent thereof, to effectuate a collusive or sham bid, and has not paid, and will not pay, any person or entity for such purpose.

Any person executing this declaration on behalf of a bidder that is a corporation, partnership, joint venture, limited liability company, limited liability partnership, or any other entity, hereby represents that he or she has full power to execute, and does execute, this declaration on behalf of the bidder.

I declare under penalty of perjury under the laws of the State of California that the foregoing is true and correct and that this declaration is executed on _____,
[Date]

at _____, _____.
[City] [State]

Date: _____

Proper Name of Bidder: _____

Signature: _____

Print Name: _____

Title: _____

END OF DOCUMENT

DOCUMENT 00 45 26

WORKERS' COMPENSATION CERTIFICATION

PROJECT/CONTRACT NO.: _____ between the **Merced City School District** ("District") and _____ ("Contractor" or "Bidder") ("Contract" or "Project").

Labor Code section 3700, in relevant part, provides:

> Every employer except the State shall secure the payment of compensation in one or more of the following ways:
>
> a. By being insured against liability to pay compensation by one or more insurers duly authorized to write compensation insurance in this state; and/or
>
> b. By securing from the Director of Industrial Relations a certificate of consent to self-insure, which may be given upon furnishing proof satisfactory to the Director of Industrial Relations of ability to self-insure and to pay any compensation that may become due to his employees.

I am aware of the provisions of section 3700 of the Labor Code which require every employer to be insured against liability for workers' compensation or to undertake self-insurance in accordance with the provisions of that code, and I will comply with such provisions before commencing the performance of the Work of this Contract.

Date: _____

Proper Name of Contractor: _____

Signature: _____

Print Name: _____

Title: _____

(In accordance with Labor Code sections 1860 and 1861, the above certificate must be signed and filed with the awarding body prior to performing any Work under this Contract.)

END OF DOCUMENT

DOCUMENT 00 45 46.01

PREVAILING WAGE AND
RELATED LABOR REQUIREMENTS CERTIFICATION

PROJECT/CONTRACT NO.: _____ between the **Merced City School District** ("District") and _____ ("Contractor" or "Bidder") ("Contract" or "Project").

I hereby certify that I will conform to the State of California Public Works Contract requirements regarding prevailing wages, benefits, on-site audits with 48-hours' notice, payroll records, and apprentice and trainee employment requirements, for all Work on the above Project including, without limitation, labor compliance monitoring and enforcement by the Department of Industrial Relations.

Date: _____

Proper Name of Contractor: _____

Signature: _____

Print Name: _____

Title: _____

END OF DOCUMENT

DOCUMENT 00 45 46.03

DRUG-FREE WORKPLACE CERTIFICATION

PROJECT/CONTRACT NO.: _____ between the **Merced City School District** ("District") and _____ ("Contractor" or "Bidder") ("Contract" or "Project").

This Drug-Free Workplace Certification form is required from the successful Bidder pursuant to Government Code section 8350 et seq., the Drug-Free Workplace Act of 1990. The Drug-Free Workplace Act of 1990 requires that every person or organization awarded a contract or grant for the procurement of any property or service from any state agency must certify that it will provide a drug-free workplace by doing certain specified acts. In addition, the Act provides that each contract or grant awarded by a state agency may be subject to suspension of payments or termination of the contract or grant, and the contractor or grantee may be subject to debarment from future contracting, if the contracting agency determines that specified acts have occurred.

The District is not a "state agency" as defined in the applicable section(s) of the Government Code, but the District is a local agency and public school district under California law and requires all contractors on District projects to comply with the provisions and requirements of the Drug-Free Workplace Act of 1990.

Contractor must also comply with the provisions of Health & Safety Code section 11362.3 which prohibits the consumption or possession of cannabis or cannabis products in any public place, including school grounds, and specifically on school grounds while children are present.

Contractor shall certify that it will provide a drug-free workplace by doing all of the following:

a. Publishing a statement notifying employees that the unlawful manufacture, distribution, dispensation, possession, or use of a controlled substance is prohibited in the person's or organization's workplace and specifying actions which will be taken against employees for violations of the prohibition.

b. Establishing a drug-free awareness program to inform employees about all of the following:

   (1) The dangers of drug abuse in the workplace.

   (2) The person's or organization's policy of maintaining a drug-free workplace.

   (3) The availability of drug counseling, rehabilitation, and employee-assistance programs.

   (4) The penalties that may be imposed upon employees for drug abuse violations.

c. Requiring that each employee engaged in the performance of the contract or grant be given a copy of the statement required above, and that, as a condition of employment on the contract or grant, the employee agrees to abide by the terms of the statement.

I, the undersigned, agree to fulfill the terms and requirements of Government Code section 8355 listed above and will publish a statement notifying employees concerning (a) the prohibition of controlled substance at the workplace, (b) establishing a drug-free awareness program, and (c) requiring that each employee engaged in the performance of the Contract be given a copy of the statement required by section 8355(a), and requiring that the employee agree to abide by the terms of that statement.

I also understand that if the District determines that I have either (a) made a false certification herein, or (b) violated this certification by failing to carry out the requirements of section 8355, that the Contract awarded herein is subject to termination, suspension of payments, or both. I further understand that, should I violate the terms of the Drug-Free Workplace Act of 1990, I may be subject to debarment in accordance with the requirements of the aforementioned Act.

I acknowledge that I am aware of the provisions of and hereby certify that I will adhere to the requirements of the Drug-Free Workplace Act of 1990 and Health and Safety Code section 11362.3.

Date: _____

Proper Name of Contractor: _____

Signature: _____

Print Name: _____

Title: _____

END OF DOCUMENT

DOCUMENT 00 45 46.08

CRIMINAL BACKGROUND INVESTIGATION/
FINGERPRINTING CERTIFICATION

PROJECT/CONTRACT NO.: _____between the **Merced City School District** ("District") and _____ ("Contractor" or "Bidder") ("Contract" or "Project").

The undersigned does hereby certify to the District that I am a representative of the Contractor currently under contract with the District; that I am familiar with the facts herein certified; and that I am authorized and qualified to execute this certificate on behalf of Contractor.

Contractor certifies that it has taken at least one of the following actions (check all that apply):

☐ Pursuant to Education Code section 45125.2(a), Contractor has installed or will install, prior to commencement of Work, a physical barrier at the Work Site, that will limit contact between Contractor's employees, Subcontractors or suppliers and District pupils at all times; and/or

☐ Pursuant to Education Code section 45125.2(a), Contractor certifies that all employees will be under the continual supervision of, and monitored by, an employee of the Contractor who the California Department of Justice ("DOJ") has ascertained, or as described below, will ascertain, has not been convicted of a violent or serious felony. The name and title of the employee who will be supervising Contractor's and its subcontractors' or suppliers' employees is:

Name: _____

Title: _____

NOTE: If Contractor is a sole proprietor, and elects the above option, Contractor must have the above-named employee's fingerprints prepared and submitted by District for submission to the DOJ, in accordance with Education Code section 45125.1(h). No work shall commence until such determination by DOJ has been made.

☐ Pursuant to Education Code section 45125.2(a), the District will take appropriate steps to protect the safety of any pupils that may come in contact with Contractor's employees, subcontractors or suppliers so that the fingerprinting and criminal background investigation requirements of Education Code section 45125.2 shall not apply to Contractor under the Contract.

☐ The Work on the Contract is either (i) at an unoccupied school site and no employee of Contractor and/or subcontractor or supplier of any tier of the Contract shall come in contact with the District pupils or (ii) if Contractor's employees or any subcontractor or supplier of any tier of the Contract interacts with pupils, such interaction shall only take place under the immediate supervision and control of the pupil's parent or guardian or a school employee, so that the fingerprinting and criminal background investigation requirements of Education Code section 45125.1 shall not apply to Contractor under the Contract.

☐ The Contractor, who is not a sole proprietor, has complied with the fingerprinting requirements of Education Code section 45125.1 with respect to all Contractor's employees and all of its Subcontractors' employees who may have contact with District pupils in the course of providing services pursuant to the Contract, and the DOJ has determined (A) that none of those employees has been convicted of a felony, as that term is defined in Education Code section 45122.1 and/or (B) that the prohibition does not apply to an employee as provided by Education Code section 45125.1(e)(2) or (3). When the Contractor performs the criminal background check, it shall immediately provide any subsequent arrest and conviction information it receives to the District pursuant to the subsequent arrest service. No work shall commence until the Department of Justice ascertains that Contractor's employees and any subcontractors' employees have not been convicted of a felony as defined in Education Code Section 45122.1.

A complete and accurate list of Contractor's employees and of all of its subcontractors' employees who may come in contact with District pupils during the course and scope of the Contract is attached hereto as ATTACHMENT "A;" and/or

☐ The Contractor is a sole proprietor and intends to comply with the fingerprinting requirements of Education Code section 45125.1(h) with respect to all Contractor's employees who may have contact with District pupils in the course of providing services pursuant to the Contract, and hereby agrees to the District's preparation and submission of fingerprints such that the DOJ may determine (A) that none of those employees has been convicted of a felony, as that term is defined in Education Code section 45122.1 and/or (B) that the prohibition does not apply to an employee as provided by Education Code section 45125.1(e)(2) or (3). No work shall commence until the Department of Justice ascertains that Contractor's employees and any subcontractors' employees have not been convicted of a felony as defined in Education Code Section 45122.1.

Contractor's responsibility for background clearance extends to all of its employees, Subcontractors or suppliers, and employees of Subcontractors or suppliers coming into contact with District pupils regardless of whether they are designated as employees or acting as independent contractors of the Contractor.

Date: _____

Proper Name of Contractor: _____

Signature: _____

Print Name: _____

Title: _____

[CONTINUED ON NEXT PAGE]

ATTACHMENT "A"

List of Employees/Subcontractors

Name/Company: _____

Name/Company: _____

Name/Company: _____

Name/Company: _____

Name/Company: _____

Name/Company: _____

Name/Company: _____

Name/Company: _____

Name/Company: _____

Name/Company: _____

Name/Company: _____

Name/Company: _____

Name/Company: _____

Name/Company: _____

Name/Company: _____

Name/Company: _____

Name/Company: _____

Name/Company: _____

Name/Company: _____

Name/Company: _____

Name/Company: _____

Name/Company: _____

If further space is required for the list of employees/subcontractors, attach additional copies of this page.

END OF DOCUMENT

DOCUMENT 00 45 46.10

ROOFING PROJECT CERTIFICATION

PROJECT/CONTRACT NO.: _____ between the **Merced City School District** ("District") and _____ ("Contractor" or "Bidder") ("Contract" or "Project").

Pursuant to Public Contract Code section 3000, et seq. this form shall be executed by all contractors, materials manufacturers, or vendors involved in a bid or proposal for the repair or replacement of a roof of a public school building where the project is either for repair of more than 25% of the roof or that has a total cost more than $21,000 ("roofing project") and submitted to the District when the award is made.

Certification of: □ Contractor □ Materials Manufacturer
□ Vendor □ Other _____

I, _____, _____, certify that I have not
[Name] [Name of Firm]
offered, given, or agreed to give, received, accepted, or agreed to accept, any gift, contribution, or any financial incentive whatsoever to or from any person in connection with the roofing project contract. As used in this certification, "person" means any natural person, business, partnership, corporation, union, committee, club, or other organization, entity, or group of individuals.

Furthermore, I, _____, _____, certify that
[Name] [Name of Firm]
I do not have, and throughout the duration of the contract, I will not have, any financial relationship in connection with the performance of this contract with any architect, engineer, roofing consultant, materials manufacturer, distributor, or vendor that is not disclosed below.

I, _____, _____, have the following
[Name] [Name of Firm]
financial relationships with an architect, engineer, roofing consultant, materials manufacturer, distributor, or vendor, or other person in connection with the following roofing project contract (provide Name and Address of Building, and Contract Date and Number):

_____

_____

_____

_____

_____

_____

_____

By my signature below, I hereby certify that, to the best of my knowledge, the contents of this disclosure are true, or are believed to be true. I further certify on behalf of the Firm that I am aware of section 3000 et seq. of the California Public Contract Code, and the sections referenced therein regarding the penalties for providing false information or failing to disclose a financial relationship in this disclosure. I further certify that I am authorized to make this certification on behalf of the Firm.

Date: _____

Proper Name of Firm: _____

Signature: _____

Print Name: _____

Title: _____

END OF DOCUMENT

DOCUMENT 00 52 13

AGREEMENT

THIS AGREEMENT IS MADE AND ENTERED INTO THIS _____ DAY OF _____, 20___, by and between the **Merced City School District** ("District") and _____ _____ ("Contractor") ("Agreement").

WITNESSETH: That the parties hereto have mutually covenanted and agreed, and by these presents do covenant and agree with each other, as follows:

1. **The Work**: Contractor agrees to furnish all tools, equipment, apparatus, facilities, labor, and material necessary to perform and complete in a good and workmanlike manner, the work of the following project:

   _____

   ("Project" or "Contract" or "Work")

   It is understood and agreed that the Work shall be performed and completed as required in the Contract Documents including, without limitation, the Drawings and Specifications and submission of all documents required to secure funding or by the Division of the State Architect for close-out of the Project, under the direction and supervision of, and subject to the approval of, the District or its authorized representative.

2. **The Contract Documents**: The complete Contract consists of all Contract Documents as defined in the General Conditions and incorporated herein by this reference. Any and all obligations of the District and Contractor are fully set forth and described in the Contract Documents. All Contract Documents are intended to cooperate so that any Work called for in one and not mentioned in the other or vice versa is to be executed the same as if mentioned in all Contract Documents.

3. **Interpretation of Contract Documents**: Should any question arise concerning the intent or meaning of Contract Documents, including the Drawings or Specifications, the question shall be submitted to the District for interpretation. If a conflict exists in the Contract Documents, valid, written modifications, beginning with the most recent, shall control over this Agreement (if any), which shall control over the Special Conditions, which shall control over any Supplemental Conditions, which shall control over the General Conditions, which shall control over the remaining Division 0 documents, which shall control over Division 1 Documents which shall control over Division 2 through Division 49 documents, which shall control over figured dimensions, which shall control over large-scale drawings, which shall control over small-scale drawings. In the case of a discrepancy or ambiguity solely between and among the Drawings and Specifications, the discrepancy or ambiguity shall be resolved in favor of the interpretation that will provide District with the functionally complete and operable Project described in the Drawings and Specifications. In no case shall a document calling for lower quality and/or quantity material or workmanship control. The decision of the District in the matter shall be final.

4. **Time for Completion**: It is hereby understood and agreed that the Work under this Contract shall be completed within _____ (_____) consecutive calendar days ("Contract Time") from the date specified in the District's Notice to Proceed.

5. **Completion - Extension of Time**: Should the Contractor fail to complete this Contract, and the Work provided herein, within the time fixed for completion, due allowance being made for the contingencies provided for herein, the Contractor shall become liable to the District for all loss and damage that the District may suffer on account thereof. The Contractor shall coordinate its Work with the Work of all other contractors. The District shall not be liable for delays resulting from Contractor's failure to coordinate its Work with other contractors in a manner that will allow timely completion of Contractor's Work. Contractor shall be liable for delays to other contractors caused by Contractor's failure to coordinate its Work with the Work of other contractors.

6. **Liquidated Damages**: Time is of the essence for all work under this Agreement. It is hereby understood and agreed that it is and will be difficult and/or impossible to ascertain and determine the actual damage that the District will sustain in the event of and by reason of Contractor's delay; therefore, Contractor agrees that it shall pay to the District the sum of One Thousand dollars ($1,000.00) per day as liquidated damages for each and every day's delay beyond the time herein prescribed in completion of the Work.

   It is hereby understood and agreed that this amount is not a penalty.

   In the event that any portion of the liquidated damages is not paid to the District, the District may deduct that amount from any money due or that may become due the Contractor under this Agreement, and such deduction does not constitute a withholding or penalty. The District's right to assess liquidated damages is as indicated herein and in the General Conditions.

   The time during which the Contract is delayed for cause, as hereinafter specified, may extend the time of completion for a reasonable time as the District may grant, provided that Contractor has complied with the claims procedure of the Contract Documents. This provision does not exclude the recovery of damages by either party under other provisions in the Contract Documents.

7. **Loss Or Damage**: The District and its agents and authorized representatives shall not in any way or manner be answerable or suffer loss, damage, expense, or liability for any loss or damage that may happen to the Work, or any part thereof, or in or about the same during its construction and before acceptance, and the Contractor shall assume all liabilities of every kind or nature arising from the Work, either by accident, negligence, theft, vandalism, or any cause whatsoever; and shall hold the District and its agents and authorized representatives harmless from all liability of every kind and nature arising from accident, negligence, or any cause whatsoever.

8. **Limitation Of District Liability:** District's financial obligations under this Contract shall be limited to the payment of the compensation provided in this Contract. Notwithstanding any other provision of this Contract, in no event shall District be liable, regardless of whether any claim is based on contract or tort, for any special, consequential, indirect or incidental damages, including, but not limited to, lost profits or revenue, lost bonding capacity, arising out of or in connection with this Contract for the services performed in connection with this Contract.

9. **Insurance and Bonds**: Prior to issuance of the Notice to Proceed by the District, Contractor shall provide all required certificates of insurance, insurance endorsements, and payment and performance bonds as evidence thereof.

10. **Prosecution of Work**: If the Contractor should neglect to prosecute the Work properly or fail to perform any provisions of this Contract, the District, may, pursuant to the General Conditions and without prejudice to any other remedy it may have, make good such deficiencies and may deduct the cost thereof from the payment then or thereafter due the Contractor.

11. **Authority of Architect, Project Inspector, and DSA**: Contractor hereby acknowledges that the Architect(s), the Project Inspector(s), and the Division of the State Architect ("DSA") have authority to approve and/or suspend Work if the Contractor's Work does not comply with the requirements of the Contract Documents, Title 24 of the California Code of Regulations, and all applicable laws and regulations. The Contractor shall be liable for any delay caused by its non-compliant Work.

12. **Assignment of Contract**: Neither the Contract, nor any part thereof, nor any moneys due or to become due thereunder, may be assigned by the Contractor without the prior written approval of the District, nor without the written consent of the Surety on the Contractor's Performance Bond (the "Surety"), unless the Surety has waived in writing its right to notice of assignment.

13. **Classification of Contractor's License**: Contractor hereby acknowledges that it currently holds valid Type **C-39** Contractor's license(s) issued by the State of California, Contractors' State License Board, in accordance with division 3, chapter 9, of the Business and Professions Code and in the classification called for in the Contract Documents.

14. **Registration as Public Works Contractor**: The Contractor and all Subcontractors currently are registered as public works contractors with the Department of Industrial Relations, State of California, in accordance with Labor Code section 1771.1.

15. **Payment of Prevailing Wages**: The Contractor and all Subcontractors shall pay all workers on all Work performed pursuant to this Contract not less than the general prevailing rate of per diem wages and the general prevailing rate for holiday and overtime work as determined by the Director of the Department of Industrial Relations, State of California, for the type of work performed and the locality in which the work is to be performed within the boundaries of the District, pursuant to sections 1770 et seq. of the California Labor Code.

16. **Labor Compliance Monitoring and Enforcement**: This Project is subject to labor compliance monitoring and enforcement by the Department of Industrial Relations pursuant to Labor Code section 1771.4 and Title 8 of the California Code of Regulations. Contractor specifically acknowledges and understands that it shall perform the Work of this Agreement while complying with all the applicable provisions of Division 2, Part 7, Chapter 1, of the Labor Code, including, without limitation, the requirement that the Contractor and all of its Subcontractors shall timely submit complete and accurate electronic certified payroll records as required by the Contract Documents, or the District may not issue payment.

17. **Contract Price**: In consideration of the foregoing covenants, promises, and agreements on the part of the Contractor, and the strict and literal fulfillment of each and every covenant, promise, and agreement, and as compensation agreed upon for the Work and construction, erection, and completion as aforesaid, the District covenants, promises, and agrees that it will well and truly

pay and cause to be paid to the Contractor in full, and as the full Contract Price and compensation for construction, erection, and completion of the Work hereinabove agreed to be performed by the Contractor, the following price:

_____ Dollars

($_____),

in lawful money of the United States, which sum is to be paid according to the schedule provided by the Contractor and accepted by the District and subject to additions and deductions as provided in the Contract. This amount supersedes any previously stated and/or agreed to amount(s). Contract Price includes Allowance(s), if any.

18. **No Representations:** No representations have been made other than as set forth in writing in the Contract Documents, including this Agreement. Each of the Parties to this Agreement warrants that it has carefully read and understood the terms and conditions of this Agreement and all Contract Documents, and that it has not relied upon the representations or advice of any other Party or any attorney not its own.

19. **Entire Agreement:** The Contract Documents, including this Agreement, set forth the entire agreement between the parties hereto and fully supersede any and all prior agreements, understandings, written or oral, between the parties hereto pertaining to the subject matter thereof.

20. **Severability**: If any term, covenant, condition, or provision in any of the Contract Documents is held by a court of competent jurisdiction to be invalid, void or unenforceable, the remainder of the provisions in the Contract Documents shall remain in full force and effect and shall in no way be affected, impaired, or invalidated thereby.

21. **Authority of Signatories**: Each party has the full power and authority to enter into and perform this Contract, and the person signing this Contract on behalf of each party has been properly authorized and empowered to enter into this Contract. This Contract may be executed in one or more counterparts, each of which shall be deemed an original. For this Agreement, and for all Contract Documents requiring a signature, a facsimile or electronic signature shall be deemed to be the equivalent of the actual original signature. All counterparts so executed shall constitute one Contract binding all the Parties hereto.

[SIGNATURES ON FOLLOWING PAGE]

IN WITNESS WHEREOF, accepted and agreed on the date indicated above:

[CONTRACTOR NAME]	**MERCED CITY SCHOOL DISTRICT**
_____	_____
By: _____	By: _
Title: _____	Title: _____

NOTE: If the party executing this Contract is a corporation, a certified copy of the by-laws, or of the resolution of the Board of Directors, authorizing the officers of said corporation to execute the Contract and the bonds required thereby must be attached hereto.

END OF DOCUMENT

DOCUMENT 00 61 13.13

PERFORMANCE BOND
(100% of Contract Price)

(Note: Contractor must use this form, NOT a surety company form.)

KNOW ALL PERSONS BY THESE PRESENTS:

WHEREAS, the governing board ("Board") of the **Merced City School District**, ("District") and _____ _____ ("Principal") have entered into a contract for the furnishing of all materials and labor, services and transportation, necessary, convenient, and proper to perform the following project:

_____

("Project" or "Contract") which Contract dated _____, 20___, and all of the Contract Documents attached to or forming a part of the Contract, are hereby referred to and made a part hereof; and

WHEREAS, said Principal is required under the terms of the Contract to furnish a bond for the faithful performance of the Contract.

NOW, THEREFORE, the Principal and _____ _____ ("Surety") are held and firmly bound unto the Board of the District in the penal sum of

_____

Dollars ($_____), lawful money of the United States, for the payment of which sum well and truly to be made we bind ourselves, our heirs, executors, administrators, successors, and assigns jointly and severally, firmly by these presents, to:

- Promptly perform all the work required to complete the Project; and

- Pay to the District all damages the District incurs as a result of the Principal's failure to perform all the Work required to complete the Project.

Or, at the District's sole discretion and election, the Surety shall obtain a bid or bids for completing the Contract in accordance with its terms and conditions, and upon determination by the District of the lowest responsible bidder, arrange for a contract between such bidder and the District and make available as Work progresses sufficient funds to pay the cost of completion less the "balance of the Contract Price," and to pay and perform all obligations of Principals under the Contract, including, without limitation, all obligations with respect to warranties, guarantees and the payment of liquidated damages. The term "balance of the Contract Price," as used in this paragraph, shall mean the total amount payable to Principal by the District under the Contract and any modifications thereto, less the amount previously paid by the District to the Principal, less any withholdings by the District allowed under the Contract. District shall not be required or obligated to accept a tender of a completion contractor from the Surety for any or no reason.

The condition of the obligation is such that, if the above bound Principal, its heirs, executors, administrators, successors, or assigns, shall in all things stand to and abide by, and well and truly keep and perform the covenants, conditions, and agreements in the Contract and any alteration thereof made as therein provided, on its part to be

kept and performed at the time and in the intent and meaning, including all contractual guarantees and warrantees of materials and workmanship, and shall indemnify and save harmless the District, its trustees, officers and agents, as therein stipulated, then this obligation shall become null and void, otherwise it shall be and remain in full force and virtue.

Surety expressly agrees that the District may reject any contractor or subcontractor proposed by Surety to fulfill its obligations in the event of default by the Principal. Surety shall not utilize Principal in completing the Work nor shall Surety accept a Bid from Principal for completion of the Work if the District declares the Principal to be in default and notifies Surety of the District's objection to Principal's further participation in the completion of the Work.

As a condition precedent to the satisfactory completion of the Contract, the above obligation shall hold good for a period equal to the warranty and/or guarantee period of the Contract, during which time Surety's obligation shall continue if Contractor shall fail to make full, complete, and satisfactory repair and replacements and totally protect the District from loss or damage resulting from or caused by defective materials or faulty workmanship. The obligations of Surety hereunder shall continue so long as any obligation of Contractor remains. Nothing herein shall limit the District's rights or the Contractor or Surety's obligations under the Contract, law or equity, including, but not limited to, California Code of Civil Procedure section 337.15.

The Surety, for value received, hereby stipulates and agrees that no change, extension of time, alteration, or addition to the terms of the contract or to the work to be performed thereunder or the specifications accompanying the same shall in any way affect its obligation on this bond. The Surety also stipulates and agrees that it shall not be exonerated or released from the obligation of this bond by any overpayment or underpayment by the District that is based upon estimates approved by the Architect. The Surety does hereby waive notice of any such change, extension of time, alteration, or addition to the terms of the Contract or to the work or to the specifications.

IN WITNESS WHEREOF, two (2) identical counterparts of this instrument, each of which shall for all purposes be deemed an original thereof, have been duly executed by the Principal and Surety above named, on the _____ day of _____, 20___.

Principal	Surety
By	By
	Name of California Agent of Surety
	Address of California Agent of Surety
	Telephone No. of California Agent of Surety

Contractor must attach a Notarial Acknowledgment for all Surety's signatures and a Power of Attorney and Certificate of Authority for Surety. The California Department of Insurance must authorize the Surety to be an admitted surety insurer.

END OF DOCUMENT

DOCUMENT 00 61 13.16

PAYMENT BOND
Contractor's Labor & Material Bond
(100% Of Contract Price)

(Note: Contractor must use this form, NOT a surety company form.)

KNOW ALL PERSONS BY THESE PRESENTS:

WHEREAS, the governing board ("Board") of the **Merced City School District**, ("District") and _____ _____, ("Principal") have entered into a contract for the furnishing of all materials and labor, services and transportation, necessary, convenient, and proper to perform the following project:

_____

("Project" or "Contract") which Contract dated _____, 20___, and all of the Contract Documents attached to or forming a part of the Contract, are hereby referred to and made a part hereof; and

WHEREAS, pursuant to law and the Contract, the Principal is required, before entering upon the performance of the work, to file a good and sufficient bond with the body by which the Contract is awarded in an amount equal to one hundred percent (100%) of the Contract price, to secure the claims to which reference is made in sections 9000 through 9510 and 9550 through 9566 of the Civil Code, and division 2, part 7, of the Labor Code.

NOW, THEREFORE, the Principal and_____ _____ ("Surety") are held and firmly bound unto all laborers, material men, and other persons referred to in said statutes in the sum of _____ _____ Dollars ($_____), lawful money of the United States, being a sum not less than the total amount payable by the terms of Contract, for the payment of which sum well and truly to be made, we bind ourselves, our heirs, executors, administrators, successors, or assigns, jointly and severally, by these presents.

The condition of this obligation is that if the Principal or any of its subcontractors, or their heirs, executors, administrators, successors, or assigns of any, all, or either of them shall fail to pay for any labor, materials, provisions, or other supplies, used in, upon, for or about the performance of the work contracted to be done, or for any work or labor thereon of any kind, or for amounts required to be deducted, withheld, and paid over to the Employment Development Department from the wages of employees of the Principal or any of his or its subcontractors of any tier under Section 13020 of the Unemployment Insurance Code with respect to such work or labor, that the Surety will pay the same in an amount not exceeding the amount herein above set forth, and also in case suit is brought upon this bond, will pay a reasonable attorney's fee to be awarded and fixed by the court, and to be taxed as costs and to be included in the judgment therein rendered.

It is hereby expressly stipulated and agreed that this bond shall inure to the benefit of any and all persons, companies, and corporations entitled to file claims under section 9100 of the Civil Code, so as to give a right of action to them or their assigns in any suit brought upon this bond.

Should the condition of this bond be fully performed, then this obligation shall become null and void; otherwise it shall be and remain in full force and affect.

And the Surety, for value received, hereby stipulates and agrees that no change, extension of time, alteration, or addition to the terms of Contract or the specifications accompanying the same shall in any manner affect its obligations on this bond, and it does hereby waive notice of any such change, extension, alteration, or addition.

IN WITNESS WHEREOF, two (2) identical counterparts of this instrument, each of which shall for all purposes be deemed an original thereof, have been duly executed by the Principal and Surety above named, on the _____ day of _____, 20___.

Principal	Surety
By	By
	Name of California Agent of Surety
	Address of California Agent of Surety
	Telephone No. of California Agent of Surety

Contractor must attach a Notarial Acknowledgment for all Surety's signatures and a Power of Attorney and Certificate of Authority for Surety. The California Department of Insurance must authorize the Surety to be an admitted surety insurer.

END OF DOCUMENT

DOCUMENT 00 63 57

PROPOSED CHANGE ORDER FORM

Merced City School District

PCO NO.:

Project: _____
Bid No.: _____
RFI #:_____

Date: _____
DSA File No.: _____
DSA Appl. No.:_____

Contractor hereby submits for District's review and evaluation this Proposed Change Order ("PCO"), submitted in accordance with and subject to the terms of the Contract Documents, including Sections 17.7 and 17.8 of the General Conditions. Any spaces left blank below are deemed no change to cost or time.

Contractor understands and acknowledges that documentation supporting Contractor's PCO must be attached and included for District review and evaluation. Contractor further understands and acknowledges that failure to include documentation sufficient to, in District's discretion, support some or all of the PCO, shall result in a rejected PCO.

	WORK PERFORMED OTHER THAN BY CONTRACTOR	**ADD**	**DEDUCT**
	Material (attach suppliers' invoice or itemized quantity and unit cost plus sales tax)		
	Add Labor (attach itemized hours and rates, fully Burdened, and specify the hourly rate for each additional labor burden, for example, payroll taxes, fringe benefits, etc.)		
	Add Equipment (attach suppliers' invoice)		
	Subtotal		
	Add overhead and profit for any and all tiers of Subcontractor, the total not to exceed ten percent (10%) of Item (d)		
	Subtotal		
	Add General Conditions (if Time is Compensable) (attach supporting documentation)		
	Subtotal		
	Add Overhead and Profit for Contractor, not to exceed five percent (5%) of Item (h)		
	Subtotal		

	Add Bond and Insurance, not to exceed two percent (2%) of Item (j)		
	TOTAL		
	Time (zero unless indicated; "TBD" not permitted)	**____ Calendar Days**	

[REMAINDER OF PAGE LEFT BLANK INTENTIONALLY]

	WORK PERFORMED BY CONTRACTOR	**ADD**	**DEDUCT**
	Material (attach itemized quantity and unit cost plus sales tax)		
	Add Labor (attach itemized hours and rates, fully Burdened, and specify the hourly rate for each additional labor burden, for example, payroll taxes, fringe benefits, etc.)		
	Add Equipment (attach suppliers' invoice)		
	Add General Conditions (if Time is Compensable) (attach supporting documentation)		
	Subtotal		
	Add Overhead and Profit for Contractor, not to exceed fifteen percent (15%) of Item (e)		
	Subtotal		
	Add Bond and Insurance, not to exceed two percent (2%) of Item (g)		
	TOTAL		
	Time (zero unless indicated; "TBD" not permitted)	**____ Calendar Days**	

The undersigned Contractor approves the foregoing as to the changes, if any, to the Contract Price specified for each item, and as to the extension of time allowed, if any, for completion of the entire Work as stated herein, and agrees to furnish all labor, materials, and service, and perform all work necessary to complete any additional work specified for the consideration stated herein. Submission of sums which have no basis in fact or which Contractor knows are false are at the sole risk of Contractor and may be a violation of the False Claims Act set forth under Government Code section 12650 et seq. It is understood that the changes herein to the Contract shall only be effective when approved by the governing board of the District.

It is expressly understood that the value of the extra Work or changes expressly includes any and all of the Contractor's costs and expenses, direct and indirect, resulting from additional time required on the Project or resulting from delay to the Project including, without limitation, cumulative impacts. Contractor is not entitled to separately recover amounts for overhead or other indirect costs. Any costs, expenses, damages, or time extensions not included are deemed waived.

SUBMITTED BY:

Contractor:

_____ _____

[Name] Date

END OF DOCUMENT

DOCUMENT 00 63 63

CHANGE ORDER FORM

Merced City School District

CHANGE ORDER NO.:

CHANGE ORDER

Project: _____
Bid No.: _____

Date: _____
DSA File No.: _____
DSA Appl. No.:_____

The following parties agree to the terms of this Change Order:

Owner: _____
[Name / Address]
_____
_____

Contractor: _____
[Name / Address]
_____
_____

Architect: _____
[Name / Address]
_____
_____

Project Inspector: _____
[Name / Address]
_____
_____

Reference	**Description**	**Cost**	**Days Ext.**
PCO # Requested by: Performed by: Reason:	[Description of change] [Requester] [Performer] [Reason]	$	
PCO # Requested by: Performed by: Reason:	[Description of change] [Requester] [Performer] [Reason]	$	
PCO # Requested by: Performed by: Reason:	[Description of change] [Requester] [Performer] [Reason]	$	

Contract time will be adjusted as follows:

Original Contract Amount: $

Previous Completion Date: [Date]

Amount of Previously Approved Change Order(s): $

[#] Calendar Days Extension (zero

_____ [__] Calendar Days Extension (zero unless otherwise indicated)

Current Completion Date: ___[Date]

Amount of this Change Order: $

Contract Amount: $

The undersigned Contractor approves the foregoing as to the changes, if any, to the Contract Price specified for each item, and as to the extension of time allowed, if any, for completion of the entire work as stated therein, and agrees to furnish all labor, materials and services and perform all work necessary to complete any additional work specified for the consideration stated therein. Submission of sums which have no basis in fact or which Contractor knows are false are at the sole risk of Contractor and may be a violation of the False Claims Act set forth under Government Code section 12650 et seq.

This change order is subject to approval by the governing board of this District and must be signed by the District. Until such time as this change order is approved by the District's governing board and executed by a duly authorized District representative, this change order is not effective and not binding.

It is expressly understood that the compensation and time, if any, granted herein represent a full accord and satisfaction for any and all time and cost impacts of the items herein, and Contractor waives any and all further compensation or time extension based on the items herein. The value of the extra work or changes expressly includes any and all of the Contractor's costs and expenses, and its subcontractors, both direct and indirect, resulting from additional time required on the project or resulting from delay to the project including without limitation, cumulative impacts. Any costs, expenses, damages or time extensions not included are deemed waived.

Signatures:

District:		Contractor:	
_____	_____	_____	_____
[Name]	Date	[Name]	Date
Architect:		Project Inspector:	
_____	_____	_____	_____
[Name]	Date	[Name]	Date

END OF DOCUMENT

DOCUMENT 00 65 19.26

AGREEMENT AND RELEASE OF ANY AND ALL CLAIMS

THIS AGREEMENT AND RELEASE OF CLAIMS ("Agreement and Release") IS MADE AND ENTERED INTO THIS _____ DAY OF _____, 20___ by and between the **MERCED CITY SCHOOL DISTRICT** ("District") and _____ ("Contractor"), whose place of business is _____.

RECITALS

WHEREAS, District and Contractor entered into PROJECT/CONTRACT NO.: _____ ("Contract" or "Project") in the **County of Merced,** California; and

WHEREAS, the Work under the Contract was completed on _____, and a Notice of Completion was recorded with the County Recorder on _____.

NOW, THEREFORE, it is mutually agreed between District and Contractor as follows:

AGREEMENT AND RELEASE

1. Contractor will only be assessed liquidated damages as detailed below:

   Original Contract Sum $_____

   Modified Contract Sum $_____

   Payment to Date $_____

   Liquidated Damages $_____

   Payment Due Contractor $_____

2. Subject to the provisions hereof, District shall forthwith pay to Contractor the undisputed sum of _____ Dollars ($_____) under the Contract, less any amounts represented by any notice to withhold funds on file with District as of the date of such payment.

3. Contractor acknowledges and hereby agrees that there are no unresolved or outstanding claims in dispute against District arising from the performance of work under the Contract, except for the claims described in Paragraph 4 and continuing obligations described in Paragraph 6. It is the intention of the parties in executing this Agreement and Release that this Agreement and Release shall be effective as a full, final and general release of all claims, demands, actions, causes of action, obligations, costs, expenses, damages, losses and liabilities of Contractor against District and all of its respective agents, employees, trustees, inspectors, assignees, consultants and transferees, except for any Disputed Claim that may be set forth in Paragraph 4 and the continuing obligations described in Paragraph 6 hereof.

4. The following claims are disputed (hereinafter, the "Disputed Claims") and are specifically excluded from the operation of this Agreement and Release:

Claim No.	Description of Claim	Amount of Claim	Date Claim Submitted
_____	_____	$_____	_____
_____	_____	$_____	_____
_____	_____	$_____	_____
_____	_____	$_____	_____
_____	_____	$_____	_____
_____	_____	$_____	_____

[If further space is required, attach additional sheets showing the required information.]

5. Consistent with California Public Contract Code section 7100, Contractor hereby agrees that, in consideration of the payment set forth in Paragraph 2 hereof, Contractor hereby releases and forever discharges District, all its agents, employees, inspectors, assignees, and transferees from any and all liability, claims, demands, actions, or causes of action of whatever kind or nature arising out of or in any way concerned with the Work under the Contract.

6. Guarantees and warranties for the Work, and any other continuing obligation of Contractor, including without limitation, the duty to defend, indemnify and hold harmless the District, shall remain in full force and effect as specified in the Contract Documents.

7. Contractor hereby waives the provisions of California Civil Code section 1542 which provides as follows:

> A GENERAL RELEASE DOES NOT EXTEND TO CLAIMS THAT THE CREDITOR OR RELEASING PARTY DOES NOT KNOW OR SUSPECT TO EXIST IN HIS OR HER FAVOR AT THE TIME OF EXECUTING THE RELEASE AND THAT, IF KNOWN BY HIM OR HER, WOULD HAVE MATERIALLY AFFECTED HIS OR HER SETTLEMENT WITH THE DEBTOR OR RELEASED PARTY.

8. The provisions of this Agreement and Release are contractual in nature and not mere recitals and shall be considered independent and severable. If any such provision or any part thereof shall be at any time held invalid in whole or in part under any federal, state, county, municipal, or other law, ruling, or regulations, then such provision, or part thereof, shall remain in force and effect to the extent permitted by law, and the remaining provisions of this Agreement and Release shall also remain in full force and effect, and shall be enforceable.

9. All rights of District shall survive completion of the Work or termination of Contract, and execution of this Release.

* * * CAUTION: THIS IS A RELEASE - READ BEFORE EXECUTING * * *

MERCED CITY SCHOOL DISTRICT

Signature: _____

Print Name: _____

Title: _____

CONTRACTOR: _____

Signature: _____

Print Name: _____

Title: _____

END OF DOCUMENT

DOCUMENT 00 65 36

GUARANTEE FORM

_____ ("Contractor") hereby agrees that the _____ ("Work" of Contractor) which Contractor has installed for the **Merced City School District** ("District") for the following project:

PROJECT:_____

("Project" or "Contract") has been performed in accordance with the requirements of the Contract Documents and that the Work as installed will fulfill the requirements of the Contract Documents.

The undersigned agrees to repair or replace any or all of such Work that may prove to be defective in workmanship or material together with any other adjacent Work that may be displaced in connection with such replacement within a period of Five (5) year(s) from the date of completion as defined in Public Contract Code section 7107, subdivision (c), ordinary wear and tear and unusual abuse or neglect excepted. The date of completion is _____, 20___.

In the event of the undersigned's failure to comply with the above-mentioned conditions within a reasonable period of time, as determined by the District, but not later than seven (7) days after being notified in writing by the District, the undersigned authorizes the District to proceed to have said defects repaired and made good at the expense of the undersigned. The undersigned shall pay the costs and charges therefor upon demand.

Date: _____

Proper Name of Contractor: _____

Signature: _____

Print Name: _____

Title: _____

Representatives to be contacted for service subject to terms of Contract:

Name: _____

Address: _____

Phone No.: _____

Email: _____

END OF DOCUMENT

DOCUMENT 00 72 13

TABLE OF CONTENTS

Page

1. CONTRACT TERMS AND DEFINITIONS i
   - 1.1. Definitions i
   - 1.2. Laws Concerning the Contract; Venue vi
   - 1.3. No Oral Agreements vii
   - 1.4. No Assignment vii
   - 1.5. Notice and Service Thereof vii
   - 1.6. No Waiver vii
   - 1.7. Substitutions for Specified Items viii
   - 1.8. Materials and Work viii
2. [RESERVED] ix
3. ARCHITECT ix
4. CONSTRUCTION MANAGER x
5. INSPECTOR, INSPECTIONS, AND TESTS x
   - 5.1. Project Inspector x
   - 5.2. Tests and Inspections xi
   - 5.3. Costs for After Hours and/or Off Site Inspections xii
6. CONTRACTOR xii
   - 6.1. Status of Contractor xii
   - 6.2. Project Inspection Card(s) xiii
   - 6.3. Contractor's Supervision xiii
   - 6.4. Duty to Provide Fit Workers xiv
   - 6.5. Field Office xiv
   - 6.6. Purchase of Materials and Equipment xiv

6.7. Documents on Work....xiv
6.8. Preservation of Records....xv
6.9. Integration of Work....xvi
6.10. Notifications....xvi
6.11. Obtaining of Permits, Licenses and Registrations....xvii
6.12. Royalties and Patents....xvii
6.13. Work to Comply With Applicable Laws and Regulations....xviii
6.14. Safety/Protection of Persons and Property....xix
6.15. Working Evenings and Weekends....xxi
6.16. Cleaning Up....xxi
6.17. No Relief from Obligations Based on Review by Other Persons....xxii
7. SUBCONTRACTORS....xxii
8. OTHER CONTRACTS/CONTRACTORS....xxiii
9. DRAWINGS AND SPECIFICATIONS....xxiv
10. CONTRACTOR'S SUBMITTALS AND SCHEDULES....xxv
10.1. Schedule of Work, Schedule of Submittals, and Schedule of Values....xxv
10.2. Monthly Progress Schedule(s)....xxviii
10.3. Material Safety Data Sheets (MSDS)....xxix
10.4. Submittals....xxix
11. SITE ACCESS, CONDITIONS, AND REQUIREMENTS....xxix
11.1. Site Investigation....xxix
11.2. Soils Investigation Report....xxix
11.3. Access to Work....xxx
11.4. Layout and Field Engineering....xxx
11.5. Utilities....xxx
11.6. Sanitary Facilities....xxx
11.7. Surveys....xxxi

11.8. Regional Notification Center xxxi
11.9. Existing Utility Lines xxxi
11.10. Notification xxxii
11.11. Hazardous Materials xxxii
11.12. No Signs xxxii
12. TRENCHES xxxii
12.1. Trenches Greater Than Five Feet xxxii
12.2. Excavation Safety xxxii
12.3. No Tort Liability of District xxxii
12.4. No Excavation without Permits xxxii
12.5. Discovery of Hazardous Waste and/or Unusual Conditions xxxiii
13. INSURANCE AND BONDS xxxiii
13.1. Insurance xxxiii
13.2. Contract Security - Bonds xxxviii
14. WARRANTY/GUARANTEE/INDEMNITY xxxix
14.1. Warranty/Guarantee xxxix
14.2. Indemnity and Defense xxxix
15. TIME xli
15.1. Notice to Proceed xli
15.2. Computation of Time / Adverse Weather xlii
15.3. Hours of Work xlii
15.4. Progress and Completion xliii
15.5. Schedule xliii
15.6. Expeditious Completion xliii
16. EXTENSIONS OF TIME – LIQUIDATED DAMAGES xliii
16.1. Liquidated Damages xliii
16.2. Excusable Delay xliv

16.3. No Additional Compensation for Delays Within Contractor's Control xlv

16.4. Force Majeure xlvi

16.5. Float or Slack in the Schedule.....xlvii

17. CHANGES IN THE WORK xlvii

17.1. No Changes Without Authorization xlvii

17.2. Architect Authority xlviii

17.3. Price Request.....xlviii

17.4. Change Orders.....xlviii

17.5. Proposed Change Order.....xlix

17.7. Change Order Certification.....liv

17.8. Determination of Change Order Cost.....liv

17.9. Deductive Change Orders.....lv

17.10. Addition or Deletion of Alternate Bid Item(s).....lv

17.11. Discounts, Rebates, and Refunds.....lv

17.12. Construction Change Directives.....lv

17.13. Force Account Directives lvi

17.14. Accounting Records.....lvii

17.15. Notice Required.....lvii

17.16. Applicability to Subcontractors.....lvii

17.17. Alteration to Change Order Language lvii

17.18. Failure of Contractor to Execute Change Order.....lvii

18. REQUEST FOR INFORMATION.....lviii

19. PAYMENTS.....lviii

19.1. Contract Price.....lviii

19.2. Applications for Progress Payments lviii

19.3. Progress Payments lxi

19.4. Decisions to Withhold Payment.....lxii

19.5. Subcontractor Payments lxv

20. COMPLETION OF THE WORK lxv

20.1. Completion lxv

20.2. Close-Out/Certification Procedures lxvi

20.3. Final Inspection lxvii

20.4. Costs of Multiple Inspections lxix

20.5. Partial Occupancy or Use Prior to Completion lxix

21. FINAL PAYMENT AND RETENTION lxix

21.1. Final Payment lxix

21.2. Prerequisites for Final Payment lxx

21.3. Retention lxx

21.4. Substitution of Securities lxxi

22. UNCOVERING OF WORK lxxi

23. NONCONFORMING WORK AND CORRECTION OF WORK lxxi

23.1. Nonconforming Work lxxi

23.2. Correction of Work lxxi

23.3. District's Right to Perform Work lxxii

24. TERMINATION AND SUSPENSION lxxii

24.1. District’s Request for Assurances lxxii

24.2. District's Right to Terminate Contractor for Cause lxxiii

24.3. Termination of Contractor for Convenience lxxv

24.4. Effect of Termination lxxv

24.5. Emergency Termination of Public Contracts Act of 1949 lxxvi

24.6. Suspension of Work lxxvii

25. CLAIMS PROCESS lxxvii

25.1. Obligation to File Claims for Disputes lxxvii

25.2. Duty to Perform during Claim Process lxxvii

25.3. Definition of Claim lxxviii

25.4. Claims Presentation lxxviii

25.5. Claim Resolution pursuant to Public Contract Code section 9204 lxxix

25.6. Subcontractor Pass-Through Claims lxxxi

25.7. Government Code Claim Act Claim lxxxi

25.8. Claim Resolution pursuant to Public Contract Code section 20104 et seq..... lxxxi

25.9. Claim Procedure Compliance lxxxiii

25.10. Claim Resolution Non-Applicability lxxxiii

25.11. Attorney's Fees lxxxiv

26. STATE LABOR, WAGE & HOUR, APPRENTICE, AND RELATED PROVISIONS lxxxiv

26.1. Labor Compliance and Enforcement lxxxiv

26.2. Wage Rates, Travel, and Subsistence.....lxxxiv

26.3. Hours of Work.....lxxxv

26.4. Payroll Records lxxxvi

26.5. [RESERVED] lxxxvii

26.6. Apprentices.....lxxxvii

26.7. Non-Discrimination.....lxxxviii

26.8. Labor First Aid lxxxix

27. [RESERVED] lxxxix

28. MISCELLANEOUS lxxxix

28.1. Assignment of Antitrust Actions lxxxix

28.2. Excise Taxes xc

28.3. Taxes.....xc

28.4. Shipments.....xc

28.5. Compliance with Government Reporting Requirements xc

DOCUMENT 00 72 13

GENERAL CONDITIONS

1. CONTRACT TERMS AND DEFINITIONS

1.1. Definitions

Wherever used in the Contract Documents, the following terms shall have the meanings indicated, which shall be applicable to both the singular and plural thereof:

1.1.1. **Adverse Weather**: Shall be only weather that satisfies all of the following conditions: (1) unusually severe precipitation, sleet, snow, hail, or extreme temperature conditions in excess of the norm for the location and time of year it occurred based on the closest weather station data averaged over the past five years, (2) that is unanticipated and would cause unsafe work conditions and/or is unsuitable for scheduled work that should not be performed during inclement weather (i.e., exterior finishes), and (3) at the Project.

1.1.2. **Allowance(s):** The Allowance Item(s) identified in the Bid Form and Proposal and included in the Contract Price. Any unused portion of the Allowance will revert to the District documented by a deductive Change Order. Contractor hereby authorizes the District to execute a unilateral deductive Change Order at or near the end of the Project for all or any portion of the Allowance not allocated.

1.1.3. **Allowance Expenditure Directive:** Written authorization for expenditure of an Allowance, if any. Contractor shall not bill for or be due any portion of an Allowance unless the District has identified specific work, Contractor has submitted a price for that work or the District has proposed a price for that work, the District has accepted the cost for that work, and the District has executed an Allowance Expenditure Directive incorporating that work.

1.1.4. **Approval, Approved, and/or Accepted**: Written authorization, unless stated otherwise.

1.1.5. **Architect (or "Design Professional in General Responsible Charge")**: The individual, partnership, corporation, joint venture, or any combination thereof, named as Architect, who will have the rights and authority assigned to the Architect in the Contract Documents. The term Architect means the Design Professional in General Responsible Charge as defined in DSA PR 13-02 on this Project or the Architect's authorized representative.

1.1.6. **As-Builts**: Reproducible blue line prints of drawings to be prepared on a monthly basis pursuant to the Contract Documents, that reflect changes made during the performance of the Work, recording differences between the original design of the Work and the Work as constructed since the preceding monthly submittal. See **Record Drawings**.

1.1.7. **Bidder**: A contractor who intends to provide a proposal to the District to perform the Work of this Contract.

1.1.8. **Burdened**: The labor rate for Contractor or any Subcontractor inclusive of any and all burden costs including, but not limited to, health and welfare pay, vacation and holiday pay, pension contributions, training rates, benefits of any kind, insurance of any kind, workers' compensation, liability insurance, truck expenses, supply expenses of any kind, payroll taxes, and any other taxes of any kind.

1.1.9. **Change Order**: A written order to the Contractor authorizing an addition to, deletion from, or revision in the Work, and/or authorizing an adjustment in the Contract Price or Contract Time.

1.1.10. **Claim**: A Contractor Claim within the meaning of Public Contract Code sections 9204 and/or 20104 et seq.

1.1.11. **Construction Change Directive**: A written order prepared and issued by the District, the Construction Manager, and/or the Architect and signed by the District and the Architect, directing a change in the Work.

1.1.12. **Construction Manager**: The individual, partnership, corporation, joint venture, or any combination thereof, or its authorized representative, named as such by the District. If no Construction Manager is used on the Project that is the subject of this Contract, then all references to Construction Manager herein shall be read to refer to District.

1.1.13. **Construction Schedule**: The progress schedule of construction of the Project as provided by Contractor and approved by District.

1.1.14. **Contract, Contract Documents**: The Contract consists exclusively of the documents evidencing the agreement of the District and Contractor, identified as the Contract Documents. The Contract Documents consist of the following documents:

1.1.14.1. Notice to Bidders
1.1.14.2. Instructions to Bidders
1.1.14.3. Bid Form and Proposal
1.1.14.4. Bid Bond
1.1.14.5. Designated Subcontractors List
1.1.14.6. Site Visit Certification (if a site visit was required)
1.1.14.7. Non-Collusion Declaration
1.1.14.8. Off-Road Diesel-Fueled Fleet Certification (if applicable)
1.1.14.9. Notice of Award
1.1.14.10. Notice to Proceed
1.1.14.11. Agreement
1.1.14.12. Escrow of Bid Documentation
1.1.14.13. Escrow Agreement for Security Deposits in Lieu of Retention (if applicable)
1.1.14.14. Performance Bond
1.1.14.15. Payment Bond (Contractor's Labor & Material Bond)
1.1.14.16. General Conditions
1.1.14.17. Special Conditions (if applicable)
1.1.14.18. Project Labor Agreement (if applicable)
1.1.14.19. Hazardous Materials Procedures and Requirements
1.1.14.20. Workers' Compensation Certification
1.1.14.21. Prevailing Wage Certification

1.1.14.22. Disabled Veteran Business Enterprise Participation Certification (if applicable)
1.1.14.23. Drug-Free Workplace Certification (if applicable)
1.1.14.24. Tobacco-Free Environment Certification (if applicable)
1.1.14.25. Drug and Alcohol-Free Schools Certification (if applicable)
1.1.14.26. Hazardous Materials Certification (if applicable)
1.1.14.27. Lead-Based Materials Certification (if applicable)
1.1.14.28. Imported Materials Certification (if applicable)
1.1.14.29. Criminal Background Investigation/Fingerprinting Certification
1.1.14.30. Roofing Project Certification (if applicable)
1.1.14.31. Registered Subcontractors List
1.1.14.32. Iran Contracting Act Certification (if applicable)
1.1.14.33. Federal Debarment Certification (if applicable)
1.1.14.34. Federal Byrd Anti-Lobbying Certification (if applicable)
1.1.14.35. Post Bid Interview (if used)
1.1.14.36. All Plans, Technical Specifications, and Drawings
1.1.14.37. Any and all addenda to any of the above documents
1.1.14.38. Any and all change orders or written modifications to the above documents if approved in writing by the District

1.1.15. **Contract Price**: The total monies payable to the Contractor under the terms and conditions of the Contract Documents.

1.1.16. **Contract Time**: The time period stated in the Agreement for the completion of the Work.

1.1.17. **Contractor**: The person or persons identified in the Agreement as contracting to perform the Work to be done under this Contract, or the legal representative of such a person or persons.

1.1.18. **Daily Job Report(s)**: Daily Project reports prepared by the Contractor's employee(s) who are present on Site, which shall include the information required herein.

1.1.19. **Day(s)**: Unless otherwise designated, day(s) means calendar day(s).

1.1.20. **Department of Industrial Relations (or "DIR")**: is responsible, among other things, for labor compliance monitoring and enforcement of California prevailing wage laws and regulations for public works contracts.

1.1.21. Design Professional in General Responsible Charge: See definition of **Architect** above.

1.1.22. **Dispute**: A separate demand by Contractor for a time extension, or payment of money or damages arising from Work done by or on behalf of the Contractor pursuant to the Contract and payment of which is not otherwise expressly provided for or Contractor is not otherwise entitled to; or an amount of payment disputed by the District.

1.1.23. **District**: The public agency or the school district for which the Work is performed. The governing board of the District or its designees will act for the District in all matters pertaining to the Contract. The District may, at any time,

1.1.23.1.Direct the Contractor to communicate with or provide notice to the Construction Manager or the Architect on matters for which the Contract Documents indicate the Contractor will communicate with or provide notice to the District; and/or

1.1.23.2.Direct the Construction Manager or the Architect to communicate with or direct the Contractor on matters for which the Contract Documents indicate the District will communicate with or direct the Contractor.

1.1.24. **Drawings (or "Plans")**: The graphic and pictorial portions of the Contract Documents showing the design, location, scope and dimensions of the work, generally including plans, elevations, sections, details, schedules, sequence of operation, and diagrams.

1.1.25. **DSA**: Division of the State Architect.

1.1.26. **Force Account Directive**: A process that may be used when the District and the Contractor cannot agree on a price for a specific portion of work or before the Contractor prepares a price for a specific portion of work and whereby the Contractor performs the work as indicated herein on a time and materials basis.

1.1.27. **Job Cost Reports**: Any and all reports or records detailing the costs associated with work performed on or related to the Project that Contractor shall maintain for the Project. Specifically, Job Cost Reports shall contain, but are not limited by or to, the following information: a description of the work performed or to be performed on the Project; quantity, if applicable, of work performed (hours, square feet, cubic yards, pounds, etc.) for the Project; Project budget; costs for the Project to date; estimated costs to complete the Project; and expected costs at completion. The Job Cost Reports shall also reflect all Contract cost codes, change orders, elements of non-conforming work, back charges, and additional services.

1.1.28. **Labor Commissioner's Office (or "Labor Commissioner", also known as the Division of Labor Standards Enforcement ("DLSE"))**: Division of the DIR responsible for adjudicating wage claims, investigating discrimination and public works complaints, and enforcing Labor Code statutes and Industrial Welfare Commission orders.

1.1.29. **Municipal Separate Storm Sewer System (or "MS4")**: A system of conveyances used to collect and/or convey storm water, including, without limitation, catch basins, curbs, gutters, ditches, man-made channels, and storm drains.

1.1.30. **Plans**: See **Drawings**.

1.1.31. **Premises**: The real property owned by the District on which the Site is located.

1.1.32. **Product(s)**: New material, machinery, components, equipment, fixtures and systems forming the Work, including existing materials or components required and approved by the District for reuse.

1.1.33. **Product Data**: Illustrations, standard schedules, performance charts, instructions, brochures, diagrams, and other information furnished by the Contractor to illustrate a material, product, or system for some portion of the Work.

1.1.34. **Program Manager**: The individual, partnership, corporation, joint venture, or any combination thereof, or its authorized representative, named as such by the District. If no Program Manager is designated for Project that is the subject of this Contract, then all references to Project Manager herein shall be read to refer to District.

1.1.35. **Project**: The planned undertaking as provided for in the Contract Documents.

1.1.36. **Project Inspector (or "Inspector")**: The individual(s) retained by the District in accordance with title 24 of the California Code of Regulations to monitor and inspect the Project.

1.1.37. **Project Labor Agreement (or "PLA")**: a prehire collective bargaining agreement in accordance with Public Contract Code section 2500 et seq. that establishes terms and conditions of employment for a specific construction project or projects and/or is an agreement described in Section 158(f) of Title 29 of the United States Code.

1.1.38. **Proposed Change Order (or "PCO")**: a written request prepared by the Contractor requesting that the District and the Architect issue a Change Order based upon a proposed change to the Work.

1.1.39. **Provide**: Shall include "provide complete in place," that is, "furnish and install," and "provide complete and functioning as intended in place" unless specifically stated otherwise.

1.1.40. **Qualified SWPPP Practitioners (or "QSP")**: certified personnel that attended a State Water Resources Control Board sponsored or approved training class and passed the qualifying exam.

1.1.41. **Record Drawings**: Reproducible drawings (or Plans) prepared pursuant to the requirements of the Contract Documents that reflect all changes made during the performance of the Work, recording differences between the original design of the Work and the Work as constructed upon completion of the Project. See also **As-Builts**.

1.1.42. **Request for Information (or "RFI")**: A written request prepared by the Contractor requesting that the Architect provide additional information necessary to clarify or amplify an item in the Contract Documents that the Contractor believes is not clearly shown or called for in the Drawings or Specifications or other portions of the Contract Documents, or to address problems that have arisen under field conditions.

1.1.43. **Request for Substitution for Specified Item**: A request by Contractor to substitute an equal or superior material, product, thing, or service for a specific material, product, thing, or service that has been designated in the Contract Documents by a specific brand or trade name.

1.1.44. **Safety Orders**: Written and/or verbal orders for construction issued by the California Division of Occupational Safety and Health ("CalOSHA") or by the United States Occupational Safety and Health Administration ("OSHA").

1.1.45. **Safety Plan**: Contractor's safety plan specifically adapted for the Project. Contractor's Safety Plan shall comply with all provisions regarding Project safety, including all applicable provisions in these General Conditions.

1.1.46. **Samples**: Physical examples that illustrate materials, products, equipment, finishes, colors, or workmanship and that, when approved in accordance with the Contract Documents, establish standards by which portions of the Work will be judged.

1.1.47. **Shop Drawings**: All drawings, prints, diagrams, illustrations, brochures, schedules, and other data that are prepared by the Contractor, a subcontractor, manufacturer, supplier, or distributor, that illustrate how specific portions of the Work shall be fabricated or installed.

1.1.48. **Site**: The Project site as shown on the Drawings.

1.1.49. **Specifications**: That portion of the Contract Documents, Division 1 through Division 49, and all technical sections, and addenda to all of these, if any, consisting of written descriptions and requirements of a technical nature of materials, equipment, construction methods and systems, standards, and workmanship.

1.1.50. **State**: The State of California.

1.1.51. **Storm Water Pollution Prevention Plan (or "SWPPP")**: A document which identifies sources and activities at a particular facility that may contribute pollutants to storm water and contains specific control measures and time frames to prevent or treat such pollutants.

1.1.52. **Subcontractor**: A contractor and/or supplier who is under contract with the Contractor or with any other subcontractor, regardless of tier, to perform a portion of the Work of the Project.

1.1.53. **Submittal Schedule**: The schedule of submittals as provided by Contractor and approved by District.

1.1.54. **Surety**: The person, firm, or corporation that executes as surety the Contractor's Performance Bond and Payment Bond, and must be a California admitted surety insurer as defined in the Code of Civil Procedure section 995.120.

1.1.55. **Work**: All labor, materials, equipment, components, appliances, supervision, coordination, and services required by, or reasonably inferred from, the Contract Documents, that are necessary for the construction and completion of the Project.

1.2. **Laws Concerning the Contract; Venue**

Contract is subject to all provisions of the Constitution and laws of California and the United States governing, controlling, or affecting District, or the property, funds, operations, or powers of District, and such provisions are by this reference made a part hereof. Any provision required by law to be included in this Contract shall be deemed to be inserted.

To the fullest extent permitted by California law, the county in which the District administration office is located shall be the venue for any action or proceeding that may be brought or arise out of, in connection with or by reason of this Contract.

1.3. No Oral Agreements

No oral agreement or conversation with any officer, agent, or employee of District, either before or after execution of Contract, shall affect or modify any of the terms or obligations contained in any of the documents comprising the Contract.

1.4. No Assignment

Contractor shall not assign this Contract or any part thereof including, without limitation, any Work or money to become due hereunder without the prior written consent of the District. Assignment without District's prior written consent shall be null and void. Any assignment of money due or to become due under this Contract shall be subject to a prior lien for services rendered or material supplied for performance of work called for under this Contract in favor of all persons, firms, or corporations rendering services or supplying material to the extent that claims are filed pursuant to the Civil Code, Code of Civil Procedure, Government Code, Labor Code, and/or Public Contract Code, and shall also be subject to deductions for liquidated damages or withholding of payments as determined by District in accordance with this Contract. Contractor shall not assign or transfer in any manner to a Subcontractor or supplier the right to prosecute or maintain an action against the District.

1.5. Notice and Service Thereof

1.5.1. Any notice from one party to the other or otherwise under Contract shall be in writing and shall be dated and signed by the party giving notice or by a duly authorized representative of that party. Any notice shall not be effective for any purpose whatsoever unless served in one of the following manners:

1.5.1.1.If notice is given by personal delivery thereof, it shall be considered delivered on the day of delivery.

1.5.1.2.If notice is given by overnight delivery service, it shall be considered delivered one (1) day after date deposited, as indicated by the delivery service.

1.5.1.3.If notice is given by depositing same in United States mail, enclosed in a sealed envelope, it shall be considered delivered three (3) days after date deposited, as indicated by the postmarked date.

1.5.1.4.If notice is given by registered or certified mail with postage prepaid, return receipt requested, it shall be considered delivered on the day the notice is signed for.

1.5.1.5.Electronic mail may be used for convenience but is not a substitute for the notice and service requirements herein.

1.6. No Waiver

The failure of District in any one or more instances to insist upon strict performance of any of the terms of this Contract or to exercise any option herein conferred shall not be construed as a waiver or relinquishment to any extent of the right to assert or rely upon any such terms or option on any future occasion. No action or failure to act by the District, Architect, or Construction Manager shall constitute a waiver of any right or duty afforded the District under the Contract, nor shall any action

or failure to act constitute an approval of or acquiescence in any breach thereunder, except as may be specifically agreed in writing.

1.7. Substitutions for Specified Items

Unless the Special Conditions contain different provisions, Contractor shall not substitute different items for any items identified in the Contract Documents without prior written approval of the District.

1.8. Materials and Work

1.8.1. Except as otherwise specifically stated in this Contract, Contractor shall provide and pay for all materials, labor, tools, equipment, transportation, supervision, temporary constructions of every nature, and all other services, management, and facilities of every nature whatsoever necessary to execute and complete this Contract, in a good and workmanlike manner, within the Contract Time.

1.8.2. Unless otherwise specified, all materials shall be new and of the best quality of their respective kinds and grades as noted or specified, workmanship shall be of good quality, and Contractor shall use all diligence to inform itself fully as to the required manufacturer's instructions and to comply therewith.

1.8.3. Materials shall be furnished in ample quantities and at such times as to insure uninterrupted progress of Work and shall be stored properly and protected from the elements, theft, vandalism, or other loss or damage as required.

1.8.4. For all materials and equipment specified or indicated in the Drawings, the Contractor shall provide all labor, materials, equipment, and services necessary for complete assemblies and complete working systems, functioning as intended. Incidental items not indicated on Drawings, nor mentioned in the Specifications, that can legitimately and reasonably be inferred to belong to the Work described, or be necessary in good practice to provide a complete assembly or system, shall be furnished as though itemized here in every detail. In all instances, material and equipment shall be installed in strict accordance with each manufacturer's most recent published recommendations and specifications.

1.8.5. Contractor shall, after award of Contract by District and after relevant submittals have been reviewed, place orders for materials and/or equipment as specified so that delivery of same may be made without delays to the Work. Contractor shall, upon five (5) days' demand from District, present documentary evidence showing that orders have been placed.

1.8.6. District reserves the right but has no obligation, in response to Contractor's neglect or failure in complying with the above instructions, to place orders for such materials and/or equipment as the District may deem advisable in order that the Work may be completed at the date specified in the Contract, and all expenses incidental to the procuring of said materials and/or equipment shall be paid for by Contractor or deducted from payment(s) to Contractor.

1.8.7. Contractor warrants good title to all material, supplies, and equipment installed or incorporated in Work and agrees upon completion of all Work to deliver the Site to District,

together with all improvements and appurtenances constructed or placed thereon by it, and free from any claims, liens, or charges. Contractor further agrees that neither it nor any person, firm, or corporation furnishing any materials or labor for any work covered by the Contract shall have any right to lien any portion of the Premises or any improvement or appurtenance thereon, except that Contractor may install metering devices or other equipment of utility companies or of political subdivision, title to which is commonly retained by utility company or political subdivision. In the event of installation of any such metering device or equipment, Contractor shall advise District as to owner thereof.

1.8.7.1.If a lien or a claim based on a stop payment notice of any nature should at any time be filed against the Work or any District property, by any entity that has supplied material or services at the request of the Contractor, Contractor and Contractor's Surety shall promptly, on demand by District and at Contractor's and Surety's own expense, take any and all action necessary to cause any such lien or a claim based on a stop payment notice to be released or discharged immediately therefrom.

1.8.7.2.If the Contractor fails to furnish to the District within ten (10) calendar days after demand by the District, satisfactory evidence that a lien or a claim based on a stop payment notice has been so released, discharged, or secured, the District may discharge such indebtedness and deduct the amount required therefor, together with any and all losses, costs, damages, and attorney's fees and expense incurred or suffered by District from any sum payable to Contractor under the Contract.

1.8.8. Nothing contained in this Article, however, shall defeat or impair the rights of persons furnishing materials or labor under any bond given by Contractor for their protection or any rights under any law permitting such protection or any rights under any law permitting such persons to look to funds due Contractor in hands of District (e.g., stop payment notices), and this provision shall be inserted in all subcontracts and material contracts and notice of its provisions shall be given to all persons furnishing material for work when no formal contract is entered into for such material.

1.8.9. Title to new materials and/or equipment for the Work of this Contract and attendant liability for its protection and safety shall remain with Contractor until incorporated in the Work of this Contract and accepted by District. No part of any materials and/or equipment shall be removed from its place of storage except for immediate installation in the Work of this Contract. Should the District, in its discretion, allow the Contractor to store materials and/or equipment for the Work off-site, Contractor will store said materials and/or equipment at a bonded warehouse and with appropriate insurance coverage at no cost to District. Contractor shall keep an accurate inventory of all materials and/or equipment in a manner satisfactory to District or its authorized representative and shall, at the District's request, forward it to the District.

1.8.10. **[RESERVED]**

2. <u>[RESERVED]</u>

3. <u>ARCHITECT</u>

The Architect shall represent the District during the Project and will observe the progress and quality of the Work on behalf of the District. Architect shall have the authority to act

on behalf of District to the extent expressly provided in the Contract Documents and to the extent determined by District. Architect shall have authority to reject materials, workmanship, and/or the Work whenever rejection may be necessary, in Architect's reasonable opinion, to ensure the proper execution of the Contract.

Architect shall, with the District and on behalf of the District, determine the amount, quality, acceptability, and fitness of all parts of the Work, and interpret the Specifications, Drawings, and shall, with the District, interpret all other Contract Documents.

Architect shall have all authority and responsibility established by law, including title 24 of the California Code of Regulations.

Contractor shall provide District and the Construction Manager with a copy of all written communication between Contractor and Architect at the same time as that communication is made to Architect, including, without limitation, all RFIs, correspondence, submittals, claims, and proposed change orders.

4. CONSTRUCTION MANAGER

If a Construction Manager is used on this Project ("Construction Manager" or "CM"), the Construction Manager will provide administration of the Contract on the District's behalf. After execution of the Contract and Notice to Proceed, all correspondence and/or instructions from Contractor and/or District shall be forwarded through the Construction Manager. The Construction Manager will not be responsible for and will not have control or charge of construction means, methods, techniques, sequences, or procedures or for safety precautions in connection with the Work, which shall all remain the Contractor's responsibility.

The Construction Manager, however, will have authority to reject materials and/ or workmanship not conforming to the Contract Documents, as determined by the District, the Architect, and/or the Project Inspector. The Construction Manager shall also have the authority to require special inspection or testing of any portion of the Work, whether it has been fabricated, installed, or fully completed. Any decision made by the Construction Manager, in good faith, shall not give rise to any duty or responsibility of the Construction Manager to: the Contractor; any Subcontractor; the Contractor or Subcontractor's respective agents, employees; or other persons performing any of the Work. The Construction Manager shall have free access to any or all parts of Work at any time.

If the District does not use a Construction Manager on this Project, all references within the Contract Documents to Construction Manager or CM shall be read as District.

5. INSPECTOR, INSPECTIONS, AND TESTS

5.1. Project Inspector

5.1.1. One or more Project Inspector(s), including special Project Inspector(s), as required, will be assigned to the Work by District, in accordance with requirements of title 24, part 1, of the California Code of Regulations, to enforce the building code and monitor compliance with Plans and Specifications for the Project previously approved by the DSA. Duties of Project Inspector(s) are specifically defined in section 4-342 of said part 1 of title 24.

5.1.2. No Work shall be carried on except with the knowledge and under the inspection of the Project Inspector(s). The Project Inspector(s) shall have free access to any or all parts of Work at any time. Contractor shall furnish Project Inspector(s) reasonable opportunities for obtaining such information as may be necessary to keep Project Inspector(s) fully informed respecting progress and manner of work and character of materials, including, but not limited to, submission of form DSA 156 (or the most current version applicable at the time the Work is performed) to the Project Inspector at least 48 hours in advance of the commencement and completion of construction of each and every aspect of the Work. Forms are available on the DSA's website at: http://www.dgs.ca.gov/dsa/Forms.aspx. Inspection of Work shall not relieve Contractor from an obligation to fulfill this Contract. Project Inspector(s) and the DSA are authorized to suspend work whenever the Contractor and/or its Subcontractor(s) are not complying with the Contract Documents. Any work stoppage by the Project Inspector(s) and/or DSA shall be without liability to the District. Contractor shall instruct its Subcontractors and employees accordingly.

5.1.3. If Contractor and/or any Subcontractor requests that the Project Inspector(s) perform any inspection off-site, this shall only be done if it is allowable pursuant to applicable regulations and DSA approval, if the Project Inspector(s) agree to do so, and at the expense of the Contractor.

5.2. <u>Tests and Inspections</u>

5.2.1. Tests and Inspections shall comply with title 24, part 1, California Code of Regulations, group 1, article 5, section 4-335, and with the provisions of the Specifications.

5.2.2. The District will select an independent testing laboratory to conduct the tests. Selection of the materials required to be tested shall be by the laboratory or the District's representative and not by the Contractor. The Contractor shall notify the District's representative a sufficient time in advance of its readiness for required observation or inspection.

5.2.3. The Contractor shall notify the District's representative a sufficient time in advance of the manufacture of material to be supplied under the Contract Documents, which must by terms of the Contract Documents be tested, in order that the District may arrange for the testing of same at the source of supply. This notice shall be provided, at a minimum, seventy-two (72) hours prior to the manufacture of the material that needs to be tested.

5.2.4. Any material shipped by the Contractor from the source of supply prior to having satisfactorily passed such testing and inspection or prior to the receipt of notice from said representative that such testing and inspection will not be required, shall not be incorporated into and/or onto the Project.

5.2.5. The District will select the testing laboratory and pay for the cost of all tests and inspections, excepting those inspections performed at Contractor's request and expense. Contractor shall reimburse the District for any and all laboratory costs or other testing costs for any materials found to be not in compliance with the Contract Documents. At the District's discretion, District may elect to deduct laboratory or other testing costs for noncompliant materials from the Contract Price, and such deduction shall not constitute a withholding.

5.3. Costs for After Hours and/or Off Site Inspections

If the Contractor performs Work outside the Inspector's regular working hours or requests the Inspector to perform inspections off Site, costs of any inspections required outside regular working hours or off Site shall be borne by the Contractor and may be invoiced to the Contractor by the District or the District may deduct those expenses from the next Progress Payment.

6. CONTRACTOR

Contractor shall construct and complete, in a good and workmanlike manner, the Work for the Contract Price including any adjustment(s) to the Contract Price pursuant to provisions herein regarding changes to the Contract Price. Except as otherwise noted, Contractor shall provide and pay for all labor, materials, equipment, permits (excluding DSA), fees, licenses, facilities, transportation, taxes, bonds and insurance, and services necessary for the proper execution and completion of the Work, except as indicated herein.

6.1. Status of Contractor

6.1.1. Contractor represents and warrants that Contractor is an independent contractor or business entity that is: (i) free from the control and direction of the District in connection with the performance of the Services, (ii) performing Services that are outside the usual course of the District's business, and (iii) customarily engaged in an independently established trade, occupation, or business of the same nature as that involved in the Services performed, District being interested only in the results obtained. Contractor understands and agrees that it and all of its employees and its Subcontractors shall not be considered officers, employees, agents, partner, or joint venture of the District, and are not entitled to benefits of any kind or nature normally provided employees of the District and/or to which District's employees are normally entitled, including, but not limited to, State Unemployment Compensation or Worker's Compensation. Contractor shall assume full responsibility for payment of all federal, state, and local taxes or contributions, including unemployment insurance, social security, and income taxes with respect to Consultant's employees. Contractor is and shall at all times be wholly responsible for the manner in which it, its agents, and its Subcontractors perform the services required of it by the Contract Documents. Nothing herein contained shall be construed as creating the relationship of employer and employee, or principal and agent, between the District, or any of the District's employees or agents, and Contractor or any of Contractor's Subcontractors, agents or employees. District shall be permitted to monitor the Contractor's activities to determine compliance with the terms of this Contract.

6.1.2. As required by law, Contractor and all Subcontractors shall be properly licensed and regulated by the Contractors State License Board, 9821 Business Park Drive, Sacramento, California 95827, http://www.cslb.ca.gov.

6.1.3. As required by law, Contractor and all Subcontractors shall be properly registered as public works contractors by the Department of Industrial Relations at: https://efiling.dir.ca.gov/PWCR/ActionServlet?action=displayPWCRegistrationForm or current URL.

6.1.4. Contractor represents that Contractor and all Subcontractors shall not be presently debarred, suspended, proposed for disbarment, declared ineligible or excluded pursuant to either Labor Code section 1777.1 or Labor Code section 1777.7.

6.1.5. **[RESERVED]**

6.1.6. Contractor represents that it has no existing interest and will not acquire any interest, direct or indirect, which could conflict in any manner or degree with the performance of Work required under this Contract and that no person having any such interest shall be employed by Contractor.

6.1.7. **[RESERVED]**

6.1.8. If Contractor intends to make any change in the name or legal nature of the Contractor's entity, Contractor must first notify the District in writing prior to making any contemplated change. The District shall determine in writing if Contractor's intended change is permissible while performing this Contract.

6.2. <u>Project Inspection Card(s)</u>

Contractor shall verify that forms DSA 152 (or the current version applicable at the time the Work is performed) are issued for the Project prior to the commencement of construction.

6.3. <u>Contractor's Supervision</u>

6.3.1. During progress of the Work, Contractor shall keep on the Premises, and at all other locations where any Work related to the Contract is being performed, an experienced and competent project manager and construction superintendent who are employees of the Contractor, to whom the District does not object and at least one of whom shall be fluent in English, written and verbal.

6.3.2. The project manager and construction superintendent shall both speak fluently the predominant language of the Contractor's employees.

6.3.3. Before commencing the Work herein, Contractor shall give written notice to District of the name of its project manager and construction superintendent. Neither the Contractor's project manager nor construction superintendent shall be changed except with prior written notice to District. If the Contractor's project manager and/or construction superintendent proves to be unsatisfactory to Contractor, or to District, any of the District's employees, agents, the Construction Manager, or the Architect, the unsatisfactory project manager and/or construction superintendent shall be replaced. However, Contractor shall notify District in writing before any change occurs, but no less than two (2) business days prior. Any replacement of the project manager and/or construction superintendent shall be made promptly and must be satisfactory to the District. The Contractor's project manager and construction superintendent shall each represent Contractor, and all directions given to Contractor's project manager and/or construction superintendent shall be as binding as if given to Contractor.

6.3.4. Contractor shall give efficient supervision to Work, using its best skill and attention. Contractor shall carefully study and compare all Contract Documents, Drawings, Specifications, and other instructions and shall at once report to District, Construction Manager, and Architect any error, inconsistency, or omission that Contractor or its employees and Subcontractors may discover, in writing, with a copy to District's Project

Inspector(s). The Contractor shall have responsibility for discovery of errors, inconsistencies, or omissions.

6.4. Duty to Provide Fit Workers

6.4.1. Contractor and Subcontractor(s) shall at all times enforce strict discipline and good order among their employees and shall not employ or work any unfit person or anyone not skilled in work assigned to that person. It shall be the responsibility of Contractor to ensure compliance with this requirement. District may require Contractor to permanently remove unfit persons from Project Site.

6.4.2. Any person in the employ of Contractor or Subcontractor(s) whom District may deem incompetent or unfit shall be excluded from working on the Project and shall not again be employed on the Project except with the prior written consent of District.

6.4.3. The Contractor shall furnish labor that can work in harmony with all other elements of labor employed or to be employed in the Work.

6.4.4. **Fingerprinting.** Contractor shall comply with the provisions of Education Code section 45125.2 regarding the submission of employee fingerprints to the California Department of Justice and the completion of criminal background investigations of its employees, its subcontractor(s), and its subcontractors' employees. Contractor shall not permit any employee to have any contact with District pupils until such time as Contractor has verified in writing to the governing board of the District, (A) that such employee has not been convicted of a violent or serious felony, as defined in Education Code section 45122.1 and/or (B) that the prohibition does not apply to an employee as provided by Education Code section 45125.1(e)(2) or (3). Contractor shall fully complete and perform all tasks required pursuant to the Criminal Background Investigation/ Fingerprinting Certification.

6.5. Field Office

6.5.1. Contractor shall provide a temporary office on the Site for the District's use exclusively, during the term of the Contract.

6.6. Purchase of Materials and Equipment

The Contractor is required to order, obtain, and store materials and equipment sufficiently in advance of its Work at no additional cost or advance payment from District to assure that there will be no delays.

6.7. Documents on Work

6.7.1. Contractor shall at all times keep on the Site, or at another location as the District may authorize in writing, one legible copy of all Contract Documents, including Addenda and Change Orders, and Titles 19 and 24 of the California Code of Regulations, the specified edition(s) of the Uniform Building Code, all approved Drawings, Plans, Schedules, and Specifications, and all codes and documents referred to in the Specifications, and made part thereof. These documents shall be kept in good order and available to District, Construction Manager, Architect, Architect's representatives, the Project Inspector(s), and all authorities having jurisdiction. Contractor shall be acquainted with and comply with the provisions of

these titles as they relate to this Project. (See particularly the duties of Contractor, Title 24, Part 1, California Code of Regulations, section 4-343.) Contractor shall also be acquainted with and comply with all California Code of Regulations provisions relating to conditions on this Project, particularly Titles 8 and 17. Contractor shall coordinate with Architect and Construction Manager and shall submit its verified report(s) according to the requirements of Title 24.

6.7.2. Daily Job Reports.

6.7.2.1.Contractor shall maintain, at a minimum, at least one (1) set of Daily Job Reports on the Project. These must be prepared by the Contractor's employee(s) who are present on Site, and must include, at a minimum, the following information:

6.7.2.1.1.A brief description of all Work performed on that day.
6.7.2.1.2. A summary of all other pertinent events and/or occurrences on that day.
6.7.2.1.3.The weather conditions on that day.
6.7.2.1.4. A list of all Subcontractor(s) working on that day, including DIR registration numbers.
6.7.2.1.5. A list of each Contractor employee working on that day and the total hours worked for each employee.
6.7.2.1.6. A complete list of all equipment on Site that day, whether in use or not.
6.7.2.1.7. A complete list of all materials, supplies, and equipment delivered on that day.
6.7.2.1.8. A complete list of all inspections and tests performed on that day.

6.7.2.2.Each day Contractor shall provide a copy of the previous day's Daily Job Report to the District or the Construction Manager.

6.8. <u>Preservation of Records</u>

Contractor shall maintain, and District shall have the right to inspect, Contractor's financial records for the Project, including, without limitation, Job Cost Reports for the Project in compliance with the criteria set forth herein. The District shall have the right to examine and audit all Daily Job Reports or other Project records of Contractor's project manager(s), project superintendent(s), and/or project foreperson(s), all certified payroll records and/or related documents including, without limitation, Job Cost Reports, payroll, payment, timekeeping and tracking documents; all books, estimates, records, contracts, documents, bid documents, bid cost data, subcontract job cost reports, and other data of the Contractor, any Subcontractor, and/or supplier, including computations and projections related to bidding, negotiating, pricing, or performing the Work or Contract modification, in order to evaluate the accuracy, completeness, and currency of the cost, manpower, coordination, supervision, or pricing data at no additional cost to the District. These documents may be duplicative and/or be in addition to any Bid Documents held in escrow by the District. The Contractor shall make available at its office at all reasonable times the materials described in this paragraph for the examination, audit, or reproduction until three (3) years after final payment under this Contract. Notwithstanding the provisions above, Contractor shall provide any records requested by any governmental agency, if available, after the time set forth above.

6.9. Integration of Work

6.9.1. Contractor shall do all cutting, fitting, patching, and preparation of Work as required to make its several parts come together properly, to fit it to receive or be received by work of other contractors, and to coordinate tolerances to various pieces of work, showing upon, or reasonably implied by, the Drawings and Specifications for the completed structure, and shall conform them as District and/or Architect may direct.

6.9.2. Contractor shall make its own layout of lines and elevations and shall be responsible for the accuracy of both Contractor's and Subcontractors' work resulting therefrom.

6.9.3. Contractor and all Subcontractors shall take all field dimensions required in performance of the Work and shall verify all dimensions and conditions on the Site. All dimensions affecting proper fabrication and installation of all Work must be verified prior to fabrication by taking field measurements of the true conditions. If there are any discrepancies between dimensions in drawings and existing conditions which will affect the Work, Contractor shall bring such discrepancies to the attention of the District and Architect for adjustment before proceeding with the Work. In doing so, it is recognized that Contractor is not acting in the capacity of a licensed design professional, and that Contractor's examination is made in good faith to facilitate construction and does not create an affirmative responsibility of a design professional to detect errors, omissions or inconsistencies in the Contract Documents or to ascertain compliance with applicable laws, building codes or regulations. However, nothing in this provision shall abrogate Contractor's responsibilities for discovering and reporting any error, inconsistency, or omission pursuant to the Contract within the Contractor's standard of care including, without limitation, any applicable laws, ordinance, rules, or regulations. Following receipt of written notice from Contractor, the District and/or Architect shall inform Contractor what action, if any, Contractor shall take with regard to such discrepancies.

6.9.4. All costs caused by noncompliant, defective, or delayed Work shall be borne by Contractor, inclusive of repair work. Schedule delays resulting from unauthorized work shall be Contractor's responsibility.

6.9.5. Contractor shall not endanger any work performed by it or anyone else by cutting, excavating, or otherwise altering work and shall not cut or alter work of any other contractor except with consent of District.

6.10. Notifications

6.10.1. Contractor shall notify the Architect and Project Inspector, in writing, of the commencement of construction of each and every aspect of the Work at least 48 hours in advance by submitting form DSA 156 (or the most current version applicable at the time the Work is performed) to the Project Inspector. Forms are available on the DSA's website at: http://www.dgs.ca.gov/dsa/Forms.aspx.

6.10.2. Contractor shall notify the Architect and Project Inspector, in writing, of the completion of construction of each and every aspect of the Work at least 48 hours in advance by submitting form DSA 156 (or current version) to the Project Inspector.

6.11. Obtaining of Permits, Licenses and Registrations

6.11.1. Contractor shall secure and pay for all permits (except DSA), licenses, registrations, approvals and certificates necessary for prosecution of Work, including but not limited to those listed in the Special Conditions, if any, before the date of the commencement of the Work or before the permits, licenses, registrations, approvals and certificates are legally required to continue the Work without interruption. The Contractor shall obtain and pay, only when legally required, for all licenses, registrations, approvals, permits, inspections, and inspection certificates required to be obtained from or issued by any authority having jurisdiction over any part of the Work included in the Contract. All final permits, licenses, registrations, approvals and certificates shall be delivered to District before demand is made for final payment.

6.11.2. General Permit For Storm Water Discharges Associated With Construction and Land Disturbance Activities.

6.11.2.1.Contractor acknowledges that all California school districts are obligated to develop and implement the following requirements for the discharge of storm water to surface waters from its construction and land disturbance activities pursuant to the Clean Water Act and Porter Cologne Water Quality Act. District has determined that the construction of this Project requires enrollment in the Construction Storm Water Permit. District has filed certain submittals referred to as Permit Registration Documents ("PRDS") with the Regional Water Control Board ("Storm Water Pollution Prevention Plan" or "SWPPP").

6.11.2.2.Contractor shall comply with any District SWPPP that is approved by the District and applicable to the Project, at no additional cost to the District. Contractor shall pay any fees and any penalties that may imposed by a regulatory agency for its non-compliance with the SWPPP during the course of Work.

6.11.2.3.Contractor shall provide a Qualified Storm Water Practitioner ("QSP") at no additional cost to the District, who shall perform on-site inspections and implement and monitor any and all SWPPP requirements applicable to the Project, including required visual observations, sampling, analysis, reporting and record keeping, including of Total Maximum Daily Loads ("TMDL") of pollutants and construction dewatering and discharge, and Best Management Practices ("BMPs").

6.12. Royalties and Patents

6.12.1. Contractor shall obtain and pay, only when legally required, all royalties and license fees necessary for prosecution of Work before the earlier of the date of the commencement of the Work or the date that the license is legally required to continue the Work without interruption. Contractor shall defend suits or claims of infringement of patent, copyright, or other rights and shall hold the District, the Architect, and the Construction Manager harmless and indemnify them from loss on account thereof except when a particular design, process, or make or model of product is required by the Contract Documents. However, if the Contractor has reason to believe that the required design, process, or product is an infringement of a patent or copyright, the Contractor shall indemnify and defend the District, Architect and Construction Manager against any loss or damage unless the Contractor promptly informs the District of its information.

6.12.2. The review by the District or Architect of any method of construction, invention, appliance, process, article, device, or material of any kind shall be only its adequacy for the Work and shall not approve use by the Contractor in violation of any patent or other rights of any person or entity.

6.13. <u>Work to Comply With Applicable Laws and Regulations</u>

6.13.1. Contractor shall give all notices and comply with the following specific laws, ordinances, rules, and regulations and all other applicable laws, ordinances, rules, and regulations bearing on conduct of Work as indicated and specified, including but not limited to the appropriate statutes and administrative code sections. If Contractor observes that Drawings and Specifications are at variance therewith, or should Contractor become aware of the development of conditions not covered by Contract Documents that may result in finished Work being at variance therewith, Contractor shall promptly notify District in writing and any changes deemed necessary by District shall be made as provided in Contract for changes in Work.

6.13.1.1.National Electrical Safety Code, U. S. Department of Commerce

6.13.1.2.National Board of Fire Underwriters' Regulations

6.13.1.3.International Building Code, latest addition, and the California Code of Regulations, title 24, and other amendments

6.13.1.4.Manual of Accident Prevention in Construction, latest edition, published by A.G.C. of America

6.13.1.5.Industrial Accident Commission's Safety Orders, State of California

6.13.1.6.Regulations of the State Fire Marshall (title 19, California Code of Regulations) and Pertinent Local Fire Safety Codes

6.13.1.7.Americans with Disabilities Act

6.13.1.8.Education Code of the State of California

6.13.1.9.Government Code of the State of California

6.13.1.10.Labor Code of the State of California, division 2, part 7, Public Works and Public Agencies

6.13.1.11.Public Contract Code of the State of California

6.13.1.12.California Art Preservation Act

6.13.1.13.U. S. Copyright Act

6.13.1.14.U. S. Visual Artists Rights Act

6.13.2. Contractor shall comply with all applicable mitigation measures, if any, adopted by any public agency with respect to this Project pursuant to the California Environmental Quality Act (Public Resources Code section 21000 et seq.).

6.13.3. If Contractor performs any Work that it knew, or through exercise of reasonable care should have known, to be contrary to any applicable laws, ordinance, rules, or regulations, Contractor shall bear all costs arising therefrom and arising from the correction of said Work.

6.13.4. Where Specifications or Drawings state that materials, processes, or procedures must be approved by the DSA, State Fire Marshall, or other body or agency, Contractor shall be responsible for satisfying requirements of such bodies or agencies applicable at the time the Work is performed, and as determined by those bodies or agencies.

6.13.5. **[RESERVED]**

6.14. <u>Safety/Protection of Persons and Property</u>

6.14.1. The Contractor will be solely and completely responsible for conditions of the Site, including safety of all persons and property during performance of the Work. This requirement will apply continuously and not be limited to normal working hours.

6.14.2. The wearing of hard hats will be mandatory at all times for all personnel on Site. Contractor shall supply sufficient hard hats to properly equip all employees and visitors.

6.14.3. Any construction review of the Contractor's performance is not intended to include review of the adequacy of the Contractor's safety measures in, on, or near the Site.

6.14.4. Implementation and maintenance of safety programs shall be the sole responsibility of the Contractor.

6.14.5. The Contractor shall furnish to the District a copy of the Contractor's safety plan within the time frame indicated in the Contract Documents and specifically adapted for the Project.

6.14.6. Contractor shall be responsible for all damages to persons or property that occur as a result of its fault or negligence in connection with the prosecution of this Contract and shall take all necessary measures and be responsible for the proper care and completion and final acceptance by District. All Work shall be solely at Contractor's risk with the exception of damage to the Work caused by "acts of God" as defined in Public Contract Code section 7105.

6.14.7. Contractor shall take, and require Subcontractors to take, all necessary precautions for safety of workers on the Project and shall comply with all applicable federal, state, local, and other safety laws, standards, orders, rules, regulations, and building codes to prevent accidents or injury to persons on, about, or adjacent to premises where Work is being performed and to provide a safe and healthful place of employment. Contractor shall furnish, erect, and properly maintain at all times, all necessary safety devices, safeguards, construction canopies, signs, nets, barriers, lights, and watchmen for protection of workers and the public and shall post danger signs warning against hazards created by such features in the course of construction.

6.14.8. Hazards Control – Contractor shall store volatile wastes in covered metal containers and remove them from the Site daily. Contractor shall prevent accumulation of wastes that create hazardous conditions. Contractor shall provide adequate ventilation during use of volatile or noxious substances.

6.14.9. Contractor shall designate a responsible member of its organization on the Project, whose duty shall be to post information regarding protection and obligations of workers and other notices required under occupational safety and health laws, to comply with reporting and other occupational safety requirements, and to protect the life, safety, and health of workers. Name and position of person so designated shall be reported to District by Contractor.

6.14.10. Contractor shall correct any violations of safety laws, rules, orders, standards, or regulations. Upon the issuance of a citation or notice of violation by the Division of Occupational Safety and Health, Contractor shall correct such violation promptly.

6.14.11. Contractor shall comply with any District storm water requirements that are approved by the District and applicable to the Project, at no additional cost to the District.

6.14.12. In an emergency affecting safety of life or of work or of adjoining property, Contractor, without special instruction or authorization, shall act, at its discretion, to prevent such threatened loss or injury. Any compensation claimed by Contractor on account of emergency work shall be determined by agreement.

6.14.13. All salvage materials will become the property of the Contractor and shall be removed from the Site unless otherwise called for in the Contract Documents. However, the District reserves the right to designate certain items of value that shall be turned over to the District unless otherwise directed by District.

6.14.14. All connections to public utilities and/or existing on-site services, including, without limitation, internet, phone and data connections, shall be made and maintained in such a manner as to not interfere with the continuing use of same by the District during the entire progress of the Work.

6.14.15. Contractor shall provide such heat, covering, and enclosures as are necessary to protect all Work, materials, equipment, appliances, and tools against damage by weather conditions, such as extreme heat, cold, rain, snow, dry winds, flooding, or dampness.

6.14.16. Contractor shall protect and preserve the Work from all damage or accident, providing any temporary roofs, window and door coverings, boxings, or other construction as required by the Architect. The Contractor shall be responsible for existing structures, walks, roads, trees, landscaping, and/or improvements in working areas; and shall provide adequate protection therefore. If temporary removal is necessary of any of the above items, or damage occurs due to the Work, the Contractor shall replace same at his expense with same kind, quality, and size of Work or item damaged. This shall include any adjoining property of the District and others.

6.14.17. Contractor shall take adequate precautions to protect existing roads, sidewalks, curbs, pavements, utilities, adjoining property, and structures (including, without limitation,

protection from settlement or loss of lateral support), and to avoid damage thereto, and repair any damage thereto caused by construction operations.

6.14.18. Contractor shall confine apparatus, the storage of materials, and the operations of workers to limits indicated by law, ordinances, permits, or directions of Architect, and shall not interfere with the Work or unreasonably encumber Premises or overload any structure with materials. Contractor shall enforce all instructions of District and Architect regarding signs, advertising, fires, and smoking, and require that all workers comply with all regulations while on Project Site.

6.14.19. Contractor, Contractor's employees, Subcontractors, Subcontractors' employees, or any person associated with the Work shall conduct themselves in a manner appropriate for a school site. No verbal or physical contact with neighbors, students, and faculty, profanity, or inappropriate attire and/or logos, or behavior will be permitted. District may require Contractor to temporarily or permanently remove non-complying persons from Project Site.

6.14.20. Contractor shall take care to prevent disturbing or covering any survey markers, monuments, or other devices marking property boundaries or corners. If such markers are disturbed, Contractor shall have a civil engineer, registered as a professional engineer in California, replace them at no cost to District.

6.14.21. In the event that the Contractor enters into any agreement with owners of any adjacent property to enter upon the adjacent property for the purpose of performing the Work, Contractor shall fully indemnify, defend, and hold harmless each person, entity, firm, or agency that owns or has any interest in adjacent property. The form and content of the agreement of indemnification shall be approved by the District prior to the commencement of any Work on or about the adjacent property. The Contractor shall also indemnify the District as provided in the indemnification provision herein. These provisions shall be in addition to any other requirements of the owners of the adjacent property.

6.15. <u>Working Evenings and Weekends</u>

Contractor may be required to work increased hours, evenings, and/or weekends at no additional cost to the District. Contractor shall give the District seventy-two (72) hours' notice prior to performing any evening and/or weekend work. Contractor shall perform all evening and/or weekend work only upon District's approval and in compliance with all applicable rules, regulations, laws, and local ordinances including, without limitation, all noise and light limitations. Contractor shall reimburse the District for any increased or additional Inspector charges as a result of Contractor's increased hours, or evening and/or weekend work.

6.16. <u>Cleaning Up</u>

6.16.1. The Contractor shall provide all services, labor, materials, and equipment necessary for protecting and securing the Work, all school occupants, furnishings, equipment, and building structure from damage until its completion and final acceptance by District. Dust barriers shall be provided to isolate dust and dirt from construction operations. At completion of the Work and portions thereof, Contractor shall clean to the original state any areas beyond the Work area that become dust laden as a result of the Work. The Contractor must erect the necessary warning signs and barricades to ensure the safety of all school occupants. The Contractor at all times must maintain good housekeeping practices to

reduce the risk of fire damage and must make a fire extinguisher, fire blanket, and/or fire watch, as applicable, available at each location where cutting, braising, soldering, and/or welding is being performed or where there is an increased risk of fire.

6.16.2. Contractor at all times shall keep Premises, including property immediately adjacent thereto, free from debris such as waste, rubbish (including personal rubbish of workers, e.g., food wrappers, etc.), and excess materials and equipment caused by the Work. Contractor shall not leave debris under, in, or about the Premises (or surrounding property or neighborhood), but shall promptly remove same from the Premises on a daily basis. If Contractor fails to clean up, District may do so and the cost thereof shall be charged to Contractor. If Contract is for work on an existing facility, Contractor shall also perform specific clean-up on or about the Premises upon request by the District as it deems necessary for continued operations. Contractor shall comply with all related provisions of the Specifications.

6.16.3. If the Construction Manager, Architect, or District observes the accumulation of trash and debris, the District will give the Contractor a 24-hour written notice to mitigate the condition.

6.16.4. Should the Contractor fail to perform the required clean-up, or should the clean-up be deemed unsatisfactory by the District, the District may, at its sole discretion, then perform the clean-up. All cost associated with the clean-up work (including all travel, payroll burden, and costs for supervision) will be deducted from the Contract Price.

6.17. <u>No Relief from Obligations Based on Review by Other Persons</u>

6.17.1. Contractor shall not be relieved of obligations to perform the Work in accordance with the Contract Documents by act or omission of the District, Architect, Construction Manager, Project Inspector, or DSA or other entities having jurisdiction including, but not limited to, administration of the Contract, review of submittals, or by tests, observation, inspection, or permit/interconnection approvals.

7. SUBCONTRACTORS

Contractor shall provide the District with information for all Subcontracts as indicated in the Contractor's Submittals and Schedules Section herein.

No contractual relationship exists between the District and any Subcontractor, supplier, or sub-subcontractor by reason of this Contract.

Contractor agrees to bind every Subcontractor by terms of this Contract as far as those terms that are applicable to Subcontractor's work including, without limitation, all labor, wage & hour, apprentice and related provisions and requirements. If Contractor shall subcontract any part of this Contract, Contractor shall be as fully responsible to District for acts and omissions of any Subcontractor and of persons either directly or indirectly employed by any Subcontractor, including Subcontractor caused Project delays, as it is for acts and omissions of persons directly employed by Contractor. The divisions or sections of the Specifications and/or the arrangement of the drawings are not intended to control the Contractor in dividing the Work among Subcontractors or limit the work performed by any trade.

District's consent to, or approval of, or failure to object to, any Subcontractor under this Contract shall not in any way relieve Contractor of any obligations under this Contract and no such consent shall be deemed to waive any provisions of this Contract.

Contractor is directed to familiarize itself with sections 4100 through 4114 of the Public Contract Code of the State of California, as regards subletting and subcontracting, and to comply with all applicable requirements therein. In addition, Contractor is directed to familiarize itself with sections 1720 through 1861 of the Labor Code of the State of California, as regards the payment of prevailing wages and related issues, and to comply with all applicable requirements therein including, without limitation, section 1775 and the Contractor's and Subcontractors' obligations and liability for violations of prevailing wage law and other applicable laws.

No Contractor whose Bid is accepted shall, without consent of the awarding authority and in full compliance with section 4100 et seq. of the Public Contract Code, including, without limitation, sections 4107, 4107.5, and 4109 of the Public Contract Code, and section 1771.1 of the Labor Code, either:

7.1.1. Substitute any person as a Subcontractor in place of the Subcontractor designated in the original Bid; or

7.1.2. Permit any Subcontract to be assigned or transferred, or allow any portion of the Work to be performed by anyone other than the original Subcontractor listed in the Bid; or

7.1.3. Sublet or subcontract any portion of the Work in excess of one-half of one percent (0.5%) of the Contractor's total bid as to which his original bid did not designate a Subcontractor.

The Contractor shall be responsible for the coordination of the trades, Subcontractors, sub-subcontractors, and material or equipment suppliers working on the Project.

7.1.4. If the Contract is valued at $1 million or more and uses, or plans to use, state bond funds, then Contractor is responsible for ensuring that first tier Subcontractors holding C-4, C-7, C-10, C-16, C-20, C-34, C-36, C-38, C-42, C-43, and/or C-46 licenses are prequalified by the District to work on the Project pursuant to Public Contract Code section 20111.6.

7.1.5. Contractor is responsible for ensuring that all Subcontractors are properly registered as public works contractors by the Department of Industrial Relations.

Contractor is solely responsible for settling any differences between the Contractor and its Subcontractor(s) or between Subcontractors.

Contractor must include in all of its subcontracts the assignment provisions as indicated in the Termination section of these General Conditions.

8. OTHER CONTRACTS/CONTRACTORS

District reserves the right to let other contracts, and/or to perform work with its own forces, in connection with the Project. Contractor shall afford other contractors reasonable opportunity for introduction and storage of their materials and execution of their work and shall properly coordinate and connect Contractor's Work with the work of other contractors.

In addition to Contractor's obligation to protect its own Work, Contractor shall protect the work of any other contractor that Contractor encounters while working on the Project.

If any part of Contractor's Work depends for proper execution or results upon work of District or any other contractor, the Contractor shall inspect and, before proceeding with its Work, promptly report to the District in writing any defects in District's or any other contractor's work that render Contractor's Work unsuitable for proper execution and results. Contractor shall be held accountable for damages to District for District's or any other contractor's work that Contractor failed to inspect or should have inspected. Contractor's failure to inspect and report shall constitute Contractor's acceptance of all District's or any other contractor's work as fit and proper for reception of Contractor's Work, except as to defects that may develop in District's or any other contractor's work after execution of Contractor's Work and not caused by execution of Contractor's Work.

To ensure proper execution of its subsequent work, Contractor shall measure and inspect work already in place and shall at once report to the District in writing any discrepancy between that executed work and the Contract Documents.

Contractor shall ascertain to its own satisfaction the scope of the Project and nature of District's or any other contracts that have been or may be awarded by District in prosecution of the Project to the end that Contractor may perform this Contract in light of the other contracts, if any.

Nothing herein contained shall be interpreted as granting to Contractor exclusive occupancy of the Site, the Premises, or of the Project. Contractor shall not cause any unnecessary hindrance or delay to the use and/or operation(s) of the Premises and/or to District or any other contractor working on the Project. If simultaneous execution of any contract or Premises operation is likely to cause interference with performance of Contractor's Contract, Contractor shall coordinate with those contractor(s), person(s), and/or entity(s) and shall notify the District of the resolution.

9. DRAWINGS AND SPECIFICATIONS

A complete list of all Drawings that form a part of the Contract is to be found as an index on the Drawings themselves, and/or may be provided to the Contractor and/or in the Table of Contents.

Materials or Work described in words that so applied have a well-known technical or trade meaning shall be deemed to refer to recognized standards, unless noted otherwise.

Trade Name or Trade Term. It is not the intention of this Contract to go into detailed descriptions of any materials and/or methods commonly known to the trade under "trade name" or "trade term." The mere mention or notation of "trade name" or "trade term" shall be considered a sufficient notice to Contractor that it will be required to complete the work so named, complete, finished, and operable, with all its appurtenances, according to the best practices of the trade.

The naming of any material and/or equipment shall mean furnishing and installing of same, including all incidental and accessory items thereto and/or labor therefor, as per best practices of the trade(s) involved, unless specifically noted otherwise.

Contract Documents are complementary, and what is called for by one shall be binding as if called for by all. As such, Drawings and Specifications are intended to be fully cooperative and to agree. However, if Contractor observes that Drawings and Specifications are in conflict with the Contract Documents, Contractor shall promptly notify District and Architect in writing, and any necessary changes shall be made as provided in the Contract Documents.

In the case of discrepancy or ambiguity in the Contract Documents, the order of precedence in the Agreement shall prevail. However, in the case of discrepancy or ambiguity solely between and among the Drawings and Specifications, the discrepancy or ambiguity shall be resolved in favor of the interpretation that will provide District with the functionally complete and operable Project described in the Drawings and Specifications. In case of ambiguity, conflict, or lack of information, District will furnish clarifications with reasonable promptness.

Drawings and Specifications are intended to comply with all laws, ordinances, rules, and regulations of constituted authorities having jurisdiction, and where referred to in the Contract Documents, the laws, ordinances, rules, and regulations shall be considered as a part of the Contract within the limits specified. Contractor shall bear all expense of correcting work done contrary to said laws, ordinances, rules, and regulations.

As required by Section 4-317(c), Part 1, Title 24, CCR: "Should any existing conditions such as deterioration or non-complying construction be discovered which is not covered by the DSA-approved documents wherein the finished work will not comply with Title 24, California Code of Regulations, a construction change document, or a separate set of plans and specifications, detailing and specifying the required repair work shall be submitted to and approved by DSA before proceeding with the repair work."

Ownership of Drawings

All copies of Plans, Drawings, Designs, Specifications, and copies of other incidental architectural and engineering work, or copies of other Contract Documents furnished by District, are the property of District. They are not to be used by Contractor in other work and, with the exception of signed sets of Contract Documents, are to be returned to District on request at completion of Work, or may be used by District as it may require without any additional costs to District. Neither the Contractor nor any Subcontractor, or material or equipment supplier shall own or claim a copyright in the Drawings, Specifications, and other documents prepared by the Architect. District hereby grants the Contractor, Subcontractors, sub-subcontractors, and material or equipment suppliers a limited license to use applicable portions of the Drawings prepared for the Project in the execution of their Work under the Contract Documents.

10. CONTRACTOR'S SUBMITTALS AND SCHEDULES

Contractor's submittals shall comply with the provisions and requirements of the Specifications including, without limitation Submittals.

10.1. Schedule of Work, Schedule of Submittals, and Schedule of Values

10.1.1. Within **TEN (10)** calendar days after the date of the Notice to Proceed (unless otherwise specified in the Specifications), the Contractor shall prepare and submit to the District for review, in a form supported by sufficient data to substantiate its accuracy as the District may require:

10.1.1.1.Preliminary Schedule. A preliminary schedule of construction indicating the starting and completion dates of the various stages of the Work, including any information and following any form as may be specified in the Specifications. Once approved by District, this shall become the Construction Schedule. This schedule shall include and identify all tasks that are on the Project's critical path with a specific determination of the start and completion of each critical path task as well as all Contract milestones and each milestone's completion date(s) as may be required by the District.

10.1.1.1.1.The District is not required to approve a preliminary schedule of construction with early completion, i.e., one that shows early completion dates for the Work and/or milestones. Contractor shall not be entitled to extra compensation if the District approves a Construction Schedule with an early completion date and Contractor completes the Project beyond the date shown in the schedule but within the Contract Time. A Construction Schedule showing the Work completed in less than the Contract Time, the time between the early completion date and the end of the Contract Time shall be Float.

10.1.1.2.Preliminary Schedule of Values. A preliminary schedule of values for all of the Work, which must include quantities and prices of items aggregating the Contract Price and must subdivide the Work into component parts in sufficient detail to serve as the basis for progress payments during construction. Unless the Special Conditions contain different limits, this preliminary schedule of values shall include, at a minimum, the following information and the following structure:

10.1.1.2.1.Divided into at least the following categories:

10.1.1.2.1.1.Overhead and profit;
10.1.1.2.1.2.Supervision;
10.1.1.2.1.3.General conditions;
10.1.1.2.1.4.Layout;
10.1.1.2.1.5.Mobilization;
10.1.1.2.1.6.Submittals;
10.1.1.2.1.7.Bonds and insurance;
10.1.1.2.1.8.Close-out/Certification documentation;
10.1.1.2.1.9.Demolition;
10.1.1.2.1.10.Installation;
10.1.1.2.1.11.Rough-in;
10.1.1.2.1.12.Finishes;
10.1.1.2.1.13.Testing;
10.1.1.2.1.14.Punchlist and District acceptance.

10.1.1.2.2.And also divided by each of the following areas:

10.1.1.2.2.1.Site work;
10.1.1.2.2.2.By each building;
10.1.1.2.2.3.By each floor.

10.1.1.2.3.The preliminary schedule of values shall not provide for values any greater than the following percentages of the Contract value:

10.1.1.2.3.1. Mobilization and layout combined to equal not more than 1%;
10.1.1.2.3.2. Submittals, samples and shop drawings combined to equal not more than 3%;
10.1.1.2.3.3. Bonds and insurance combined to equal not more than 2.5%.
10.1.1.2.3.4. Closeout documentation shall have a value in the preliminary schedule of not less than 3%.

10.1.1.2.4.Notwithstanding any provision of the Contract Documents to the contrary, payment of the Contractor's overhead, supervision, general conditions costs, and profit, as reflected in the Cost Breakdown, shall be paid based on percentage complete, with the disbursement of Progress Payments and the Final Payment.

10.1.1.2.5.Contractor shall certify that the preliminary schedule of values as submitted to the District is accurate and reflects the costs as developed in preparing Contractor's bid. For example, without limiting the foregoing, Contractor shall not "front-load" the preliminary schedule of values with dollar amounts greater than the value of activities performed early in the Project.

10.1.1.2.6.The preliminary schedule of values shall be subject to the District's review and approval of the form and content thereof. In the event that the District objects to any portion of the preliminary schedule of values, the District shall notify the Contractor, in writing, of the District's objection(s) to the preliminary schedule of values. Within five (5) calendar days of the date of the District's written objection(s), Contractor shall submit a revised preliminary schedule of values to the District for review and approval. The foregoing procedure for the preparation, review and approval of the preliminary schedule of values shall continue until the District has approved the entirety of the preliminary schedule of values.

10.1.1.2.7.Once the preliminary schedule of values is approved by the District, this shall become the Schedule of Values. The Schedule of Values shall not be thereafter modified or amended by the Contractor without the prior consent and approval of the District, which may be granted or withheld in the sole discretion of the District.

10.1.1.3.**Preliminary Schedule of Submittals.** A preliminary schedule of submittals, including Shop Drawings, Product Data, and Samples submittals. Once approved by District, this shall become the Submittal Schedule. All submittals shall be forwarded to the District by the date indicated on the approved Submittal Schedule, unless an earlier date is necessary to maintain the Construction Schedule, in which case those submittals shall be forwarded to the District so as not to delay the Construction Schedule. Upon request by the District, Contractor shall provide an electronic copy of all submittals to the District. All submittals shall be submitted no later than 90 days after the Notice to Proceed.

10.1.1.4.**Safety Plan.** Contractor's Safety Plan specifically adapted for the Project. Contractor's Safety Plan shall comply with the following requirements:

10.1.1.4.1.All applicable requirements of California Division of Occupational Safety and Health ("CalOSHA") and/or of the United States Occupational Safety and Health Administration ("OSHA").

10.1.1.4.2.All provisions regarding Project safety, including all applicable provisions in these General Conditions.

10.1.1.4.3.Contractor's Safety Plan shall be in English and in the language(s) of the Contractor's and its Subcontractors' employees.

10.1.1.5.**Update Registered Subcontractors List.** The name, address, telephone number, facsimile number, California State Contractors License number, classification, DIR registration number and monetary value of all Subcontracts of any tier for parties furnishing labor, material, or equipment for completion of the Project.

10.1.2. Contractor must provide all schedules both in hard copy and electronically, in a format (e.g., Microsoft Project or Primavera) approved in advance by the District.

10.1.3. The District will review the schedules submitted and the Contractor shall make changes and corrections in the schedules as requested by the District and resubmit the schedules until approved by the District.

10.1.4. The District shall have the right at any time to revise the schedule of values if, in the District's sole opinion, the schedule of values does not accurately reflect the value of the Work performed.

10.1.5. All schedules must be approved by the District before Contractor can rely on them as a basis for payment.

10.2. Monthly Progress Schedule(s)

10.2.1. Contractor shall provide Monthly Progress Schedule(s) to the District. A Monthly Progress Schedule shall update the approved Construction Schedule or the last Monthly Progress Schedule, showing all work completed and to be completed as well as updating the Registered Subcontractors List. The monthly Progress Schedule shall be sent within the timeframe requested by the District and shall be in a format acceptable to the District and contain a written narrative of the progress of work that month and any changes, delays, or events that may affect the work. The process for District approval of the Monthly Progress Schedule shall be the same as the process for approval of the Construction Schedule.

10.2.2. Contractor shall submit Monthly Progress Schedule(s) with all payment applications.

10.2.3. Contractor must provide all schedules both in hard copy and electronically, in a format (e.g., Microsoft Project or Primavera) approved in advance by the District.

10.2.4. The District will review the schedules submitted and the Contractor shall make changes and corrections in the schedules as requested by the District and resubmit the schedules until approved by the District.

10.2.5. The District shall have the right at any time to revise the schedule of values if, in the District's sole opinion, the schedule of values does not accurately reflect the value of the Work performed.

10.2.6. All schedules must be approved by the District before Contractor can rely on them as a basis for payment.

10.3. Material Safety Data Sheets (MSDS)

Contractor is required to ensure Material Safety Data Sheets are available in a readily accessible place at the Site for any material requiring a Material Safety Data Sheet per the federal "Hazard Communication" standard, or employees' "right to know" law. The Contractor is also required to ensure proper labeling on substances brought onto the job site and that any person working with the material or within the general area of the material is informed of the hazards of the substance and follows proper handling and protection procedures. Two additional copies of the Material Safety Data Sheets shall also be submitted directly to the District.

10.4. Submittals

10.4.1. Architect's favorable review shall neither be construed as a complete check nor relieve the Contractor, Subcontractor, manufacturer, fabricator, or supplier from responsibility for any deficiency that may exist or from any departures or deviations from the requirements of the Contract Documents unless the Contractor has, in writing, called Architect's attention to the deviations at the time of submission and the Architect has given specific written response. "Favorable review" shall mean merely that Architect has no objection to Contractor using, upon Contractor's own full responsibility, plan or method of Work proposed, or furnishing materials or equipment proposed.

11. SITE ACCESS, CONDITIONS, AND REQUIREMENTS

11.1. Site Investigation

Before bidding on this Work, Contractor shall make a careful investigation of the Site and thoroughly familiarize itself with the requirements of the Contract. By the act of submitting a bid for the Work included in this Contract, Contractor shall be deemed to have made a complete study and investigation, and to be familiar with and accepted the existing conditions of the Site.

Prior to commencing the Work, Contractor and the District's representative shall survey the Site to document the condition of the Site. Contractor will record the survey in digital videotape format and provide an electronic copy to the District within fourteen (14) days of the survey. This electronic record shall serve as a basis for determining any damages caused by the Contractor during the Project. The Contractor may also document any pre-existing conditions in writing, provided that both the Contractor and the District's representative agree on said conditions and sign a memorandum documenting the same.

11.2. Soils Investigation Report

11.2.1. When a soils investigation report obtained from test holes at Site or for the Project is available, that report may be available to the Contractor but shall not be a part of this Contract and shall not alleviate or excuse the Contractor's obligation to perform its own investigation. Any information obtained from that report or any information given on Drawings as to subsurface soil condition or to elevations of existing grades or elevations of underlying rock is approximate only, is not guaranteed, does not form a part of this Contract, and Contractor may not rely thereon. By submitting its bid, Contractor acknowledges that it

has made visual examination of Site and has made whatever tests Contractor deems appropriate to determine underground condition of soil. Although any such report is not a part of this Contract, recommendations from the report may be included in the Drawings, Specifications, or other Contract Documents. It is Contractor's sole responsibility to thoroughly review all Contract Documents, Drawings, and Specifications.

11.2.2. Contractor agrees that no claim against District will be made by Contractor for damages and hereby waives any rights to damages if, during progress of Work, Contractor encounters subsurface or latent conditions at Site materially differing from those shown on Drawings or indicated in Specifications, or for unknown conditions of an unusual nature that differ materially from those ordinarily encountered in the work of the character provided for in Plans and Specifications, except as indicated in the provisions of these General Conditions regarding trenches, trenching, and/or existing utility lines.

11.3. <u>Access to Work</u>

District and its representatives shall at all times have access to Work wherever it is in preparation or progress, including storage and fabrication. Contractor shall provide safe and proper facilities for such access so that District's representatives may perform their functions.

11.4. <u>Layout and Field Engineering</u>

11.4.1. All field engineering required for layout of this Work and establishing grades for earthwork operations shall be furnished by Contractor at its expense. This Work shall be done by a qualified, California-registered civil engineer approved in writing by District and Architect. Any required Record and/or As-Built Drawings of Site development shall be prepared by the approved civil engineer.

11.4.2. The Contractor shall be responsible for having ascertained pertinent local conditions such as location, accessibility, and general character of the Site and for having satisfied itself as to the conditions under which the Work is to be performed. Contractor shall follow best practices, including but not limited to potholing to avoid utilities. District shall not be liable for any claim for allowances because of Contractor's error, failure to follow best practices, or negligence in acquainting itself with the conditions at the Site.

11.4.3. Contractor shall protect and preserve established benchmarks and monuments and shall make no changes in locations without the prior written approval of District. Contractor shall replace any benchmarks or monuments that are lost or destroyed subsequent to proper notification of District and with District's approval.

11.5. <u>Utilities</u>

Utilities shall be provided as indicated in the Specifications.

11.6. <u>Sanitary Facilities</u>

Sanitary facilities shall be provided as indicated in the Specifications.

11.7. Surveys

Contractor shall provide surveys done by a California-licensed civil engineer surveyor to determine locations of construction, grading, and site work as required to perform the Work.

11.8. Regional Notification Center

The Contractor, except in an emergency, shall contact the appropriate regional notification center at least two (2) days prior to commencing any excavation if the excavation will be conducted in an area or in a private easement that is known, or reasonably should be known, to contain subsurface installations other than the underground facilities owned or operated by the District, and obtain an inquiry identification number from that notification center. No excavation shall be commenced and/ or carried out by the Contractor unless an inquiry identification number has been assigned to the Contractor or any Subcontractor and the Contractor has given the District the identification number. Any damages arising from Contractor's failure to make appropriate notification shall be at the sole risk and expense of the Contractor. Any delays caused by failure to make appropriate notification shall be at the sole risk of the Contractor and shall not be considered for an extension of the Contract Time.

11.9. Existing Utility Lines

11.9.1. Pursuant to Government Code section 4215, District assumes the responsibility for removal, relocation, and protection of main or trunk utility lines and facilities located on the construction Site at the time of commencement of construction under this Contract with respect to any such utility facilities that are not identified in the Plans and Specifications. Contractor shall not be assessed for liquidated damages for delay in completion of the Project caused by failure of District or the owner of a utility to provide for removal or relocation of such utility facilities.

11.9.2. Locations of existing utilities provided by District shall not be considered exact but approximate within a reasonable margin and shall not relieve Contractor of responsibilities to exercise reasonable care or costs of repair due to Contractor's failure to do so. District shall compensate Contractor for the costs of locating, repairing damage not due to the failure of Contractor to exercise reasonable care, and removing or relocating such utility facilities not indicated in the Plans and Specifications with reasonable accuracy, and for equipment necessarily idle during such work.

11.9.3. No provision herein shall be construed to preclude assessment against Contractor for any other delays in completion of the Work. Nothing in this Article shall be deemed to require District to indicate the presence of existing service laterals, appurtenances, or other utility lines, within the exception of main or trunk utility lines or whenever the presence of these utilities on the Site of the construction Project can be inferred from the presence of other visible facilities, such as buildings, meter junction boxes, on or adjacent to the Site of the construction.

11.9.4. If Contractor, while performing Work under this Contract, discovers utility facilities not identified by District in Contract Plans and Specifications, Contractor shall immediately notify the District and the utility in writing. The cost of repair for damage to above-mentioned discovered facilities without prior written notification to the District shall be borne by the Contractor.

11.10. Notification

Contractor understands, acknowledges and agrees that the purpose for prompt notification to the District pursuant to these provisions is to allow the District to investigate the condition(s) so that the District shall have the opportunity to decide how the District desires to proceed as a result of the condition(s). Accordingly, failure of Contractor to promptly notify the District in writing, pursuant to these provisions, shall constitute Contractor's waiver of any claim for damages or delay incurred as a result of the condition(s).

11.11. Hazardous Materials

Contractor shall comply with all provisions and requirements of the Contract Documents related to hazardous materials including, without limitation, Hazardous Materials Procedures and Requirements.

11.12. No Signs

Neither the Contractor nor any other person or entity shall display any signs not required by law or the Contract Documents at the Site, fences trailers, offices, or elsewhere on the Site without specific prior written approval of the District.

12. TRENCHES

12.1. Trenches Greater Than Five Feet

Pursuant to Labor Code section 6705, if the Contract Price exceeds $25,000 and involves the excavation of any trench or trenches five (5) feet or more in depth, the Contractor shall, in advance of excavation, promptly submit to the District and/or a registered civil or structural engineer employed by the District or Architect, a detailed plan, stamped by a licensed engineer retained by the Contractor, showing the design of shoring for protection from the hazard of caving ground during the excavation of such trench or trenches.

12.2. Excavation Safety

If such plan varies from the Shoring System Standards established by the Construction Safety Orders, the plan shall be prepared by a registered civil or structural engineer, but in no case shall such plan be less effective than that required by the Construction Safety Orders. No excavation of such trench or trenches shall be commenced until said plan has been accepted by the District or by the person to whom authority to accept has been delegated by the District.

12.3. No Tort Liability of District

Pursuant to Labor Code section 6705, nothing in this Article shall impose tort liability upon the District or any of its employees.

12.4. No Excavation without Permits

The Contractor shall not commence any excavation Work until it has secured all necessary permits including the required CalOSHA excavation/shoring permit. Any permits shall be prominently displayed on the Site prior to the commencement of any excavation.

12.5. Discovery of Hazardous Waste and/or Unusual Conditions

12.5.1. Pursuant to Public Contract Code section 7104, if the Work involves digging trenches or other excavations that extend deeper than four feet below the Surface, the Contractor shall promptly, and before the following conditions are disturbed, notify the District, in writing, of any:

12.5.1.1.Material that the Contractor believes may be material that is hazardous waste, as defined in section 25117 of the Health and Safety Code, is required to be removed to a Class I, Class II, or Class III disposal site in accordance with provisions of existing law.

12.5.1.2.Subsurface or latent physical conditions at the Site differing from those indicated.

12.5.1.3.Unknown physical conditions at the Site of any unusual nature, different materially from those ordinarily encountered and generally recognized as inherent in work of the character provided for in the Contract.

12.5.2. The District shall promptly investigate the conditions, and if it finds that the conditions do materially so differ, or do involve hazardous waste, and cause a decrease or increase in the Contractor's cost of, or the time required for, performance of any part of the Work, shall issue a Change Order under the procedures described herein.

12.5.3. In the event that a dispute arises between District and the Contractor whether the conditions materially differ, or involve hazardous waste, or cause a decrease or increase in the Contractor's cost of, or time required for, performance of any part of the Work, the Contractor shall not be excused from any scheduled completion date provided for by the Contract, but shall proceed with all work to be performed under the Contract. The Contractor shall retain any and all rights provided either by Contract or by law that pertain to the resolution of disputes and protests.

13. INSURANCE AND BONDS

13.1. Insurance

Unless different provisions and/or limits are indicated in the Special Conditions, all insurance required of Contractor and/or its Subcontractor(s) shall be at least as broad as the amounts and include the provisions set forth herein.

13.1.1. Commercial General Liability and Automobile Liability Insurance

13.1.1.1.Contractor shall procure and maintain, during the life of this Contract, Commercial General Liability Insurance and Automobile Liability Insurance in a form at least as broad as Insurance Services (ISO) Form CG 00 01 that shall protect Contractor, its agents, representative, employees, or subcontractors, District, State, Construction Manager(s), Project Inspector(s), and Architect(s) from all claims for products and completed operations, property damage, bodily injury and personal injury, death, advertising injury, and medical payments arising from, or in connection with, the performance of the Work of the Project within the Contract Documents at the required limits, or Contractor shall procure and maintain these coverages separately. Contractor shall procure and maintain Automobile Liability Insurance in a form at least as broad as ISO Form CA 0001 covering Code 1 (any

auto) at the required limits, or Contractor shall procure and maintain these coverages separately.

13.1.1.2.Contractor's deductible or self-insured retention for its Commercial General Liability Insurance policy shall not exceed five thousand dollars ($5,000) for deductible or twenty-five thousand dollars ($25,000) for self-insured retention, respectively, unless approved in writing by District.

13.1.1.3.All such policies shall be written on an occurrence form.

13.1.2. <u>Excess Liability Insurance</u>

13.1.2.1.If Contractor's underlying policy limits are less than required, subject to the District's sole discretion, Contractor may procure and maintain, during the life of this Contract, an Excess Liability Insurance Policy to meet the policy limit requirements of the required policies in order to satisfy, in the aggregate with its underlying policy, the insurance requirements herein including, but not limited to, primary and non-contributory, additional insured, Self-Insured Retentions (SIRs), indemnity, and defense requirements. The Excess Liability Insurance Policy shall be provided on a true "following form" or broader coverage basis, with coverage at least as broad as provided on the underlying Commercial General Liability insurance. No insurance policies maintained by the Additional Insureds, whether primary or excess, and which also apply to a loss covered hereunder, shall be called upon to contribute to a loss until Contractor's primary and excess liability policies are exhausted.

13.1.2.2.There shall be no gap between the per occurrence amount of any underlying policy and the start of the coverage under the Excess Liability Insurance Policy. Any Excess Liability Insurance Policy shall be written on a following form and shall protect Contractor, District, State, Construction Manager(s), Project Manager(s), and Architect(s) in amounts and including the provisions as set forth in the Supplementary Conditions (if any) and/or Special Conditions, and that complies with all requirements for Commercial General Liability and Automobile Liability and Employers' Liability Insurance.

13.1.2.3.The District, in its sole discretion, may accept the Excess Liability Insurance Policy that brings Contractor's primary limits to the minimum requirements herein.

13.1.3. **<u>Subcontractor(s):</u>** Contractor shall require its Subcontractor(s), if any, to procure and maintain Commercial General Liability Insurance, Automobile Liability Insurance, and Excess Liability Insurance (if Subcontractor elects to satisfy, in part the insurance required herein by procuring and maintaining an Excess Liability Insurance Policy) with minimum limits at least equal to the amount required of Contractor except where smaller minimum limits are permitted as set forth below. For Commercial General Liability coverage, subcontractors shall provide coverage with a form at least as broad as CG 20 38 04 13.

13.1.4. Workers' Compensation and Employers' Liability Insurance

13.1.4.1.In accordance with provisions of section 3700 of the California Labor Code, the Contractor and every Subcontractor shall be required to secure the payment of compensation to its employees.

13.1.4.2.Contractor shall procure and maintain, during the life of this Contract, Workers' Compensation Insurance and Employers' Liability Insurance for all of its employees engaged in work under this Contract, on/or at the Site of the Project. This coverage shall cover, at a minimum, medical and surgical treatment, disability benefits, rehabilitation therapy, and survivors' death benefits. Contractor shall require its Subcontractor(s), if any, to procure and maintain Workers' Compensation Insurance and Employers' Liability Insurance for all employees of Subcontractor(s). Any class of employee or employees not covered by a Subcontractor's insurance shall be covered by Contractor's insurance. If any class of employee or employee engaged in Work under this Contract, on or at the Site of the Project, is not protected under the Workers' Compensation Insurance, Contractor shall provide, or shall cause a Subcontractor to provide, adequate insurance coverage for the protection of any employee(s) not otherwise protected before any of those employee(s) commence work.

13.1.4.3.The Workers' Compensation policy shall be endorsed with a waiver of subrogation in favor of District for all work performed by Contractor, its employees, agents and subcontractors.

13.1.5. Builder's Risk Insurance: Builder's Risk "All Risk" Insurance

Contractor shall procure and maintain, during the life of this Contract, Builder's Risk (Course of Construction) insurance utilizing an "All Risk" (Special Perils) coverage form, with limits equal to the completed value of the Project and no coinsurance penalty provisions. The cost value basis shall be consistent with the total replacement cost of all insurable Work of the Project included within the Contract Documents. Coverage is to insure against all risks of accidental physical loss and shall include without limitation the perils of vandalism and/or malicious mischief (both without any limitation regarding vacancy or occupancy), sprinkler leakage, civil authority, theft, sonic disturbance, earthquake, flood, collapse, wind, rain, dust, fire, war, terrorism, lightning, smoke, and rioting. Coverage shall include debris removal, demolition, increased costs due to enforcement of all applicable ordinances and/or laws in the repair and replacement of damaged and undamaged portions of the property, and reasonable costs for the Architect's and engineering services and expenses required as a result of any insured loss upon the Work and Project, including completed Work and Work in progress, to the full insurable value thereof.

13.1.6. Pollution Liability Insurance

13.1.6.1.Contractor shall procure and maintain Pollution Liability Insurance in a form at least as broad as ISO Form CG 2415 that shall protect Contractor, District, State, Construction Manager(s), Project Inspector(s), and Architect(s) from all claims for bodily injury, property damage, including natural resource damage, cleanup costs, removal, storage, disposal, and/ or use of the pollutant arising from operations under this Contract, and defense, including costs and expenses incurred in the investigation, defense, or settlement of claims, or Contractor shall procure and maintain these coverages separately. Coverage shall apply to sudden and/or gradual pollution conditions resulting from the escape or release of smoke,

vapors, fumes, acids, alkalis, toxic chemicals, liquids, or gases, natural gas, waste materials, or other irritants, contaminants, or pollutants, including asbestos.

13.1.6.2.Contractor warrants that any retroactive date applicable to coverage under the policy shall predate the effective date of the Contract and that continuous coverage will be maintained or an extended reporting or discovery period will be exercised for a period of three (3) years, beginning from the time that the Work under the Contract is completed.

13.1.6.3.If the services involve lead-based paint or asbestos identification/ remediation, Contractor's Pollution Liability policy shall not contain lead-based paint or asbestos exclusions. If the services involve mold identification/ remediation, Contractor's Pollution Liability policy shall not contain a mold exclusion, and the definition of Pollution shall include microbial matter, including mold.

13.1.6.4.If Contractor is responsible for removing any pollutants from a site, then Contractor shall ensure that Any Auto, including owned, non-owned, and hired, is included within the above policies and at the required limits, to cover its automobile exposure from transporting the pollutants from the site to an approved disposal site. This coverage shall include the Motor Carrier Act Endorsement, MCS 90.

13.1.7. <u>Proof of Insurance and Other Requirements: Endorsements and Certificates</u>

13.1.7.1.Contractor shall not commence Work nor shall it allow any Subcontractor to commence Work under this Contract, until Contractor and its Subcontractor(s) have procured all required insurance and Contractor has delivered in duplicate to the District complete endorsements (or entire insurance policies) and certificates indicating the required coverages have been obtained, and the District has approved these documents.

13.1.7.2.Endorsements, certificates, and insurance policies shall include the following:

13.1.7.2.1.A clause stating the following, or other language acceptable to the District:

"This policy shall not be canceled until written notice to District, Architect, and Construction Manager stating date of the cancellation by the insurance carrier. Date of cancellation may not be less than thirty (30) days after date of mailing notice."

13.1.7.2.2.Language stating in particular those insured, extent of insurance, location and operation to which insurance applies, expiration date, to whom cancellation and reduction notice will be sent, and length of notice period.

13.1.7.2.3.All endorsements, certificates and insurance policies shall state that District, its trustees, employees and agents, the State of California, Construction Manager(s), Project Manager(s), Inspector(s) and Architect(s) are named additional insureds under all policies except Workers' Compensation Insurance and Employers' Liability Insurance. General liability coverage can be provided in the form of an endorsement to the Contractor's insurance (at least as broad as ISO Form CG 20 10, CG 11 85 or **both** CG 20 10, CG 20 26, CG 20 33, or CG 20 38; **<u>and</u>** CG 20 37 forms if later revisions used).

13.1.7.2.4.All endorsements shall waive any right to subrogation against any of the named additional insureds.

13.1.7.2.5.Contractor's and Subcontractors' insurance coverage at least as broad as ISO CG 20 01 04 13 shall be primary and non-contributory to any insurance or self-insurance maintained by District, its trustees, employees and/or agents, the State of California, Construction Manager(s), Project Manager(s), Inspector(s), and/or Architect(s). This requirement shall also apply to any Excess liability policies.

13.1.7.2.6.Contractor's insurance limit shall apply separately to each insured against whom a claim is made or suit is brought.

13.1.7.3.No policy shall be amended, canceled or modified, and the coverage amounts shall not be reduced, until Contractor or Contractor's broker has provided written notice to District, Architect(s), and Construction Manager(s) stating date of the amendment, modification, cancellation or reduction, and a description of the change. Date of amendment, modification, cancellation or reduction may not be less than thirty (30) days after date of mailing notice.

13.1.7.4.Insurance written on a "claims made" basis shall be retroactive to a date that coincides with or precedes Contractor's commencement of Work, including subsequent policies purchased as renewals or replacements. Said policy is to be renewed by the Contractor and all Subcontractors for a period of five (5) years following completion of the Work or termination of this Agreement. Such insurance must have the same coverage and limits as the policy that was in effect during the term of this Agreement and will cover the Contractor and all Subcontractors for all claims made. If coverage is cancelled or non-renewed, and not replaced with another claims-made policy from with a retroactive date prior to the effective date of this Agreement, or the start of Work date, the Contractor must purchase extended reporting period coverage for a minimum of five (5) years after completion of contract work. A copy of the claims reporting requirements must be submitted to the District for review.

13.1.7.5.Contractor's and Subcontractors' insurance policy(s) shall be primary and non-contributory to any insurance or self-insurance maintained by District, its Board Members, employees and/or agents, the State of California, Construction Manager(s), Project Manager(s), Inspector(s), and/or Architect(s).

13.1.7.6.Unless otherwise stated in the Special Conditions, all of Contractor's insurance shall be with insurance companies with an A.M. Best rating of no less than **A: VII**.

13.1.7.7.The insurance requirements set forth herein shall in no way limit the Contractor's liability arising out of or relating to the performance of the Work or related activities.

13.1.7.8.Failure of Contractor and/or its Subcontractor(s) to comply with the insurance requirements herein shall be deemed a material breach of the Contract.

[REMAINDER OF PAGE LEFT BLANK INTENTIONALLY]

13.1.8. Insurance Policy Limits

13.1.8.1.Unless different limits are indicated in the Special Conditions, the limits of insurance shall not be less than the following amounts:

Commercial General Liability	Product Liability and Completed Operations, Fire Damage Liability – Split Limit	$2,000,000 per occurrence; $4,000,000 aggregate
Automobile Liability	Any Auto – Combined Single Limit	$1,000,000
Workers' Compensation		Statutory limits pursuant to State law
Employers' Liability		$1,000,000 per accident for bodily injury or disease
Builder's Risk (Course of Construction)		Full replacement value for scope of Work
Pollution Liability		$1,000,000 per claim; $2,000,000 aggregate

13.1.8.2.If Contractor normally carries insurance in an amount greater than the minimum amounts required by District, that greater amount shall become the minimum required amount of insurance for purposes of the Contract. Therefore, Contractor hereby acknowledges and agrees that all insurance carried by it shall be deemed liability coverage for all actions it performs in connection with the Contract.

13.2. Contract Security - Bonds

13.2.1. Contractor shall furnish two surety bonds issued by a California admitted surety insurer as follows:

13.2.1.1.Performance Bond: A bond in an amount at least equal to one hundred percent (100%) of Contract Price as security for faithful performance of this Contract.

13.2.1.2.Payment Bond: A bond in an amount at least equal to one hundred percent (100%) of the Contract Price as security for payment of persons performing labor and/or furnishing materials in connection with this Contract.

13.2.2. Cost of bonds shall be included in the Bid and Contract Price.

13.2.3. All bonds related to this Project shall be in the forms set forth in these Contract Documents and shall comply with all requirements of the Contract Documents, including, without limitation, the bond forms.

14. WARRANTY/GUARANTEE/INDEMNITY

14.1. Warranty/Guarantee

14.1.1. The Contractor shall obtain and preserve for the benefit of the District, manufacturer's warranties on materials, fixtures, and equipment incorporated into the Work.

14.1.2. In addition to guarantees required elsewhere, Contractor shall, and hereby does guarantee and warrant all Work furnished on the job against all defects for a period of **ONE (1)** year after the later of the following dates, unless a longer period is provided for in the Contract Documents:

14.1.2.1.The acceptance by the District's governing board of the Work, subject to these General Conditions, or

14.1.2.2.The date that commissioning for the Project, if any, was completed.

At the District's sole option, Contractor shall repair or replace any and all of that Work, together with any other Work that may be displaced in so doing, that may prove defective in workmanship and/or materials within a **ONE (1)** year period from date of completion as defined above, unless a longer period is provided for in the Contract Documents, without expense whatsoever to District. In the event of failure of Contractor and/or Surety to commence and pursue with diligence said replacements or repairs within ten (10) days after being notified in writing, Contractor and Surety hereby acknowledge and agree that District is authorized to proceed to have defects repaired and made good at expense of Contractor and/or Surety who hereby agree to pay costs and charges therefore immediately on demand.

14.1.3. If, in the opinion of District, defective work creates a dangerous condition or requires immediate correction or attention to prevent further loss to District or to prevent interruption of District operations, District will attempt to give the notice required above. If Contractor or Surety cannot be contacted or neither complies with District's request for correction within a reasonable time as determined by District, District may, notwithstanding the above provision, proceed to make any and all corrections and/or provide attentions the District believes are necessary. The costs of correction or attention shall be charged against Contractor and Surety of the guarantees provided in this Article or elsewhere in this Contract.

14.1.4. The above provisions do not in any way limit the guarantees on any items for which a longer guarantee is specified or on any items for which a manufacturer gives a guarantee for a longer period. Contractor shall furnish to District all appropriate guarantee or warranty certificates as indicated in the Specifications or upon request by District.

14.1.5. Nothing herein shall limit any other rights or remedies available to District.

14.2. Indemnity and Defense

14.2.1. To the furthest extent permitted by California law, the Contractor shall indemnify, keep and hold harmless the District, the Architect(s), and the Construction Manager(s), their respective consultants, separate contractors, board members, officers, representatives,

agents, and employees, in both individual and official capacities ("Indemnitees"), against all suits, claims, injury, damages, losses, and expenses ("Claims"), including but not limited to attorney's fees, caused by, arising out of, resulting from, or incidental to the performance of the Work under this Contract by the Contractor, its Subcontractors, vendors, or suppliers. However, the Contractor's indemnification and hold harmless obligation shall be reduced by the proportion of the Indemnitees' and/or Architect's liability to the extent the Claim(s) is/ are caused by the active negligence or willful misconduct of the Indemnitees, and/or defects in design furnished by the Architect, as found by a court or arbitrator of competent jurisdiction. This indemnification and hold harmless obligation of the Contractor shall not be construed to negate, abridge, or otherwise reduce any right or obligation of indemnity that would otherwise exist or arise as to any Indemnitee or other person described herein. This indemnification and hold harmless obligation includes, but is not limited to, any failure or alleged failure by Contractor to comply with any provision of law, any failure or alleged failure to timely and properly fulfill all of its obligations under the Contract Documents in strict accordance with their terms, and without limitation, any failure or alleged failure of Contractor's obligations regarding any stop payment notice actions or liens, including Civil Wage and Penalty Assessments and/or Orders by the DIR.

14.2.2. To the furthest extent permitted by California law, Contractor shall also defend Indemnitees, at its own expense, including but not limited to attorneys' fees and costs, against all Claims caused by, arising out of, resulting from, or incidental to the performance of the Work under this Contract by the Contractor, its Subcontractors, vendors, or suppliers. However, without impacting Contractor's obligation to provide an immediate and ongoing defense of Indemnitees, the Contractor's defense obligation shall be retroactively reduced by the proportion of the Indemnitees' and/or Architect's liability to the extent caused by the active negligence or willful misconduct of the Indemnitees, and/or defects in design furnished by the Architect, as found by a court or arbitrator of competent jurisdiction. The District shall have the right to accept or reject any legal representation that Contractor proposes to defend the Indemnitees. If a conflict-of-interest bars joint representation of Contractor and Indemnitees, District shall have the right to select its own counsel, subject to Contractor's reasonable right of rejection. If any Indemnitee provides its own defense due to failure to timely respond to tender of defense, rejection of tender of defense, or conflict of interest of proposed counsel, Contractor shall reimburse such Indemnitee for any expenditures. Even if the Contractor assumes the defense of the District with acceptable counsel, the District, at its sole option, may participate in the defense, at its own expense, with counsel of its own choice without relieving the Contractor of any of its obligations hereunder. Contractor's defense obligation shall not be construed to negate, abridge, or otherwise reduce any right or obligation of defense that would otherwise exist as to any Indemnitee or other person described herein. Contractor's defense obligation includes, but is not limited to, any failure or alleged failure by Contractor to comply with any provision of law, any failure or alleged failure to timely and properly fulfill all of its obligations under the Contract Documents in strict accordance with their terms, and without limitation, any failure or alleged failure of Contractor's obligations regarding any stop payment notice actions or liens, including Civil Wage and Penalty Assessments and/or Orders by the DIR. The Contractor shall give prompt notice to the District in the event of any Claim(s).

14.2.3. Without limitation of the provisions herein, if the Contractor's obligation to indemnify and hold harmless the Indemnitees or its obligation to defend Indemnitees as provided herein shall be determined to be void or unenforceable, in whole or in part, it is the intention of the parties that these circumstances shall not otherwise affect the validity or

enforceability of the Contractor's agreement to indemnify, defend, and hold harmless the rest of the Indemnitees, as provided herein. Further, the Contractor shall be and remain fully liable on its agreements and obligations herein to the fullest extent permitted by law.

14.2.4. Pursuant to Public Contract Code section 9201, the District shall provide timely notification to Contractor of the receipt of any third-party Claim relating to this Contract. The District shall be entitled to recover its reasonable costs incurred in providing said notification.

14.2.5. In any and all Claims against any of the Indemnitees by any employee of the Contractor, any Subcontractor, anyone directly or indirectly employed by any of them or anyone for whose acts any of them may be liable, the Contractor's indemnification obligation herein shall not be limited in any way by any limitation on the amount or type of damages, compensation, or benefits payable by or for the Contractor or any Subcontractor under workers' compensation acts, disability benefit acts, or other employee benefit acts.

14.2.6. The District may retain so much of the moneys due the Contractor as shall be considered necessary, until disposition of any such Claims or until the District, Architect(s) and Construction Manager(s) have received written agreement from the Contractor that they will unconditionally defend the District, Architect(s) and Construction Manager(s), their respective officers, agents and employees, and pay any damages due by reason of settlement or judgment.

14.2.7. The Contractor's defense and indemnification obligations hereunder shall survive the completion of Work, the warranty/guarantee period, and the termination of the Contract.

15. TIME

15.1. Notice to Proceed

15.1.1. District may issue a Notice to Proceed within ninety (90) days from the date of the Notice of Award. Once Contractor has received the Notice to Proceed, Contractor shall complete the Work within the period of time indicated in the Contract Documents.

15.1.2. In the event that the District desires to postpone issuing the Notice to Proceed beyond ninety (90) days from the date of the Notice of Award, it is expressly understood that with reasonable notice to the Contractor, the District may postpone issuing the Notice to Proceed. It is further expressly understood by Contractor that Contractor shall not be entitled to any claim of additional compensation as a result of the postponement of the issuance of the Notice to Proceed.

15.1.3. If the Contractor believes that a postponement of issuance of the Notice to Proceed will cause a hardship to Contractor, Contractor may terminate the Contract. Contractor's termination due to a postponement shall be by written notice to District within ten (10) days after receipt by Contractor of District's notice of postponement. It is further understood by Contractor that in the event that Contractor terminates the Contract as a result of postponement by the District, the District shall only be obligated to pay Contractor for the Work that Contractor had performed at the time of notification of postponement. Should

Contractor terminate the Contract as a result of a notice of postponement, District shall have the authority to award the Contract to the next lowest responsive responsible bidder.

15.2. Computation of Time / Adverse Weather

15.2.1. The Contractor will only be allowed a time extension for Adverse Weather conditions if requested by Contractor in compliance with the time extension request procedures and only if all of the following conditions are met:

15.2.1.1.The weather conditions constitute Adverse Weather, as defined herein;

15.2.1.2.Contractor can verify that the Adverse Weather caused delays in excess of five (5) hours of the indicated labor required to complete the scheduled tasks of Work on the day affected by the Adverse Weather;

15.2.1.3.The Contractor's crew is dismissed as a result of the Adverse Weather;

15.2.1.4.Said delay adversely affects the critical path in the Construction Schedule; and

15.2.1.5.Exceeds twelve (12) days of delay per year.

15.2.2. If the aforementioned conditions are met, a non-compensable day-for-day extension will only be allowed for those days in excess of those indicated herein.

15.2.3. The Contractor shall work seven (7) days per week, if necessary, irrespective of inclement weather, to maintain access and the Construction Schedule, and to protect the Work under construction from the effects of Adverse Weather, all at no further cost to the District.

15.2.4. The Contract Time has been determined with consideration given to the average climate weather conditions prevailing in the County in which the Project is located.

15.3. Hours of Work

15.3.1. Sufficient Forces

Contractor and Subcontractors shall continuously furnish sufficient and competent work forces with the required levels of familiarity with the Project and skill, training and experience to ensure the prosecution of the Work in accordance with the Construction Schedule.

15.3.2. Performance During Working Hours

Work shall be performed during regular working hours as permitted by the appropriate governmental agency except that in the event of an emergency, or when required to complete the Work in accordance with job progress, Work may be performed outside of regular working hours with the advance written consent of the District and approval of any required governmental agencies.

15.3.3. **No Work during State Testing**

Contractor shall, at no additional cost to the District and at the District's request, coordinate its Work to not disturb District students including, without limitation, not performing any Work when students at the Site are taking State or Federally-required tests. The District or District's Representative will provide Contractor with a schedule of test dates concurrent with the District's issuance of the Notice to Proceed, or as soon as test dates are made available to the District.

15.4. Progress and Completion

15.4.1. Time of the Essence

Time limits stated in the Contract Documents are of the essence to the Contract. By executing the Agreement, the Contractor confirms that the Contract Time is a reasonable period for performing the Work.

15.4.2. No Commencement Without Insurance or Bonds

The Contractor shall not commence operations on the Project or elsewhere prior to the effective date of insurance and bonds. The date of commencement of the Work shall not be changed by the effective date of such insurance or bonds. If Contractor commences Work without insurance and bonds, all Work is performed at Contractor's peril and shall not be compensable until and unless Contractor secures bonds and insurance pursuant to the terms of the Contract Documents and subject to District claim for damages.

15.5. Schedule

Contractor shall provide to District, Construction Manager, and Architect a schedule in conformance with the Contract Documents and as required in the Notice to Proceed and the Contractor's Submittals and Schedules section of these General Conditions.

15.6. Expeditious Completion

The Contractor shall proceed expeditiously with adequate forces and shall achieve Completion within the Contract Time.

16. EXTENSIONS OF TIME – LIQUIDATED DAMAGES

16.1. Liquidated Damages

Contractor and District hereby agree that the exact amount of damages for failure to complete the Work within the time specified is extremely difficult or impossible to determine. If the Work is not

completed within the time specified in the Contract Documents, it is understood that the District will suffer damage. It being impractical and unfeasible to determine the amount of actual damage, it is agreed the Contractor shall pay to District as fixed and liquidated damages, and not as a penalty, the amount set forth in the Agreement for each calendar day of delay in completion. Contractor and its Surety shall be liable for the amount thereof pursuant to Government Code section 53069.85.

16.2. <u>Excusable Delay</u>

16.2.1. Contractor shall not be charged for liquidated damages because of any delays in completion of the Work which are not the fault of Contractor or its Subcontractors, including adverse weather delays, strikes, acts of God as defined in Public Contract Code section 7105, acts of enemy, epidemics, and quarantine restrictions. Contractor shall, within five (5) calendar days of beginning of any delay, including a Force Majeure event, notify District in writing of causes of delay including documentation and facts explaining the delay and the direct correlation between the cause and effect ("Notice of Delay"). District shall review the facts and extent of any delay and shall grant extension(s) of time for completing Work when, in its judgment, the findings of fact justify an extension. Extension(s) of time shall apply only to that portion of Work affected by delay and shall not apply to other portions of Work not so affected. An extension of time may only be granted if Contractor has timely submitted the Construction Schedule as required herein.

16.2.2. Contractor's Notice of Delay and request for a time extension pursuant to subparagraph 16.2 is a condition precedent to Contractor's submittal of and/or entitlement to a claim pursuant to Article 25 of these Construction Provisions. Contractor shall notify the District pursuant to the Claims Process provisions in these General Conditions of any anticipated delay and its cause. Following submission of a claim, the District may determine whether the delay is to be considered avoidable or unavoidable, how long it continues, and to what extent the prosecution and completion of the Work might be delayed thereby.

16.2.3. In the event the Contractor requests an extension of Contract Time for unavoidable delay, such request shall be submitted in accordance with the provisions in the Contract Documents governing changes in Work. When requesting time, requests must be submitted with full justification and documentation. If the Contractor fails to submit justification, it waives its right to a time extension at a later date. Such justification must be based on the official Construction Schedule as updated at the time of occurrence of the delay or execution of Work related to any changes to the Scope of Work. Any claim for delay must include the following information as support, without limitation:

16.2.3.1.The duration of the activity relating to the changes in the Work and the resources (manpower, equipment, material, etc.) required to perform the activities within the stated duration.

16.2.3.2.Specific logical ties to the Contract Schedule for the proposed changes and/or delay showing the activity/activities in the Construction Schedule that are affected by the change and/or delay. In particular, Contractor must show an actual impact to the schedule, after making a good faith effort to mitigate the delay by rescheduling the work, by providing an analysis of the schedule ("Time Impact Analysis"). Such Time Impact Analysis shall describe in detail the cause and effect of the delay and the impact on the critical dates in the Project schedule and main sequence of schedule activities to enable District to evaluate the impact of changed Work to the scheduled critical path. (This information must be provided for any

portion of any delay of seven (7) days or more.) The Contractor shall be responsible for all costs associated with the preparation of Time Impact Analyses.

16.2.4. A recovery schedule must be submitted within twenty (20) calendar days of written notification to the District of causes of delay to recover the lost time within seven (7) calendar days. As part of this submittal, the Contractor shall provide a written narrative for each revision made to recapture the lost time. If the revisions include sequence changes, the Contractor shall provide a schedule diagram comparing the original sequence to the revised sequence of work. The revisions shall not be incorporated into any schedule update until the revisions have been reviewed by District. At District's discretion, the Contractor can be required to provide Subcontractor certifications for revisions affecting said Subcontractors.

16.2.5. Contractor must comply with requirements in subsection 16.2 for a Notice of Delay and supporting justification notwithstanding if Contractor contends the specific delay period is unknown and continuing. When submitting a Notice of Delay and supporting justification, Contractor must provide an estimated delay duration to critical path activities at the time the Notice of Delay and supporting justification is required to be submitted. Failure of the Contractor to perform in accordance with the current schedule update shall not be excused by submittal of a Notice of Delay. If Contractor contends the delaying event(s) are continuing, Contractor must update monthly the estimated delay period with supporting justification.

16.2.6. Contractor's failure to timely submit a written Notice of Delay and/or provide the justification required in subparagraph 16.2 shall constitute Contractor's waiver of any right to later submit a Proposed Change Order or pursue a Claim on the circumstances giving rise to the request, or to later pursue any additional money or time extensions in any manner related to that issue, regardless of the merits because the Contractor will not have satisfied a condition precedent or exhausted administrative remedies required to show entitlement to a Contract Time adjustment. Contractor acknowledges that these written notices and justification requirements are critically important to District's Work, Project management, and evaluating potential options and alternatives to implement mitigation efforts to reduce or eliminate additional Project costs and delays.

16.3. <u>No Additional Compensation for Delays Within Contractor's Control</u>

16.3.1. Contractor is aware that governmental agencies, including, without limitation, the Division of the State Architect, the Department of General Services, gas companies, electrical utility companies, water districts, and other agencies may have to approve Contractor-prepared drawings or approve a proposed installation. Accordingly, Contractor shall include in its bid, time for possible review of its drawings and for reasonable delays and damages that may be caused by such agencies. Thus, Contractor is not entitled to make a claim for damages or delays arising from the review of Contractor's drawings.

16.3.2. Contractor shall only be entitled to compensation for delay when all of the following conditions are met:

16.3.2.1.The District is responsible for the delay;

16.3.2.2.The delay is unreasonable under the circumstances involved;

16.3.2.3.The delay was not within the contemplation of the District and Contractor;

16.3.2.4.The delay could not have been avoided or mitigated by Contractor's reasonable diligence; and

16.3.2.5.Contractor timely complies with the claims procedure of the Contract Documents.

16.3.3. Where an event for which District is responsible impacts the projected Completion Date, the Contractor shall provide a written mitigation plan, including a schedule diagram, which explains how (e.g., increase crew size, overtime, etc.) the impact can be mitigated. The Contractor shall also include a detailed cost breakdown of the labor, equipment, and material the Contractor would expend to mitigate District-caused time impact. The Contractor shall submit its mitigation plan to District within fourteen (14) calendar days from the date of discovery of the impact. The Contractor is responsible for the cost to prepare the mitigation plan.

16.3.4. Where a change in the Work extends the Contract Time, Contractor may request and recover additional, actual direct costs, provided that Contractor can demonstrate such additional costs are:

16.3.4.1.Actually incurred performing the Work;

16.3.4.2.Not compensated by the Markup allowed; and

16.3.4.3.Directly result from the extended Contract Time.

16.3.5. Contractor shall comply with all required procedures, documentation and time requirements in the Contract Documents. Contractor may not seek or recover such costs using formulas (e.g. Eichleay, labor factors). No time will be granted under this Contract for cumulative effect of changes.

16.4. <u>Force Majeure</u>

"Force Majeure" means any event or circumstance unknown at the time of contracting that is beyond the parties' control and makes performance of the contract impractical or impossible. The Party seeking to have its performance obligation(s) excused must demonstrate that there was such an insuperable interference occurring without the party's intervention as could not have been prevented by the exercise of prudence, diligence, and care, by providing prompt notice to the other Party, including full particulars of such event, of its inability to perform its obligations due to such event, following commencement of the claiming Party's inability to so perform its obligations. To the extent satisfying these conditions, Force Majeure events include the following: acts of God, war, civil unrest, epidemic, fire, smoke, volcanic eruption, earthquake, strike, unusually severe weather, flood, or shortage of transportation facilities, lock out, or commandeering of materials, product, plant, or facilities by the government. Force Majeure shall not be based on a Party's financial inability to perform under this Agreement unless there exists extreme and unreasonable difficulty, expense, injury, or loss involved. A Force Majeure event does not include an act of negligence or intentional wrongdoing by a Party. Any Party claiming a Force Majeure event shall use reasonable diligence to remove the condition that prevents performance and shall not be entitled to suspend performance of its obligations in any greater scope or for any longer duration than is required by the Force Majeure event. Each Party shall use its best efforts to mitigate the effects of such Force Majeure

event, remedy its inability to perform, and resume full performance of its obligations hereunder. No obligation that arose before the Force Majeure event that could and should have been fully performed before such Force Majeure event is excused as a result of such Force Majeure event.

16.5. Float or Slack in the Schedule

Float or slack is the amount of time between the early start date and the late start date, or the early finish date and the late finish date, of any of the activities in the schedule. Float or slack is not for the exclusive use of or benefit of either the District or the Contractor, but its use shall be determined solely by the District.

17. CHANGES IN THE WORK

17.1. No Changes Without Authorization

17.1.1. There shall be no change whatsoever in the Drawings, Specifications, or in the Work without an executed Change Order or a written Construction Change Directive authorized by the District as herein provided. District shall not be liable for the cost of any extra work or any substitutions, changes, additions, omissions, or deviations from the Drawings and Specifications unless the District's governing board has authorized the same and the cost thereof has been approved in writing by Change Order or Construction Change Directive in advance of the changed Work being performed. No extension of time for performance of the Work shall be allowed hereunder unless claim for such extension is made at the time changes in the Work are ordered, and such time duly adjusted and approved in writing in the Change Order or Construction Change Directive. Contractor shall be responsible for any costs incurred by the District for professional services and DSA fees and/or delay to the Project Schedule, if any, for DSA to review any request for changes to the DSA approved plans and specifications for the convenience of the Contractor and/or to accommodate the Contractor’s means and methods. The provisions of the Contract Documents shall apply to all such changes, additions, and omissions with the same effect as if originally embodied in the Drawings and Specifications.

17.1.2. Contractor shall perform immediately all work that has been authorized by a fully executed Change Order or Construction Change Directive. Contractor shall be fully responsible for any and all delays and/or expenses caused by Contractor's failure to expeditiously perform this Work.

17.1.3. Should any Change Order result in an increase in the Contract Price or extend the Contract Time, the cost of or length of extension in that Change Order shall be agreed to, in writing, by the District in advance of the Work by Contractor and shall be subject to the monetary limitations set forth in Public Contract Code section 20118.4. In the event that Contractor proceeds with any change in Work without a Change Order executed by the District or Construction Change Directive, Contractor waives any claim of additional compensation or time for that additional work. Under no circumstances shall Contractor be entitled to any claim of additional compensation or time not expressly requested by Contractor in a Proposed Change Order or approved by District in an executed Change Order.

17.1.4. A Change Order or Construction Change Directive will become effective when approved by the Board, notwithstanding that Contractor has not signed it. A Change Order or Construction Change Directive will become effective without Contractor’s signature

provided District indicates it as a "Unilateral Change Order". Any dispute as to the adjustment in the Contract Price or Contract Time, if any, of the Unilateral Change Order shall be resolved pursuant to the Payments and Claims Process provisions herein.

17.1.5. Contractor understands, acknowledges, and agrees that the reason for District authorization is so that District may have an opportunity to analyze the Work and decide whether the District shall proceed with the Change Order or alter the Project so that a change in Work becomes unnecessary.

17.2. Architect Authority

The Architect will have authority to order minor changes in the Work not involving any adjustment in the Contract Price, or an extension of the Contract Time, or a change that is inconsistent with the intent of the Contract Documents. These changes shall be effected by written Change Order, Construction Change Directive, by Architect's response(s) to RFI(s), or by Architect's Supplemental Instructions ("ASI").

17.3. Price Request

17.3.1. Definition of Price Request

A Price Request is a written request prepared by the Architect requesting the Contractor to submit to the District and the Architect an estimate of the effect of a proposed change in the Work on the Contract Price and the Contract Time.

17.3.2. Scope of Price Request

A Price Request shall contain adequate information, including any necessary Drawings and Specifications, to enable Contractor to provide the cost breakdowns required herein. The Contractor shall not be entitled to any additional compensation for preparing a response to a Price Request, whether ultimately accepted or not.

17.4. Change Orders

17.4.1. A Change Order is a written instrument prepared and issued by the District and/or the Architect and signed by the District (as authorized by the District's Governing Board), the Contractor, the Architect, and approved by the Project Inspector (if necessary) and DSA (if necessary), stating their agreement regarding all of the following:

17.4.1.1.A description of a change in the Work;

17.4.1.2.The amount of the adjustment in the Contract Price, if any; and

17.4.1.3.The extent of the adjustment in the Contract Time, if any.

17.5. Proposed Change Order

17.5.1. Definition of Proposed Change Order

A Proposed Change Order ("PCO") is a written request prepared by the Contractor requesting that the District and the Architect issue a Change Order based upon a proposed change to the Work.

17.5.2. Changes in Contract Price

A PCO shall include breakdowns and backup documentation pursuant to the revisions herein and sufficient, in the District's judgment, to validate any change in Contract Price. In no case shall Contractor or any of its Subcontractors be permitted to reserve rights for additional compensation for Change Order Work.

17.5.3. Changes in Time

A PCO shall also include any changes in time required to complete the Project. Any additional time requested shall not be the number of days to make the proposed change but must be based upon the impact to the Construction Schedule as defined in the Contract Documents. The Contractor shall justify the proposed change in time by submittal of a schedule analysis that accurately shows the impact of the change on the critical path of the Construction Schedule ("Time Impact Analysis"). If Contractor fails to request a time extension in a PCO, including the Time Impact Analysis, then the Contractor is thereafter precluded from requesting, and waives any right to request, additional time and/or claim a delay. In no case shall Contractor or any of its Subcontractors be permitted to reserve rights for additional time for Change Order Work. A PCO that leaves the amount of time requested blank, or states that such time requested is "to be determined", is not permitted and shall also constitute a waiver of any right to request additional time and/or claim a delay.

17.5.4. Allowances

If there is an Allowance, then Contractor shall not bill for or be due any portion of an Allowance unless the District has identified specific work, Contractor has submitted a price for that work or the District has proposed a price for that work, the District has accepted the cost for that work, and the District has executed an Allowance Expenditure Directive incorporating that work. Allowance Expenditure Directives shall be based on Contractor's costs, without overhead and profit, for products, delivery, installation, labor, insurance, payroll, taxes, bonding and equipment rental will be included in Allowance Expenditure Directive authorizing expenditure of funds from the Allowance. No overhead and profit shall be added to the Allowance Expenditure Directive.

Any unused portion of the Allowance will revert to the District documented by a deductive Change Order. Contractor authorizes the District to execute a unilateral deductive Change Order at or near the end of the Project for all or any portion of the Allowance not allocated.

17.5.5. Unknown and/or Unforeseen Conditions

Separate from what is provided in the Allowance, if Contractor requests an increase in Contract Price and/or Contract Time that is based at least partially on Contractor's assertion that Contractor has encountered unknown and/or unforeseen condition(s) on the Project, then Contractor shall base the PCO on provable information that, beyond a reasonable doubt and to

the District's satisfaction, demonstrates that the unknown and/or unforeseen condition(s) were actually unknown and/or unforeseen and that the condition(s) were reasonably unknown and/or unforeseen. If not, the District shall deny the PCO as unsubstantiated, and the Contractor shall complete the Project without any increase in Contract Price and/or Contract Time based on that PCO.

17.5.6. <u>Time to Submit Proposed Change Order</u>

Contractor shall submit its PCO, using Document 00 63 57 (Proposed Change Order Form), within five (5) working days of the date Contractor discovers, or reasonably should have discovered, the circumstances giving rise to the PCO, unless additional time to submit a PCO is granted in writing by the District. Time is of the essence in Contractor's submission of PCOs so that the District can promptly investigate the basis for the PCO. Accordingly, if Contractor fails to submit its PCO within this timeframe, Contractor waives, releases, and discharges any right to assert or claim any entitlement to an adjustment of the Contract Price and/or Time based on circumstances giving rise to the PCO.

17.5.7. <u>Proposed Change Order Certification</u>

In submitting a PCO, Contractor certifies and affirms that the cost and/or time request is submitted in good faith, that the cost and/or time request is accurate and in accordance with the provisions of the Contract Documents, and the Contractor submits the cost and/or request for extension of time recognizing the significant civil penalties and treble damages which follow from making a false claim or presenting a false claim under Government Code section 12650 et seq.

It is expressly understood that the value of the extra Work or changes expressly includes any and all of the Contractor's costs and expenses, direct and indirect, resulting from additional time required on the Project or resulting from delay to the Project including, without limitation, cumulative impacts. Contractor is not entitled to separately recover amounts for overhead or other indirect costs. Any costs, expenses, damages, or time extensions not included are deemed waived.

[THE REMAINDER OF THIS PAGE LEFT BLANK INTENTIONALLY]

17.6.Format for Proposed Change Order

17.6.1.The following format shall be used as applicable by the District and the Contractor (e.g. Change Orders, PCO's) to communicate proposed additions and deductions to the Contract, supported by attached documentation. Any spaces left blank will be deemed no change to cost or time.

	WORK PERFORMED OTHER THAN BY CONTRACTOR	**ADD**	**DEDUCT**
	Material (attach suppliers' invoice or itemized quantity and unit cost plus sales tax)		
	Add Labor (attach itemized hours and rates, fully Burdened, and specify the hourly rate for each additional labor burden, for example, payroll taxes, fringe benefits, etc.)		
	Add Equipment (attach suppliers' invoice)		
	Subtotal		
	Add Overhead and Profit for any and all Tiers of Subcontractor, the total not to exceed ten percent (10%) of Item (d)		
	Subtotal		
	Add General Conditions Cost (if Time is Compensable) (attach supporting documentation)		
	Subtotal		
	Add Overhead and Profit for Contractor, not to exceed five percent (5%) of Item (h)		
	Subtotal		
	Add Bond and Insurance, not to exceed two and one-half percent (2.5%) of Item (j)		
	TOTAL		
	Time (zero unless indicated; "TBD" not permitted)	**_____ Calendar Days**	

[REMAINDER OF THIS PAGE LEFT BLANK INTENTIONALLY]

	WORK PERFORMED BY CONTRACTOR	**ADD**	**DEDUCT**
	Material (attach itemized quantity and unit cost plus sales tax)		

	Add Labor (attach itemized hours and rates, fully Burdened, and specify the hourly rate for each additional labor burden, for example, payroll taxes, fringe benefits, etc.)		
	Add Equipment (attach suppliers' invoice)		
	Add General Conditions Cost (if Time is Compensable) (attach supporting documentation)		
	Subtotal		
	Add Overhead and Profit for Contractor, not to exceed fifteen percent (15%) of Item (e)		
	Subtotal		
	Add Bond and Insurance, not to exceed two and one-half percent (2.5%) of Item (g)		
	TOTAL		
	Time (zero unless indicated; "TBD" not permitted)	**_____ Calendar Days**	

17.6.2. **Mandatory Use of Forms.** Contractor shall only submit PCOs by completing Document 00 63 57 (Proposed Change Order Form). Contractor acknowledges and agrees that use of this specific and consistent format is essential to District's evaluation of PCOs. Accordingly, Contractor waives, releases, and discharges any right to assert or claim any entitlement to an adjustment of the Contract Price and/or Time for any purported PCO that does not comply with Document 00 63 57 (Proposed Change Order Form).

17.6.3. **Labor**. Contractor shall be compensated for the costs of labor actually and directly utilized in the performance of the Work. Such labor costs shall be the actual cost, use of any formulas (e.g. labor factors) is not allowed, not to exceed prevailing wage rates established by the bid advertisement date or when the Contract was awarded, whichever is applicable, in the locality of the Site and shall be in the labor classification(s) necessary for the performance of the Work, fully Burdened. Labor costs shall exclude costs incurred by the Contractor in preparing estimate(s) of the costs of the change in the Work, in the maintenance of records relating to the costs of the change in the Work, coordination and assembly of materials and information relating to the change in the Work or performance thereof, or the supervision and other overhead and general conditions costs associated with the change in the Work or performance thereof, including but not limited to the cost for the job superintendent. If applicable, District will pay Contractor the reasonable costs for room and board, supported with appropriate backup documentation, without markup for profit or overhead as provided by U.S. General Services Administration per diem rates for California lodging, meals and incidentals, https://www.gsa.gov/travel/plan-book/per-diem-rates/per-diem-rates-lookup.

17.6.4. **Materials**. Contractor shall be compensated for the costs of materials necessarily and actually used or consumed in connection with the performance of the change in the Work. Costs of materials may include reasonable costs of transportation from a source

closest to the Site of the Work and delivery to the Site. If discounts by material suppliers are available for materials necessarily used in the performance of the change in the Work, they shall be credited to the District. If materials necessarily used in the performance of the change in the Work are obtained from a supplier or source owned in whole or in part by the Contractor, compensation therefor shall not exceed the current wholesale price for such materials. If, in the reasonable opinion of the District, the costs asserted by the Contractor for materials in connection with any change in the Work are excessive, or if the Contractor fails to provide satisfactory evidence of the actual costs of such materials from its supplier or vendor of the same, the costs of such materials and the District's obligation to pay for the same shall be limited to the then lowest wholesale price at which similar materials are available in the quantities required to perform the change in the Work. The District may elect to furnish materials for the change in the Work, in which event the Contractor shall not be compensated for the costs of furnishing such materials or any mark-up thereon.

17.6.5. **Equipment**. As a precondition to the District's duty to pay for Equipment rental or loading and transportation, Contractor shall provide satisfactory evidence of the actual costs of Equipment from the supplier, vendor or rental agency of same. Contractor shall be compensated for the actual cost of the necessary and direct use of Equipment in the performance of the change in the Work. Use of such Equipment in the performance of the change in the Work shall be compensated in increments of fifteen (15) minutes. Rental time for Equipment moved by its own power shall include time required to move such Equipment to the site of the Work from the nearest available rental source of the same. If Equipment is not moved to the Site by its own power, Contractor will be compensated for the loading and transportation costs in lieu of rental time. The foregoing notwithstanding, neither moving time or loading and transportation time shall be allowed if the Equipment is used for performance of any portion of the Work other than the change in the Work. Unless prior approval in writing is obtained by the Contractor from the Architect, the Project Inspector and the District, no costs or compensation shall be allowed for time while Construction Equipment is inoperative, idle or on standby, for any reason. Contractor shall not be entitled to an allowance or any other compensation for Equipment or tools used in the performance of change in the Work where such Equipment or tools have a replacement value of $500.00 or less. Equipment costs claimed by the Contractor in connection with the performance of any Work shall not exceed rental rates established by distributors or construction equipment rental agencies in the locality of the Site; any costs asserted which exceed such rental rates shall not be allowed or paid. Unless otherwise specifically approved in writing by the Architect, the Project Inspector and the District, the allowable rate for the use of Equipment in connection with the Work shall constitute full compensation to the Contractor for the cost of rental, fuel, power, oil, lubrication, supplies, necessary attachments, repairs or maintenance of any kind, depreciation, storage, insurance, labor (exclusive of labor costs of the Equipment operator), and any and all other costs incurred by the Contractor incidental to the use of such Equipment.

17.6.6. **General Conditions Cost**. The phrase "General Conditions Cost" shall mean, other than expressly limited or excluded herein, the costs of Contractor during the construction phase, including but not limited to: payroll costs for project manager for Work conducted at the Site, payroll costs for the superintendent and full-time general foremen, workers not included as direct labor costs engaged in support functions (e.g., loading/unloading, clean-up), costs of offices and temporary facilities including office materials, office supplies, office equipment, minor expenses, utilities, fuel, sanitary facilities and telephone services at the

Site, costs of consultants not in the direct employ of Contractor or Subcontractors, and fees for permits and licenses.

17.6.7. **Overhead and Profit**. The phrase "Overhead and Profit" shall include field and office supervisors and assistants, watchperson, use of small tools, consumable, insurance other than construction bonds and insurance required herein, general conditions costs and home office expenses.

17.7. <u>Change Order Certification</u>

17.7.1. All Change Orders and PCOs include the following certification by the Contractor, either in the form specifically or incorporated by this reference:

17.7.1.1.The undersigned Contractor approves the foregoing as to the changes, if any, to the Contract Price specified for each item, and as to the extension of time allowed, if any, for completion of the entire Work as stated herein, and agrees to furnish all labor, materials, and service, and perform all work necessary to complete any additional work specified for the consideration stated herein. Submission of sums which have no basis in fact or which Contractor knows are false are at the sole risk of Contractor and may be a violation of the False Claims Act set forth under Government Code section 12650 et seq. It is understood that the changes herein to the Contract shall only be effective when approved by the governing board of the District.

17.7.1.2.It is expressly understood that the value of the extra Work or changes expressly includes any and all of the Contractor's costs and expenses, direct and indirect, resulting from additional time required on the Project or resulting from delay to the Project including, without limitation, cumulative impacts. Contractor is not entitled to separately recover amounts for overhead or other indirect costs. Any costs, expenses, damages, or time extensions not included are deemed waived.

17.7.2. Accord and Satisfaction: Contractor's execution of any Change Order shall constitute a full accord and satisfaction, and release, of all Contractor (and if applicable, Subcontractor) claims for additional time, money or other relief arising from or relating to the subject matter of the change including, without limitation, impacts of all types, cumulative impacts, inefficiency, overtime, delay and any other type of claim.

17.7.3. **Mandatory Use of Forms.** Contractor shall only submit Change Orders by completing Document 00 63 63 (Change Order Form). Contractor acknowledges and agrees that use of this specific and consistent format is essential to District's processing of Change Orders. Accordingly, Contractor waives, releases, and discharges any right to assert or claim any entitlement to an adjustment of the Contract Price and/or Time for any change that does not comply with Document 00 63 63 (Change Order Form).

17.8. <u>Determination of Change Order Cost</u>

17.8.1. The amount of the increase or decrease in the Contract Price from a Change Order, if any, shall be determined in one or more of the following ways as applicable to a specific situation and at the District's discretion:

17.8.1.1. District acceptance of a PCO;

17.8.1.2. By unit prices contained in Contractor's original bid;

17.8.1.3. By agreement between District and Contractor.

17.9. Deductive Change Orders

All deductive Change Order(s) must be prepared pursuant to the provisions herein. Where a portion of the Work is deleted from the Contract, the reasonable value of the deducted work less the value of work performed shall be considered the appropriate deduction. The value submitted on the Schedule of Values shall be used to calculate the credit amount unless the bid documentation is being held in escrow as part of the Contract Documents. Unit Prices, if any, may be used in District's discretion in calculating reasonable value. If Contractor offers a proposed amount for a deductive Change Order(s), Contractor shall include a minimum of five percent (5%) total profit and overhead to be deducted with the amount of the work of the Change Order(s). If Subcontractor work is involved, Subcontractors shall also include a minimum of five percent (5%) profit and overhead to be deducted with the amount of its deducted work. Any deviation from this provision shall not be allowed.

17.10. Addition or Deletion of Alternate Bid Item(s)

If the Bid Form and Proposal includes proposal(s) for Alternate Bid Item(s), during Contractor's performance of the Work, the District may elect to add or delete any such Alternate Bid Item(s) if not included in the Contract at the time of award. If the District elects to add or delete Alternate Bid Item(s) after Contract award, the cost or credit for such Alternate Bid Item(s) shall be as set forth in the Bid Form and Proposal unless the parties agree to a different price and the Contract Time shall be adjusted by the number of days allocated in the Contract Documents. If days are not allocated in the Contract Documents, the Contract Time shall be equitably adjusted.

17.11. Discounts, Rebates, and Refunds

For purposes of determining the cost, if any, of any change, addition, or omission to the Work hereunder, all trade discounts, rebates, refunds, and all returns from the sale of surplus materials and equipment shall accrue and be credited to the Contractor, and the Contractor shall make provisions so that such discounts, rebates, refunds, and returns may be secured, and the amount thereof shall be allowed as a reduction of the Contractor's cost in determining the actual cost of construction for purposes of any change, addition, or omission in the Work as provided herein.

17.12. Construction Change Directives

17.12.1. A Construction Change Directive is a written order prepared and issued by the District, the Construction Manager, and/or the Architect and signed by the District and the Architect, directing a change in the Work. The District may, as provided by law, by Construction Change Directive and without invalidating the Contract, order changes in the Work consisting of additions, deletions, or other revisions. The adjustment to the Contract Price or Time, if any, is subject to the provisions of this section regarding Changes in the Work. If all or a portion of the Project is being funded by funds requiring approval by the State Allocation Board ("SAB"), these revisions may be subject to compensation once approval of same is received and funded by the SAB, and funds are released by the Office of Public School Construction ("OPSC"). Any dispute as to the adjustment in the Contract Price,

if any, of the Construction Change Directive or timing of payment shall be resolved pursuant to the Payments and Claims Process provisions herein.

17.12.2. The District may issue a Construction Change Directive in the absence of agreement on the terms of a Change Order.

17.13. <u>Force Account Directives</u>

17.13.1. When work, for which a definite price has not been agreed upon in advance, is to be paid for on a force account basis, all direct costs necessarily incurred and paid by the Contractor for labor, material, and equipment used in the performance of that Work, shall be subject to the approval of the District and compensation will be determined as set forth herein.

17.13.2. The District will issue a Force Account Directive to proceed with the Work on a force account basis, and a not-to-exceed budget will be established by the District.

17.13.3. All requirements regarding direct cost for labor, labor burden, material, equipment, and markups on direct costs for overhead and profit described in this section shall apply to Force Account Directives. However, the District will only pay for actual costs verified in the field by the District or its authorized representative(s) on a daily basis.

17.13.4. The Contractor shall be responsible for all cost related to the administration of Force Account Directive. The markup for overhead and profit for Contractor modifications shall be full compensation to the Contractor to administer Force Account Directive, and Contractor shall not be entitled to separately recover additional amounts for overhead and/or profit.

17.13.5. The Contractor shall notify the District or its authorized representative(s) at least twenty-four (24) hours prior to proceeding with any of the force account work. Furthermore, the Contractor shall notify the District when it has consumed eighty percent (80%) of the budget, and shall not exceed the budget unless specifically authorized in writing by the District. The Contractor will not be compensated for force account work in the event that the Contractor fails to timely notify the District regarding the commencement of force account work, or exceeding the force account budget.

17.13.6. The Contractor shall diligently proceed with the work, and on a daily basis, submit a daily force account report using Document 00 63 47, "Daily Force Account Report," no later than 5:00 p.m. each day. The report shall contain a detailed itemization of the daily labor, material, and equipment used on the force account work only. The names of the individuals performing the force account work shall be included on the daily force account reports. The type and model of equipment shall be identified and listed. The District will review the information contained in the reports, and sign the reports no later than the next work day, and return a copy of the report to the Contractor for their records. The District will not sign, nor will the Contractor receive compensation for work the District cannot verify. The Contractor will provide a weekly force account summary indicating the status of each Force Account Directive in terms of percent complete of the not-to-exceed budget and the estimated percent complete of the work.

17.13.7. In the event the Contractor and the District reach a written agreement on a set cost for the work while the work is proceeding based on a Force Account Directive, the

Contractor's signed daily force account reports shall be discontinued, and all previously signed reports shall be invalid.

17.14. Accounting Records

With respect to portions of the Work performed by Change Orders and Construction Change Directives, the Contractor shall keep and maintain cost-accounting records satisfactory to the District, including, without limitation, Job Cost Reports as provided in these General Conditions, which shall be available to the District on the same terms as any other books and records the Contractor is required to maintain under the Contract Documents. Such records shall include without limitation hourly records for Labor and Equipment and itemized records of materials and Equipment used that day in connection with the performance of any Work. All records maintained hereunder shall be subject to inspection, review and/or reproduction by the District, the Architect or the Project Inspector upon request. In the event that the Contractor fails or refuses, for any reason, to maintain or make available for inspection, review and/or reproduction such records, the District's reasonable good faith determination of the extent of adjustment to the Contract Price shall be final, conclusive, dispositive and binding upon Contractor.

17.15. Notice Required

If the Contractor desires to make a claim for an increase in the Contract Price, or any extension in the Contract Time for completion, it shall notify the District pursuant to the provisions herein including, without limitation, Article 25 Claims Process provisions. No claim shall be considered unless made in accordance with this subparagraph. Contractor shall proceed to execute the Work even though the adjustment may not have been agreed upon. Any change in the Contract Price or extension of the Contract Time resulting from such claim shall be authorized by a Change Order.

17.16. Applicability to Subcontractors

Any requirements under this Article shall be equally applicable to Change Orders or Construction Change Directives issued to Subcontractors by the Contractor to the extent as required by the Contract Documents.

17.17. Alteration to Change Order Language

Contractor shall not alter Change Orders or reserve time in Change Orders. Change Orders altered in violation of this provision, if in conflict with the terms set forth herein, shall be construed in accordance with the terms set forth herein. Contractor shall execute finalized Change Orders and proceed under the provisions herein with proper notice.

17.18. Failure of Contractor to Execute Change Order

Contractor shall be in default of the Contract if Contractor fails to execute a Change Order when the Contractor agrees with the addition and/or deletion of the Work in that Change Order.

18. REQUEST FOR INFORMATION

Any Request for Information shall reference all applicable Contract Document(s), including Specification section(s), detail(s), page number(s), drawing number(s), and sheet number(s), etc. The Contractor shall make suggestions and interpretations of the issue raised by each Request for Information. A Request for Information cannot modify the Contract Price, Contract Time, or the Contract Documents. Upon request by the District, Contractor shall provide an electronic copy of the Request for Information in addition to the hard copy.

The Contractor shall be responsible for any costs incurred for professional services that District may deduct from any amounts owing to the Contractor, if a Request for Information requests an interpretation or decision of a matter where the information sought is equally available to the party making the request. District, at its sole discretion, shall deduct from and/or invoice Contractor for all the professional services arising herein.

19. PAYMENTS

19.1. Contract Price

The Contract Price is stated in the Agreement and, including authorized adjustments, is the total amount payable by the District to the Contractor for performance of the Work under the Contract Documents.

19.2. Applications for Progress Payments

19.2.1. Procedure for Applications for Progress Payments

19.2.1.1. Application for Progress Payment

19.2.1.1.1.Not before the fifth (5th) day of each calendar month during the progress of the Work, Contractor shall submit to the District and the Architect an itemized Application for Payment for operations completed in accordance with the Schedule of Values. Such application shall be notarized, if required, and supported by the following or each portion thereof unless waived by the District in writing:

19.2.1.1.1.1.The amount paid to the date of the Application to the Contractor, to all its Subcontractors, and all others furnishing labor, material, or equipment for its Contract;

19.2.1.1.1.2.The amount being requested under the Application for Payment by the Contractor on its own behalf and separately stating the amount requested on behalf of each of the Subcontractors and all others furnishing labor, material, and equipment under the Contract;

19.2.1.1.1.3.The balance that will be due to each of such entities after said payment is made;

19.2.1.1.1.4.A certification that the As-Built Drawings and annotated Specifications are current;

19.2.1.1.1.5.Itemized breakdown of work done for the purpose of requesting partial payment;

19.2.1.1.1.6.An updated and acceptable construction schedule in conformance with the provisions herein;

19.2.1.1.1.7.The additions to and subtractions from the Contract Price and Contract Time;

19.2.1.1.1.8.A total of the retentions held;

19.2.1.1.1.9.Material invoices, evidence of equipment purchases, rentals, and other support and details of cost as the District may require from time to time;

19.2.1.1.1.10.The percentage of completion of the Contractor's Work by line item;

19.2.1.1.1.11.Schedule of Values updated from the preceding Application for Payment;

19.2.1.1.1.12.A duly completed and executed conditional waiver and release upon progress payment compliant with Civil Code section 8132 from the Contractor and each subcontractor of any tier and supplier to be paid from the current progress payment;

19.2.1.1.1.13.A duly completed and executed unconditional waiver and release upon progress payment compliant with Civil Code section 8134 from the Contractor and each subcontractor of any tier and supplier that was paid from the previous progress payment(s); and

19.2.1.1.1.14.A certification by the Contractor of the following:

The Contractor warrants title to all Work performed as of the date of this payment application has been completed in accordance with the Contract Documents for the Project. The Contractor further warrants that all amounts have been paid for work which previous Certificates for Payment were issued and payments received and all Work performed as of the date of this payment application is free and clear of liens, claims, security interests, or encumbrances in favor of the Contractor, Subcontractors, material and equipment suppliers, workers, or other persons or entities making a claim by reason of having provided labor, materials, and equipment relating to the Work, except those of which the District has been informed. Submission of sums which have no basis in fact or which Contractor knows are false are at the sole risk of Contractor and may be a violation of the False Claims Act set forth under Government Code section 12650 et seq.

19.2.1.1.1.15.The Contractor shall be subject to the False Claims Act set forth in Government Code section 12650 et seq. for information provided with any Application for Progress Payment.

19.2.1.1.1.16.All remaining certified payroll records ("CPR(s)") for each journeyman, apprentice, worker, or other employee employed by the Contractor and/or each

Subcontractor in connection with the Work for the period of the Application for Payment. As indicated herein, the District shall not make any payment to Contractor until:

19.2.1.1.1.16.1.Contractor and/or its Subcontractor(s) provide electronic CPRs directly to the DIR on no less than every 30 days while Work is being performed and within 30 days after the final day of Work performed on the Project for any journeyman, apprentice, worker or other employee was employed in connection with the Work, or within ten (10) days of any request by the District or the DIR to the requesting entity, and

19.2.1.1.1.16.2.Any delay in Contractor and/or its Subcontractor(s) providing CPRs in a timely manner may directly delay the Contractor's payment.

19.2.1.1.2.Applications received after June 20th will not be paid until the second week of July and applications received after December 12th will not be paid until the first week of January.

19.2.2. <u>Prerequisites for Progress Payments</u>

19.2.2.1.**<u>First Payment Request</u>:** The following items, if applicable, must be completed before the District will accept and/or process the Contractor's first payment request:

19.2.2.1.1.Installation of the Project sign;

19.2.2.1.2.Installation of field office;

19.2.2.1.3.Installation of temporary facilities and fencing;

19.2.2.1.4.Schedule of Values;

19.2.2.1.5.Contractor's Construction Schedule;

19.2.2.1.6.Schedule of unit prices, if applicable;

19.2.2.1.7.Submittal Schedule;

19.2.2.1.8.Receipt by Architect of all submittals due as of the date of the payment application;

19.2.2.1.9.Copies of necessary permits;

19.2.2.1.10.Copies of authorizations and licenses from governing authorities;

19.2.2.1.11.Initial progress report;

19.2.2.1.12.Surveyor qualifications;

19.2.2.1.13.Written acceptance of District's survey of rough grading, if applicable;

19.2.2.1.14.List of all Subcontractors, with names, license numbers, telephone numbers, and Scope of Work;

19.2.2.1.15.All bonds and insurance endorsements; and

19.2.2.1.16.Resumes of Contractor's project manager, and if applicable, job site secretary, record documents recorder, and job site superintendent.

19.2.2.2.**Second Payment Request:** The District will not process the second payment request until and unless all submittals and Shop Drawings have been accepted for review by the Architect.

19.2.2.3.**No Waiver of Criteria:** Any payments made to Contractor where criteria set forth herein have not been met shall not constitute a waiver of said criteria by District. Instead, such payment shall be construed as a good faith effort by District to resolve differences so Contractor may pay its Subcontractors and suppliers. Contractor agrees that failure to submit such items may constitute a breach of contract by Contractor and may subject Contractor to termination.

19.3. Progress Payments

19.3.1. District's Approval of Application for Payment

19.3.1.1.Upon receipt of an Application for Payment, The District shall act in accordance with both of the following:

19.3.1.1.1.Each Application for Payment shall be reviewed by the District as soon as practicable after receipt for the purpose of determining that the Application for Payment is a proper Application for Payment.

19.3.1.1.2.Any Application for Payment determined not to be a proper Application for Payment suitable for payment shall be returned to the Contractor as soon as practicable, but not later than seven (7) days, after receipt. An Application for Payment returned pursuant to this paragraph shall be accompanied by a document setting forth in writing the reasons why the Application for Payment is not proper. The number of days available to the District to make a payment without incurring interest pursuant to this section shall be reduced by the number of days by which the District exceeds this seven-day return requirement.

19.3.1.1.3.An Application for Payment shall be considered properly executed if funds are available for payment of the Application for Payment, and payment is not delayed due to an audit inquiry by the financial officer of the District.

19.3.1.2.The District's review of the Contractor's Application for Payment will be based on the District's and the Architect's observations at the Site and the data comprising the Application for Payment that the Work has progressed to the point indicated and that, to the best of the District's and the Architect's knowledge, information, and belief, the quality of the Work is in accordance with the Contract Documents. The foregoing representations are subject to:

19.3.1.2.1.Observation of the Work for general conformance with the Contract Documents,

19.3.1.2.2.Results of subsequent tests and inspections,

19.3.1.2.3.Minor deviations from the Contract Documents correctable prior to completion, and

19.3.1.2.4.Specific qualifications expressed by the Architect.

19.3.1.3.District's approval of the certified Application for Payment shall be based on Contractor complying with all requirements for a fully complete and valid certified Application for Payment.

19.3.2. <u>Payments to Contractor</u>

19.3.2.1.Within thirty (30) days after approval of the Application for Payment, Contractor shall be paid a sum equal to ninety-five percent (95%) of the value of the Work performed (as verified by Architect and Inspector and certified by Contractor) up to the last day of the previous month, less the aggregate of previous payments and amount to be withheld. The value of the Work completed shall be Contractor's best estimate. No inaccuracy or error in said estimate shall operate to release the Contractor, or any Surety upon any bond, from damages arising from such Work, or from the District's right to enforce each and every provision of this Contract, and the District shall have the right subsequently to correct any error made in any estimate for payment.

19.3.2.2.The Contractor shall not be entitled to have any payment requests processed or be entitled to have any payment made for Work performed, so long as any lawful or proper direction given by the District concerning the Work, or any portion thereof, remains incomplete.

19.3.2.3.If the District fails to make any progress payment within thirty (30) days after receipt of an undisputed and properly submitted Application for Payment from the Contractor, the District shall pay interest to the Contractor equivalent to the legal rate set forth in subdivision (a) of Section 685.010 of the Code of Civil Procedure.

19.3.3. <u>No Waiver</u>

No payment by District hereunder shall be interpreted so as to imply that District has inspected, approved, or accepted any part of the Work. Notwithstanding any payment, the District may enforce each and every provision of this Contract. The District may correct or require correction of any error subsequent to any payment.

19.4. <u>Decisions to Withhold Payment</u>

19.4.1. <u>Reasons to Withhold Payment</u>

The District may withhold payment in whole, or in part, to the extent reasonably necessary to protect the District if, in the District's opinion, the representations to the District required herein

cannot be made. The District may withhold payment, in whole, or in part, to such extent as may be necessary to protect the District from loss because of, but not limited to any of the following:

19.4.1.1. Defective Work not remedied within **FORTY-EIGHT (48)** hours of written notice to Contractor.

19.4.1.2. Stop Payment Notices or other liens served upon the District as a result of the Contract. Contractor agrees that the District may withhold up to 125% of the amount claimed in the Stop Payment Notice to answer the claim and to provide for the District's reasonable cost of any litigation pursuant to the stop payment notice.

19.4.1.3. Written notice to withhold payment from Contractor by payment and/or performance bond surety(ies).

19.4.1.4. Liquidated damages assessed against the Contractor.

19.4.1.5. The cost of completion of the Contract if there exists a reasonable doubt that the Work can be completed for the unpaid balance of the Contract Price or by the completion date.

19.4.1.6. Damage to the District or other contractor(s).

19.4.1.7. Unsatisfactory prosecution of the Work by the Contractor.

19.4.1.8. Failure to store and properly secure materials.

19.4.1.9. Failure of the Contractor to submit, on a timely basis, proper, sufficient, and acceptable documentation required by the Contract Documents, including, without limitation, a Construction Schedule, Schedule of Submittals, Schedule of Values, Monthly Progress Schedules, Shop Drawings, Product Data and samples, Proposed product lists, executed Change Orders, and/or verified reports.

19.4.1.10. Failure of the Contractor to maintain As-Built Drawings.

19.4.1.11. Erroneous estimates by the Contractor of the value of the Work performed, or other false statements in an Application for Payment.

19.4.1.12. Unauthorized deviations from the Contract Documents.

19.4.1.13. Failure of the Contractor to prosecute the Work in a timely manner in compliance with the Construction Schedule, established progress schedules, and/or completion dates.

19.4.1.14. Failure to provide acceptable electronic certified payroll records, as required by the Labor Code, by these Contract Documents, or by written request; for each journeyman, apprentice, worker, or other employee employed by the Contractor and/or by each Subcontractor in connection with the Work for the period of the Application for Payment or if payroll records are delinquent or inadequate.

19.4.1.15. Failure to properly pay prevailing wages as required in Labor Code section 1720 et seq., failure to comply with any other Labor Code requirements, and/or failure to comply with labor compliance monitoring and enforcement by the DIR.

19.4.1.16. Allowing an unregistered subcontractor, as described in Labor Code section 1725.5, to engage in the performance of any work under this Contract.

19.4.1.17. Failure to comply with any applicable federal statutes and regulations regarding minimum wages, withholding, payrolls and basic records, apprentice and trainee employment requirements, equal employment opportunity requirements, Copeland Act requirements, Davis-Bacon Act and related requirements, Contract Work Hours and Safety Standards Act requirements, if applicable.

19.4.1.18. Failure to properly maintain or clean up the Site.

19.4.1.19. Failure to timely indemnify, defend, or hold harmless the District.

19.4.1.20. Any payments due to the District, including but not limited to payments for failed tests, utilities changes, or permits.

19.4.1.21. Failure to pay Subcontractor(s) or supplier(s) as required by law and by the Contract Documents.

19.4.1.22. Failure to pay any royalty, license or similar fees.

19.4.1.23. Contractor is otherwise in breach, default, or in substantial violation of any provision of this Contract.

19.4.1.24. Failure to perform any implementation and/or monitoring required by any SWPPP for the Project and/or the imposition of any penalties or fines therefore whether imposed on the District or Contractor.

19.4.2. <u>Reallocation of Withheld Amounts</u>

19.4.2.1.District may, in its discretion, apply any withheld amount to pay outstanding claims or obligations as defined herein. In so doing, District shall make such payments on behalf of Contractor. If any payment is so made by District, then that amount shall be considered a payment made under Contract by District to Contractor and District shall not be liable to Contractor for any payment made in good faith. These payments may be made without prior judicial determination of claim or obligation. District will render Contractor an accounting of funds disbursed on behalf of Contractor.

19.4.2.2.If Contractor defaults or neglects to carry out the Work in accordance with the Contract Documents or fails to perform any provision thereof, District may, after **<u>FORTY-EIGHT (48)</u>** hours' written notice to the Contractor and, without prejudice to any other remedy, make good such deficiencies. The District shall adjust the total Contract Price by reducing the amount thereof by the cost of making good such deficiencies. If District deems it inexpedient to correct Work that is damaged, defective, or not done in accordance with Contract provisions, an equitable reduction in the Contract Price (of at least one hundred

fifty percent (150%) of the estimated reasonable value of the nonconforming Work) shall be made therefor.

19.4.3. Payment After Cure

When Contractor removes the grounds for declining approval, payment shall be made for amounts withheld because of them. No interest shall be paid on any retainage or amounts withheld due to the failure of the Contractor to perform in accordance with the terms and conditions of the Contract Documents.

19.5. Subcontractor Payments

19.5.1. Payments to Subcontractors

No later than seven (7) days after receipt, or pursuant to Business and Professions Code section 7108.5 and Public Contract Code section 7107, the Contractor shall pay to each Subcontractor, out of the amount paid to the Contractor on account of such Subcontractor's portion of the Work, the amount to which said Subcontractor is entitled. The Contractor shall, by appropriate agreement with each Subcontractor, require each Subcontractor to make payments to its Sub-subcontractors in a similar manner.

19.5.2. No Obligation of District for Subcontractor Payment

The District shall have no obligation to pay, or to see to the payment of, money to a Subcontractor except as may otherwise be required by law.

19.5.3. Joint Checks

District shall have the right in its sole discretion, if necessary for the protection of the District, to issue joint checks made payable to the Contractor and Subcontractors and/or material or equipment suppliers. The joint check payees shall be responsible for the allocation and disbursement of funds included as part of any such joint payment. In no event shall any joint check payment be construed to create any contract between the District and a Subcontractor of any tier, or a material or equipment supplier, any obligation from the District to such Subcontractor or a material or equipment supplier, or rights in such Subcontractor or a material or equipment supplier against the District.

20. COMPLETION OF THE WORK

20.1. Completion

20.1.1. District will accept completion of Contract and have the Notice of Completion recorded when the entire Work shall have been completed to the satisfaction of District.

20.1.2. The Work may only be accepted as complete by action of the governing board of the District.

20.1.3. District, at its sole option, may accept completion of Contract and have the Notice of Completion recorded when the entire Work shall have been completed to the satisfaction of District, except for minor corrective items, as distinguished from incomplete items. If Contractor fails to complete all minor corrective items within fifteen (15) days after the date

of the District's acceptance of completion, District shall withhold from the final payment one hundred fifty percent (150%) of an estimate of the amount sufficient to complete the corrective items, as determined by District, until the item(s) are completed.

20.1.4. At the end of the 15-day period, if there are any items remaining to be corrected, District may elect to proceed as provided herein related to adjustments to Contract Price, and/or District's right to perform the Work of the Contractor.

20.2. Close-Out/Certification Procedures

20.2.1. Punch List

The Contractor shall notify the Architect when Contractor considers the Work complete. Upon notification, Architect will prepare a list of minor items to be completed or corrected ("Punch List"). The Contractor and/or its Subcontractors shall proceed promptly to complete and correct items on the Punch List. Failure to include an item on Punch List does not alter the responsibility of the Contractor to complete all Work in accordance with the Contract Documents.

20.2.2. Close-Out/Certification Requirements

20.2.2.1.Utility Connections

Buildings shall be connected to water, gas, sewer, and electric services, complete and ready for use. Service connections shall be made and existing services reconnected.

20.2.2.2.Record Drawings and Record Specifications

20.2.2.2.1.Contractor shall provide exact Record Drawings of the Work ("As-Builts") and Record Specifications upon completion of the Project and as a condition precedent to approval of final payment.

20.2.2.2.2.Contractor shall obtain the Inspector's approval of the corrected prints and employ a competent draftsman to transfer the Record Drawings information to the most current version of AutoCAD that is, at that time, currently utilized for plan check submission by either the District, the Architect, OPSC, and/or DSA, and print a complete set of transparent sepias. When completed, Contractor shall deliver to the District corrected sepias and data storage device acceptable to District with AutoCAD file.

20.2.2.2.3.Contractor is liable and responsible for any and all inaccuracies in the Record Drawings and Record Specifications, even if inaccuracies become evident at a future date.

20.2.2.3.**Construction Storm Water Permit, if applicable**

Contractor shall submit to District all electronic or hard copy records required by the Construction Storm Water Permit, if applicable, within seven (7) days of Completion of the Project.

20.2.2.4.**Spare Parts and Maintenance Manuals:**

20.2.2.4.1.Contractor shall provide products, spare parts, maintenance, and extra materials in quantities specified in the Specifications and in Manufacturer's recommendations.

20.2.2.4.2.Contractor shall prepare all operation and maintenance manuals and date as indicated in the Specifications.

20.2.2.5.<u>Instruction of District Personnel</u>:

20.2.2.5.1.Before final inspection, at agreed upon times, Contractor shall instruct District's designated personnel in operation, adjustment, and maintenance of products, equipment, and systems.

20.2.2.5.2.For equipment requiring seasonal operation, Contractor shall perform instructions for other seasons within six months or by the change of season.

20.2.2.5.3.Contractor shall use operation and maintenance manuals as basis for instruction. Contractor shall review contents of manual with personnel in detail to explain all aspects of operation and maintenance.

20.2.2.5.4.Contractor shall prepare and insert additional data in Operation and Maintenance Manual when the need for such data becomes apparent during instruction.

20.2.2.5.5.Contractor shall review contents of manual with personnel in detail to explain all aspects of operation and maintenance.

20.2.2.6.**<u>Source Programming</u>:** Contractor shall provide all source programming for all items in the Project.

20.2.2.7.**<u>Verified Reports</u>:** Contractor shall completely and accurately fill out and file forms DSA 6-C or DSA 152 (or current form), as appropriate. Refer to section 4-336 and section 4-343 of Part 1, Title 24 of the California Code of Regulations.

20.3. <u>Final Inspection</u>

20.3.1. Contractor shall comply with Punch List procedures as provided herein and maintain the presence of a Project Superintendent and Project Manager until the Punch List is complete to ensure proper and timely completion of the Punch List. Under no circumstances shall Contractor demobilize its forces prior to completion of the Punch List without District's prior written approval. Upon receipt of Contractor's written notice that all of the Punch List items have been fully completed and the Work is ready for final inspection and District acceptance, Architect and Project Inspector will inspect the Work and shall submit to Contractor and District a final inspection report noting the Work, if any, required in order to complete in accordance with the Contract Documents. Absent unusual circumstances, this report shall consist of the Punch List items not yet satisfactorily completed.

20.3.2. Upon Contractor's completion of all items on the Punch List and any other uncompleted portions of the Work, the Contractor shall notify the District and Architect, who shall again inspect such Work. If the Architect finds the Work complete and acceptable

under the Contract Documents, the Architect will notify Contractor, who shall then jointly submit to the Architect and the District its final Application for Payment.

20.3.3. <u>Final Inspection Requirements</u>

20.3.3.1.Before calling for final inspection, Contractor shall determine that the following have been performed:

20.3.3.1.1.The Work has been completed.

20.3.3.1.2.All life safety items are completed and in working order.

20.3.3.1.3.Mechanical and electrical Work including, without limitation, security system, data, and fire alarm, are complete and tested, fixtures are in place, connected, and ready for tryout.

20.3.3.1.4.Electrical circuits scheduled in panels and disconnect switches labeled.

20.3.3.1.5.Replace filters of operating equipment.

20.3.3.1.6.Painting and special finishes complete.

20.3.3.1.7.Doors complete with hardware, cleaned of protective film, relieved of sticking or binding, and in working order.

20.3.3.1.8.Tops and bottoms of doors sealed.

20.3.3.1.9.Floors waxed and polished as specified.

20.3.3.1.10.Carpeted and soft surfaces vacuumed.

20.3.3.1.11.Broken glass replaced and interior and exterior glass and all surfaces exposed to view cleaned.

20.3.3.1.12.Equipment and fixtures cleaned to a sanitary condition.

20.3.3.1.13.Grounds cleared of Contractor's equipment, raked clean of debris, and remove waste and surplus materials, rubbish, and construction facilities from the Site and surrounding areas.

20.3.3.1.14.Site cleaned, paved areas swept, and clean landscaped surfaces raked.

20.3.3.1.15.Roofs, gutters, down spouts, and drainage systems cleaned of debris.

20.3.3.1.16.Work cleaned, free of stains, scratches, and other foreign matter, and damaged and broken material replaced.

20.3.3.1.17.Temporary labels, tape, stains, and foreign substances removed, transparent and glossy surfaces polished,

20.3.3.1.18.Finished and decorative work shall have marks, dirt, and superfluous labels removed.

20.3.3.1.19.Final cleanup, as provided herein.

20.4. Costs of Multiple Inspections

More than two (2) requests of the District to make a final inspection shall be considered an additional service of District, Architect, Construction Manager, and/or Project Inspector, and all subsequent costs will be invoiced to Contractor and if funds are available, withheld from remaining payments.

20.5. Partial Occupancy or Use Prior to Completion

20.5.1. District's Rights to Occupancy

The District may occupy or use any completed or partially completed portion of the Work at any stage, and such occupancy shall not constitute the District's Final Acceptance of any part of the Work. Neither the District's Final Acceptance, the making of Final Payment, any provision in Contract Documents, nor the use or occupancy of the Work, in whole or in part, by District shall constitute acceptance of Work not in accordance with the Contract Documents nor relieve the Contractor or the Contractor's Performance Bond Surety from liability with respect to any warranties or responsibility for faulty or defective Work or materials, equipment and workmanship incorporated therein. In the event that the District occupies or uses any completed or partially completed portion of the Work, the Contractor shall remain responsible for payments, security, maintenance, heat, utilities, damage to the Work, insurance, the period for correction of the Work, and the commencement of warranties required by the Contract Documents unless the Contractor requests in writing, and the District agrees, to otherwise divide those responsibilities. Any dispute as to responsibilities shall be resolved pursuant to the Claims Process provisions herein, with the added provision that during the dispute process, the District shall have the right to occupy or use any portion of the Work that it needs or desires to use.

20.5.2. Inspection Prior to Occupancy or Use

Immediately prior to partial occupancy or use, the District, the Contractor, and the Architect shall jointly inspect the area to be occupied or portion of the Work to be used in order to determine and record the condition of the Work.

20.5.3. No Waiver

Unless otherwise agreed upon, partial or entire occupancy or use of a portion or portions of the Work shall not constitute beneficial occupancy or District's acceptance of the Work not complying with the requirements of the Contract Documents.

21. FINAL PAYMENT AND RETENTION

21.1. Final Payment

Upon receipt and approval of a valid and final Application for Payment, the Architect will issue a final Certificate of Payment. The District shall thereupon jointly inspect the Work and either accept the

Work as complete or notify the Architect and the Contractor in writing of reasons why the Work is not complete. Upon District's acceptance of the Work of the Contractor as fully complete by the Governing Board of the District (that, absent unusual circumstances, will occur when the Punch List items have been satisfactorily completed), the District shall record a Notice of Completion with the County Recorder, and the Contractor shall, upon receipt of final payment from the District, pay the amount due Subcontractors.

21.2. <u>Prerequisites for Final Payment</u>

The following conditions must be fulfilled prior to Final Payment:

21.2.1. A full release of all Stop Payment Notices served in connection with the Work shall be submitted by Contractor.

21.2.2. A duly completed and executed conditional waiver and release upon final payment compliant with Civil Code section 8136, from the Contractor and each subcontractor of any tier and supplier to be paid from the final payment.

21.2.3. A duly completed and executed unconditional waiver and release upon progress payment compliant with Civil Code section 8134, from the Contractor and each subcontractor of any tier and supplier that was paid from the previous progress payments.

21.2.4. A duly completed and executed Document 00 65 19.26, "AGREEMENT AND RELEASE OF ANY AND ALL CLAIMS" from the Contractor.

21.2.5. The Contractor shall have made all corrections to the Work that are required to remedy any defects therein, to obtain compliance with the Contract Documents or any requirements of applicable codes and ordinances, or to fulfill any of the orders or directions of District required under the Contract Documents.

21.2.6. Each Subcontractor shall have delivered to the Contractor all written guarantees, warranties, applications, and bonds required by the Contract Documents for its portion of the Work.

21.2.7. Contractor must have completed all requirements set forth under "Close-Out/ Certification Procedures," including, without limitation, submission of an approved set of complete Record Drawings.

21.2.8. Architect shall have issued its written approval that final payment can be made.

21.2.9. The Contractor shall have delivered to the District all manuals and materials required by the Contract Documents, which must be approved by the District.

21.2.10. The Contractor shall have completed final clean-up as provided herein.

21.3. <u>Retention</u>

21.3.1. The retention, less any amounts disputed by the District or that the District has the right to withhold pursuant to provisions herein, shall be paid:

21.3.1.1.After approval by the Architect of the Application and Certificate of Payment,

21.3.1.2.After the satisfaction of the conditions set forth herein, and

21.3.1.3.After forty-five (45) days after the recording of the Notice of Completion by District.

21.3.2. No interest shall be paid on any retention, or on any amounts withheld due to a failure of the Contractor to perform, in accordance with the terms and conditions of the Contract Documents, except as provided to the contrary in any Escrow Agreement between the District and the Contractor pursuant to Public Contract Code section 22300.

21.4. Substitution of Securities

The District will permit the substitution of securities in accordance with the provisions of Public Contract Code section 22300.

22. UNCOVERING OF WORK

If a portion of the Work is covered without Inspector or Architect approval or not in compliance with the Contract Documents, it must, if required in writing by the District, the Project Inspector, or the Architect, be uncovered for the Project Inspector's or the Architect's observation and be corrected, replaced, and/or recovered at the Contractor's expense without change in the Contract Price or Contract Time.

23. NONCONFORMING WORK AND CORRECTION OF WORK

23.1. Nonconforming Work

23.1.1. Contractor shall promptly remove from Premises all Work identified by District as failing to conform to the Contract Documents whether incorporated or not. Contractor shall promptly replace and re-execute its own Work to comply with the Contract Documents without additional expense to the District and shall bear the expense of making good all work of other contractors destroyed or damaged by any removal or replacement pursuant hereto and/or any delays to the District or other Contractors caused thereby.

23.1.2. If Contractor does not remove Work that District has identified as failing to conform to the Contract Documents within a reasonable time, not to exceed **FORTY-EIGHT (48)** hours, District may remove it and may store any material at Contractor's expense. If Contractor does not pay expense(s) of that removal within ten (10) days' time thereafter, District may, upon ten (10) days' written notice, sell any material at auction or at private sale and shall deduct all costs and expenses incurred by the District and/or District may withhold those amounts from payment(s) to Contractor.

23.2. Correction of Work

23.2.1. Correction of Rejected Work

Pursuant to the notice provisions herein, the Contractor shall immediately correct the Work rejected by the District, the Architect, or the Project Inspector as failing to conform to the requirements of the Contract Documents, whether observed before or after Completion and whether or not fabricated, installed, or completed. The Contractor shall bear costs of correcting the rejected Work, including additional testing, inspections, and compensation for the Inspector's or the Architect's services and expenses made necessary thereby.

23.2.2. <u>One-Year Warranty Corrections</u>

If, within one (1) year after the date of Completion of the Work or a designated portion thereof, or after the date for commencement of warranties established hereunder, or by the terms of an applicable special warranty required by the Contract Documents, any of the Work is found to be not in accordance with the requirements of the Contract Documents, the Contractor shall correct it promptly after receipt of written notice from the District to do so. This period of one (1) year shall be extended with respect to portions of the Work first performed after Completion by the period of time between Completion and the actual performance of the Work. This obligation hereunder shall survive District's acceptance of the Work under the Contract and termination of the Contract. The District shall give such notice promptly after discovery of the condition.

23.3. <u>District's Right to Perform Work</u>

23.3.1. If the Contractor should neglect to prosecute the Work properly or fail to perform any provisions of this contract, the District, after **<u>FORTY-EIGHT (48)</u>** hours' written notice to the Contractor, may, without prejudice to any other remedy it may have, make good such deficiencies and may deduct the cost thereof from the payment then or thereafter due the Contractor.

23.3.2. If it is found at any time, before or after completion of the Work, that Contractor has varied from the Drawings and/or Specifications, including, but not limited to, variation in material, quality, form, or finish, or in the amount or value of the materials and labor used, District may require at its option:

23.3.2.1.That all such improper Work be removed, remade or replaced, and all work disturbed by these changes be made good by Contractor at no additional cost to the District;

23.3.2.2.That the District deduct from any amount due Contractor the sum of money equivalent to the difference in value between the work performed and that called for by the Drawings and Specifications; or

23.3.2.3.That the District exercise any other remedy it may have at law or under the Contract Documents, including but not limited to the District hiring its own forces or another contractor to replace the Contractor's nonconforming Work, in which case the District shall either issue a deductive Change Order, a Construction Change Directive, or invoice the Contractor for the cost of that work. Contractor shall pay any invoices within thirty (30) days of receipt of same or District may withhold those amounts from payment(s) to Contractor.

24. <u>TERMINATION AND SUSPENSION</u>

24.1. <u>District's Request for Assurances</u>

If District at any time reasonably believes Contractor is or may be in default under this Contract, District may in its sole discretion notify Contractor of this fact and request written assurances from Contractor of performance of Work and a written plan from Contractor to remedy any potential default under the terms this Contract that the District may advise Contractor of in writing. Contractor shall, within ten (10) calendar days of District's request, deliver a written cure plan that meets the District's requirements in its request for assurances. Contractor's failure to provide such

written assurances of performance and the required written plan, within ten (10) calendar days of request, will constitute a material breach of this Contract sufficient to justify termination for cause.

24.2. District's Right to Terminate Contractor for Cause

24.2.1. **Grounds for Termination:** The District, in its sole discretion, may terminate the Contract and/or terminate the Contractor's right to perform the work of the Contract based upon any of the following:

24.2.1.1. Contractor refuses or fails to execute the Work or any separable part thereof with sufficient diligence as will ensure its completion within the time specified or any extension thereof, or

24.2.1.2. Contractor fails to complete said Work within the time specified or any extension thereof, or

24.2.1.3. Contractor persistently fails or refuses to perform Work or provide material of sufficient quality as to be in compliance with Contract Documents; or

24.2.1.4. Contractor persistently refuses, or repeatedly fails, except in cases for which extension of time is provided, to supply enough properly skilled workers or proper materials to complete the Work in the time specified; or

24.2.1.5. Contractor fails to make prompt payment to Subcontractors, or for material, or for labor; or

24.2.1.6. Contractor persistently disregards laws, or ordinances, or instructions of District; or

24.2.1.7. Contractor fails to supply labor, including that of Subcontractors, that is sufficient to prosecute the Work or that can work in harmony with all other elements of labor employed or to be employed on the Work; or

24.2.1.8.Contractor or its Subcontractor(s) is/are otherwise in breach, default, or in substantial violation of any provision of this Contract, including but not limited to a lapse in licensing or registration.

24.2.2. Notification of Termination

24.2.2.1.Upon the occurrence at District's sole determination of any of the above conditions, District may, without prejudice to any other right or remedy, serve written notice upon Contractor and its Surety of District's termination of this Contract and/or the Contractor's right to perform the work of the Contract. This notice will contain the reasons for termination. Unless, within three (3) days after the service of the notice, any and all condition(s) shall cease, and any and all violation(s) shall cease, or arrangement satisfactory to District for the correction of the condition(s) and/or violation(s) be made, this Contract and/or the Contractor's right to perform the Work of the Contract shall cease and terminate. Upon termination, Contractor shall not be entitled to receive any further payment until the entire Work is finished.

24.2.2.2.Upon termination, District may immediately serve written notice of tender upon Surety whereby Surety shall have the right to take over and perform this Contract only if Surety:

24.2.2.2.1.Within three (3) days after service upon it of the notice of tender, gives District written notice of Surety's intention to take over and perform this Contract; and

24.2.2.2.2.Commences performance of this Contract within three (3) days from date of serving of its notice to District.

24.2.2.3.Surety shall not utilize Contractor in completing the Project if the District notifies Surety of the District's objection to Contractor's further participation in the completion of the Project. Surety expressly agrees that any contractor which Surety proposes to fulfill Surety's obligations is subject to District's approval. District's approval shall not be unreasonably withheld, conditioned or delayed.

24.2.2.4.If Surety fails to notify District or begin performance as indicated herein, District may take over the Work and execute the Work to completion by any method it may deem advisable at the expense of Contractor and/or its Surety. Contractor and/or its Surety shall be liable to District for any excess cost or other damages the District incurs thereby. Time is of the essence in this Contract. If the District takes over the Work as herein provided, District may, without liability for so doing, take possession of and utilize in completing the Work such materials, appliances, plan, and other property belonging to Contractor as may be on the Site of the Work, in bonded storage, or previously paid for.

24.2.2.5.In the alternative, the District shall have the right (but shall have no obligation) to assume and/or assign to a general contractor or construction manager or other third party who is qualified and has sufficient resources to complete the Work, the rights of the Contractor under its subcontracts with any or all Subcontractors. In the event of an assumption or assignment by the District, no Subcontractor shall have any claim against the District or third party for Work performed by Subcontractor or other matters arising prior to termination of the Contract and/or the Contractor's right to perform the work of the Contract. The District or any third party, as the case may be, shall be liable only for obligations to the Subcontractor arising after assumption or assignment. Should the District so elect, the Contractor shall execute and deliver all documents and take all steps, including the legal assignment of its contractual rights, as the District may require, for the purpose of fully vesting in the District the rights and benefits of its Subcontractor under Subcontracts or

other obligations or commitments. All payments due the Contractor hereunder shall be subject to a right of offset by the District for expenses and damages suffered by the District as a result of any default, acts, or omissions of the Contractor. Contractor must include this assignment provision in all of its contracts with its Subcontractors.

24.2.3. In the event of a termination for cause, if the expense to the District to finish the Work exceeds the unpaid Contract Price, Contractor and Surety shall pay difference to District within twenty-one (21) days of District's request.

24.2.4. In the event a termination for cause is later determined to have been made wrongfully or without cause, then the termination shall be treated as a termination for convenience, effective as of the same date as the purported termination for cause, and the Contractor shall have no greater rights than it would have had following a termination for convenience. Any Contractor claim arising out of a termination for cause shall be made in accord with Article 12 herein. No other loss, cost, damage, expense or liability may be claimed, requested or recovered by the Contractor.

24.3. <u>Termination of Contractor for Convenience</u>

24.3.1. District in its sole discretion may terminate the Contract in whole or in part upon three (3) days' written notice to the Contractor.

24.3.2. Upon notice, Contractor shall:

24.3.2.1.Cease operations as directed by the District in the notice;

24.3.2.2.Take necessary actions for the protection and preservation of the Work as soon as possible; and

24.3.2.3.Terminate all existing subcontracts and purchase orders and enter into no further subcontracts and purchase orders.

24.3.3. Within 30 days of the notice, Contractor submit to the District a payment application for the actual cost for labor, materials, and services performed, including all Contractor's and Subcontractor(s)' mobilization and/or demobilization costs, that is unpaid. Contractor shall have no claims against the District except for the actual cost for labor, materials, and services performed that adequately documented through timesheets, invoices, receipts, or otherwise. District shall pay all undisputed invoice(s) for work performed until the notice of termination.

24.3.4. If Contractor objects to the termination for convenience, including disagreement on the actual cost due Contractor, the District retains the right to all the options available to the District under a termination for cause.

24.4. <u>Effect of Termination</u>

24.4.1. Contractor shall, only if ordered to do so by the District, immediately remove from the Site all or any materials and personal property belonging to Contractor that have not been incorporated in the construction of the Work, or which are not in place in the Work. The District retains the right, but not the obligation, to keep and use any materials and

personal property belonging to Contractor that have not been incorporated in the construction of the Work, or which are not in place in the Work. The Contractor and its Surety shall be liable upon the Performance Bond for all damages caused to the District by reason of the Contractor's failure to complete the Contract.

24.4.2. In the event that the District shall perform any portion of, or the whole of the Work, pursuant to the provisions of the General Conditions, the District shall not be liable nor account to the Contractor in any way for the time within which, or the manner in which, the Work is performed by the District or for any changes the District may make in the Work or for the money expended by the District in satisfying claims and/or suits and/or other obligations in connection with the Work.

24.4.3. In the event that the Contract is terminated for any reason, no allowances or compensation will be granted for the loss of any anticipated profit by the Contractor or any impact or impairment of Contractor's bonding capacity.

24.4.4. The foregoing provisions are in addition to and not in limitation of any other rights or remedies available to District.

24.5. <u>Emergency Termination of Public Contracts Act of 1949</u>

24.5.1. This Contract is subject to termination as provided by sections 4410 and 4411 of the Government Code of the State of California, being a portion of the Emergency Termination of Public Contracts Act of 1949.

24.5.1.1.Section 4410 of the Government Code states:

In the event a national emergency occurs, and public work, being performed by contract, is stopped, directly or indirectly, because of the freezing or diversion of materials, equipment or labor, as the result of an order or a proclamation of the President of the United States, or of an order of any federal authority, and the circumstances or conditions are such that it is impracticable within a reasonable time to proceed with a substantial portion of the work, then the public agency and the contractor may, by written agreement, terminate said contract.

24.5.1.2.Section 4411 of the Government Code states:

Such an agreement shall include the terms and conditions of the termination of the contract and provision for the payment of compensation or money, if any, which either party shall pay to the other or any other person, under the facts and circumstances in the case.

24.5.2. Compensation to the Contractor shall be determined at the sole discretion of District on the basis of the reasonable value of the Work done, including preparatory work. As an exception to the foregoing and at the District's discretion, in the case of any fully completed separate item or portion of the Work for which there is a separate previously submitted unit price or item on the accepted schedule of values, that price shall control. The District, at its sole discretion, may adopt the Contract Price as the reasonable value of the work done or any portion thereof.

24.6. Suspension of Work

24.6.1. District in its sole discretion may suspend, delay or interrupt the Work in whole or in part for such period of time as the District may determine upon three (3) days written notice to the Contractor.

24.6.1.1.An adjustment may be made for changes in the cost of performance of the Work caused by any such suspension, delay or interruption. No adjustment shall be made to the extent:

24.6.1.1.1.That performance is, was or would have been so suspended, delayed or interrupted by another cause for which Contractor is responsible; or

24.6.1.1.2.That an equitable adjustment is made or denied under another provision of the Contract; or

24.6.1.1.3.That the suspension of Work was the direct or indirect result of Contractor's failure to perform any of its obligations hereunder.

24.6.1.2.Any adjustments in cost of performance may have a fixed or percentage fee as provided in the section on Format for Proposed Change Order herein. This amount shall be full compensation for all Contractor's and its Subcontractor(s)' changes in the cost of performance of the Contract caused by any such suspension, delay or interruption.

25. CLAIMS PROCESS

25.1. Obligation to File Claims for Disputes

25.1.1. Should Contractor otherwise seek extra time or compensation for any reason whatsoever, then Contractor shall first follow procedures set forth in the Contract Documents including, without limitation, Articles 15, 16 and 17, all of which are conditions precedent to submitting a Claim pursuant to Article 25. A Notice of Delay or Proposed Change Order are less formal procedures that proceed the formal claim and do not constitute a Claim. A Claim also does not include correspondence, RFIs, vouchers, invoices, progress payment applications, or other routine or authorized form of requests for progress payments in compliance with the Contract. If a dispute remains, then Contractor shall give written notice to District that expressly invokes this Article 25 within the time limits set forth herein.

25.1.2. Contractor's sole and exclusive remedy for a Dispute is to file a written claim setting forth Contractor's position as required herein within the time limits set forth herein.

25.2. Duty to Perform during Claim Process

Contractor and its subcontractors shall continue to perform its Work under the Contract including the disputed work and shall not cause a delay of the Work during any dispute, claim, negotiation, mediation, or arbitration proceeding, except by written agreement by the District.

25.3. Definition of Claim

25.3.1. Pursuant to Public Contract Code section 9204, the term "Claim" means a separate demand by the Contractor sent by registered mail or certified mail with return receipt requested, for one or more of the following:

25.3.1.1.A time extension, including without limitation, for relief of damages or penalties for delay assessed by the District under the Contract;

25.3.1.2.Payment by the District of money or damages arising from work done by, or on behalf of, the Contractor pursuant to the Contract and payment of which is not otherwise expressly provided for or to which Contractor is not otherwise entitled to; or

25.3.1.3.An amount of payment disputed by the District.

25.4. Claims Presentation

25.4.1. Form and Contents of Claim

25.4.1.1.If Contractor intends to submit a Claim for an increase in the Contract Price and/or Contract Time for any reason including, without limitation, the acts of District or its agents, Contractor shall, within thirty (30) days after the event giving rise to the Claim, give notice of the Claim ("Notice of Potential Claim") in writing specifically identifying Contractor is invoking this Article 25 Claims Presentation. The Notice of Potential Claim shall provide Contractor's preliminary request for an adjustment to the Contract Price and/or Contract Time, with a description of the grounds therefore.

25.4.1.2.Within thirty (30) days after serving the written Notice of Potential Claim, Contractor shall provide a Claim including an itemized statement of the details and amounts of its Claim for any increase in the Contract Price of Contract Time as provided below, including a Time Impact Analysis and any and all other documentation substantiating Contractor's claimed damages:

25.4.1.2.1.The issues, events, conditions, circumstances and/or causes giving rise to the dispute, and shall show, in detail, the cause and effect of same;

25.4.1.2.2.Citation to provisions in the Contract Documents, statute sections, and/or case law entitling Contractor to an increase in the Contract Price or Contract Time;

25.4.1.2.3.The pertinent dates and/or durations and actual and/or anticipated effects on the Contract Price, Contract Schedule milestones and/or Contract Time adjustments;

25.4.1.2.4.The Time Impact Analysis of all time delays that shows actual time impact on the critical path; and

25.4.1.2.5.The line-item costs for labor, material, and/or equipment, if applicable, for all cost impacts priced like a change order according to Article 17 and must be updated monthly as to cost and entitlement if a continuing claim.

25.4.1.3.The Claim shall include the following certification by the Contractor:

25.4.1.3.1.The undersigned Contractor certifies under penalty of perjury that the attached dispute is made in good faith; that the supporting data is accurate and complete to the best of my knowledge and belief; that the amount requested accurately reflects the adjustment for which Contractor believes the District is liable; and that I am duly authorized to certify the dispute on behalf of the Contractor.

25.4.1.3.2.Furthermore, Contractor understands that the value of the attached dispute expressly includes any and all of the Contractor's costs and expenses, direct and indirect, resulting from the Work performed on the Project, additional time required on the Project and/or resulting from delay to the Project including, without limitation, cumulative impacts. Contractor may not separately recover for overhead or other indirect costs. Any costs, expenses, damages, or time extensions not included are deemed waived.

25.4.2. Contractor shall bear all costs incurred in the preparation and submission of a Claim.

25.4.3. Failure to timely submit a Claim and the requisite supporting documentation shall constitute a waiver of Contractor's claim(s) against the District and Contractor's Claim(s) for compensation or an extension of time shall be deemed waived, released, and discharged as to any entitlement for adjustment to Contract Price and/or Contract Time.

25.5. <u>Claim Resolution pursuant to Public Contract Code section 9204</u>

Contractor may request to waive the claims procedure under Public Contract Code section 9204 and proceed directly to the commencement of a civil action or binding arbitration. If Contractor chooses to proceed, Contractor shall comply with the following steps:

25.5.1. STEP 1:

25.5.1.1.Upon receipt of a Claim by registered or certified mail, return receipt requested, including the documents necessary to substantiate it, the District shall conduct a reasonable review of the Claim and, within a period not to exceed forty-five (45) days, shall provide the Contractor a written statement identifying what portion of the Claim is disputed and what portion is undisputed. Upon receipt of a Claim, the District and Contractor may, by mutual agreement, extend the time period to provide a written statement. If the District needs approval from its governing body to provide the Contractor a written statement identifying the disputed portion and the undisputed portion of the Claim, and the governing body does not meet within the forty-five (45) days or within the mutually agreed to extension of time following receipt of Claim sent by registered mail or certified mail, return receipt requested, the District shall have up to three (3) days following the next duly publicly noticed meeting of the governing body after the 45-day period, or extension, expires to provide Contractor a written statement identifying the disputed portion and the undisputed portion.

25.5.1.1.1.Any payment due on an undisputed portion of the Claim shall be processed and made within sixty (60) days after the District issues its written statement. Amounts not paid in a timely manner as required by this section shall bear interest at seven percent (7%) per annum.

25.5.1.2.Upon receipt of a Claim, the parties may mutually agree to waive, in writing, mediation and proceed directly to the commencement of a civil action or binding

arbitration, as applicable. In this instance, District and Contractor must comply with the sections below regarding Public Contract Code section 20104, et seq. and Government Code Claim Act Claims.

25.5.1.3.If the District fails to issue a written statement, or to otherwise meet the time requirements of this section, this shall result in the Claim being deemed rejected in its entirety. A Claim that is denied by reason of the District's failure to have responded to a Claim, or its failure to otherwise meet the time requirements of this section, shall not constitute an adverse finding with regard to the merits of the Claim or the responsibility or qualifications of Contractor.

25.5.2. STEP 2:

25.5.2.1.If Contractor disputes the District's written response, or if the District fails to respond to a Claim within the time prescribed, Contractor may demand in writing an informal conference to meet and confer for settlement of the issues in dispute. Upon receipt of a demand in writing sent by registered mail or certified mail, return receipt requested, the District shall schedule a meet and confer conference within thirty (30) days for settlement of the dispute. Within ten (10) business days following the conclusion of the meet and confer conference, if the Claim or any portion of the Claim remains in dispute, the District shall provide the Contractor a written statement identifying the portion of the Claim that remains in dispute and the portion that is undisputed.

25.5.2.1.1.1.Any payment due on an undisputed portion of the Claim shall be processed and made within sixty (60) days after the District issues its written statement. Amounts not paid in a timely manner as required by this section shall bear interest at seven percent (7%) per annum.

25.5.3. STEP 3:

25.5.3.1.Any disputed portion of the Claim, as identified by Contractor in writing, shall be submitted to nonbinding mediation, with the District and Contractor sharing the associated costs equally. The District and Contractor shall mutually agree to a mediator within ten (10) business days after the disputed portion of the Claim has been identified in writing. If the parties cannot agree upon a mediator, each party shall select a mediator and those mediators shall select a qualified neutral third party to mediate with regard to the disputed portion of the Claim. Each party shall bear the fees and costs charged by its respective mediator in connection with the selection of the neutral mediator. If mediation is unsuccessful, the parts of the Claim remaining in dispute shall be subject to applicable procedures outside this section.

25.5.3.1.1.For purposes of this section, mediation includes any nonbinding process, including, but not limited to, neutral evaluation or a dispute review board, in which an independent third party or board assists the parties in dispute resolution through negotiation or by issuance of an evaluation. Any mediation utilized shall conform to the timeframes in this section.

25.5.3.2.Unless otherwise agreed to by the District and Contractor in writing, the mediation conducted pursuant to this section shall excuse any further obligation under Public Contract Code section 20104.4 to mediate after litigation has been commenced.

25.5.4. STEP 4:

25.5.4.1.If mediation under this section does not resolve the parties' dispute, the District may, but does not require arbitration of disputes under private arbitration or the Public Works Contract Arbitration Program.

25.6. <u>Subcontractor Pass-Through Claims</u>

25.6.1. If a subcontractor or a lower tier subcontractor lacks legal standing to assert a claim against a District because privity of contract does not exist, the contractor may present to the District a Claim on behalf of a subcontractor or lower tier subcontractor. A subcontractor may request in writing, either on his or her own behalf or on behalf of a lower tier subcontractor, that Contractor present a Claim for work which was performed by the subcontractor or by a lower tier subcontractor on behalf of the subcontractor. The subcontractor requesting that the Claim be presented to the District shall furnish reasonable documentation to support the Claim.

25.6.2. Within forty-five (45) days of receipt of this written request from a subcontractor, Contractor shall notify the subcontractor in writing as to whether the Contractor presented the Claim to the District and, if Contractor did not present the Claim, provide the subcontractor with a statement of the reasons for not having done so.

25.6.3. The Contractor shall bind all its Subcontractors to the provisions of this section and will hold the District harmless against Claims by Subcontractors.

25.7. <u>Government Code Claim Act Claim</u>

25.7.1. If a claim, or any portion thereof, remains in dispute upon satisfaction of all applicable Claim Resolution requirements the Contractor shall comply with all claims presentation requirements as provided in Chapter 1 (commencing with section 900) and Chapter 2 (commencing with section 910) of Part 3 of Division 3.6 of Title 1 of Government Code as a condition precedent to the Contractor's right to bring a civil action against the District.

25.7.2. Contractor shall bear all costs incurred in the preparation, submission and administration of a Claim. Any claims presented in accordance with the Government Code must affirmatively indicate Contractor's prior compliance with the claims procedure herein of the claims asserted.

25.7.3. For purposes of those provisions, the running of the time within which a claim pursuant to Public Contract Code section 20104.2 only must be presented to the District shall be tolled from the time the claimant submits his or her written claim until the time that claim is denied as a result of the meet and confer process, including any period of time utilized by the meet and confer process.

25.8. <u>Claim Resolution pursuant to Public Contract Code section 20104 et seq.</u>

25.8.1. In the event of a disagreement between the parties as to performance of the Work, the interpretation of this Contract, or payment or nonpayment for Work performed or not performed, the parties shall attempt to resolve all claims of three hundred seventy-five

thousand dollars ($375,000) or less which arise between Contractor and District by those procedures set forth in Public Contract Code section 20104, et seq., to the extent applicable.

25.8.1.1.Contractor shall file with the District any written Claim, including the documents necessary to substantiate it, upon the application for final payment.

25.8.1.2.For claims of less than fifty thousand dollars ($50,000), the District shall respond in writing within forty-five (45) days of receipt of the Claim or may request in writing within thirty (30) days of receipt of the Claim any additional documentation supporting the Claim or relating to defenses or claims the District may have against the Contractor.

25.8.1.2.1.If additional information is required, it shall be requested and provided by mutual agreement of the parties.

25.8.1.2.2.District's written response to the documented Claim shall be submitted to the Contractor within fifteen (15) days after receipt of the further documentation or within a period of time no greater than that taken by the Contractor to produce the additional information, whichever is greater.

25.8.1.3.For claims of over fifty thousand dollars ($50,000) and less than or equal to three hundred seventy-five thousand dollars ($375,000), the District shall respond in writing to all written Claims within sixty (60) days of receipt of the claim, or may request, in writing, within thirty (30) days of receipt of the Claim any additional documentation supporting the Claim or relating to defenses or claims the District may have against the Contractor.

25.8.1.3.1.If additional information is required, it shall be requested and provided upon mutual agreement of the District and the Contractor.

25.8.1.3.2.The District's written response to the Claim, as further documented, shall be submitted to the Contractor within thirty (30) days after receipt of the further documentation, or within a period of time no greater than that taken by the Contractor to produce the additional information or requested documentation, whichever is greater.

25.8.1.4.If Contractor disputes the District’s written response, or the District fails to respond within the time prescribed, Contractor may so notify the District, in writing, either within fifteen (15) days of receipt of the District's response or within fifteen (15) days of the District's failure to respond within the time prescribed, respectively, and demand an informal conference to meet and confer for settlement of the issues in dispute. Upon a demand, the District shall schedule a meet and confer conference within thirty (30) days for settlement of the dispute.

25.8.1.5.Following the meet and confer conference, if the Claim or any portion of it remains in dispute, the Contractor may file a claim as provided in Chapter 1 (commencing with Section 900) and Chapter 2 (commencing with Section 910) of Part 3 of Division 3.6 of Title 1 of the Government Code. For purposes of those provisions the running of the time within which a claim must be filed shall be tolled from the time the Contractor submits its written Claim until the time the Claim is denied, including any period of time utilized by the meet and confer process.

25.8.1.6.For any civil action filed to resolve claims filed pursuant to this section, within sixty (60) days, but no earlier than thirty (30) days, following the filing of responsive pleadings, the court shall submit the matter to nonbinding mediation unless waived by mutual stipulation of both parties. The mediation process shall provide for the selection within fifteen (15) days by both parties of a disinterested third person as mediator, shall be commenced within thirty (30) days of the submittal, and shall be concluded within fifteen (15) days from the commencement of the mediation unless a time requirement is extended upon a good cause showing to the court or by stipulation of both parties. If the parties fail to select a mediator within the 15-day period, any party may petition the court to appoint the mediator.

25.8.1.7.If the matter remains in dispute, the case shall be submitted to judicial arbitration pursuant to Chapter 2.5 (commencing with Section 1141.10) of the Title 3 of Part 3 of the Code of Civil Procedure, notwithstanding Section 1141.11 of that code. The Civil Discovery Act of 1986, (Article 3 (commencing with Section 2016) of Chapter 3 of Title 3 of part 4 of the Code of Civil Procedure) shall apply to any proceeding brought under this subdivision consistent with the rules pertaining to judicial arbitration.

25.8.1.8.The District shall not fail to pay money as to any portion of a Claim which is undisputed except as otherwise provided in the Contract Documents. In any suit filed pursuant to this section, the District shall pay interest due at the legal rate on any arbitration award or judgment. Interest shall begin to accrue on the date the suit is filed in a court of law.

25.8.2. Contractor shall bind its Subcontractors to the provisions of this Article and will hold the District harmless against disputes by Subcontractors.

25.9. <u>Claim Procedure Compliance</u>

25.9.1. Failure to submit and administer claims as required in Article 25 shall waive Contractor's right to claim on any specific issues not included in a timely submitted claim. Claim(s) not raised in a timely protest and timely claim submitted under this Article 25 may not be asserted in any subsequent litigation, Government Code Claim, or legal action.

25.9.2. District shall not be deemed to waive any provision under this Article 25, if at District's sole discretion, a claim is administered in a manner not in accord with this Article 25. Waivers or modifications of this Article 25 may only be made by a signed change order approved as to form by legal counsel for both District and Contractor; oral or implied modifications shall be ineffective.

25.10. <u>Claim Resolution Non-Applicability</u>

25.10.1. The procedures for dispute and claim resolutions set forth in this Article shall not apply to the following:

25.10.1.1.Personal injury, wrongful death or property damage claims;

25.10.1.2.Latent defect or breach of warranty or guarantee to repair;

25.10.1.3.Stop payment notices;

25.10.1.4.District's rights set forth in the Article on Suspension and Termination;

25.10.1.5.Disputes arising out of labor compliance enforcement by the Department of Industrial Relations; or

25.10.1.6.District rights and obligations as a public entity set forth in applicable statutes; provided, however, that penalties imposed against a public entity by statutes, including, but not limited to, Public Contract Code sections 20104.50 and 7107, shall be subject to the Claim Resolution requirements provided in this Article.

25.11. Attorney's Fees

25.11.1. Should litigation be necessary to enforce any terms or provisions of this Agreement, then each party shall bear its own litigation and collection expenses, witness fees, court costs, and attorney's fees.

26. STATE LABOR, WAGE & HOUR, APPRENTICE, AND RELATED PROVISIONS

26.1. Labor Compliance and Enforcement

Since this Project is subject to labor compliance and enforcement by the Department of Industrial Relations ("DIR"), Contractor specifically acknowledges and understands that it shall perform the Work of this Agreement while complying with all the applicable provisions of Division 2, Part 7, Chapter 1, of the Labor Code and Title 8 of the California Code of Regulations, including, without limitation, the requirement that the Contractor and all Subcontractors shall timely furnish complete and accurate electronic certified payroll records directly to the DIR. The District may not issue payment if this requirement is not met.

26.2. Wage Rates, Travel, and Subsistence

26.2.1. Pursuant to the provisions of Article 2 (commencing at section 1770), Chapter 1, Part 7, Division 2, of the Labor Code, the general prevailing rate of per diem wages and the general prevailing rate for holiday and overtime work in the locality in which this public work is to be performed for each craft, classification, or type of worker needed to execute this Contract are on file at the District's principal office and copies will be made available to any interested party on request or available online at http://www.dir.ca.gov/. Contractor shall obtain and post a copy of these wage rates at the job site.

26.2.2. Holiday and overtime work, when permitted by law, shall be paid for at the general prevailing rate of per diem wages for holiday and overtime work on file with the Director of the Department of Industrial Relations, unless otherwise specified. The holidays upon which those rates shall be paid need not be specified by the District but shall be all holidays recognized in the applicable collective bargaining agreement. If the prevailing rate is not based on a collectively bargained rate, the holidays upon which the prevailing rate shall be paid shall be as provided in Section 6700 of the Government Code.

26.2.3. Contractor shall pay and shall cause to be paid each worker engaged in Work on the Project the general prevailing rate of per diem wages determined by the Director of the Department of Industrial Relations, regardless of any contractual relationship which may be alleged to exist between Contractor or any Subcontractor and such workers.

26.2.4. If during the period this bid is required to remain open, the Director of the Department of Industrial Relations determines that there has been a change in any prevailing rate of per diem wages in the locality in which the Work under the Contract is to be performed, such change shall not alter the wage rates in the Notice to Bidders or the Contract subsequently awarded.

26.2.5. Pursuant to Labor Code section 1775, Contractor shall, as a penalty to District, forfeit the statutory amount up to two hundred dollars ($200) for each calendar day, or portion thereof, for each worker paid less than the prevailing rates, determined by the District and/ or the Director, for the work or craft in which that worker is employed for any public work done under Contract by Contractor or by any Subcontractor under it. The difference between such prevailing wage rates and the amount paid to each worker for each calendar day or portion thereof for which each worker was paid less than the prevailing wage rate shall be paid to each worker by Contractor.

26.2.6. Any worker employed to perform Work on the Project, which Work is not covered by any classification listed in the general prevailing wage rate of per diem wages determined by the Director, shall be paid not less than the minimum rate of wages specified therein for the classification which most nearly corresponds to Work to be performed by him, and such minimum wage rate shall be retroactive to time of initial employment of such person in such classification.

26.2.7. Pursuant to Labor Code section 1773.1, per diem wages are deemed to include employer payments for health and welfare, pension, vacation, travel time, subsistence pay, and apprenticeship or other training programs authorized by Labor Code section 3093, and similar purposes.

26.2.8. Contractor shall post at appropriate conspicuous points on the Site of Project, a schedule showing all determined minimum wage rates and all authorized deductions, if any, from unpaid wages actually earned. In addition, Contractor shall post a sign-in log for all workers and visitors to the Site, a list of all subcontractors of any tier on the Site, and the required Equal Employment Opportunity poster(s).

26.3. <u>Hours of Work</u>

26.3.1. As provided in article 3 (commencing at section 1810), chapter 1, part 7, division 2, of the Labor Code, eight (8) hours of labor shall constitute a legal day's work. The time of service of any worker employed at any time by Contractor or by any Subcontractor on any subcontract under this Contract upon the Work or upon any part of the Work contemplated by this Contract shall be limited and restricted by Contractor to eight (8) hours per day, and forty (40) hours during any one week, except as hereinafter provided. Notwithstanding the provisions hereinabove set forth, Work performed by employees of Contractor in excess of eight (8) hours per day and forty (40) hours during any one week, shall be permitted upon this public work upon compensation for all hours worked in excess of eight (8) hours per day at not less than one and one-half times the basic rate of pay.

26.3.2. Contractor shall keep and shall cause each Subcontractor to keep an accurate record showing the name of and actual hours worked each calendar day and each calendar week by each worker employed by Contractor in connection with the Work or any part of the Work

contemplated by this Contract. The record shall be kept open at all reasonable hours to the inspection of District and to the Division of Labor Standards Enforcement of the DIR.

26.3.3. Pursuant to Labor Code section 1813, Contractor shall as a penalty to the District forfeit the statutory amount (believed by the District to be currently twenty-five dollars ($25)) for each worker employed in the execution of this Contract by Contractor or by any Subcontractor for each calendar day during which such worker is required or permitted to work more than eight (8) hours in any one calendar day and forty (40) hours in any one calendar week in violation of the provisions of article 3 (commencing at section 1810), chapter 1, part 7, division 2, of the Labor Code.

26.3.4. Any Work necessary to be performed after regular working hours, or on Sundays or other holidays shall be performed without additional expense to the District.

26.4. <u>Payroll Records</u>

26.4.1. Contractor shall upload, and shall cause each Subcontractor performing any portion of the Work under this Contract to upload, an accurate and complete certified payroll record ("CPR") electronically using DIR's eCPR System by uploading the CPRs by electronic XML file or entering each record manually using the DIR's iform (or current form) online on no less than every thirty (30) days while Work is being performed and within thirty (30) days after the final day of Work performed on the Project and within ten (10) days of any request by the District or Labor Commissioner at http://www.dir.ca.gov/Public-Works/Certified-Payroll-Reporting.html or current application and URL, showing the name, address, social security number, work classification, straight-time, and overtime hours worked each day and week, and the actual per diem wages paid to each journeyman, apprentice, worker, or other employee employed by the Contractor and/or each Subcontractor in connection with the Work.

26.4.1.1.The CPRs enumerated hereunder shall be filed directly with the DIR on a weekly basis or to the requesting party, whether the District or DIR, within ten (10) days after receipt of each written request. The CPRs from the Contractor and each Subcontractor for each week shall be provided on or before Wednesday of the week following the week covered by the CPRs. District may not make any payment to Contractor until:

26.4.1.1.1.Contractor and/or its Subcontractor(s) provide CPRs acceptable to the DIR; and

26.4.1.1.2.Any delay in Contractor and/or its Subcontractor(s) providing CPRs to the DIR in a timely manner may directly delay Contractor's payment.

26.4.2. All CPRs shall be available for inspection at all reasonable hours at the principal office of Contractor on the following basis:

26.4.2.1.A certified copy of an employee's CPR shall be made available for inspection or furnished to the employee or his/her authorized representative on request.

26.4.2.2.CPRs shall be made available for inspection or furnished upon request to a representative of District, Division of Labor Standards Enforcement, Division of Apprenticeship Standards, and/or the DIR.

26.4.2.3.CPRs shall be made available upon request by the public for inspection or copies thereof made; provided, however, that a request by the public shall be made through the District, Division of Apprenticeship Standards, or the Division of Labor Standards Enforcement. If the requested CPRs have not been provided pursuant to the provisions herein, the requesting party shall, prior to being provided the records, reimburse the costs of preparation by Contractor, Subcontractors, and the entity through which the request was made. The public shall not be given access to the records at the principal office of Contractor.

26.4.3. Any copy of records made available for inspection as copies and furnished upon request to the public or any public agency by District, Division of Apprenticeship Standards, or Division of Labor Standards Enforcement shall be marked or obliterated in such a manner as to prevent disclosure of an individual's name, address, and social security number. The name and address of Contractor awarded Contract or performing Contract shall not be marked or obliterated.

26.4.4. Contractor shall inform District of the location of the records enumerated hereunder, including the street address, city, and county, and shall, within five (5) working days, provide a notice of change of location and address.

26.4.5. In the event of noncompliance with the requirements of this section, Contractor shall have ten (10) days in which to comply subsequent to receipt of written notice specifying in what respects Contractor must comply with this section. Should noncompliance still be evident after the ten (10) day period, Contractor shall, as a penalty to District, forfeit up to one hundred dollars ($100) for each calendar day, or portion thereof, for each worker, until strict compliance is effectuated. Upon the request of the Labor Commissioner, these penalties shall be withheld from progress payments then due.

26.4.6. **[RESERVED]**

26.5. [RESERVED]

26.6. Apprentices

26.6.1. Contractor acknowledges and agrees that, if this Contract involves a dollar amount greater than, or a number of working days greater than that specified in Labor Code section 1777.5, then this Contract is governed by the provisions of Labor Code Section 1777.5. It shall be the responsibility of Contractor to ensure compliance with this Article and with Labor Code section 1777.5 for all apprenticeship occupations.

26.6.2. Apprentices of any crafts or trades may be employed and, when required by Labor Code section 1777.5, shall be employed provided they are properly registered in full compliance with the provisions of the Labor Code.

26.6.3. Every such apprentice shall be paid the standard wage paid to apprentices under the regulations of the craft or trade at which he/she/they is employed, and shall be employed only at the work of the craft or trade to which he/she/they is registered.

26.6.4. Only apprentices, as defined in section 3077 of the Labor Code, who are in training under apprenticeship standards and written apprentice agreements under chapter 4

(commencing at section 3070), division 3, of the Labor Code, are eligible to be employed. The employment and training of each apprentice shall be in accordance with the provisions of the apprenticeship standards and apprentice agreements under which he/she/they is training.

26.6.5. Pursuant to Labor Code section 1777.5, if that section applies to this Contract as indicated above, Contractor and any Subcontractors employing workers in any apprenticeable craft or trade in performing any Work under this Contract shall apply to the applicable joint apprenticeship committee for a certificate approving the Contractor or Subcontractor under the applicable apprenticeship standards and fixing the ratio of apprentices to journeymen employed in performing the Work.

26.6.6. Pursuant to Labor Code section 1777.5, if that section applies to this Contract as indicated above, Contractor and any Subcontractor may be required to make contributions to the apprenticeship program.

26.6.7. If Contractor or Subcontractor willfully fails to comply with Labor Code section 1777.5, then, upon a determination of noncompliance by the Administrator of Apprenticeship, it shall:

26.6.7.1.Be denied the right to bid on any subsequent project for one (1) year from the date of such determination;

26.6.7.2.Forfeit as a penalty to District the full amount as stated in Labor Code section 1777.7. Interpretation and enforcement of these provisions shall be in accordance with the rules and procedures of the California Apprenticeship Council and under the authority of the Chief of the Division of Apprenticeship Standards.

26.6.8. Contractor and all Subcontractors shall comply with Labor Code section 1777.6, which section forbids certain discriminatory practices in the employment of apprentices.

26.6.9. Contractor shall become fully acquainted with the law regarding apprentices prior to commencement of the Work. Special attention is directed to sections 1777.5, 1777.6, and 1777.7 of the Labor Code, and title 8, California Code of Regulations, section 200 et seq. Questions may be directed to the State Division of Apprenticeship Standards, 455 Golden Gate Avenue, 9th floor, San Francisco, California 94102.

26.7. <u>Non-Discrimination</u>

26.7.1. Contractor herein agrees to comply with the provisions of the California Fair Employment and Housing Act as set forth in part 2.8 of division 3 of the California Government Code, commencing at section 12900; the Federal Civil Rights Act of 1964, as set forth in Public Law 88-352, and all amendments thereto; Executive Order 11246; and all administrative rules and regulations found to be applicable to Contractor and Subcontractor.

26.7.2. Special requirements for Federally Assisted Construction Contracts: During the performance of this Contract, Contractor agrees to incorporate in all subcontracts the provisions set forth in Chapter 60-1.4(b) of Title 41 published in Volume 33 No. 104 of the Federal Register dated May 28, 1968.

26.8. Labor First Aid

Contractor shall maintain emergency first aid treatment for Contractor's workers on the Project which complies with the Federal Occupational Safety and Health Act of 1970 (29 U.S.C. § 651 et seq.) and the California Occupational Safety and Health Act of 1973 (Lab. Code, § 6300 et seq.; 8 Cal. Code of Regs., § 330 et seq.).

27. [RESERVED]

28. MISCELLANEOUS

28.1. Assignment of Antitrust Actions

28.1.1. Section 7103.5(b) of the Public Contract Code states:

In entering into a public works contract or subcontract to supply goods, services, or materials pursuant to a public works contract, the Contractor or subcontractor offers and agrees to assign to the awarding body all rights, title, and interest in and to all causes of action it may have under Section 4 of the Clayton Act (15 U.S.C. Sec. 15) or under the Cartwright Act (Chapter 2 (commending with Section 16700) of Part 2 of Division 7 of the Business and Professions Code), arising from purchases of goods, which assignment shall be made and become effective at the time the awarding body tenders final payment to the Contractor, without further acknowledgment by the parties.

28.1.2. Section 4552 of the Government Code states:

In submitting a bid to a public purchasing body, the bidder offers and agrees that if the bid is accepted, it will assign to the purchasing body all rights, title, and interest in and to all causes of action it may have under Section 4 of the Clayton Act (15 U.S.C. Sec. 15) or under the Cartwright Act (Chapter 2 (commencing with Section 16700) of Part 2 of Division 7 of the Business and Professions Code), arising from purchases of goods, materials, or services by the bidder for sale to the purchasing body pursuant to the bid. Such assignment shall be made and become effective at the time the purchasing body tenders final payment to the bidder.

28.1.3. Section 4553 of the Government Code states:

If an awarding body or public purchasing body receives, either through judgment or settlement, a monetary recovery for a cause of action assigned under this chapter, the assignor shall be entitled to receive reimbursement for actual legal costs incurred and may, upon demand, recover from the public body any portion of the recovery, including treble damages, attributable to overcharges that were paid by the assignor but were not paid by the public body as part of the bid price, less the expenses incurred in obtaining that portion of the recovery.

28.1.4. Section 4554 of the Government Code states:

Upon demand in writing by the assignor, the assignee shall, within one year from such demand, reassign the cause of action assigned under this part if the assignor has been or may have been injured by the violation of law for which the cause of action arose and (a) the assignee has not been injured thereby, or (b) the assignee declines to file a court action for the cause of action.

28.1.5. Under this Article, "public purchasing body" is District and "bidder" is Contractor.

28.2. Excise Taxes

If, under Federal Excise Tax Law, any transaction hereunder constitutes a sale on which a Federal Excise Tax is imposed and the sale is exempt from such Federal Excise Tax because it is a sale to a State or Local Government for its exclusive use, District, upon request, will execute documents necessary to show (1) that District is a political subdivision of the State for the purposes of such exemption, and (2) that the sale is for the exclusive use of District. No Federal Excise Tax for such materials shall be included in any Contract Price.

28.3. Taxes

Contract Price is to include any and all applicable sales taxes or other taxes that may be due in accordance with section 7051 et seq. of the Revenue and Taxation Code, Regulation 1521 of the State Board of Equalization or any other tax code that may be applicable.

28.4. Shipments

Contractor is responsible for any or all damage or loss to shipments until delivered and accepted on Site, as indicated in the Contract Documents. There must be no charge for containers, packing, unpacking, drayage, or insurance. The total Contract Price shall be all inclusive (including sales tax) and no additional costs of any type will be considered.

28.5. Compliance with Government Reporting Requirements

If this Contract is subject to federal or other governmental reporting requirements because of federal or other governmental financing in whole or in part for the Project of which it is part, or for any other reason, Contactor shall comply with those reporting requirements at the request of the District at no additional cost.

END OF DOCUMENT

REQUEST FOR SUBSTITUTION AT TIME OF BID

Pursuant to Public Contract Code section 3400, bidder submits the following request to Substitute with the bid that is submitted. I understand that if the request to substitute is not an "or equal" or is not accepted by District and I answer "no" I will not provide the specified item, then I will be held non-responsive and my bid will be rejected. With this understanding, I hereby request Substitution of the following articles, devices, equipment, products, materials, fixtures, patented processes, forms, methods, or types of construction:

	Specification Section	Specified Item	Requested Substituted Item	Contractor Agrees to Provide Specified Item if request to Substitute is Denied[1] (circle one)	District Decision (circle one)
1				Yes No	Grant Deny
2				Yes No	Grant Deny
3				Yes No	Grant Deny
4				Yes No	Grant Deny
5				Yes No	Grant Deny
6				Yes No	Grant Deny
7				Yes No	Grant Deny
8				Yes No	Grant Deny
9				Yes No	Grant Deny

Bidder must state whether bidder will provide the Specified Item in the event the Substitution request is evaluate and denied. If bidder states that bidder will not provide the Specified Item the denial of a request to Substitute shall result in the rejection of the bidder as non-responsive. However, if bidder states that bidder will provide the Specified Item in the event that bidder's request for Substitution is denied, bidder shall execute the Agreement and provide the Specified Item(s). If bidder refuses to execute the Agreement due to the District's decision to require the Specified Item(s) at no additional cost, bidder's Bid Bond shall be forfeited.

This Request Form must be accompanied by evidence as to whether the proposed Substitution (1) is equal in quality, service, and ability to the Specified Item; (2) will entail no change in detail, construction, and scheduling of related work. (3) will be acceptable in consideration of the required design and artistic effect; (4) will provide no cost disadvantage to the District; (5) will require no excessive or more expensive maintenance, including adequacy and availability of replacement parts; (6) will require no change of the construction schedule or milestones for the Project; and, (7) Contractor agrees to pay for any DSA Fees or other Governmental Plan check costs associated with this Substitution Request. (See General Conditions Section 3.6)

The undersigned states that the following paragraphs are correct:

1. The proposed Substitution does not affect the dimensions shown on the Drawings.

2. The undersigned will pay for changes to the building design, including Architect, engineering, or other consultant design, detailing, DSA plan check or other governmental plan check costs, and construction costs caused by the requested substitution.

3. The proposed substitution will have no adverse effect on other trades, the Contract Time, or specified warranty requirements.

4. Maintenance and service parts will be available locally for the proposed substitution.

5. In order for the Architect or Owners Representative to properly review the substitution request, within five (5) days following the opening of bids, the Contractor shall provide samples, test criteria, manufacturer information, and any other documents requested by Architect or Architect's engineers or consultants, including the submissions that would ordinarily be required under Article 3.7 for Shop Drawings along with a document which provides a side by side comparison of key characteristics and performance criteria (often known as a CSI side by side comparison chart).

6. If Substitution Request is accepted by the District, Contractor is still required to provide a Submittal for the substituted item pursuant to Article 3.7 and shall provide required Schedule information (including schedule fragnets, if applicable) for the substituted item as required under Article 8.3.2.1. The approval of the Architect, Engineer, or District of the substitution request does not mean that the Contractor is relieved of Contractor's responsibilities for Submittals, Shop Drawings, and schedules under Article 3.7 and 8.3.2 if the Contractor is awarded the Project.

Name of Bidder:_____

By: _____

District:_____

By: _____

SECTION 01 11 00

SUMMARY OF WORK

PART 1 — GENERAL

1.1 WORK REQUIRED BY CONTRACT DOCUMENTS

A. Drawings and general provisions of the Contract, including the Conditions of the Contract and Division 01 Specification Sections apply to this Section.

B. The work of this project consists of, but is not limited to the Scope of Work listed below. This scope is for information purposes only. It is the responsibility of the contractor to perform all work as shown, specified and required based upon the contract documents (drawings, specifications, addenda, as well as manufacturer recommendations and NRCA standards.)

1.2 SUMMARY

A. Section includes removal and replacement of the existing roofing systems as specified with all applicable details for a complete watertight warrantied roofing assembly per the manufacturers instructions.

B. Related Work Specified Elsewhere:

1. Section 01 - Owner Supplied Materials
2. Section 06 - Rough Carpentry
3. Section 07 - Roof Insulation
4. Section 07 - Modified Bitumen Membrane Roofing
5. Section 07 - Sheet Metal Flashing and Trim

1.3 WORK COVERED BY CONTRACT DOCUMENTS

A. Project Identification: Fremont Elementary School Re-Roofing Project 2026-1

B. Project Location: Fremont Elementary School 2150 S St. Merced, CA 95340

C. Owner: Merced City School District 444 W. 23rd St. Merced, CA 95340

D. General scope of work but not limited to;

1. **<u>Re-Roofing;</u>**

2. Includes removal and disposal of existing roofing system(s), insulation board, gutters, downspouts, flashings, copings, etc. for a complete prepared roof surface.

3. Include one hundred (100) square feet of decking replacement included in the base bid price. A per square foot price will be inserted into the bid form for anything needed and approved by the district over 100 square feet. Photos are required of all dryrot replacement with billing for anything over 100 square feet. Install one layer of rosin paper over the entire wood roof deck at the low slope roof section only.

4. Install new wood nailers at all perimeter edges and fasten at 6” on center staggered.

5. Raise all roof curbs to a minimum of 8” above the finished roof height including new sheet metal 24 gauge galvanized pan installed over one layer of membrane loose laid.

6. Install one layer of 2” Polyiso Insulation Board and Tapered Polyiso Insulation Crickets, over one layer of HPR Glasbase fasten with screws and plates per manufacturer’s specifications.

7. Install one layer of ½” Wood Fiber Roof Board in Insuloc Insulation Adhesive.

8. Install one layer of Flexbase 80 in WeatherKing Plus WC Adhesive at all low slope roof areas. Utilize Flashing Bond Mastic for all vertical walls, curbs, etc.

9. Install one layer of Stressply Plus FR Mineral in WeatherKing Plus WC Adhesive at all low slope roof areas. Utilize Flashing Bond Mastic for all vertical walls, curbs, etc.

10. Install new, properly sized 4lb lead flashings at all pipe penetrations, install a factory lead cap at all vent flashings, install a lead umbrella flashing at all electrical penetrations.

11. Install new vents at all locations and incorporate into the roof system per manufacturers details. Remove and replace with custom sheet metal curb cap style sheet metal vents at all curb locations.

12. At all fixed pipe support locations remove and save for re-use all of the existing 24-gauge sheet metal pan and uni struts. Install all sheet metal pans and re-attach to the conduit.

13. Install new C-Port rubber blocks at all condensate, electrical, etc. for support blocking at the required or sufficient distance to properly support the conduit or lines. Install Stressply Plus FR Mineral slip sheet under each block.

14. Install walkway pad from the ladder access or roof hatch to and around all HVAC units and under all support blocking.

15. Install new 24 gauge pre-finished edge metal at all existing locations with a 22 gauge galvanized continuous cleat metal. Fasten all edge metal at flashings at 3” on center staggered. The deck flange shall be sanded down to promote adhesive adhesion.

16. Install new 24 gauge pre-finished gutter & downspouts at all eve locations. Install an expansion joint at 50’ max intervals. Install a downspout screen at each downspout location.

17. Install new 24 gauge pre-finished coping with 22 gauge cleat at all perimeter walls and where existing slope to the interior.

18. Install new 24 gauge galvanized sheet metal skirt flashing at all HVAC and roof curbs.

19. Install yellow “Gas Line” stickers on all gas lines running across the roof a minimum of 12’ apart.

20. Remove all condensate lines and from the HVAC units **AFTER THE TRAP** and save for re-installation. Use pvc or water hose to protect the building from condensation during the course of re-roofing. When complete with the roofing re-install all condensate lines and properly support each line.

21. All roof drains shall be inspected to be free and clear prior to the job start as any that are not free flowing and clear at the end of the project will be the responsibility of the roofing contractor to properly address.

1.4 WORK COMPLETED BY THE DISTRICT

A. No work will be completed by the district. All electrical, plumbing, etc. work that s needed such as raising a pipe or flashing to meet the manufacturers criteria shall be part of the contractor's bid.

1.5 TYPE OF CONTRACT

A. Work will be completed under a single prime contract for all labor and non-owner supplied materials. The owner will supply the materials shown in the owner supplied materials specification section.

1.6 USE OF PREMISES

A. General: Contractor will have limited use of premises for construction operations.

B. Use of site: Limit use of premises to work areas required. Do not disturb portions of the project site beyond areas in which the work is indicated.

C. The building interior is off limits to the contractor. All access shall be from the exterior.

D. The point of exterior access must be approved by the owner.

E. Entrances: Keep all entrances serving the building clear and available to the owner, owner's employees, and emergency vehicles.

F. Use of existing building: Maintain existing building in a weather tight condition throughout the construction period. Repair damage caused by construction operations. Protect building and occupants during construction.

G. Vehicle Parking: Contractor parking is available on site and will need to be approved by the owner.

H. Assume full responsibility for protection and safekeeping of materials stored on premises. Coordinate the location of materials and equipment to be stored on premises. Provide barricades, barriers, and enclosures as required to ensure safety.

1.7 OWNERS OCCUPANCY REQUIREMENTS

A. The owner will occupy the building during the entire construction phase. Cooperate with the owner during construction operations to minimize owner conflicts and facilitate owner usage. Perform the work as to not interfere with owners operations.

B. A minimum of 72 hours notice is needed for all activities that will affect the owners operations.

1.8 WORK RESTRICTIONS

A. On site work hours: Work shall generally be performed from the hours of 7:00 am – 5:00 pm Monday through Friday except as otherwise indicated or approved by the owner.

1. Weekend hours, early morning hours, utility shut down, and noisy activity requires owner's authorization a minimum of 72 hours in advance.

1.9 UNIT PRICES

A. The following unit prices will be used to add or deduct from the total contract amount.

a. Unit-1 Replacement of dryrot wood roof decking, add a line items per square foot cost to proposal form.

b. Unit-2 Replacement of dryrot wood fascia board, add a line item per square foot cost to proposal form.

1.10 SCHEDULE OF ALTERNATES

A. None

1.11 PROJECT CONDITIONS

A. Proceed with roofing work only when existing and forecasted weather conditions will permit a unit of work to be installed in accordance with manufacturer's recommendations and warranty requirements.

B. Do not apply roofing insulation or membrane to damp deck surface.

C. Do not expose materials subject to water or solar damage in quantities greater than can be weatherproofed during same day.

1.12 SEQUENCING AND SCHEDULING

A. Sequence installation of roofing with related units of work specified in other sections to ensure that roof assemblies, including roof accessories, flashing, trim and joint sealers, are protected against damage from effects of weather, corrosion and adjacent construction activity.

B. Complete all roofing field assembly work each day. Phased construction will not be accepted

1.14 PROJECT TIME LINE

A. Project Complete - 8/7/26

B. Project Start - 6/8/26

C. Board Meeting to Award - 5/12/26

D. Bid Date - 4/16/26 @ 2:00 pm

E. Last Day for Questions - 4/9/26 @ 5:00 pm

F. Pre Bid Meeting - 3/31/26 @ 10:00 am

END OF SECTION 01 11 00 – SUMMARY OF WORK

ALL AREAS INCLUDED
IN THE CONTRACT
John C. Fremont Elementary School
John C. Fremont Elementary School

SECTION 01 33 00

SUBMITTALS AND SUBSTITUTIONS

PART 1 – GENERAL

1.1 DESCRIPTION

A. Work included:

1. Wherever possible throughout the Contract Documents, the maximum acceptable quality of workmanship and materials has been defined by manufacturer's name and catalog number, reference to recognized industry and government standards, or description of required attributes and performance.
2. To ensure that the specified products are furnished and installed in accordance with design intent, procedures have been established for advance submittal of design data and for their review by the Architect.
3. Make all submittals required by the Contract Documents and revise and re-submit as necessary to establish compliance with the specified requirements.

B. Related work described elsewhere: Individual requirements for submittals are described in pertinent sections of these Specifications. Refer also to General Conditions, Article 11. Substitutions.

1.2 QUALITY ASSURANCE

A. Coordination of submittals: Prior to each submittal, carefully review and coordinate all aspects of each item being submitted and verify that each item and the submittal for it conforms in all respects with the requirements of the Contract Documents. By affixing the Contractor's signature to each submittal, certify that this coordination has been performed.

B. Certificates of compliance:

1. Certify that all materials used in the work comply with all specified provisions thereof. Certification shall not be construed as relieving the Contractor from furnishing satisfactory materials if, after tests are performed on selected samples, the material is found to not meet specified requirement.
2. Show on each certification the name and location of the Work, name and address of Contractor, quantity and date or dates of shipment or delivery to which the certificate applies, and name of the manufacturing or fabricating company. Certification shall be in the form of letter or company-standard forms containing all required data. Certificates shall be signed by an officer of the manufacturing or fabricating company.

3. In addition to the above information, all laboratory test reports submitted with certificates of compliance shall show the date or dates of testing, the specified requirements for which testing was performed, and results of the test or tests.

1.3 SUBMITTALS

A. Certificates of Compliance: Upon completion of the work, and as a condition of its acceptance, submit to the Architect all certificates of compliance.

B. Procedures: Make submittals in strict accordance with provisions of this section.

C. Quantity: Provide a minimum of seven (7) submittals. Two (2) to be retained by the Architect and Consultant/Engineer; One (1): District; One (1) Inspector of Record, and a minimum of Three (3) to be returned to the Contractor.

D. Submittal Schedule: Pursuant to Article 3 of the General Conditions, provide a submittal schedule as outlined. Provide updated copies of the schedule, including status of all submittals, at the project meetings.

E. Provide digital copies of submittal.

PART 2 – PRODUCTS

2.1 SHOP DRAWINGS AND COORDINATION DRAWINGS

A. Shop drawings:

1. Scale and measurements: Make all shop drawings accurately to a scale sufficiently large to show all pertinent aspects of the item and its method of connection to the work. Specifically call to the Architect's attention any deviation from the Contract requirements.
2. Copying of the Contract Documents for purposes of revisions or as base sheets for the required submittal is expressly prohibited.
3. Quantities and type of prints required: Submit all shop drawings in the form of one sepia transparency of each sheet plus 3 blue-line or black-line prints of each sheet. Blueprints will not be acceptable. Additionally on a digital DVD containing PDF files.
4. Reproduction of review shop drawings: Printing and distribution of review shop drawings for the Architect's use will be by the Architect. All review comments of the Architect will be shown on the sepia transparency when it is returned to the Contractor. The Contractor shall make and distribute a minimum of six (6) copies as directed by the Architect.

5. Provide digital copies of shop drawings.

2.2 MANUFACTURERS' LITERATURE

A. General: Where contents of submitted literature from manufacturers includes data not pertinent to the submittal, clearly indicate which portion of the contents is being submitted for review.

B. Number of copies required: Submit the number of copies required to be returned plus four (4) copies that will be distributed by the Architect.

2.3 SAMPLES

A. Accuracy of samples: Samples shall be of the precise article proposed to be furnished.

B. Number of samples required: Unless otherwise specified, submit all samples in the quantity that is required to be returned plus 2 that will be retained by the Architect.

C. Reuse of Samples: In situations specifically so approved by the Architect, the Architect's retained sample may be used in the construction as one of the installed items.

2.4 COLORS AND PATTERNS

A. Unless the precise color and pattern is specifically described in the Contract Documents, and whenever a choice of color or pattern is available in a specified product, submit accurate color and pattern charts to the Architect for review and selection.

2.5 SUBSTITUTIONS

A. Approval required by the owner and architect:

1. The Contract is based on the standards of quality established in the Contract Documents. All substitutions of the specified product(s) shall be submitted 10 days prior to the opening of the bid.

2. The Products specified are intended and the Standard of Quality for the products required for this project. If other products are proposed the bidder must disclose in the bid the manufacturer and the products that they intend to use on the Project. If no manufacturer and products are listed, the bid may be accepted only with the use of products specified.

3. Bidder will not be allowed to change materials after the bid opening date.

4. If alternate products are included in the bid, the products must be equal to or exceed the products specified. Supporting technical data shall be submitted to the Architect/ Owner for approval prior to acceptance.

5. In making a request for substitution, the Bidder/Roofing Contractor represents that it has:
   a. Personally investigated the proposed product or method, and determined that it is equal or superior in all respects to that specified.
   b. Will provide the same guarantee for substitution as for the product and method specified.
   c. Will coordinate installation of accepted substitution in work, making such changes as may be required for work to be completed in all respects.
   d. Will waive all claims for additional cost related to substitution, which consequently become apparent.
   e. Cost data is complete and includes all related cost under his/her contract or other contracts, which may be affected by the substitution.
   f. Will reimburse the Owner for all redesign cost by the Architect for accommodation of the substitution.

6. Architect/ Owner reserves the right to be the final authority on the acceptance or rejection of any or all bids, proposed alternate roofing systems or materials that has met ALL specified requirement criteria.

7. Failure to submit substitution package, or any portion thereof requested, will result in immediate disqualification and consideration for that particular contractors request for manufacturer substitution.

PART 3 – EXECUTION

3.1 IDENTIFICATION OF SUBMITTALS

A. General:

1. Forward all submittals to the office of the Project Manager.
2. All shipping charges shall be prepaid.
3. Consecutively number all submittals.
4. Accompany each submittal with a letter of transmittal containing all pertinent information required for identification and checking of submittals, including the following:

a. Project name and location.
b. Architect's job number.
c. Subcontractor's, vendor's and/or manufacturer's name and address.
d. Product identification.
e. Drawing title, number, and date: and revision number and date, if applicable.
f. Applicable Contract Drawings' sheet and detail numbers, along with Specifications' section number and specific paragraphs.
g. Numbers of applicable reference standards specified (ASTM, FS, etc.) and all other additional data as may be required by the Specifications.
h. State any deviation from Contract documents and Justification therefore.

B. Internal identification: On at least the first page of each copy of each submittal, and elsewhere as required for positive identification, clearly indicate the submittal number in which the item was included.

C. Re-submittals: When material is re-submitted for any reason, transmit under a new letter of transmittal and with a new submittal number and reference to original submittal number.

D. Submittal log: Maintain an accurate submittal log for the duration of the Contract, showing current status of all submittals at all times. Make the submittal log available for the Architect's review upon request and distribute copies monthly to Architect and District.

3.2 COORDINATION OF SUBMITTALS

A. General: Prior to submittal for approval, use all means necessary to fully coordinate all materials including, but not necessarily limited to:

1. Determining and verifying all interface conditions, catalog numbers, and similar data.
2. Coordination with other trades as required.
3. Clearly indicating all deviations from requirements of the Contract Documents.

B. Group of submittals: Unless otherwise specified, make all submittals in groups containing all associated items to ensure that information is available for checking each item when it is received. Partial submittals may be rejected as not complying with the provisions of the Contract Documents and the Contractor shall be strictly liable for all delays so occasioned.

3.3 TIMING OF SUBMITTALS

A. General: Within 35 days after Contract award, Contractor shall submit for Architect's written approval a list of all items he and his subcontractors propose to use in the work; also the particular brand of any article where more than one is specified as a standard. Make all submittals far enough in advance of scheduled dates for installation to provide all time required for reviews, for securing necessary approvals form the Division of the State Architect, including the Department of Fire and Life Safety (formerly referred to as the State Fire Marshall), for possible revisions and re-submittals, and for placing orders and securing delivery.

B. Review time: In scheduling, allow at least 14 calendar days for review by the District following receipt of the submittal.

C. Delays: Delays caused by tardiness in receipt of submittals will not be an acceptable basis for extension of the Contract completion date.

3.4 ARCHITECT'S REVIEW

A. General: Review by the Architect shall not be construed as a complete check, but only that the general method of construction and detailing is satisfactory. Review shall not relieve the Contractor from responsibility for errors that may exist.

B. Authority to proceed: The notations "reviewed", or "Furnish As Corrected" authorize the Contractor to proceed with fabrication, purchase, or both, of the items so noted, subject to the revisions, if any, required by the Architect's review comments.

C. Revisions: Make all revisions required by the Architect. If the Contractor considers any required revision to be a change, he shall so notify the Architect as proved for under "Changes and Extra Work" in the General Conditions, Show each drawings revision by number, date, and subject in a revision block on the drawing. Make only those revisions directed or approved by the Architect.

5. APPROVED SUBMITTALS

A. Materials, fabricated articles and other items to be installed in permanent work shall be those of approved submittals only and shall not be fabricated, delivered or incorporated in the work until submittals are approved as provided herein.

B. Approval or acceptance of items will not preclude rejection of any item upon discovery of defects in them prior to final acceptance of completed work.

C. After an item has been approved, no charge in brand or make will be permitted unless:

1. Satisfactory written evidence is presented to and approved by the Architect that manufacturer cannot make scheduled delivery of approved item; or
2. The item delivered has been rejected and substitution of a suitable item is an urgent necessity; or other conditions become apparent that indicate approval of such substitute item to be best interest of District.

3.6 CALCULATIONS OR TEST DATA

A. The manufacturer or supplier of certain products will be required to submit substantiating data to show compliance with structural requirements (including seismic) for items in this Specification.

B. All calculations shall be prepared by a structural engineer licensed in California, and all test data shall be by an independent testing lab.

C. Submittals shall be made to Architect, who will review and comment and forward to the Division of the State Architect for final approval.

END OF SECTION

SECTION 01 64 00

OWNER FURNISHED CONTRACTOR INSTALLED (O.F.C.I)

PART 1 - GENERAL

1. SUMMARY

A. DESCRIPTION: The Owner shall procure and provide certain products for installation as shown and specified per Contract Documents.

B. RELATED WORK SPECIFIED ELSEWHERE:

1. General: Products furnished and paid for by the Owner are described in the following technical sections and /or in the Drawings as O.F.C.I. materials.

2. Note that this project includes the installation of owner-supplied materials as noted in this specification section only. All materials not specifically listed below will be the responsibility of the contractor to provide and install.

2. DEFINITIONS

A. GENERAL: The following are used to identify products as noted on the Drawings.

B. OWNER FURNISHED CONTRACTOR INSTALLED (O.F.C.I.): Products or equipment furnished by the Owner for installation under this contract.

C. OWNER FURNISHED OWNER INSTALLED (O.F.O.I.): Products or equipment to be provided and installed by the Owner, but requiring surfacing, backing, utility connections or other preparation under this contract, for proper installation.

D. NOT IN CONTRACT (N.I.C.): Products or equipment to be provided and installed by Owner, not requiring surfacing, backing, utility connections or other preparation under this contract.

PART 2 - PRODUCTS

1. PRODUCTS

A. ROOFING MATERIAL FURNISHED BY OWNER (O.F.C.I.): District supplied material. Related specification sections include;

1. Section 07 22 00 – Roof Insulation
2. Section 07 55 00 - Modified Membrane Roofing
3. Section 07 62 00 - Sheet Metal Flashing and Trim

B. MATERIAL LIST

1. The Owner will only supply the quantity listed in the owner supplied materials section of this specification below. All additional materials and accessories will be the full responsibility of the contractor to provide and install per the specification and project requirements.
2. Any and all material or accessories required for the installation of the roof system in excess of the district provided material must be supplied and installed by the Contractor. It is up to the Contractor to determine the precise amount of material required for the completion of this project; and to provide excess material, as required. The cost to handle and break flashing metal from the District provided flat stock is contractor's responsibility.

3. All required flashings as required per each specification section for plumbing, electrical, gas, etc. will be the Contractors responsibility to provide and install as well as to be included in the bid cost.

4. All materials not specifically included in the owner supplied materials section will be the responsibility of the contractor to provide and install in compliance with the respective specification section. Below is the list of materials the owner will provide.

5. Freight charges of owner supplied materials will be the responsibility of the Owner.

6. Contractor must coordinate and take delivery of materials, count all materials and ensure it matches the list below, unload and properly locate materials at the job site, and properly protect, cover and store at the job site. Owner supplied list below.

7. Contractor must be able to provide certification in writing from roof system manufacturer that the contractor is approved to install the specified roof system and provide all warranty requirements of each respective specification section.

8. Materials specifically provided by the owner;

440.00	Stressply Plus FR Mineral, 75 sq ft per rl
330.00	Flexbase 80, 100 sq ft per rl
24.00	Weatherking Plus WC, 55 gallon drum
20.00	Weatherking Plus Flashing Adhesive, 5 gallon pail
3.00	Garmesh 6" x 150'
3.00	Garla-Prime VOC, 5 gallon pail
20.00	Flashing Bond Mastic, 5 gallon pail
16.00	Pyramic Plus Lo Acrylic Coating, 55 gallon drum
30.00	Tuff Stuff Urethane Caulking 10.1 oz tube (White)
100.00	Garla Flex Mastic 10 oz Tube
50.00	Pre-Finished Flat Stock 24 gauge 4'x10' Sheet Standard Color
1.00	Skid Charge (Per 50 Sheets)
2.00	R-Mer Seal Self Adhering Underlayment 200 sq ft per roll
110.00	HPR Glasbase 300 sq ft per roll
55.00	Insuloc HR Insulation Adhesive 150 sq ft p/cart / 4 cart p/case

PART 3 - EXECUTION

1. OWNER'S RESPONSIBILITIES

   A. SUBMITTALS: Arrange for and deliver necessary shop drawings, product data and samples to Contractor.

   B. DELIVERY:

      1. General: Arrange and pay for product delivery to site, in accordance with construction schedule.
      2. Bill of Materials: Deliver supplier's documentation to Contractor.
      3. Inspection: Inspect jointly with Contractor.
      4. Claims: Submit for transportation damage and replacement of otherwise damaged, defective, or missing items.

   C. GUARANTEES: Arrange for manufacturer's warranties, bonds, service, inspections, as required.

2. CONTRACTOR'S RESPONSIBILITIES

   A. SUBMITTALS: Review shop drawings, product data and samples and submit to Architect and/ or Owner with notification of any discrepancies or problems anticipated in use of product.

   B. DELIVERY:

      1. General: Designate delivery date for each product in Progress Schedule.
      2. Receiving: Receive and unload products at site. Handle products at site, including uncrating and storage.
      3. Inspection: Promptly inspect products jointly with Owner; record shortages, damaged or defective items. Shortages and/or damage must be noted at the time of delivery by the contractor no claims may be made after the fact.
      4. Storage: Protect products from damage or exposure to elements per the manufactures requirements.

   C. INSTALLATION:

      1. General: Assemble, install, connect, adjust and finish products, as stipulated in the respective section of Specifications.
      2. Repair and Replacement: Items damaged during handling and installation.
      3. Install all O.F.C.I. products per the specifications and manufacturer instructions.
      4. All products not supplied by the owner are the responsibility of the contractor to supply and install per manufacturers instructions.

END OF SECTION

SECTION 06 10 00
ROUGH CARPENTRY

PART 1 - GENERAL

1.1 RELATED DOCUMENTS:

A. Drawings and general provisions of Contract, including General and Supplementary Conditions and other Division-1 Specification sections, apply to work of this section.

B. Related work specified elsewhere:

1. Division 01: Summary of Work
2. Section 07 - Roof Insulation
3. Division 07: Modified Membrane Roofing
4. Division 07: Sheet Metal Flashing and Trim

1.2 SUMMARY:

A. This portion of the specification sets forth the general requirements, including the quality and type of materials required for the installation of all pressure treated and non pressure treated lumber used for wood curbs, nailing strips, miscellaneous blocking material, unexposed fillers, fascia, edging strips, deck replacement, etc

1.3 STORAGE:

A. All material specified herein shall be stored (after delivery to the site) so that it will be fully protected from damage and weather, and shall be stacked to prevent damage. All lumber shall be fully protected to maintain the original required moisture content as specified in item titled "Moisture Content".

1.4 OTHER REQUIREMENTS:

A. Dimensions indicated on the drawings are nominal dimensions (except where details show actual sizes) and shall be subject to the standard reductions required for surfacing or tolerances permitted by the grading rules. Unless otherwise indicated on drawings, all material shall be S4S (surfaced four sides).

1.5 PROTECTION:

A. All finished work shall be adequately protected against damage from any source.

1.6 COORDINATION:

A. Carpenters shall coordinate their work with that of the other trades so that progress continues without interruption.

PART 2 - PRODUCTS

2.1 WOOD - FRAMING AND CURBS:

A. GRADING RULES, GRADES, AND SPECIES

1. Lumber: Southern Pine, yellow pine, Douglas fir, spruce, ponderosa pine, larch or Hemlock and shall meet the following minimum grade requirement of construction standard (75% #1 and 25% #2); free from warping and visible decay. Lumber shall be graded according to the standard grading rules of the Southern Pine Inspection Bureau, the West Coast Lumber Inspection Bureau, or the Western Wood Products Association.

B. MOISTURE CONTENT

1. All lumber shall be air-dried or kiln-dried before treatment, so that the moisture content is not more than 19%. After treatment, it shall be kiln-dried at temperatures not exceeding 160 degrees F. (71 degrees C) so that the moisture content is not more than 19% at time of shipment

C. DECAY-RESISTANT TREATMENT:

1. Lumber in contact with roofing or acting as fascias, and all other exterior lumber, shall be pressure-treated with a waterborne preservative in accordance with AWPA Specification P5. Creosote and oil-borne preservatives are not acceptable.

2. Treating processes, material conditions, plant equipment, and other pertinent requirements shall conform to AWPA Specifications C1 and C2 for specific kind of lumber and type of preservative to be used. Retention shall be as required for intended use.

3. All treated lumber shall bear the mark of a code recognized third party agency such as the AWPA.

D. PLYWOOD:

Grade: CDX or Cyme exterior Grade. Description: 5/8" thick

E. WOOD SIDING:

1. T 111 or approved equal.

2.2 MECHANICAL FASTENERS:

A. WOOD TO STEEL:

1. Acceptable Manufacturers:
   a. Roofgrip screw with Climaseal coating; plastic disc - Buildex Div. of ITW, Itasca, IL.
   b. Dekfast screw with Sentri coating: plastic disc – Construction Fasteners, Inc., Wyomissing, PA.
   c. Fabco Fastening Systems, West Newton, PA: Insul-Fixx screw with Fabcote coating; plastic plate, Plate-Fixx screw with Fabcote coat; plastic disc.
   d. Kwik-Deck screw with Oxyseal coating; plastic disc - Atlas Bolt & Screw Div., Trans Union Fastener Corp., Ashland, OH.
   e. Olympic #12-11 Standard Steel Deck Screw or #14-10 Heavy Duty All Purpose Screw with CR-10 coating; three inch diameter plastic - Olympic Manufacturing Group, Inc., Agawam, MA.
   f. Glasfast (plastic disc) - Owens-Corning Fiberglas Corp., Toledo, OH.
   g. Perma Fastener screw with permaseal coating; plastic plate - International Permalite, Inc., Oak Brook, IL.

2. Screw Length: Sufficient to engage steel, wood deck 1 inch.

B. WOOD TO WOOD:

1. Type: Galvanized, common, annular ring nail. Length: Sufficient to penetrate underlay blocking 1-1/4 inches.

2. Acceptable Manufacturers:

   a. Hillwood Manufacturing Co., Cleveland, OH.
   b. Independent Nail, Inc., Bridgewater, MA.
   c. W.H. Maze Co., Peru, IL.
   d. National Nail Corp., Grand Rapids, MI.

C. WOOD TO MASONRY:

1. Acceptable Manufacturers:

   a. Tapcon 1/4" diameter, Phillips pan head anchor - Buildex Div. of ITW, Itasca, IL.
   b. Confas - Construction Fasteners, Inc., Wyomissing, PA.
   c. Con-fixx - Fabco Fastening Systems, West Newton, PA.
   d. #14-10 Heavy Duty all Purpose Screw – Olympic Manufacturing Group, Inc., Agawam, MA.
   e. Tru-Fast fastener (stainless steel) - The Tru-Fast Corp., Bryan, OH.

2. Length: Sufficient to provide 1-1/2 inch embedment.

.

D. WOOD TO HOLLOW MASONRY:

1. Acceptable Manufacturers:

a. Sleeve Anchor by Hilti Fastening Systems, Tulsa, OK.
b. Rawly Hollow Masonry Anchor by the Rawlplug Co., Inc., New Rochelle, NY.

2. Length: As recommended by manufacturer

PART 3 - EXECUTION

3.1 CARPENTRY:

A. At roof edge to receive metal fascia, around all roof top penetration perimeters, and under any flashing component that is to have a roof flange mechanically fastened to roofing substrate; mechanically attach wood blocking. Blocking thickness: Equal to common 1 x 4”, 1 x 6” 2x4”, 2x6”, 2x8”, 2x10”, 2x12”.

B. Fasteners shall be installed in two rows staggered. Spacing in any one row shall not exceed 24 inches. Within eight feet of outside corners, spacing shall not exceed twelve inches in any one row.

C. Where required, offset blocking layers twelve inches, weave corners.

D. When preservative treated wood is cut, the cut end shall be treated in accordance with AWPA Specification M4.

E. Lumber shall be accurately cut to the work requirements and shall be well fastened.

F. Bolted fastenings shall have washers of adequate size under both heads and nuts. Nails shall be of correct size and quantity for proper fastening. Oversized nails that will result in splitting shall not be used. All fasteners shall be galvanized per ASTM A 153.

END OF SECTION

SECTION 07 22 00

ROOF INSULATION

PART 1 – GENERAL

1. RELATED DOCUMENTS

A. Drawings and general provisions of the Contract, including the Conditions of the Contract and Division 01 Specification Sections apply to this section.

2. SUMMARY

A. Section includes roof insulation over the properly prepared deck substrate.

B. Related Sections:

1. Section 01 11 00 - Summary of Work
2. Section 01 30 00 - Submittals
3. Section 06 10 00 - Rough Carpentry
4. Section 07 50 50 - Modified Membrane Roofing
5. Section 07 62 00 – Sheet Metal Flashing and Trim

3. REFERENCES

A. American Society for Testing and materials (ASTM):

1. ASTM C165 Standard Test Method for Measuring Compressive Properties of Thermal Insulation.
2. ASTM C208 Standard Specification for Cellulosic Fiber Insulation Board.
3. ASTM C209 Standard Test Method for Cellulosic Fiber Insulating Board.
4. ASTM C272 Standard Test Method for Water Absorption of Core Materials for Structural Sandwich Constructions.
5. ASTM C1396 Standard Specification for Gypsum Wallboard.
6. ASTM C518 Standard Test Method for Steady-State Heat Flux Measurements and Thermal Transmission Properties by Means of the Heat Flow Meter Apparatus.
7. ASTM C578 Standard Specification for Perlite Thermal Insulation Board.
8. ASTM C728 Standard Test Methods for Fire Test of Roof Coverings.
9. ASTM C1289 Standard Specification for Faced Rigid Polyisocyanurate Thermal Insulation.
10. ASTM D5 Standard Test Method for Penetration of Bituminous Materials.
11. ASTM D36 Standard Test Method for Softening Point of Bitumen (Ring and Ball Apparatus).
12. ASTM D312 Standard Specification for Asphalt Used in Roofing.
13. ASTM D412 Standard Test Methods for Vulcanized Rubber and Thermoplastic Rubbers and Thermoplastic Elastomers-Tension.
14. ASTM D1621 Standard Test Method for Compressive Properties of Rigid Cellular Plastics.

15. ASTM D1622 Standard Test Method for Apparent Density of Rigid Cellular Plastics.
16. ASTM D2126 Standard Test Method for Response off Rigid Cellular Plastics to Thermal Humid Aging.
17. ASTM D2178 Standard Specification for Asphalt Glass Felts used in Roofing and Waterproofing.
18. ASTM D4601 Standard Specification for Asphalt-Coated Glass Fiber Base Sheet Used in Roofing.
19. ASTM D5147 Standard Sampling and Testing Modified Bituminous Sheet Material.

B. Factory Mutual Research (FM):
   1. Roof Assembly Classifications.

D. National Roofing Contractors Association (NRCA):
   1. Roofing and Waterproofing Manual.

E. Underwriters Laboratories, Inc. (UL):
   1. Fire Hazard Classifications.

F. Warnock Hersey (WH):
   1. Fire Hazard Classifications.

G. Sheet Metal and Air Conditioning Contractors National Association (SMACNA)

H. Steel Deck Institute, St. Louis, Missouri (SDI)

I. Southern Pine Inspection Bureau, Pensacola, Florida (SPIB)

J. Insulation Board, Polyisocyanurate (FS HH-I-1972)

K. Insulation Board, Thermal (Fiberboard) (FS LLL-1-535B)

1.4. SUBMITTALS

A. Product Data: Provide manufacturer's specification data sheets for each product in accordance with Division 01 Section Submittal Procedures. 013000.

B. Provide approval letters from insulation manufacturer for use of their insulation within this particular roofing system type.

C. Provide a sample of each insulation type.

D. Shop Drawings
   1. Submit manufacturer's shop drawings indicating complete installation details of tapered insulation system, tapered insulation crickets, including identification of each insulation block, sequence of installation, layout, drain locations, roof slopes, thicknesses, crickets and saddles.
   2. Shop drawing shall include: Outline of roof, location of drains, a complete board layout of tapered insulation components, thickness and the average "R" value for the completed insulation system.

E. Certification

1. Submit roof manufacturer's certification that insulation fasteners furnished are acceptable to roof manufacturer.
2. Submit roof manufacturer's certification that insulation furnished is acceptable to roofing manufacturer as a component of roofing system and is eligible for roof manufacturer's system warranty.
3. Roof manufacturer's certification that insulation fasteners furnished are acceptable to roof manufacturer.
4. Roof manufacturer's certification that insulation furnished is acceptable to roofing manufacturer as a component of roofing system and is eligible for roof manufacturer's system warranty.
5. Wind uplift calculation, per CBC, Chapter 15, 1504 utilizing ASCE 7-10. Wind uplift shall be provided by the roofing system manufacturer. Calculation shall be reviewed by a CA licensed Structural II engineer.

1.5. QUALITY ASSURANCE

A. Fire Classification, ASTM E-108.

B. Manufacturer's Certificate: Certify that roof system furnished is approved by Factory Mutual, Underwriters Laboratories, Warnock Hersey or approved third party testing facility in accordance with ASTM E108, Class A for external fire and meets local or nationally recognized building codes.

C. Manufacturer's Certificate: Certify that the roof system is adhered properly to meet or exceed the requirements of FM 1-90.

D. Pre-installation meeting: Refer to Division 07 roofing specifications for pre-installation meeting requirements.

1.6. DELIVERY, STORAGE AND HANDLING

A. Deliver products to site with seals and labels intact, in manufacturer's original containers, dry and undamaged.

B. Store all insulation materials in a manner to protect them from the wind, sun and moisture damage prior to and during installation. Any insulation that has been exposed to any moisture shall be removed from the project site.

C. Keep materials enclosed in a watertight, ventilated enclosure (i.e. tarpaulins).

D. Store materials off the ground. Any warped, broken or wet insulation boards shall be removed from the site.

1.7. WARRANTY

A. Provide warranty coordinated with the requirements of other sections specifying roof products.

PART 2 – PRODUCTS

2.1 PRODUCTS, GENERAL

A. Refer to Division 01 Section "Common Product Requirements."

B. Basis of Design: Materials, manufacturer's product designations, and/or manufacturer's names specified herein shall be regarded as the minimum standard of quality required for work of this Section. Comply with all manufacturer and contractor/fabricator quality and performance criteria specified in Part 1.

C. Substitutions: Products proposed as equal to the products specified in this Section shall be submitted in accordance with Bidding Requirements and Division 01 provisions.
   1. Proposals shall be accompanied by a copy of the manufacturer's standard specification section. That specification section shall be reviewed by a professional engineer licensed in the state in which the installation is to take place. Substitution requests containing specifications without licensed engineer certification shall be rejected for non-conformance.
   2. Include a list of three (3) projects of similar type and extent, located within a one hundred mile radius from the location of the project. In addition, the three projects must be at least five (5) years old and be available for inspection by the Architect, Owner or Owner's Representative.
   3. Equivalency of performance criteria, warranty terms, submittal procedures, and contractual terms will constitute the basis of acceptance.
   4. The Owner's decision regarding substitutions will be considered final. Unauthorized substitutions will be rejected.

2.2 INSULATION MATERIALS

A. Thermal Insulation Properties and Approved Insulation Boards.
   1. Rigid Polyisocyanurate Roof Insulation; ASTM C1289:
      a. Qualities: Rigid, closed cell polyisocyanurate foam core bonded to heavy duty glass fiber mat facers.
      b. Thickness: **2.0"**
      c. R-Value: **11.4**
      d. Attachment: Mechanically attached per roofing manufactures ASCE 7-16 Wind Uplift requirements.
      e. Compliances: UL, WH or FM listed under Roofing Systems Federal Specification HH-I-1972, Class 1.
      f. Acceptable Products:
         1) ENRGY-3; Johns Manville
         2) H-Shield; Hunter
         3) EnergyGuard; GAF
         4) Approved Equivalent

   2. Tapered Polyisocyanurate Roof Insulation; ASTM C1289:
      a. Qualities: Factory Tapered, closed cell polyisocyanurate foam core bonded to heavy duty glass fiber mat facers.
      b. Thickness: Slope to drain
      c. Average R-Value: **N/A**
      d. Tapered Slope: (Field) **N/A**
      e. Tapered Slope: (Crickets) **1/2" min. or double the deck slope**
      f. Attachment: Mechanically attached per roofing manufactures ASCE 7-16 Wind Uplift requirements.

g. Compliances: UL, WH or FM listed under Roofing Systems Federal Specification HH-I-1972, Class 1
h. Acceptable Products:
   1) ENRGY 3; Johns Manville
   2) EnergyGuard; GAF
   3) H-Shield; Hunter
   4) Approved Equivalent

3. High Density Six Side Primed Fiberboard Roof insulation; ASTM C208
   a. Qualities: Rigid, composed of interlocking fibers factory blended treated with asphalt on six sides.
   b. Board Size: Four feet by Eight feet (4’ x 8’)
   c. Thickness: **1/2"**
   d. Attachment: Adhered in Insuloc Insulation Adhesive per roofing manufacturers ASCE 7-16 wind uplift requirements.
   e. Compliances: UL, WH, FM listed under Roofing Systems. Federal Specification LLL-I-535-B.
   f. Acceptable Manufacturers:
      1) Blue Ridge; Celotex
      2) Temple Inland
      3) GAF Building Materials Corporation
      4) Georgia-Pacific
      5) Approved Equivalent

4. Dens-Deck Prime Roof Board
   a. Qualities: Nonstructural glass mat faced, noncombustible, water-resistant treated gypsum core panel.
   b. Board Size: Four feet by Eight feet (4’x8’).
   c. Thickness: **N/A**
   d. R-Value: **N/A**
   e. Attachment: Mechanically attached per roofing manufacturers ASCE 7-16 wind uplift requirements.
   f. Compliances: UL, WH or FM listed under Roofing Systems.

2.3 RELATED MATERIALS

A. Fiber Cant and Tapered Edge Strips: Performed rigid insulation units of sizes/shapes indicated, matching insulation board or of perlite or organic fiberboard, as per the approved manufacturer.
   1. Acceptable Manufacturers:
      a. The Garland Company, Inc.
      b. Celotex
      c. Johns Manville
      d. GAF
      e. Approved Equivalent

B. Protection Board: Pre-molded semi-rigid asphalt composition board one half (1/2) inch.

C. Roof Board Joint Tape: Six (6) inches wide glass fiber mat with adhesive compatible with insulation board facers.

D. Asphalt: ASTM D312, Type III Steep Asphalt.

E. Roof Deck Insulation Adhesive: Insul-Lock HR - Dual-component, high rise foam adhesive with 45% rapidly renewable material content as recommended by insulation manufacturer and approved by FM indicated ratings.
   1. Tensile Strength (ASTM D412)……250 psi
   2. Density (ASTM D1875)……..8.5 lbs./gal.
   3. Viscosity (ASTM D2556)……22,000 to 60,000 cP.
   4. 2 `Peel Strength (ASTM D903)…..17 lb/in.
   5. 3 `Flexibility (ASTM D816)……Pass @ -70°F

F. Fasteners: Corrosion resistant screw fastener as recommended by roof membrane manufacturer.
   1. Factory Mutual Tested and Approved with three (3) inches coated disc for I-90 rating, length required to penetrate metal deck one inch.
   2. Screws: Concealor #14-13 DP1 as specified per ASCE 7 calculations.

PART 3 – EXECUTION

3.1 EXECUTION, GENERAL

A. Comply with requirements of Division 01 Section “Common Execution Requirements.”

3.2. EXAMINATION

A. Roofing contractor shall be responsible to verify that roof framing system is complete and ready to receive insulation system. Do not proceed with installation until unsatisfactory conditions have been corrected.
   1. Verify that work which penetrates roof deck has been completed.
   2. Verify that wood nailers are properly and securely installed.
   3. Verify the roof deck has proper slope to drain.
   4. Verify that penetrations are a minimum of 24” aways from all waterways and will not obstruct the proper roof drainage.
   5. Examine surfaces for defects, rough spots, ridges, depressions, foreign material, moisture, and unevenness.
   6. Do not proceed until defects are corrected.
   7. Do not apply insulation until substrate is sufficiently dry.
   8. Broom clean substrate immediately prior to application.
   9. Use additional insulation to fill depressions and low spots that would otherwise cause ponding water.
   10. Verify that temporary roof has been completed (IF REQUIRED)

3.3 INSTALLATION

A. Comply with built-up roofing manufacturer's written instructions, as submitted and reviewed by Architect during the submittal process, for installing roof insulation.

B. (Wood Roof Decks Only) Install one lapped rosin sheet course and mechanically fasten to substrate according to built-up roofing manufacturer's written instructions and as called for in these specifications and on the drawings.

C. Insulation Cant Strips: Install and secure preformed 45-degree insulation cant strips at junctures of built-up roofing with vertical surfaces or angle changes greater than 45 degrees.

D. Install tapered insulation under area of roofing to conform to slopes indicated. Install insulation with long joints of insulation in a continuous straight line with end joints staggered between rows, abutting edges and ends between boards. Fill gaps exceeding 1/4 inch with insulation.

1. Cut and fit insulation within 1/4 inch of nailers, projections, and penetrations.

E. Install insulation under area of roofing to achieve required thickness. Where overall insulation thickness is 2.7 inches or greater, install two or more layers with joints of each succeeding layer staggered from joints of previous layer a minimum of 6 inches in each direction.

F. Trim surface of insulation where necessary at roof drains so completed surface is flush and does not restrict flow of water.

G. Mechanically Fastened and Adhered Insulation: Install first layer of insulation to deck using mechanical fasteners specifically designed and sized for fastening specified board-type roof insulation to deck type.

1. Fasten first layer of insulation to resist uplift pressure at corners, perimeter, and field of the roof.

a. Field: 16 screws per 4 foot by 8 foot panel (2 square feet per screw).
b. Perimeter: 24 screws per 4 foot by 8 foot panel (1.33 square feet per screw).
c. Corners: 32 screws per 4 foot by 8 foot panel (1 square foot per screw).

2. Set each subsequent layer of insulation in insulation adhesive adhered per the roofing system manufactures recommendations.

H. Install cover boards over insulation with long joints in continuous straight lines with end joints staggered between rows. Offset joints of insulation below a minimum of 6 inches in each direction. Loosely butt cover boards together and

adhere in place per manufacturers instructions. Tape joints if required by the roofing manufacturer.

I. Apply insulation adhesive to underside and immediately bond cover board to substrate.

J. Approved base layer of insulation board shall be fully attached to the deck with an approved mechanical fastening system, (all subsequent layers are to be adhered). As a minimum, the amount of fasteners shall be in accordance with manufacturer's recommendation ASCE 7-16.

K. Filler pieces of insulation require at least two fasteners per piece if size of insulation is less than four square feet.

L. Spacing pattern of fasteners shall be as per manufacturer's recommendations to meet the ASCE 7-16 requirements. Placement of any fastener from edge of insulation board shall be a minimum of three inches, and a maximum of six (6) inches.

M. Minimum penetration into deck shall be as recommended by the fastener manufacturer. There is a one (1) inch minimum for metal, wood and structural concrete decks where not specified by the manufacturer. For gypsum and cement-wood fiber decks, penetration shall be determined from pull-out test results with a minimum penetration of one and one-half (1 ½) inches.

N. Gypsum and cementitious wood fiber decks: Where the roof deck is visible from the building interior, the contractor shall ensure no penetration of fasteners through underside of the deck. Any holes or spalling caused by fastener installation shall be repaired by the roofing contractor. Where the new roof system thickness exceeds an amount so that a minimum of 1 ½ of penetration cannot be achieved with an Olympic TB Fastener, or approved equivalent, then (and only then) toggle bolts may be used to secure installation to the deck.

O. Tape joints of insulation as per manufacturer's requirements.

P. Attachment with Insulation Adhesive Approved by Factory Mutual (FM).

Q. Ensure all surfaces are clean, dry, free of dirt, debris, oils, loose ore embedded gravel, unadhered coatings, deteriorated membrane and other contaminants that may inhibit adhesion.

R. Apply insulation adhesive directly to the substrate using a ribbon pattern with one quarter to one half (1/4-1/2) inch wide beads 12 inches o.c., using either the manual applicator or an automatic applicator, at a rate of one (1) gallon per one hundred (150) square feet per cartridge.

S. Immediately place insulation boards into wet adhesive. Do not slide boards into place. Do not allow the adhesive to skin over before installing insulation boards.

T. Briefly step each board into place to ensure contact with the adhesive. Substrates with irregular surfaces may prevent the insulation board from making positive contact with the adhesive. Relief cuts or temporary weights may be required to ensure proper contact.

U. All boards shall be cut and fitted where the roof deck intersects a vertical surface. The boards shall be cut to fit a minimum of one quarter (1/4) inch away from the vertical surface.

V. Tape joints of insulation as per manufacturer's requirements.

3.4 CLEANING

A. Remove debris and cartons from roof deck. Leave insulation clean and dry, ready to receive roofing membrane.

5. CONSTRUCTION WASTE MANAGEMENT

A. Remove and properly dispose of waste products generated during installation. Comply with requirements of authorities having jurisdiction.

END OF SECTION

SECTION 07550
MODIFIED BITUMINOUS MEMBRANE ROOFING

1.GENERAL

1.1. SECTION INCLUDES

A. Includes all labor, materials, and equipment to install a modified bitumen roof system over the properly prepared substrate.

B. Includes removal and disposal of existing roofing system(s), insulation board, gutters, flashings, sheet metal items, copings, etc. for a complete prepared roof surface to receive the new roofing system.

C. Includes a new cold applied 2-ply asphalt roofing system with all accessories as needed for a complete warrantable roofing system.

D. See section 011100 Summary of Work for a detailed scope of work.

1.2. RELATED SECTIONS

A. Section 01110 – Summary of Work

B. Section 016400 - Owner Supplied Materials

C. Section 06100 - Rough Carpentry

D. Section 07220 - Insulation Board

E. Section 07620 - Roofing Related Sheet Metal

1.3. REFERENCES

A. ASTM D 41 - Standard Specification for Asphalt Primer Used in Roofing, Dampproofing, and Waterproofing.

B. ASTM D 312 - Standard Specification for Asphalt used in Roofing.

C. ASTM D 451 - Standard Test Method for Sieve Analysis of Granular Mineral Surfacing for Asphalt Roofing Products.

D. ASTM D 1970 - Specification for Sheet Materials, Self-Adhering Polymer Modified Bituminous, Used as Steep Roofing Underlayment for Ice Dam Protection.

E. ASTM D 1079 Standard Terminology Relating to Roofing, Waterproofing and Bituminous Materials.

F. ASTM D 1227 Standard Specification for Emulsified Asphalt Used as a Protective Coating for Roofing.

G. ASTM D 1863 Standard Specification for Mineral Aggregate Used as a Protective Coating for Roofing.

H. ASTM D 2178 Standard Specification for Asphalt Glass Felt Used in Roofing and Waterproofing.

I. ASTM D 2822 Standard Specification for Asphalt Roof Cement.

J. ASTM D 2824 Standard Specification for Aluminum-Pigmented Asphalt Roof Coating.

K. ASTM D 4601 Standard Specification for Asphalt Coated Glass Fiber Base Sheet Used in Roofing.

L. ASTM D 5147 Standard Test Method for Sampling and Testing Modified Bituminous Sheet Materials.

M. ASTM D 6162 Standard Specification for Styrene Butadiene Styrene (SBS) Modified Bituminous Sheet Materials Using a Combination of Polyester and Glass Fiber Reinforcements.

N. ASTM D 6163 Standard Specification for Styrene Butadiene Styrene (SBS) Modified Bituminous Sheet Materials Using Glass Fiber Reinforcements.

O. ASTM D 6164 - Standard Specification for Styrene Butadiene Styrene (SBS) Modified Bituminous Sheet Materials Using Polyester Reinforcements.

P. ASTM E 108 - Standard Test Methods for Fire Test of Roof Coverings

Q. Factory Mutual Research (FM): Roof Assembly Classifications.

R. National Roofing Contractors Association (NRCA): Roofing and Waterproofing Manual.

S. Sheet Metal and Air Conditioning Contractors National Association, Inc. (SMACNA) - Architectural Sheet Metal Manual.

T. Underwriters Laboratories, Inc. (UL): Fire Hazard Classifications.

U. Warnock Hersey (WH): Fire Hazard Classifications.

V. ANSI-SPRI ES-1 Wind Design Standard for Edge Systems used with Low Slope Roofing Systems.

W. ASCE 7, Minimum Design Loads for Buildings and Other Structures

X. UL - Fire Resistance Directory.

Y. FM Approvals - Roof Coverings and/or RoofNav assembly database.

Z. California Title 24 Energy Efficient Standards.

1.4. DESIGN / PERFORMANCE REQUIREMENTS

A. Perform work in accordance with all federal, state and local codes.

B. Exterior Fire Test Exposure: Roof system shall achieve a UL, FM or WH Class rating for roof slopes indicated on the Drawings as follows:
   1. Factory Mutual Class A Rating.

2. Underwriters Laboratory Class A Rating.
3. Warnock Hersey Class A Rating.

C. Design Requirements:
1. Uniform Wind Uplift Load Capacity
   a. Installed roof system shall withstand negative (uplift) design wind loading pressures complying with the following criteria.
      1. Design Code: ASCE 7, Method 2 for Components and Cladding.
      2. Importance Category:
         a. III.
      3. Importance Factor of:
         a. 1.0
      4. Wind Speed: 115 mph
      5. Ultimate Pullout Value: 364 pounds per each of the fastener
      6. Exposure Category:
         a. C
      7. Design Roof Height: 20 feet.
      8. Minimum Building Width: 40 feet.
      9. Roof Pitch: 0.5 :12.
      10. Roof Area Design Uplift Pressure:
         a. Zone 1 - Field of roof 14.3 psf
         b. Zone 2 - Eaves, ridges, hips and rakes 24 psf
         c. Zone 3 - Corners 36 psf
2. Snow Load: N/A psf.
3. Live Load: 20 psf, or not to exceed original building design.
4. Dead Load:
   a. Installation of new roofing materials shall not exceed the dead load capacity of the existing roof structure.

D. Energy Star: Roof System shall comply with the initial and aged reflectivity required by the U.S. Federal Government's Energy Star program.

E. LEED: Roof system shall meet the reflectivity and emissivity criteria to qualify for one point under the LEED credit category, Credit 7.2, Landscape & Exterior Design to Reduce Heat Island - Roof.

F. Roof System membranes containing recycled or bio-based materials shall be third party certified through UL Environment.

G. Roof system shall have been tested in compliance with the following codes and test requirements:
1. Miami-Dade County:
   a. Self-Adhered Membrane Systems Over:
      1. Wood Decks N.O.A.
   b. Torch and Mop Membrane Systems Over
      1. Wood Decks N.O.A.
   c. Roofing Underlayments
      1. Garland Underlayments N.O.A.
   d. Roofing Cements and Coatings
      1. Garland Coatings and Mastics N.O.A.
2. Cool Roof Rating Council:

a. CRRC Directory CRRC 077-0028
3. International Code Council Evaluation Service (ICC-ES):
   a. Membrane Systems
      1. ESR-3460
4. Underwriters Laboratories:
   a. Certification TGFU.R8384
5. Warnock Hersey
   a. ITS Directory of Listed Products
6. FM Approvals:
   a. RoofNav Website

1.5. SUBMITTALS

A. Submit under provisions of Section 01300.

B. Product Data: Manufacturer's data sheets on each product to be used, including:
   1. Preparation instructions and recommendations.
   2. Storage and handling requirements and recommendations.
   3. Installation instructions.

C. Shop Drawings: Submit shop drawings including installation details of roofing, flashing, fastening, insulation and vapor barrier, including notation of roof slopes and fastening patterns of insulation and base modified bitumen membrane, prior to job start.

D. Design Pressure Calculations: Submit design pressure calculations for the roof area in accordance with ASCE 7 and local Building Code requirements. Include a roof system attachment analysis report, certifying the system's compliance with applicable wind load requirements before Work begins. Report shall be reviewed by a Professional Engineer registered in the State of the Project who has provided roof system attachment analysis for not less than 5 consecutive years.

E. LEED Submittals: Provide documentation of how the requirements of Credit will be met:
   1. List of proposed materials with recycled content. Indicate post-consumer recycled content and pre-consumer recycled content for each product having recycled content.
   2. Product data and certification letter indicating percentages by weight of post-consumer and pre-consumer recycled content for products having recycled content.
   3. Product reflectivity and emissivity criteria to qualify for one point under the LEED credit category, Credit 7.2, Landscape & Exterior Design to Reduce Heat Island - Roof.

F. Recycled or Bio-Based Materials: Provide third party certification through UL Environment of roof System membranes containing recycled or bio based materials

G. Verification Samples: For each modified bituminous membrane ply product specified, two samples, minimum size 6 inches (150 mm) square, representing actual product, color, and patterns.

H. Provide written certification from the roofing system manufacturer certifying the applicator is currently authorized to install the specified roof system and ability to provide the specified warranty.

I. Sample Warranty: Provide an unexecuted copy of the warranty specified for this project

clearly stating the terms required of the owner, contractor, and manufacturer.

J. Manufacturer's Certificates: Provide to certify products meet or exceed specified requirements.

K. Test Reports: Submit test reports, prepared by an independent testing agency, for all modified bituminous sheet roofing, indicating compliance with ASTM D5147.

L. Manufacturer's Fire Compliance Certificate: Certify that the roof system furnished is approved by Factory Mutual (FM), Underwriters Laboratories (UL), Warnock Hersey (WH) or approved third party testing facility in accordance with ASTM E108, Class A for external fire and meets local or nationally recognized building codes.

M. Closeout Submittals: Provide manufacturer's maintenance instructions that include recommendations for periodic inspection and maintenance of all completed roofing work. Provide product warranty executed by the manufacturer. Assist Owner in preparation and submittal of roof installation acceptance certification as may be necessary in connection with fire and extended coverage insurance on roofing and associated work.

1.6. QUALITY ASSURANCE

A. Perform Work in accordance with NRCA Roofing and Waterproofing Manual.

B. Manufacturer Qualifications: Company specializing in manufacturing products specified with documented ISO 9001 certification and minimum of twelve years of documented experience and must not have been in Chapter 11 bankruptcy during the last five years.

C. Installer Qualifications: Company specializing in performing Work of this section with minimum five years documented experience and a certified Pre-Approved Garland Contractor.

D. Installer's Field Supervision: Maintain a full-time Supervisor/Foreman on job site during all phases of roofing work while roofing work is in progress.

E. Product Certification: Provide manufacturer's certification that materials are manufactured in the United States and conform to requirements specified herein, are chemically and physically compatible with each other, and are suitable for inclusion within the total roof system specified herein.

F. Source Limitations: Obtain all components of roof system from a single manufacturer. Secondary products that are required shall be recommended and approved in writing by the roofing system Manufacturer. Upon request of the Architect or Owner, submit Manufacturer's written approval of secondary components in list form, signed by an authorized agent of the Manufacturer.

1.7. PRE-INSTALLATION MEETINGS

A. Convene minimum two weeks prior to commencing Work of this section.

B. Review installation procedures and coordination required with related Work.

C. Inspect and make notes of job conditions prior to installation:
   1. Record minutes of the conference and provide copies to all parties present.

2. Identify all outstanding issues in writing designating the responsible party for follow-up action and the timetable for completion.
3. Installation of roofing system shall not begin until all outstanding issues are resolved to the satisfaction of the Owner and Architect.

1.8. DELIVERY, STORAGE, AND HANDLING

A. Deliver and store products in manufacturer's unopened packaging with labels intact until ready for installation.

B. Store all roofing materials in a dry place, on pallets or raised platforms, out of direct exposure to the elements until time of application. Store materials at least 4 inches above ground level and covered with "breathable" tarpaulins.

C. Stored in accordance with the instructions of the manufacturer prior to their application or installation. Store roll goods on end on a clean flat surface except store KEE-Stone FB 60 rolls flat on a clean flat surface. No wet or damaged materials will be used in the application.

D. Store at room temperature wherever possible, until immediately prior to installing the roll. During winter, store materials in a heated location with a 50 degree F (10 degree C) minimum temperature, removed only as needed for immediate use. Keep materials away from open flame or welding sparks.

E. Avoid stockpiling of materials on roofs without first obtaining acceptance from the Architect/Engineer.

F. Adhesive storage shall be between the range of above 50 degree F (10 degree C) and below 80 degree F (27 degree C). Area of storage shall be constructed for flammable storage.

1.9. COORDINATION

A. Coordinate Work with installing associated metal flashings as work of this section proceeds.

1.10. PROJECT CONDITIONS

A. Maintain environmental conditions (temperature, humidity, and ventilation) within limits recommended by manufacturer for optimum results. Do not install products under environmental conditions outside manufacturer's absolute limits.

1.11. WARRANTY

A. Special Warranty: Manufacturer's No Dollar Limit Warranty, Manufacturer agrees to repair or replace components of roofing system that fail in materials or workmanship within specified warranty period.
1. Special warranty includes membrane roofing, base flashing, roof insulation, fasteners, cover boards, substrate boards, vapor retarders (where included).
2. Warranty Period: 30 years from date of Substantial Completion.
3. Must cover calculated wind speed.

B. Special Project Warranty: Submit roofing Installer's warranty, on warranty form at end of this Section, signed by Installer, covering the Work of this Section, including all components of roofing system such as membrane roofing, base flashing, roof insulation, fasteners, cover

boards, substrate boards, vapor retarders (where included) , and walkway products, for the following warranty period:

1. Correct defective Work within a five (5) year period after Date of Substantial Completion.

2.PRODUCTS

2.1. MANUFACTURERS

A. Acceptable Manufacturer: The Garland Company, Inc.; 3800 E. 91st St., Cleveland, OH 44105. Local Representative: Richard Jones Phone: (559) 647-1196. rjones@garlandco.com Web Site: www.garlandco.com.

B. Requests for substitutions will not be considered for this project.

C. The Products specified are intended and the Standard of Quality for the products required for this project. If other products are proposed the bidder must disclose in the bid the manufacturer and the products that they intend to use on the Project. If no manufacturer and products are listed, the bid may be accepted only with the use of products specified.

1. Bidder will not be allowed to change materials after the bid opening date.
2. If alternate products are included in the bid, the products must be submitted a minimum of seven (7) days prior to the bid date for review and be equal to or exceed the products specified. Supporting technical data shall be submitted to the Architect/ Owner for approval prior to acceptance.
3. In making a request for substitution, the Bidder/Roofing Contractor represents that it has:
   a. Personally investigated the proposed product or method, and determined that it is equal or superior in all respects to that specified.
   b. Will provide the same guarantee for substitution as for the product and method specified.
   c. Will coordinate installation of accepted substitution in work, making such changes as may be required for work to be completed in all respects.
   d. Will waive all claims for additional cost related to substitution, which consequently become apparent.
   e. Cost data is complete and includes all related cost under his/her contract or other contracts, which may be affected by the substitution.
   f. Will reimburse the Owner for all redesign cost by the Architect for accommodation of the substitution.
4. Architect/ Owner reserves the right to be the final authority on the acceptance or rejection of any or all bids, proposed alternate roofing systems or materials that has met ALL specified requirement criteria.
5. Failure to submit substitution package, or any portion thereof requested, will result in immediate disqualification and consideration for that particular contractors request for manufacturer substitution.

2.2. COLD APPLIED 2-PLY ROOF SYSTEM

A. HPR Base Sheet: One ply of mechanically attached to the prepared substrate.

1. HPR Base Sheet:

B. Insulation: As specified in Section 07220 or at minimum;

1. One layer of 2” Polyiso Board insulation board to be installed with mechanical fasteners per ASCE 7.
2. One layer of primed ½” woodfiber insulation board is to be installed with insulation adhesive per ASCE 7.

C. Base (Ply) Sheet: One ply bonded to the prepared substrate with Interply Adhesive:
1. FlexBase 80:

D. Modified Cap Sheet: One ply bonded to the prepared substrate with Interply Adhesive:
1. StressPly Plus FR Mineral:

E. Interply Adhesive:
1. Weatherking Plus WC:

F. Flashing Base (Ply): One ply bonded to the prepared substrate with Interply Adhesive:
1. FlexBase 80:

G. Flashing Cap Sheet: One ply bonded to the prepared substrate with Interply Adhesive:
1. StressPly Plus FR Mineral:

H. Flashing Ply Adhesive:
1. Flashing Bond Mastic / WeatherKing Plus Flashing Adhesive

I. Surfacing:
1. Pyramic Plus Lo Acrylic Coating

2.3. ACCESSORIES:

A. Roof Insulation Base Layer(s): Provide roof insulation as specified in accordance with Section 07220.

B. Roof Insulation Top Layer: Provide one layer of ½” Primed High Density Fiberboard Roof Insulation. ASTM C 208, Type II.

C. Vapor Retarder: HPR Base Sheet; Install layer base sheet shingled uniformly to achieve one ply over the entire prepared substrate. Shingle in direction of slope of roof to shed water on each area of roof.
1. HPR Base Sheet by The Garland Company
a. Size – 300 square feet p/roll

D. Nails and Fasteners: Non-ferrous metal or galvanized steel, except that hard copper nails shall be used with copper; aluminum or stainless steel nails shall be used with aluminum; and stainless steel nails shall be used with stainless steel, Fasteners shall be self-clinching type of penetrating type as recommended by the deck manufacturer. Fasten nails and fasteners flush-driven through flat metal discs not less than 1 inch (25 mm) diameter. Omit metal discs when one-piece composite nails or fasteners with heads not less than 1 inch (25 mm) diameter are used.

E. Walkway Pads - As recommended and furnished by the membrane manufacturer set in approved adhesive to control foot traffic on roof top surface and provide a durable system compliant non-slip walkway.
1. TrafGuard Walk Pads by Wise Products Group
a. ½” x 3’ x 4’

b. Install walk way pads in a path from all roof access points to and around all HVAC and serviceable mechanical equipment, to and around roof hatches, and as designated by the owner.

F. Urethane Sealant Hybrid - Tuff-Stuff MS: One part, non-sag sealant as approved and furnished by the membrane manufacturer for moving joints.
1. Tensile Strength, ASTM D 412: 250 psi
2. Elongation, ASTM D 412: 450%
3. Hardness, Shore A ASTM C 920: 35
4. Adhesion-in-Peel, ASTM C 92: 30 pli

G. Sealant - Green-Lock Structural Adhesive: Single component, 100% solids structural adhesive as furnished and recommended by the membrane manufacturer.
1. Elongation, ASTM D 412: 300%
2. Hardness, Shore A, ASTM C 920: 50
3. Shear Strength, ASTM D 1002: 300 psi

H. Butyl Tape: 100% solids, asbestos free and compressive tape designed to seal as recommended and furnished by the membrane manufacturer.

I. Glass Fiber Cant - Glass Cant: Continuous triangular cross Section made of inorganic fibrous glass used as a cant strip as recommended and furnished by the membrane manufacturer.

2.4. EDGE TREATMENT AND ROOF PENETRATION FLASHINGS

A. Pre-Manufactured Edge Metal Finishes:
1. Exposed and unexposed surfaces for mill finish flashing, fascia, and coping cap, as shipped from the mill
2. Exposed surfaces for coated panels:
a. Steel Finishes: fluorocarbon finish. Epoxy primer baked both sides, .2-.25 mils thickness as approved by finish coat manufacturer.
Weathering finish as referred by National Coil Coaters Association (NCCA). Provided with the following properties.
1. Pencil Hardness: ASTM D3363, HB-H / NCCA II-2.
2. Bend: ASTM D-4145, O-T / NCCA II-19
3. Cross-Hatch Adhesion: ASTM D3359, no loss of adhesion
4. Gloss (60 deg. angle): ASTM D523, 25+/-5%
5. Reverse Bend: ASTM D2794, no cracking or loss of adhesion
6. Nominal Thickness: ASTM D1005
a. Primer: 0.2 mils
b. Topcoat, 0.7 mils min
c. Clear Coat (optional, only used with 22 ga. steel) 0.3 mils
7. Color: Provide as specified. (Subject to minimum quantities)

B. Flashing Boot - Rubbertite Flashing Boot: Neoprene pipe boot for sealing single or multiple pipe penetrations adhered in approved adhesives as recommended and furnished by the membrane manufacturer.

C. Vents and Breathers: Heavy gauge aluminum and fully insulated vent that allows moisture and air to escape but not enter the roof system as recommended and furnished by the membrane manufacturer.

D. Pitch pans, Rain Collar 24 gauge stainless or 20oz (567gram) copper. All joints should be welded/soldered watertight. See details for design.

E. Drain Flashings should be 4lb (1.8kg) sheet lead formed and rolled.

F. Plumbing stacks should be 4lb (1.8kg) sheet lead. All plumbing stacks are to have the factory lead caps (counter flashing) installed. Caulking and banding will not be acceptable on open top pipe penetrations. On field fabricated flashings where a lead cap can't be applied a lead umbrella flashing is to be installed, flared out, caulking and banding will be required with the specified sealant.

G. Liquid Flashing - Tuff-Flash: An asphaltic-polyurethane, low odor, liquid flashing material designed for specialized details unable to be waterproofed with typical modified membrane flashings.
   1. Tensile Strength, ASTM D 412: 400 psi
   2. Elongation, ASTM D 412: 300%
   3. Density @77 deg. F 8.5 lb/gal typical

H. Fabricated Flashings: Fabricated flashings and trim are specified in Section 07620.
   1. Fabricated flashings and trim shall conform to the detail requirements of SMACNA "Architectural Sheet Metal Manual" and/or the CDA Copper Development Association "Copper in Architecture - Handbook" as applicable.

I. Manufactured Roof Specialties: Shop fabricated copings, fascia, gravel stops, control joints, expansion joints, joint covers and related flashings and trim are specified in Section 07.
   1. Manufactured roof specialties shall conform to the detail requirements of SMACNA "Architectural Sheet Metal Manual" and/or the NRCA "Roofing and Waterproofing Manual" as applicable.

3.EXECUTION

3.1. EXAMINATION

A. Do not begin installation until substrates have been properly prepared.

B. Inspect and approve the deck condition, slopes and fastener backing if applicable, parapet walls, expansion joints, roof drains, stack vents, vent outlets, nailers and surfaces and elements.

C. Verify that work penetrating the roof deck, or which may otherwise affect the roofing, has been properly completed.

D. If substrate preparation and other conditions are the responsibility of another installer, notify Architect of unsatisfactory preparation before proceeding.

3.2. PREPARATION

A. General: Clean surfaces thoroughly prior to installation.
   1. Prepare surfaces using the methods recommended by the manufacturer for achieving the best result for the substrate under the project conditions.
   2. Fill substrate surface voids that are greater than 1/4 inch wide with an acceptable fill material.

3. Roof surface to receive roofing system shall be smooth, clean, free from loose gravel, dirt and debris, dry and structurally sound.
4. Wherever necessary, all surfaces to receive roofing materials shall be power broom and vacuumed to remove debris and loose matter prior to starting work.
5. Do not apply roofing during inclement weather. Do not apply roofing membrane to damp, frozen, dirty, or dusty surfaces.
6. Fasteners and plates for fastening components mechanically to the substrate shall provide a minimum pull-out capacity of 300 lbs. (136 k) per fastener. Base or ply sheets attached with cap nails require a minimum pullout capacity of 40 lb. per nail.
7. Prime decks where required, in accordance with requirements and recommendations of the primer and deck manufacturer.

B. Wood Deck:
1. Dimensional wood deck shall be minimum 1 inch (25 mm) thick, knotholes and cracks larger than 1/4 inch shall be covered with sheet metal. All boards shall be appropriately nailed and have adequate end bearing to the centers of beams/rafters. Lumber shall be kiln dried.
2. Plywood shall be a minimum 15/32 inch (11.9 mm) thick and conform to the standards and installation requirements of the American Plywood Association (APA).
3. If no roof insulation is specified, provide a suitable dry sheathing paper, followed by an approved base sheet nailed appropriately for the specified roof system, with 1 inch (25 mm) diameter caps and annular nails unless otherwise required by the applicable Code or Approval agency.
4. Insulation is to be mechanically attached in accordance with the insulation manufacturer's recommendations unless otherwise required by the applicable Code.
5. In all retrofit roof applications, it is required that deck be inspected for defects. Any defects are to be corrected per the deck manufacturer's recommendations and standards of the APA/Engineered Wood Association prior to new roof application.
6. Light metal wall ties or other structural metal exposed on top of the wood deck shall be covered with one ply of a heavy roofing sheet, such as HPR Glasbase Base Sheet, extending 2 inches to 6 inches (51 mm to 152 mm) beyond the metal in all directions. Nail in place before applying the base ply.

3.3. INSTALLATION - GENERAL

A. Install modified bitumen membranes and flashings in accordance with manufacturer's instructions and with the recommendations provided by the National Roofing Contractors Association's Roofing & Waterproofing Manual, the Asphalt Roofing Manufacturers Association, and applicable codes.

B. General: Avoid installation of modified bitumen membranes at temperatures lower than 40-45 degrees F. When work at such temperatures unavoidable use the following precautions:
1. Take extra care during cold weather installation and when ambient temperatures are affected by wind or humidity, to ensure adequate bonding is achieved between the surfaces to be joined. Use extra care at material seam welds and where adhesion of the applied product to the appropriately prepared substrate as the substrate can be affected by such temperature constraints as well.
2. Unrolling of cold materials, under low ambient conditions must be avoided to prevent the likelihood of unnecessary stress cracking. Rolls must be at least 40

degrees F at the time of application. If the membrane roll becomes stiff or difficult to install, it must be replaced with roll from a heated storage area.

C. Commence installation of the roofing system at the lowest point of the roof (or roof area), working up the slope toward the highest point. Lap sheets shingle fashion so as to constantly shed water

D. All slopes greater than 2:12 require back-nailing to prevent slippage of the ply sheets. Use ring or spiral-shank 1 inch cap nails, or screws and plates at a rate of 1 fastener per ply (including the membrane) at each insulation stop. Place insulation stops at 16 ft o.c. for slopes less than 3:12 and 4 feet o.c. for slopes greater than 3:12. On non-insulated systems, nail each ply directly into the deck at the rate specified above. When slope exceeds 2:12, install all plies parallel to the slope (strapping) to facilitate backnailing. Install 4 additional fasteners at the upper edge of the membrane when strapping the plies.

3.4. INSTALLATION COLD APPLIED ROOF SYSTEM

A. Base Ply: Cut base ply sheets into 18 foot lengths and allow plies to relax before installing. Install base sheet in Interply Adhesive: applied at the rate required by the manufacturer. Shingle base sheets uniformly to achieve one ply throughout over the prepared substrate. Shingle in proper direction to shed water on each large area of roofing.
   1. Lap ply sheet ends 8 inches. Stagger end laps 12 inches minimum.
   2. Solidly bond to the substrate and adjacent ply with specified cold adhesive at the rate of 2 to 2-1/2 gallons per 100 square feet.
   3. Roll must push a puddle of adhesive in front of it with adhesive slightly visible at all side laps. Use care to eliminate air entrapment under the membrane.
   4. Install subsequent rolls of modified across the roof as above with a minimum of 4 inch side laps and 8 inch staggered end laps. Lay modified membrane in the same direction as the underlayers but the laps shall not coincide with the laps of the base layers.
   5. Extend plies 2 inches beyond top edges of cants at wall and projection bases.
   6. Install base flashing ply to all perimeter and projection details.
   7. Allow the one ply of base sheet to cure at least 30 minutes before installing the modified membrane. However, the modified membrane must be installed the same day as the base plies.

B. Modified Cap Ply(s): Cut cap ply sheets into 18 foot lengths and allow plies to relax before installing. Install in interplay adhesive applied at the rate required by the manufacturer. Shingle sheets uniformly over the prepared substrate to achieve the number of plys specified. Shingle in proper direction to shed water on each large area of roofing.
   1. Lap ply sheet ends 8 inches. Stagger end laps 12 inches minimum.
   2. Solidly bond to the base layers with specified cold adhesive at the rate of 2 to 2-1/2 gallons per 100 square feet.
   3. Roll must push a puddle of adhesive in front of it with adhesive slightly visible at all side laps. Care should be taken to eliminate air entrapment under the membrane.
   4. Install subsequent rolls of modified across the roof as above with a minimum of 4 inch side laps and 8 inch staggered end laps. Lay modified membrane in the same direction as the underlayers but the laps shall not coincide with the laps of the base layers.
   5. Allow cold adhesive to set for 5 to 10 minutes before installing the top layer of modified membrane.

6. Extend membrane 2 inches beyond top edge of all cants in full moppings of the cold adhesive as shown on the Drawings.

C. Fibrous Cant Strips: Provide non-combustible perlite or glass fiber cant strips at all wall/curb detail treatments where angle changes are greater than 45 degrees. Cant may be set in approved cold adhesives, hot asphalt or mechanically attached with approved plates and fasteners.

D. Wood Blocking, Nailers and Cant Strips: Provide wood blocking, nailers and cant strips as specified in Section 06114.
   1. Provide nailers at all roof perimeters and penetrations for fastening membrane flashings and sheet metal components.
   2. Wood nailers should match the height of any insulation, providing a smooth and even transition between flashing and insulation areas.
   3. Nailer lengths should be spaced with a minimum 1/8 inch gap for expansion and contraction between each length or change of direction.
   4. Nailers and flashings should be fastened in accordance with Factory Mutual "Loss Prevention Data Sheet 1- 49, Perimeter Flashing" and be designed to be capable of resisting a minimum force of 200 lbs/lineal foot in any direction.

E. Metal Work: Provide metal flashings, counter flashings, parapet coping caps and thru-wall flashings as specified in Section 07620 or Section 07710. Install in accordance with the SMACNA "Architectural Sheet Metal Manual" or the NRCA Roofing Waterproofing manual.

F. Termination Bar: Provide a metal termination bar or approved top edge securement at the terminus of all flashing sheets at walls and curbs. Fasten the bar a minimum of 8 inches (203 mm) o/c to achieve constant compression. Provide suitable, sealant at the top edge if required.

G. Flashing Base Ply: Install flashing sheets by the same application method used for the base ply.
   1. Seal curb, wall and parapet flashings with an application of mastic and mesh on a daily basis. Do not permit conditions to exist that will allow moisture to enter behind, around or under the roof or flashing membrane.
   2. Prepare all walls, penetrations, expansion joints and where shown on the Drawings to be flashed with required primer at the rate of 100 square feet per gallon. Allow primer to dry tack free.
   3. Adhere to the underlying base ply with specified flashing ply adhesive unless otherwise specified. Nail off at a minimum of 8 inches (203 mm) o.c. from the finished roof at all vertical surfaces.
   4. Solidly adhere the entire flashing ply to the substrate. Secure the tops of all flashings that are not run up and over curb through termination bar fastened at 6 inches (152 mm) O.C. and sealed at top.
   5. Coordinate counter flashing, cap flashings, expansion joints and similar work with modified bitumen roofing work as specified.
   6. Coordinate roof accessories, miscellaneous sheet metal accessory items, including piping vents and other devices with the roofing system work.
   7. Secure the top edge of the flashing sheet using a termination bar only when the wall surface above is waterproofed, or nailed 4 inches on center and covered with an acceptable counter flashing.

H. Flashing Cap Ply:
1. Seal curb, wall and parapet flashings with an application of mastic and mesh on a daily basis. Do not permit conditions to exist that will allow moisture to enter behind, around or under the roof or flashing membrane.
2. Prepare all walls, penetrations, expansion joints and where shown on the Drawings to be flashed with required primer at the rate of 100 square feet per gallon. Allow primer to dry tack free.
3. Adhere to the underlying base flashing ply with specified flashing ply adhesive unless otherwise specified. Nail off at a minimum of 8 inches (203 mm) o.c. from the finished roof at all vertical surfaces.
4. Coordinate counter flashing, cap flashings, expansion joints and similar work with modified bitumen roofing work as specified.
5. Coordinate roof accessories, miscellaneous sheet metal accessory items with the roofing system work.
6. All stripping shall be installed prior to flashing cap sheet installation.
7. Heat and scrape granules when welding or adhering at cut areas and seams to granular surfaces at all flashings.
8. Secure the top edge of the flashing sheet using a termination bar only when the wall surface above is waterproofed, or nailed 4 inches on center and covered with an acceptable counter flashing.
9. Seal all vertical laps of flashing ply with a three-course application of trowel-grade mastic and fiberglass mesh and apply white roofing granules.

I. Roof Walkways: Provide walkways in areas indicated on the Drawings or at a minimum;
a. Install walk way pads in a path from all roof access points to and around all HVAC and serviceable mechanical equipment, to and around roof hatches, and as designated by the owner.

3.5. INSTALLATION OF SURFACING

A. Prior to installation of surface coating, obtain approval from manufacturer as to work completed. On average, at least 30 days are required prior to final surfacing.
1. Reflective Coating:
a. Allow all cold applied mastics and coating to properly dry and cure before coating application.
b. Paint all exposed roofing with manufacturer's base coat acrylic coating installed at a rate of one (1.5) gallons per square, back roll entire installation required.
c. Paint all exposed roofing with manufacturer's Energy Star top coat acrylic coating installed at a rate of one (1.5) gallons per square, complete coverage for a clean neat appearance is required. Additional coats may be required to achieve complete coverage and proper mil thickness.

3.6. INSTALLATION EDGE TREATMENT AND ROOF PENETRATION FLASHING

A. Fabricated Flashings: Fabricated flashings and trim are provided as specified in Section 07620.
1. Fabricated flashings and trim shall conform to the detail requirements of SMACNA "Architectural Sheet Metal Manual" and/or the Copper Development Association "Copper in Architecture - Handbook" as applicable.

B. Metal Edge:
   1. Inspect the nailers to assure proper attachment and configuration.
   2. Run one ply over the edge. Assure coverage of all wood nailers. Fasten plies with ring shank nails at 8 inches (203 mm) o.c.
   3. Install continuous cleat and fasten at 6 inches (152 mm) o.c.
   4. Install new metal edge hooked to continuous cleat and set in bed of roof cement. Fasten flange to wood nailers every 3 inches (76 mm) o.c. staggered.
   5. Prime metal edge at a rate of 100 square feet per gallon and allow to dry.
   6. Strip in flange with base flashing ply covering entire flange in bitumen with 6 inches (152 mm) on to the field of roof. Assure ply laps do not coincide with metal laps.
   7. Install a second ply of modified flashing ply in bitumen over the base flashing ply, 9 inches (228 mm) on to the field of the roof. Seal outside edge with rubberized cement.

C. Roof Edge With Gutter:
   1. Inspect the nailer to assure proper attachment and configuration. Increase slope at metal edge by additional degree of slope in first board.
   2. Run one ply over the edge. Assure coverage of all wood nailers. Fasten plies with ring shank nails at 8 inches (203 mm) o.c.
   3. Install gutter and strapping.
   4. Install continuous cleat and fasten at 6 inches (152 mm) o.c.
   5. Install new metal edge hooked to continuous cleat and set in bed of roof cement. Fasten flange to wood nailer every 3 inches (76 mm) o.c. staggered.
   6. Prime metal edge at a rate of 100 square feet per gallon and allow to dry.
   7. Strip in flange with base flashing ply covering entire flange in bitumen with 6 inches (152 mm) onto the field of the roof. Assure ply laps do not coincide with metal laps.
   8. Install a second ply of modified flashing ply in bitumen over the base flashing ply, 9 inches (228 mm) on to the field of the roof.

D. Scupper Through Wall (Overflow):
   1. Inspect the nailer to assure proper attachment and configuration.
   2. Run one ply over nailer up the overflow, into the scupper hole and up flashing as in typical wall flashing detail. Assure coverage of all wood nailers.
   3. Install scupper box in a 1/4 inch (6 mm) bed of mastic. Assure all box seams are soldered and have a minimum 4 inch (101 mm) flange. Make sure all corners are closed and soldered. Prime scupper at a rate of 100 square feet per gallon and allow to dry.
   4. Fasten flange of scupper box every 3 inches (76 mm) o.c. staggered.
   5. Strip in flange scupper box with base flashing ply covering entire area with 6 inch (152 mm) overlap on to the field of the roof and wall flashing.
   6. Install a second ply of modified flashing ply in bitumen over the base flashing ply, 9 inches (228 mm) on to the field of the roof. Apply a three-course application of mastic and mesh at all seams.

E. Coping Cap:
   1. Minimum flashing height is 8 inches (203 mm) above finished roof height. Maximum flashing height is 24 inches (609 mm). Prime vertical wall at a rate of 100 square feet per gallon and allow to dry.
   2. Set cant in bitumen. Run all field plies over cant a minimum of 2 inches (50 mm).
   3. Attach tapered board to top of wall.

4. Install base flashing ply covering entire wall and wrapped over top of wall and down face with 6 inches (152 mm) on to field of roof and set in cold asphalt. Nail membrane at 8 inches (203 mm) o.c.
5. Install a second ply of modified flashing ply in bitumen over the base flashing ply, 9 inches (228 mm) on to the field of the roof. Apply a three-course application of mastic and mesh at all seams and install white roofing granules in fresh mastic.
6. Install continuous cleat and fasten at 6 inches (152 mm) o.c. to outside wall.
7. Install new metal coping cap hooked to continuous cleat.
8. Fasten inside cap 24 inches (609 mm) o.c. with approved fasteners and neoprene washers through slotted holes, which allow for expansion and contraction.

F. Surface Mounted Counterflashing:
1. Minimum flashing height is 8 inches (203 mm) above finished roof height. Maximum flashing height is 24 inches (609 mm). Prime vertical wall at a rate of 100 square feet per gallon and allow to dry.
2. Set cant in bitumen. Run all field plies over cant a minimum of 2 inches (50 mm).
3. Install base flashing ply covering wall set in bitumen with 6 inches (152 mm) on to field of the roof.
4. Install a second ply of modified flashing ply in bitumen over the base flashing ply, 9 inches (228 mm) on to the field of the roof. Apply a three-course application of mastic and mesh at all vertical seams and install white roofing granules in fresh mastic.
5. Apply butyl tape to wall behind flashing. Secure termination bar through flashing, butyl tape and into wall. Alternatively use caulk to replace the butyl tape.
6. Secure counterflashing set on butyl tape above flashing at 8 inches (203 mm) o.c. and caulk top of counterflashing.

G. Equipment Support:
1. Minimum curb height is 8 inches (203 mm) above finished roof height. Prime vertical at a rate of 100 square feet per gallon and allow to dry.
2. Set cant in bitumen. Run all field plies over cant a minimum of 2 inches (50 mm).
3. Install base flashing ply covering curb set in bitumen with 6 inches (152 mm) on to field of the roof.
4. Install a second ply of modified flashing ply in bitumen over the base flashing ply, 9 inches (228 mm) on to the field of the roof. Attach top of membrane to top of curb and nail at 8 inches (203 mm) o.c. Apply a three-course application of mastic and mesh at all vertical seams and install white roofing granules in fresh roofing mastic.
5. Install pre-manufactured cover. Fasten sides at 24 inches (609 mm) o.c. with fasteners and neoprene washers. Furnish all joint cover laps with butyl tape between metal covers.
6. Set equipment on neoprene pad and fasten as required by equipment manufacturer.

H. Curb Detail/Air Handling Station:
1. Minimum curb height is 8 inches (203 mm) above finished roof height. Prime vertical at a rate of 100 square feet per gallon and allow to dry.
2. Set cant in bitumen. Run all field plies over cant a minimum of 2 inches (50 mm).
3. Install base flashing ply covering curb set in bitumen with 6 inches (152 mm) on to field of the roof.
4. Install a second ply of modified flashing ply in bitumen over the base flashing ply, 9 inches (228 mm) on to the field of the roof. Apply a three-course application of

mastic and mesh at all vertical seams and install white roofing granules into fresh mastic.

5. Install pre-manufactured counterflashing with fasteners and neoprene washers or per manufacturer's recommendations.
6. Set equipment on neoprene pad and fasten as required by equipment manufacturer.

I. Skylight:
1. Minimum curb height is 8 inches (203 mm) above finished roof height. Prime vertical at a rate of 100 square feet per gallon and allow to dry.
2. Set cant in bitumen. Run all field plies over cant a minimum of 2 inches (50 mm).
3. Install base flashing ply covering curb set in bitumen with 6 inches (152 mm) on to field of the roof.
4. Install a second ply of modified flashing ply in bitumen over the base flashing ply, 9 inches (228 mm) on to the field of the roof. Attach top of membrane to top of wood nailer and apply a three-course application of mastic and mesh. Allow to cure and install white roofing granules in fresh mastic.
5. Install pre-manufactured lens and fasten flashing sides at 8 inches (203 mm) o.c. with fasteners and neoprene washers.

J. Exhaust Fan:
1. Minimum curb height is 8 inches (203 mm) above finished roof height. Prime vertical at a rate of 100 square feet per gallon and allow to dry.
2. Set cant in bitumen. Run all plies over cant a minimum of 2 inches (50 mm).
3. Install base flashing ply covering curb with 6 inches (152 mm) on to field of the roof.
4. Install a second ply of modified flashing ply installed over the base flashing ply, 9 inches (228 mm) on to field of the roof. Attach top of membrane to top of wood curb and nail at 8 inches (203 mm) o.c. Apply a three-course application of mastic and mesh at all vertical seams and install white roofing granules into fresh mastic.
5. Install metal exhaust fan over the wood nailers and flashing to act as counterflashing. Fasten per manufacturer's recommendation.

K. Roof Drain:
1. Plug drain to prevent debris from entering plumbing.
2. Taper insulation to drain minimum of 24 inches (609 mm) from center of drain.
3. Install two base flashing plies (40 inch square minimum) in bitumen.
4. Set lead/copper flashing (30 inch square minimum) in 1/4 inch (6 mm) bed of mastic. Run lead/copper into drain a minimum of 2 inches (50 mm). Prime lead/copper at a rate of 100 square feet per gallon and allow to dry.
5. Run roof system plies over drain. Cut out plies inside drain bowl.
6. Install modified membrane (48 inch square minimum) in bitumen.
7. Install clamping ring and assure that all plies are under the clamping ring.
8. Remove drain plug and install strainer.

L. Plumbing Stack:
1. Minimum stack height is 12 inches (609 mm).
2. Run roof system over the entire surface of the roof. Seal the base of the stack with elastomeric sealant.
3. Set lead/copper flashing in 1/4 inch (6 mm) bed of mastic.
4. Prime flange of new sleeve. Install properly sized sleeves set in 1/4 inch (6 mm) bed of roof cement.

5. Install base flashing ply in bitumen.
6. Install membrane in bitumen.
7. Caulk the intersection of the membrane with elastomeric sealant.
8. Install factory lead cap (counter flashing) proper size and fit must be installed at all pipe penetrations.

M. Heat Stack:
1. Minimum stack height is 12 inches (609 mm).
2. Run roof system over the entire surface of the roof. Seal the base of the stack with elastomeric sealant.
3. Prime flange of new sleeve. Install properly sized sleeves set in 1/4 inch (6 mm) bed of roof cement.
4. Install base flashing ply in bitumen.
5. Install modified membrane in bitumen.
6. Caulk the intersection of the membrane with elastomeric sealant.
7. Install new collar over cape. Weld collar or install stainless steel draw brand.

3.7. CLEANING

A. Clean-up and remove daily from the site all wrappings, empty containers, paper, loose particles and other debris resulting from these operations.

B. Remove asphalt markings from finished surfaces.

C. Repair or replace defaced or disfigured finishes caused by Work of this section.

3.8. PROTECTION

A. Provide traffic ways, erect barriers, fences, guards, rails, enclosures, chutes and the like to protect personnel, roofs and structures, vehicles and utilities.

B. Protect exposed surfaces of finished walls with tarps to prevent damage.

C. Plywood for traffic ways required for material movement over existing roofs shall be not less than 5/8 inch (16 mm) thick.

D. In addition to the plywood listed above, an underlayment of minimum 1/2 inch (13 mm) recover board is required on new roofing.

E. Special permission shall be obtained from the Manufacturer before any traffic shall be permitted over new roofing.

3.9. FIELD QUALITY CONTROL

A. Inspection: Provide manufacturer's field observations at start-up and two (2) days per week through project completion. Provide a final inspection upon completion of the Work.
1. Warranty shall be issued upon manufacturer's acceptance of the installation.
2. Field observations shall be performed by a representative employed full-time by the manufacturer and whose primary job description is to assist, inspect and approve membrane installations for the manufacturer.
3. Provide observation reports from the representative indicating procedures followed, weather conditions and any discrepancies found during inspection.
4. Provide a final report from the representative, certifying that the roofing system has

been satisfactorily installed according to the project specifications, approved details and good general roofing practice.

3.10. SCHEDULES

A. Base (Ply) Sheet: Flexbase 80 Base Sheet (80 mil): 80 mil SBS (Styrene-Butadiene-Styrene) rubber modified roofing membrane reinforced with a fiberglass scrim, performance requirements according to ASTM D 6163.
   a. Tensile Strength, ASTM D 5147
      1. 2 in/min. @ 73.4 +/- 3.6 deg. F MD 200 lbf/in XD 200 lbf/in
      2. 50mm/min. @ 23 +/- 2 deg. C MD 8.75 kN/m XD 8.75 kN/m
   b. Tear Strength, ASTM D 5147
      1. 2 in/min. @ 73.4 +/- 3.6 deg. F MD 310 lbf XD 300 lbf
      2. 50mm/min. @ 23 +/- 2 deg. C MD 444.8 N XD 444.8 N
   c. Elongation at Maximum Tensile, ASTM D 5147
      1. 2 in/min. @ 73.4 +/- 3.6 deg. F MD 4.0 % XD 4.0 %
      2. 50mm/min@ 23 +/- 2 deg. C MD 4.0 % XD 4.0 %
   d. Low Temperature Flexibility, ASTM D 5147, Passes -30 deg. F (-28.8 deg. C)

B. Modified Cap (Ply) Sheet:
   1. StressPly Plus FR Mineral: 155 mil SBS (Styrene-Butadiene-Styrene) mineral surfaced, rubber modified roofing membrane reinforced with a fiberglass and polyester composite scrim. ASTM D 6162, Type III Grade G
      a. Tensile Strength, ASTM D 5147
         1. 2 in/min. @ 73.4 +/- 3.6 deg. F MD 310 lbf/in XD 310 lbf/in
         2. 50 mm/min. @ 23 +/- 2 deg. C MD 54.25 kN/m XD 54.25 kN/m
      b. Tear Strength, ASTM D 5147
         1. 2 in/min. @ 73.4 +/- 3.6 deg. F MD 500 lbf XD 500 lbf
         2. 50 mm/min. @ 23 +/- 2 deg. C MD 2224 N XD 2224 N
      c. Elongation at Maximum Tensile, ASTM D 5147
         1. 2 in/min. @ 73.4 +/- 3.6 deg. F MD 8% XD 8%
         2. 50 mm/min. @ 23 +/- 2 deg. C MD 8% XD 8%
      d. Low Temperature Flexibility, ASTM D 5147, Passes -30 deg. F (-34 deg. C)

C. Interply Adhesive:
   1. Weatherking Plus WC: Rubberized, polymer modified cold process asphalt roofing bitumen V.O.C. compliant ASTM D 3019. Performance Requirements:
      a. Non-Volatile Content ASTM D 4479 78%
      b. Density ASTM D1475 9.0 lbs./gal.
      c. Viscosity Stormer ASTM D562 900-1100 grams
      d. Flash Point ASTM D 93 100 deg. F min. (37 deg. C)
      e. Slope: up to 2:12
      f. V.O.C. ASTM D 3960 Less than 250 g/l
      g. Flash Point ASTM D 93 105 deg. F
      h. Slope maximum 1:12

D. Base (Ply) Sheet: Flexbase 80 Base Sheet (80 mil): 80 mil SBS (Styrene-Butadiene-Styrene) rubber modified roofing membrane reinforced with a fiberglass scrim, performance requirements according to ASTM D 6163.
   a. Tensile Strength, ASTM D 5147
      1. 2 in/min. @ 73.4 +/- 3.6 deg. F MD 200 lbf/in XD 200 lbf/in

2. 50mm/min. @ 23 +/- 2 deg. C MD 8.75 kN/m XD 8.75 kN/m

b. Tear Strength, ASTM D 5147
1. 2 in/min. @ 73.4 +/- 3.6 deg. F MD 310 lbf XD 300 lbf
2. 50mm/min. @ 23 +/- 2 deg. C MD 444.8 N XD 444.8 N

c. Elongation at Maximum Tensile, ASTM D 5147
1. 2 in/min. @ 73.4 +/- 3.6 deg. F MD 4.0 % XD 4.0 %
2. 50mm/min@ 23 +/- 2 deg. C MD 4.0 % XD 4.0 %

d. Low Temperature Flexibility, ASTM D 5147, Passes -30 deg. F (-28.8 deg. C)

E. Flashing Ply Adhesive:
1. Flashing Bond: Asphalt roofing mastic V.O.C. compliant, ASTM D 2822, Type II trowel grade flashing adhesive.
a. Non-Volatile Content ASTM D 4479 70 min.
b. Density ASTM D 1475 8.3 lbs./gal. (1kg/l)
c. Flash Point ASTM D 93 103 deg. F (39 deg. C)

F. Surfacing:
1. Flashing Cap (Ply) Sheet:
a. StressPly Plus FR Mineral: 155 mil SBS (Styrene-Butadiene-Styrene) mineral surfaced, rubber modified roofing membrane reinforced with a fiberglass and polyester composite scrim. ASTM D 6162, Type III Grade G
1. Tensile Strength, ASTM D 5147
a. 2 in/min. @ 73.4 +/- 3.6 deg. F MD 310 lbf/in XD 310 lbf/in
b. 50 mm/min. @ 23 +/- 2 deg. C MD 54.25 kN/m XD 54.25 kN/m
2. Tear Strength, ASTM D 5147
a. 2 in/min. @ 73.4 +/- 3.6 deg. F MD 500 lbf XD 500 lbf
b. 50 mm/min. @ 23 +/- 2 deg. C MD 2224 N XD 2224 N
3. Elongation at Maximum Tensile, ASTM D 5147
a. 2 in/min. @ 73.4 +/- 3.6 deg. F MD 8% XD 8%
b. 50 mm/min. @ 23 +/- 2 deg. C MD 8% XD 8%
4. Low Temperature Flexibility, ASTM D 5147, Passes -30 deg. F (-34 deg. C)

G. Coating:
1. White Elastomeric Roof Coating:
a. Pyramic Plus Acrylic Roof Coating: White, Non Toxic, Fire Retardant Roof Coating.
1. Non Volatile 63%
2. Density 11.7lb. / gal
3. VOC <50 gal./l
4. Reflectance 0.83
5. Emittance 0.90
6. SRI 104

3.11 ROOFING INSTALLER'S WARRANTY

A. WHEREAS _____ of _____, herein called the "Roofing Installer," has performed roofing and associated work ("work") on the following project:
   1. Owner: _____.
   2. Address: _____.
   3. Building Name/Type: _____.
   4. Address: _____.
   5. Area of Work: _____.
   6. Acceptance Date: _____.
   7. Warranty Period: **Five Years**.
   8. Expiration Date: _____.

B. AND WHEREAS Roofing Installer has contracted (either directly with Owner or indirectly as a subcontractor) to warrant said work against leaks and faulty or defective materials and workmanship for designated Warranty Period,

C. NOW THEREFORE Roofing Installer hereby warrants, subject to terms and conditions herein set forth, that during Warranty Period he will, at his own cost and expense, make or cause to be made such repairs to or replacements of said work as are necessary to correct faulty and defective work and as are necessary to maintain said work in a watertight condition.

D. This Warranty is made subject to the following terms and conditions:
   1. Specifically excluded from this Warranty are damages to work and other parts of the building, and to building contents, caused by:
      a. lightning;
      b. peak gust wind speed exceeding **120 MPH**;
      c. fire;
      d. failure of roofing system substrate, including cracking, settlement, excessive deflection, deterioration, and decomposition;
      e. faulty construction of parapet walls, copings, chimneys, skylights, vents, equipment supports, and other edge conditions and penetrations of the work;
      f. vapor condensation on bottom of roofing; and
      g. activity on roofing by others, including construction contractors, maintenance personnel, other persons, and animals, whether authorized or unauthorized by Owner.
   2. When work has been damaged by any of foregoing causes, Warranty shall be null and void until such damage has been repaired by Roofing Installer and until cost and expense thereof have been paid by Owner or by another responsible party so designated.
   3. Roofing Installer is responsible for damage to work covered by this Warranty but is not liable for consequential damages to building or building contents resulting from leaks or faults or defects of work.
   4. During Warranty Period, if Owner allows alteration of work by anyone other than Roofing Installer, including cutting, patching, and maintenance in connection with penetrations, attachment of other work, and positioning of anything on roof, this Warranty shall become null and void on date of said alterations, but only to the extent said alterations affect work covered by this Warranty. If Owner engages Roofing Installer to perform said alterations, Warranty shall not become null and void unless Roofing

Installer, before starting said work, shall have notified Owner in writing, showing reasonable cause for claim, that said alterations would likely damage or deteriorate work, thereby reasonably justifying a limitation or termination of this Warranty.

5. During Warranty Period, if original use of roof is changed and it becomes used for, but was not originally specified for, a promenade, work deck, spray-cooled surface, flooded basin, or other use or service more severe than originally specified, this Warranty shall become null and void on date of said change, but only to the extent said change affects work covered by this Warranty.
6. Owner shall promptly notify Roofing Installer of observed, known, or suspected leaks, defects, or deterioration and shall afford reasonable opportunity for Roofing Installer to inspect work and to examine evidence of such leaks, defects, or deterioration.
7. This Warranty is recognized to be the only warranty of Roofing Installer on said work and shall not operate to restrict or cut off Owner from other remedies and resources lawfully available to Owner in cases of roofing failure. Specifically, this Warranty shall not operate to relieve Roofing Installer of responsibility for performance of original work according to requirements of the Contract Documents, regardless of whether Contract was a contract directly with Owner or a subcontract with Owner's General Contractor.

E. IN WITNESS THEREOF, this instrument has been duly executed this _____ day of _____, _____.

1. Authorized Signature: _____.
2. Name: _____.
3. Title: _____.

END OF SECTION

SECTION 07 62 00

SHEET METAL FLASHING AND TRIM

1.GENERAL

1. RELATED DOCUMENTS

A. Drawings and general provisions of the Contract, including General and Supplementary Conditions and Division 01 Specification Sections, apply to this Section.

2. SUMMARY

A. Section Includes:

1. Manufactured through-wall flashing with counterflashing
2. Formed low-slope roof sheet metal fabrications.
3. Formed wall, coping, and soffit sheet metal fabrications.
4. Formed equipment support flashing
5. Surface mounted counter flashing
6. Manufactured reglets and counter flashing
7. Edge metal / gravel stop and cleat flashing
8. Gutters & Downspouts

B. Related Requirements:

1. Division 06 "Rough Carpentry" for wood nailers, curbs, and blocking.
2. Division 07 “Membrane Roofing” for materials and installation of sheet metal flashing and trim integral with roofing.
3. Division 07 “Metal Roofing” for materials and installation of sheet metal flashing and trim integral with roofing.
4. Division 07 "Roof Accessories" for set-on-type curbs, equipment supports, roof hatches, vents, and other manufactured roof accessory units.

3. COORDINATION

A. Coordinate sheet metal flashing and trim layout and seams with sizes and locations of penetrations to be flashed, and joints and seams in adjacent materials.

B. Coordinate sheet metal flashing and trim installation with adjoining roofing and wall materials, joints, and seams to provide leak proof, secure, and noncorrosive installation.

4. PREINSTALLATION MEETINGS

A. Pre Installation Conference: Conduct conference at Project site.

1. Review construction schedule. Verify availability of materials, Installer's personnel, equipment, and facilities needed to make progress and avoid delays.
2. Review special roof details, roof drainage, roof-penetration flashing, equipment curbs, and condition of other construction that affect sheet metal flashing and trim.
3. Review requirements for insurance and certificates if applicable.
4. Review sheet metal flashing observation and repair procedures after flashing installation.

5. SUBMITTALS

A. Product Data: For each type of product.

1. Include construction details, material descriptions, dimensions of individual components and profiles, and finishes for each manufactured product and accessory.

B. Shop Drawings: For sheet metal flashing and trim.

1. Include plans, elevations, sections, and attachment details.
2. Detail fabrication and installation layouts, expansion-joint locations, and keyed details. Distinguish between shop- and field-assembled work.
3. Include identification of material, thickness, weight, and finish for each item and location in Project.
4. Include details for forming, including profiles, shapes, seams, and dimensions.
5. Include details for joining, supporting, and securing, including layout and spacing of fasteners, cleats, clips, and other attachments. Include pattern of seams.
6. Include details of termination points and assemblies.
7. Include details of expansion joints and expansion-joint covers, including showing direction of expansion and contraction from fixed points.
8. Include details of roof-penetration flashing.
9. Include details of edge conditions, including eaves, ridges, valleys, rakes, crickets, and counter flashings as applicable.
10. Include details of special conditions.
11. Include details of connections to adjoining work.
12. Detail formed flashing and trim at scale of not less than 3 inches per 12 inches

C. Samples for Initial Selection: For each type of sheet metal and accessory indicated with factory-applied finishes.

D. Samples for Verification: For each type of exposed finish.

1. Sheet Metal Flashing: 12 inches (300 mm) long by actual width of unit, including finished seam and in required profile. Include fasteners, cleats, clips, closures, and other attachments.

2. Trim, Metal Closures, Expansion Joints, Joint Intersections, and Miscellaneous Fabrications: 12 inches (300 mm) long and in required profile. Include fasteners and other exposed accessories.

6. INFORMATIONAL SUBMITTALS

A. Qualification Data: For fabricator.

B. Product Certificates: For each type of coping and roof edge flashing that is ANSI SPRI ES-1 tested.

C. Product Test Reports: For each product, for tests performed by a qualified testing agency.

D. Sample Warranty: For special warranty.

7. CLOSEOUT SUBMITTALS

A. Maintenance Data: For sheet metal flashing and trim, and its accessories, to include in maintenance manuals.

8. QUALITY ASSURANCE

A. Fabricator Qualifications: Employs skilled workers who custom fabricate sheet metal flashing and trim similar to that required for this Project and whose products have a record of successful in-service performance.

1. For copings and roof edge flashings that are SPRI ES-1 tested**,** shop shall be listed as able to fabricate required details as tested and approved.

9. DELIVERY, STORAGE, AND HANDLING

A. Do not store sheet metal flashing and trim materials in contact with other materials that might cause staining, denting, or other surface damage. Store sheet metal flashing and trim materials away from uncured concrete and masonry.

B. Protect strippable protective covering on sheet metal flashing and trim from exposure to sunlight and high humidity, except to extent necessary for period of sheet metal flashing and trim installation.

10. WARRANTY

A. Owner shall receive one (1) 30 Year No Dollar Limit warranty from manufacturer of roofing materials covering all of the following criteria. Multiple warranties are not acceptable.

1. Pre-finished metal material shall require a written twenty (20)-year non-prorated warranty covering fade, chalking and film integrity. The material shall not show a color change greater than 5 NBS color units per ASTM D2244 or chalking excess of 8 units per ASTM D659. If either occurs material shall be replaced per warranty, at no cost to the Owner.

2. Changes: Changes or alterations in the edge metal system without prior written consent from the manufacturer shall render the system unacceptable for a warranty.

3. Warranty shall commence on date of substantial completion or final payment, whichever is agreed by contract.

4. The Contractor shall provide the Owner with a notarized written warranty assuring that all sheet metal work including caulking and fasteners to be watertight and secure for a period of two years from the date of final acceptance of the building. Warranty shall include all materials and workmanship required to repair any leaks that develop, and make good any damage to other work or equipment caused by such leaks or the repairs thereof.

5. Installing roofing contractor shall be responsible for the installation of the edge metal system in general accordance with the membrane manufacturer's recommendations.

6. Installing contractor shall certify that the edge metal system has been installed per the manufacturer's printed details and specifications.

7. One manufacturer shall provide a 30 Year No Dollar Limit Warranty as a single warranty for all accessory metal for flashings, metal edges and copings, along with the warranty for metal roof areas, membrane roof areas, and any transitions between two different material types.

2.PRODUCTS

1. PERFORMANCE REQUIREMENTS

A. General: Sheet metal flashing and trim assemblies shall withstand wind loads, structural movement, thermally induced movement, and exposure to weather without failure due to defective manufacture, fabrication, installation, or other defects in construction. Completed sheet metal flashing and trim shall not rattle, leak, or loosen, and shall remain watertight.

B. Sheet Metal Standard for Flashing and Trim: Comply with NRCA's "The NRCA Roofing Manual" and SMACNA's "Architectural Sheet Metal Manual" requirements for dimensions and profiles shown unless more stringent requirements are indicated.

C. Sheet Metal Standard for Copper: Comply with CDA's "Copper in Architecture Handbook." Conform to dimensions and profiles shown unless more stringent requirements are indicated.

D. SPRI Wind Design Standard: Manufacture and install roof edge flashings tested according to SPRI ES-1 and capable of resisting the following design pressure:

1. Design Pressure: As indicated on Drawings**.**

E. Thermal Movements: Allow for thermal movements from ambient and surface temperature changes to prevent buckling, opening of joints, overstressing of components, failure of joint sealants, failure of connections, and other detrimental effects. Base calculations on surface temperatures of materials due to both solar heat gain and nighttime-sky heat loss.

1. Temperature Change: 120 deg F (67 deg C)**,** ambient; 180 deg F (100 deg C)**,** material surfaces**.**

2. COPING

A. The design is based upon roofing systems engineered and manufactured by the Garland Company:

The Garland Company, Inc.
Rich Jones
Telephone: 559-647-1196
Email: rjones@garlandco.com

1. General: Product designations for the materials used in this section shall be based on performance characteristics of the R-MER Edge System manufactured by the Garland Company, Cleveland, OH, and shall form the basis of the contract documents.

2. R-Mer Edge Fascia or Extruded Fascia Continuous Cant

a. Zinc-coated steel, ASTM A653, coating designation G-90, in thickness of 0.0299 nom./ 22 gauge, 36" to 48" by coil length, chemically treated, commercial or lock-forming quality.

3. R-Mer Edge Coping Chairs

a. Zinc-coated steel, ASTM A653, coating designation G-90, in thickness of 0.0635 nom./ 16 gauge, 36" to 48" by coil length, chemically treated, commercial or lock-forming quality.

4. R-Mer Edge Fascia/drip edge

a. Zinc-coated steel, ASTM A653, coating designation G-90, in thickness of 22 gauge, 36" to 48" by coil length, chemically treated, commercial or lock-forming quality.

5. R-Mer Edge Coping

a. Zinc-coated steel, ASTM A653, coating designation G-90, in thickness of 22 gauge 36" to 48" by coil length, chemically treated, commercial or lock-forming quality.

3. SHEET METALS

A. General: Protect mechanical and other finishes on exposed surfaces from damage by applying strippable, temporary protective film before shipping.

B. Metallic-Coated Steel Sheet: Provide zinc-coated (galvanized) steel sheet according to ASTM A 653/A 653M, G90 (Z275) coating designation; prepainted by coil-coating process to comply with ASTM A 755/A 755M.

1. Surface: Smooth, flat and with manufacturer's standard clear acrylic coating on both sides**.**
2. Exposed Coil-Coated Finish:
   a. Two-Coat Fluoropolymer: AAMA 621. Fluoropolymer finish containing not less than 70 percent PVDF resin by weight in both color coat and clear topcoat. Prepare, pretreat, and apply coating to exposed metal surfaces to comply with coating and resin manufacturers' written instructions.
3. Color: Match Architect's sample
4. Concealed Finish: Pretreat with manufacturer's standard white or light-colored acrylic or polyester backer finish, consisting of prime coat and wash coat with minimum total dry film thickness of 0.5 mil (0.013 mm).

4. UNDERLAYMENT MATERIALS

A. Self-Adhering, High-Temperature Sheet: Minimum 45 mils thick, consisting of a slip-resistant polyethylene- or polypropylene-film top surface laminated to a layer of butyl- or SBS-modified asphalt adhesive, with release-paper backing; specifically designed to withstand high metal temperatures beneath metal roofing. Provide primer according to written recommendations of underlayment manufacturer.

1. The Garland Company Inc., 3800 E. 91st Street Cleveland OH 44105; R-Mer Seal self-adhering underlayment. Local Representative: Richard Jones (559) 647-1196 rjones@garlandco.com
2. Thermal Stability: ASTM D 1970; stable after testing at 240 deg F or higher.
3. Low-Temperature Flexibility: ASTM D 1970; passes after testing at minus 20 deg F or lower.

B. Slip Sheet: Rosin-sized building paper, 3 lb/100 sq. ft. minimum.

5. MISCELLANEOUS MATERIALS

A. General: Provide materials and types of fasteners, solder, protective coatings, sealants, and other miscellaneous items as required for complete sheet metal flashing and trim installation and as recommended by manufacturer of primary sheet metal unless otherwise indicated.

B. Fasteners: Wood screws, annular threaded nails, self-tapping screws, self-locking rivets and bolts, and other suitable fasteners designed to withstand design loads and recommended by manufacturer of primary sheet metal or manufactured item.

1. General: Blind fasteners or self-drilling screws, gasketed, with hex-washer head.

a. Exposed Fasteners: Heads matching color of sheet metal using plastic caps or factory-applied coating. Provide metal-backed EPDM or PVC sealing washers under heads of exposed fasteners bearing on weather side of metal.
b. Blind Fasteners: High-strength aluminum or stainless-steel rivets suitable for metal being fastened.
c. Spikes and Ferrules: Same material as gutter; with spike with ferrule matching internal gutter width.

2. Fasteners for Zinc-Tin Alloy-Coated Stainless-Steel Sheet: Series 300 stainless steel.

C. Solder:

1. For Zinc-Coated (Galvanized) Steel: ASTM B 32, Grade Sn50, 50 percent tin and 50 percent lead or Grade Sn60, 60 percent tin and 40 percent lead with maximum lead content of 0.2 percent.

D. Sealant Tape: Pressure-sensitive, 100 percent solids, polyisobutylene compound sealant tape with release-paper backing. Provide permanently elastic, nonsag, nontoxic, nonstaining tape 1/2 inch wide and 1/8 inch thick.

E. Elastomeric Sealant: ASTM C 920, elastomeric polyurethane polymer sealant; of type, grade, class, and use classifications required to seal joints in sheet metal flashing and trim and remain watertight.

F. Butyl Sealant: ASTM C 1311, single-component, solvent-release butyl rubber sealant; polyisobutylene plasticized; heavy bodied for hooked-type expansion joints with limited movement.

G. Bituminous Coating: Cold-applied asphalt emulsion according to ASTM D 1187.

H. Asphalt Roofing Cement: ASTM D 4586, asbestos free, of consistency required for application.

6. FABRICATION, GENERAL

A. General: Custom fabricate sheet metal flashing and trim to comply with details shown and recommendations in cited sheet metal standard that apply to design, dimensions, geometry, metal thickness, and other characteristics of item required. Fabricate sheet metal flashing and trim in shop to greatest extent possible.

1. Fabricate sheet metal flashing and trim in thickness or weight needed to comply with performance requirements, but not less than that specified for each application and metal.
2. Obtain field measurements for accurate fit before shop fabrication.
3. Form sheet metal flashing and trim to fit substrates without excessive oil canning, buckling, and tool marks; true to line, levels, and slopes; and with exposed edges folded back to form hems.
4. Conceal fasteners and expansion provisions where possible. Do not use exposed fasteners on faces exposed to view.

B. Fabrication Tolerances: Fabricate sheet metal flashing and trim that is capable of installation to a tolerance of 1/4 inch in 20 feet on slope and location lines indicated on Drawings and within 1/8-inch offset of adjoining faces and of alignment of matching profiles.

C. Expansion Provisions: Form metal for thermal expansion of exposed flashing and trim.

1. Form expansion joints of intermeshing hooked flanges, not less than 1 inch deep, filled with butyl sealant concealed within joints.
2. Use lapped expansion joints only where indicated on Drawings.

D. Sealant Joints: Where movable, non expansion-type joints are required, form metal to provide for proper installation of elastomeric sealant according to cited sheet metal standard.

E. Fabricate cleats and attachment devices from same material as accessory being anchored or from compatible, noncorrosive metal.

F. Seams: Fabricate nonmoving seams with flat-lock seams. Form seams and seal with elastomeric sealant unless otherwise recommended by sealant manufacturer for intended use.

G. Do not use graphite pencils to mark metal surfaces.

7. ROOF-DRAINAGE SHEET METAL FABRICATIONS

A. Hanging Gutters: Fabricate to cross section required, complete with end pieces, outlet tubes, and other accessories as required. Fabricate in minimum 96-inch- long sections. Furnish flat-stock gutter brackets and flat-stock gutter spacers and straps fabricated from same metal as gutters, of size recommended by cited sheet metal standard but with thickness not less than dimension indicated on Drawings. Fabricate expansion

joints, expansion-joint covers, gutter bead reinforcing bars, and gutter accessories from same metal as gutters. Shop fabricate interior and exterior corners.

1. Gutter Profile: Style B according to cited sheet metal standard.
2. Expansion Joints: Butt type with cover plate**.**
3. Accessories: Continuous, removable leaf screen with sheet metal frame and hardware cloth screen**.**
4. Gutters with Girth up to 15 Inches: Fabricate from the following materials:
   a. Galvanized Steel: 22 gauge thickness.

B. Downspouts: Fabricate downspouts per plans and details or per size per CA plumbing code. Fabricate from the following materials unless otherwise shown on drawings.
   1. Galvanized Steel: 22 gauge thickness.

C. Conductor Heads: Fabricate conductor heads with flanged back and stiffened top edge and of dimensions and shape required, complete with outlet tubes, exterior flange trim, and built-in overflows. Fabricate from the following materials:

   1. Galvanized Steel: 22 gauge thickness.

8. WALL SHEET METAL FABRICATIONS

A. Through-Wall Flashing: Fabricate continuous flashings in minimum 96-inch- long, but not exceeding 12-foot long, sections, under copings, and at shelf angles. Fabricate discontinuous lintel, sill, and similar flashings to extend 6 inches beyond each side of wall openings; and form with 2-inch high, end dams. Fabricate from the following materials:

   1. Galvanized Steel: 22 gauge thickness.

B. Opening Flashings in Frame Construction: Fabricate head, sill, jamb, and similar flashings to extend **4 inches** beyond wall openings. Form head and sill flashing with 2-inch high, end dams. Fabricate from the following materials:

   1. Galvanized Steel: 22 gauge thickness.

C. Wall Expansion-Joint Cover: Fabricate from the following materials:

   1. Galvanized Steel: 22 gauge thickness.

9. MISCELLANEOUS SHEET METAL FABRICATIONS

A. Equipment Support Flashing: Fabricate from the following materials:

   1. Galvanized Steel: 22 gauge thickness.

B. Overhead-Piping Safety Pans: Fabricate from the following materials:

1. Galvanized Steel: 22 gauge thickness.

3.EXECUTION

1. EXAMINATION

A. Examine substrates, areas, and conditions, with Installer present, for compliance with requirements for installation tolerances, substrate, and other conditions affecting performance of the Work.

1. Verify compliance with requirements for installation tolerances of substrates.
2. Verify that substrate is sound, dry, smooth, clean, sloped for drainage, and securely anchored.
3. Verify that air- or water-resistant barriers have been installed over sheathing or backing substrate to prevent air infiltration or water penetration.

B. Proceed with installation only after unsatisfactory conditions have been corrected.

2. UNDERLAYMENT INSTALLATION

A. Self-Adhering Sheet Underlayment: Install self-adhering sheet underlayment, wrinkle free. Prime substrate if recommended by underlayment manufacturer. Comply with temperature restrictions of underlayment manufacturer for installation; use primer for installing underlayment at low temperatures. Apply in shingle fashion to shed water, with end laps of not less than 6 inches staggered 24 inches between courses. Overlap side edges not less than 3-1/2 inches. Roll laps and edges with roller. Cover underlayment within 14 days.

B. Apply slip sheet, wrinkle free, directly on substrate before installing sheet metal flashing and trim.

3. INSTALLATION, GENERAL

A. General: Anchor sheet metal flashing and trim and other components of the Work securely in place, with provisions for thermal and structural movement. Use fasteners, solder, protective coatings, separators, sealants, and other miscellaneous items as required to complete sheet metal flashing and trim system.

1. Install sheet metal flashing and trim true to line, levels, and slopes. Provide uniform, neat seams with minimum exposure of solder, welds, and sealant.
2. Install sheet metal flashing and trim to fit substrates and to result in watertight performance. Verify shapes and dimensions of surfaces to be covered before fabricating sheet metal.
3. Space cleats not more than 12 inches apart. Attach each cleat with at least two fasteners. Bend tabs over fasteners.

4. Install exposed sheet metal flashing and trim with limited oil canning, and free of buckling and tool marks.
5. Torch cutting of sheet metal flashing and trim is not permitted.
6. Do not use graphite pencils to mark metal surfaces.

B. Metal Protection: Where dissimilar metals contact each other, or where metal contacts pressure-treated wood or other corrosive substrates, protect against galvanic action or corrosion by painting contact surfaces with bituminous coating or by other permanent separation as recommended by sheet metal manufacturer or cited sheet metal standard.

1. Coat concealed side of stainless-steel sheet metal flashing and trim with bituminous coating where flashing and trim contact wood, ferrous metal, or cementitious construction.
2. Underlayment: Where installing sheet metal flashing and trim directly on cementitious or wood substrates, install underlayment and cover with slip sheet.

C. Expansion Provisions: Provide for thermal expansion of exposed flashing and trim. Space movement joints at maximum of **10 feet** with no joints within 24 inches of corner or intersection.

1. Form expansion joints of intermeshing hooked flanges, not less than 1 inch deep, filled with sealant concealed within joints.
2. Use lapped expansion joints only where indicated on Drawings.

D. Fasteners: Use fastener sizes that penetrate wood blocking or sheathing not less than 1-1/4 inches for nails and not less than 3/4 inch for wood screws.

E. Conceal fasteners and expansion provisions where possible in exposed work and locate to minimize possibility of leakage. Cover and seal fasteners and anchors as required for a tight installation.

F. Seal joints as required for watertight construction.

1. Use sealant-filled joints unless otherwise indicated. Embed hooked flanges of joint members not less than 1 inch into sealant. Form joints to completely conceal sealant. When ambient temperature at time of installation is between 40 and 70 deg F, set joint members for 50 percent movement each way. Adjust setting proportionately for installation at higher ambient temperatures. Do not install sealant-type joints at temperatures below 40 deg F.
2. Prepare joints and apply sealants to comply with requirements in Section 079200 "Joint Sealants."

G. Soldered Joints: Clean surfaces to be soldered, removing oils and foreign matter. Pre-tin edges of sheets with solder to width of 1-1/2 inches; however, reduce pre-tinning where pre-tinned surface would show in completed Work.

1. Do not solder metallic-coated steel sheet.
2. Do not pre-tin zinc-tin alloy-coated stainless steel.
3. Do not use torches for soldering.

4. Heat surfaces to receive solder, and flow solder into joint. Fill joint completely. Completely remove flux and spatter from exposed surfaces.
5. Stainless-Steel Soldering: Tin edges of uncoated sheets, using solder for stainless steel and acid flux. Promptly remove acid flux residue from metal after tinning and soldering. Comply with solder manufacturer's recommended methods for cleaning and neutralization.
6. Copper Soldering: Tin edges of uncoated sheets, using solder for copper.
7. Copper-Clad Stainless-Steel Soldering: Tin edges of uncoated sheets, using solder for copper-clad stainless steel.

H. Rivets: Rivet joints in zinc where necessary for strength.

4. ROOF-DRAINAGE SYSTEM INSTALLATION

A. General: Install sheet metal roof-drainage items to produce complete roof-drainage system according to cited sheet metal standard unless otherwise indicated. Coordinate installation of roof perimeter flashing with installation of roof-drainage system.

B. Hanging Gutters: Join sections with riveted and soldered joints or joints sealed with sealant as shown and specified on drawings or summary/scope of work. Provide for thermal expansion. Attach gutters at eave or fascia to firmly anchor them in position. Provide end closures and seal watertight with sealant. Slope to downspouts.

1. Fasten gutter spacers to front and back of gutter.
2. Anchor and loosely lock back edge of gutter to continuous cleat, eave or apron flashing.
3. Anchor back of gutter that extends onto roof deck with cleats spaced not more than 24 inches apart.
4. Anchor gutter with gutter brackets and straps spaced not more than 24 inches apart to roof deck, unless otherwise indicated, and loosely lock to front gutter bead.
5. Anchor gutter with spikes and ferrules spaced not more than 24 inches apart.
6. Install gutter with expansion joints at locations indicated, but not exceeding, 50 feet apart. Install expansion-joint caps.
7. Install continuous gutter screens on gutters with noncorrosive fasteners, removable for cleaning gutters.

C. Conductor Heads: Anchor securely to wall, with elevation of conductor head rim at minimum of 1 inch below gutter discharge.

D. Expansion-Joint Covers: Install expansion-joint covers at locations and of configuration indicated. Lap joints minimum of 4 inches in direction of water flow.

5. ROOF FLASHING INSTALLATION

A. General: Install sheet metal flashing and trim to comply with performance requirements**,** sheet metal manufacturer's written installation instructions, and cited sheet metal standard. Provide concealed fasteners where possible, and set units true

to line, levels, and slopes. Install work with laps, joints, and seams that are permanently watertight and weather resistant.

B. Roof Edge Flashing: Anchor to resist uplift and outward forces according to recommendations in FM Global Property Loss Prevention Data Sheet 1-49 for FM Approvals' listing for required windstorm classification. All roof edge flashings are to incorporate a minimum 22 gauge continuous cleat.

C. Copings: Anchor to resist uplift and outward forces according to recommendations in cited sheet metal standard unless otherwise indicated.

1. Interlock exterior bottom edge of coping with continuous cleat anchored to substrate at 24-inch centers.
2. Anchor interior leg of coping with washers and screw fasteners through slotted holes at 24-inch centers.

D. Copings: Anchor to resist uplift and outward forces according to recommendations in FM Global Property Loss Prevention Data Sheet 1-49 for specified FM Approvals' listing for required windstorm classification.

E. Pipe or Post Counterflashing: Install counterflashing umbrella with close-fitting collar with top edge flared for elastomeric sealant, extending minimum of 4 inches over base flashing. Install stainless-steel draw band and tighten.

F. Counterflashing: Coordinate installation of counterflashing with installation of base flashing. Insert counterflashing in reglets or receivers and fit tightly to base flashing. Extend counterflashing 4 inches over base flashing. Lap counterflashing joints minimum of 4 inches. Secure in waterproof manner by means of interlocking folded seam or blind rivets and sealant, anchor and washer at 36-inch centers unless otherwise indicated.

G. Roof-Penetration Flashing: Coordinate installation of roof-penetration flashing with installation of roofing and other items penetrating roof. Seal with elastomeric sealant and clamp flashing to pipes that penetrate roof.

6. WALL FLASHING INSTALLATION

A. General: Install sheet metal wall flashing to intercept and exclude penetrating moisture according to cited sheet metal standard unless otherwise indicated. Coordinate installation of wall flashing with installation of wall-opening components such as windows, doors, and louvers.

B. Through-Wall Flashing: Installation of through-wall flashing is specified in Section 042000 "Unit Masonry."Section092400 "Cement Plastering."

C. Opening Flashings in Frame Construction: Install continuous head, sill, jamb, and similar flashings to extend 4 inches beyond wall openings.

7. MISCELLANEOUS FLASHING INSTALLATION

A. Equipment Support Flashing: Coordinate installation of equipment support flashing with installation of roofing and equipment. Weld or seal flashing with elastomeric sealant to equipment support member.

B. Overhead-Piping Safety Pans: Suspend pans from structure above, independent of other overhead items such as equipment, piping, and conduit, unless otherwise indicated on Drawings. Pipe and install drain line to plumbing waste or drainage system.

8. ERECTION TOLERANCES

A. Installation Tolerances: Shim and align sheet metal flashing and trim within installed tolerance of 1/4 inch in 20 feet on slope and location lines indicated on Drawings and within 1/8-inch offset of adjoining faces and of alignment of matching profiles.

B. Installation Tolerances: Shim and align sheet metal flashing and trim within installed tolerances specified in MCA's "Guide Specification for Residential Metal Roofing."

9. CLEANING AND PROTECTION

A. Clean exposed metal surfaces of substances that interfere with uniform oxidation and weathering.

B. Clean and neutralize flux materials. Clean off excess solder.

C. Clean off excess sealants.

D. Remove temporary protective coverings and strippable films as sheet metal flashing and trim are installed unless otherwise indicated in manufacturer's written installation instructions. On completion of sheet metal flashing and trim installation, remove unused materials and clean finished surfaces as recommended by sheet metal flashing and trim manufacturer. Maintain sheet metal flashing and trim in clean condition during construction.

E. Replace sheet metal flashing and trim that have been damaged or that have deteriorated beyond successful repair by finish touchup or similar minor repair procedures.

END OF SECTION 07 62 00

ASBESTOS INSPECTION REPORT

NOVEMBER 22, 2023

BEM PROJECT NO. 23-63560

Site

Fremont Elementary School
1120 West 22nd Street
Merced, CA 95340

Prepared For

Mr. Steve Whitaker
MCSD
444 West 23rd Street
Merced, CA 95340

Prepared By

BOVEE ENVIRONMENTAL MANAGEMENT, INC.
1643 3rd Street, Escalon, CA 95320
Escalon 209-847-3800 • Fresno 559-264-3800 • Bakersfield 661-246-2110 • Sacramento 916-564-3838

November 22, 2023

Mr. Steve Whitaker
MCSD
444 West 23rd Street
Merced, CA 95340

Mr. Whitaker:

Bovee Environmental Management, Inc. (BEM) is pleased to provide this Asbestos Survey Report regarding our asbestos inspection services at the Project Site summarized below.

I. PROJECT SUMMARY TABLE

PROJECT SITE NAME	PROJECT SITE LOCATION	PROJECT SITE NOTE
Fremont Elementary School	1120 West 22nd Street, Merced, CA 95340	Renovation

INSPECTION TYPE	INSPECTED AREAS	INSPECTION DATE
Commercial Asbestos Survey	Class 3-6, 8-11, 12-14, Multi-Purpose, Library	November 21, 2023

II. INSPECTION SUMMARY

Samples of building materials considered to be *suspect asbestos containing materials** were identified and collected from the inspected renovation areas referenced above to determine their asbestos content. Samples collected from specific areas for the purpose of renovation activities are determined by the client. There maybe areas within the Subject Site that were not inspected and may contain additional suspect asbestos containing materials that were not sampled. Through proper chain-of-custody the collected samples are sent to Central Valley Laboratories for polarized light microscopy (PLM) analysis. A summary of all materials sampled and corresponding analytical results are listed below. Detailed information regarding sample number, actual sample location and analytical methods can be reviewed in attachments A and B.

SAMPLE COLLECTION SUMMARY

*See definitions on page 2.

#	MATERIAL SAMPLED	MATERIAL LOCATION	ASBESTOS	CATEGORY	SQ.FT.
6356-01	Roofing Material	Class 3-6; All Layers of Rooftop	None Detected	-	-
6356-02	Roofing Material	Class 8-11; All Layers of Rooftop	None Detected	-	-
6356-03	Roofing Material	Class 12-14; All Layers of Rooftop	None Detected	-	-
6356-04	Roofing Material	Library; All Layers of Rooftop	None Detected	-	-
6356-05	Roofing Material	Multi-Purpose Room; All Layers of Rooftop	None Detected	-	-

III. DEFINITIONS (*)

Suspect Asbestos Containing Material (ACM) - Local air quality management districts consider a material that is not wood, metal or glass, to be a suspect ACM. All suspect ACMs are assumed to contain asbestos until laboratory analysis confirms that a material has no asbestos content.

Category – ACM's are classified as either "friable", material that can be easily crushed or pulverized by normal hand pressure or as "non-friable", material that cannot be easily crushed or pulverized by normal hand pressure. *Friable ACMs are considered a Regulated Asbestos Containing Material (RACM) requiring Class I work practices and engineering controls. Non-friable ACMs are considered either Category I or Category II Asbestos Containing Material requiring Class II work practices and engineering controls.*

Trace - Analytical result that is equal to or less than 1.0 percent asbestos by weight, but greater than 0.1 percent. Materials with a trace amount of asbestos have to be removed as asbestos containing construction material (ACCM) according to Cal-OSHA, but can be disposed as non-ACM upon point count analyses according to federal and state EPA regulations.

Homogeneous – Multiple samples collected of a suspect material that is similar in general appearance and from areas that appear to have been constructed at the same time are considered homogeneous. If multiple samples are collected from a similar material within a homogeneous area and only one of the multiple samples is found to contain asbestos, regulations mandate that the entirety of that material with the homogeneous area must be considered an ACM.

VFT – Vinyl Floor Tile TBD – To be determined

IV. ASBESTOS REGULATORY STANDARDS

California Occupational Safety and Health Administration (Cal-OSHA)

- Friable and Non-Friable ACCMs containing more than 0.1 percent asbestos by weight are regulated.
- Enforces regulations pertaining to workers performing ACCM removal and workers in close proximity.
- Contractors who disturb more than 100 square feet or 160 lineal feet of ACCM must be registered by the contractor's state license board as an asbestos removal contractor.
- Contractors who disturb any amount of ACCM must ensure employee protection by providing accredited training, medical examinations, personal protective equipment and a negative exposure assessment.

United States Environmental Protection Agency (EPA)

- Friable and Non-Friable ACMs containing more than 1.0 percent asbestos by weight are regulated.
- Enforces regulations pertaining to protecting the environment, not workers.
- Abatement Contractors who disturb more than 160 square feet or 260 linear feet of ACM must comply with the National Emissions Standards for Hazardous Air Pollutants Asbestos Regulations (40 CFR 61, Subpart M) and all state and federal requirements regarding asbestos.

Local Air Quality Control Districts

- Friable and Non-Friable ACM's containing more than 1.0 percent asbestos by weight are regulated.
- Enforces regulations pertaining to local air quality; "No Visible Air Emissions".
- Require an asbestos survey prior to renovation or demolition.
- Abatement Contractors who disturb more than 160 square feet or 260 linear feet of ACM must comply with the National Emissions Standards for Hazardous Air Pollutants Asbestos Regulations (40 CFR 61, Subpart M).

V. RECOMMENDATIONS

BEM recommends compliance with all federal, state and local regulations concerning asbestos.

VI. WARRANTY

Samples of suspect asbestos containing building materials, which could be disturbed during construction activities, are collected by BEM. Site inspections and sample collection methodologies are performed to meet regulatory standards and industry protocols. BEM warrants that the findings contained herein have been promulgated in general accordance with accepted professional practices at the time of its preparation as applied by professionals in the community. There is a possibility that conditions may exist in which suspect ACM's could not be identified within the scope of the survey or were not apparent or accessible during the site visit. All scheduled work should cease and additional samples should be collected if unidentified suspect ACM's are discovered during construction activities. If roofing materials were collected for this survey, BEM is not responsible for damages caused by sampling locations or roofing warranty voids with the manufacturer.

If quantities of asbestos containing materials are stated in this report, they are supplied for budgetary and regulatory notification purposes only. They should not be relied on for abatement bidding purposes.

VII. DISCLAIMER

If asbestos containing materials were impacted and/or damaged during a fire loss, then the soft and/or porous building materials and personal contents should be removed and disposed of as Asbestos Containing Building Materials (ACBM). The hard and/or nonporous building materials and personal contents can be cleaned and decontaminated on site. The locations surrounding the damaged areas should be considered contaminated with asbestos. BEM cannot assume these other areas were not impacted with asbestos. BEM recommends to either assume the building materials and/or personal contents within these surrounding locations are contaminated with asbestos; or micro-vac TEM samples can be collected within these surrounding locations to determine if the asbestos contamination migrated to these surrounding locations adjacent to the known contamination.

VIII. CERTIFICATION

Inspection services relative to the Subject Site were provided by BEM's Mr. Brett L. Bovée & Anthony J. Miller, Certified Asbestos Consultants, No. 95-1643, expiration on 03/08/2024 & Number 19-6474, expiration on 04/17/2024.

BEM looks forward to assisting you in the near future. If you have any questions regarding this report or other BEM services, please do not hesitate to call us at (209) 847-3800 or (559) 264-3800.

Regards,

Brett L. Bovée

Brett L. Bovée, CAC, CMC, CDPH
Certified Asbestos Consultant No. 95-1643

Anthony J. Miller

Anthony J. Miller, CAC, CDPH
Certified Asbestos Consultant No. 19-6474

ATTACHMENT A

BEM

SAMPLE FIELD SHEET

CHAIN OF CUSTODY

1643 3RD STREET
ESCALON, CA 95320
833-643-3800 • BEM@BOVEEINC.COM

BEM PROJECT #	23-63560	TURN-AROUND TIME
SAMPLE DATE:	11-21-23	● SAME DAY ○ 24HOURS
SURVEY TYPE:	Reno	○

Project Name:	Fremont Elementary School; comm
Address:	1120 West 22nd St. Merced CA 95340
Type of Loss:	Asb Reno
Areas Inspected:	Classrooms 3-6; 8-11; 12-14, Library, Multipurpose Rm

Point Count Trace Results: ● YES-400 ○ YES-1000 ○ NO

Sample#	Sample Description	Surface	T. Time	LPM	Vol./Qua.	PLM	XRF	PCM	Mold Direct	E-COLI	TEM	AAS
63560-01	Mat. Desc.: Roofing Material Mat. Loc.: Classroom 3-6 - All Layers of Rooftop	W C FL ○○○				●	○	○	○	○	○	○
-02	Mat. Desc.: Roofing Material Mat. Loc.: Classroom 8-11 - All Layers of Rooftop	W C FL ○○○				●	○	○	○	○	○	○
-03	Mat. Desc.: Roofing Material Mat. Loc.: Classroom 12-14 - All Layers of Rooftop	W C FL ○○○				●	○	○	○	○	○	○
-04	Mat. Desc.: Roofing Material Mat. Loc.: Library - All Layers of Rooftop	W C FL ○○○				●	○	○	○	○	○	○
-05	Mat. Desc.: Roofing Material Mat. Loc.: Multi-Purpose Rm - All Layers of Rooftop	W C FL ○○○				●	○	○	○	○	○	○
	Mat. Desc.: Mat. Loc.:	W C FL ○○○				○	○	○	○	○	○	○
	Mat. Desc.: Mat. Loc.:	W C FL ○○○				○	○	○	○	○	○	○
	Mat. Desc.: Mat. Loc.:	W C FL ○○○				○	○	○	○	○	○	○
	Mat. Desc.: Mat. Loc.:	W C FL ○○○				○	○	○	○	○	○	○
	Mat. Desc.: Mat. Loc.:	W C FL ○○○				○	○	○	○	○	○	○
	Mat. Desc.: Mat. Loc.:	W C FL ○○○				○	○	○	○	○	○	○
	Mat. Desc.: Mat. Loc.:	W C FL ○○○				○	○	○	○	○	○	○
	Mat. Desc.: Mat. Loc.:	W C FL ○○○				○	○	○	○	○	○	○
	Mat. Desc.: Mat. Loc.:	W C FL ○○○				○	○	○	○	○	○	○
	Mat. Desc.: Mat. Loc.:	W C FL ○○○				○	○	○	○	○	○	○
	Mat. Desc.: Mat. Loc.:	W C FL ○○○				○	○	○	○	○	○	○
	Mat. Desc.: Mat. Loc.:	W C FL ○○○				○	○	○	○	○	○	○

Relinquished by: J. Winburn	Received by: AF	Relinquished by:	Received by:
X [signature]	X	X	X
Time/Date: 11-21-23	Time/Date: 11/21/23 3:40PM	Time/Date:	Time/Date:

BEM USE ONLY: **Accept Samples** ☑ **Yes** **In.** AF **date** 11/21 Version: FCOC.03.15.22.1/1.QM

ATTACHMENT B

LABORATORY ANALYTICAL REPORT

Report Prepared For:
Bovee Environmental Management
1643 3rd Street
Escalon, CA 95320

Client Project: 23-63560
Report ID: AE232716

Dear Customer:

Enclosed are asbestos analysis results for PLM Bulk samples received at our laboratory on **November 21, 2023**. The samples were analyzed for asbestos using polarizing light microscopy (PLM) under EPA 600/R-93/116 and EPA – Appendix E to Subpart E of 40 CFR Part 763 Methods.

Sample results containing >1% asbestos are considered asbestos-containing materials (ACMs) per EPA regulatory requirements. The detection limit for the EPA 600 Method is <1% asbestos by weight as determined by visual estimation.

TOTAL SAMPLES ANALYZED: 5
TOTAL LAYERS ANALYZED: 10
 # LAYERS >1% ASBESTOS: 0

Kind Regards,

Danielle Carrier
Laboratory Director

NVLAP TESTING
NVLAP Lab Code 600260

ASBESTOS REPORT SUMMARY

By: POLARIZED LIGHT MICROSCOPY

Client Project: 23-63560 **Report ID:** AE232716

Client: Bovee Environmental Management
1643 3rd Street
Escalon, CA 95320

Methodology: EPA 600/R-93/116 and EPA – Appendix E to Subpart E of 40 CFR Part 763

Client ID	Layer	Lab ID	Color	Sample Description	% Asbestos
63560-01	1	AE2321037	Black;White	Roofing Material	None Detected
	2		White	Roofing Material	None Detected
63560-02	1	AE2321038	White	Roofing Material	None Detected
	2		White	Roofing Material	None Detected
63560-03	1	AE2321039	White	Roofing Material	None Detected
	2		White	Roofing Material	None Detected
63560-04	1	AE2321040	White	Roofing Material	None Detected
	2		White	Roofing Material	None Detected
63560-05	1	AE2321041	Black;White	Roofing Material	None Detected
	2		White	Roofing Material	None Detected

ASBESTOS BULK ANALYSIS

By: POLARIZED LIGHT MICROSCOPY

CENTRAL VALLEY LABORATORIES

Client: Bovee Environmental Management
1643 3rd Street
Escalon, CA 95320

Report ID: AE232716
Received: 11/21/2023
Analyzed: 11/21/2023
Reported: 11/22/2023

Client Project: 23-63560

Methodology: EPA 600/R-93/116 and EPA – Appendix E to Subpart E of 40 CFR Part 763

Client ID Sample ID	Lab Description	Lab Attributes	NON-ASBESTOS COMPONENTS Fibrous		Non-Fibrous		ASBESTOS %
63560-01 AE2321037	LAYER 1 Roofing Material	Black;White Heterogeneous Fibrous Bound	Synthetic Fiber	10%	Silicates Binder/Filler	15% 75%	None Detected
	LAYER 2 Roofing Material	White Heterogeneous Fibrous Bound	Fiberglass	15%	Gypsum	85%	None Detected
63560-02 AE2321038	LAYER 1 Roofing Material	White Heterogeneous Fibrous Bound	Synthetic Fiber	30%	Binder/Filler Silicates Mastic	55% 10% 5%	None Detected
	LAYER 2 Roofing Material	White Heterogeneous Fibrous Bound	Fiberglass	15%	Gypsum	85%	None Detected
63560-03 AE2321039	LAYER 1 Roofing Material	White Heterogeneous Fibrous Bound	Synthetic Fiber	30%	Binder/Filler Silicates Mastic	55% 10% 5%	None Detected
	LAYER 2 Roofing Material	White Heterogeneous Fibrous Bound	Fiberglass	15%	Gypsum	85%	None Detected
63560-04 AE2321040	LAYER 1 Roofing Material	White Heterogeneous Fibrous Bound	Synthetic Fiber	30%	Binder/Filler Silicates Mastic	55% 10% 5%	None Detected
	LAYER 2 Roofing Material	White Heterogeneous Fibrous Bound	Fiberglass	15%	Gypsum	85%	None Detected

ASBESTOS BULK ANALYSIS

By: POLARIZED LIGHT MICROSCOPY

CENTRAL VALLEY LABORATORIES

Report ID: AE232716
Received: 11/21/2023
Analyzed: 11/21/2023
Reported: 11/22/2023

Client: Bovee Environmental Management
1643 3rd Street
Escalon, CA 95320

Client Project: 23-63560

Methodology: EPA 600/R-93/116 and EPA – Appendix E to Subpart E of 40 CFR Part 763

Client ID Sample ID	Lab Description	Lab Attributes	NON-ASBESTOS COMPONENTS Fibrous		Non-Fibrous		ASBESTOS %
63560-05 AE2321041	LAYER 1 Roofing Material	Black;White Heterogeneous Fibrous Bound	Synthetic Fiber	10%	Silicates Binder/Filler	15% 75%	None Detected
	LAYER 2 Roofing Material	White Heterogeneous Fibrous Bound	Fiberglass	15%	Gypsum	85%	None Detected

ASBESTOS BULK ANALYSIS

By: POLARIZED LIGHT MICROSCOPY

CENTRAL VALLEY LABORATORIES

Report ID: AE232716
Received: 11/21/2023
Analyzed: 11/21/2023
Reported: 11/22/2023

Client: Bovee Environmental Management
1643 3rd Street
Escalon, CA 95320

Client Project: 23-63560

Methodology: EPA 600/R-93/116 and EPA – Appendix E to Subpart E of 40 CFR Part 763

LEGEND:	Non-Anth = Non-Asbestiform Anthophyllite Non-Trem = Non-Asbestiform Tremolite
METHOD:	EPA 600/R-93/116 and EPA – Appendix E to Subpart E of 40 CFR Part 763
REPORTING LIMIT:	<1% by Visual Estimation
REPORTING LIMIT FOR POINT COUNTS:	0.25% by 400 Points or 0.1% by 1,000 Points
REGULATORY LIMIT:	>1% by Weight

Due to the limitations of the EPA 600 method, nonfriable organically bound materials (NOBs) such as vinyl floor tiles can be difficult to analyze via polarized light microscopy (PLM). EPA recommends that all NOBs analyzed by PLM, and found not to contain asbestos, be further analyzed by Transmission Electron Microscopy (TEM). Please note that PLM analysis of dust and soil samples for asbestos is not covered under any of Central Valley Laboratories' accreditations. Estimated measurement of uncertainty is available on request.

This report relates only to the samples tested or analyzed and may not be reproduced, except in full, without written approval by Central Valley Laboratories (CVL). CVL makes no warranty representation regarding the accuracy of customer submitted information in preparing and presenting analytical results. Interpretation of the analytical results is the sole responsibility of the customer. Samples were received in acceptable condition unless otherwise noted. This report may not be used by the customer to claim product endorsement by NVLAP, AIHA, ELAP, or any agency of the U.S. Government.

CVL is accredited with the Environmental Laboratory Accreditation Program (ELAP) under Certificate Number 3013.

CVL is accredited for Asbestos Analysis of Bulk Building Materials by PLM by the National Voluntary Laboratory Accreditation Program (NVLAP Lab Code 600260-0).

Report Authorized By

Danielle Carrier, Laboratory Director 11/22/2023 Date

Analyzed By

Ashlie Fuller 11/22/2023 Date

NVLAP TESTING
NVLAP Lab Code 600260

ATTACHMENT C

SITE DRAWING

23-63560

1120 West 22nd St. Merced CA 95340

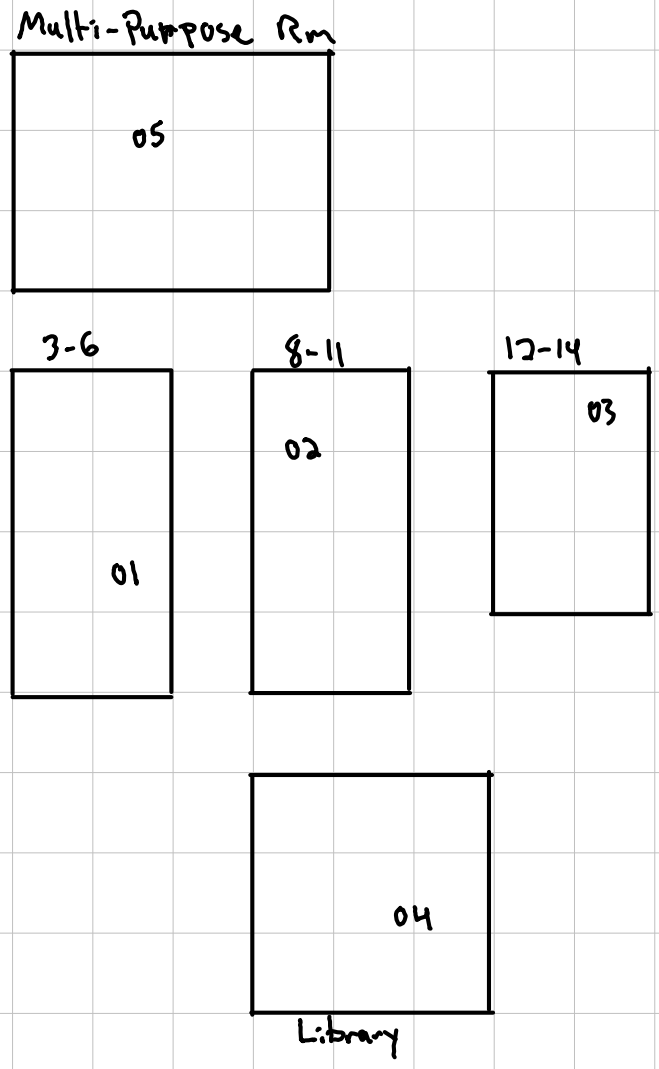

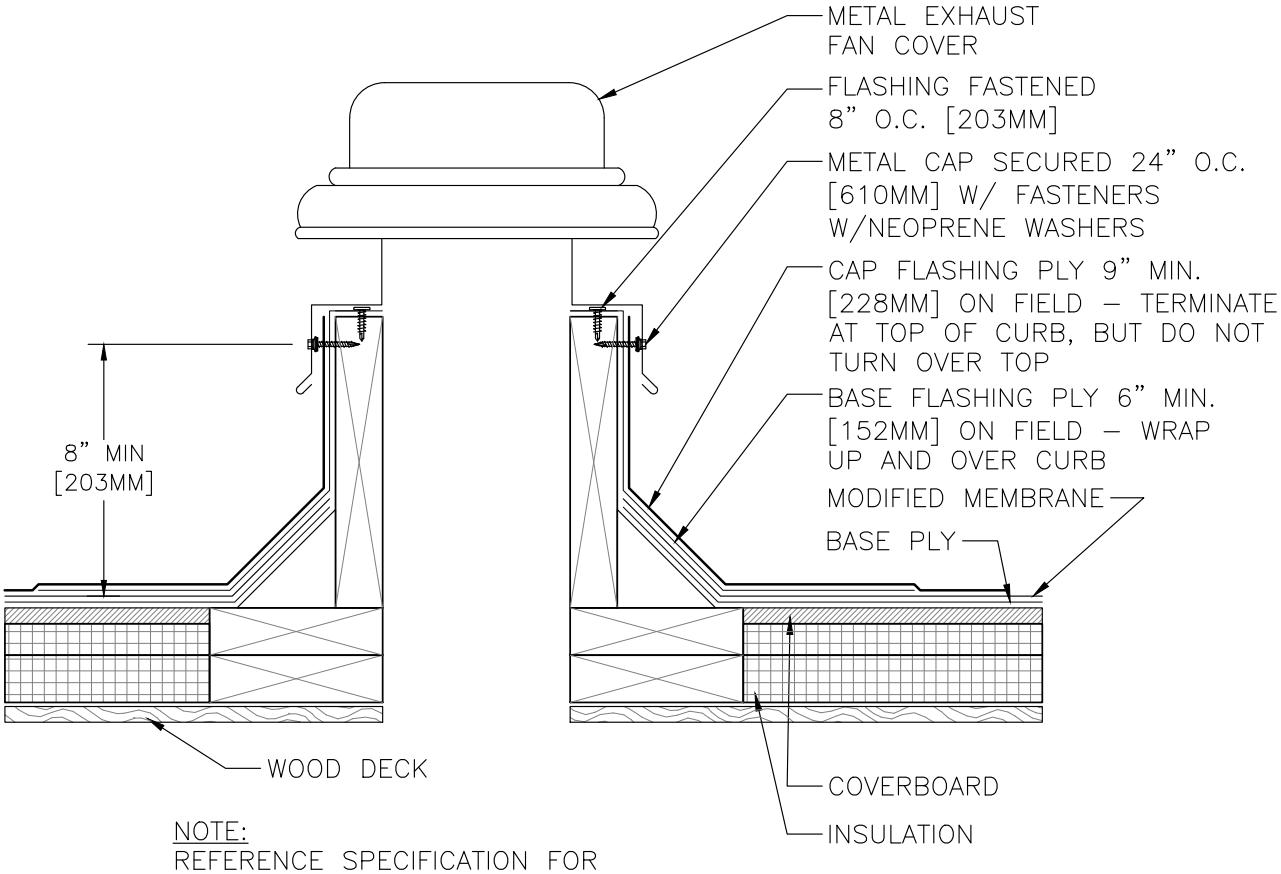

NOTE:
REFERENCE SPECIFICATION FOR SURFACING, MEMBRANE ADHESIVE TYPE, AND INSULATION/COVER BOARD TYPE AND ATTACHMENT METHOD.

DRAWINGS ON $8\frac{1}{2}$"x11 TITLE BLOCKS ARE NOT TO SCALE.

EXHAUST FAN

GARLAND since 1895

THE GARLAND COMPANY, INC.
GARLAND CANADA, INC.
THE GARLAND COMPANY UK, LTD

PROJECT:	
CUSTOMER:	
ARCHITECT:	
REPRESENTATIVE:	
DATE:	SHT: OF

© 2019 Garland Industries, Inc.

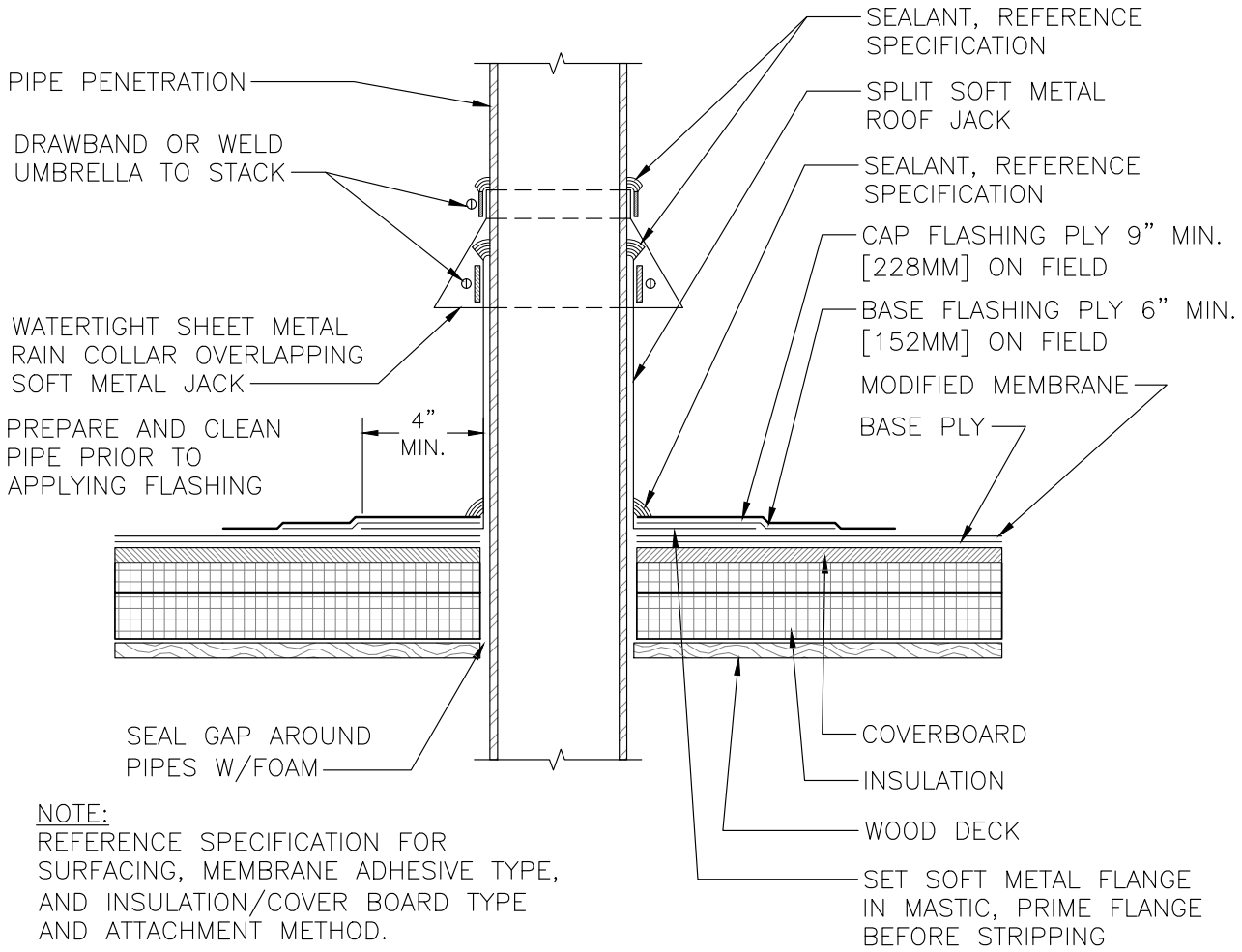

NOTE:
REFERENCE SPECIFICATION FOR SURFACING, MEMBRANE ADHESIVE TYPE, AND INSULATION/COVER BOARD TYPE AND ATTACHMENT METHOD.

DRAWINGS ON $8\frac{1}{2}$"x11 TITLE BLOCKS ARE NOT TO SCALE.

PIPE/TUBE PENETRATION - SPLIT JACK w/COLLAR

GARLAND since 1895

THE GARLAND COMPANY, INC.
GARLAND CANADA, INC.
THE GARLAND COMPANY UK, LTD

PROJECT:	
CUSTOMER:	
ARCHITECT:	
REPRESENTATIVE:	
DATE:	SHT: OF

© 2019 Garland Industries, Inc.

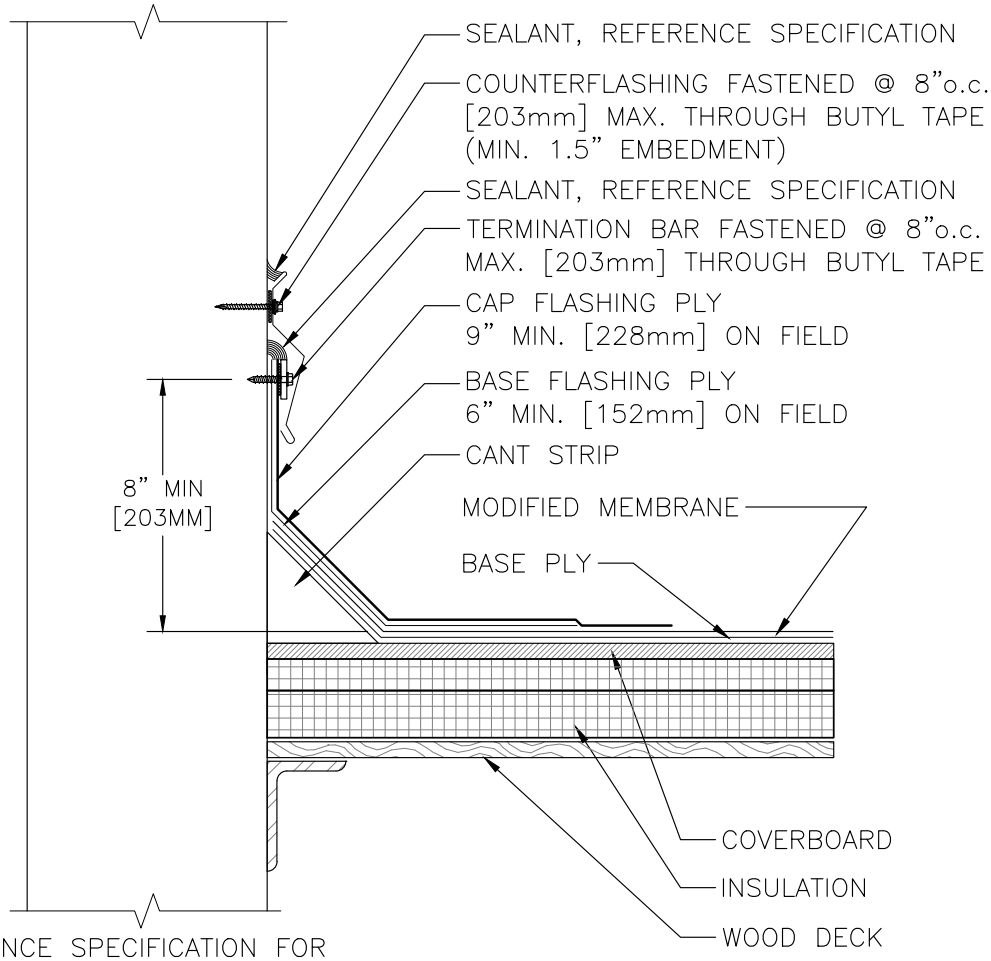

NOTE:
REFERENCE SPECIFICATION FOR SURFACING, MEMBRANE ADHESIVE TYPE, AND INSULATION/COVER BOARD TYPE AND ATTACHMENT METHOD.

DRAWINGS ON $8\frac{1}{2}$"x11 TITLE BLOCKS ARE NOT TO SCALE.

WALL FLASHING - SURFACE MOUNTED COUNTERFLASHING

GARLAND since 1895

THE GARLAND COMPANY, INC.
GARLAND CANADA, INC.
THE GARLAND COMPANY UK, LTD

PROJECT:	
CUSTOMER:	
ARCHITECT:	
REPRESENTATIVE:	
DATE:	SHT: OF

© 2019 Garland Industries, Inc.

FILENAME: LSR_2Ply_MB_W_RoofDrainWOverflowSumped_ALT.dwg

2 PLY MOD BIT

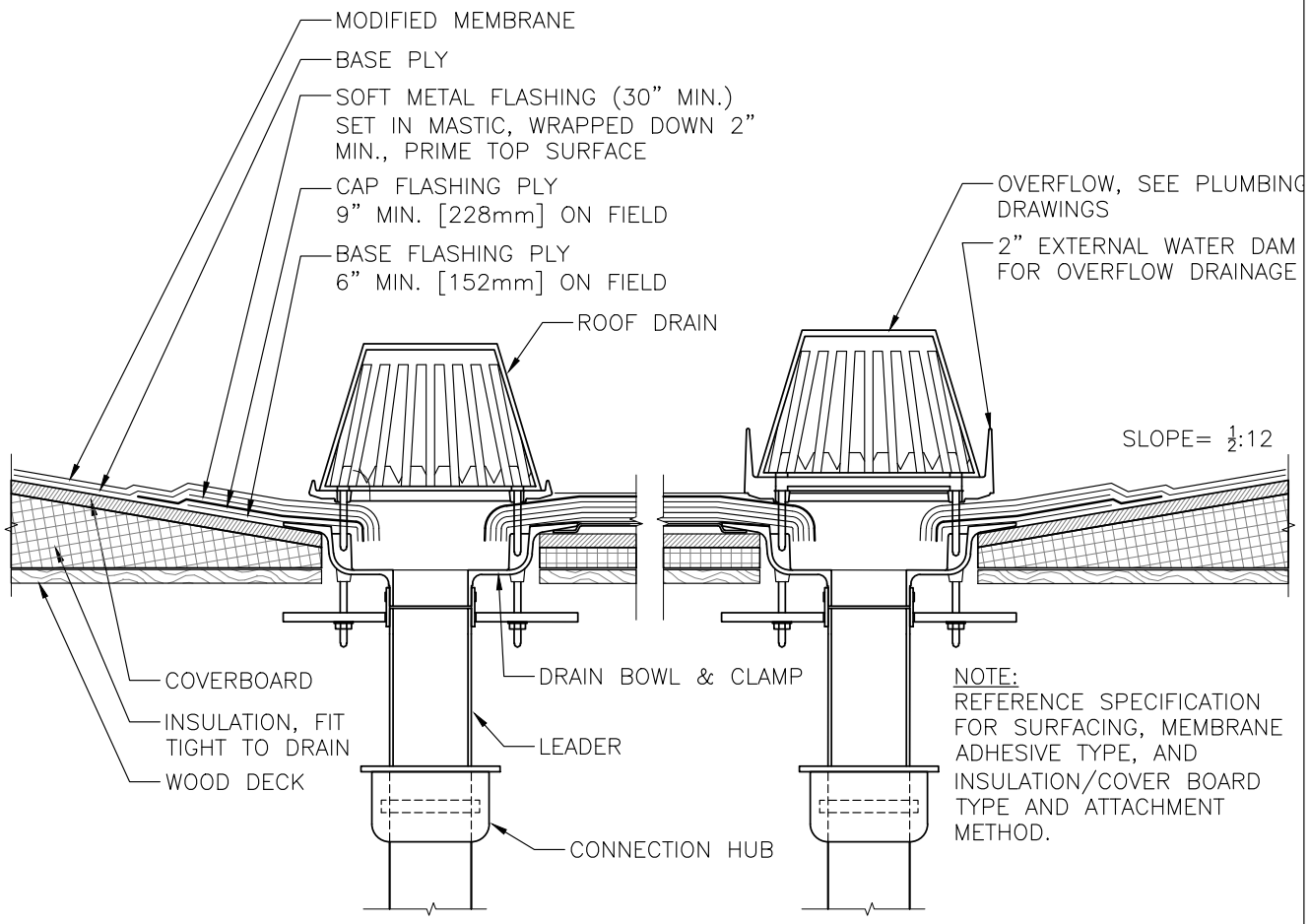

DRAWINGS ON 8½"x11 TITLE BLOCKS ARE NOT TO SCALE.

ROOF DRAIN AND OVERFLOW SUMPED (ALTERNATE)

GARLAND since 1895

THE GARLAND COMPANY, INC.
GARLAND CANADA, INC.
THE GARLAND COMPANY UK, LTD

PROJECT:	
CUSTOMER:	
ARCHITECT:	
REPRESENTATIVE:	
DATE:	SHT: OF

© 2019 Garland Industries, Inc.

FILENAME: LSR_2Ply_MB_W_TypicalCoatedSurface.dwg

2 PLY MOD BIT

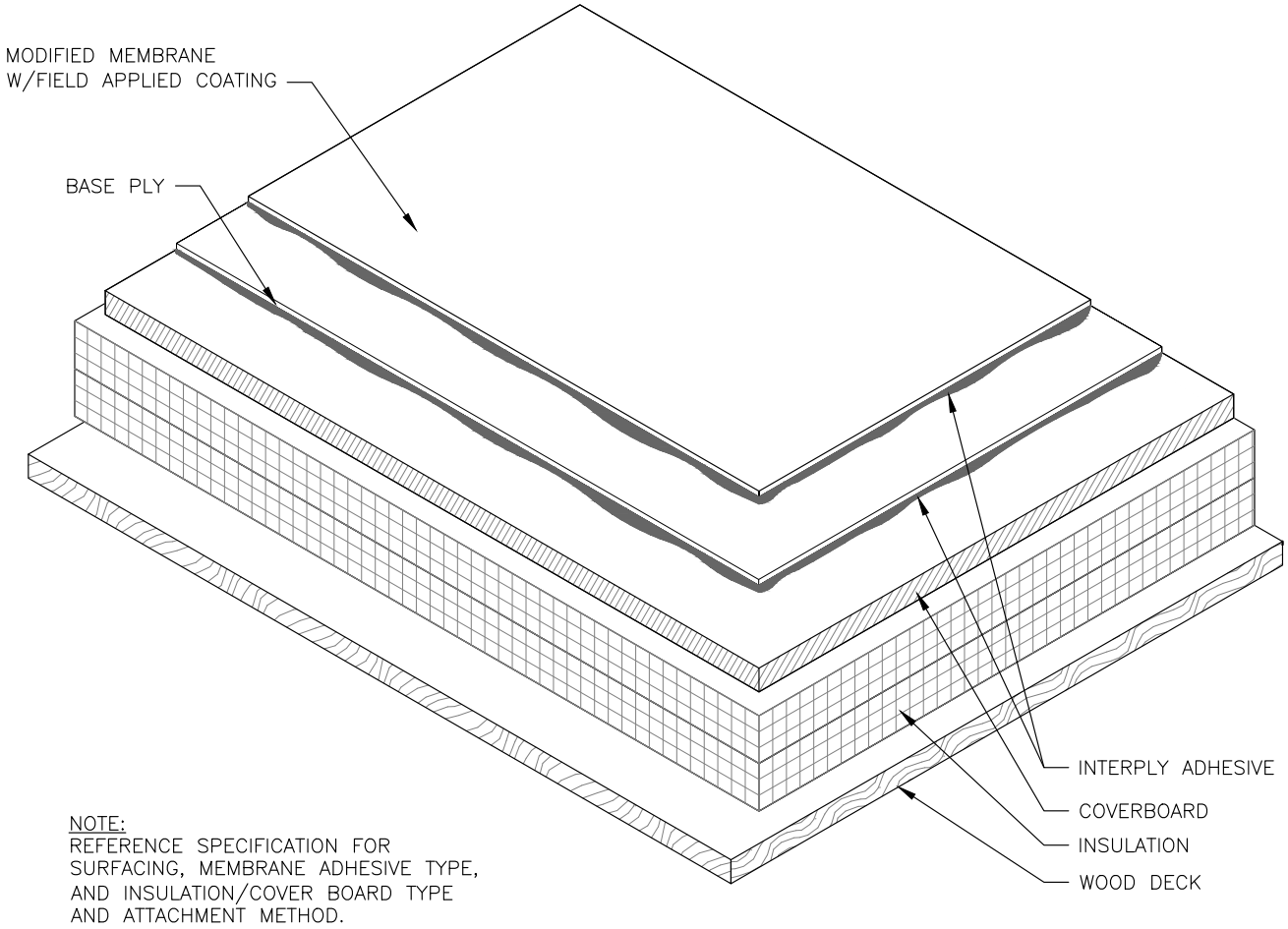

NOTE:
REFERENCE SPECIFICATION FOR SURFACING, MEMBRANE ADHESIVE TYPE, AND INSULATION/COVER BOARD TYPE AND ATTACHMENT METHOD.

DRAWINGS ON $8\frac{1}{2}$"x11 TITLE BLOCKS ARE NOT TO SCALE.

TYPICAL ROOF SYSTEM - COATED SURFACE

since 1895

THE GARLAND COMPANY, INC.
GARLAND CANADA, INC.
THE GARLAND COMPANY UK, LTD

PROJECT:	
CUSTOMER:	
ARCHITECT:	
REPRESENTATIVE:	
DATE:	SHT: OF

© 2019 Garland Industries, Inc.

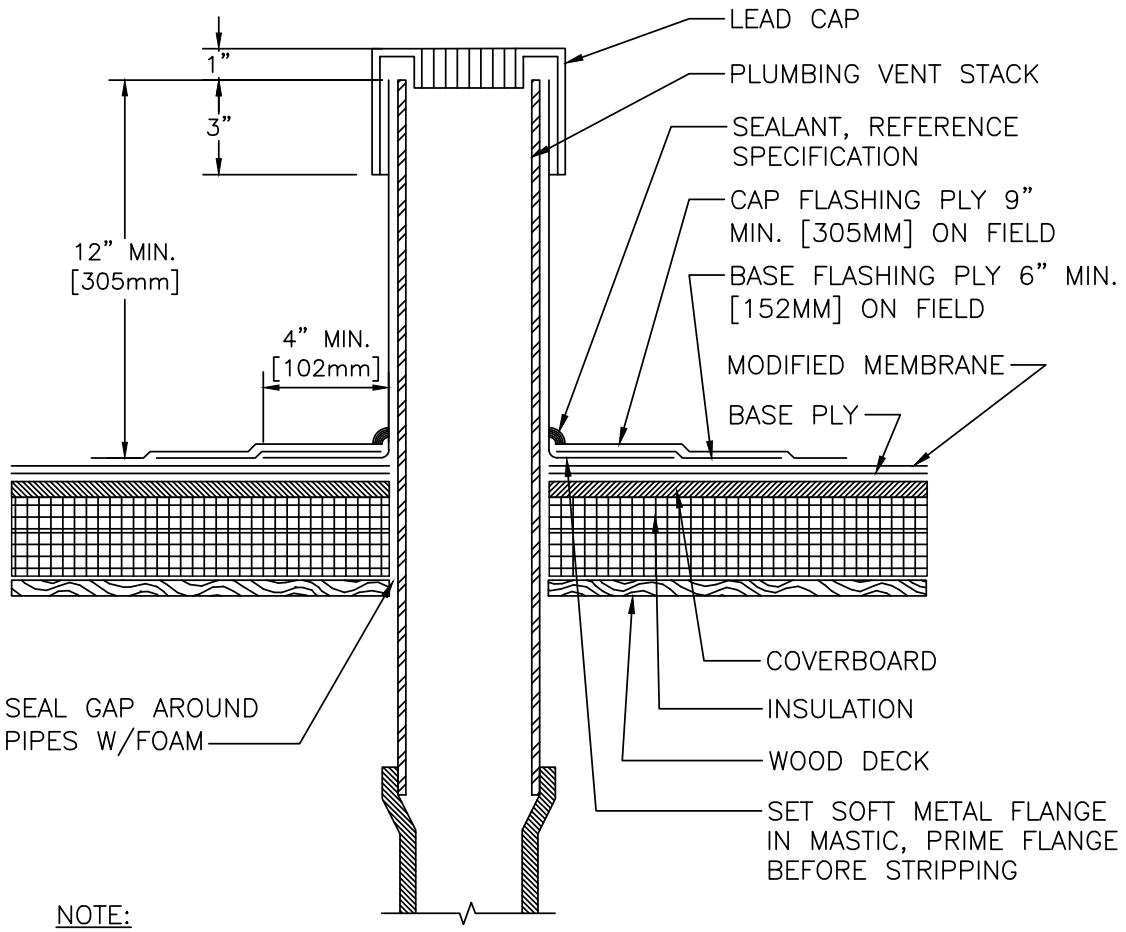

NOTE:
REFERENCE SPECIFICATION FOR SURFACING, MEMBRANE ADHESIVE TYPE, AND INSULATION/COVER BOARD TYPE AND ATTACHMENT METHOD.

DRAWINGS ON 8½"x11 TITLE BLOCKS ARE NOT TO SCALE.

PLUMBING STACK

THE GARLAND COMPANY, INC.
GARLAND CANADA, INC.
THE GARLAND COMPANY UK, LTD

since 1895

PROJECT:	
CUSTOMER:	
ARCHITECT:	
REPRESENTATIVE:	
DATE:	SHT: OF

© 2019 Garland Industries, Inc.

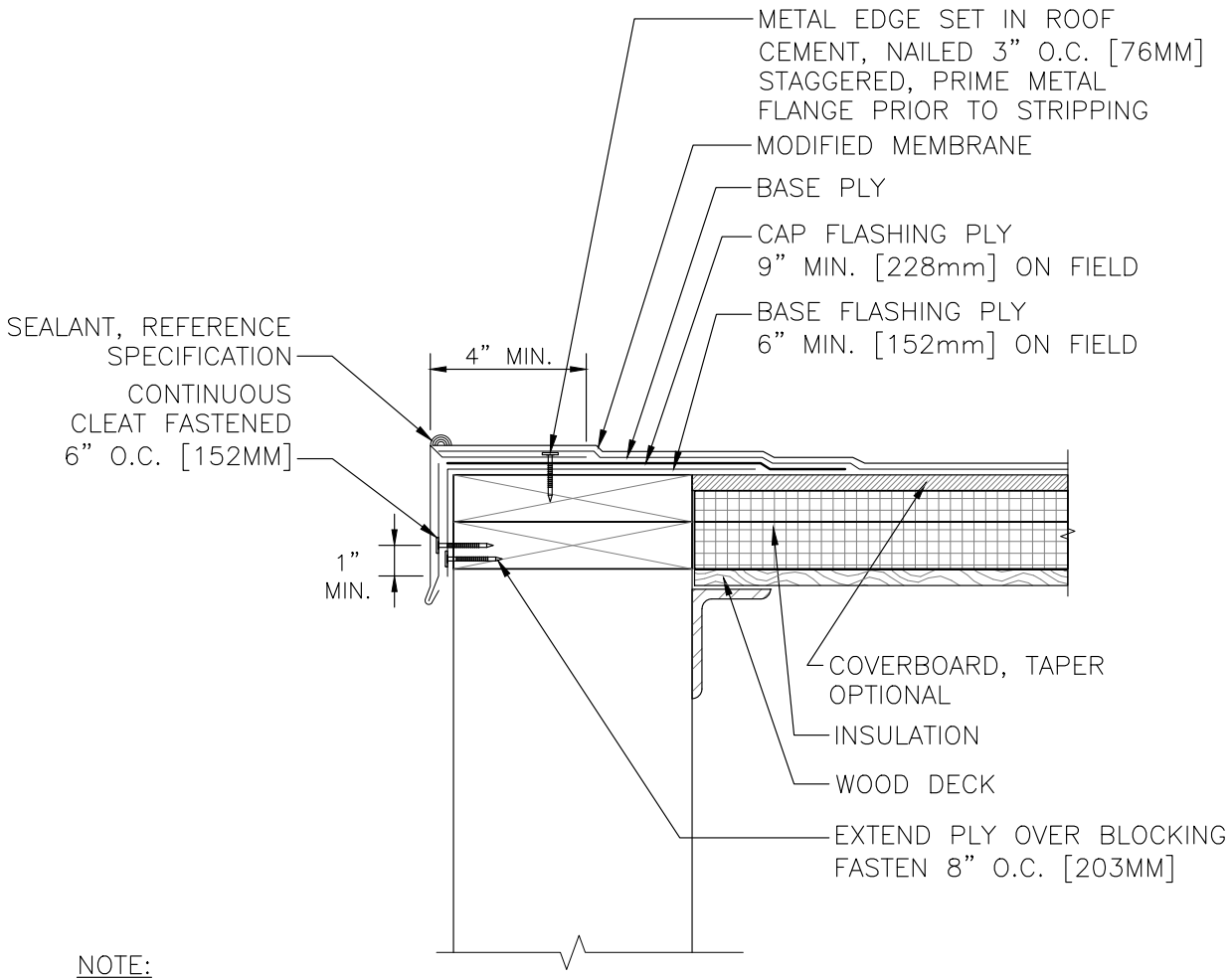

NOTE:
REFERENCE SPECIFICATION FOR SURFACING, MEMBRANE ADHESIVE TYPE, AND INSULATION/COVER BOARD TYPE AND ATTACHMENT METHOD.

DRAWINGS ON $8\frac{1}{2}$"x11 TITLE BLOCKS ARE NOT TO SCALE.

METAL EDGE - DRIP EDGE (ALTERNATE)

since 1895

THE GARLAND COMPANY, INC.
GARLAND CANADA, INC.
THE GARLAND COMPANY UK, LTD

PROJECT:	
CUSTOMER:	
ARCHITECT:	
REPRESENTATIVE:	
DATE:	SHT: OF

© 2019 Garland Industries, Inc.

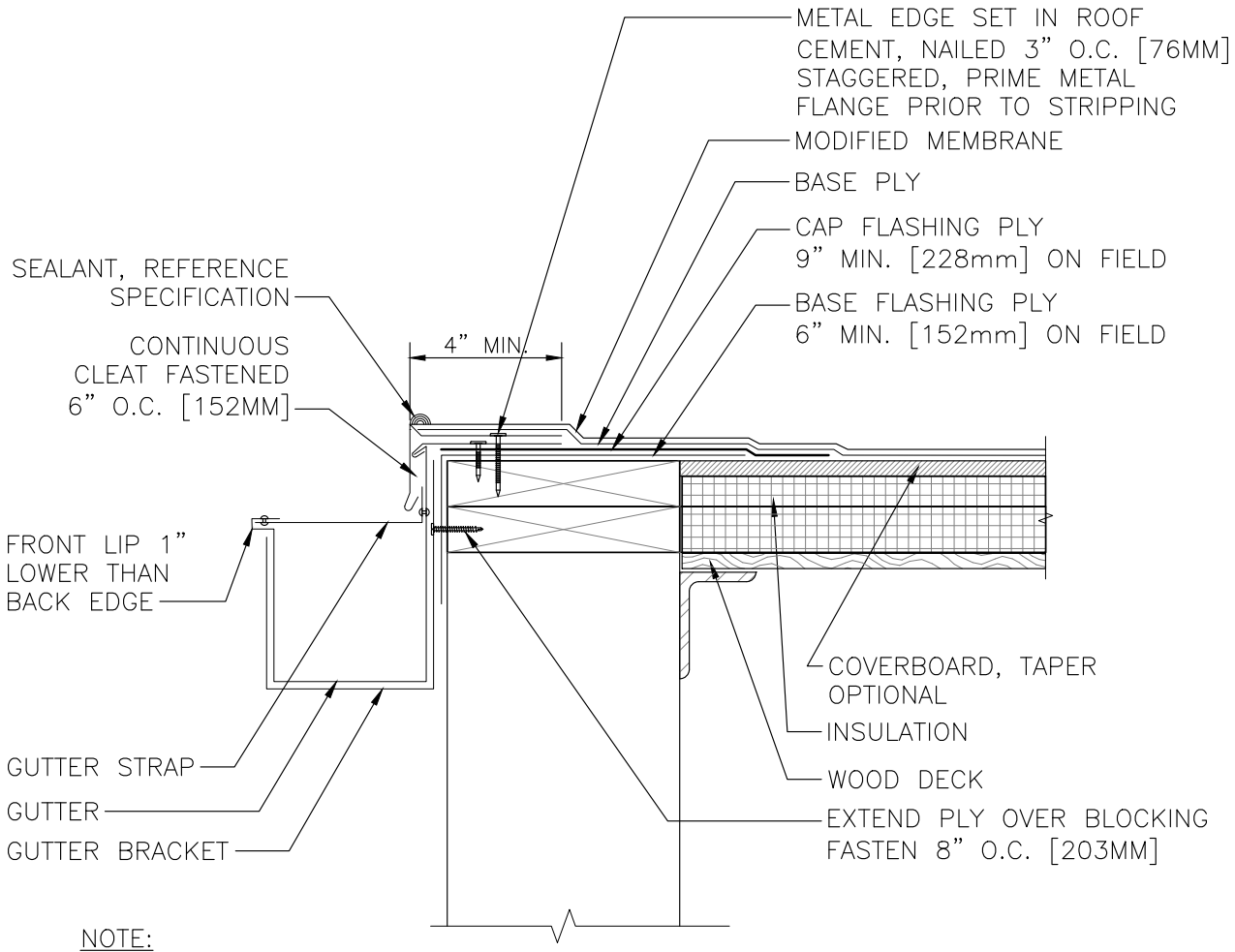

NOTE:
REFERENCE SPECIFICATION FOR SURFACING, MEMBRANE ADHESIVE TYPE, AND INSULATION/COVER BOARD TYPE AND ATTACHMENT METHOD.

DRAWINGS ON 8½"x11 TITLE BLOCKS ARE NOT TO SCALE.

METAL EDGE - DRIP EDGE WITH GUTTER (ALTERNATE)

GARLAND since 1895

THE GARLAND COMPANY, INC.
GARLAND CANADA, INC.
THE GARLAND COMPANY UK, LTD

PROJECT:	
CUSTOMER:	
ARCHITECT:	
REPRESENTATIVE:	
DATE:	SHT: OF

© 2019 Garland Industries, Inc.

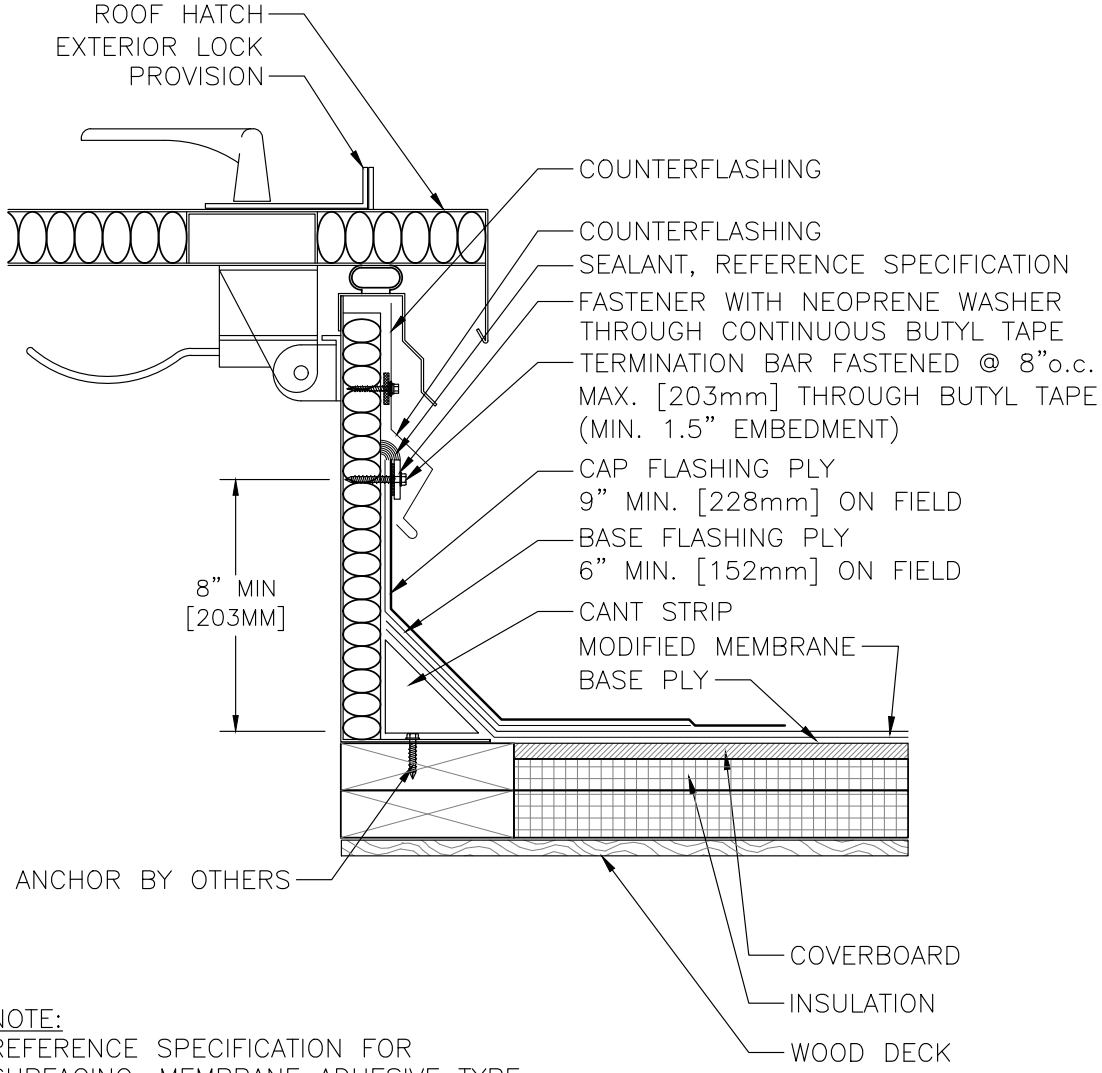

NOTE:
REFERENCE SPECIFICATION FOR SURFACING, MEMBRANE ADHESIVE TYPE, AND INSULATION/COVER BOARD TYPE AND ATTACHMENT METHOD.

DRAWINGS ON $8\frac{1}{2}$"x11 TITLE BLOCKS ARE NOT TO SCALE.

HATCH DETAIL

THE GARLAND COMPANY, INC.
GARLAND CANADA, INC.
THE GARLAND COMPANY UK, LTD

since 1895

PROJECT:		
CUSTOMER:		
ARCHITECT:		
REPRESENTATIVE:		
DATE:	SHT:	OF

© 2019 Garland Industries, Inc.

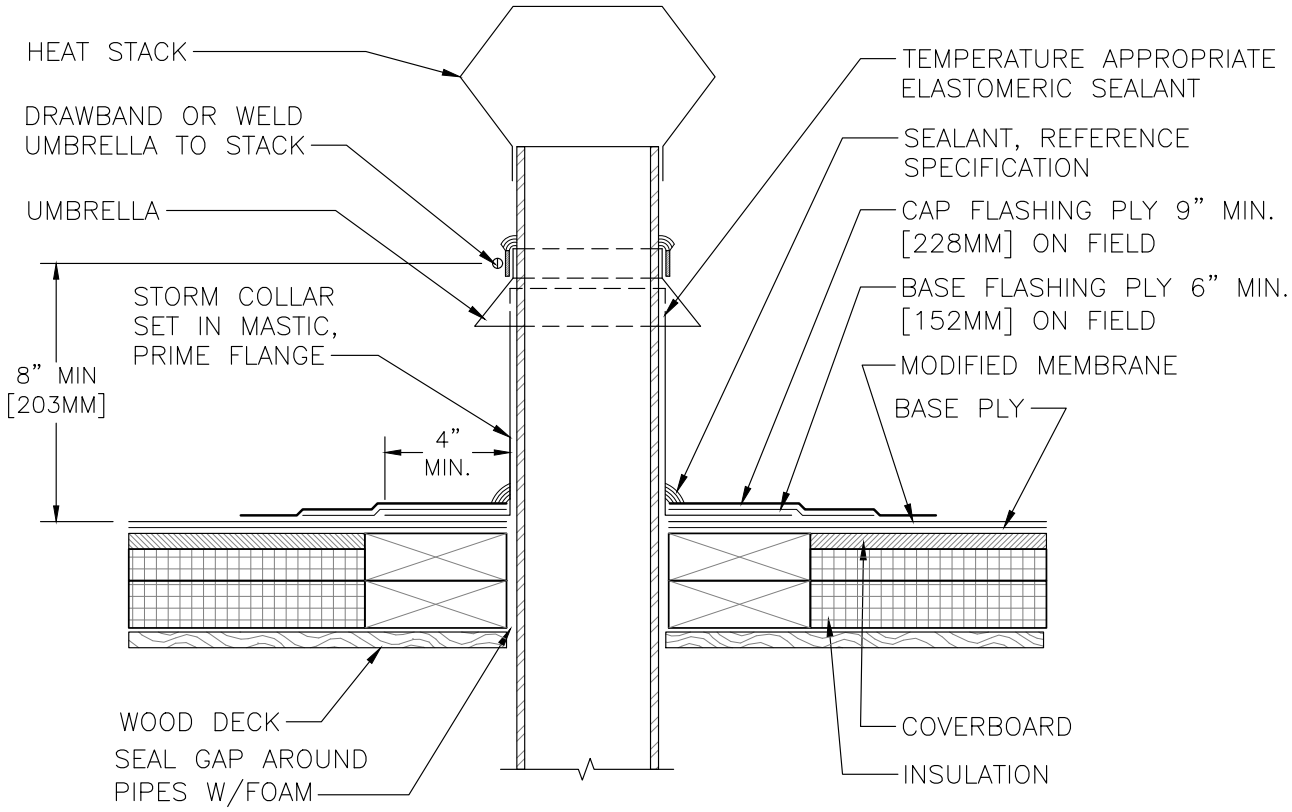

NOTE:
REFERENCE SPECIFICATION FOR SURFACING, MEMBRANE ADHESIVE TYPE, AND INSULATION/COVER BOARD TYPE AND ATTACHMENT METHOD.

DRAWINGS ON 8½"x11 TITLE BLOCKS ARE NOT TO SCALE.

HEAT STACK

THE GARLAND COMPANY, INC.
GARLAND CANADA, INC.
THE GARLAND COMPANY UK, LTD

since 1895

PROJECT:	
CUSTOMER:	
ARCHITECT:	
REPRESENTATIVE:	
DATE:	SHT: OF

© 2019 Garland Industries, Inc.

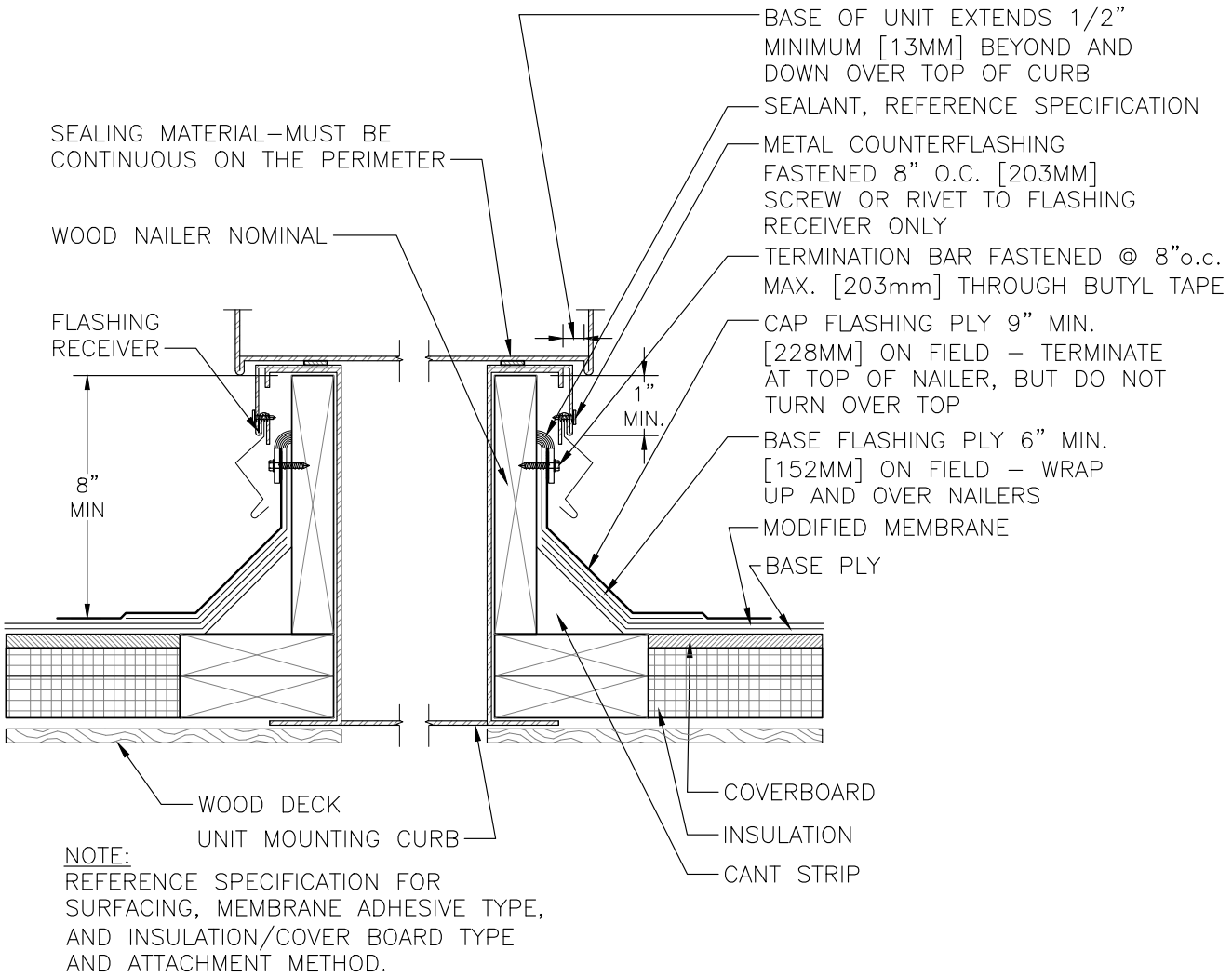

NOTE:
REFERENCE SPECIFICATION FOR SURFACING, MEMBRANE ADHESIVE TYPE, AND INSULATION/COVER BOARD TYPE AND ATTACHMENT METHOD.

DRAWINGS ON $8\frac{1}{2}$"x11 TITLE BLOCKS ARE NOT TO SCALE.

CURB DETAIL / AIR HANDLING STATION

GARLAND® since 1895

THE GARLAND COMPANY, INC.
GARLAND CANADA, INC.
THE GARLAND COMPANY UK, LTD

PROJECT:	
CUSTOMER:	
ARCHITECT:	
REPRESENTATIVE:	
DATE:	SHT: OF

© 2019 Garland Industries, Inc.

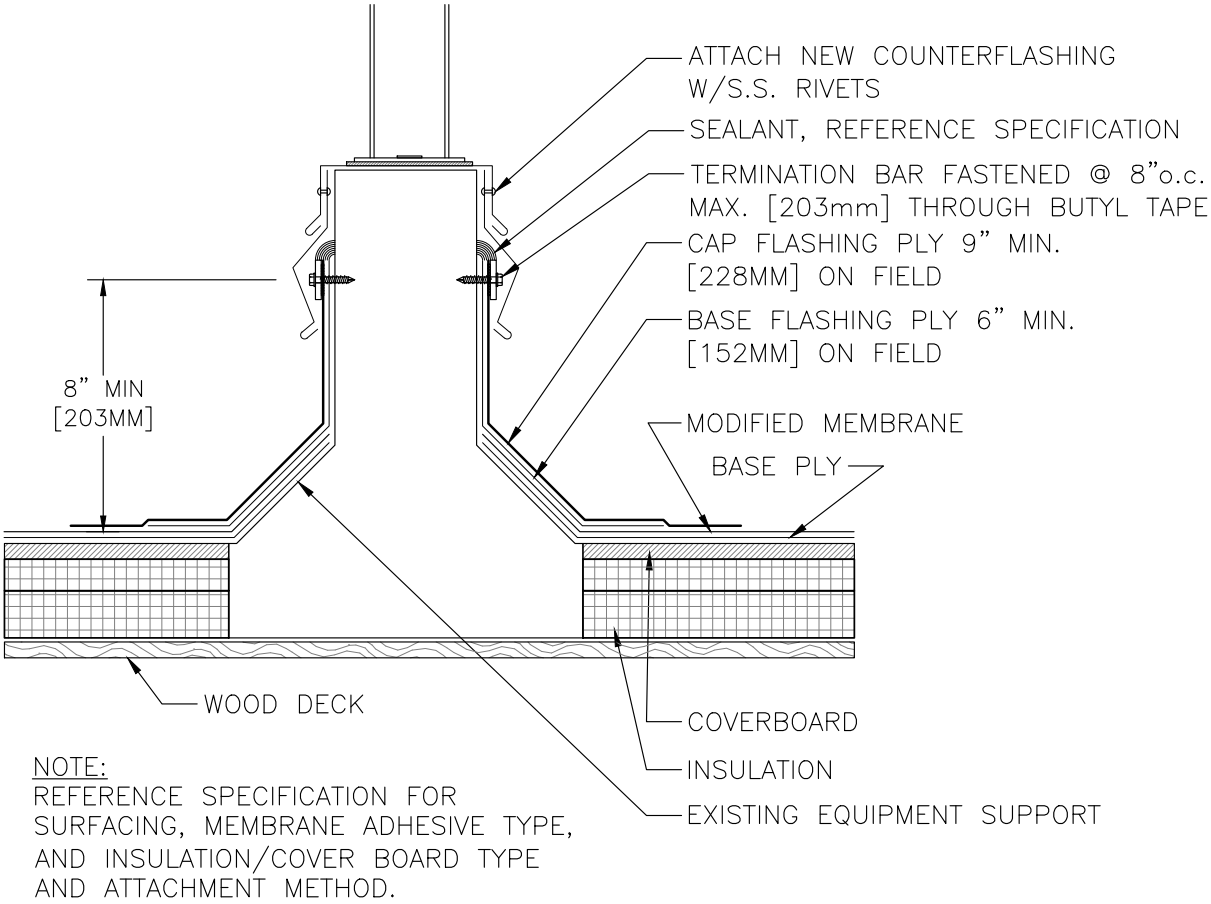

NOTE:
REFERENCE SPECIFICATION FOR SURFACING, MEMBRANE ADHESIVE TYPE, AND INSULATION/COVER BOARD TYPE AND ATTACHMENT METHOD.

DRAWINGS ON $8\frac{1}{2}$"x11 TITLE BLOCKS ARE NOT TO SCALE.

EQUIPMENT SUPPORT - PREMANUFACTURED - EXISTING

THE GARLAND COMPANY, INC.
GARLAND CANADA, INC.
THE GARLAND COMPANY UK, LTD

since 1895

PROJECT:	
CUSTOMER:	
ARCHITECT:	
REPRESENTATIVE:	
DATE:	SHT: OF

© 2019 Garland Industries, Inc.