ERMA REESE ELEMENTARY SCHOOL

1800 W ELM ST, LODI, CA 95242

LODI UNIFIED SCHOOL DISTRICT

BRIDGE PORTABLES

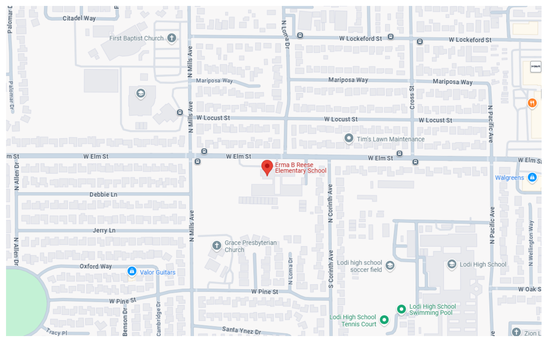

VICINITY MAP
N.T.S.

APPLICABLE CODES [Effective January 1, 2025 (u.o.n.)]:

TITLE 19, C.C.R. PUBLIC SAFETY DIVISION 1, STATE FIRE MARSHAL REGULATIONS
TITLE 24, C.C.R. PART 1, 2025 BUILDING STANDARDS ADMINISTRATIVE CODE
TITLE 24, C.C.R. PART 2, 2022 CALIFORNIA BUILDING CODE, VOL. 1 & 2
TITLE 24, C.C.R. PART 3, 2022 CALIFORNIA ELECTRICAL CODE
TITLE 24, C.C.R. PART 4, 2022 CALIFORNIA MECHANICAL CODE
TITLE 24, C.C.R. PART 5, 2022 CALIFORNIA PLUMBING CODE
TITLE 24, C.C.R. PART 6, 2022 CALIFORNIA ENERGY CODE
TITLE 24, C.C.R. PART 9, 2022 CALIFORNIA FIRE CODE
TITLE 24, C.C.R. PART 10, 2022 CALIFORNIA EXISTING BUILDING CODE
TITLE 24, C.C.R. PART 11, 2022 CALIFORNIA GREEN BUILDING STANDARDS CODE
TITLE 24, C.C.R. PART 12, 2022 CALIFORNIA REFERENCE STANDARDS
(SEE 2022 CBC CHAPTER 35 AND CFC CHAPTER 80 FOR REFERENCED STANDARDS CURRENTLY IN AFFECT)
2023 CALIFORNIA BUILDING CODE VALUATION THRESHOLD: $195,358
2022 NFPA 13, INSTALLATION OF SPRINKLER SYSTEMS (CA AMENDED)
2022 NFPA 24, PRIVATE FIRE MAINS
2022 NFPA 72, NATIONAL FIRE ALARM CODE

INSPECTOR CLASSIFICATION:

A "DSA CERTIFIED" PROJECT INSPECTOR EMPLOYED BY THE DISTRICT (OWNER) AND APPROVED BY DSA SHALL PROVIDE CONTINUOUS INSPECTION OF THE WORK. THE DUTIES OF THE INSPECTOR ARE DEFINED IN SECTION 4-342, PART 1, TITLE 24, CCR. A MINIMUM CLASS 3 INSPECTOR IS REQUIRED.

DEFERRED APPROVALS:

NONE

THIS PROJECT (#02-123433) CANNOT BE CERTIFIED UNTIL THE FOLLOWING PROJECTS ARE CERTIFIED:

- #02-101294 UNIT 22 PORTABLE CLASSROOM BUILDING

DSA PROJECT TRACKING NUMBER: 68585-281

FILE NUMBER: 39-50

APPLICATION NUMBER: 02-123433

SCOPE OF WORK:

- A 960 (1,140 SF W/ OVERHANGS) SQUARE FOOT PORTABLE CLASSROOM BUILDING RELOCATED FROM STOCKPILE (DSA# 04-123059, #04-123316 & SERIAL # C-23-2987 A/B). BUILDING IS TO BE MOVED AS SEPARATE MODULES AND THEN RECONNECTED ON SITE.
- BUILDING TO BE SET ON A WOOD FOUNDATION O/ ASPHALT PAVING.
- BUILDING SHALL BE PROVIDED WITH A METAL RAMP.
- BUILDING TO BE CONNECTED TO THE SITE'S FIRE ALARM, DATA, INTERCOM, EMS, AND INTRUSION ALARM SYSTEMS
- ACCESSIBLE PATH OF TRAVEL UPGRADES

EXEMPTIONS:

- FENCING IS NOT PART OF DSA/SSS & FLS REVIEW AS PER DSA IR A-22
- EPOXY SHEAR DOWELS IN SITE FLATWORK IS EXEMPT FROM STRUCTURAL TESTS & SPECIAL INSPECTIONS. REFER TO DSA 103-22 IN THE PROJECT MANUAL.

FIRE SAFETY DURING CONSTRUCTION AND DEMOLITION:

- ALL CONSTRUCTION AND DEMOLITION SHALL BE IN ACCORDANCE WITH CHAPTER 33 OF THE CBC AND CFC, DSA BU 24-05, AND THE WRITTEN SITE SAFETY PLAN.

FORM DSA 152-IPI:

- PRIOR TO INSTALLATION OF PORTABLE BUILDING AT THE SITE PER STOCKPILE APPLICATION 04-123059, THE TEAM MUST SUBMIT TO DSA THE IN-PLANT INSPECTOR INSPECTION CARD / VERIFIED REPORT FORM DSA 152-IPI FOR THE STOCKPILE APPLICATION UPLOADED TO DSABOX

CA ENERGY CODE ACCEPTANCE TESTS

THE CALIFORNIA ENERGY CODE SECTION 10-103 REQUIRES ACCEPTANCE TESTING ON ALL NEWLY INSTALLED LIGHTING CONTROLS, MECHANICAL SYSTEMS, ENVELOPES, AND PROCESS EQUIPMENT AFTER INSTALLATION AND BEFORE PROJECT COMPLETEION. AB ACCEPTANCE TEST IS A FUNCTIONAL PERFORMANCE TEST TO HELP ENSURE THAT NEWLY INSTALLED EQUIPMENT IS OPERATING IN COPLIANCE WITH ENERGY CODE.

LIGHTING CONTROLS ACCEPTANCE TESTS MUST BE PERFORMED BY A CERTIFIED LIGTING CONTROLS ACCEPTACE TEST TECHNICIAN (ATT).

MECHANICAL SYSTEM ACCEPTANCE TESTS MUST BE PERFORMED BY A CERTIFIED ATT FOR PROJECTS SUBMITTED ON OR AFTER OCTOBER 1, 2021.

ENVELOPE AND PROCESS EQUIPMENT ACCEPTANCE TESTS SHALL BE PERFORMED BY INSTALLING CONTRACTOR, ENGINEER/ARCHITECT OF RECORD OR THE OWNER'S AGENT.

A LISTING OF CERTIFIED ATT CAN BE FOUND AT: HTTPS://WWW.ENERGY.CA.GOV/PROGRAMS-AND-TOPICS/PROGRAMS/ACCEPTANCE-TEST-TECHNICIAN-CERTIFICATION-PROVIDER-PROGRAM/ACCEPTANCE.

THE ACCEPTANCE TESTING PROCEDURES MUST BE REPEATED, AND DEFICIENCIES MUST BE CORRECTED BY THE BUILDER OR INSTALLING CONTRACTOR UNTIL THE CONSTRUCTION/INSTALLATION OF THE SPECIFIED SYSTEMS CONFORM AND PASS THE REQUIRED ACCEPTANCE CRITERIA.

PROJECT INSPECTORS WILL COLLECT THE FORMS TO CONFIRM THAT THE REQUIRED ACCEPTANCE TESTS HAVE BEEN COMPLETED.

ARCHITECHNICA

OWNER

LODI UNIFIED SCHOOL DISTRICT
1305 East Vine Street
Lodi, CA 95240

DISTRICT SUPERINTENDENT:
Dr. Neil Young
P: (209) 331-7010
E: nyoung@lodiusd.net

PLANNING ANALYST
Desire Wise
P: (209) 331-7225
E: dwise@lodiusd.net

CIVIL ENGINEER

WARREN CONSULTING ENGINEERS, INC.
1117 Winfied Way, Suite 110
El Dorado Hills, CA 95762
P: (916) 985-1870
F: (916) 985-1877
E: anthony@wceinc.com
E: jim@wceinc.com

Design Team:
Anthony Tassano, P.E. - Principal
Jim Stephens, Project Manager

ARCHITECT

ARCHITECHNICA

555 W. Benjamin Holt Drive, Suite 423
Stockton, CA 95207
P: (209) 952-5850
F: (209) 952-2442
E: hello@architechnica.net
www.architechnica.net

Design Team:
Bob Machado, AIA - Principal Architect
Tim Dearborn, AIA - Principal Architect
Haya Dajani - Designer / Project Technician

MECHANICAL ENGINEER

ALEXANDER SCHEFLO & ASSOCIATES
2926 Pacific Ave.
Stockton, CA 95204
P: (209) 948-9761 ext. 1003
F: (209) 948-1258
E: mitch@aschefloeng.com
www. aschefloeng.com

DESIGN TEAM:
Mitch Scheflo, P.E. - Mechanical Engineer

ELECTRICAL ENGINEER

HCS ENGINEERING, INC.
4512 Feather River Dr., Suite F
Stockton, CA 95219
P: (209) 478-8270
F: (209) 478-2169
E: richard@hcs-eng.com
www.hcs-eng.com

DESIGN TEAM:
Richard Smith, P.E. - Principal Electrical Designer

ALL WORK SHALL CONFORM TO 2022 TITLE 24, CALIFORNIA CODE OF REGULATIONS (CCR).

CHANGES TO THE APPROVED DRAWINGS AND SPECIFICATIONS SHALL BE MADE BY AN ADDENDUM OR A CONSTRUCTION CHANGE DOCUMENT (CCD) APPROVED BY THE DIVISION OF THE STATE ARCHITECT, AS REQUIRED BY SECTION 4-338, PART 1, TITLE 24, CCR.

A "DSA CERTIFIED" PROJECT INSPECTOR EMPLOYED BY THE DISTRICT (OWNER) AND APPROVED BY THE DSA SHALL PROVIDE CONTINUOUS INSPECTION OF THE WORK. THE DUTIES OF THE INSPECTOR ARE DEFINED IN SECTION 4-342, PART 1, TITLE 24, CCR.

A DSA ACCEPTED TESTING LABORATORY DIRECTLY EMPLOYED BY THE DISTRICT (OWNER) SHALL CONDUCT ALL THE REQUIRED TESTS AND INSPECTIONS FOR THE PROJECT.

THE INTENT OF THESE DRAWINGS AND SPECIFICATIONS IS THAT THE WORK OF THE RELOCATION IS TO BE IN ACCORDANCE WITH TITLE 24, CCR. SHOULD ANY EXISTING CONDITIONS SUCH AS DETERIORATION OR NON-COMPLYING CONSTRUCTION BE DISCOVERED WHICH IS NOT COVERED BY THE CONTRACT DOCUMENTS WHEREIN THE FINISHED WORK WILL NOT COMPLY WITH TITLE 24, CCR, A CONSTRUCTION CHANGE DOCUMENT (CCD), OR A SEPARATE SET OF PLANS AND SPECIFICATIONS, DETAILING AND SPECIFYING THE REQUIRED WORK SHALL BE SUBMITTED TO AND APPROVED BY DSA BEFORE PROCEEDING WITH THE WORK. (SECTION 4-317(C), PART 1, TITLE 24, CCR).

GRADING PLANS, DRAINAGE IMPROVEMENTS, ROAD AND ACCESS REQUIREMENTS AND ENVIRONMENTAL HEALTH CONSIDERATIONS SHALL COMPLY WITH ALL LOCAL ORDINANCES.

SUBSTITIONS AFFECTING DSA REGULATED ITEMS SHALL BE CONSIDERED AS A CONSTRUCTION CHANGE DOCUMENT OR ADDENDUM, AND SHALL BE APPROVED BY DSA PRIOR TO FABRICATION AND INSTALLATION PER DSA IR A-6 AND SECTION 338(C) PART 1, TITLE 24 CCR.

NOTE: PER IR 16-1 SECTION 5.3 DETERIORATION OR EXISTING NON-COMPLIANT CONSTRUCTION, IF ANY CONDITION IS DISCOVERED WHICH, IF LEFT UNCORRECTED, WOULD MAKE THE BUILDING NON-COMPLIANT WITH THE REQUIREMENTS OF THE EDITION OF THE CBC IN FORCE AT THE TIME OF ORIGINAL CONSTRUCTION, THE CONDITION MUST BE CORRECTED IN ACCORDANCE WITH CURRENT CODE REQUIREMENTS. A CONSTRUCTION CHANGE DOCUMENT, OR A SEPARATE SET OF PLANS AND SPECIFICATIONS DETAILING AND SPECIFYING THE REQUIRED REPAIR WORK SHALL BE SUBMITTED TO AND APPROVED BY THE DSA BEFORE PROCEEDING WITH THE REPAIR WORK.

THIS IS A NEW BUILDING WITH NO DETERIORATION.

IDENTIFICATION STAMP
DIV. OF THE STATE ARCHITECT
APP: 02-123433 INC:
REVIEWED FOR
SS ☑ FLS ☑ ACS ☑
DATE: 01/20/2026

ARCHITECHNICA

555 West Benjamin Holt Drive, Suite 423
Stockton, California 95207
P: (209) 952-5850
F: (209) 952-2442
E: hello@architechnica.net

www.architechnica.net

LICENSED ARCHITECT
TIMOTHY L. DEARBORN
C-29928
RENEWAL 12 / 2027
STATE OF CALIFORNIA

© 2026 ARCHITECHNICA

CONSULTANT

ERMA B REESE ELEMENTARY

1800 W ELM ST,
LODI, CA 95242

LODI UNIFIED SCHOOL DISTRICT

REVISIONS

PROJECT NO: 2025-03
ISSUE SET: CD
ISSUE DATE: 12/11/2025
DRAWN BY: HD

COVER SHEET

G0.0

C:\Users\haya\Documents\Revit_2023\2025-03_Erma B Reese_Bridged Portables_ORIGINAL Ramp_hayaNRD3T.rvt

1/14/2026 9:12:38 AM

SYMBOLS LEGEND

BUILDING SECTION

1 / A101
- DIRECTION OF VIEW
- SECTION LETTER/NUMBER
- SHEET ON WHICH SECTION IS DRAWN

DRAWING TITLE

1 View Name 1/8" = 1'-0"
- LETTER/NUMBER OF PLAN, SECTION, EXTERIOR ELEVATION, GROUP OF INTERIOR ELEVATIONS
- SCALE

WALL SECTION

1 / A101
- DIRECTION OF VIEW
- SECTION LETTER/NUMBER
- SHEET ON WHICH SECTION IS DRAWN

ROOM NUMBER

ROOM NAME / 101 / 150 SF
- ROOM NAME
- ROOM NUMBER
- ROOM AREA

EXTERIOR ELEVATION MARK

1 / A101
- DIRECTION OF VIEW
- ELEVATION LETTER/NUMBER
- SHEET ON WHICH ELEVATION IS DRAWN

GRID LINES

A
- GRID LETTER/NUMBER
- MAJOR DIMENSION POINT

INTERIOR ELEVATION MARK

A1 / A4 / A101 / A2 / A3
- ELEVATION LETTER/NUMBER
- DIRECTION OF VIEW
- SHEET ON WHICH ELEVATION(S) IS DRAWN

TAGS

A	WINDOW / STOREFRONT MARK - SEE WINDOW SCHEDULE
101	DOOR NUMBER - SEE DOOR SCHEDULE
01	CABINET MARK - SEE MILLWORK SCHEDULE
A	TOILET RM ACCESSORY MARK - SEE ACCESSORY SCHEDULE
A	EQUIPMENT MARK - SEE EQUIPMENT SCHEDULE
MTRL	MATERIAL / FINISH MARK - SEE FINISH SCHEDULE
KEYNOTE ID	ID NOTE - SEE INDIVIDUAL SHEETS FOR DESCRIPTION

DETAIL MARK

1 / A101
- DETAIL LETTER/NUMBER
- SIM — INDICATES SIMILAR CONDITION TO REFERENCED DETAIL
- SHEET ON WHICH DETAIL IS DRAWN

- PROJECT NORTH
- TRUE NORTH (COMPASS NORTH)

STATEMENT OF GENERAL CONFORMANCE

(APPLICATION NO. 02-123433 FILE NO. 39-50)

[X] THE DRAWINGS OR SHEETS LISTED ON THE SHEET INDEX

[ ] THIS DRAWING, PAGE OF SPECIFICATIONS / CALCULATIONS

HAVE BEEN PREPARED BY OTHER DESIGN PROFESSIONALS OR CONSULTANTS WHO ARE LICENSED AND/OR AUTHORIZED TO PREPARE SUCH DRAWINGS IN THIS STATE. IT HAS BEEN EXAMINED BY ME FOR:

1. DESIGN INTENT AND APPEARS TO MEET THE APPROPRIATE REQUIREMENTS OF TITLE 24, CALIFORNIA CODE OF REGULATIONS AND THE PROJECT SPECIFICATIONS PREPARED BY ME, AND
2. COORDINATION WITH MY PLANS AND SPECIFICATIONS AND IS ACCEPTABLE FOR INCORPORATION INTO THE CONSTRUCTION OF THIS PROJECT.

THE STATEMENT OF GENERAL CONFORMANCE "SHALL NOT BE CONSTRUED AS RELIEVING ME OF MY RIGHTS, DUTIES, AND RESPONSIBILITIES UNDER SECTIONS 17302 AND 81138 OF THE EDUCATION CODE AND SECTIONS 4-336, 4-341, AND 4-344 OF TITLE 24, PART 1. (TITLE 24, PART 1, SECTION 4-317[b])

Signature — Date: 05/28/2025

ARCHITECT OR ENGINEER DESIGNATED TO BE IN GENERAL RESPONSIBLE CHARGE

TIMOTHY DEARBORN, AIA
Print Name

C-25928 — License Number
12 / 2027 — Expiration Date

DESIGN DATA

FOR USE BY THE DIVISION OF THE STATE ARCHITECT ERMA B REESE ELEMENTARY SCHOOL

(N) BRIDGE PORTABLE (UNIT 32)

DSA APP. NO. :	#02-123433 (THISAPP.)
OCCUPANCY GROUP:	E
CONSTRUCTION TYPE:	VB
FLOOR AREA:	960 SF
OVERHANGS:	177 SF
FIRE SPRINKLERED:	NO
TOTAL AREA	1,137 SF

ALLOWABLE HEIGHT (NON SPRINKLERED TYPE VB) = 40'
ACTUAL HEIGHT = 11'-9" - OK

ALLOWABLE AREA (E OCCUPANCY) = 9,500 SF
ACTUAL BUILDING AREA = 1,137 SF < 9,500 SF- OK

(E) AREA FRONTAGE MAINTAINED

ALLOWABLE AREA (E OCCUPANCY) = 9,500 SF
ALLOWABLE AREA WITH FRONTAGE INCREASE = 14,500 SF
SINGLE-OCCUPANCY, ONE-STORY BUILDINGS
Aa = At +(NS x If)
Aa = 9,500sf +(9,500sf x .5) = 14,250

ACTUAL BUILDING AREA = (E) 10,560 SF <14,250 SF - OK

DESIGN CRITERIA
ASCE
SNOW = 0 PSF

WIND
RISK CATEGORY = II
V = 93 MPH
Vasd = 72MPH

SEISMIC
RISK CATEGORY= II
SITE CLASS = D (DEFAULT)
Ss = 0.626
SDS = 0.542
SDC = D

SOIL BEARING CAPACITY: 1,000 PSF PER DRAWING A0.0

CLIMATE ZONE: 12

NOTE: ARCHITECT OF RECORD (AOR) SHALL CONTACT THE LOCAL FIRE DEPARTMENT AND/OR EMERGENCY COMMUNICATIONS AUTHORITY TO OBTAIN DESIGN AND EQUIPMENT SPECIFICATIONS, AND TESTING AND ACCEPTANCE CRITERIA. IT IS THE RESPONSIBILITY OF THE DESIGN PROFESSIONAL/AOR TO SUBMIT PLANS AND REQUESTED DOCUMENTATION, AND APPLICABLE FEES, TO THE LOCAL AUTHORITY HAVING JURISDICTION FOR REVIEW AND APPROCAL. UPON COMPLETION, COPIES OF THE APPROVED PLANS, EQUIPMENT DATA SHEETS AND PROOF OF TESTING AND ACCEPTANCE DOCUMENTATION SHALL BE PROVIDED TO THE SCHOOL DISTRICT. THE PROJECT INSPECTORS SHALL VERIFY THAT DOCUMENTATION IS PROVIDED TO THE SCHOOL DISTRICTS

SHEET INDEX

GENERAL
G0.0 COVER SHEET
G0.1 ABBREVIATIONS, DESIGN DATA, SYMBOL LEGEND & SHEET INDEX
G1.1 LOCAL FIRE AUTHORITY REVIEW SITE PLAN
G1.2 ACCESSIBILITY REVIEW SITE PLAN

CIVIL
C0.0 GENERAL NOTES AND ABBREVIATIONS
C0.1 TOPOGRAPHIC SURVEY
C1.1 DEMOLITION PLAN
C2.1 GRADING AND PAVING PLAN
C3.1 DETAILS

ARCHITECTURAL
AA1.1 ENLARGED SITE PLAN - DEMO
AA1.2 ENLARGED SITE PLAN - PROPOSED
AA1.3 ENLARGED SITE PLAN - DEMO PROPOSED ENTRANCE
AA1.4 ENLARGED SITE PLAN - DEMO PROPOSED PARKING
AA1.5 SITE DETAILS
AA1.8 ACCESSIBILITY DETAILS
AA2.0 RESTROOM FLOOR PLAN AND INTERIOR ELEVATIONS
AA2.1 BRIDGE PORTABLE FOUNDATION PLAN
AA2.2 BRIDGE PORTABLE FLOOR PLAN
AA2.3 BRIDGE PORTABLE SECTIONS
AA2.4 BRIDGE PORTABLE EXTERIOR ELEVATIONS

ELECTRICAL
ES0.1 GENERAL NOTES, LEGEND, STRUCTURAL SAFETY NOTES
ES0.2 CONSTRUCTION DETAILS
ES0.3 FIRE ALARM DETAILS
ES1.1 PLAN
ES1.2 EGRESS PATHWAY LIGHTING
ES2.1 SIGNAL PLANS
ET24 COMPLIANCE

MECHANICAL
M1.0 PELICAN EMS DETAILS

PLUMBING
PP2.0 PLUMBING DEMO AND REMODEL FLOOR PLANS, SCHEDULES, AND DETAILS

PC DRAWINGS - COVER (# 04-123059)
A0.0 COVER SHEET
A0.0.1 PROJECT OPTIONS SCHEDULE
A0.1 TYPICAL KEY PLAN AND SCHEDULES, GEN NOTES,
A0.2 SIGNAGE AND SYMBOLS
A0.4 DSA-103 T & I PLYWOOD FLOORS
A0.5 CAL GREEN SPEC'S
A0.6 CAL GREEN CHECKLIST
A0.7 CAL GREEN CHECKLIST
A0.8 CAL GREEN CHECKLIST

PC DRAWINGS - ARCHITECTURAL (# 04-123059)
A1.0 24X40 FLOOR PLAN
A2.1(B) ARCHITECTURAL WUI DETAILS (WOOD FRAMING SHTG FINISH)
A2.7 WUI NOTES AND CRITERIA
A2.9 ARCHITECTURAL DETAILS (FLOOR)
A3.0.1 FIRE SEPARATION & PENETRATION DETAILS

SHEET INDEX

A3.2 RCP
A3.2.1 CEILING NOTES
A3.3 CEILING DETAILS (T-GRID)
A4.0.1 ROOF PLAN MONO SLOPE (STANDING SEAM)
A4.1 ROOF DETAILS (STANDING SEAM)
A5.0 SIDEWALL ELEVATION
A5.1 ENDWALL ELEVATIONS
A5.2 INTERIOR ELEVATIONS
A6.0 SECTION - STANDING SEAM (MONO)
A6.2 PC 2022 CBC
A7.2 ADDITIONAL OPTION DETAILS

PC DRAWINGS - ELECTRICAL (# 04-123059)
E0.1 GENERAL NOTES
E1.0 PLAN 24X40
E1.1 SCHEDULE 24X40

PC DRAWINGS - MECHANICAL (# 04-123059)
M0.1 GENERAL NOTES
M0.2 MISCELLANEOUS NOTES & DETAILS
M2.9 24'X40' T24 CZ 14 (WALL AC)
M2.10 24'X40' T24 CZ 14 (WALL AC)
M2.11 24'X40' T24 CZ 15 (WALL AC)
M2.12 24'X40' T24 CZ 15 (WALL AC)
M2.13 24'X40' T24 CZ 16 (WALL AC)
M2.14 24'X40' T24 CZ 16 (WALL AC)
M3.3 ENVELOPE & NOTES
M5.1 MECHANICAL CEILING PLAN 24X40

PC DRAWINGS - FOUNDATION (# 04-123059)
F1.10 WOOD FOUNDATION NOTES SCHED FOR BLDG W/50+15
F1.11 WOOD FOUNDATION PLAN 24x40 BLDG W/ 50+15
F1.40 WOOD FOUNDATION DETAILS

PC DRAWINGS - STRUCTURAL (# 04-123059)
S0.1 STRUCTURAL GEN NOTES
S1.0.4 WD SHTH'G FLR FRAMING PLAN CROSS-STRAP OPT.
S1.2 STRUCTURAL DETAILS (FLOOR)
S3.0.3 MONO SLOPE ROOF FRM'G PLAN CROSS-STRAP OPT.
S3.1 STRUCTURAL DETAILS (ROOF)
S3.3 ROOF PERIMETER TRUSS
S4.1 WD WALL FRAMING ELEVATIONS
S4.2 WALL DETAILS (WOOD FRAMING)
S4.4 TYP FRAMING
S4.5 FRAMING SCHEDULES
S5.0 LONG. SECTION - (MONO)

PC DRAWINGS - RAMP (# 04-123059)
SR0 MODULE PLAN AND NOTES (COVER SHEET)
SR1 RAMP AND LANDING PLAN
SR2 RAMP AND LANDING FRAMING
SR3 FOUNDATION PLAN
SR4 RAMP AND LANDING/STAIR FRAMING ELEVATION
SR5 RAMP DETAILS
SR6 RAMP DETAILS
SR7 STAIR CONN
SHEET COUNT: 89

National Flood Hazard Layer FIRMette

ARCHITECTURAL ABBREVIATIONS

@	AT
#	NUMBER
°	DEGREE(S)
Ø	DIAMETER
[A]	
AB	ANCHOR BOLT
APPROX	APPROXIMATE
AP	ACCESS PANEL
ANOD	ANODIZE
ALUM	ALUMINUM
AGG	AGGREGATE
AFF	ABOVE FINISH FLOOR
ADJT	ADJUSTABLE
ADJ	ADJACENT
ADH	ADHESIVE
AD	AREA DRAIN
ACT	ACOUSTIC CEILING TILE
ACC	ACCESS
AC	AIR CONDITIONING
ABV	ABOVE
ARCH	ARCHITECT(URAL)
ASB	ASBESTOS
ASPH	ASPHALT
AUTO	AUTOMATIC
AVG	AVERAGE
[B]	
BEL	BELOW
BETWN	BETWEEN
BIT	BITUMINOUS
BJT	BEDJOINT
BLDG	BUILDING
BLK	BLOCK
BLKG	BLOCKING
BM	BENCH MARK
BOT	BOTTOM
BRG	BEARING
BRK	BRICK
BRZ	BRONZE
BSMT	BASEMENT
BUR	BUILT-UP-ROOF
BVL	BEVELED
BD	BOARD
[C]	
CAB	CABINET
CAD	CADMIUM
CB	CATCH BASIN
CEM	CEMENT
CER	CERAMIC
CFL	COUNTERFLASH
CFT	CUBIC FT
CHAM	CHAMFER
CHBD	CHALKBOARD
CHT	CEILING HEIGHT
CI	CAST IRON
CIR	CIRCLE
CJT	CONTROL JOINT
CLG	CEILING
CLR	CLEAR(ANCE)
CLS	CLOSURE
CMU	CONCRETE MASONRY UNIT
COL	COLUMN
COMB	COMBINATION
COMP	COMPARTMENT
COMPO	COMPOSITION
CONC	CONCRETE
CONST	CONSTRUCT(ION)
CONT	CONTINUOUS
CONTR	CONTRACT(OR)
CPT	CARPET
CR	CLASSROOM
CRC	COLD ROLLED CHANNEL
CSMT	CASEMENT
CT	CERAMIC TILE
CTR	COUNTER
CTSK	COUNTERSUNK
CYD	CUBIC YARD
[D]	
DA	DOUBLE ACTING
DEM	DEMOLITION
DF	DRINKING FOUNTAIN
DIA	DIAMETER
DH	DOUBLE HUNG
DIAG	DIAGONAL
DIM	DIMENSION
DIV	DIVISION
DL	DEAD LOAD
DP	DAMP-PROOFING
DR	DOOR
DS	DOWNSPOUT
DTL	DETAIL
DW	DUMPWATER
DWG	DRAWING
[E]	
E	EXISTING
E	EAST
EA	EACH
EF	EACH FACE
EJT	EXPANSION JOINT
EL	ELEVATION
ELEC	ELECTRIC
EMER	EMERGENCY
ENC	ENCLOSURE
EP	EDGE OF PAVING
EQ	EQUAL
EQPT	EQUIPMENT
EST	ESTIMATE
EWC	ELECTRIC WATER COOLER
EX	EXISTING
EXC	EXCAVATE
EXH	EXHAUST
EXIST'G	EXISTING
EXP	EXPOSED
EXT	EXTERIOR
[F]	
FA	FIRE ALARM
FASTN	FASTEN(ER)
FBD	FIBERBOARD
FD	FLOOR DRAIN
FE	FIRE EXTINGUISHER
FEC	FIRE EXTINGUISHER CABINET
FFL	FINISH FLOOR LINE
FGL	FIBERGLASS
FHMS	FLAT HEAD MACHINE SCREW
FHSTS	FLAT HEAD SELF-TAPPING SCREW
FHWS	FLAT HEAD WOOD SCREW
FIN	FINISH
FLG	FLASHING
FLOUR	FLOURESCENT
FLR	FLOOR(ING)
FND	FOUNDATION
FOC	FACE OF CONCRETE
FOF	FACE OF FINISH
FOS	FACE OF STUDS OR SHEATHING
FPL	FIREPLACE
FTG	FOOTING
FUT	FUTURE
[G]	
GA	GAGE, GAUGE
GALV	GALVANIZED
GB	GRAB BAR
GC	GENERAL CONTRACTOR
GI	GALVANIZED IRON
GKT	GASKET
GL	GLASS
GRD	GRADE, GRADING
GRND	GROUND
GVL	GRAVEL
GYPBD	GYPSUM BOARD
[H]	
HB	HOSE BIB
HBD	HARDBOARD
HC	HOLLOW CORE
HDR	HEADER
HDWD	HARDWOOD
HDWR	HARDWARE
HJT	HEAD JOINT
HOR	HORIZONTAL
HT	HEIGHT
HTG	HEATING
HVAC	HEATING, VENTILATING & AIR-CONDITION
HW	HOT WATER
[I]	
ID	INSIDE DIAMETER
INCIN	INCINERATOR
INCL	INCLUDE
INSUL	INSULATE, INSULATION
INT	INTERIOR
INTM	INTERMEDIATE
INV	INVERT
IP	IRON PIPE
[J]	
JAN	JANITOR
JST	JOIST
JT	JOINT
[K]	
KCPL	KEEN CEMENT PLASTER
KIT	KITCHEN
KO	KNOCKOUT
KPL	KICKPLATE
[L]	
LAB	LABORATORY
LAD	LADDER
LAM	LAMINATE
LAV	LAVATORY
LBL	LABEL
LH	LEFT HAND
LL	LIVE LOAD
LPT	LOW POINT
LT	LIGHT
LTWT	LIGHT WEIGHT
LTL	LINTEL
LVR	LOUVER
[M]	
MAX	MAXIMUM
MB	MACHINE BOLT
MBR	MEMBER
MC	MEDICINE CABINET
MDO	MEDIUM DENSITY OVERLAY
MECH	MECHANICAL
MED	MEDIUM
MET	METAL
MFR	MANUFACTURER
MH	MANHOLE
MIN	MINIMUM
MIR	MIRROR
MISC	MISCELLANEOUS
MLD	MOLDING
MO	MASONRY OPENING
MOD	MODULE, MODULAR
MT	MOUNT(ED)
MTFR	METAL FURRING
MTHR	METAL THRESHOLD
MTL	MATERIAL, METAL
MULL	MULLION
MWK	MILLWORK
[N]	
N	NORTH
NAT	NATURAL
NIC	NOT IN CONTRACT
NL	NAILABLE
NO	NUMBER
NRC	NOISE REDUCTION COEFFICIENT
NTS	NOT TO SCALE
[O]	
OC	ON CENTER
OA	OVERALL
OBS	OBSCURE
OD	OUTSIDE DIAMETER
OH	OVERHEAD
OHMS	OVAL HEAD MACHINE SCREW
OHWS	OVAL HEAD WOOD SCREW
OLF	OCCUPANCY LOAD FACTOR
OPG	OPENING
OPH	OPPOSITE HAND
OPP	OPPOSITE
[P]	
PAR	PARALLEL
PB	PANIC BAR
PBD	PARTICLE BOARD
PCF	POUNDS PER CUBIC FOOT
PED	PEDESTAL
PERF	PERFORMANCE
PHWS	PHILIPS HEAD WOOD SCREW
PL	PROPERTY LINE, PLATE
PLAS	PLASTER
PLAS LAM	PLASTIC LAMINATE
PLF	POUNDS PER LINEAR FOOT
PLYWD	PLYWOOD
PNL	PANEL
PNT	PAINT
PRE-FIN	PREFINISHED
PROP	PROPERTY
PSF	POUNDS PER SQUARE FOOT
PSI	POUNDS PER SQUARE INCH
PT	POINT
PTDF	PRESSURE TREATED DOUGLAS FIR
PTN	PARTITION
PVC	POLY VINYL CHLORIDE
PVMT	PAVEMENT
[Q]	
QT	QUART
QUAN	QUANTITY
[R]	
RA	RETURN AIR
RAD	RADIUS
RCF	REINFORCED CONCRETE FOOTING
RD	ROOF DRAIN
REF	REFERENCE
REFG	REFRIGERATOR
REG	REGISTER
REINF	REINFORCE
RET	RETURN
REV	REVISION, REVISE
RFG	ROOFING
RFL	REFLECTANT(IVE)
RH	RIGHT HAND
RHWS	ROUND HEAD WOOD SCREW
RM	ROOM
RO	ROUGH OPENING
ROW	RIGHT OF WAY
RWD	REDWOOD
RWL	RAIN WATER LEADER
RR	RESTROOM
[S]	
S	SOUTH
SC	SOLID CORE
SCHED	SCHEDULE
SD	STORM DRAIN
SECT	SECTION
SER	SERVICE
SH	SHELF
SHT	SHEET
SHTG	SHEATHING
SIM	SIMILAR
SPEC	SPECIFICATION
SPKR	SPEAKER
SQ	SQUARE
SS	SERVICE SINK
SST	STAINLESS STEEL
ST	STEEL
STD	STANDARD
STG	SEATING
STOR	STORAGE
STRUCT	STRUCTURAL
SUSP	SUSPENDED
SYM	SYMBOL
SYN	SYNTHETIC
SYS	SYSTEM
[T]	
TOC	TOP OF CONCRETE
TOP	TOP OF PAVING
TP	TOILET PARTITION
T&G	TOUNGUE AND GROOVE
TEL	TELEPHONE
TER	TERMINAL
THK	THICK(NESS)
THRES	THRESHOLD
TKBD	TACKBOARD
TOPO	TOPOGRAPHICAL
TRANS	TRANSOM
TYP	TYPICAL
TO	TOP OF
[U]	
UC	UNDERCUT
UNFIN	UNFINISHED
UR	URINAL
[V]	
VJ	VERTICAL JOINT
VAR	VARNISH
VCT	VINYL COMPOSITION TILE
VEN	VENEER
VERT	VERTICAL
VF	VINYL FABRIC
VFTW	VINYL FABRIC TACK WALL
VG	VERTICAL GRAIN
VGDF	VERTICAL GRAIN DOUGLAS FIR
VT	VINYL TILE
[W]	
W	WEST
WAINS	WAINSCOT
WC	WATER CLOSET
WD	WOOD
WF	WIDE FLANGE
WGLS	WIRE GLASS
WH	WALL HUNG, WATER HEATER
W/	WITH
WI	WROUGHT IRON
WIN	WINDOW
WO	WITHOUT
WP	WEATHER PROOF
WR	WEATHER RESISTANT
WT	WEIGHT
WWF	WELDED WIRE FABRIC

IDENTIFICATION STAMP
DIV. OF THE STATE ARCHITECT
APP: 02-123433 INC:
REVIEWED FOR
SS ☑ FLS ☑ ACS ☑
DATE: 01/20/2026

ARCHITECHNICA
555 West Benjamin Holt Drive, Suite 423
Stockton, California 95207
P: (209) 952-5850
F: (209) 952-2442
E: hello@architechnica.net
www.architechnica.net

LICENSED ARCHITECT — TIMOTHY L. DEARBORN — C-25928 — RENEWAL 12 / 2027 — STATE OF CALIFORNIA

© 2026 ARCHITECHNICA

CONSULTANT

ROADRUNNERS — ERMA B. REESE ELEMENTARY

ERMA B REESE ELEMENTARY

1800 W ELM ST,
LODI, CA 95242

LODI UNIFIED SCHOOL DISTRICT

REVISIONS

PROJECT NO: 2025-03
ISSUE SET: CD
ISSUE DATE: 12/11/2025
DRAWN BY: HD

ABBREVIATIONS, DESIGN DATA, SYMBOL LEGEND & SHEET INDEX

G0.1

C:\Users\hayal\Documents\Revit_2023\2025-03_Erma B Reese_Bridged Portables_ORIGINAL Ramp_hayaNRD3T.rvt
1/14/2026 9:12:39 AM

DSA 810

FIRE & LIFE SAFETY SITE CONDITIONS SUBMITTAL

Division of the State Architect (DSA) documents referenced within this publication are available on the DSA Forms or DSA Publications webpages.

To facilitate the Division of the State Architect's (DSA) fire and life safety plan review of project site conditions, DSA requires the design professional to provide the following information at time of project submittal for projects consisting of construction of a new campus, construction of new building(s), additions to existing buildings, and for site alternate design means for fire department emergency vehicle access, and fire suppression water supply.

Information associated with compliance items 1 through 3 below is to be provided for all project types indicated above. Information associated with items 4 through 7 is to be completed when an alternate means is utilized. Acknowledgement by the school district and signature from the Local Fire Authority (LFA) is only required when an alternate design means is being requested.

The Project Information and Fire & Life Safety Information sections are to be completed for all projects and imaged onto the fire access site plan. When an alternate design/means is proposed, all sections on pages 1 and 2 are to be completed and imaged on the fire access site plan.

For additional information refer to the instructions at the end of this form and DSA Policy *PL 09-01: Fire Flow for Buildings*.

PROJECT INFORMATION	
School District/Owner:	LODI UNIFIED SCHOOL DISTRICT
Project Name/School:	BRIDGE PORTABLES/ERMA REESE ELEMENTARY SCHOOL
Project Address:	1800 W ELM ST, LODI, CA 95242

FIRE & LIFE SAFETY INFORMATION				
1.	Has a fire hydrant flow test been performed within the past 12 months? *(If yes, provide a copy of the test data.)*	Yes ☑		No ☐
2.	Was the fire hydrant water flow test performed as part of this LFA review?	Yes ☑		No ☐
3.	Is the project located within a designated fire hazard severity zone (FHSZ) as established by Cal-Fire? *(If yes, indicate FHSZ classification below.)*	Yes ☐		No ☑
	Refer to the following website for FHSZ locations: http://egis.fire.ca.gov/FHSZ/	Moderate ☐	High ☐	Very High ☐
	Wildland Interface Area (WIFA) *(If any designations are checked, project design must meet the requirements of CBC Chapter 7A.)*			WIFA ☐

DSA 810
FIRE & LIFE SAFETY SITE CONDITIONS SUBMITTAL

CONDITION MEANS AND METHODS RESOLUTION		ALTERNATE ACCEPTED			
		Yes	No	N/A	N/R
4.	Emergency vehicle access roadways do not meet CFC requirements.				
4a.	**Acceptable Alternate:** Emergency vehicle and personnel access as proposed by the project architect is acceptable for providing fire suppression and protection of life and property.	✔			
5.	**Fire Hydrants:** Number and spacing does not meet CFC requirements.			✔	
5a.	**Acceptable Alternate:** Number of fire hydrants and spacing as proposed by the project architect is acceptable for fire suppression and protection of life and property.				
6.	**Fire Hydrants:** Water flow and pressure are less than CFC minimum.			✔	
6a.	**Acceptable Alternate:** The available flow and pressure is acceptable for providing fire suppression and protection of life and property.				
7.	Location of fire department connection(s) serving fire sprinkler systems or standpipe systems does not meet CFC requirements.			✔	
7a.	**Acceptable Alternate:** The location of fire department connection serving the fire sprinkler system and/or standpipe system is acceptable for providing fire suppression and protection of life and property.				

School District Acceptance of Acceptable Design Alternates

By signing this form, the school district acknowledges and accepts the proposed design as an alternative to California Building Code (CBC) and California Fire Code (CFC) minimum requirements, as indicated by one or more of the conditions indicated at items 4a, 5a, 6a or 7a, for providing fire and life safety protection of life and property.

Accepted by: John Title: Executive Director of Ops.

Signature: Edith Molbert Date: 6/2/25

LOCAL FIRE AUTHORITY (LFA) INFORMATION	
LFA Agency Name: Lodi Fire Department	
LFA Review Official: Tim Ortegel	
Title: Deputy Chief	Work Phone: (209) 333-5552
Work Email: tortegel@lodi.gov	

LFA Reviewer's Signature: Date: 05/28/25

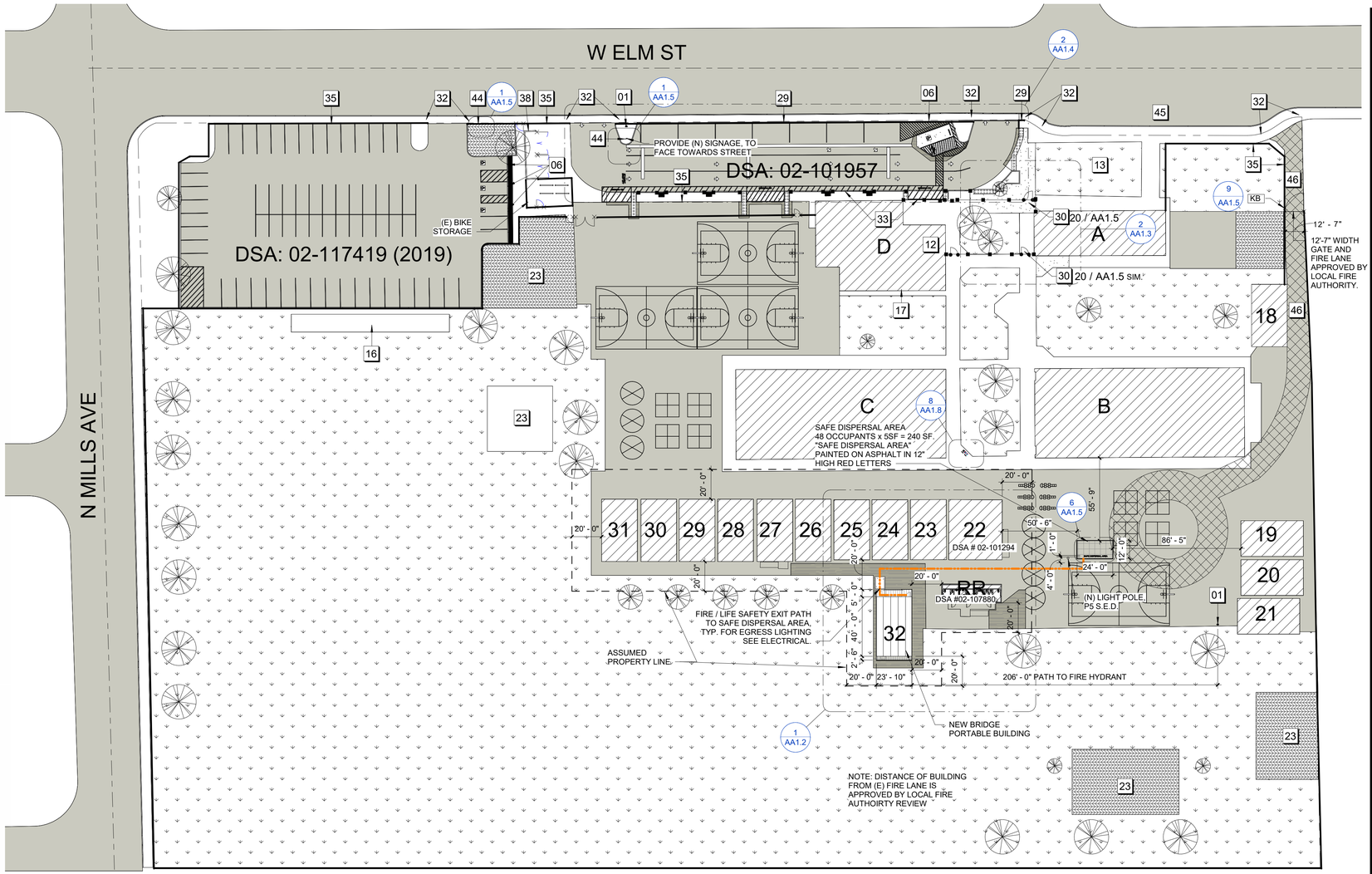

1 SITE PLAN - LOCAL FIRE AUTHORITY REVIEW
1" = 40'-0"

SITE PLAN NOTES - MASTER

1 - EXISTING

01	(E) FIRE HYDRANT
06	(E) ADA PARKING & SIGNAGE
12	(E) COVERED WALKS
13	(E) MONUMENT / SCHOOL SIGN
16	(E) STORAGE CONTAINERS
17	(E) EQUIPMENT FENCE ENCLOSURE
23	(E) PLAYGROUND STRUCTURE
29	(E) 4'-0"HIGH CHAINLINK FENCE
30	(E) SINGLE GATE W/ PANIC HARDWARE
32	(E) CURB CUT & ADA RAMP
33	(E) O.I. FENCE
35	(E) 6'-0" HIGH CHAIN LINK FENCE
38	(E) CMU WALL
44	(E) OFF STREET PARKING SIGNAGE
45	(E) BUS STUDENT DROP OFF
46	(E) FIRE ACCESS LANE
48	(E) SITE ARRIVAL POINT

BUILDING INFORMATION

BLDG. NAME	DSA APP. NO(S).	CONST. TYPE	SQ. FT.	FS	NON- FS	OCC.
UNIT A-OFFICE	58822 (1988)	VB	1,282 SF		X	B2
UNIT A-KINDERGARTEN		VB	1,327 SF			E
UNIT B-CLASSROOMS	02-101957 (2001)	VB	8,460 SF		X	E
UNIT C-MULTI-PURPOSE KITCHEN	61195 ()	V-1HOUR	4,456SF	X		A1
UNIT D-CLASSROOMS	02-101957 (2001)	VB	8,479 SF		X	E
UNIT 18-PORTABLE- WORK ROOM	46123 ()	VB	960 SF		X	E
UNIT 19-PORTABLE- CLASSROOM	46992 ()	VB	960 SF		X	E
UNIT 20-PORTABLE- CLASSROOM	68146 ()	VB	960 SF		X	E
UNIT 21-PORTABLE- CLASSROOM	02-101294 (2000)	VB	960 SF		X	E
UNIT 22-PORTABLE- CLASSROOM	02-101294 (2000)	VB	1,440 SF		X	E
UNIT 23-PORTABLE	49448 ()	VB	960 SF		X	E
UNIT 24-PORTABLE	46992 ()	VB	960 SF		X	E
UNIT 25-PORTABLE	02-101294 (2000)	VB	960 SF		X	E
UNIT 26-PORTABLE	02-101957 (2001)	VB	960 SF		X	E
UNIT 27-PORTABLE	02-101957 (2001)	VB	960 SF		X	E
UNIT 28-PORTABLE	02-107880 (2006)	VB	960 SF		X	E
UNIT 29-PORTABLE	02-107880 (2006)	VB	960 SF		X	E
UNIT 30-PORTABLE	02-107880 (2006)	VB	960 SF		X	E
UNIT 31-PORTABLE	02-107880 (2006)	VB	960 SF		X	E
UNIT RR-RESTROOM	02-107880 (2006)	VB	480 SF		X	E
(N) UNIT 32-PORTABLE	THIS APP: 02-123433	VB	960 SF		X	E

SITE LEGEND

- NEW BUILDINGS
- EXISTING BUILDINGS
- EXISTING TURF / GREEN AREA
- NEW TURF / GREEN AREA
- EXISTING SOIL / EARTH
- NEW ASPHALT
- EXISTING ASPHALT
- NEW CONCRETE
- EXISTING CONCRETE
- FIRE ACCESS LANE
- CHAIN LINK SINGLE GATE
- CHAIN LINK DOUBLE GATE
- TREE
- ORNAMENTAL METAL FENCE
- CHAIN LINK FENCE
- KB (N) 3200 SERIES KNOX BOX SEE DETAIL 9 / AA1.5
- SAFE DISPERSAL ROUTE

SEE G1.2 FOR FIRE FLOW RESULTS

IDENTIFICATION STAMP
DIV. OF THE STATE ARCHITECT
APP: 02-123433 INC:
REVIEWED FOR
SS ☑ FLS ☑ ACS ☑
DATE: 01/20/2026

ARCHITECHNICA
555 West Benjamin Holt Drive, Suite 423
Stockton, California 95207
P: (209) 952-5850
F: (209) 952-2442
E: hello@architechnica.net
www.architechnica.net

LICENSED ARCHITECT TIMOTHY L. DEARBORN C-29928 RENEWAL 12 / 2027 STATE OF CALIFORNIA

© 2026 ARCHITECHNICA

CONSULTANT

ROADRUNNERS ERMA B. REESE ELEMENTARY

ERMA B REESE ELEMENTARY

1800 W ELM ST,
LODI, CA 95242

LODI UNIFIED SCHOOL DISTRICT

REVISIONS

PROJECT NO: 2025-03
ISSUE SET: CD
ISSUE DATE: 12/11/2025
DRAWN BY: HD

LOCAL FIRE AUTHORITY REVIEW SITE PLAN

G1.1

C:\Users\hayal\Documents\Revit_20231\2025-03_Erma B Reese_Bridged Portables_ORIGINAL Ramp_hayaNRD3T.rvt
1/14/2026 9:12:42 AM

CITY OF LODI
FIRE DEPARTMENT
25 EAST PINE STREET
LODI, CALIFORNIA 95240

Est. 1907

Ken Johnson, Fire Chief

May 19, 2025

Lodi Unified School District
Facilities and Planning
880 N. Guild Ave.
Lodi, CA 95240

To: Whom it may concern

RE: HYDRANT FLOW TESTS

The Lodi Fire Department conducted Fire Hydrant Flow Test at the request of the Lodi Unified Facilities and Planning for the following Hydrants.

Results are as follows:

Beckman Elementary
Hydrant # S1786 – Scarborough Dr.

2 ½" orifice
Static Pressure – 61 psi
Residual Pressure - 50
GPM – 1319

Reese Elementary
Hydrant # K1359 – West side of Mills

2 ½" orifice
Static Pressure – 70 psi
Residual Pressure - 52
GPM – 1635

FIRE ADMINISTRATION (209) 333-6735
FIRE PREVENTION (209) 333-6739
FAX (209) 333-6844

Lawrence Elementary
Hydrant # 12083 – Stockton St

2 ½" orifice
Static Pressure – 60 psi
Residual Pressure – 46 psi
GPM – 1200

Thank you,

Timothy Ortegel
Deputy Chief
Lodi Fire Dept.
210 W Elm St
Lodi CA 95240

FIRE ADMINISTRATION (209) 333-6735
FIRE PREVENTION (209) 333-6739
FAX (209) 333-6844

SITE PLAN NOTES - MASTER

1 - EXISTING

01	(E) FIRE HYDRANT
06	(E) ADA PARKING & SIGNAGE
12	(E) COVERED WALKS
13	(E) MONUMENT / SCHOOL SIGN
16	(E) STORAGE CONTAINERS
17	(E) EQUIPMENT FENCE ENCLOSURE
23	(E) PLAYGROUND STRUCTURE
29	(E) 4'-0"HIGH CHAINLINK FENCE
30	(E) SINGLE GATE W/ PANIC HARDWARE
32	(E) CURB CUT & ADA RAMP
33	(E) O.I. FENCE
35	(E) 6'-0" HIGH CHAIN LINK FENCE
38	(E) CMU WALL
44	(E) OFF STREET PARKING SIGNAGE
45	(E) BUS STUDENT DROP OFF
46	(E) FIRE ACCESS LANE
48	(E) ACCESSIBLE DROP OFF LOCATION

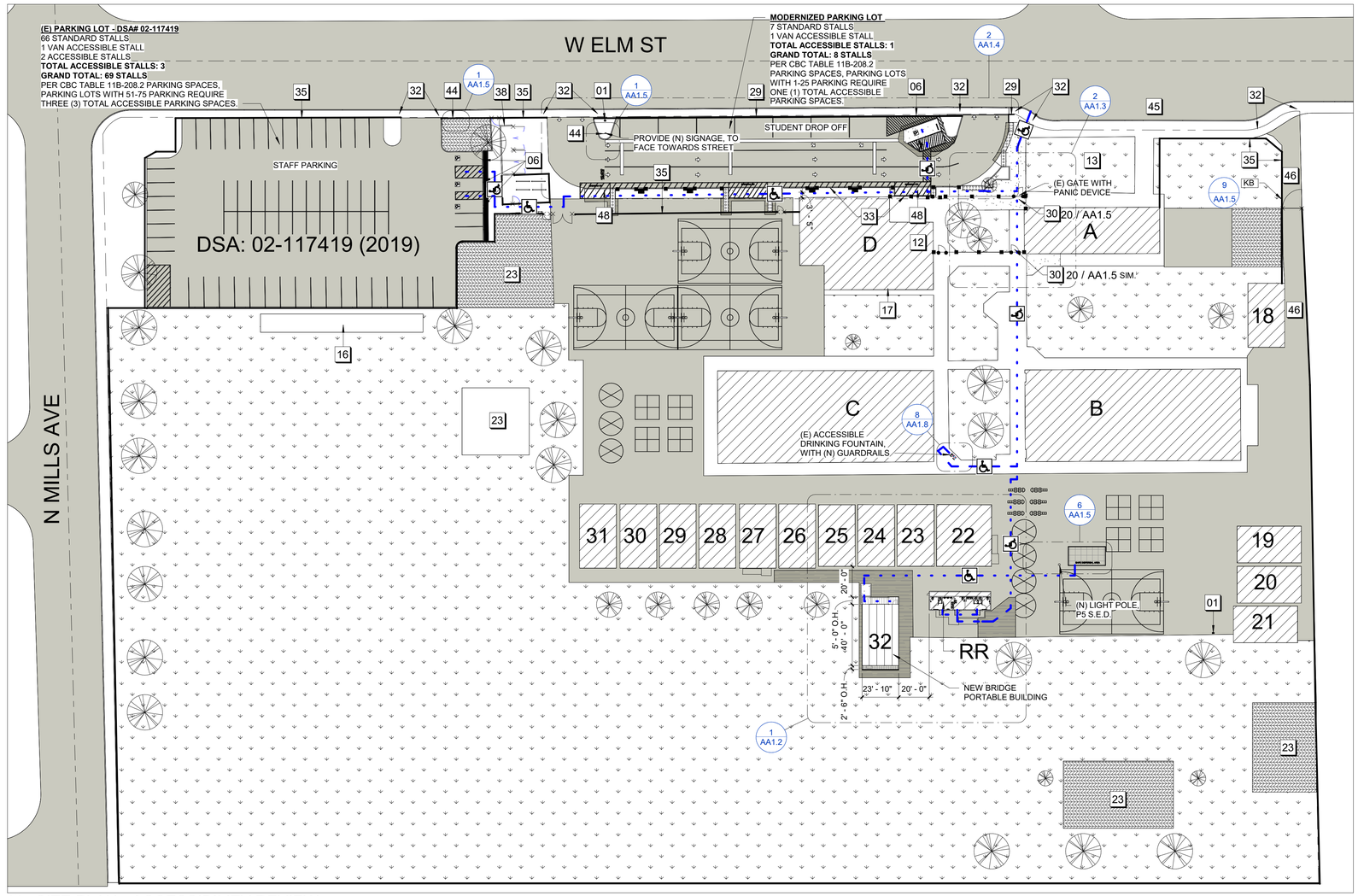

2 SITE PLAN - ACCESSIBILITY REVIEW
1" = 40'-0"

BUILDING INFORMATION

BLDG. NAME	DSA APP. NO(S).	CONST. TYPE	SQ. FT.	FS	NON- FS	OCC.
UNIT A-OFFICE	58822 (1988)	VB	1,282 SF		X	B2
UNIT A-KINDERGARTEN		VB	1,327 SF			E
UNIT B-CLASSROOMS	02-101957 (2001)	VB	8,460 SF		X	E
UNIT C-MULTI-PURPOSE KITCHEN	61195 ()	V-1HOUR	4,456SF	X		A1
UNIT D-CLASSROOMS	02-101957 (2001)	VB	8,479 SF		X	E
UNIT 18-PORTABLE- WORK ROOM	46123 ()	VB	960 SF		X	E
UNIT 19-PORTABLE- CLASSROOM	46992 ()	VB	960 SF		X	E
UNIT 20-PORTABLE- CLASSROOM	68146 ()	VB	960 SF		X	E
UNIT 21-PORTABLE- CLASSROOM	02-101294 (2000)	VB	960 SF		X	E
UNIT 22-PORTABLE- CLASSROOM	02-101294 (2000)	VB	1,440 SF		X	E
UNIT 23-PORTABLE	49448 ()	VB	960 SF		X	E
UNIT 24-PORTABLE	46992 ()	VB	960 SF		X	E
UNIT 25-PORTABLE	02-101294 (2000)	VB	960 SF		X	E
UNIT 26-PORTABLE	02-101957 (2001)	VB	960 SF		X	E
UNIT 27-PORTABLE	02-101957 (2001)	VB	960 SF		X	E
UNIT 28-PORTABLE	02-107880 (2006)	VB	960 SF		X	E
UNIT 29-PORTABLE	02-107880 (2006)	VB	960 SF		X	E
UNIT 30-PORTABLE	02-107880 (2006)	VB	960 SF		X	E
UNIT 31-PORTABLE	02-107880 (2006)	VB	960 SF		X	E
UNIT RR-RESTROOM	02-107880 (2006)	VB	480 SF		X	E
(N) UNIT 32-PORTABLE	THIS APP: 02-123433	VB	960 SF		X	E

SITE LEGEND

- NEW BUILDINGS
- EXISTING BUILDINGS
- EXISTING TURF / GREEN AREA
- NEW TURF / GREEN AREA
- EXISTING SOIL / EARTH
- NEW ASPHALT
- EXISTING ASPHALT
- NEW CONCRETE
- EXISTING CONCRETE
- FIRE ACCESS LANE
- CHAIN LINK SINGLE GATE
- CHAIN LINK DOUBLE GATE
- TREE
- ORNAMENTAL METAL FENCE
- CHAIN LINK FENCE
- KB (N) 3200 SERIES KNOX BOX SEE DETAIL 9 / AA1.5
- SAFE DISPERSAL ROUTE

PATH OF TRAVEL (POT) STATEMENT

DESIGN PROFESSIONAL IN GENERAL RESPONSIBLE CHARGE STATEMENT: THE POT IDENTIFIED IN THESE CONSTRUCTION DOCUMENTS MEETS THE REQUIREMENTS OF THE CURRENT APPLICABLE CALIFORNIA BUILDING CODE (CBC) ACCESSIBILITY PROVISIONS FOR **PATH OF TRAVEL REQUIREMENTS FOR ALTERATIONS, ADDITIONS AND STRUCTURAL REPAIRS**. AS PART OF THE DESIGN OF THIS PROJECT, THE POT WAS EXAMINED AND ANY ELEMENTS, COMPONENTS OR PORTIONS OF THE POT THAT WERE DETERMINED TO BE NONCOMPLIANT WITH THE CBC HAVE BEEN IDENTIFIED AND THE CORRECTIVE WORK NECESSARY TO BRING THEM INTO COMPLIANCE HAS BEEN INCLUDED WITHIN THE SCOPE OF THIS PROJECT'S WORK THROUGH DETAILS, DRAWINGS AND SPECIFICATIONS INCORPORATED INTO THESE CONSTRUCTION DOCUMENTS. ANY NONCOMPLIANT ELEMENTS, COMPONENTS OR PORTIONS OF THE POT THAT WILL NOT BE CORRECTED BY THIS PROJECT BASED ON VALUATION THRESHOLD LIMITATIONS OR A FINDING OF UNREASONABLE HARDSHIP ARE INDICATED IN THESE CONSTRUCTION DOCUMENTS.

DURING CONSTRUCTION, IF POT ITEMS WITHIN THE SCOPE OF THE PROJECT REPRESENTED AS CBC COMPLIANT ARE FOUND TO BE NONCONFORMING BEYOND REASONABLE CONSTRUCTION TOLERANCES, THE ITEMS SHALL BE BROUGHT INTO COMPLIANCE WITH THE CBC AS A PART OF THIS PROJECT BY MEANS OF A CONSTRUCTION CHANGE DOCUMENT.

ACCESSIBLE PATH OF TRAVEL:

ACCESSIBLE PATH OF TRAVEL AS INDICATED ON PLANS IS A BARRIER FREE ACCESS ROUTE WITHOUT ANY ABRUPT LEVEL CHANGES EXCEEDING 1/2" IF BEVELED AT 1:2 MAXIMUM SLOPE OR VERTICAL LEVEL CHANGES NOT EXCEEDING 1/4" MAXIMUM AND AT LEAST 48" IN WIDTH. SURFACE IS STABLE, FIRM AND SLIP RESISTANT. CROSS SLOPE DOES NOT EXCEED 2% AND SLOPE IN THE DIRECTION OF TRAVEL IS LESS THAN 5% UNLESS OTHERWISE INDICATED. ACCESSIBLE PATH OF TRAVEL SHALL BE MAINTAINED FREE OF OVERHANGING OBSTRUCTIONS TO 80" MINIMUM AND PROTRUDING OBJECTS GREATER THAN 4" PROJECTION FROM WALL ABOVE 27" AND LESS THAN 80". ARCHITECT SHALL VERIFY THAT THERE ARE NO BARRIERS IN THE PATH OF TRAVEL.

IDENTIFICATION STAMP
DIV. OF THE STATE ARCHITECT
APP: 02-123433 INC:
REVIEWED FOR
SS ☑ FLS ☑ ACS ☑
DATE: 01/20/2026

ARCHITECHNICA
555 West Benjamin Holt Drive, Suite 423
Stockton, California 95207
P: (209) 952-5850
F: (209) 952-2442
E: hello@architechnica.net
www.architechnica.net

LICENSED ARCHITECT
TIMOTHY L. DEARBORN
C-29928
RENEWAL 12 / 2027
STATE OF CALIFORNIA

© 2026 ARCHITECHNICA

CONSULTANT

ROADRUNNERS
ERMA B. REESE ELEMENTARY

ERMA B REESE ELEMENTARY

1800 W ELM ST,
LODI, CA 95242

LODI UNIFIED SCHOOL DISTRICT

REVISIONS

PROJECT NO: 2025-03
ISSUE SET: CD
ISSUE DATE: 12/11/2025
DRAWN BY: HD

ACCESSIBILITY REVIEW SITE PLAN

G1.2

C:\Users\hayal\Documents\Revit_2023\2025-03_Erma B Reese_Bridged Portables_ORIGINAL Ramp_hayaNRD3T.rvt

1/14/2026 9:12:50 AM

GENERAL NOTES

1. THE TYPES, LOCATIONS, SIZES, AND/OR DEPTHS OF EXISTING UNDERGROUND UTILITIES AS SHOWN ON THESE PLANS WERE OBTAINED FROM SOURCES OF VARYING RELIABILITY. THE CONTRACTOR IS CAUTIONED THAT ONLY ACTUAL EXCAVATION WILL REVEAL THE TYPES, EXTENT, SIZES, LOCATIONS AND DEPTHS OF SUCH UNDERGROUND UTILITIES. A REASONABLE EFFORT HAS BEEN MADE TO LOCATE AND DELINEATE ALL KNOWN UNDERGROUND UTILITIES. HOWEVER, WARREN CONSULTING ENGINEERS CAN ASSUME NO RESPONSIBILITY FOR THE COMPLETENESS OR ACCURACY OF ITS DELINEATION OF SUCH UNDERGROUND UTILITIES, NOR FOR THE EXISTENCE OF OTHER BURIED OBJECTS OR UTILITIES WHICH MAY BE ENCOUNTERED BUT WHICH ARE NOT SHOWN ON THESE PLANS. THE CONTRACTOR OR ANY SUBCONTRACTOR FOR THIS CONTRACT SHALL NOTIFY MEMBERS OF UNDERGROUND SERVICE ALERT (USA) TWO (2) WORKING DAYS IN ADVANCE OF PERFORMING ANY EXCAVATION WORK BY CALLING TOLL FREE 1-800-227-2600, OR 811.

811 Know what's below. Call before you dig.

2. WARREN CONSULTING ENGINEERS, INC. (WCE) ASSUMES NO RESPONSIBILITY FOR ERRORS IN PHYSICAL LOCATION OF IMPROVEMENTS, HORIZONTAL OR VERTICAL, IF STAKED BY OTHERS. IN ADDITION, ANY SUCH ERRORS IN PHYSICAL LOCATION MAY AFFECT THE INTENDED DESIGN OF SUCH IMPROVEMENTS AND WCE CANNOT BE HELD RESPONSIBLE FOR SUCH CONDITIONS WHICH ARE A RESULT OF ERRORS IN SURVEYING, OR IMPROPER CONSTRUCTION.

3. IF SUBSURFACE CULTURAL RESOURCES, REMAINS, AND/OR ARTIFACTS ARE UNCOVERED DURING PROJECT CONSTRUCTION, ALL WORK IN THE VICINITY SHALL BE STOPPED UNTIL SUCH ITEMS CAN BE ASSESSED BY AN APPROPRIATE MEMBER OF THE COUNTY ENVIRONMENTAL IMPACT SECTION STAFF.

4. CONTRACTOR AGREES THAT HE/SHE SHALL ASSUME SOLE AND COMPLETE RESPONSIBILITY FOR JOB SITE CONDITIONS DURING THE COURSE OF CONSTRUCTION OF THIS PROJECT, INCLUDING SAFETY OF ALL PERSONS AND PROPERTY: THAT THIS REQUIREMENT SHALL APPLY CONTINUOUSLY AND SHALL NOT BE LIMITED TO NORMAL WORKING HOURS: AND THAT THE CONTRACTOR SHALL DEFEND, INDEMNIFY AND HOLD THE OWNER AND ENGINEER HARMLESS FROM ANY AND ALL LIABILITY, REAL OR ALLEGED, IN CONNECTION WITH THE PERFORMANCE OF WORK ON THIS PROJECT, EXCEPTING FOR LIABILITY ARISING FROM THE SOLE NEGLIGENCE OF THE OWNER OR ENGINEER.

5. THE CONTRACTOR SHALL OBTAIN AN EXCAVATION PERMIT FROM THE STATE OF CALIFORNIA DEPARTMENT OF INDUSTRIAL SAFETY FOR ALL EXCAVATIONS OF 5 FEET OR MORE IN DEPTH.

6. IT SHALL BE THE CONTRACTOR'S RESPONSIBILITY TO MAKE ALL NECESSARY PRE-BID AND PRE-CONSTRUCTION SITE INSPECTION, AND/OR OBSERVATIONS ON THE SITE TO PRE-DETERMINE ALL HIS/HER MEANS AND METHODS NECESSARY TO COMPLETE THE IMPROVEMENTS SHOWN ON THESE PLANS AND PER THE PROJECT SPECIFICATIONS. IT IS THE CONTRACTORS RESPONSIBILITY TO DETERMINE, AND INCLUDE IN HIS/HER CONTRACT, ALL MEANS AND METHODS NECESSARY TO PERFORM A COMPLETE AND ACCEPTABLE JOB.

7. WHERE IMPROVEMENTS LIE WITHIN AN EXISTING DEVELOPED AREA, CONTRACTOR SHALL USE CAUTION WHEN ACCESSING THE SITE THROUGH THESE EXISTING IMPROVEMENTS. IT IS THE CONTRACTORS RESPONSIBILITY TO PROTECT ANY SUCH EXISTING IMPROVEMENTS OUTSIDE THE PROJECT BOUNDARY, OR EXISTING IMPROVEMENTS WITHIN THE BOUNDARY WHICH ARE TO REMAIN. PROPER PRECAUTIONS SHALL BE PROVIDED AND MAINTAINED THROUGHOUT CONSTRUCTION. ANY DAMAGE SHALL BE REPAIRED OR REPLACED TO THE SATISFACTION OF THE OWNER.

8. IT IS THE RESPONSIBILITY OF THE CONTRACTOR TO KEEP DETAILED RECORDS OF MINOR CHANGES OR ADJUSTMENTS MADE DURING CONSTRUCTION (WHICH WERE NOT FORMALLY ISSUED). UPON PROJECT COMPLETION, THESE RECORDS AND/OR INFORMATION SHALL BE PROVIDED TO THE OWNER AND WARREN CONSULTING ENGINEERS, INC. UNLESS AN OFFICIAL "AS-BUILT" SET OF PLANS IS A REQUIREMENT OF THE CONTRACT. IF AS-BUILT PLANS ARE A REQUIREMENT OF THE CONTRACT, REFER TO SPECIFICATIONS FOR AS-BUILT DELIVERABLE REQUIREMENTS.

9. IN VEHICULAR PATHWAYS, EXISTING ASPHALTIC AND/OR CONCRETE SURFACES SHALL BE CUT TO A NEAT AND STRAIGHT LINE, PARALLEL OR PERPENDICULAR TO THE VEHICULAR TRAVELED PATH. THIS IS TYPICALLY THE ROADWAY CENTERLINE, BUT MAY VARY. THAT SAWCUT EDGE SHALL BE PROTECTED FROM DAMAGE DURING CONSTRUCTION SO A CLEAN EDGE REMAINS FOR PATCH BACK.. IF EDGE IS DAMAGED, A NEW SAW CUT WILL BE REQUIRED. THE EXPOSED EDGE SHALL BE "TACKED" WITH EMULSION PRIOR TO PAVING.

10. NO BURNING OR BLASTING SHALL BE ALLOWED ONSITE UNLESS SPECIFICALLY ADDRESSED ON PLANS, OR SPECIFICALLY APPROVED AND COORDINATED WITH THE ARCHITECT, ENGINEER, AND LOCAL AGENCY OR OTHER ADMINISTRATIVE AUTHORITY.

11. SUBGRADE AND RESULTING FINISHED GRADE SHALL BE CONSTRUCTED SMOOTH AND UNIFORM BETWEEN SPOT ELEVATIONS, CONTOURS OR OTHER STRUCTURE ELEVATIONS SHOWN ON GRADING OR OTHER PLANS. NO MOUNDS, RUTS, DEPRESSIONS OR OTHER GRADING DEFICIENCIES WILL BE ALLOWED UNLESS SPECIFICALLY SHOWN ON PLANS.

12. ON NEW WATER SYSTEMS, SERVICE LATERALS SHALL BE MADE USING APPROPRIATE "TEE" AND "WYE" FITTINGS. SADDLE TAPS WILL ONLY BE ALLOWED WHEN MAKING CONNECTIONS TO EXISTING WATER MAINS.

13. CURING COMPOUND SHALL BE APPLIED IN A CONTINUOUS SOLID WET FLOWING COAT. ANY "SPOTTY" APPLICATIONS SHALL BE RECOATED IMMEDIATELY. APPLICATION SHALL BE INSPECTED BY PROJECT INSPECTOR DURING APPLICATION.

14. EMBEDMENT OF FEATURES IN CONCRETE PAVING, CURBS, OR WALLS, SUCH AS SQUARE OR ROUND TUBING, POSTS, OR COLUMNS, STEEL BOLTED PLATES, OR OTHER STRUCTURES, SHALL REQUIRE ADDITIONAL SCORE OR EXPANSION JOINTS TO PREVENT UNCONTROLLED CRACKING. THOSE ADDITIONAL JOINTS MAY OR MAY NOT BE SPECIFICALLY SHOWN ON PLANS BUT SHALL BE PROVIDED BY THE CONTRACTOR.

15. EMBEDMENT OF FEATURES IN CONCRETE PAVING, CURBS, OR WALLS, SUCH AS SQUARE OR ROUND TUBING, POSTS, OR COLUMNS, STEEL BOLTED PLATES, OR OTHER STRUCTURES, SHALL REQUIRE A MINOR ADJUSTMENT OF REBAR WITHIN CONCRETE TO ALLOW FOR SUCH STRUCTURE. THAT REBAR ADJUSTMENT MAY NOT BE SPECIFICALLY SHOWN ON PLANS.

16. NO MORE THAN 1 GALLON OF WATER PER YARD OF CONCRETE CAN BE ADDED TO THE TRUCK AFTER ARRIVAL TO PROJECT SITE. THE ADDITION OF WATER CAN ONLY BE ADDED UNDER THE SUPERVISION OF THE CONCRETE INSPECTOR OR LABORATORY TECHNICIAN.

17. WHEN PUMPING CONCRETE FOR PLACEMENT, ABSOLUTELY NO WATER IS TO BE ADDED TO PUMP HOPPER. ANY WATER ADDED TO HOPPER WILL BE REASON FOR CONCRETE REJECTION AT THE CONTRACTORS EXPENSE.

18. ALL CONTRACTION/CONSTRUCTION JOINTS "CJ" SHALL BE 1/4 THE SLAB THICKNESS DEEP, BUT NO LESS THAN 1" FOR CONTROLLING OF CRACKING. CONTRACTOR SHALL EXERCISE CAUTION WHEN FINAL TROWELING OF CONCRETE SO AS NOT TO FILL IN THESE JOINTS WITH CONCRETE CREAM. ANY CRACKS OUTSIDE OF JOINTS WHICH WERE CONSTRUCTED LESS THAN 1" DEEP, SHALL BE CAUSE FOR CONCRETE SLAB(S) TO BE REMOVED AND REPLACE AT CONTRACTORS EXPENSE.

19. ANY SCREED BOARDS SET WITHIN CONCRETE SLABS SHALL BE AN "OVERHEAD SCREED" SO THERE IS NO INTERFERENCE WITH THE PLACEMENT AND ALIGNMENT OF SLAB REINFORCING.

20. 3-1/2" FELT JOINTS WILL NOT BE ACCEPTED. PROVIDE A FULL 4" FELT JOINT FOR 4" SLAB CONSTRUCTION, AND A 6" FELT JOINT FOR A 6" SLAB SLAB CONSTRUCTION.

21. SHOULD ANY SHRINKAGE CRACKS OCCUR OUTSIDE OF EITHER THE EXPANSION JOINTS OR CRACK CONTROL JOINTS, THEN THE CONCRETE SLAB SHALL BE SAWCUT AT THE NEAREST JOINTS ON EACH SIDE OF THE CRACK AND THE CONCRETE SECTION SHALL BE, REMOVED AND REPLACED. NEW CONCRETE SHALL BE DOWELED INTO EXISTING CONCRETE PER DRAWING DETAIL.

22. ALL AREAS DISTURBED BY GRADING OPERATIONS WHETHER SHOWN ON THE DRAWINGS OR NOT SHALL BE HYDRO SEEDED UNLESS OTHERWISE NOTED. HYDRO SEEDING SHALL CONFORM TO LOCAL CITY/COUNTY STANDARDS.

23. REPAIR OR PATCHING OF GALVANIZED METALS, SUCH AS AFTER WELDING GALVANIZED COMPONENTS, SHALL BE MADE USING A ZINC COMPOSITION "HOT STICK" APPLICATION PER ASTM A 780-01. GALVANIZING PAINTS WILL NOT BE ALLOWED.

GENERAL PAVING SURFACE NOTES

1. PROVIDE EQUIVALENT OF MEDIUM BROOM FINISH AT SLOPES UP TO 5.99%, TYPICAL. PROVIDE EQUIVALENT OF HEAVY BROOM FINISH AT SLOPES 6% AND GREATER. REFER TO SPECIFICATIONS.

2. ALL NEW PEDESTRIAN WALKWAYS (NON-RAMP) SHALL BE SLOPED NO GREATER THAN 2.0%, AND NO LESS THAN 0.75% IN ANY DIRECTION, UNLESS SPECIFICALLY LABELED OTHERWISE. ALL CONCRETE SHALL MEET THE FOLLOWING SLOPE REQUIREMENTS:
   - NO GREATER THAN 5% SLOPE IN THE DIRECTION OF TRAVEL.
   - NO GREATER THAN 2% SLOPE CROSSING THE DIRECTION OF TRAVEL.
   - NO GREATER THAN 2% SLOPE IN ANY DIRECTION IN COURTYARD OR PLAZA AREAS AND AT DOOR LANDINGS.

DEMOLITION GENERAL NOTES

1. IN THE EVENT THAT ANY UNUSUAL CONDITIONS NOT COVERED BY THE GEOTECHNICAL INVESTIGATION REPORT OR ARE ENCOUNTERED DURING GRADING OPERATIONS THE GEOTECHNICAL ENGINEER AND THE ARCHITECT SHALL BE IMMEDIATELY NOTIFIED FOR DIRECTIONS.

2. NO BURNING OR BLASTING SHALL BE PERMITTED.

3. ADDITIONAL DEMOLITION INFORMATION MAY BE SHOWN ON THE GRADING, DRAINAGE, AND UTILITY PLANS, AND THOSE PLANS PREPARED BY OTHER DISCIPLINES FOR THIS PROJECT.

4. ALL DEMOLISHED ITEMS SHALL BE DISPOSED OF OFFSITE AT A SUITABLE, LEGAL, DUMP SITE OR OTHER FACILITY.

5. ALL DISPOSED OF MATERIALS SHALL BE RECYCLED IF POSSIBLE.

6. THE TYPES, LOCATIONS, SIZES AND/OR DEPTHS OF EXISTING UNDERGROUND UTILITIES AS SHOWN IN THESE PLANS WERE OBTAINED FROM SOURCES OF VARYING RELIABILITY. THE CONTRACTOR IS CAUTIONED THAT ONLY ACTUAL EXCAVATION WILL REVEAL THE TYPES, EXTENT, SIZES, LOCATIONS, AND DEPTHS OF SUCH UNDERGROUND UTILITIES. A REASONABLE EFFORT HAS BEEN MADE TO LOCATE AND DELINEATE ALL KNOWN UNDERGROUND UTILITIES. HOWEVER, WARREN CONSULTING ENGINEERS CAN ASSUME NO RESPONSIBILITY FOR THE COMPLETENESS OR ACCURACY OF ITS DELINEATION OF SUCH UNDERGROUND UTILITIES, NOR FOR THE EXISTENCE OF OTHER BURIED OBJECTS OR UTILITIES WHICH MAY BE ENCOUNTERED BUT WHICH ARE NOT SHOWN ON THESE DRAWINGS. THE CONTRACTOR OR ANY SUBCONTRACTOR FOR THIS CONTRACT SHALL NOTIFY THE DISTRICT TWO (2) WORKING DAYS IN ADVANCE OF PERFORMING ANY EXCAVATION WORK IN ORDER TO VERIFY TO THE GREATEST EXTENT POSSIBLE THE EXISTING UTILITY LINES, CONFLICTS AND PROPOSED UTILITY CONNECTION POINTS.

7. THE SCHOOL DISTRICT SHALL HAVE SALVAGE RIGHTS TO ANY DEMOLISHED ITEMS SHOWN HEREON. THE CONTRACTOR SHALL GIVE THE DISTRICT NOTICE 7 DAYS PRIOR TO THE START OF DEMOLITION. THE DISTRICT SHALL MOVE ANY RETAINED ITEMS OUT OF THE CONTRACTORS WORK AREA, UNLESS ANOTHER ARRANGEMENT IS MADE WITH THE CONTRACTOR. ANY REMAINING ITEMS BECOME THE PROPERTY OF THE CONTRACTOR AND SHALL BE REMOVED FROM THE SITE. ANY ITEMS NOT SHOWN FOR REMOVAL SHALL REMAIN AND SHALL BE PROTECTED FROM DAMAGE DURING CONSTRUCTION TO A REASONABLE EXTEND.

8. EXISTING UTILITY STRUCTURES IN AREAS OF NEW PAVING SHALL BE REMOVED AND REPLACED WITH NEW BOX/COVER AT NEW GRADE UNLESS SPECIFICALLY NOTED OTHERWISE.

9. ITEMS OUTSIDE THE LIMITS OF DEMOLITION SHALL REMAIN AND BE PROTECTED FROM DAMAGE DURING CONSTRUCTION.

10. EXISTING UTILITY STRUCTURES AND PIPING NOT SHOWN ON DEMOLITION PLAN TO BE REMOVED SHALL REMAIN AND BE PROTECTED.

CIVIL ABBREVIATIONS AND LEGEND

ABBREVIATIONS

NOTE: NOT ALL ABBREVIATIONS MAY BE USED ON THESE PLANS.

AB	AGGREGATE BASE
AC	ASPHALTIC CONCRETE
AD	AREA DRAIN
APN	ASSESSOR'S PARCEL NUMBER
ARV	AIR RELEASE VALVE
ASB	AGGREGATE SUB-BASE
BO	BLOW-OFF VALVE
BV	BUTTERFLY VALVE
BW	BACK OF WALK
C/L	CENTERLINE
CB	CATCH BASIN
CL	CLASS
CMP	CORRUGATED METAL PIPE
CATV	CABLE TELEVISION
CO	CLEANOUT
COMM	COMMUNICATION
CONC.	CONCRETE
CONST.	CONSTRUCT
CR	CURB RETURN
CS	CONCRETE SURFACE
DC	DOUBLE CHECK VALVE
DDC	DOUBLE DETECTOR CHECK VALVE
DG	DECOMPOSED GRANITE
DI	DROP INLET
DIA	DIAMETER
DIP	DUCTILE IRON PIPE
DWG	DRAWING
DS	DOWNSPOUT
E	ELECTRIC
EP	EDGE OF PAVEMENT
ESMT	EASEMENT
EX	EXISTING
FS	FIRE SERVICE LINE
FDC	FIRE DEPARTMENT CONNECTION
FL	FLOWLINE
FM	SANITARY SEWER FORCE MAIN
FF	FINISHED FLOOR ELEVATION
FH	FIRE HYDRANT
G	GAS
GR	GRATE ELEVATION
GRD	GRADE ELEVATION
GV	GATE VALVE
HB	HOSE BIBB
HBD	HEADER BOARD
HDPE	HIGH DENSITY POLYETHYLENE PIPE
HP	HIGH POINT
INV	PIPE INVERT ELEVATION
JP	JOINT UTILITY POLE
LF	LINEAL FEET
LIP	LIP OF GUTTER
LT	LEFT
MS	MOWSTRIP
NTS	NOT TO SCALE
OH	OVERHEAD
PCC	PORTLAND CEMENT CONCRETE
PD	PLANTER DRAIN
PIV	POST INDICATOR VALVE
P/L	PROPERTY LINE
PP	POWER POLE
PUE	PUBLIC UTILITY EASEMENT
PVC	POLYVINYL CHLORIDE
RCP	REINFORCED CONCRETE PIPE
R	RADIUS
RIM	MANHOLE RIM ELEVATION (SOLID COVER)
RP	REDUCED PRESSURE BACKFLOW PREVENTER
RW	RIGHT OF WAY
SCH	SCHEDULE
SD	STORM DRAIN
SDMH	STORM DRAIN MANHOLE
SG	SUBGRADE ELEVATION
SS	SANITARY SEWER
SSMH	SANITARY SEWER MANHOLE
STD	STANDARD
S/W	SIDEWALK
T	TELEPHONE
TC	TOP OF CURB
TD	TRENCH DRAIN
TDCB	TRENCH DRAIN CATCH BASIN
TP	TELEPHONE POLE
TRW	TOP OF RETAINING WALL
TSW	TOP OF SEAT WALL
TW	TOP OF WALK ELEVATION
U	UTILITY
UG	UNDERGROUND
UON	UNLESS OTHERWISE NOTED
VCP	VITRIFIED CLAY PIPE
W	WATER
W/	WITH
W/O	WITHOUT
WV	WATER VALVE

LEGEND

NOTE: NOT ALL SYMBOLS MAY BE USED ON THESE PLANS.

PROPOSED GRADING & DRAINAGE SYMBOLS:

8" SD	STORM DRAIN LINE (SIZE AND FLOW SHOWN)
	STORM DRAIN MANHOLE (SDMH)
	CATCH BASIN (CB)
	DROP INLET (DI)
	AREA DRAIN (AD)
	PLANTER DRAIN (PD) OR FLOOR DRAIN (FD)
CO	STORM DRAIN CLEANOUT
99.99	ELEVATION
FF=100.00	FINISHED FLOOR ELEVATION
PAD=99.33	BUILDING PAD ELEVATION
	CONCRETE SIDEWALK
	GRADED DIRECTION FOR DRAINAGE FLOW
	SWALE
	SLOPE
	TREE TO BE REMOVED
	RETAINING WALL

PROPOSED SANITARY SEWER SYMBOLS:

6" SS	SANITARY SEWER LINE (SIZE AND FLOW SHOWN)
	SANITARY SEWER MANHOLE (SSMH)
CO	SEWER CLEANOUT FLUSHER BRANCH

PROPOSED WATER SYMBOLS:

8" W	WATER LINE & SIZE
8" FS	FIRE LINE & SIZE
8" DW	DOMESTIC WATER LINE & SIZE
8" RW	RECLAIMED WATER LINE & SIZE
8" IRR	IRRIGATION SERVICE LINE & SIZE
8" NP	NON POTABLE WATER LINE & SIZE
8" SP	FIRE SPRINKLER SERVICE LINE & SIZE
	GATE VALVE
M	WATER METER
FH	FIRE HYDRANT ASSEMBLY
FDC	FIRE DEPARTMENT CONNECTION
DC	DETECTOR CHECK VALVE
DDC	DOUBLE DETECTOR CHECK VALVE
RP	REDUCED PRESSURE BACKFLOW PREVENTER
	BUTTERFLY VALVE
1"	AIR RELEASE VALVE + SIZE
1"	BLOW-OFF VALVE + SIZE
PIV	POST INDICATOR VALVE

CONCRETE SAWCUT NOTE

SAWCUTS AND SUBSEQUENT PATCH BACK OF CONCRETE WALKS, SHALL BE TO THE EXISTING CONCRETE JOINT BEYOND THE NEAREST LOCATION OF DEMOLITION AS SHOWN. A REASONABLE EFFORT HAS BEEN MADE TO LOCATE, SHOW AND COORDINATE WITH EXISTING JOINTS, HOWEVER IF FIELD CONDITIONS ARE OTHERWISE, IT IS UNDERSTOOD TO REMOVE AND PATCH BACK TO THE NEAREST JOINTS BEYOND DEMOLITION.

UTILITY VERIFICATION NOTE

PRIOR TO THE START OF CONSTRUCTION, LOCATE AND POTHOLE ALL UTILITY POINTS OF CONNECTION FOR LOCATION, DEPTH, AND SIZE. IF CONFLICT IS FOUND, CONTACT THE ENGINEER IMMEDIATELY FOR DIRECTION.

CIVIL SHEET INDEX

C0.0	CIVIL GENERAL NOTES AND ABBREVIATIONS
C0.1	TOPOGRAPHIC SURVEY
C1.1	DEMOLITION PLAN
C2.1	GRADING & PAVING PLAN
C3.1	DETAILS

IDENTIFICATION STAMP
DIV. OF THE STATE ARCHITECT
APP: 02-123433 INC: A
REVIEWED FOR
SS ☑ FLS ☑ ACS ☑
DATE: 01/20/2026

ARCHITECTNICA
555 West Benjamin Holt Drive, Suite 423
Stockton, California 95207
P: (209) 952-5850
F: (209) 952-2442
E: hello@architechnica.net
www.architechnica.net

LICENSED ARCHITECT — TIMOTHY L. DEARBORN — C-29928 — RENEWAL 12 / 2027 — STATE OF CALIFORNIA

© 2026 ARCHITECTNICA

REGISTERED PROFESSIONAL ENGINEER — ANTHONY J. TASSANO — NO. C74696 — STATE OF CALIFORNIA

WCE
WARREN CONSULTING ENGINEERS, INC.
1117 WINDFIELD WAY, SUITE 110
EL DORADO HILLS, CA 95762 | (916) 985-1870
CONSULTANT

ROADRUNNERS — ERMA B. REESE ELEMENTARY

ERMA B. REESE ELEMENTARY

1800 W ELM ST,
LODI, CA 95242

LODI UNIFIED SCHOOL DISTRICT

REVISIONS

PROJECT NO: 2025-03
ISSUE SET: DSA
ISSUE DATE: 03/16/26
DRAWN BY: JlmS

CIVIL GENERAL NOTES AND ABBREVIATIONS

C0.0

FILENAME: I:\25-037\CIVIL\DWG\25-037-C0.0.DWG PLOTTED: Friday, January 09, 2026

EXISTING TOPOGRAPHY

- = PROPERTY LINE
- = CENTERLINE
- = EASEMENT
- = PROPERTY CORNER FOUND AS NOTED
- = PROPERTY CORNER NOTHING FOUND OR SET
- 123 = TEMPORARY BENCHMARK (SEE TBM LIST FOR INFO)
- = SWALE OR DRAINAGE FLOW
- = DRAINAGE FLOW
- = FENCE (TYPE NOTED)
- = TREE (SIZE/TYPE INDICATED)
- = SLOPE
- 100 = CONTOUR
- = CONCRETE SURFACE
- = EDGE OF ASPHALT
- = EDGE OF BUILDING
- = SIGN
- = POST OR BOLLARD
- 99.9 = GROUND ELEVATION
- 99.99 = HARD SURFACE ELEVATION

EXISTING UTILITIES

- 12"SD = STORM DRAIN LINE (SIZE & DIRECTION OF FLOW)
- 12"SD = STORM DRAIN LINE (RECORD INFORMATION)
- 12"SD = STORM DRAIN LINE (UNDERGROUND LOCATING)
- SD = STORM DRAIN MANHOLE
- = STORM DRAIN CLEANOUT
- = DROP INLET
- = AREA DRAIN
- RWL = RAIN WATER LEADER
- DS = DOWNSPOUT
- 12"SS = SANITARY SEWER LINE (SIZE & DIRECTION OF FLOW)
- 12"SS = SANITARY SEWER LINE (RECORD INFORMATION)
- 12"SS = SANITARY SEWER LINE (UNDERGROUND LOCATING)
- SS = SANITARY SEWER MANHOLE
- = SANITARY SEWER CLEANOUT
- W = WATER LINE (SIZE INDICATED)
- W = WATER LINE (RECORD INFORMATION)
- W = WATER LINE (UNDERGROUND LOCATING)
- W = WATER MANHOLE
- = WATER VALVE
- = WATER METER
- = WATER BOX
- = IRRIGATION CONTROL VALVE
- = FIRE HYDRANT
- = BACKFLOW PREVENTER
- = SPRINKLER
- = HOSE BIBB
- OH-E = OVERHEAD ELECTRIC LINE
- E = UNDERGROUND ELECTRIC LINE
- E = UNDERGROUND ELECTRIC LINE (RECORD INFORMATION)
- E = UNDERGROUND ELECTRIC LINE (UNDERGROUND LOCATING)
- E = ELECTRIC MANHOLE
- = UTILITY POLE (WITH GUY WIRE)
- = ELECTRIC METER
- = ELECTRIC BOX
- = STREET LIGHTING BOX
- OR = LIGHT STANDARD
- = SIGNAL LIGHT
- = FLOOD LIGHT
- = ELECTRICAL OUTLET
- G = GAS LINE (SIZE INDICATED)
- G = GAS LINE (RECORD INFORMATION)
- G = GAS LINE (UNDERGROUND LOCATING)
- G = GAS MANHOLE
- = GAS VALVE
- = GAS METER
- t = TELEPHONE LINE
- t = TELEPHONE LINE (RECORD INFORMATION)
- t = TELEPHONE LINE (UNDERGROUND LOCATING)
- = STORM DRAIN BOX
- = TRAFFIC SIGNAL BOX

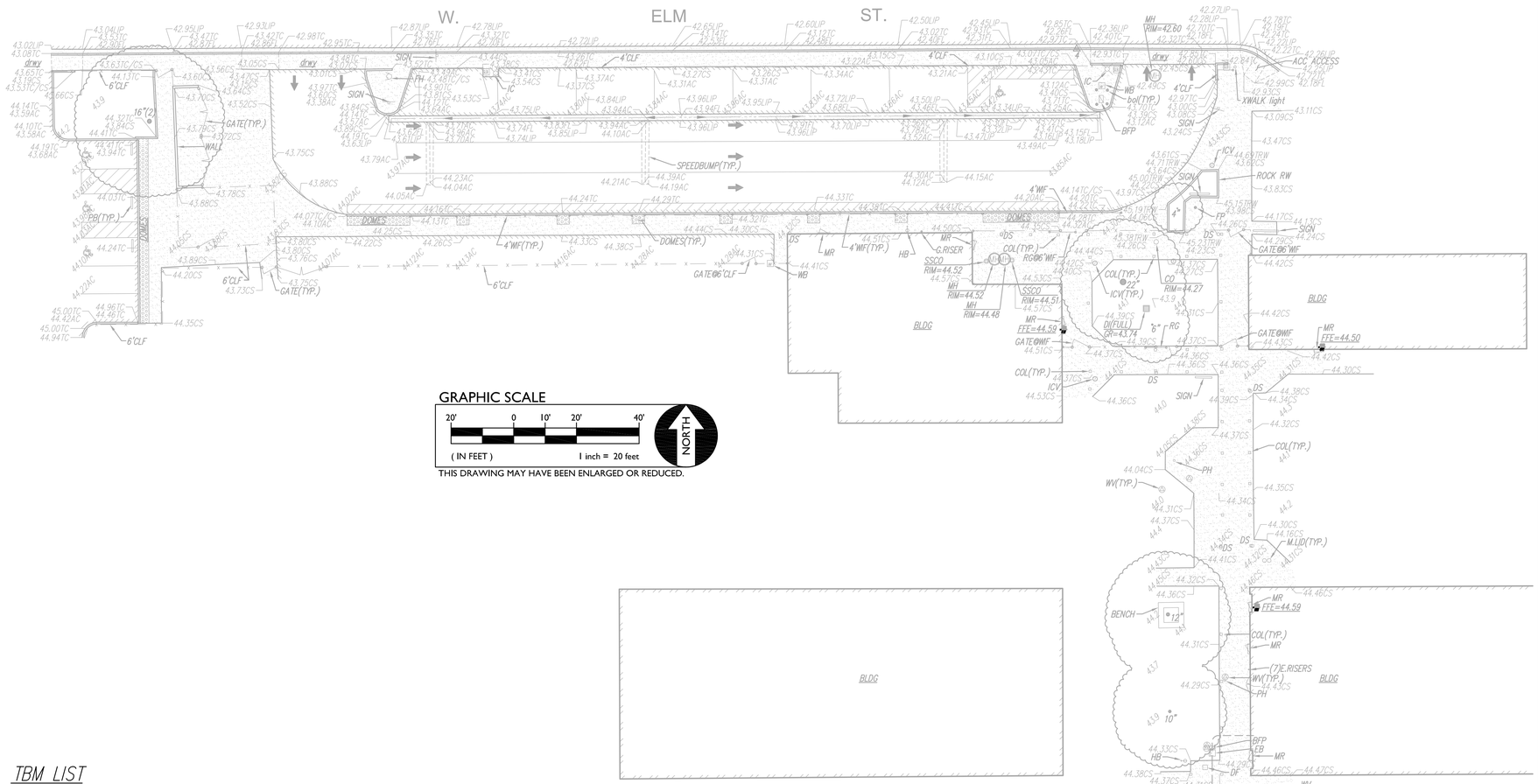

GRAPHIC SCALE

20' 0 10' 20' 40'

(IN FEET) 1 inch = 20 feet

NORTH

THIS DRAWING MAY HAVE BEEN ENLARGED OR REDUCED.

TBM LIST

NUMBER	DESCRIPTION	NORTHING	EASTING	ELEVATION
4	CPS CHISELED "+"	5091.92	5366.48	42.86
10	CPS CHISELED "+"	4852.08	5395.03	44.36
14	CPS CHISELED "+"	5071.59	5009.52	43.88

A.P.N.	035-110-170
BENCHMARK NO. 1207	ELEV. 43.328

SW COR ELM ST. AND MILLS AVE., 10.2' W/ CL OF CURB RETURN ON ELM ST., 0.5' BEHIND BOC.

ABBREVIATIONS

NOTE: NOT ALL ABBREVIATIONS MAY BE USED ON THESE PLANS.

AC	ASPHALTIC CONCRETE	DI	DROP INLET	INV	PIPE INVERT ELEVATION	RWL	RAIN WATER LEADER
ACC	ACCESSIBLE	DRWY	DRIVEWAY	IRR	IRRIGATION	SB	SIGNAL BOX
ACU	AIR CONDITIONING UNIT	DS	DOWNSPOUT	JP	JOINT UTILITY POLE	SD	STORM DRAIN
AD	AREA DRAIN	DWG	DRAWING	JT	JOINT TRENCH	SDMH	STORM DRAIN MANHOLE
APN	ASSESSOR'S PARCEL NUMBER	E	ELECTRIC	LNDG	LANDING	SIG	SIGNAL
APP	APPARATUS	EB	ELECTRICAL BOX	LVE	LOW VOLTAGE ELECTRIC	SL	STREET LIGHT
ARV	AIR RELEASE VALVE	ESMT	EASEMENT	M.	METAL	SLB	STREET LIGHT BOX
BBALL	BASKETBALL POLE	FA	FIRE ALARM	MH	MANHOLE	SS	SANITARY SEWER
BCM	BRASS CAP MONUMENT	FB	FIRE BOX	MR	METAL RAMP	SSCO	SANITARY SEWER CLEANOUT
BFP	BACK FLOW PREVENTER	FDC	FIRE DEPARTMENT CONNECTION	MS	MOW STRIP	SSMH	SANITARY SEWER MANHOLE
BL	BLOCK	FFE	FINISHED FLOOR ELEVATION	MSC	METAL STORAGE CONTAINER	ST	STUMP
BLDG	BUILDING	FH	FIRE HYDRANT	MU	MULTIPLE	STL.	STEEL
BOL	BOLLARD	FL	FLOWLINE	OH	OVERHEAD	T	TELEPHONE
BOV	BLOW-OFF VALVE	FO	FIBER OPTIC	OHANG	OVERHANG	TB	TELEPHONE BOX
BR.	BRICK	FP	FLAGPOLE	OIP	OPEN IRON PIPE	TBALL	TETHER BALL POLE
BWF	BARBED WIRE FENCE	FS	FIRE SERVICE	P	PINE	TBM	TEMPORARY BENCHMARK
C	COMMUNICATION	G	GAS	PA	PLANTER AREA	TC	TOP OF CURB
CAB	CABINET	GB	GRADE BREAK	PB	PARKING BUMPER	TD	TRENCH DRAIN
CATV	CABLE TELEVISION	GD	GARAGE DOOR	PED	PEDESTAL	TP	TELEPHONE POLE
CB	COMMUNICATIONS BOX	GR	GRATE	PH	POSTHOLE	TRW	TOP OF RETAINING WALL
CIP	CAPPED IRON PIPE	GRB	GROUND ROD BOX	PIV	POST INDICATOR VALVE	UG	UNDERGROUND
C/L	CENTERLINE	GROD	GROUND ROD	P/L	PROPERTY LINE	UNK	UNKNOWN
CLF	CHAIN LINK FENCE	GST	GATE STOP	PP	POWER POLE	V	VENT
CO	CLEANOUT	GV	GAS VALVE	PRI	PER RECORD INFORMATION	VBALL	VOLLEYBALL
COL	COLUMN	H	HYDRONICS	PUE	PUBLIC UTILITY EASEMENT	W	WATER
CONC.	CONCRETE	HB	HOSE BIBB	PV	PAVERS	W/	WITH
COND.	CONDENSATE	HBB	HOSE BIBB BOX	PVC	POLYVINYL CHLORIDE	WB	WATER BOX
CPF	CONTROL POINT FOUND	HBD	HEADER BOARD	R	RUBBER	WD.	WOOD
CPS	CONTROL POINT SET	HP	HIGH PRESSURE	RG	ROLLING GATE	WF	WOOD FENCE
CS	CONCRETE SURFACE	HR	HANDRAIL	RIM	MANHOLE RIM ELEVATION	WIF	WROUGHT IRON FENCE
DF	DRINKING FOUNTAIN	HVE	HIGH VOLTAGE ELECTRIC	ROW	RIGHT OF WAY	WRF	WOOD RAIL FENCE
DG	DECOMPOSED GRANITE	HWF	HOG WIRE FENCE	RR	RUBBER RAMP	XF	TRANSFORMER
		IC	IN CONCRETE	RW	RETAINING WALL	XWALK	CROSSWALK
		ICP	IRRIGATION CONTROL PANEL	RWD	REDWOOD TREE	YD	YARD DRAIN
		ICV	IRRIGATION CONTROL VALVE				

BASIS OF BEARINGS:
ASSUMED

F.E.M.A. INFORMATION:
THE SUBJECT PROPERTY IS LOCATED IN "ZONE X (SHADED)--0.2% ANNUAL CHANCE FLOOD HAZARD" PER FLOOD INSURANCE RATE MAP 06077C0168F DATED OCTOBER 16, 2009.

NOTE:
EXISTING UTILITIES BASED ON VISIBLE SURFACE STRUCTURES AND RECORD INFORMATION.

FILENAME:I:\25-037\CIVIL\DWG\25-037-C0.1.DWG PLOTTED:Friday, January 09, 2026

IDENTIFICATION STAMP
DIV. OF THE STATE ARCHITECT
APP: 02-123433 INC:
REVIEWED FOR
SS ☑ FLS ☑ ACS ☑
DATE: 01/20/2026

ARCHITECHNICA
555 West Benjamin Holt Drive, Suite 423
Stockton, California 95207
P: (209) 952-5850
F: (209) 952-2442
E: hello@architechnica.net
www.architechnica.net

LICENSED ARCHITECT TIMOTHY L. DEARBORN C-29928 RENEWAL 12 / 2027 STATE OF CALIFORNIA

© 2026 ARCHITECHNICA

REGISTERED PROFESSIONAL ENGINEER ANTHONY J. TASSANO NO. C74696 CIVIL STATE OF CALIFORNIA

WCE
WARREN CONSULTING ENGINEERS, INC.
1117 WINDFIELD WAY, SUITE 110
EL DORADO HILLS, CA 95762 | (916) 985-1870
CONSULTANT

ROADRUNNERS ERMA B. REESE ELEMENTARY

ERMA B. REESE ELEMENTARY

1800 W ELM ST,
LODI, CA 95242

LODI UNIFIED SCHOOL DISTRICT

REVISIONS		

PROJECT NO: 2025-03
ISSUE SET: DSA
ISSUE DATE: 03/16/26
DRAWN BY: JlmS

TOPOGRAPHIC SURVEY

C0.1

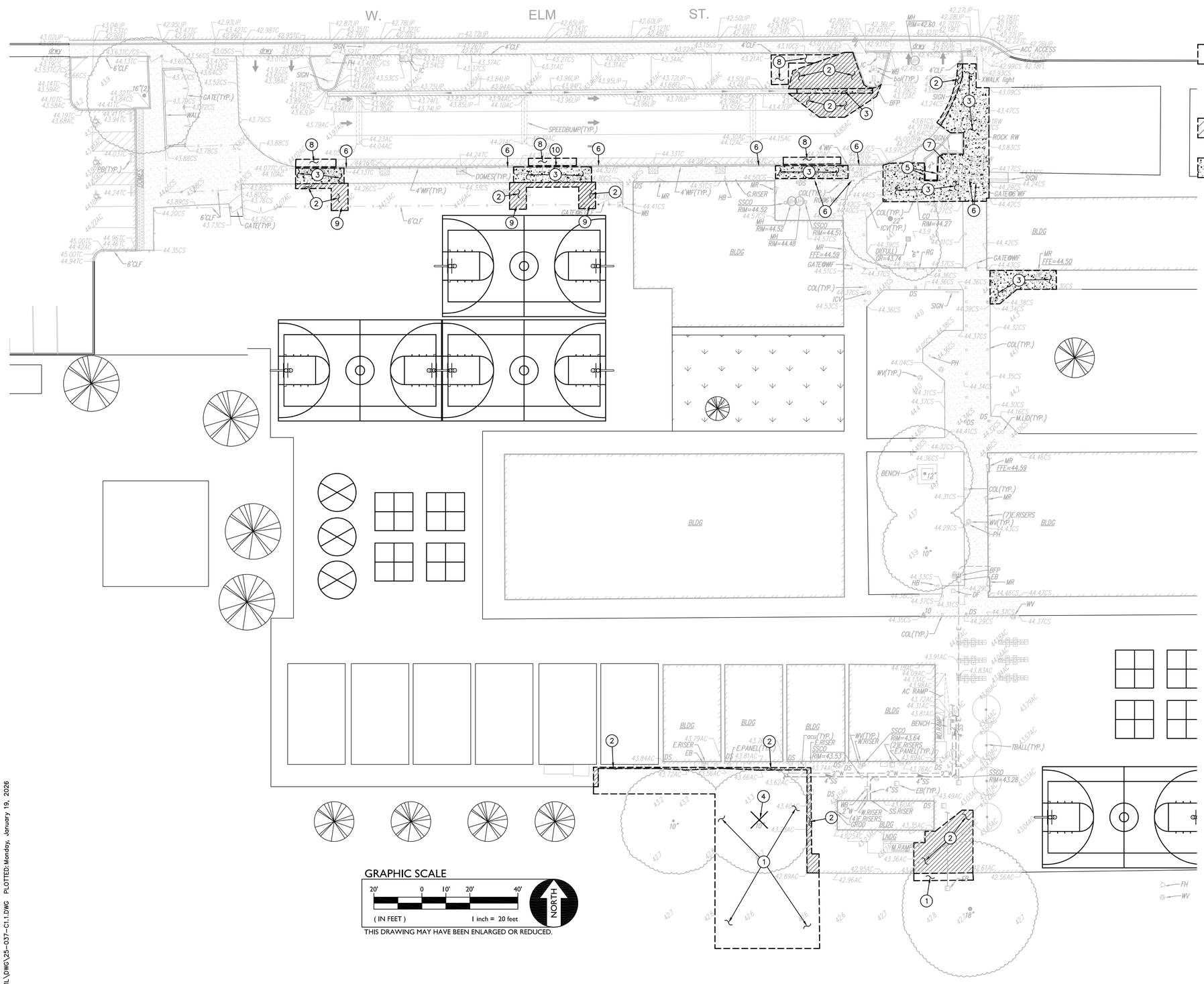

DEMOLITION NOTES

1. REMOVE AND DISPOSE OF TURF/VEGETATION AS REQUIRED TO ALLOW FOR PROPOSED CONSTRUCTION. IRRIGATION PIPING AND SPRINKLER HEADS IN CONFLICT WITH PROPOSED CONSTRUCTION SHALL BE REMOVED AND REPLACED OUTSIDE OF NEW WORK TO ALLOW FOR CONTINUED COVERAGE OF TURF. PATCH BACK TURF AREAS DAMAGED/REMOVED FOR CONSTRUCTION WITH NEW SOD AND/OR MULCH TO MATCH EXISTING CONDITIONS.
2. SAWCUT, REMOVE AND DISPOSE OF EXISTING ASPHALT PAVING AND AGGREGATE BASE TO LIMITS SHOWN. SAWCUT SHALL BE TO NEAT, STRAIGHT LINE, AND BE MAINTAINED THROUGHOUT CONSTRUCTION.
3. REMOVE EXISTING CONCRETE PAVING AND AGGREGATE BASE. WHERE SAWCUTS ARE NECESSARY, THEY SHALL BE A NEAT STRAIGHT LINE. CUT SHALL BE MADE AT NEAREST EXISTING JOINT TO LOCATION SHOWN.
4. REMOVE AND DISPOSE OF EXISTING TREE, TRUNK AND ROOTS.
5. REMOVE EXISTING ROCK WALL. SALVAGE ENOUGH ROCKS TO REBUILD NEW ROCK WALL SECTION. DISPOSE OF EXCESS ROCK AND EXISTING MORTAR.
6. SAVE AND PROTECT IN PLACE EXISTING WROUGHT IRON FENCE AND GATE.
7. SAVE AND PROTECT IN PLACE EXISTING FLAG POLE.
8. PLACE 2 COATS OF BLACK TRAFFIC PAINT OVER EXISTING STRIPING.
9. REMOVE CHAIN LINK FENCE FABRIC AS NECESSARY TO PERFORM NEW WORK. REINSTALL CHAIN LINK FABRIC UPON COMPLETION OF WORK.
10. REMOVE AND DISPOSE OF WROUGHT IRON FENCE AND GATE.

IDENTIFICATION STAMP
DIV. OF THE STATE ARCHITECT
APP: 02-123433 INC:
REVIEWED FOR
SS ☑ FLS ☑ ACS ☑
DATE: 01/20/2026

ARCHITECHNICA
555 West Benjamin Holt Drive, Suite 423
Stockton, California 95207
P: (209) 952-5850
F: (209) 952-2442
E: hello@architechnica.net
www.architechnica.net

LICENSED ARCHITECT
TIMOTHY L. DEARBORN
C-29928
RENEWAL 12 / 2027
STATE OF CALIFORNIA

© 2026 ARCHITECHNICA

REGISTERED PROFESSIONAL ENGINEER
ANTHONY J. TASSANO
NO. C74696
CIVIL
STATE OF CALIFORNIA

WARREN CONSULTING ENGINEERS, INC.
1117 WINDFIELD WAY, SUITE 110
EL DORADO HILLS, CA 95762 | (916) 985-1870

CONSULTANT

ROADRUNNERS
ERMA B. REESE ELEMENTARY

ERMA B. REESE ELEMENTARY

1800 W ELM ST,
LODI, CA 95242

LODI UNIFIED SCHOOL DISTRICT

REVISIONS

PROJECT NO: 2025-03
ISSUE SET: DSA
ISSUE DATE: 03/16/26
DRAWN BY: JlmS

DEMOLITION PLAN

C1.1

FILENAME: I:\25-037\CIVIL\DWG\25-037-C1.1.DWG PLOTTED: Monday, January 19, 2026

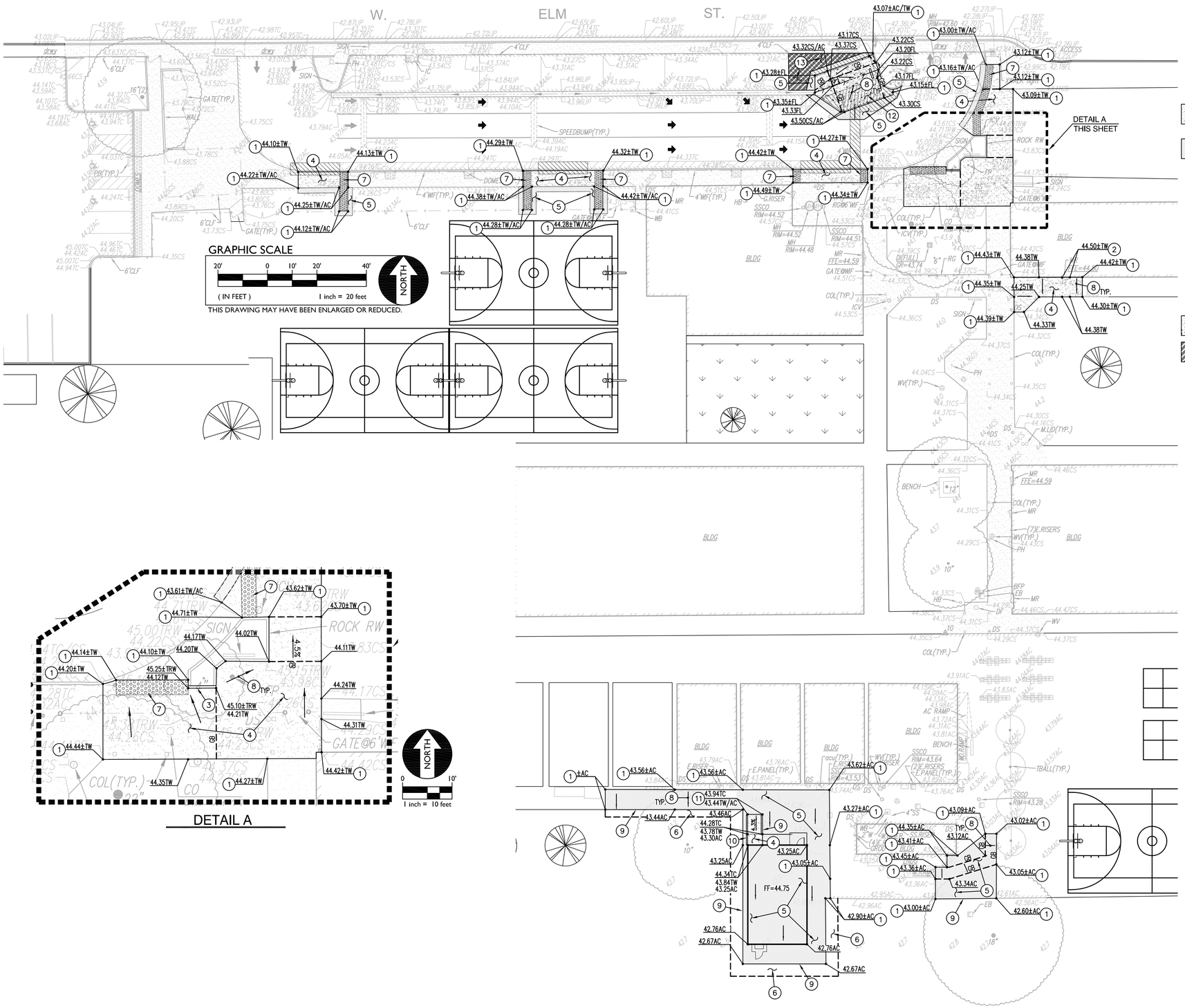

DETAIL A

GRADING AND PAVING AND DRAINAGE NOTES

1. MATCH EXISTING GRADE/ELEVATION.
2. MATCH EXISTING FINISH FLOOR ELEVATION.
3. CONSTRUCT NEW ROCK WALL TO MATCH EXISTING ROCK WALL SECTION.
4. PLACE 5"PCC WITH #4 REBAR AT 24"O.C EACH WAY OVER 12"AB ON COMPACTED SUBGRADE. (1 / C3.1)
5. PLACE 3"AC OVER 12"AB ON COMPACTED SUBGRADE. PLACE 2 (2) APPLICATIONS OF SEAL COAT.
6. TURF DAMAGED BY CONSTRUCTION ACTIVITIES SHALL BE REPLACED WITH AN APPROVED SOD. SPRINKLERS AND IRRIGATION PIPING REMOVED/DAMAGED SHALL BE REPLACED IN A LOCATION THAT WILL ALLOW PROPER COVERAGE TO AREAS BEING IRRIGATED.
7. INSTALL CAST IN PLACE TRUNCATED DOMES PER (3 / C3.1)
8. PEDESTRIAN FLATWORK SHALL BE SLOPED PER THE GENERAL GRADING NOTES THIS SHEET.
9. PLACE HEADER BOARD PER (2 / C3.1)
10. CONSTRUCT VERTICAL CURB PER (4 / C3.1)
11. TAPER FINAL 6" OF CURB FROM FULL HEIGHT TO FINISH GRADE.
12. PLACE 6"PCC WITH #4 REBAR AT 18"O.C EACH WAY OVER 12"AB ON COMPACTED SUBGRADE.
13. PROVIDE 2 COATS OF SEAL COAT.

SUBGRADE PREPARATION

FOLLOWING SITE DEMOLITION ACTIVITIES,

EXCAVATE DOWN TO ROUGH SUBGRADE ELEVATION, SCARIFY THE EXISTING SOILS TO A MINIMUM DEPTH OF 12 INCHES AND UNIFORMLY MOISTURE CONDITION TO AT LEAST 2 PERCENT ABOVE THE OPTIMUM MOISTURE CONTENT AND COMPACT TO AT LEAST 90 PERCENT OF THE MAXIMUM DRY DENSITY PER ASTM D1557. COMPACT TOP 6" OF SUBGRADE TO 95% IN TRAFFIC AREAS.

GENERAL GRADING NOTES:

A. ALL AREAS DISTURBED DURING CONSTRUCTION SHALL BE RESTORED TO A CONDITION EQUAL TO OR BETTER THAN EXISTING CONDITION.
   - DISTURBED TURF SHALL BE REPLACED WITH SOD.
   - LANDSCAPING AND IRRIGATION SHALL BE REPLACED WITH LANDSCAPING AND IRRIGATION IN KIND OR BETTER.

B. ALL AREAS ADJACENT TO PROPOSED FLATWORK SHALL BE GRADED TO DRAIN, 2" BELOW FINISH PAVED SURFACE AND A MAXIMUM SLOPE OF 5:1.

C. REFER TO ARCHITECTURAL PLANS FOR CONCRETE COLORING AND JOINT PATTERNS.

D. SLOPE OF FINISHED PAVING TO BE 1% MINIMUM FOR ASPHALT, 0.5% MINIMUM (1% MIN. AWAY FROM BUILDINGS) FOR CONCRETE AND THE MAXIMUM SLOPE SHALL BE AS FOLLOWS;
   - CROSS SLOPE PERPENDICULAR TO PATH OF TRAVEL – 2%.
   - DIRECTION OF PATH OF TRAVEL – 5%.
   - RAMP IN DIRECTION OF TRAVEL – 8.33%.
   - PLAZA AREAS, DOOR LANDINGS, ACCESSABLE STALLS AND ACCESSIBLE LOADING AREAS – 2% IN ANY DIRECTION

E. ADJUST TO FINISH GRADE ALL UTILITY BOXES, FRAMES, COVERS SLEEVES, POST HOLES GRATES, ETC. FOUND IN AREA OF WORK, WHETHER SHOWN OR NOT. CLEAN OR REPLACE AS NECESSARY TO ENSURE PROPER SEATING.

F. ALL EXPOSED ASPHALT EDGES SHALL HAVE HEADER BOARDS WHETHER SHOWN OR NOT.

FILENAME: I:\25-037\CIVIL\DWG\25-037-C2.1.DWG PLOTTED: Monday, January 12, 2026

IDENTIFICATION STAMP
DIV. OF THE STATE ARCHITECT
APP: 02-123433 INC:
REVIEWED FOR
SS ☑ FLS ☑ ACS ☑
DATE: 01/20/2026

ARCHITECHNICA
555 West Benjamin Holt Drive, Suite 423
Stockton, California 95207
P: (209) 952-5850
F: (209) 952-2442
E: hello@architechnica.net
www.architechnica.net

LICENSED ARCHITECT TIMOTHY L. DEARBORN C-29928 RENEWAL 12 / 2027 STATE OF CALIFORNIA

© 2026 ARCHITECHNICA

REGISTERED PROFESSIONAL ENGINEER ANTHONY J. TASSANO NO. C74696 CIVIL STATE OF CALIFORNIA

WCE
WARREN CONSULTING ENGINEERS, INC.
1117 WINDFIELD WAY, SUITE 110
EL DORADO HILLS, CA 95762 | (916) 985-1870
CONSULTANT

ROADRUNNERS ERMA B. REESE ELEMENTARY

ERMA B. REESE ELEMENTARY

1800 W ELM ST,
LODI, CA 95242

LODI UNIFIED SCHOOL DISTRICT

REVISIONS		

PROJECT NO: 2025-03
ISSUE SET: DSA
ISSUE DATE: 03/16/26
DRAWN BY: JlmS

GRADING AND PAVING PLAN

C2.1

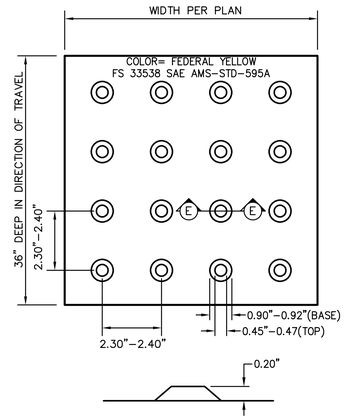

SECTION E-E

NOTES:
1. TRUNCATED DOMES SHALL BE CAST IN PLACE.

3 / C3.1 TRUNCATED DOMES

NO SCALE

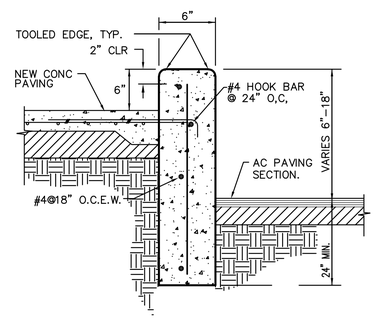

4 / C3.1 VERTICAL CURB

NO SCALE

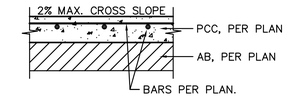

TYPICAL SECTION

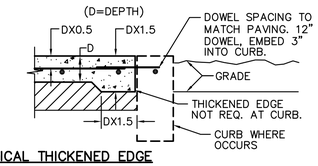

TYPICAL THICKENED EDGE

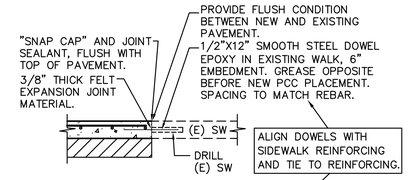

CONNECTION TO (E) CONCRETE

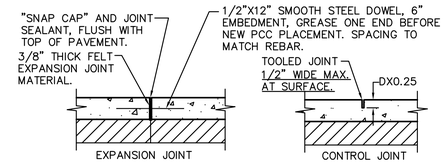

TYPICAL JOINTS

NOTES:
1. PROVIDE FELT EXPANSION JOINTS AT 20 FEET O.C. MAX. SEE PLAN FOR LAYOUT.
2. PROVIDE CONTROL JOINTS AT 10 FEET O.C. MAX. SEE PLAN FOR LAYOUT.
3. EXPANSION OR CONTROL JOINTS SHALL NOT EXCEED 1/2" IN SURFACE WIDTH.

1 / C3.1 CONCRETE SIDEWALK

NO SCALE

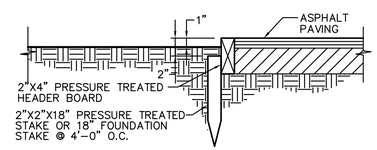

2 / C3.1 HEADER BOARD

NO SCALE

FILENAME: I:\25-037\CIVIL\DWG\25-037-C3.1.DWG PLOTTED: Friday, January 09, 2026

IDENTIFICATION STAMP
DIV. OF THE STATE ARCHITECT
APP: 02-123433 INC:
REVIEWED FOR
SS ☑ FLS ☑ ACS ☑
DATE: 01/20/2026

ARCHITECHNICA
555 West Benjamin Holt Drive, Suite 423
Stockton, California 95207
P: (209) 952-5850
F: (209) 952-2442
E: hello@architechnica.net
www.architechnica.net

LICENSED ARCHITECT
TIMOTHY L. DEARBORN
C-29928
RENEWAL 12 / 2027
STATE OF CALIFORNIA

© 2026 ARCHITECHNICA

REGISTERED PROFESSIONAL ENGINEER
ANTHONY J. TASSANO
NO. C74696
CIVIL
STATE OF CALIFORNIA

WARREN CONSULTING ENGINEERS, INC.
1117 WINDFIELD WAY, SUITE 110
EL DORADO HILLS, CA 95762 | (916) 985-1870
CONSULTANT

ROADRUNNERS
ERMA B. REESE ELEMENTARY

ERMA B. REESE ELEMENTARY

1800 W ELM ST,
LODI, CA 95242

LODI UNIFIED SCHOOL DISTRICT

REVISIONS

PROJECT NO: 2025-03
ISSUE SET: DSA
ISSUE DATE: 03/16/26
DRAWN BY: JlmS

DETAILS

C3.1

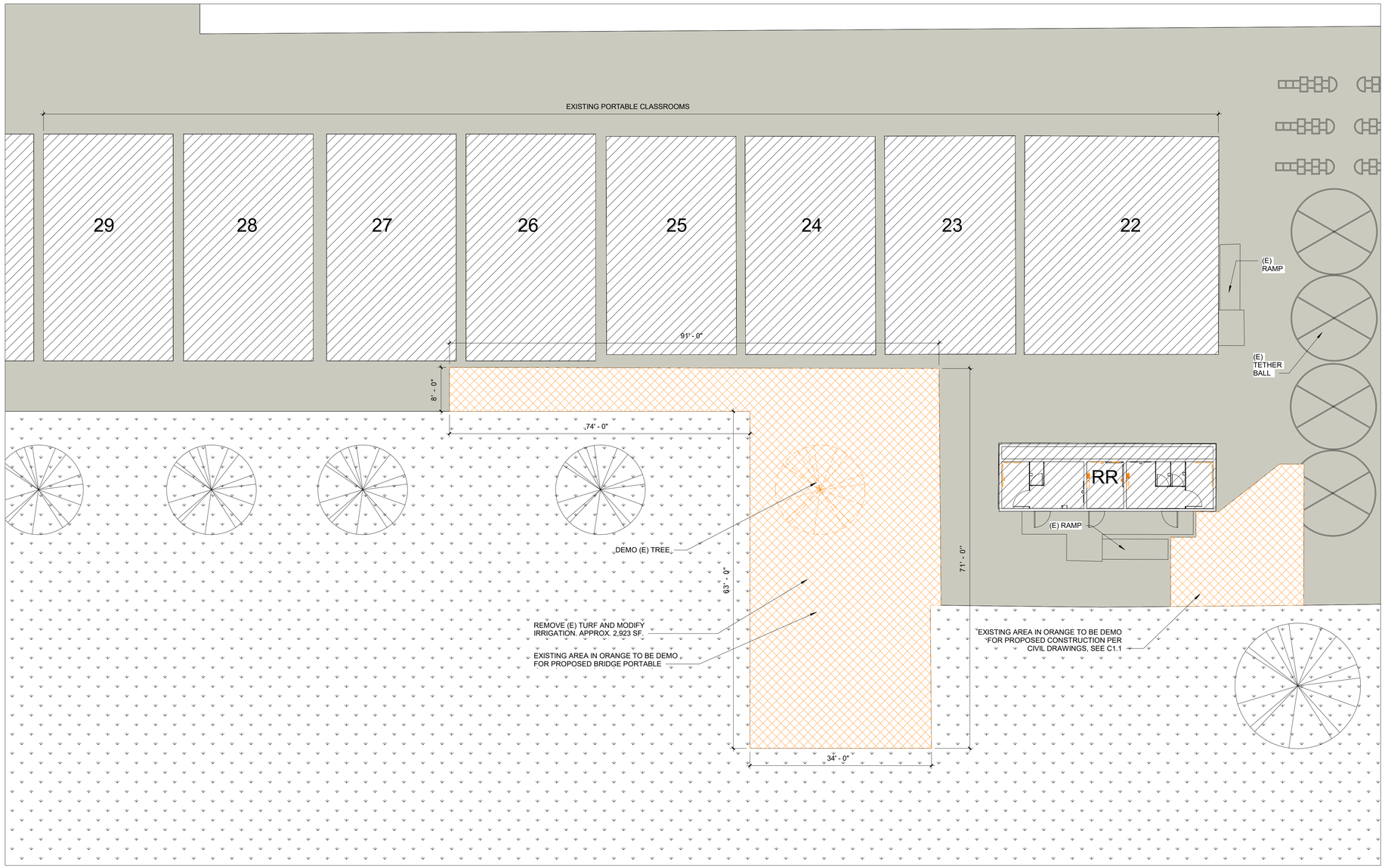

1 ENLARGED SITE PLAN - DEMO
1" = 10'-0"

DEMO SITE LEGEND

- EXISTING BUILDINGS
- EXISTING TURF / GREEN AREA
- EXISTING SOIL / EARTH
- EXISTING ASPHALT
- EXISTING CONCRETE
- TREE
- CHAIN LINK FENCE
- ORNAMENTAL METAL FENCE
- AREA OF DEMOLITION

IDENTIFICATION STAMP
DIV. OF THE STATE ARCHITECT
APP: 02-123433 INC:
REVIEWED FOR
SS ☑ FLS ☑ ACS ☑
DATE: 01/20/2026

ARCHITECHNICA
555 West Benjamin Holt Drive, Suite 423
Stockton, California 95207
P: (209) 952-5850
F: (209) 952-2442
E: hello@architechnica.net
www.architechnica.net

LICENSED ARCHITECT
TIMOTHY L. DEARBORN
C-25928
RENEWAL 12 / 2027
STATE OF CALIFORNIA

© 2026 ARCHITECHNICA

CONSULTANT

ERMA B REESE ELEMENTARY

1800 W ELM ST,
LODI, CA 95242

LODI UNIFIED SCHOOL DISTRICT

REVISIONS

PROJECT NO: 2025-03
ISSUE SET: CD
ISSUE DATE: 12/11/2025
DRAWN BY: HD

ENLARGED SITE PLAN - DEMO

AA1.1

C:\Users\hayat\Documents\Revit_2023\2025-03_Erma B Reese_Bridged Portables_ORIGINAL Ramp_hayatNRD3T.rvt

1/14/2026 9:12:50 AM

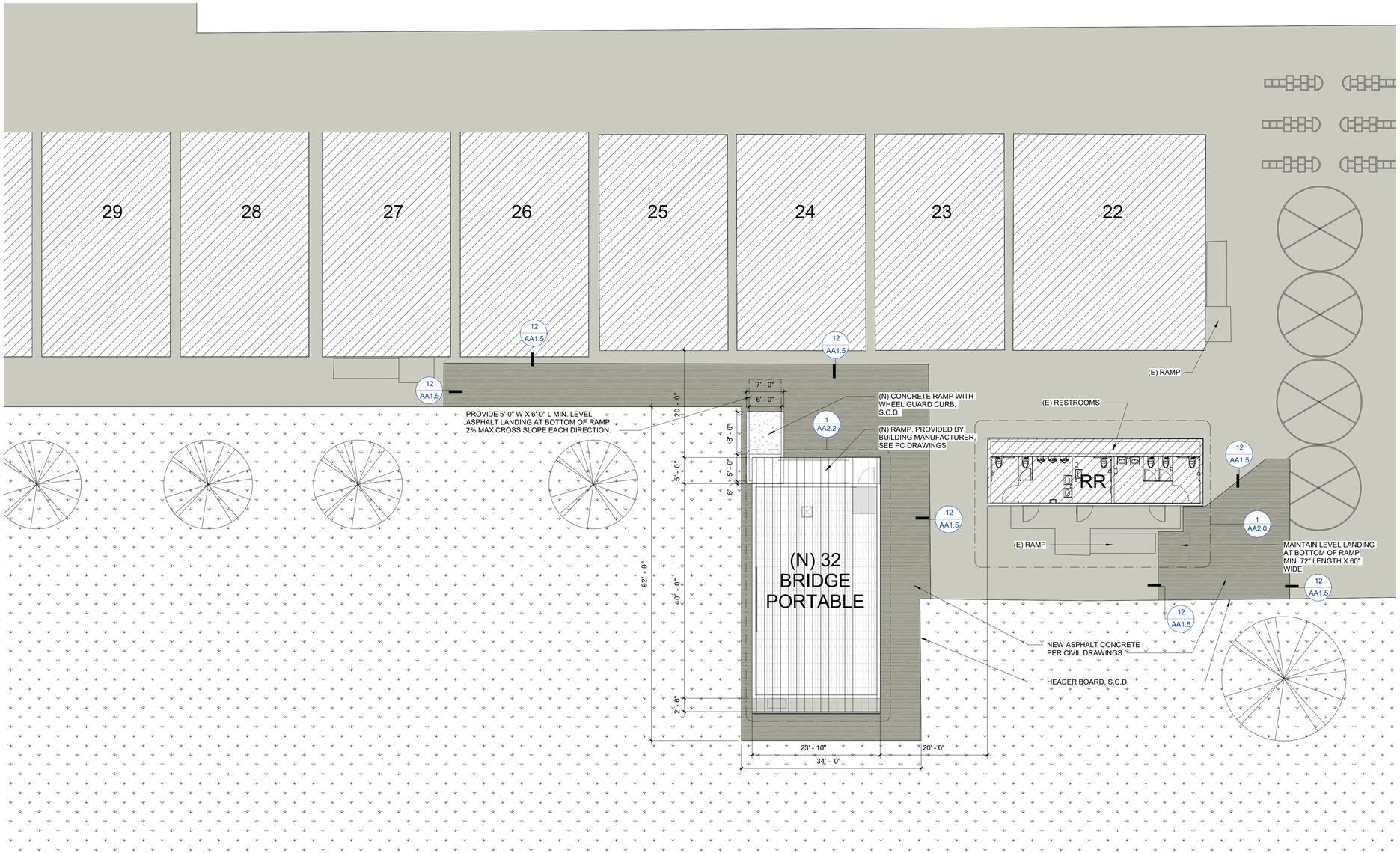

1 ENLARGED SITE PLAN - PROPOSED
1" = 10'-0"

SITE LEGEND

- NEW BUILDINGS
- EXISTING BUILDINGS
- EXISTING TURF / GREEN AREA
- NEW TURF / GREEN AREA
- EXISTING SOIL / EARTH
- NEW ASPHALT
- EXISTING ASPHALT
- NEW CONCRETE
- EXISTING CONCRETE
- FIRE ACCESS LANE
- CHAIN LINK SINGLE GATE
- CHAIN LINK DOUBLE GATE
- TREE
- ORNAMENTAL METAL FENCE
- CHAIN LINK FENCE
- KB — (N) 3200 SERIES KNOX BOX SEE DETAIL 9 / AA1.5
- SAFE DISPERSAL ROUTE

N

IDENTIFICATION STAMP
DIV. OF THE STATE ARCHITECT
APP: 02-123433 INC:
REVIEWED FOR
SS ☑ FLS ☑ ACS ☑
DATE: 01/20/2026

ARCHITECHNICA
555 West Benjamin Holt Drive, Suite 423
Stockton, California 95207
P: (209) 952-5850
F: (209) 952-2442
E: hello@architechnica.net
www.architechnica.net

LICENSED ARCHITECT
TIMOTHY L. DEARBORN
C-29928
RENEWAL 12 / 2027
STATE OF CALIFORNIA

© 2026 ARCHITECHNICA

CONSULTANT

ROADRUNNERS
ERMA B. REESE ELEMENTARY

ERMA B REESE ELEMENTARY

1800 W ELM ST,
LODI, CA 95242

LODI UNIFIED SCHOOL DISTRICT

REVISIONS

PROJECT NO: 2025-03
ISSUE SET: CD
ISSUE DATE: 12/11/2025
DRAWN BY: HD

ENLARGED SITE PLAN - PROPOSED

AA1.2

C:\Users\hayal\Documents\Revit_20232025-03_Erma B Reese_Bridged Portables_ORIGINAL Ramp_hayalNRD3T.rvt

1/14/2026 9:12:51 AM

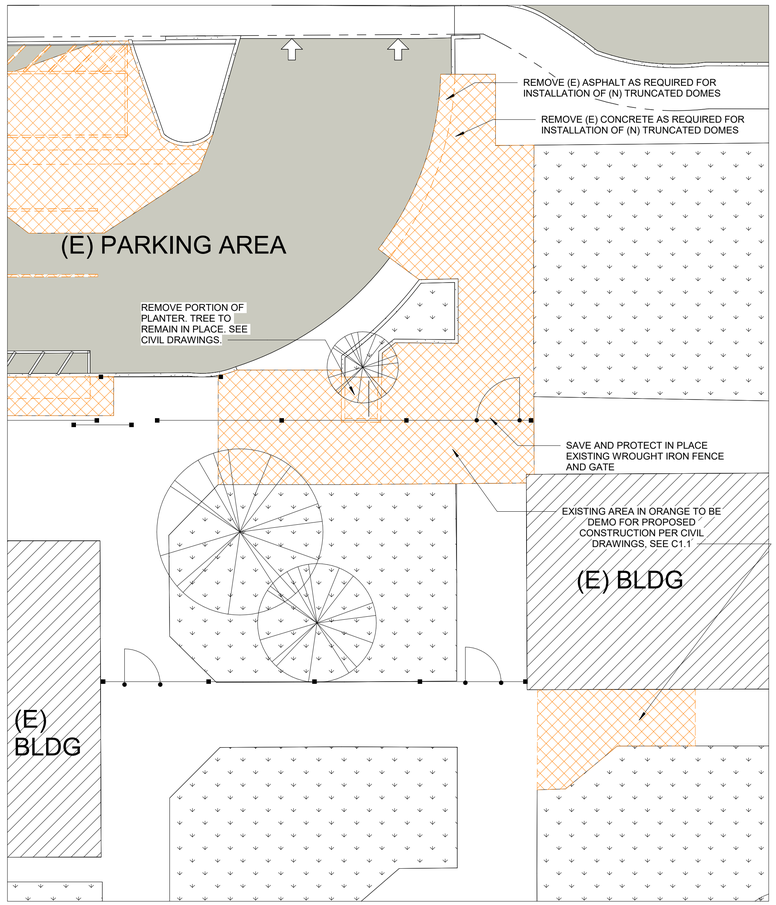

1 ENLARGED SITE PLAN - DEMO ENTRANCE
1" = 10'-0"

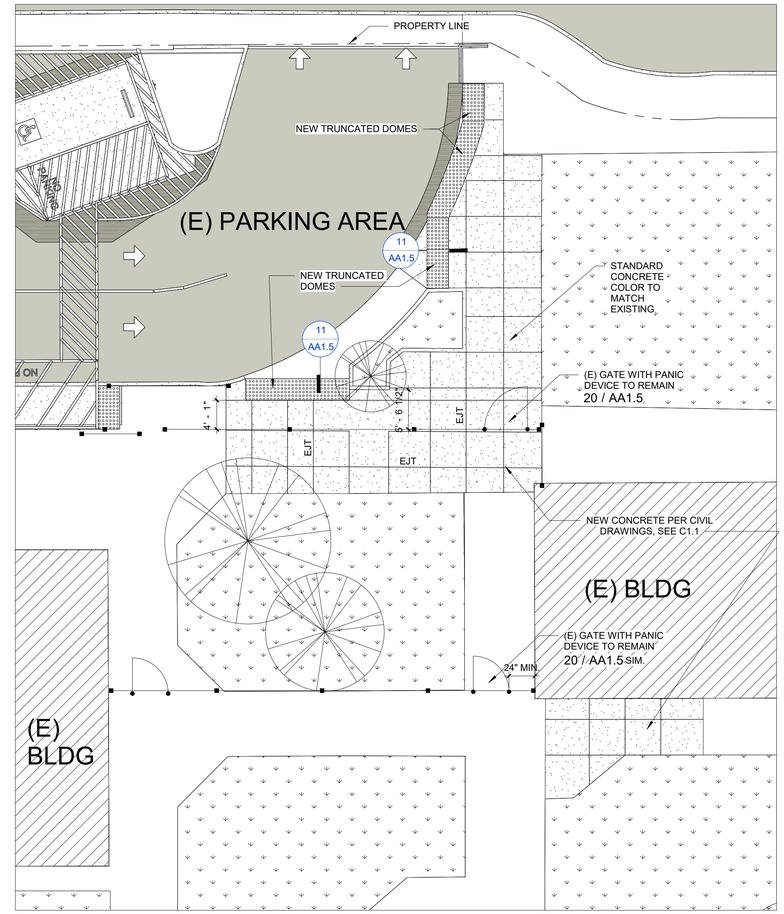

2 ENLARGED SITE PLAN -PROPOSED ENTRANCE
1" = 10'-0"

DEMO SITE LEGEND

- EXISTING BUILDINGS
- EXISTING TURF / GREEN AREA
- EXISTING SOIL / EARTH
- EXISTING ASPHALT
- EXISTING CONCRETE
- TREE
- CHAIN LINK FENCE
- ORNAMENTAL METAL FENCE
- AREA OF DEMOLITION

SITE LEGEND

- NEW BUILDINGS
- EXISTING BUILDINGS
- EXISTING TURF / GREEN AREA
- NEW TURF / GREEN AREA
- EXISTING SOIL / EARTH
- NEW ASPHALT
- EXISTING ASPHALT
- NEW CONCRETE
- EXISTING CONCRETE
- FIRE ACCESS LANE
- CHAIN LINK SINGLE GATE
- CHAIN LINK DOUBLE GATE
- TREE
- ORNAMENTAL METAL FENCE
- CHAIN LINK FENCE
- KB (N) 3200 SERIES KNOX BOX SEE DETAIL 9 / AA1.5
- SAFE DISPERSAL ROUTE

N

IDENTIFICATION STAMP
DIV. OF THE STATE ARCHITECT
APP: 02-123433 INC:
REVIEWED FOR
SS ☑ FLS ☑ ACS ☑
DATE: 01/20/2026

ARCHITECHNICA
555 West Benjamin Holt Drive, Suite 423
Stockton, California 95207
P: (209) 952-5850
F: (209) 952-2442
E: hello@architechnica.net
www.architechnica.net

LICENSED ARCHITECT
TIMOTHY L. DEARBORN
C-29928
RENEWAL 12 / 2027
STATE OF CALIFORNIA

© 2026 ARCHITECHNICA

CONSULTANT

ROADRUNNERS
ERMA B. REESE ELEMENTARY

ERMA B REESE ELEMENTARY

1800 W ELM ST,
LODI, CA 95242

LODI UNIFIED SCHOOL DISTRICT

REVISIONS

PROJECT NO: 2025-03
ISSUE SET: CD
ISSUE DATE: 12/11/2025
DRAWN BY: HD

ENLARGED SITE PLAN - DEMO PROPOSED ENTRANCE

AA1.3

C:\Users\haya\Documents\Revit_2023\2025-03_Erma B Reese_Bridged Portables_ORIGINAL Ramp_hayaNR03T.rvt

1/14/2026 9:12:54 AM

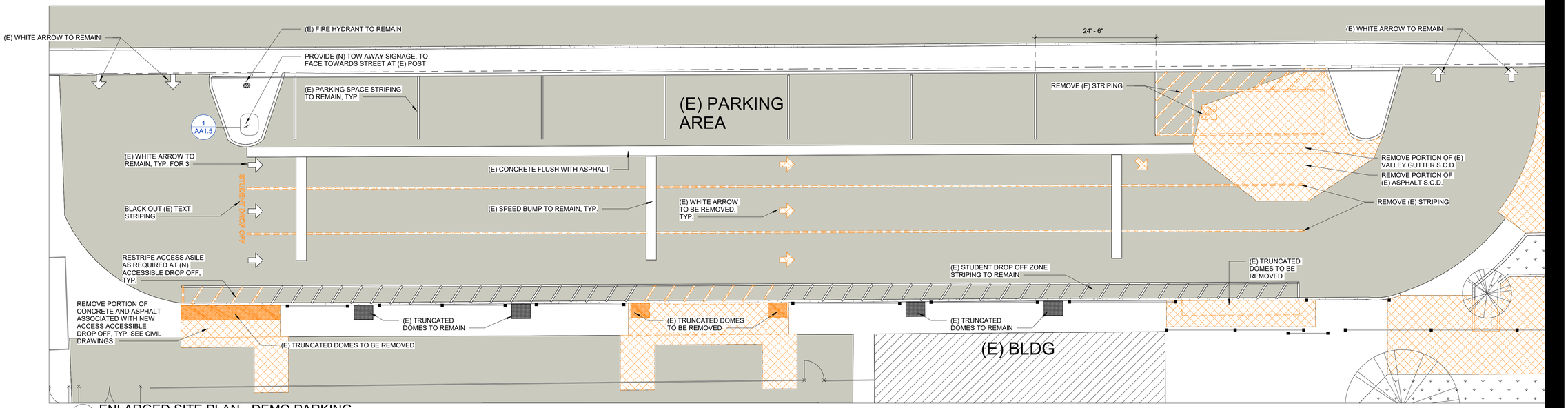

1 ENLARGED SITE PLAN - DEMO PARKING
1" = 10'-0"

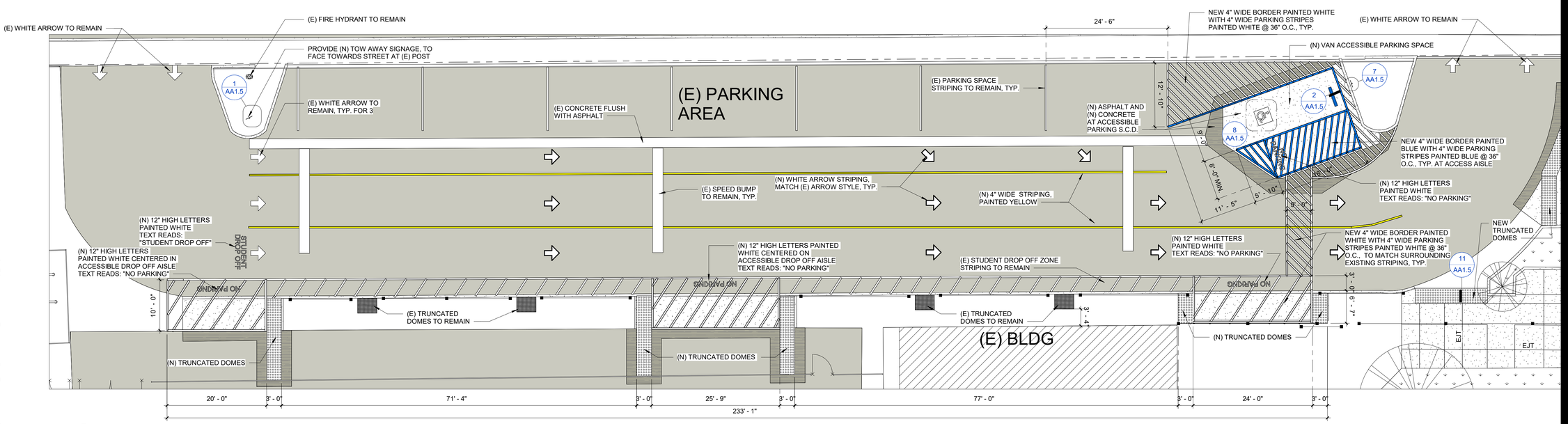

2 ENLARGED SITE PLAN - MODERNIZED PARKING LOT
1" = 10'-0"

DEMO SITE LEGEND

- EXISTING BUILDINGS
- EXISTING TURF / GREEN AREA
- EXISTING SOIL / EARTH
- EXISTING ASPHALT
- EXISTING CONCRETE
- TREE
- CHAIN LINK FENCE
- ORNAMENTAL METAL FENCE
- AREA OF DEMOLITION

SITE LEGEND

- NEW BUILDINGS
- EXISTING BUILDINGS
- EXISTING TURF / GREEN AREA
- NEW TURF / GREEN AREA
- EXISTING SOIL / EARTH
- NEW ASPHALT
- EXISTING ASPHALT
- NEW CONCRETE
- EXISTING CONCRETE
- FIRE ACCESS LANE
- CHAIN LINK SINGLE GATE
- CHAIN LINK DOUBLE GATE
- TREE
- ORNAMENTAL METAL FENCE
- CHAIN LINK FENCE
- KB (N) 3200 SERIES KNOX BOX SEE DETAIL 9 / AA1.5
- SAFE DISPERSAL ROUTE

IDENTIFICATION STAMP
DIV. OF THE STATE ARCHITECT
APP: 02-123433 INC:
REVIEWED FOR
SS ☑ FLS ☑ ACS ☑
DATE: 01/20/2026

ARCHITECHNICA
555 West Benjamin Holt Drive, Suite 423
Stockton, California 95207
P: (209) 952-5850
F: (209) 952-2442
E: hello@architechnica.net
www.architechnica.net

LICENSED ARCHITECT · TIMOTHY L. DEARBORN · C-29928 · RENEWAL 12 / 2027 · STATE OF CALIFORNIA

© 2026 ARCHITECHNICA

CONSULTANT

ROADRUNNERS ERMA B. REESE ELEMENTARY

ERMA B REESE ELEMENTARY

1800 W ELM ST,
LODI, CA 95242

LODI UNIFIED SCHOOL DISTRICT

REVISIONS

PROJECT NO: 2025-03
ISSUE SET: CD
ISSUE DATE: 12/11/2025
DRAWN BY: HD

ENLARGED SITE PLAN - DEMO PROPOSED PARKING

AA1.4

C:\Users\hayal\Documents\Revit_2023\2025-03_Erma B Reese_Bridged Portables_ORIGINAL Ramp_hayaNRD3T.rvt

1/14/2026 9:13:13 AM

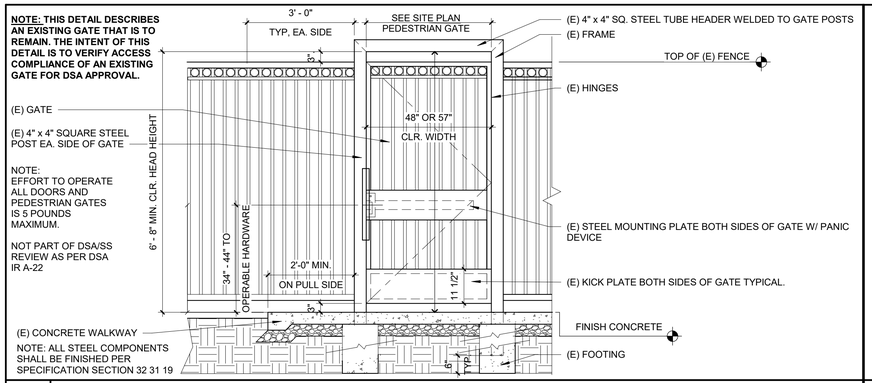

20 ORNAMENTAL METAL GATE
SCALE: 1/2" = 1'-0" — *FILENAME: 32_31_27*

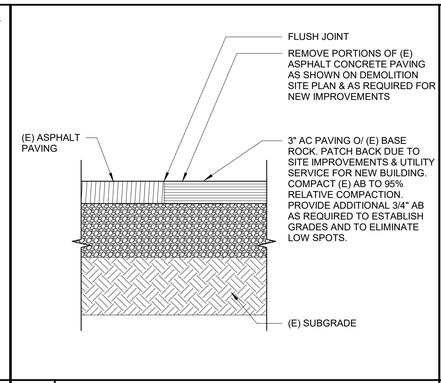

12 AC PAVING TO (E) AC PAVING
SCALE: 1 1/2" = 1'-0" — *FILENAME: 32_12_04*

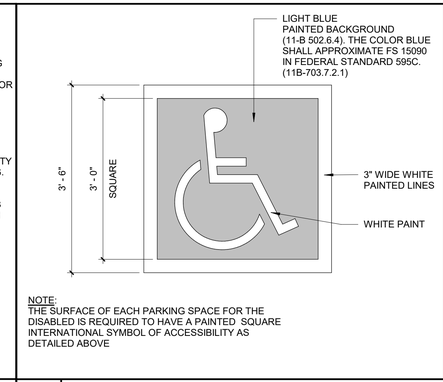

8 PAINTED ACCESSIBLE SYMBOL
SCALE: 3/4" = 1'-0" — *FILENAME: ACC_PARK_6*

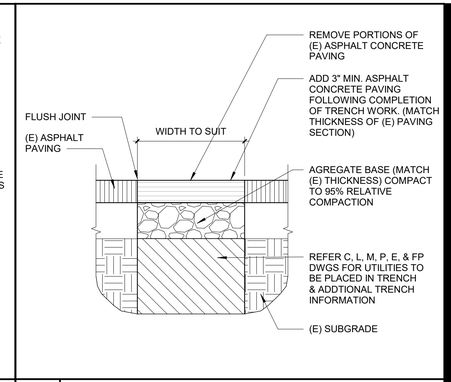

4 UTILITY TRENCH AT AC PAVING
SCALE: 1 1/2" = 1'-0" — *FILENAME: 32_12_04*

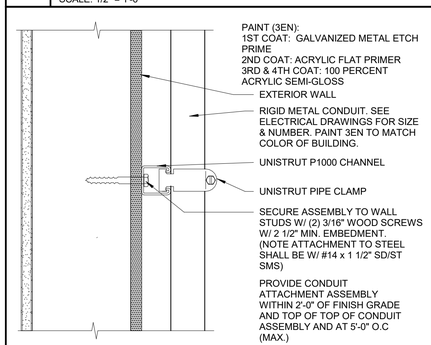

19 EXT. CONDUIT ATTACHMENT @ WALL
SCALE: 3" = 1'-0" — *FILENAME: 26_05_05*

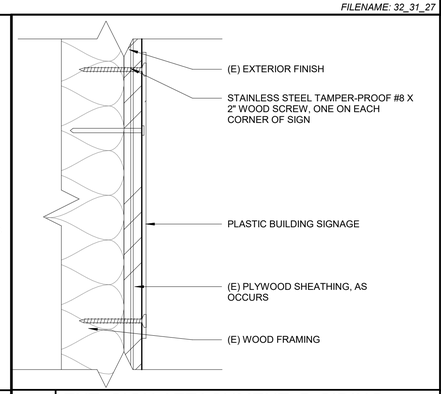

15 EXT. SIGN ATTACHMENT @ SIDING
SCALE: 6" = 1'-0" — *FILENAME: 10_11_45W*

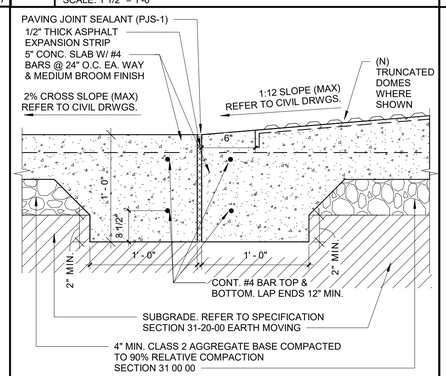

11 CONC. WALK @ TRUNCATED DOMES
SCALE: 1 1/2" = 1'-0" — *FILENAME: 32_13_52*

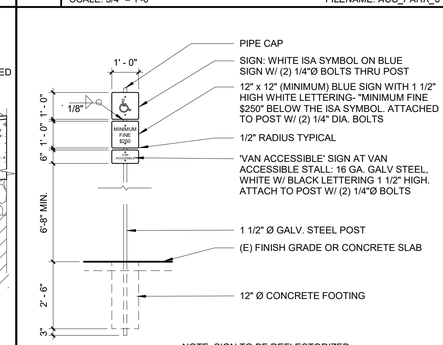

7 ACCESSIBLE PARKING SPACE SIGN
SCALE: 3/8" = 1'-0" — *FILENAME: ACC_PK_14*

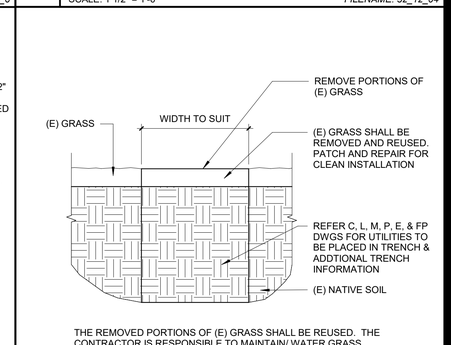

3 UTILITY TRENCH AT (E) TURF
SCALE: 1 1/2" = 1'-0" — *FILENAME: 32_10_01*

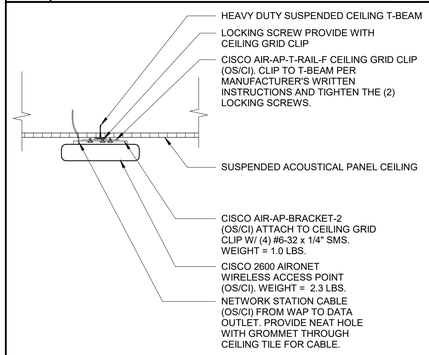

18 WAP MOUNTING DETAIL
SCALE: 1 1/2" = 1'-0" — *FILENAME: 27_00_03*

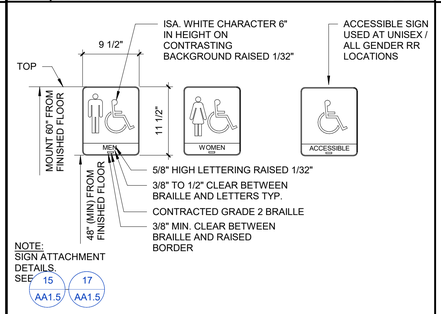

PROVIDE PLASTIC ENGRAVED, 9 1/2" WIDE x 11 1/2" HIGH x 1/8" THICK (BACKGROUND) CALIFORNIA TITLE 24 AND ADA COMPLIANT COMBINATION RESTROOM NAME & SYMBOL SIGN.

PROVIDE INTERNATIONAL SYMBOL OF ACCESSIBILITY ON SIGN. SYMBOL SHALL HAVE A WHITE CHARACTER ON A CONTRASTING BACKGROUND AND SHALL BE 6" HIGH

RESTROOM NAMES SHALL BE PER SIGNAGE SECTION OF DOOR SCHEDULE.

COLORS SHALL BE SELECTED BY THE ARCHITECT AND SHALL MATCH SIGNS ALREADY INSTALLED ON CAMPUS.

TACTILE LETTERS AND NUMBERS SHALL COMPLY WITH THE REQUIREMENTS OF PARAGRAPH 2.1 C OF PROJECT MANUAL SECTION 10 14 00 "SIGNS AND GRAPHICS" AND 2022 CALIFORNIA BUILDING CODE SECTION 11B-703.2.

TACTILE LETTERS AND/OR NUMBERS ON SIGNS SHALL BE DUPLICATED IN CONTRACTED GRADE 2 BRAILLE COMPLYING WITH THE REQUIREMENTS OF PARAGRAPH 2.1 D OF PROJECT MANUAL SECTION 10 14 00 "SIGNS AND GRAPHICS" AND 2022 CALIFORNIA BUILDING CODE SECTION 11B-703.3.

PROVIDE 3/32" WIDE BORDERS RAISED 1/32" AND 1/2" RADIUS CORNERS.

CHARACTERS & SYMBOLS SHALL CONTRAST WITH THEIR BACKGROUND (70% MIN.) THE BACKGROUND OF SIGN SHALL CONTRAST WITH WALL COLOR (70% MIN.) SIGNS SHALL HAVE AN NON-GLARE MATTE FINISH.

SIGNS SHALL BE INSTALLED ON THE WALL ADJACENT TO THE LATCH SIDE OF THE DOOR. WHERE THERE IS NO WALL SPACE ON THE LATCH SIDE, INCLUDING AT DOUBLE LEAF DOORS, SIGNS SHALL BE PLACED ON THE NEAREST ADJACENT WALL PREFERABLY ON THE RIGHT HAND SIDE.

13 RESTROOM SIGNAGE
SCALE: 1" = 1'-0" — *FILENAME: 10_14_10*

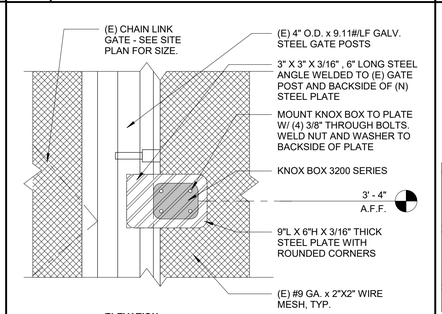

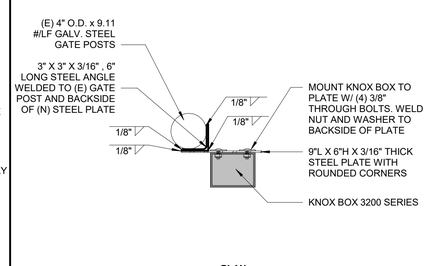

9 KNOX BOX ATTACHMENT @ CL FENCE
SCALE: 1 1/2" = 1'-0" — *FILENAME: 32_13_05*

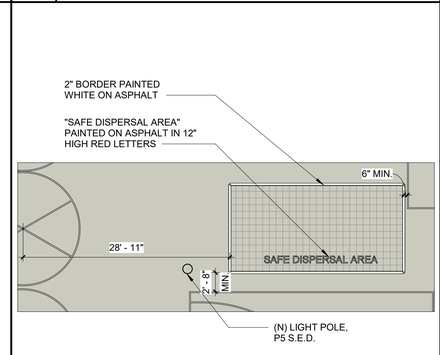

6 SAFE DISPERSAL AREA
SCALE: 1" = 10'-0" — *FILENAME: 32_13_05*

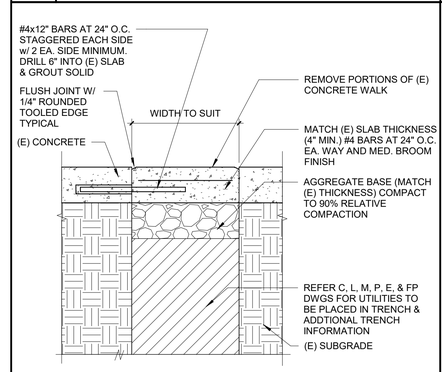

5 UTILITY TRENCH AT CONC. WALKWAY
SCALE: 1 1/2" = 1'-0" — *FILENAME: 32_13_05*

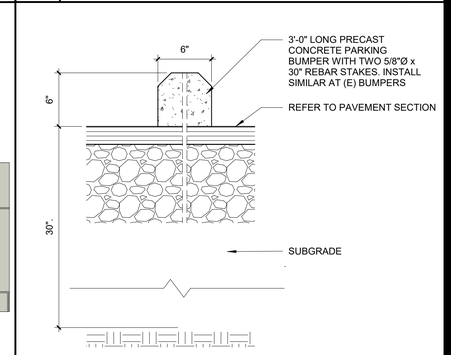

2 WHEELSTOP
SCALE: 1 1/2" = 1'-0" — *FILENAME: 34_71_04*

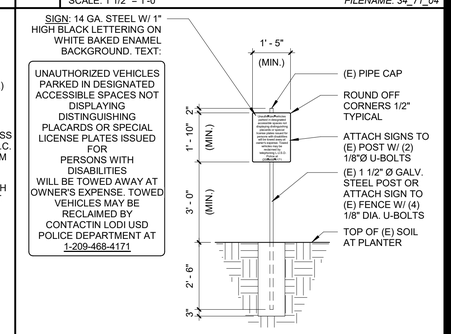

1 TOW-AWAY SIGN AT (E) SIGN POST
SCALE: 3/8" = 1'-0" — *FILENAME: ACC_PK_22*

IDENTIFICATION STAMP
DIV. OF THE STATE ARCHITECT
APP: 02-123433 INC:
REVIEWED FOR
SS ☑ FLS ☑ ACS ☑
DATE: 01/20/2026

ARCHITECHNICA
555 West Benjamin Holt Drive, Suite 423
Stockton, California 95207
P: (209) 952-5850
F: (209) 952-2442
E: hello@architechnica.net
www.architechnica.net

LICENSED ARCHITECT — TIMOTHY L. DEARBORN — C-29928 — RENEWAL 12 / 2027 — STATE OF CALIFORNIA

© 2026 ARCHITECHNICA

CONSULTANT

ERMA B. REESE ELEMENTARY

ERMA B REESE ELEMENTARY

1800 W ELM ST,
LODI, CA 95242

LODI UNIFIED SCHOOL DISTRICT

REVISIONS

PROJECT NO: 2025-03
ISSUE SET: CD
ISSUE DATE: 12/11/2025
DRAWN BY: HD

SITE DETAILS

AA1.5

C:\Users\hayal\Documents\Revit_2023\2025-03_Erma B Reese_Bridged Portables_ORIGINAL Ramp_hayaNRD3T.rvt

1/14/2026 9:13:15 AM

NOTE: THIS DETAIL DESCRIBES AN EXISTING DRINKING FOUNTAIN THAT IS TO REMAIN. THE INTENT OF THIS DETAIL IS TO VERIFY ACCESS COMPLIANCE OF AN EXISTING DRINKING FOUNTAIN FOR DSA APPROVAL.

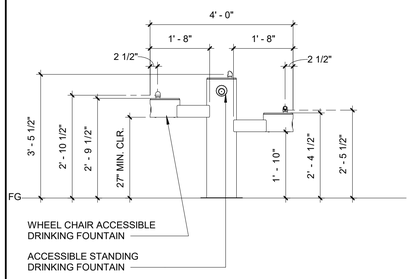

20 (E) HI-LO ACC. DRINKING FOUNTAIN
SCALE: 1/2" = 1'-0" FILENAME: 22_40_12c

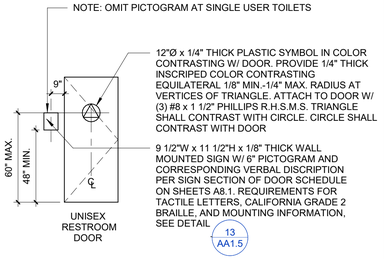

NOTE:
THE CHARACTERS & BACKGROUND OF THE SIGNS SHALL HAVE A NON-GLARE MATTE FINISH AND THE COLOR OF THE SIGN SHALL DISTINCTIVELY CONTRAST WITH THE COLOR OF THE SURFACE THE SIGN IS MOUNTED ON OR TO. COLORS SHALL BE SELECTED BY ARCHITECT

16 ACCESSIBLE UNISEX RR SIGNAGE
SCALE: 1/4" = 1'-0" FILENAME: ACC_RR_12

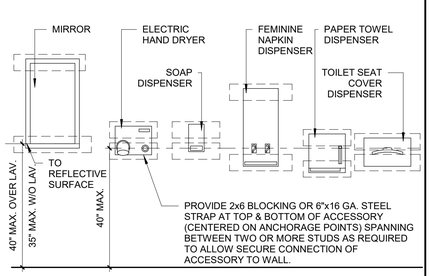

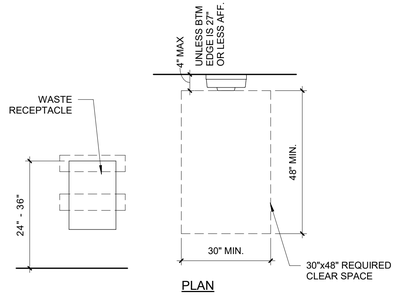

ELEVATION NOTES:

1. THESE DETAILS SHOW THE MINIMUM ACCESS REQUIREMENTS FOR ACCESSIBLE TOILET ROOM ACCESSORIES.
2. ACCESSORIES SHOWN ARE GENERIC. REFER TO TOILET ROOM ACCESSORY SCHEDULE FOR ACCESSORIES USED.
3. FOR RECESSED UNITS PROVIDE BLOCKED OUT OPENING PER MANUFACTURER'S ROUGH-IN DIMENSIONS. REFER TO DETAIL FOR STEEL CONSTRUCTION. WRAP 1 LAYER OF 5/8" TYPE 'X' GYPSUM BOARD AROUND BLOCKED OPENING AT ONE HOUR FIRE RATED WALLS AND 2 LAYERS OF 5/8" TYPE 'X' GYPSUM BOARD AT 2 HOUR FIRE RATED AND AREA SEPARATION WALLS.

11 TOILET ROOM ACCESSORIES
SCALE: 1/2" = 1'-0" FILENAME: ACC_RR_07

NOTE: FOR (E) DRINKING FOUNTAIN ELEVATION SEE 20 AA1.8

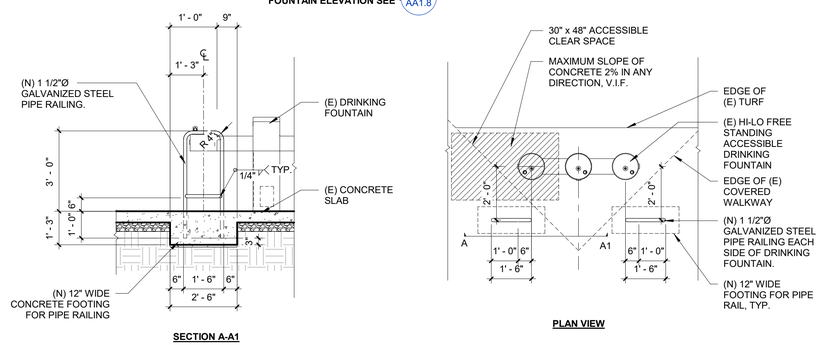

8 HI-LO ACCESSIBLE DRINKING FOUNTAIN
SCALE: 3/8" = 1'-0" FILENAME: 22_40_12c

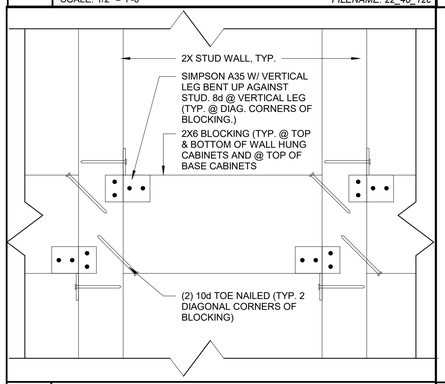

19 TYP. BLOCKING (WALL ELEV.)
SCALE: 3" = 1'-0"

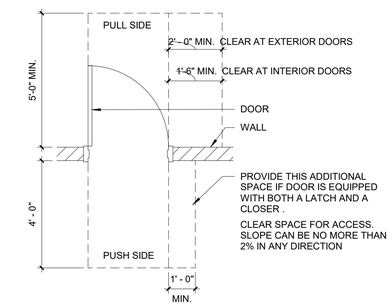

15 TYPICAL DOOR LANDING CLEARANCES
SCALE: 3/8" = 1'-0" FILENAME: ACC_DR_1

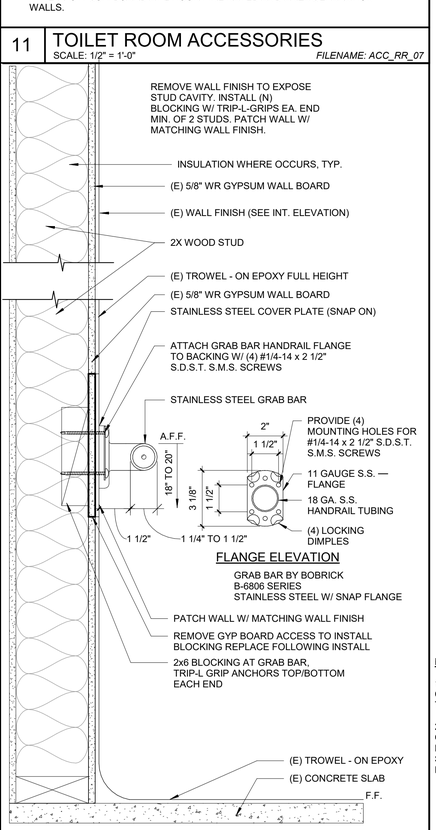

9 GRAB BAR / (E) WALL
SCALE: 3" = 1'-0" FILENAME: 10_28_15

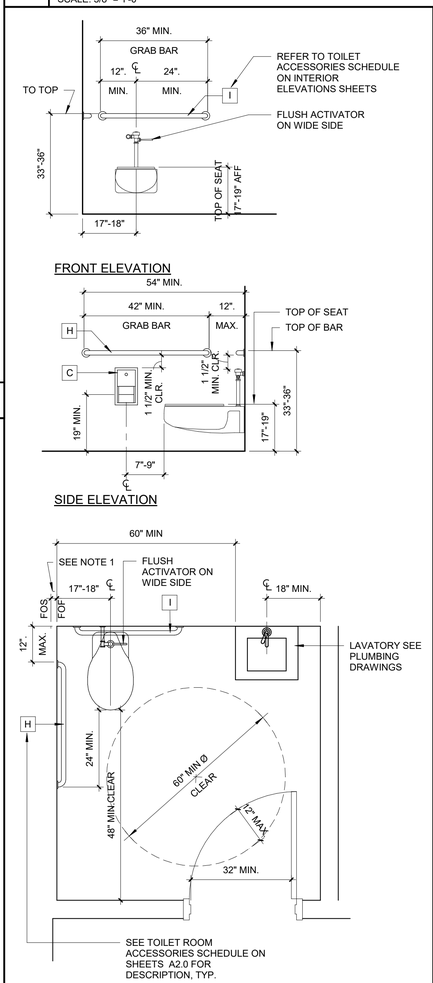

NOTES:

1. THICKNESS OF FINISH WALL SURFACE VARIES DUE TO MATERIALS USED. CONTRACTOR SHALL REVIEW WALL FINISH COMPOSITION AND DIMENSION AND SHALL TAKE THIS INTO ACCOUNT WHILE LAYING OUT TOILET LOCATION.
2. THIS DETAIL SHOWS THE MINIMUM ACCESS REQUIREMENTS FOR A SINGLE OCCUPANCY TOILET. PLEASE NOTE THAT THE OVERALL DIMENSION AND LAYOUT RELATED TO THE TOILET ROOM WILL PROBABLY BE LARGER AND DIFFERENT THAN SHOWN HERE. REFER TO FLOOR PLANS REFERENCING THIS DETAIL FOR THE OVERALL DIMENSION, SIZE, AND LAYOUT OF THE TOILET ROOM.

5 ACC. SINGLE OCCUPANCY RESTROOM
SCALE: 1/2" = 1'-0" FILENAME: ACC_RR_02

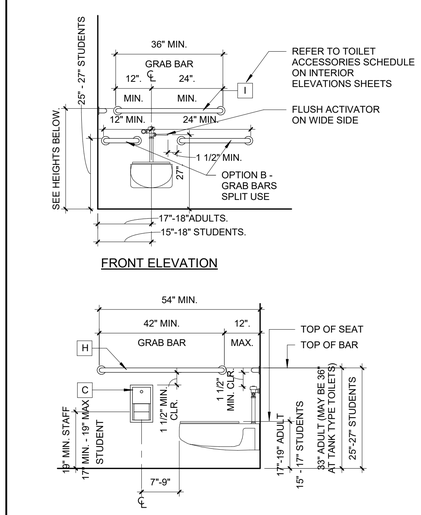

NOTES:

1. THICKNESS OF FINISH WALL SURFACE VARIES DUE TO MATERIALS USED. CONTRACTOR SHALL REVIEW WALL FINISH COMPOSITION AND DIMENSION AND SHALL TAKE THIS INTO ACCOUNT WHILE LAYING OUT TOILET & TOILET STALL LOCATIONS.
2. THESE DETAILS ARE DIAGRAMMATIC & SHOW THE MINIMUM ACCESS REQUIREMENTS FOR THE ACCESSIBLE TOILET STALL. PLEASE NOTE THAT THE DIMENSIONS AND LAYOUT RELATED TO THE STALL ARE DIFFERENT THAN SHOWN HERE. REFER TO FLOOR PLANS FOR DIMENSIONS AND LAYOUT OF STALL.
3. USE SUGGESTED CONSTRUCTION TOLERANCES FOR AGE 9-12 RANGE FOR STUDENT RESTROOMS AS DESCRIBED IN CBC 11B 604.9.

1 ACCESSIBLE TOILET STALL
SCALE: 1/2" = 1'-0" FILENAME: ACC_RR_03

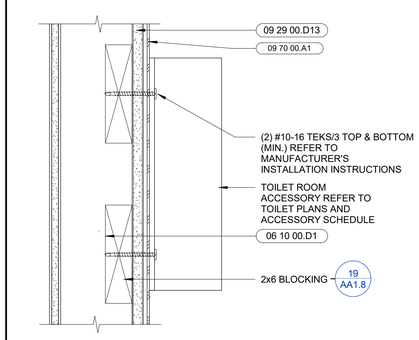

* IF BOTTOM OF UNIT IS GREATER THAN 27" A.F.F.
3" IF ACCESSORY IS LOCATED AT/OR BELOW GRAB BAR.

18 ACCESSORY ANCHORAGE TO WALL
SCALE: 3" = 1'-0" FILENAME: 10_28_07

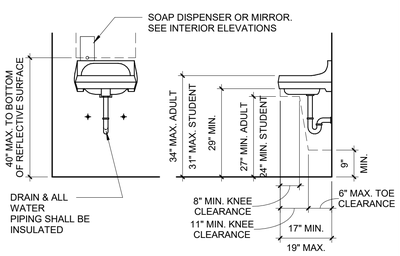

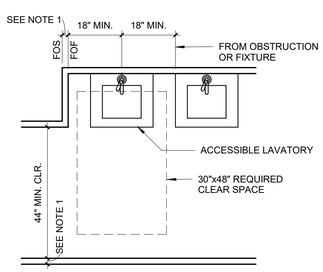

NOTES:

1. THICKNESS OF FINISH WALL SURFACE VARIES DUE TO MATERIALS USED. CONTRACTOR SHALL REVIEW WALL FINISH COMPOSITION AND DIMENSION AND SHALL TAKE THIS INTO ACCOUNT WHILE LAYING OUT LAVATORY LOCATIONS.
2. THIS DETAIL SHOWS THE MINIMUM ACCESS REQUIREMENTS FOR AN ACCESSIBLE LAVATORY. PLEASE NOTE THAT THE DIMENSIONS AND LAYOUT MAY BE LARGER AND DIFFERENT THAN SHOWN HERE. REFER TO FLOOR PLANS REFERENCING THIS DETAIL FOR DIMENSIONS RELATED TO THE SIZE AND LAYOUT OF THE LAVATORY SPACE.
3. THERE SHALL BE NO SHARP OR ABRASIVE SURFACES UNDER THE LAVATORY.

13 ACCESSIBLE LAVATORY
SCALE: 1/2" = 1'-0" FILENAME: ACC_RR_01

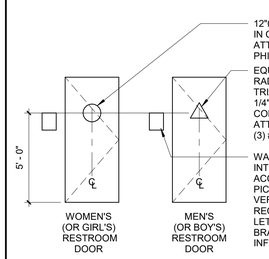

NOTE:
THE CHARACTERS & BACKGROUND OF THE SIGNS SHALL HAVE A NON-GLARE MATTE FINISH AND THE COLOR OF THE SIGN SHALL DISTINCTIVELY CONTRAST WITH THE COLOR OF THE SURFACE THE SIGN IS MOUNTED ON OR TO. COLORS SHALL BE SELECTED BY ARCHITECT

17 ACCESSIBLE RESTROOM SIGNAGE
SCALE: 1/4" = 1'-0" FILENAME: ACC_RR_11

IDENTIFICATION STAMP
DIV. OF THE STATE ARCHITECT
APP: 02-123433 INC:
REVIEWED FOR
SS ☑ FLS ☑ ACS ☑
DATE: 01/20/2026

ARCHITECHNICA

555 West Benjamin Holt Drive, Suite 423
Stockton, California 95207
P: (209) 952-5850
F: (209) 952-2442
E: hello@architechnica.net
www.architechnica.net

LICENSED ARCHITECT TIMOTHY L. DEARBORN C-29928 RENEWAL 12 / 2027 STATE OF CALIFORNIA

© 2026 ARCHITECHNICA

CONSULTANT

ROADRUNNERS ERMA B. REESE ELEMENTARY

ERMA B REESE ELEMENTARY

1800 W ELM ST,
LODI, CA 95242

LODI UNIFIED SCHOOL DISTRICT

REVISIONS

PROJECT NO: 2025-03
ISSUE SET: CD
ISSUE DATE: 12/11/2025
DRAWN BY: HD

ACCESSIBILITY DETAILS

AA1.8

C:\Users\haya\Documents\Revit_2023\2025-03_Erma B Reese_Bridged Portables_ORIGINAL Ramp_hayaNRD3T.rvt

1/14/2026 9:13:15 AM

TOILET ACCESSORY SCHEDULE - MASTER					
TYPE MARK	DESCRIPTION	MANUFACTURER	MANUF. #	COMMENTS	DETAILS
BOYS RR					
A	(N) 12" GRAB BAR	BOBRICK	B-6806	MOUNT CENTERLINE AT 25" - 27" A.F.F. AT STUDENT RESTROOMS	1/AA1.8, 9/AA1.8
B	(N) 24" GRAB BAR	BOBRICK	B-6806	MOUNT CENTERLINE AT 25" - 27" A.F.F. AT STUDENT RESTROOMS	1/AA1.8, 9/AA1.8
C	(E) TOILET PAPER DISPENSER	(E)	(E)	REMAIN IN PLACE	1/AA1.8, 5/AA1.8
D	(E) TOILET PARTITION	(E)	(E)	REMAIN IN PLACE	1/AA1.8
E	(E) MIRROR	(E)	(E)	REMAIN IN PLACE	11/AA1.8
F	(E) SOAP DISPENSER	(E)	(E)	REMAIN IN PLACE	11/AA1.8
G	(E) PAPER TOWEL DISPENSER	(E)	(E)	REMAIN IN PLACE	11/AA1.8
H	(E) 48" GRAB BAR	(E)	(E)	TO BE REMOVED AND SALVAGED FOR REUSE. MOUNT CENTERLINE AT 25" - 27" A.F.F. AT STUDENT RESTROOMS	1/AA1.8, 5/AA1.8, 9/AA1.8
N	(N) SURAFED-MOUNTED WASTE RECEPTACLE	BOBRICK	B-277	MOUNT SO OPENING IS 30" A.F.F., CENTERED ON PAPER TOWEL DISPENSER.	11/AA1.8
P	(N) TOILET PAPER DISPENSER	SAN JAMAR	R1500XC	MOUNT HORIZONTALLY 17" - 19" A.F.F. AND 7"-9" FROM WATER CLOSET TO CENTERLINE OF OPERABLE SIDE OF DISPENSER	1/AA1.8, 5/AA1.8
GIRLS RR					
A	(N) 12" GRAB BAR	BOBRICK	B-6806	MOUNT CENTERLINE AT 25" - 27" A.F.F. AT STUDENT RESTROOMS	1/AA1.8, 9/AA1.8
B	(N) 24" GRAB BAR	BOBRICK	B-6806	MOUNT CENTERLINE AT 25" - 27" A.F.F. AT STUDENT RESTROOMS	1/AA1.8, 9/AA1.8
C	(E) TOILET PAPER DISPENSER	(E)	(E)	REMAIN IN PLACE	1/AA1.8, 5/AA1.8
D	(E) TOILET PARTITION	(E)	(E)	REMAIN IN PLACE	1/AA1.8
E	(E) MIRROR	(E)	(E)	REMAIN IN PLACE	11/AA1.8
F	(E) SOAP DISPENSER	(E)	(E)	REMAIN IN PLACE	11/AA1.8
G	(E) PAPER TOWEL DISPENSER	(E)	(E)	TO BE REMOVED AND SALVAGED FOR REUSE, MOUNT OPERABLE PART 40" MAX. A.F.F.	11/AA1.8
H	(E) 48" GRAB BAR	(E)	(E)	TO BE REMOVED AND SALVAGED FOR REUSE. MOUNT CENTERLINE AT 25" - 27" A.F.F. AT STUDENT RESTROOMS	1/AA1.8, 5/AA1.8, 9/AA1.8
P	(N) TOILET PAPER DISPENSER	SAN JAMAR	R1500XC	MOUNT HORIZONTALLY 17" - 19" A.F.F. AND 7"-9" FROM WATER CLOSET TO CENTERLINE OF OPERABLE SIDE OF DISPENSER	1/AA1.8, 5/AA1.8
STAFF RR					
C	(N) TOILET PAPER DISPENSER	BOBRICK	B-2888	MOUNT 19" MIN. A.F.F. TO OPERABLE PART AND 7"-9" FROM WATER CLOSET TO CENTERLINE OF OPERABLE PART OF DISPENSER	1/AA1.8, 5/AA1.8
E	(E) MIRROR	(E)	(E)	TO BE REMOVED AND SALVAGED FOR REUSE. MOUNT BOTTOM OF REFLECTIVE SURFACE 40" MAX. A.F.F.	11/AA1.8
F	(E) SOAP DISPENSER	(E)	(E)	TO BE REMOVED AND SALVAGED FOR REUSE, MOUNT OPERABLE PART 40" MAX. A.F.F.	11/AA1.8
G	(E) PAPER TOWEL DISPENSER	(E)	(E)	TO BE REMOVED AND SALVAGED FOR REUSE, MOUNT OPERABLE PART 40" MAX. A.F.F.	11/AA1.8
H	(E) 48" GRAB BAR	(E)	(E)	REMAIN IN PLACE	1/AA1.8, 5/AA1.8, 9/AA1.8
I	(E) 36" GRAB BAR	(E)	(E)	REMAIN IN PLACE	1/AA1.8, 5/AA1.8, 9/AA1.8
J	(E) TOILET SEAT COVER DISPENSER	(E)	(E)	TO BE REMOVED AND SALVAGED FOR REUSE, MOUNT OPERABLE PART 40" MAX. A.F.F.	11/AA1.8
M	(N) SANITARY NAPKIN DISPOSAL	BOBRICK	B-270	MOUNT 19" MIN.A.F.F. TO OPERABLE PART	18/AA1.8

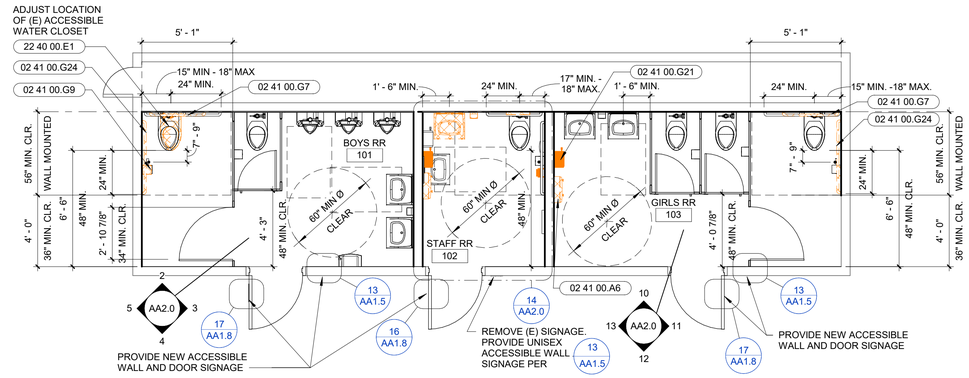

1 FLOOR PLAN-RESTROOMS
1/4" = 1'-0"

RESTROOM PER DSA# 02-107880

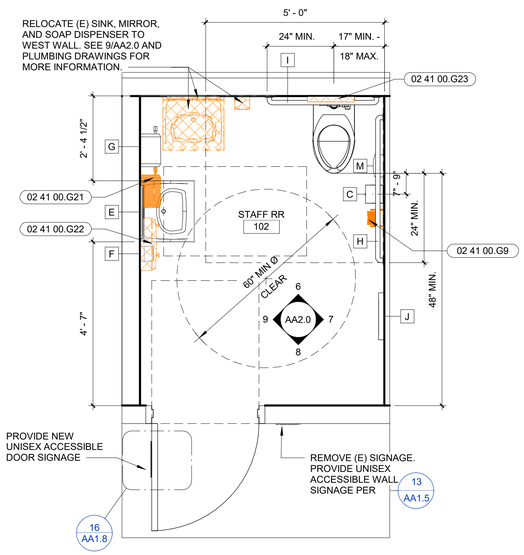

14 STAFF RESTROOM - ENLARGED
1/2" = 1'-0"

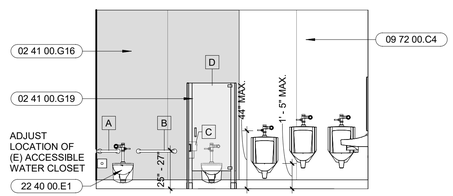

2 BOYS RR NORTH
1/4" = 1'-0"

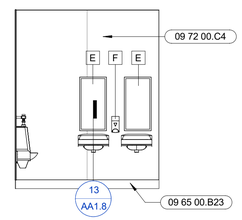

3 BOYS RR EAST
1/4" = 1'-0"

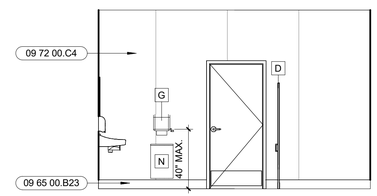

4 BOYS RR SOUTH
1/4" = 1'-0"

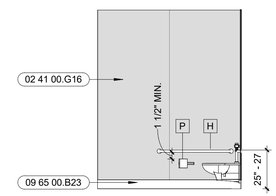

5 BOYS RR WEST
1/4" = 1'-0"

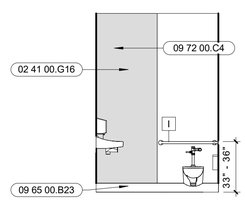

6 STAFF RR NORTH
1/4" = 1'-0"

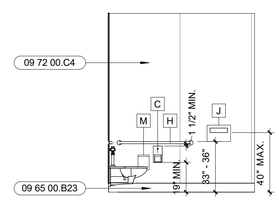

7 STAFF RR EAST
1/4" = 1'-0"

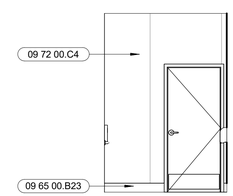

8 STAFF RR SOUTH
1/4" = 1'-0"

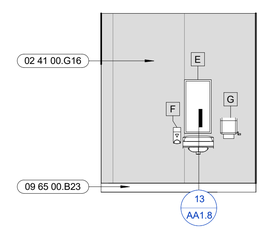

9 STAFF RR WEST
1/4" = 1'-0"

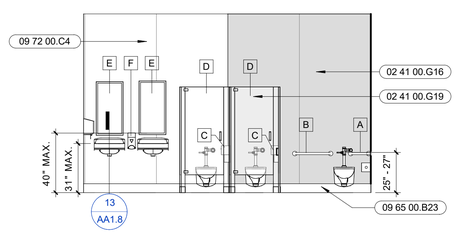

10 GIRLS RR NORTH
1/4" = 1'-0"

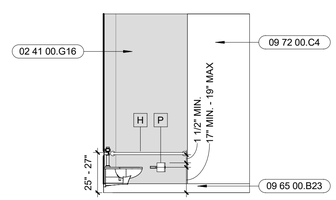

11 GIRLS RR EAST
1/4" = 1'-0"

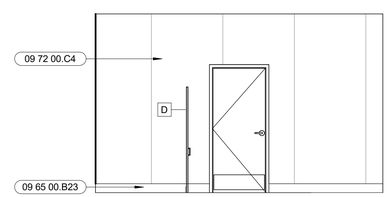

12 GIRLS RR SOUTH
1/4" = 1'-0"

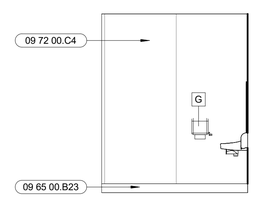

13 GIRLS RR WEST
1/4" = 1'-0"

KEYNOTE LEGEND	
02 41 00.A6	SALVAGE ITEM. RETURN TO OWNER
02 41 00.G7	REMOVE (E) GRAB BAR. PATCH/REPAINT WALL TO MATCH EXISTING
02 41 00.G9	REMOVE (E) TOILET PAPER DISPENSER
02 41 00.G16	REMOVE FULL SHEET OF (E) FRP AND REPLACE W/ (N) FRP TO MATCH EXISTING FOLLOWING INSTALLATION OF BACKING.
02 41 00.G19	TEMPORARILY REMOVE (E) TOILET PARTITION TO ACCESS (E) FRP REMOVAL. RE-INSTALL PARTITION FOLLOWING BACKING INSTALLATION.
02 41 00.G21	REMOVE (E) PAPER TOWEL DISPENSER. REINSTALL SALVAGED (E) TOILET PAPER DISPENSER AT NEW LOCATION.
02 41 00.G22	REMOVE (E) SANITARY NAPKIN DISPENSER. REINSTALL SALVAGED (E) SANITARY NAPKIN DISPENSER AT NEW LOCATION.
02 41 00.G23	REMOVE (E) TOILET SEAT COVER DISPENSER. REINSTALL SALVAGED (E) SEAT COVER DISPENSER AT NEW LOCATION.
02 41 00.G24	REMOVE & SALVAGE (E) GRAB BAR FOR REUSE. PATCH/REPAINT WALL TO MATCH SURROUNDINGS. RE-INSTALL GRAB BAR WITH CENTERLINE AT 33" A.F.F. (ADULT) OR 27" A.F.F. (STUDENT)
09 65 00.B23	(E) 6" COVED EPOXY BASE
09 72 00.C4	(E) FRP WALL TO REMAIN
22 40 00.E1	ACCESSIBLE WATER CLOSET (ELEMENTARY) 15" TO 18" CENTERLINE TO FINISHED FACE OF WALL & 15" TO 17" SEAT HT. A.F.F.

C:\Users\hayal\Documents\Revit_2023\2025-03_Erma B Reese_Bridged Portables_ORIGINAL Ramp_hayalNRD3T.rvt

1/14/2026 9:13:18 AM

IDENTIFICATION STAMP
DIV. OF THE STATE ARCHITECT
APP: 02-123433 INC:
REVIEWED FOR
SS ☑ FLS ☑ ACS ☑
DATE: 01/20/2026

ARCHITECHNICA
555 West Benjamin Holt Drive, Suite 423
Stockton, California 95207
P: (209) 952-5850
F: (209) 952-2442
E: hello@architechnica.net
www.architechnica.net

LICENSED ARCHITECT · TIMOTHY L. DEARBORN · C-29928 · RENEWAL 12 / 2027 · STATE OF CALIFORNIA

© 2026 ARCHITECHNICA

CONSULTANT

ERMA B REESE ELEMENTARY

1800 W ELM ST,
LODI, CA 95242

LODI UNIFIED SCHOOL DISTRICT

REVISIONS

PROJECT NO: 2025-03
ISSUE SET: CD
ISSUE DATE: 12/11/2025
DRAWN BY: HD

RESTROOM FLOOR PLAN AND INTERIOR ELEVATIONS

AA2.0

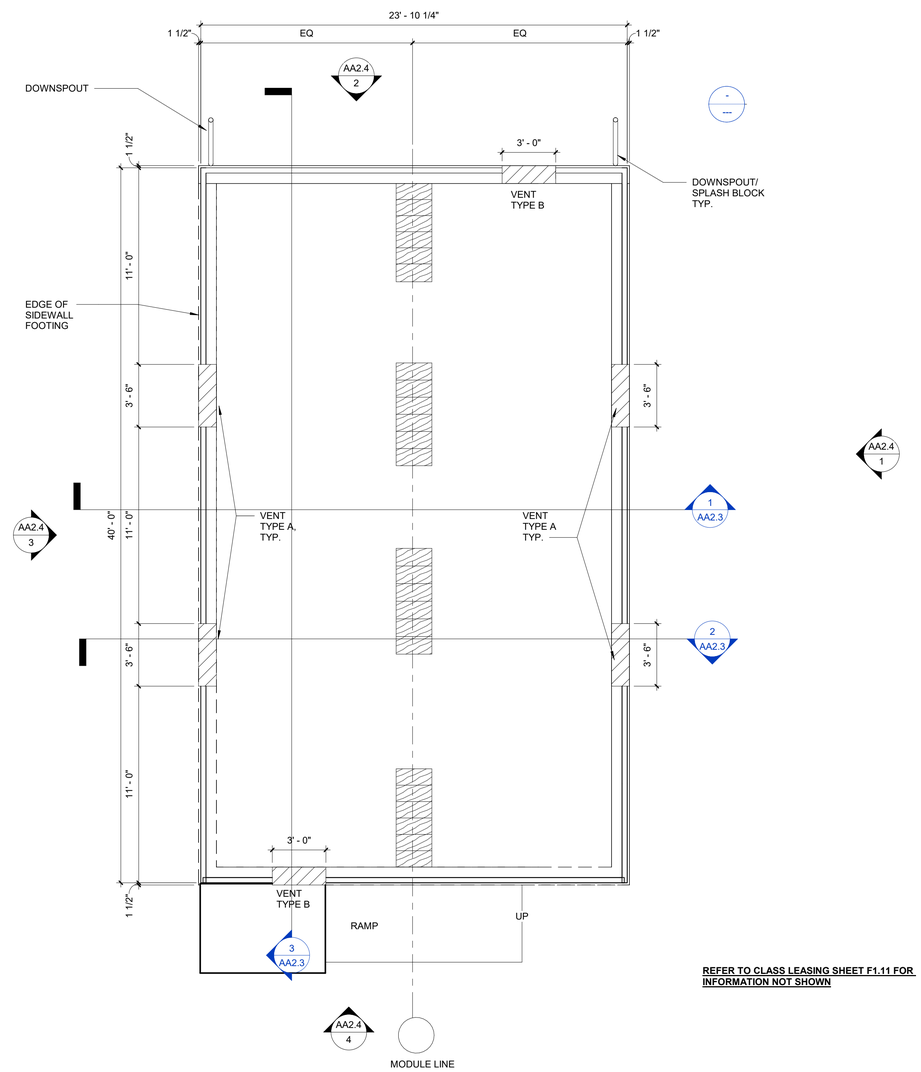

REFER TO CLASS LEASING SHEET F1.11 FOR INFORMATION NOT SHOWN

1 BRIDGE PORTABLES BUILDING - FOUNDATION PLAN
1/4" = 1'-0"

IDENTIFICATION STAMP
DIV. OF THE STATE ARCHITECT
APP: 02-123433 INC:
REVIEWED FOR
SS ☑ FLS ☑ ACS ☑
DATE: 01/20/2026

ARCHITECHNICA
555 West Benjamin Holt Drive, Suite 423
Stockton, California 95207
P: (209) 952-5850
F: (209) 952-2442
E: hello@architechnica.net

www.architechnica.net

LICENSED ARCHITECT
TIMOTHY L. DEARBORN
C-25928
RENEWAL
12 / 2027
STATE OF CALIFORNIA

© 2026 ARCHITECHNICA

CONSULTANT

ROADRUNNERS
ERMA B. REESE ELEMENTARY

ERMA B REESE ELEMENTARY

1800 W ELM ST,
LODI, CA 95242

LODI UNIFIED SCHOOL DISTRICT

REVISIONS

PROJECT NO: 2025-03
ISSUE SET: CD
ISSUE DATE: 12/11/2025
DRAWN BY: HD

BRIDGE PORTABLE FOUNDATION PLAN

AA2.1

C:\Users\haya\Documents\Revit_2023\2025-03_Erma B Reese_Bridged Portables_ORIGINAL Ramp_hayaNRD3T.rvt

1/14/2026 9:13:19 AM

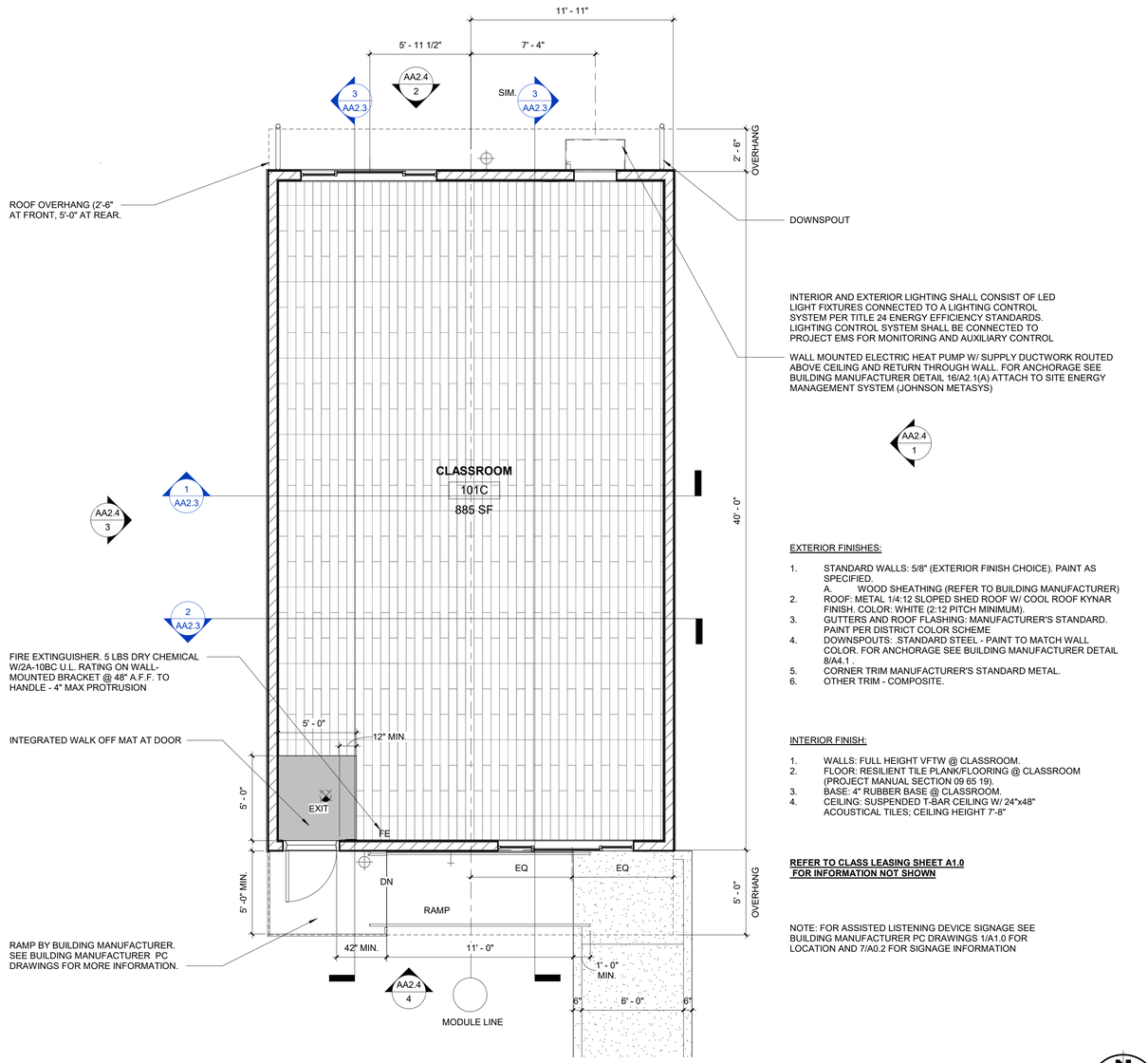

1 BRIDGE PORTABLES BUILDING - FLOOR PLAN
1/4" = 1'-0"

EXTERIOR FINISHES:

1. STANDARD WALLS: 5/8" (EXTERIOR FINISH CHOICE). PAINT AS SPECIFIED.
   A. WOOD SHEATHING (REFER TO BUILDING MANUFACTURER)
2. ROOF: METAL 1/4:12 SLOPED SHED ROOF W/ COOL ROOF KYNAR FINISH. COLOR: WHITE (2:12 PITCH MINIMUM).
3. GUTTERS AND ROOF FLASHING: MANUFACTURER'S STANDARD. PAINT PER DISTRICT COLOR SCHEME
4. DOWNSPOUTS: .STANDARD STEEL - PAINT TO MATCH WALL COLOR. FOR ANCHORAGE SEE BUILDING MANUFACTURER DETAIL 8/A4.1 .
5. CORNER TRIM MANUFACTURER'S STANDARD METAL.
6. OTHER TRIM - COMPOSITE.

INTERIOR FINISH:

1. WALLS: FULL HEIGHT VFTW @ CLASSROOM.
2. FLOOR: RESILIENT TILE PLANK/FLOORING @ CLASSROOM (PROJECT MANUAL SECTION 09 65 19).
3. BASE: 4" RUBBER BASE @ CLASSROOM.
4. CEILING: SUSPENDED T-BAR CEILING W/ 24"x48" ACOUSTICAL TILES; CEILING HEIGHT 7'-8"

REFER TO CLASS LEASING SHEET A1.0 FOR INFORMATION NOT SHOWN

NOTE: FOR ASSISTED LISTENING DEVICE SIGNAGE SEE BUILDING MANUFACTURER PC DRAWINGS 1/A1.0 FOR LOCATION AND 7/A0.2 FOR SIGNAGE INFORMATION

IDENTIFICATION STAMP
DIV. OF THE STATE ARCHITECT
APP: 02-123433 INC:
REVIEWED FOR
SS ☑ FLS ☑ ACS ☑
DATE: 01/20/2026

ARCHITECHNICA
555 West Benjamin Holt Drive, Suite 423
Stockton, California 95207
P: (209) 952-5850
F: (209) 952-2442
E: hello@architechnica.net

www.architechnica.net

LICENSED ARCHITECT · TIMOTHY L. DEARBORN · C-25928 · RENEWAL 12 / 2027 · STATE OF CALIFORNIA

© 2026 ARCHITECHNICA

CONSULTANT

ERMA B REESE ELEMENTARY

1800 W ELM ST,
LODI, CA 95242

LODI UNIFIED SCHOOL DISTRICT

REVISIONS

PROJECT NO: 2025-03
ISSUE SET: CD
ISSUE DATE: 12/11/2025
DRAWN BY: HD

BRIDGE PORTABLE FLOOR PLAN

AA2.2

C:\Users\haya\Documents\Revit_2023\2025-03_Erma B Reese_Bridged Portables_ORIGINAL Ramp_hayaNRD3T.rvt

1/14/2026 9:13:19 AM

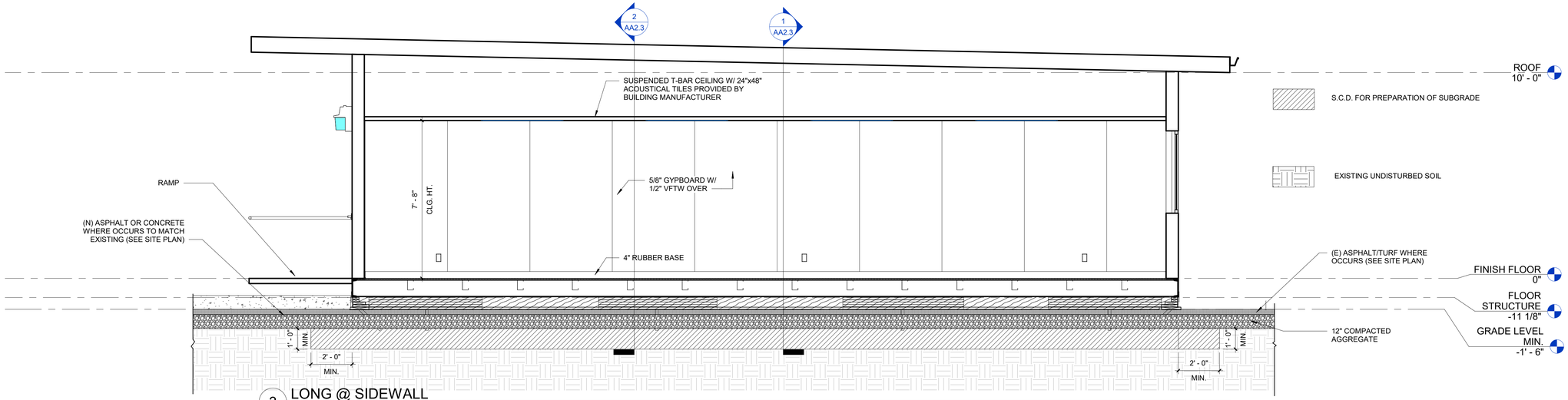

3 LONG @ SIDEWALL
3/8" = 1'-0"

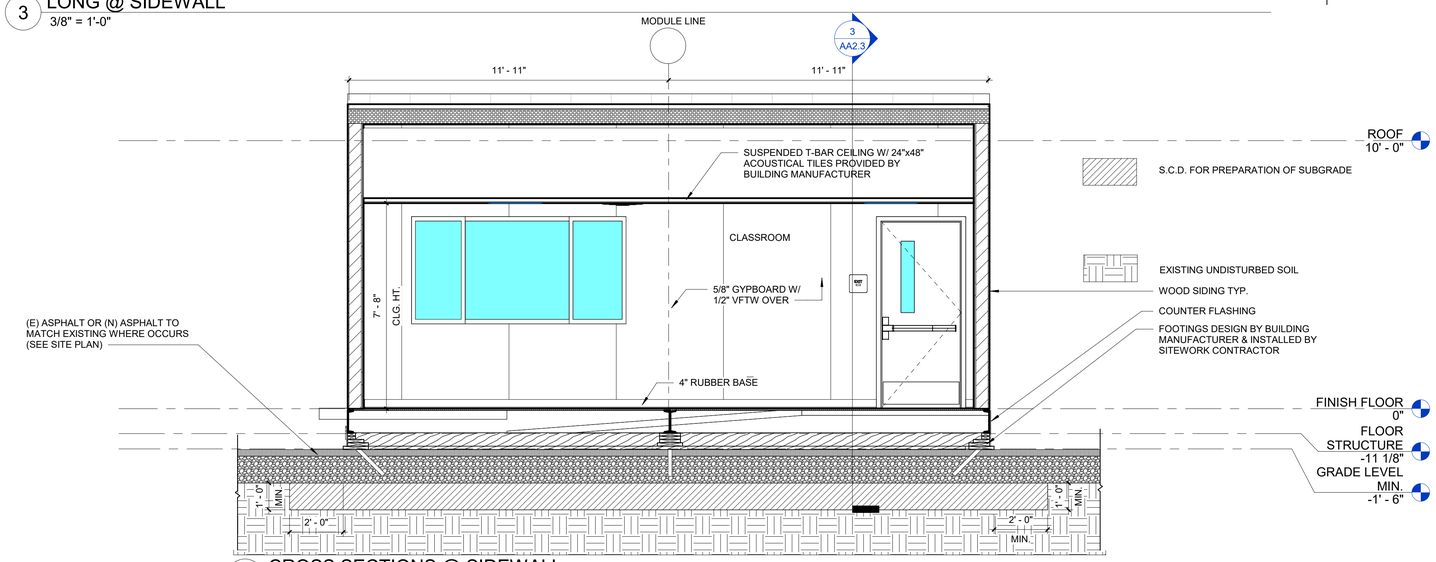

2 CROSS SECTIONS @ SIDEWALL
3/8" = 1'-0"

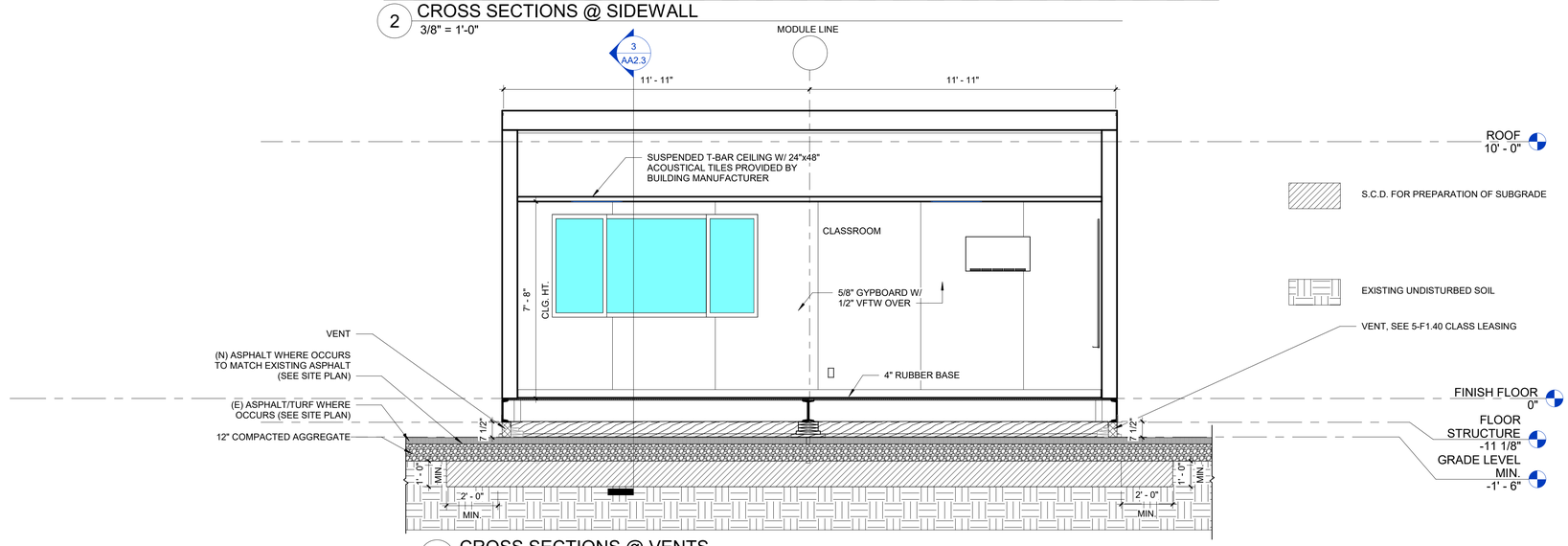

1 CROSS SECTIONS @ VENTS
3/8" = 1'-0"

C:\Users\hayal\Documents\Revit_2023\2025-03_Erma B Reese_Bridged Portables_ORIGINAL Ramp_hayaNRD3T.rvt

1/14/2026 9:13:20 AM

IDENTIFICATION STAMP
DIV. OF THE STATE ARCHITECT
APP: 02-123433 INC:
REVIEWED FOR
SS ☑ FLS ☑ ACS ☑
DATE: 01/20/2026

ARCHITECHNICA
555 West Benjamin Holt Drive, Suite 423
Stockton, California 95207
P: (209) 952-5850
F: (209) 952-2442
E: hello@architechnica.net
www.architechnica.net

LICENSED ARCHITECT
TIMOTHY L. DEARBORN
C-29928
RENEWAL 12 / 2027
STATE OF CALIFORNIA

© 2026 ARCHITECHNICA

CONSULTANT

ERMA B REESE ELEMENTARY

1800 W ELM ST,
LODI, CA 95242

LODI UNIFIED SCHOOL DISTRICT

REVISIONS

PROJECT NO: 2025-03
ISSUE SET: CD
ISSUE DATE: 12/11/2025
DRAWN BY: HD

BRIDGE PORTABLE SECTIONS

AA2.3

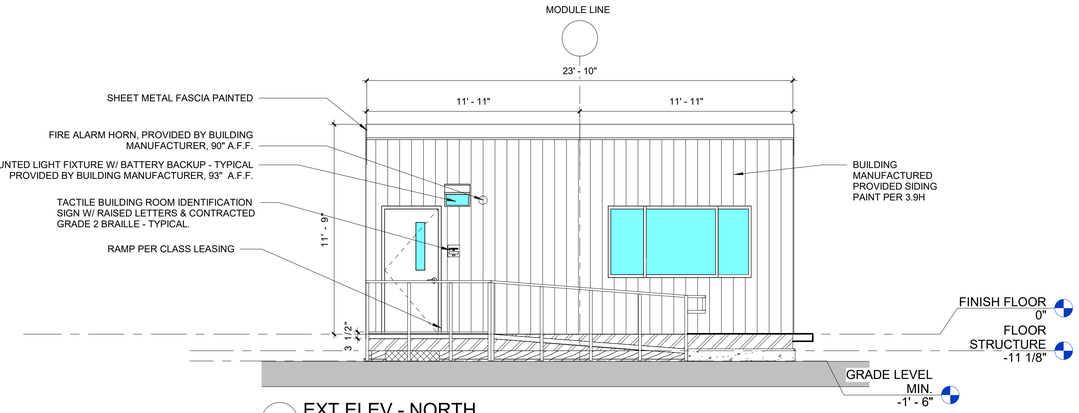

4 EXT ELEV - NORTH
1/4" = 1'-0"

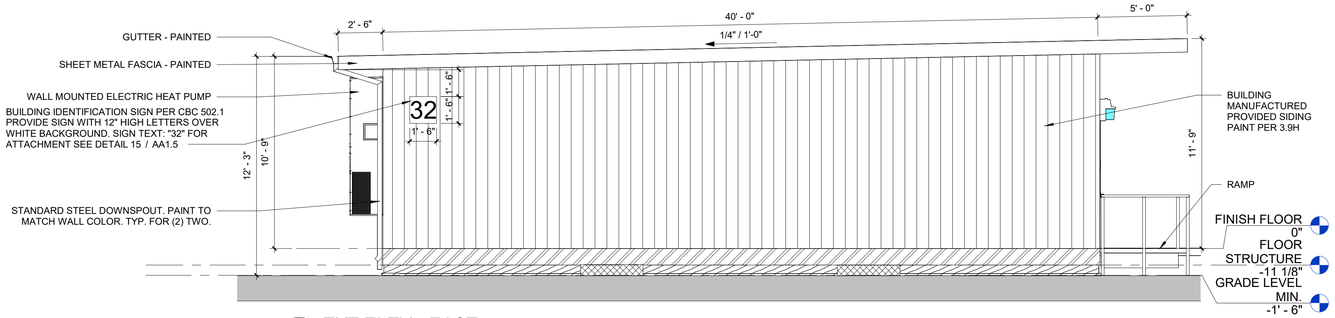

3 EXT ELEV - EAST
1/4" = 1'-0"

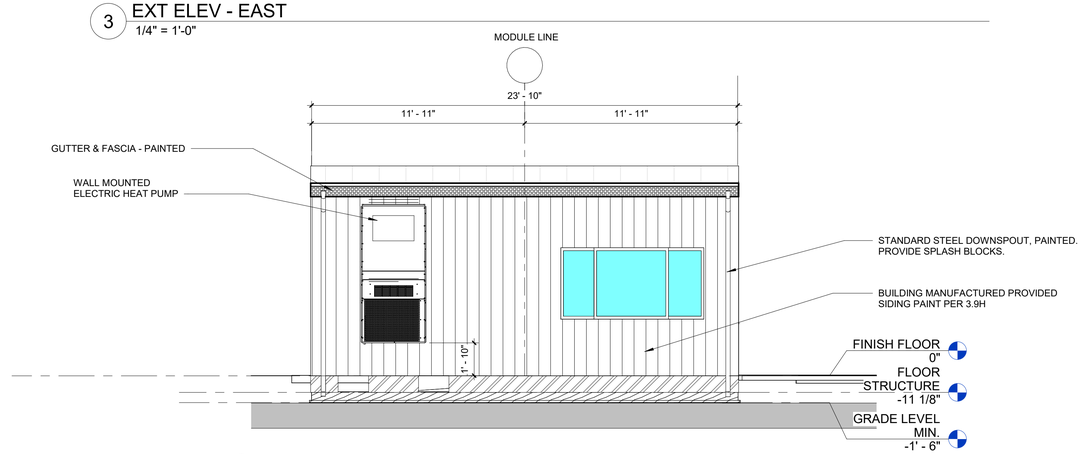

2 EXT ELEV - SOUTH
1/4" = 1'-0"

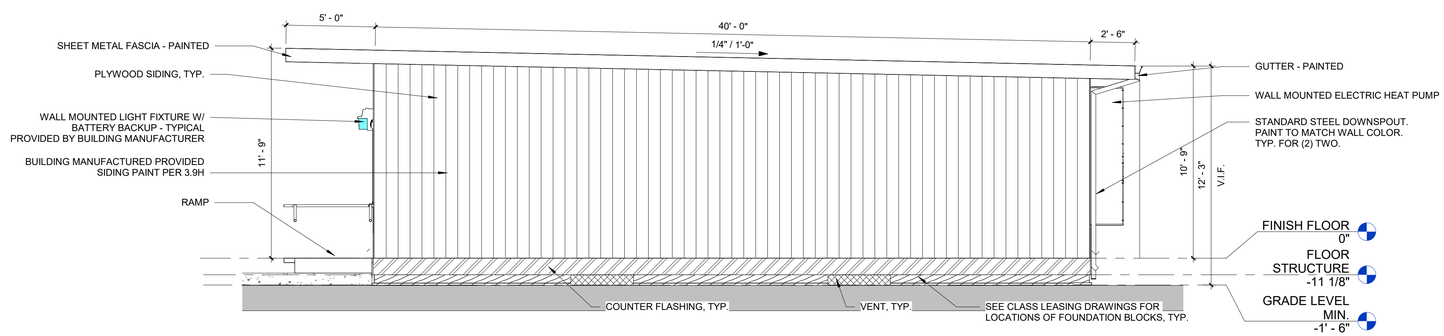

1 EXT ELEV - WEST
1/4" = 1'-0"

IDENTIFICATION STAMP
DIV. OF THE STATE ARCHITECT
APP: 02-123433 INC:
REVIEWED FOR
SS ☑ FLS ☑ ACS ☑
DATE: 01/20/2026

ARCHITECHNICA
555 West Benjamin Holt Drive, Suite 423
Stockton, California 95207
P: (209) 952-5850
F: (209) 952-2442
E: hello@architechnica.net
www.architechnica.net

LICENSED ARCHITECT · TIMOTHY L. DEARBORN · C-25928 · RENEWAL 12 / 2027 · STATE OF CALIFORNIA

© 2026 ARCHITECHNICA

CONSULTANT

ROADRUNNERS
ERMA B. REESE ELEMENTARY

ERMA B REESE ELEMENTARY

1800 W ELM ST,
LODI, CA 95242

LODI UNIFIED SCHOOL DISTRICT

REVISIONS

PROJECT NO: 2025-03
ISSUE SET: CD
ISSUE DATE: 12/11/2025
DRAWN BY: HD

BRIDGE PORTABLE EXTERIOR ELEVATIONS

AA2.4

C:\Users\hayal\Documents\Revit_20232025-03_Erma B Reese_Bridged Portables_ORIGINAL Ramp_hayalNRD3T.rvt

1/14/2026 9:13:21 AM

260500 ELECTRICAL WORK FOR COMMON RESULTS:

1. ELECTRICAL INSTALLATION SHALL COMPLY WITH TITLE 24, CALIFORNIA CODE OF REGULATIONS, INCLUDING THE FOLLOWING:
TITLE 24, CCR, PART 2, 2022 CBC
TITLE 24, CCR, PART 3, 2022 CEC
TITLE 24, CCR, PART 4, 2022 CMC
TITLE 24, CCR, PART 9, 2022 CFC
TITLE 24, CCR, PART 6, 2022 CALIFORNIA ENERGY CODE
TITLE 24, CCR, PART 11, 2022 CALIFORNIA GREEN BUILDING STANDARDS CODE
ALL APPLICABLE LOCAL CODES

2. ELECTRICAL CONTRACTOR SHALL VERIFY POWER, TELEPHONE AND CABLE TV SERVICES AT SITE PRIOR TO BIDDING. SERVICES TO CONFORM TO UTILITY COMPANY REQUIREMENTS. ELECTRICAL CONTRACTOR SHALL ARRANGE FOR SERVICE INSTALLATIONS PER UTILITY C.OMPANY REQUIREMENTS AND PAY ALL CUSTOMER CHARGED SERVICE COSTS. COORDINATE WITH OWNER AND UTILITY COMPANY FOR SERVICE INSTALLATION.

3. CONTRACTOR SHALL PROCURE AND PAY FOR ALL PERMITS, LICENSES, ETC. REQUIRED TO CARRY ON AND COMPLETE THE WORK.

4. PROVIDE ALL LABOR, MATERIALS, TOOLS, PLANT EQUIPMENT, TRANSPORTATION AND PERFORM ALL OPERATIONS NECESSARY FOR ANY REASONABLE INCIDENTAL TO PROPER EXECUTION AND COMPLETION OF ALL "ELECTRICAL WORK" WHETHER SPECIFICALLY MENTIONED OR NOT; ALL AS INDICATED, SPECIFIED HEREIN, AND/OR IMPLIED THEREBY TO CARRY OUT THE APPARENT INTENT THEREOF.

5. ALL MATERIALS SHALL BE NEW AND LISTED WITH THE UNDERWRITERS' LABORATORIES, INC., SHALL MEET THEIR REQUIREMENTS AND SHALL BEAR THEIR LABEL WHEREVER STANDARDS HAVE BEEN ESTABLISHED AND LABEL SERVICE IS REGULARLY FURNISHED BY THAT AGENCY.

6. ELECTRICAL DRAWINGS ARE ESSENTIALLY DIAGRAMMATIC AND ALTHOUGH THE SIZE AND LOCATIONS OF EQUIPMENT ARE SHOWN TO SCALE WHEREVER POSSIBLE, CONTRACTOR SHALL MAKE USE OF ALL DATA IN ALL CONTRACT DOCUMENTS AND VERIFY THIS INFORMATION AT THE SITE. CONTRACTOR SHALL BE RESPONSIBLE FOR LAYING OUT AND INSTALLING HIS WORK TO AVOID INTERFERENCE WITH OTHER TRADES.

7. WORK SHOWN ON THE DRAWINGS TO BE INSTALLED UNDERGROUND SHALL BE INSTALLED AT LEAST 24" BELOW GRADE UNLESS OTHERWISE NOTED. BACKFILL IN 6" THICK, PROPERLY MOISTENED LAYERS, SOLIDLY PACKED AND IRON TAMPED TO A DENSITY NOT LESS THAN THAT OF ADJACENT, UNDISTURBED EARTH. RESTORE SURFACES, ROADWAYS, WALKS, CURBS, WALLS AND EXISTING UNDERGROUND INSTALLATIONS TO ORIGINAL CONDITION IN AN ACCEPTABLE MANNER.

8. ALL ELECTRICAL EQUIPMENT EXPOSED TO THE WEATHER SHALL BE LISTED FOR EXTERIOR USE.

9. ALL U.L. LISTED EQUIPMENT SHALL BE INSTALLED AS PER THEIR LISTING OR LABELING.

10. IN LOCATIONS WHERE ELECTRICAL EQUIPMENT WOULD BE EXPOSED TO PHYSICAL DAMAGE, ENCLOSURES OR GUARDS SHALL BE SO ARRANGED AND OF SUCH STRENGTH AS TO PREVENT SUCH DAMAGE.

11. CONFLICTS BETWEEN SPECIFICATIONS AND PLANS:

a. ANY CONFLICT BETWEEN ELECTRICAL SPECIFICATIONS AND ELECTRICAL PLANS; OR BETWEEN ELECTRICAL PLANS AND PLANS OF ANOTHER DISCIPLINE SHALL BE BROUGHT TO THE ATTENTION OF THE ENGINEER AND A RESOLUTION RECEIVED PRIOR TO PROCUREMENT OR INSTALLATION OF THE ITEM IN QUESTION.

b. IF THE CONTRACTOR PROCEEDS WITH THE WORK WITHOUT RECEIVING ANY RESOLUTION TO THE CONFLICT HE/SHE DOES SO AT HIS/HER OWN RISK AND SHALL RECTIFY THE WORK TO THE SATISFACTION OF THE ENGINEER AT NO ADDITIONAL COST TO THE OWNER OR ENGINEER.

260500.02 SUBMITTALS:

1. PROVIDE THE FOLLOWING SUBMITTALS FOR REVIEW AND APPROVAL. EACH SHALL BE SUBMITTED SEPARATELY TO AVOID DELAYS IN THE REVIEW OF ONE SUBMITTAL IN HOLDING UP REVIEW OF THE REMAINDER.

a. BASIC ELECTRICAL MATERIALS
b. LIGHT FIXTURES
c. FIRE ALARM
d. COMMUNICATIONS EQUIPMENT

260500.03 WORKING CLEARANCES FOR ELECTRICAL SWITCHGEAR:

1. PROVIDE WORKING SPACES FOR ELECTRICAL PANELS AND SWITCHGEAR TO COMPLY WITH CEC 110.26.

2. ELECTRICAL CONTRACTOR SHALL COORDINATE WITH ALL TRADES INVOLVED TO ENSURE THE CLEARANCES REQUIRED BY ITEM 1 ABOVE ARE PROVIDED.

260526 GROUNDING:

1. GROUND AND BOND ALL EQUIPMENT AS REQUIRED BY GOVERNING CODES AND SPECIFICALLY INCLUDING SWITCHBOARD, PANELBOARDS, MOTOR CASES, METAL PIPING SYSTEMS, STRUCTURAL STEEL, ETC.

2. PROVIDE GROUND WIRES IN ALL FEEDERS AND BRANCH CIRCUITS, SIZE PER CEC TABLE 250.122

3. ALL GROUND WIRES SHALL BE INSULATED GROUND WIRES.

260529 INSTALLATION OF SUPPORT SYSTEMS

1. RACEWAYS, CABLE ASSEMBLIES, BOXES, CABINETS, AND FITTINGS SHALL BE SECURELY FASTENED IN PLACE PER CEC ARTICLE 300.11. SUPPORT WIRES THAT DO NOT PROVIDE SECURE SUPPORT SHALL NOT BE PERMITTED AS THE SOLE SUPPORT. SUPPORT WIRES AND ASSOCIATED FITTINGS THAT PROVIDE SECURE SUPPORT AND THAT ARE INSTALLED IN ADDITION TO THE CEILING GRID SUPPORT WIRES SHALL BE PERMITTED AS THE SOLE SUPPORT. WHERE INDEPENDENT SUPPORT WIRE ARE USED, THEY SHALL BE SECURED AT BOTH ENDS. CABLES AND RACEWAYS SHALL NOT BE SUPPORTED BY CEILING GRIDS.

2. FURNISH ALL NECESSARY FOUNDATIONS, SUPPORTS, BACKING, ETC., FOR ALL ELECTRICAL ENCLOSURES, CONDUITS AND EQUIPMENT.

3. ATTACH ALL BOXES, CABINETS, ETC. TO WOOD WITH WOOD OR LAG SCREWS, TO METAL WITH MACHINE SCREWS OR BOLTS AND TO CONCRETE WITH EXPANSION ANCHORS AND MACHINE SCREWS OR BOLTS.

2. RIGID STEEL CONDUIT SHALL BE SUPPORTED AT INTERVALS NOT GREATER THAN 10 FT, ELECTRICAL METALLIC TUBING AT INTERVALS NOT GREATER THAN 5 FT.

3. A SUPPORT SHALL BE PROVIDED NOT MORE THAN 3 FT. FROM ANY CHANGE IN DIRECTION. ADDITIONAL SUPPORTS TO THOSE SPECIFIED ABOVE SHALL BE INSTALLED WHERE REQUIRED TO SUIT JOB CONDITIONS AND TO PROVIDE A SECURE INSTALLATION. ALL HANGERS AND SUPPORTS SHALL BE THE PRODUCTS OF ONE MANUFACTURER.

260533 PULL OR JUNCTION BOXES:

1. INSTALL WHERE INDICATED, OR AS REQUIRED BY CODE, PULL BOXES AND JUNCTION BOXES OF SUFFICIENT SIZE AND CAPACITY TO FACILITATE ALL WIRING. BOXES SHALL BE SIZED TO PROPERLY ACCOMMODATE ALL CONDUCTORS ENTERING SAME.

2. BOXES SHALL BE OF THE SHAPE AND SIZE BEST SUITED FOR THE PARTICULAR APPLICATION AND SHALL BE SUPPORTED DIRECTLY TO STRUCTURAL MEMBERS, FRAMING OR BLOCKING BY MEANS OF SCREWS, ANCHORS, BOLTS OR EMBEDDED IN MASONRY.

A. SWITCH AND RECEPTACLE BOX SHALL BE ONE PIECE DRAWN OR STAMPED STEEL BOXES MINIMUM SIZE SHALL BE FOUR INCHES (4") SQUARE. BOXES SHALL BE FITTED WITH FLUSH DEVICE COVERS, PLASTER RINGS, OR TILE SWITCH RINGS IN MASONRY IN AREA WHERE EXPOSED WIRING IS PERMISSIBLE, BOXES SHALL BEFITTED WITH SURFACE TYPE COVERS.

D. WEATHERPROOF BOXES SHALL BE APPLETON FD SERIES AND FITTED WITH GASKETED CAST COVERS.

E. VOICE/DATA OUTLET BOXES SHALL BE 4_11/16"SQ.x2_1/8" DEEP MINIMUM, FITTED WITH PLASTER RINGS.

F. BOXES FOR SPECIAL EQUIPMENT SHALL BE SUITABLE FOR THE PARTICULAR EQUIPMENT.

G. BOXES SHALL BE LOCATED AND PLACED ACCORDING TO ARCHITECTURAL AND STRUCTURAL REQUIREMENTS.

260550 WIRING METHODS: LINE VOLTAGE SYSTEMS (120V AND ABOVE):

1. ALL WIRING SHALL BE INSTALLED IN CONDUITS. CONDUITS SHALL BE RUN CONCEALED IN WALLS AND CEILINGS WHERE FEASIBLE. ALL CONDUITS INSTALLED SURFACE ON WALL SHALL BE PAINTED TO MATCH WALL FINISH. MOUNT EXTERIOR CONDUITS ON WALL ON GALVANIZED UNISTRUTS. ALL SURFACE CONDUIT INSTALLATION/ RUNS SHALL BE APPROVED BY THE ARCHITECT PRIOR TO INSTALLATION.

2. ALL CONDUITS RUN WITHIN INTERIOR FINISHED SPACES SUCH AS OFFICES, BREAKROOM, RESTROOM ETC. SHALL BE RUN CONCEALED.

3. ALL CONDUITS RUN IN DEDICATED ELECTRICAL AND MECHANICAL ROOMS SHALL BE RUN EXPOSED.

4. MINIMUM CONDUIT SIZE SHALL BE 1/2" ABOVE GRADE AND 3/4" UNDERGROUND.

5. MINIMUM ACCEPTABLE CONDUITS ARE:

A. GALVANIZED RIGID STEEL - FOR USE ON:
(1) EXTERIOR WALL SURFACES.

B. GALVANIZED STEEL EMT FOR USE:
(1) CONCEALED IN INDOOR FINISHED SPACES.
(2) EXPOSED INSIDE ELECTRICAL & MECHANICAL ROOMS.

C. LIQUID TIGHT STEEL FLEX:
(1) FOR FINAL CONNECTION TO OUTDOOR EQUIPMENT. LENGTH SHALL NOT EXCEED 36".

D. FLEXIBLE STEEL CONDUIT:
(1) FOR INDOOR FINAL CONNECTION TO RECESSED LIGHT FIXTURES. LENGTH SHALL NOT EXCEED 72".
(2) FOR INDOOR FINAL CONNECTION TO HVAC EQUIPMENT. LENGTH SHALL NOT EXCEED 36".

E. "PVC" SCHEDULE 40:
(1) FOR CONDUITS RUN UNDERGROUND AND FOR UNDER BUILDING SLAB.
(2) CONDUIT STUBUPS THROUGH THE FLOOR OR GRADE SHALL BE IN PVC WRAPPED RIGID STEEL CONDUIT. PVC WRAPPING SHALL EXTEND 6" ABOVE FINISHED FLOOR OR GRADE.
(3) NOT PERMITTED FOR WIRING ABOVE FINISHED FLOOR INSIDE BUILDINGS

F. ALUMINUM CONDUITS, IMC CONDUITS OR ALUMINUM FITTINGS ARE NOT APPROVED FOR USE ON THIS PROJECT.

G. ALL CONDUIT FITTINGS SHALL BE MALLEABLE IRON/STEEL.

H. COUPLING:
(1) EMT COUPLING - APPLETON TWC-CS SERIES
(2) EMT CONNECTOR - APPLETON TW-CSI SERIES
(3) FLEX CONDUIT CONNECTOR - T&B "TITE BITE", INSULATED
(4) LIQUID TIGHT FLEX CONDUIT CONNECTOR - APPLETON "STB" SERIES UP TO 2", "ST" SERIES OVER 2".

I. RIGID STEEL CONDUIT CONNECTED TO BOXES AND CABINETS SHALL BE FITTED WITH TWO LOCKNUTS AND INSULATING BUSHING, OA "A" SERIES. PROVIDE GROUNDING BUSHING OZ "BL" SERIES WHERE LOCKNUTS AND BUSHING IS NOT USED. CONDUITS CONNECTED TO BOXES EXPOSED TO WEATHER/MOISTURE SHALL BE FITTED WITH WATERTIGHT SEALING HUBS OF STEEL OR MALLEABLE IRON WITH SEALING RING AND INSULATED THREAT, T & B 370 SERIES.

J. TYPE NM AND NMC CABLES SHALL NOT BE USED ON THIS PROJECT.

6. CONDUCTORS SHALL BE COPPER CONDUCTORS TYPE THHN/THWN UNLESS OTHERWISE NOTED OR REQUIRED BY CODE.

7. ALL DEVICES, CONDUITS, RACEWAYS AND CABLES SHOWN ARE NEW TO BE PROVIDED UNLESS OTHERWISE NOTED.

8. FLASH AND COUNTERFLASH ALL ITEMS PASSING THROUGH THE ROOF.

9. THE OWNER RESERVES THE RIGHT TO RELOCATE ALL LIGHTING, OUTLETS AND SWITCHES BEFORE THEY ARE ROUGHED IN AT NO EXTRA COST.

10. SEPARATION OF WIRING OF DIFFERENT VOLTAGE CLASSIFICATIONS:

A. WIRING FOR DIFFERENT VOLTAGE CLASSIFICATIONS SHALL BE INSTALLED IN ENTIRELY SEPARATE RACEWAYS/CONDUITS SYSTEM AND ENCLOSURES/BOXES.

CLASSIFICATION 1 - 0 TO 30V
CLASSIFICATION 2 - 100 TO 250V
CLASSIFICATION 3 - 251 TO 500V

B. PARTICULAR ATTENTION SHALL BE PAID TO THE WIRING FOR

1. ROOF TOP CONVENIENCE OUTLETS FOR SERVICING ROOF TOP EQUIPMENT.

2. LINE VOLTAGE CONTROLS FOR ROOF TOP HVAC AND OTHER REQUIREMENTS.

C. DISCONNECTS SHALL NOT BE USED AS THROUGH RACEWAYS FOR WIRING NOT DIRECTLY SERVING THE DISCONNECTS. SERVICING OUTLETS SHALL NOT BE MOUNTED ON DISCONNECTS.

260551 INSTALLATION OF RACEWAYS AND FITTINGS

1. CONCEAL RACEWAYS WITHIN CEILINGS, WALLS, AND FLOORS EXCEPT WHERE EXPOSED RACEWAYS ARE SPECIFICALLY PERMITTED.

2. WHERE CONDUIT IS ALLOWED TO BE EXPOSED, INSTALL THE CONDUIT PARALLEL WITH OR AT RIGHT ANGLES TO STRUCTURAL MEMBERS, WALLS, AND LINES OF THE BUILDING.

3. INSTALL WHERE INDICATED, OR AS REQUIRED BY CODE, PULLBOXES AND JUNCTION BOXES OF SUFFICIENT SIZE TO FACILITATE WIRING. BOXES SHALL BE SIZED TO PROPERLY ACCOMMODATE ALL CONDUCTORS ENTERING SAME.

4. DO NOT INSTALL CONDUIT OR TUBING WHICH HAS BEEN CRUSHED OR DEFORMED.

5. RUN CONDUCTORS OF SAME CIRCUIT IN SAME CONDUIT. RUN CONDUCTORS OF DIFFERENT VOLTAGE SYSTEMS IN SEPARATE CONDUITS.

6. INSTALL NO CONDUCTORS UNTIL WORK WHICH MIGHT CAUSE DAMAGE TO SUCH CONDUCTORS OR THE CONDUIT HAS BEEN COMPLETED.

7. KEEP ALL CONDUITS AT LEAST SIX INCHES AWAY FROM THE COVERING ON HOT WATER OR STEAM PIPES.

8. CAP RACEWAY ENDS DURING CONSTRUCTION. CLEAN OR REPLACE CONDUITS IN WHICH WATER OR FOREIGN MATTER HAVE ACCUMULATED, TO THE SATISFACTION OF THE ARCHITECT.

9. CONDUITS SHALL BE SUPPORTED WITH STRAPS, WITH GALVANIZED MALLEABLE SPLIT RING AND ROD FOR INDIVIDUAL RUNS OR WITH KINDORF OR UNISTRUT CHANNEL SUPPORTS FOR MULTIPLE RUNS. DISTANCE BETWEEN SUPPORTS SHALL NOT EXCEED 10 FEET. CONDUITS SHALL BE SUPPORTED INDEPENDENTLY OF ONE ANOTHER.

10. CONDUITS CONNECTED TO BOXES AND CABINETS SHALL BE FITTED WITH TWO LOCKNUTS AND INSULATED BUSHING, OA "A" SERIES.

11. CONDUITS NOT CONNECTED WITH LOCKNUTS AND BUSHINGS SHALL BE FITTED WITH GROUNDING BUSHING, OZ "BL" SERIES, U. L. APPROVED AND BONDED.

12. CONDUIT STRAPS FOR INDIVIDUAL RUNS SHALL BE SECURED BY TOGGLE BOLTS ON HOLLOW MASONRY, EXPANSION ANCHORS ON SOLID CONCRETE OR MASONRY, MACHINE SCREWS OR BOLTS ON METAL SURFACES AND WOOD SCREWS ON WOOD CONSTRUCTION. THE USE OF NAILS TO ANCHOR STRAPS ON WOOD CONSTRUCTION IS PROHIBITED. STRAPS SHALL BE TWO HOLE MALLEABLE IRON OR SNAP-TYPE STEEL WITH RIBBED BACK, GALVANIZED OR CADMIUM PLATED. THE USE

13. PLACEMENT OF ALL BOXES SHALL BE GOVERNED BY APPLICABLE ARCHITECTURAL AND STRUCTURAL REQUIREMENTS.

14. CONDUIT FITTINGS: EXCEPT WHERE OTHERWISE NOTED, CONDUIT FITTINGS SHALL BE APPLETON OR APPROVED EQUAL. UNILETS SHALL BE MALLEABLE IRON AND FITTED WITH COVERS AND GASKETS.

15. TELEPHONE AND SIGNAL CONDUIT BENDS WHERE REQUIRED SHALL HAVE A RADIUS OF TEN TIMES THE CONDUIT TRADE SIZE.

16. PROVIDE PULL TAPE IN ALL EMPTY CONDUITS.

260553 NAMEPLATES & IDENTIFICATION:

1. INSTALL ENGRAVED NAMEPLATES FOR EACH PANELBOARD, CABINET, DISCONNECT, ETC. NAMEPLATES SHALL BE SECURELY FASTENED TO THE EQUIPMENT WITH #4 PHILLIPS ROUND HEAD CADMIUM PLATED SELF-TAPPING SCREWS, BRASS BOLT.

2. PROVIDE CIRCUIT LABEL INDICATING PANEL AND CIRCUIT NUMBER ON EACH COVERPLATE FOR EACH RECEPTACLE AND LIGHT SWITCH, MOTION SENSOR SWITCH. SUCH LABEL SHALL BE SELF ADHESIVE WHITE TAPE WITH BLACK LETTERS MADE ON A LABEL MAKER.

3. ALL CONTROLLED RECEPTACLES SHALL BE PERMANENTLY MARKED TO DIFFERENTIATE THEM FROM UNCONTROLLED RECEPTACLES PER CALIFORNIA ENERGY CODE SECTION 130.5(d)(3).

260573 ARC FLASH HAZARDS:

1. PROVIDE WARNING LABEL ON ELECTRICAL EQUIPMENT OF POSSIBLE ARC FLASH HAZARDS PER C.E.C. 110.16.

262200 TRANSFORMERS:

1. TRANSFORMERS SHALL BE DRY TYPE LOW LOSS TRANSFORMERS TYPE AS MANUFACTURED BY SQUARE D OR APPROVED EQUAL THE SAME MANUFACTURER AS THE MAIN SERVICE SWITCHBOARD.

2. TRANSFORMERS SHALL BE THREE PHASE, FOUR WIRE OR SINGLE PHASE, THREE WIRE, WITH KVA RATING AND VOLTAGES AS INDICATED ON THE PLANS. PROVIDE FULL CAPACITY, OFF LOAD PRIMARY TAPS.

3. TRANSFORMERS SHALL BE 150 DEGREES C TEMPERATURE RISE ABOVE 40 DEGREE C AMBIENT. INSULATION SHALL BE IN ACCORDANCE WITH THE LATEST NEMA STANDARDS FOR A 220 DEGREE C UL COMPONENT RECOGNIZED INSULATION SYSTEM.

4. TRANSFORMER COILS SHALL BE COPPER OR ALUMINUM AND OF THE CONTINUOUS WIRE WOUND CONSTRUCTION AND SHALL BE IMPREGNATED WITH NON-HYGROSCOPIC THERMO SETTING VARNISH. TRANSFORMER CORES SHALL BE CONSTRUCTED FROM HIGH GRADE, NON-AGING SILICON STEEL WITH MAGNETIC PERMEABILITY AND LOW LOSSES.THE COMPLETE CORE AND COIL ASSEMBLY SHALL BE SUITABLY CLAMPED AND BRACED MECHANICALLY. ADDITIONALLY, PROVIDE AN ELECTROSTATIC SHIELD ENVELOPING THE FULL HEIGHT OF THE WINDING IN CASE OF SHIELDED TRANSFORMERS.

5. TRANSFORMERS SHALL BE IN HEAVY GAUGE, SHEET STEEL, VENTILATED ENCLOSURE PER UL, NEMA AND CEC STANDARDS EXCEPT ONES CALLED OUT ON THE PLANS TO HAVE NON-VENTILATED ENCLOSURES.

6. TRANSFORMER SOUND LEVELS SHALL NOT EXCEED 45dB FOR UNITS UP TO 50KVA AND 50dB FOR UNITS 51 TO 150KVA.

7. TRANSFORMERS SHALL BE SUITABLE FOR FLOOR OR WALL MOUNTING AS INDICATED ON THE DRAWINGS.

8. TRANSFORMERS FOR OUTDOORS INSTALLATION SHALL BE WEATHERPROOF. PROVIDE WEATHER SHIELDS WHERE SO REQUIRED.

9. FASTEN TRANSFORMERS TO BUILDING STRUCTURE (WALL OR FLOOR AS CASE MAY BE) USING EXPANSION ANCHORS. PROVIDE BRACKETS AND ALL MOUNTING HARDWARE AS NEEDED.

10. PROVIDE MINIMUM CLEARANCE FROM WALLS AT THE BACK FOR VENTILATION AIR. SUCH CLEARANCES SHALL BE AS REQUIRED BY THE MANUFACTURER.

11. PROVIDE CONCRETE PAD (FOR GRADE MOUNTING) OR PLATFORM (FOR ROOF AND ATTIC SPACE MOUNTING). ROOF PLATFORM DESIGN SHALL BE COMPATIBLE ROOF SYSTEM.

12. FOR ROOF MOUNTING, SEAL ALL ANCHOR BOLTS WITH SILICON SEALER.

13. CONDUITS FOR TRANSFORMER CONNECTIONS SHALL BE LOCATED WITHIN THE FOOTPRINT OF THE UNITS AS FAR AS PRACTICAL.

14. CLEAN ALL DEBRIS FROM WITHIN THE TRANSFORMER.

262726 WIRING DEVICES:

1. UNITS SHALL BE EQUAL TO THE DEVICES SET FORTH HEREIN, IN STANDARD COLORS (BROWN, WHITE, GREY, BEIGE OR IVORY) AS SELECTED BY THE ARCHITECT:

A. WIRING DEVICES	LEVITON #	HUBBELL #	P & S #
SINGLE POLE SWITCH, 15A	1201-2	HBL1201	PS15AC1
DOUBLE POLE SWITCH, 15A	1202-2	HBL1202	PS15AC2
THREE WAY SWITCH, 15A	1203-2	HBL1203	PS15AC3
DUPLEX CONV. OUTLET, 15A	5262	HBL5262	5262
DUPLEX CONV. OUTLET, 20A	5362	HBL5362	5362
DUPLEX CONV. GFI OUTLET, 15A	6599	GF15	1595L
DUPLEX CONV. GFI OUTLET, 20A	6899	GF15	2095L

2. THE CONTROLLED OUTLET SHALL HAVE PERMANENT UNIQUE MARKING PROVIDED BY THE MANUFACTURER OF THE RECEPTACLE.

3. THE MOUNTING HEIGHTS OF LIGHT SWITCHES, RECEPTACLES AND CONTROLS SHALL BE MAXIMUM 48" MEASURED TO THE TOP OF BOXES OR MINIMUM 16" TO THE BOTTOM OF BOXES. SEE "LEGEND" FOR ACTUAL MOUNTING HEIGHTS OF DEVICES. VERIFY HEIGHT WITH ARCHITECT WHERE AN ACTUAL MOUNTING HEIGHT IS NOT CALLED OUT ON PLANS.

4. SINGLE RECEPTACLE SERVED BY INDIVIDUAL 20A BRANCH CIRCUIT DEDICATED TO THE OUTLET SHALL BE 20A RATED PER CEC 210.21(B)(1). ALL OTHERS SHALL BE 15A RATED.

5. ALL 15A AND 20A, 120V OUTLETS IN KITCHEN SHALL BE GFCI PER CEC 210.8(B)(2). LOCATE SUCH OUTLETS SO THAT THEY ARE ACCESSIBLE AFTER APPLIANCES THAT ARE PLUGGED INTO THE OUTLETS ARE IN PLACE.

6. ALL RECEPTACLES INSTALLED OUTDOORS SHALL BE WEATHERPROOF AND HAVE GROUND FAULT CIRCUIT INTERRUPTER PROTECTION.

262726.01 CONTROLLED 120V RECEPTACLES:

1. CALIFORNIA ENERGY CODE, SECTION 130.5(d) NOW REQUIRES THAT BOTH CONTROLLED AND UNCONTROLLED 120V OUTLETS FOR PLUG LOADS BE PROVIDED IN THE FOLLOWING LOCATIONS:

A. EACH PRIVATE OFFICE.
B. EACH OPEN OFFICE AREA.
C. RECEPTION LOBBY.
D. CONFERENCE ROOM.
E. KITCHENETTE AND BREAK ROOM IN OFFICE SPACES.
F. COPY ROOM.

2. CIRCUITS SERVING CONTROLLED RECEPTACLES SHALL BE AUTOMATICALLY BE SHUT-OFF IN ACCORDANCE WITH SECTION 130.1(e)1.

262726.02 DEVICE PLATES:

1. ALL DEVICE PLATES FOR INDOOR USE SHALL BE NYLON.

2. ALL DEVICE BOXES WHICH ARE INSTALLED IN FIRE RATED WALL ASSEMBLY AND IS PROVIDED WITH A FIRE-STOPPING PUTTY PAD SHALL HAVE A BRUSHED STAINLESS STEEL COVERPLATE IN ACCORDANCE WITH THE REQUIREMENTS OF THE PUTTY PAD.

3. DEVICE COVERS FOR SURFACE MOUNTED BOXES SHALL BE 1/2" RAISED STEEL PLATES.

4. DEVICE COVERS FOR DEVICES LOCATED IN DAMP LOCATIONS SHALL COMPLY WITH CEC 406.9(A).

5. DEVICE COVERS FOR DEVICES LOCATED IN WET LOCATIONS SHALL COMPLY WITH CEC 406.9(B).

262729 DISCONNECT SWITCHES:

1. UNITS SHALL BE HEAVY DUTY FUSED DISCONNECT SWITCHES, TWO OR THREE POLE TYPE, WHERE INDICATED ON THE DRAWINGS, OR AS REQUIRED BY CODE. SWITCHES AND FUSES SHALL BE AS REQUIRED BY THE LOADS SERVING.

2. DISCONNECTS FOR FRACTIONAL HORSE POWER MOTORS SHALL BE MOTOR-RATED TOGGLE TYPE DISCONNECTS.

3. DISCONNECTS FOR SINGLE PHASE MOTORS SHALL BE SINGLE PHASE AND NOT THREE PHASE.

4. LOCATE DISCONNECTS IN ACCORDANCE WITH CEC 430.102. ENSURE ALL CODE-REQUIRED CLEARANCES.

265100 LIGHTING:

1. ALL LUMINARIES SHALL BE CERTIFIED BY THE MANUFACTURER TO THE CALIFORNIA ENERGY COMMISSION:

A. ALL LUMINARIES SPECIFIED ON THIS PROJECT SHALL BE AS NOTED IN THE "LIGHT FIXTURE SCHEDULE" ON THESE PLANS. NO SUBSTITUTES ARE PERMITTED WITHOUT WRITTEN APPROVAL OF THE ENGINEER.

265300 EXIT AND MEANS OF EGRESS EMERGENCY LIGHTING:

1. PROVIDE EXIT SIGNS IN ACCORDANCE WITH CBC SECTION 1011.1. PROVIDE MEANS OF EGRESS ILLUMINATION IN ACCORDANCE WITH CBC SECTION 1006. PROVIDE FLOOR-LEVEL EXIT SIGNS PER CBC 1011.7 IF REQUIRED

2. ELECTRICAL CONTRACTOR SHALL RE-VERIFY PLACEMENT OF ALL EXIT SIGNS AS TO ENSURE THAT THEY ARE CLEARLY VISIBLE FROM ANY DIRECTION OF APPROACH WITHIN THE PATH OF EXIT TRAVEL TO AND WITHIN EXITS INSIDE THE BUILDING. THIS VERIFICATION SHALL BE CARRIED OUT AT ROUGHIN STAGE. THEY SHALL BE LOCATED AS NECESSARY TO CLEARLY INDICATE THE DIRECTION OF EGRESS TRAVEL. NO POINT IN THE EXIT PATH SHALL BE MORE THAN 100 FT. FROM THE NEAREST VISIBLE SIGN. ALL IN ACCORDANCE WITH CBC SECTION 1011.1. RELOCATE AND/OR ADD EXIT SIGNS AS NECESSARY TO ACHIEVE THIS. PROVIDE PENDANTS TO MOUNT SIGNS AS NECESSARY TO ACHIEVE THIS.

3. THE FINAL NUMBER AND LOCATION OF EXIT SIGNS SHALL BE DETERMINED IN THE FIELD BY THE FIRE MARSHALL AND BUILDING INSPECTOR.

4. INDIVIDUAL UNIT EQUIPMENT FOR EMERGENCY ILLUMINATION SHALL COMPLY WITH CEC SECTION 700.12(F). THE BRANCH CIRCUIT FEEDING THE UNIT EQUIPMENT SHALL BE THE SAME BRANCH CIRCUIT AS THAT SERVING THE NORMAL LIGHTING IN THE AREA AND CONNECTED AHEAD OF ANY LOCAL SWITCHES.

5. ALL EMERGENCY LIGHTS AND EXIT SIGNS SHALL BE PROVIDED WITH AN UNSWITCHED HOT WIRE.

6. ALL EMERGENCY LIGHT FIXTURES WITH INTEGRAL BATTERY BALLASTS SHALL BE SWITCHED AS SHOWN AND SHALL COME ON IN EMERGENCY POWER-OFF MODE UPON POWER FAILURE. TO THIS EFFECT PROVIDE AN UNSWITCHED POWER WIRE TO EACH SUCH FIXTURE FROM THE SAME CIRCUIT AS THAT FEEDING THE LIGHT FIXTURE.

MEP COMPONENT ANCHORAGE

APPLICABLE CODE: 2022 CBC

MEP COMPONENT ANCHORAGE NOTE

ALL MECHANICAL, PLUMBING, AND ELECTRICAL COMPONENTS SHALL BE ANCHORED AND INSTALLED PER THE DETAILS ON THE DSA-APPROVED CONSTRUCTION DOCUMENTS. THE FOLLOWING COMPONENTS SHALL BE ANCHORED OR BRACED TO MEET THE FORCE AND DISPLACEMENT REQUIREMENTS PRESCRIBED IN THE 2022 CBC SECTIONS 1617A.1.18 THROUGH 1617A.1.26 AND ASCE 7-16 CHAPTERS 13, 26, AND 30:

1. ALL PERMANENT EQUIPMENT AND COMPONENTS.

2. TEMPORARY, MOVABLE OR MOBILE EQUIPMENT THAT IS PERMANENTLY ATTACHED (E.G., HARD WIRED) TO THE BUILDING UTILITY SERVICES SUCH AS ELECTRICITY, GAS OR WATER. "PERMANENTLY ATTACHED" SHALL INCLUDE ALL ELECTRICAL CONNECTIONS EXCEPT PLUGS FOR 110/220 VOLT RECEPTACLES HAVING A FLEXIBLE CABLE.

3. TEMPORARY, MOVABLE OR MOBILE EQUIPMENT WHICH IS HEAVIER THAN 400 POUNDS OR HAS A CENTER OF MASS LOCATED 4 FEET OR MORE ABOVE THE ADJACENT FLOOR OR ROOF LEVEL THAT DIRECTLY SUPPORT THE COMPONENT IS REQUIRED TO BE RESTRAINED IN A MANNER APPROVED BY DSA.

THE FOLLOWING MECHANICAL AND ELECTRICAL COMPONENTS SHALL BE POSITIVELY ATTACHED TO THE STRUCTURE BUT NEED NOT DEMONSTRATE DESIGN COMPLIANCE WITH THE REFERENCES NOTED ABOVE. THESE COMPONENTS SHALL HAVE FLEXIBLE CONNECTIONS PROVIDED BETWEEN THE COMPONENT AND ASSOCIATED DUCTWORK, PIPING, AND CONDUIT. FLEXIBLE CONNECTIONS MUST ALLOW MOVEMENT IN BOTH TRANSVERSE AND LONGITUDINAL DIRECTIONS:

A. COMPONENTS WEIGHING LESS THAN 400 POUNDS AND HAVING A CENTER OF MASS LOCATED 4 FEET OR LESS ABOVE THE ADJACENT FLOOR OR ROOF LEVEL THAT DIRECTLY SUPPORT THE COMPONENT.

B. COMPONENTS WEIGHING LESS THAN 20 POUNDS, OR IN THE CASE OF DISTRIBUTED SYSTEMS, LESS THAN 5 POUNDS PER FOOT, WHICH ARE SUSPENDED FROM A ROOF OR FLOOR OR HUNG FROM A WALL.

THE ANCHORAGE OF ALL MECHANICAL, ELECTRICAL AND PLUMBING COMPONENTS SHALL BE SUBJECT TO THE APPROVAL OF THE DESIGN PROFESSIONAL IN GENERAL RESPONSIBLE CHARGE OR STRUCTURAL ENGINEER DELEGATED RESPONSIBILITY AND ACCEPTANCE BY DSA. THE PROJECT INSPECTOR WILL VERIFY THAT ALL COMPONENTS AND EQUIPMENT HAVE BEEN ANCHORED IN ACCORDANCE WITH THE ABOVE REQUIREMENTS.

PIPING, DUCTWORK, AND ELECTRICAL DISTRIBUTION SYSTEM BRACING NOTE

PIPING, DUCTWORK, AND ELECTRICAL DISTRIBUTION SYSTEMS SHALL BE BRACED TO COMPLY WITH THE FORCES AND DISPLACEMENTS PRESCRIBED IN ASCE 7 SECTION 13.3 AS DEFINED IN ASCE 7 SECTIONS 13.6.5, 13.6.6, 13.6.7, 13.6.8; AND 2022 CBC, SECTIONS 1617A.1.24, 1617A.1.25 AND 1617A.1.26.

THE METHOD OF SHOWING BRACING AND ATTACHMENTS TO THE STRUCTURE FOR THE IDENTIFIED DISTRIBUTION SYSTEM ARE AS NOTED BELOW. THE MEP DESIGN PROFESSIONAL ENGINEER RESPOSIBLE FOR CONTENT ON THESE SHEETS HAS VERIFIED THAT THE DESIGN METHOD IDENTIFIED BELOW ARE IN ACCORDANCE WITH DSA IR 16-13.

MECHANICAL PIPING (MP), MECHANICAL DUCTS (MD), PLUMBING PIPING (PP), ELECTRICAL DISTRIBUTION SYSTEMS (E):

MP ☐ MD ☐ PP ☐ E ☒ - OPTION 1: PROJECT SPECIFIC DESIGN

MP ☐ MD ☐ PP ☐ E ☐ OPTION 2: DESIGN BASED ON OSHPD OPM WITHIN PROJECT SUBMITTAL

MP ☐ MD ☐ PP ☐ E ☐ OPTION 3: DESIGN BASED UPON OSHPD OPM, DEFERRED SUBMITTAL

N

IDENTIFICAT

ELECTRICAL LEGEND

LIGHTING FIXTURES

LINEAR FIXTURE
- SQUARE = RECESSED
- CIRCLE =SURFACE

FIXTURE NOTATIONS:
A,(b),C-12 FIXTURE TYPE "A", SWITCH "b", CIRCUIT C-12
A/LED ALTERNATE DESIGNATION FOR SITE LIGHTING FIXTURES

TASK LIGHT OR STRIP LIGHT

DOWNLIGHT, SQUARE = RECESSED

WALL MOUNT

CEILING EXHAUST FAN

POLE MOUNT AREA LIGHT

EMERGENCY LIGHTING

EXIT SIGN WITH 90 MIN BATTERY BACKUP

WALL MOUNT EMERGENCY LIGHT WITH 90 MIN BATTERY BACK

EXTERIOR LANDING EMERGENCY LIGHT. CONNECT TO INTERIOR EXIT SIGN FOR POWER.

ELECTRICAL POWER

ALL LINE VOLTAGE WIRING IN CONDUIT, SEE GENERAL NOTES
TICKS = # OF #12 WIRE, SHORT = HOT, LONG = NEUTRAL, DOT = GROUND, UNLESS NOTED OTHERWISE

120V OUTLET, +18" TO BOTTOM OF BOX
- S = SIGN
- F = FLOOR
- GFI = GROUND FAULT INTERUPTER

JUCTION BOX

MOTOR / DISCONNECT

PANELBOARD

TRANSFORMER / SWITCHBOARD AS NOTED

COMMUNICATIONS

TELEPHONE BACKBOARD, PROVIDE #8 GND TO SERVICE GROUND

COMMUNICATIONS OUTLET, PHONE & DATA

PHONE ONLY OUTLET, PREWIRED WITH CAT 6 CABLE

DATA ONLY OUTLET JACK, PREWIRED WITH CAT 6 CABLE

IP SPEAKER

CLOCK SPEAKER (IP BASED)

WAP — WIRELESS ACCESS POINT

TS — TEACHER STATION

HDMI — HMDI CONNECTOR IN FLUSH WALL PLATE

TV — TV EXIST WITH COAX OUTLET, NEW WITH 2 DATA AND HDMI

DRAFTING NOTATIONS

N## — KEY NOTE, SEE SCHEDULE

N## — EQUIPMENT TAG, SEE SCHEDULE

A/E-2 — REFERENCE TO A DETAIL VIEW "A" ON SHEET E-2

NEW ELECTRICAL CONDUIT AND WIRE

(e) (E) — EXISTING DEVICE, TO REMAIN IN OPERATION

(r) (R) — REMOVE DEVICE, KEEP REMAINDER OF CIRCUIT IN OPERATION

(RR) — REMOVE, RELOCATE AND RECONNECT DEVICE ON EXISTING CIRCUIT, EXTEND CIRCUIT

ELECTRICAL ABBREVIATIONS:

AL = ALUMINUM
A = AMPERAGE
AIC = AMPS INTERRUPTING CAPACITY
AFF = ABOVE FINISHED FLOOR
AFG = ABOVE FINISHED GRADE
CKT = CIRCUIT
CO = CONDUIT ONLY
CU = COPPER
EC = ELECTRICAL CONTRACTOR
GC = GENERAL CONTRACTOR
GFI = GROUND FAULT INTERRUPTER
GND = GROUND
KW = KILOWATT
KVA = KILO-VOLT-AMPERE
LC = LIGHTING CONTACTOR
NO = NUMBER
NL = NIGHT LIGHT
PB = PULLBOX
SP = SPACE
UG = UNDERGROUND
UON = UNLESS OTHERWISE NOTED
V = VOLT
WP = WEATHERPROOF

FIRE ALARM

1A, 1X, 1Y, 1Z
TSP#16 ADDRESSIBLE INPUT CIRCUIT
2#14 HARD WIRED NON-ADDRESSIBLE CIRCUITS
2#12 VISUAL CIRCUIT
2#14/SHIELDED AUDIBLE CIRCUIT

NOTE: ALL FIRE ALARM CABLES/ CONDUCTORS SHALL BE CSFM APPROVED.

FIRE ALARM CONTROL PANEL (FACP)

SMOKE DETECTOR

COMBINATION SMOKE /CO DETECTOR

DUCT SMOKE DETECTOR

HEAT DETECTOR

HEAT DETECTOR IN ATTIC (194 DEGREE)

CO — CARBON MONOXIDE DETECTOR

STROBE

COMBINATION SPEAKER/STROBE

EXTERIOR HORN

PULL STATION

MM — INPUT MODULE

TCDR — TONE GENERATOR

RM — RISER MONITOR MODULE

FIRE ALARM ABBREVIATIONS:

CD = CANDELLA
DSD = DUCT SMOKE DETECTOR
EOL = END OF LINE RESISTOR
NAC = NOTIFICATION POWER SUPPLY
PIV = POST INDICATOR VALVE
TS = TAMPER SWITCH
WF = WATER FLOW SWITCH
WP = WEATHERPROOF

MARKINGS:
a### = CIRCUIT "a" DEVICE ###
15CD = 15 CANDELLA VISUAL DEVICE
1/2W = 1/2 WATT AUDIBLE DEVICE

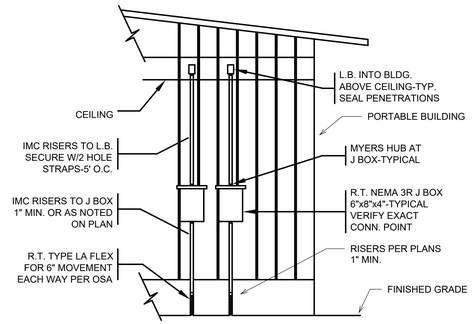

1 PORTABLE CONNECTIONS
SCALE: NTS

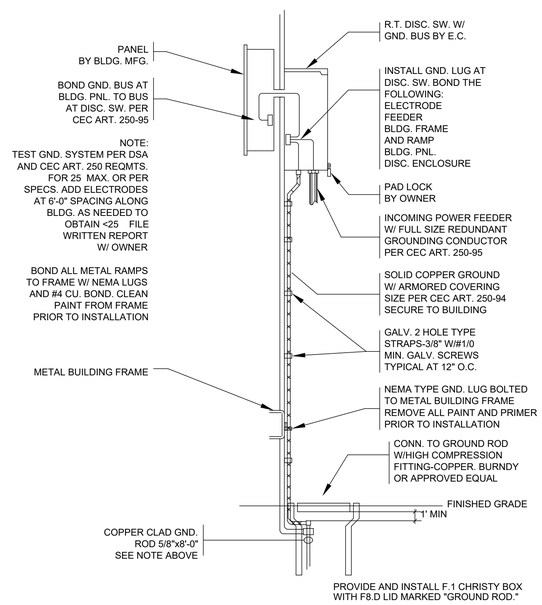

GROUND RESISTANCE COMPLIANCE SHALL BE TESTED BY A INDEPENDENT TESTING AGENCY HIRED BY THE OWNER.

2 PORTABLE GROUNDING DETAIL
SCALE: NTS

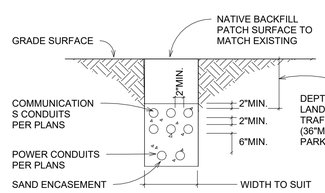

NOTE: PROVIDE MIN 12" CLEARANCE BETWEEN ELECTRICAL AND OTHER UTILITIES (GAS, WATER, ETC.).

SEE DETAIL 9/S0.2 FOR TRENCHES WITHIN 20' OF BUILDINGS.

3 TRENCH DETAIL
SCALE: NTS

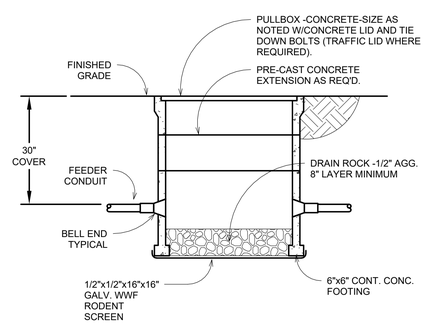

PRE-CAST CONC. BOX SIZE AS REQUIRED

5 CONCRETE PULLBOX
SCALE: NTS

MAIN SERVICE SWITCHBOARD "MS2": NEMA 3R

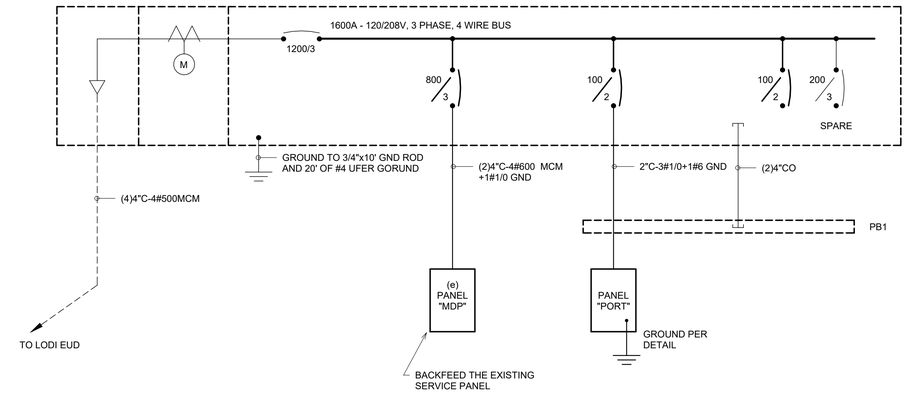

ARC FLASH LABELLING REQUIREMENT:
PROVIDE THE FOLLOWING LABEL AS A MINIMUM FOR COMPLIANCE WITH NFPA AND NEC ON THIS PROJECT:

⚠ DANGER
ARC FLASH AND SHOCK HAZARD
FOLLOW ALL REQUIREMENTS IN NFPA 70E FOR SAFE WORK PRACTICES AND FOR PERSONAL PROTECTIVE EQUIPMENT

4 ONE LINE DIAGRAM
SCALE: NTS

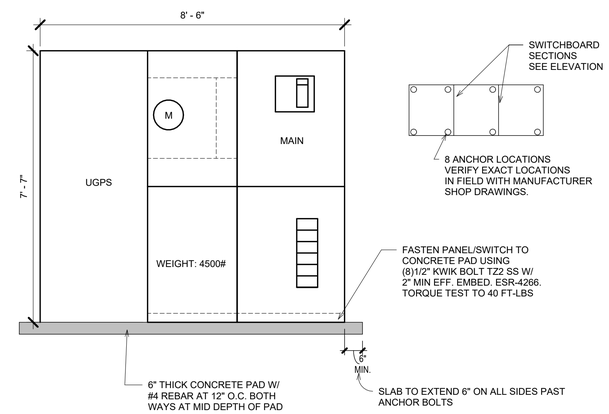

NOTES: MAIN SERVICE SWITCHBOARD

1. ALL DIMENSIONS ARE NOMINAL.
2. THE COMPLETE SWITCHBOARD SHALL HAVE A SYMMETRICAL SHORT CIRCUIT RATING EQUAL TO OR GREATER THAN THAT AVAILABLE FROM THE UTILITY COMPANY.
3. MINIMUM INTEGRAL A.I.C. RATING OF SWITCHBOARD AND FEEDER CIRCUIT BREAKERS TO BE 42,000 AMPS.
4. BOLT SECTIONS OF THE SWITCHBOARD TOGETHER WITH 1/2" BOLT AND NUTS AT 4 PLACES PER SECTION.

6 SERVICE MS2 MOUNTING
SCALE: 1/2" = 1'-0"

IDENTIFICATION STAMP
DIV. OF THE STATE ARCHITECT
APP: 02-123433 INC:
REVIEWED FOR
SS ☑ FLS ☑ ACS ☑
DATE: 01/20/2026

ARCHITECHNICA
555 West Benjamin Holt Drive, Suite 423
Stockton, California 95207
P: (209) 952-5850
F: (209) 952-2442
E: info@architechnica.net
www.architechnica.net

LICENSED ARCHITECT — TIMOTHY L. DEARBORN — C-29928 — RENEWAL 12 / 2027 — STATE OF CALIFORNIA

© 2026 ARCHITECHNICA

HCS Engineering inc.
4512 Feather River Dr #F, Stockton, CA 95219
209-478-8270 | www.hcs-eng.com
REGISTERED PROFESSIONAL ENGINEER — RICHARD C. SMITH — No. E14303 Exp. 6-30-27 — ELECTRICAL — STATE OF CALIFORNIA
CONSULTANT

ROADRUNNERS — ERMA B. REESE ELEMENTARY

ERMA B REESE ELEMENTARY

1800 W ELM ST
LODI, CA 95242

LODI UNIFIED SCHOOL DISTRICT

REVISIONS		

PROJECT NO: 2017.xxx
ISSUE SET: Project Status
ISSUE DATE: 1.15.26
DRAWN BY: Author

ELECTRICAL CONSTRUCTION DETAILS

ES0.2

1/13/2026 3:04:31 PM

path://john/17/4

FIRE ALARM SYSTEM NOTES:

1. GENERAL REQUIREMENTS: THE CONTRACTOR SHALL FURNISH AND INSTALL A COMPLETE AND FULLY OPERATIONAL FUNCTIONAL AUTOMATIC FIRE ALARM SYSTEM FOR THE BUILDINGS ADDED NETWORK TO EXIST SYSTEM.

A. THE FIRE ALARM SYSTEM SHALL BE AN ELECTRICALLY SUPERVISED, BATTERY STANDBY, FULLY ADDRESSABLE SYSTEM, SUPERVISED AGAINST OPENS, SHORTS AND GROUND FAULTS IN ALL EXTERNAL CIRCUITS AND CONTAIN ALL NECESSARY POWER SUPPLIES, BATTERIES, CHARGER, SIGNAL AND INITIATING CIRCUITS AND SILENCING SWITCH FOR A COMPLETE AND OPERATIONAL SYSTEM.

B. THE FIRE ALARM SYSTEM SHALL CONFORM TO ALL LOCAL AND STATE FIRE CODES. THE SYSTEM SHALL COMPLY WITH SENATE BILL SB 575. ALL EQUIPMENT SHALL HAVE BEEN APPROVED AND LISTED BY THE STATE FIRE MARSHAL.

C. THE FIRE ALARM SYSTEM EQUIPMENT SHALL BE U.L. LISTED AND LISTED BY THE CALIFORNIA STATE FIRE MARSHAL'S OFFICE.

D. ALL WIRING SHALL BE IN CONDUIT. MINIMUM SIZE OF CONDUIT SHALL BE 1/2" INDOORS AND 3/4" UNDERGROUND. ALL CONDUITS INSTALLED UNDERGROUND AND ON EXTERIOR OF BUILDING EXTERIOR WALLS SHALL HAVE WATER TIGHT FITTINGS.

E. SEE ELECTRICAL SPECIFICATIONS FOR ADDITIONAL REQUIREMENTS.

EQUIPMENT: SCOPE OF WORK/INSTALLATION

A. FIRE ALARM CONTROL PANEL WITH ALL NECESSARY MODULES, POWER SUPPLY, BATTERY, ETC., DACT PANEL.

B. WP SPEAKERS, SPEAKER/STROBES AND STROBES.

C. SMOKE DETECTORS AND HEAT DETECTORS.

D. ALL ASSOCIATED WIRING, MODULES, ACCESSORIES, ETC., AS REQUIRED TO MAKE THIS A COMPLETE AND FULLY OPERATIONAL FIRE ALARM SYSTEM.

OPERATION:

1. SEE OPERATION MATRIX.

2. THE AUDIBLE DEVICES SHALL PRODUCE THE SAME BASIC SOUND AND PATTERN. AUDIBLE DEVICES SHALL BE AT LEAST 15dBA ABOVE AVERAGE AMBIENT SOUND LEVEL BUT NOT LESS THAN 75dBA AT 10 FT. OR MORE THAN 110dBA IN TOTAL THROUGHOUT.

3. VISUAL DEVICES SHALL NOT EXCEED 2 FLASHES PER SECOND AND SHALL NOT BE SLOWER THAN 1 FLASH EVERY SECOND.

SUBMITTALS:

1. SUBMITTALS ARE NOT REQUIRED. THE SYSTEM AS LAID OUT ON THE PLANS AND SPECIFIED IN THE SPECIFICATIONS HAS ALREADY BEEN APPROVED BY DSA. THE CONTRACTOR SHALL INSTALL SPECIFIED SYSTEM. SEE ELECTRICAL SPECIFICATIONS FOR SUBSTITUTION INSTRUCTIONS AND REQUIREMENTS WHERE SUBSTITUTIONS ARE PERMITTED.

WIRING:

1. ALL WIRING SHALL BE IN CONDUIT.

2. SEE WIRING SCHEDULE ON THIS SHEET.

COMBINATION SMOKE/FIRE DAMPERS:

1. COMBINATION SMOKE/FIRE DAMPERS ARE TO BE SUPPLIED AND INSTALLED BY THE HVAC CONTRACTOR.

2. ELECTRICAL CONTRACTOR SHALL VERIFY TYPE WITH HVAC CONTRACTOR AND OBTAIN HOOKUP INSTRUCTIONS AND WIRING DIAGRAMS. HE SHALL FURTHER PROVIDE 120 VOLT POWER TO EACH DAMPER AND INTERLOCK DAMPERS TO THE FIRE ALARM SYSTEM AS REQUIRED THROUGH THE CEILING MOUNT SMOKE DETECTORS.

3. ELECTRICAL CONTRACTOR SHALL PROVIDE SYSTEM CEILING MOUNT SMOKE DETECTORS TO PRODUCE A TOTAL-COVERAGE SMOKE DETECTION SYSTEM. INTERTIE THESE DEVICES TO THE FIRE ALARM/CONTROL PANEL AND THE COMBINATION SMOKE/FIRE DAMPERS SUCH THAT THE DAMPERS CLOSE AND THE FIRE ALARM SYSTEM GOES INTO GENERAL ALARM WHEN ANY OF THESE DETECTORS GO INTO ALARM. ALL IN COMPLIANCE WITH C.B.C. SECTION 713.10.

PENETRATIONS:

1. PENETRATIONS OF FIRE-RATED WALLS SHALL BE PROTECTED IN ACCORDANCE WITH CALIFORNIA BUILDING CODE, PART 2, CHAPTER 7, TITLE 24.

TESTING:

1. UPON COMPLETION OF THE INSTALLATION OF THE FIRE ALARM SYSTEM, A SATISFACTORY TEST OF THE ENTIRE SYSTEM SHALL BE MADE IN THE PRESENCE OF, AND BE WITNESSED BY THE LOCAL FIRE AUTHORITY WITH THE DSA INSPECTOR OF RECORD.

2. PROVIDE A CERTIFICATE OF COMPLETION PER NFPA 72.

COMPLETE FIRE ALARM SYSTEM SUBMITTALS ATTACHED

NOTE:
AUTOMATIC FIRE ALARM SYSTEMS SHALL BE MONITORED AND SHALL TRANSMIT THE ALARM, SUPERVISORY, AND TROUBLE SIGNALS TO AN APPROVED SUPERVISING STATION IN ACCORDANCE WITH NFPA 72, AS AMENDED BY CFC CHAPTER 80. THE SUPERVISING STATION SHALL BE LISTED AS EITHER UUFX (CENTRAL STATION) OR UUJS (REMOTE & PROPRIETARY) BY UNDERWRITERS LABORATORY INC. (UL) OR OTHER APPROVED LISTING AND TESTING LABORATORY OR SHALL COMPLY WITH THE REQUIREMENTS OF STANDARD, FACTORY MUTUAL (FM) 3011. TERMINATION OF MONITORING SERVICES SHALL BE IN ACCORDANCE WITH CBC/CFC SECTION 907.6.6.2.

TAG	CABLE	COLOR CODE	FOR
A	TSP#16	RED/BLACK	ADDRESSIBLE INPUT
X	2#12 THWN	RED/BLACK	SMOKE & HEAT DETECTORS
Y	2#12 THWN	BLUE/BROWN	VISUALS
Z	2#12 SPEAKER CABLE	RED/BLACK	AUDIBLE

COMPLETE FIRE ALARM SYSTEM SUBMITTALS ATTACHED. NO SUBSTITUTES.

3 FIRE ALARM WIRING SCHEDULE
SCALE: NTS

DEVICE / RESULTS	MANUAL PULL STATION	SMOKE & HEAT DETECTORS	POWER LOSS	GROUND FAULT, OPENS, SHORTS			
ACTIVATE AUDIBLES	YES	YES	NO	NO			
ACTIVATE VISUALS	YES	YES	N/A	N/A			
ANNUNCIATE AT FACP	YES	YES	YES	YES			
ANNUNCIATE AT REMOTE ANNUCIATOR	YES	YES	YES	YES			
LIGHT UP "ALARM" LIGHT	YES	YES	NO	NO			
LIGHT UP "TROUBLE" LIGHT	NO	NO	YES	YES			
REPORT TO CONTROL STATION	YES	YES	YES	YES			

N/A = NOT APPLICABLE

1 FIRE ALARM MATRIX
SCALE: NTS

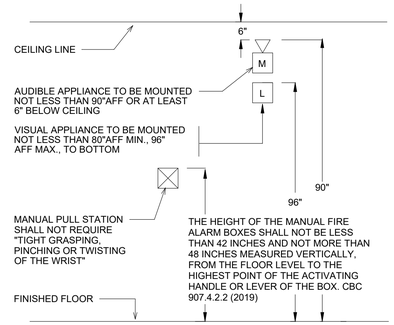

2 FIRE ALARM ELEVATION
SCALE: NTS

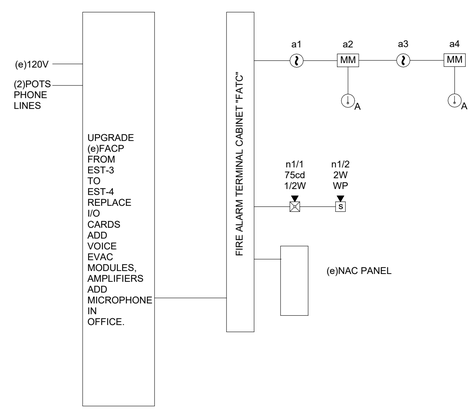

4 RISER
SCALE: NTS

FIRE ALARM SYSTEM COMPONENTS

DEVICE	DESCRIPTION	MANUFACTURER	MODEL #	CSFM #
a	FIRE ALARM CONTROL PANEL	EDWARDS	EST4	7170-1657:508
	4-CPU CPU			
	4-NET-AD NETWORK ADDED MODULE			
	4-NET-TP SFP NETWORK CONTROLLER			
	4-NET-MM SFP NETWORK CONTROLLER FIBER			
	4-LCFLE TOUCHSCREEN DISPLAY			
	4-3LCD TOUCH SCREEN MODULE			
	4-24L24S CONTROL DISPLAY MODULE			
	4-PPS/M POWER SUPPLY			
	3-SSDC2 SIGNATURE LOOP MODULE			
	3-SDDC2 DUAL SIGNATURE LOOP MODULE			
	4-MIC MICROPHONE			
	F-AUDTEL AUDIO/PHONE RISER MODULE			
	3-ZA20A 20W AMPLIFIER			
	3-AZ40A 40W AMPLIFIER			
	3-CAB CABINET			
	BC-1R EXTERNAL BATTERY CABINET			
b	REMOTE ANNUNCAITOR	EDWARDS	3-4ANN	7120-1657:509
	4-6ANN REMOTE LCD ANNUNICATOR			
	4-LCDANN REMOTE LCD DISPLAY			
	4-MIC MICROPHONE			
exist	NAC PANEL	EDWARDS	APS10A	7300-1657:229
c	ATTIC HEAT DETECTOR			
	INPUT MODULE	EDWARDS	SIGA-CT1HT	7300-1657:121
	194 DEGREE HEAT DETECTOR	SYSTEM SENSOR	5604	7270-1653:167
d	SMOKE DETECTOR	EDWARDS	SIGA-OSD	7272-1657:511
	BASE		SIGA-SB	7300-1657:120
f	SIGNALLING DEVICES			
	SPEAKER STROBE	EDWARDS	G4SVRN	7320-1657:516
	WP SPEAKER	EDWARDS	WG4RN-S	7320-1657:289

FACP-A BATTERY CALCULATIONS

Description	Qty.	Standby Current (mA)	Total Standby (mA)	Alarm Current (mA)	Total Alarm (mA)
Power Supply	1	N/A	N/A	N/A	N/A
BOOSTER POWER SUPPLY	1	45	45	45	45
CPU	1	230	230	230	230
NETWORK MODULES (SET)	0	305	0	305	0
LCD DISPLAY	1	40	40	93	93
SIGA CONTROLLER	1	144	144	204	204
DUAL SIGA CONTROLLER	4	264	1056	336	1344
AUDIO/PHONE MODULE	1	85	85	101	101
RELAY MODULE	0	0	0	8	0
DACT	1	60	60	95	95
20W AMPLIFIER	1	62	62	1120	1120
40W AMPLIFIER	1	62	62	2480	2480
DISPLAY CONTROL MODULE	1	4	4	10	10
REMOTE ANNUNCAITOR	0	125	0	125	0
MICROPHONE	1	8	8	38	38
TOTALS	--	--	1796	--	5760

* NOTE: The SIGA Device Controller is calculated with the maximum Signature addressable device load

Battery Requirement Calculation for 24 Hours Standby and 15 Minutes Alarm:
Ampere Hours = [(Standby Current x Time)+(Alarm Current x Time)] x Derating Factor
Ampere Hours = [(1.796A x 24 hrs)+(5.76A x 0.25 hrs)] x 1.25
Ampere Hours = 55.7

BATTERIES SUPPLIED: (4) 12 Volts, 24 Ampere Hours (24 Volts, 68 Ampere Hours)

NACA BATTERY CALCULATIONS

Description	Qty.	Standby Current (mA)	Total Standby (mA)	Alarm Current (mA)	Total Alarm (mA)
Control Board	1	105	105	270	270
Auxiliary	0	0	0	0	0
NAC N1	1	--	--	28	28
SPARE	1	--	--	0	0
SPARE	1	--	--	0	0
SPARE	1	--	--	0	0
	1	--	--	0	0
TOTALS	--	--	105	--	298

Battery Requirement Calculation for 24 Hours Standby and 15 Minutes Alarm:
Ampere Hours = [(Standby Current x Time)+(Alarm Current x Time)] x Derating Factor
Ampere Hours = [(0.105A x 24 hrs)+(0.298A x 0.25 hrs)] x 1.25
Ampere Hours = 3.2

BATTERIES SUPPLIED: (2) 12 Volts, 7 Ampere Hours (24 Volts, 7 Ampere Hours)

NAC VOLTAGE DROP CALCULATIONS

CALCULATION: dV = V - (2L x K x dI)
Where: dV = device Voltage
V = previous device voltage (Source Voltage = 20.4 VDC)
K = wire AWG constant (Ω/k') at 167°F: #8 = 0.81, #10 = 1.29, #12 = 2.05, #14 = 3.26
L = wire length
dI = current

DEVICE LEGEND: S(x) = Strobe (where 'x' is candela)
HS(x) = Horn/Strobe (where 'x' is candela)
H = Horn
WPH = Weatherproof Horn
CEIL = Ceiling Mounted

CIRCUIT: N1/

DEVICE ID NO.	DEVICE TYPE	DEVICE CURRENT (mA)	SECTION CURRENT (mA)	WIRE AWG	LENGTH (ft)	DEVICE VDC	PERCENT DROP
N1/01	ss75	28	28	12	200	20.38	0.11
N1/02	wph	0	0	12	40	20.38	0.11

SPEAKER NAC VOLTAGE DROP CALCULATIONS (FACPA)

CALCULATION (LUMP SUM METHOD): VD = (2L x K x I)
Where: VD = voltage drop
L = wire length
K = wire AWG constant (Ω/k') at 167°F: #16 = 4.73, #18 = 7.51, #20 = 11.90, #22 = 19.00 (worst case)
I = total current (Note: Total current is derived by Ohm's Law, dividing the total power by the source voltage: I = P/E)

AUDIO LOSS: dB = 20 x log (Vc/Vs)
Where: dB = audio loss
Vc = calculated voltage (source voltage minus voltage drop)
Vs = source voltage

CIRCUIT NUMBER	TOTAL PWR (W)	SOURCE VOLTAGE	CURRENT (A)	WIRE AWG	LENGTH (ft)	VOLTAGE DROP	PERCENT DROP	AUDIO LOSS (dB)
N1	2.5	70	0.04	16	300	0.05	0.07	-0.01

IDENTIFICATION STAMP
DIV. OF THE STATE ARCHITECT
APP: 02-123433 INC:
REVIEWED FOR
SS ☑ FLS ☑ ACS ☑
DATE: 01/20/2026

ARCHITECHNICA
555 West Benjamin Holt Drive, Suite 423
Stockton, California 95207
P: (209) 952-5850
F: (209) 952-2442
E: info@architechnica.net
www.architechnica.net

LICENSED ARCHITECT TIMOTHY L. DEARBORN C-29928 RENEWAL 12 / 2027 STATE OF CALIFORNIA

© 2026 ARCHITECHNICA

HCS Engineering inc.
4512 Feather River Dr #F, Stockton, CA 95219
209-478-8270 | www.hcs-eng.com

REGISTERED PROFESSIONAL ENGINEER RICHARD C. SMITH No. E14303 Exp. 6-30-27 ELECTRICAL STATE OF CALIFORNIA

CONSULTANT

ROADRUNNERS ERMA B. REESE ELEMENTARY

ERMA B REESE ELEMENTARY

1800 W ELM ST
LODI, CA 95242

LODI UNIFIED SCHOOL DISTRICT

REVISIONS

PROJECT NO: 2017.xxx
ISSUE SET: Project Status
ISSUE DATE: 1.15.26
DRAWN BY: Author

FIRE ALARM DETAILS

ES0.3

1/13/2026 3:04:31 PM

path://john/17/4

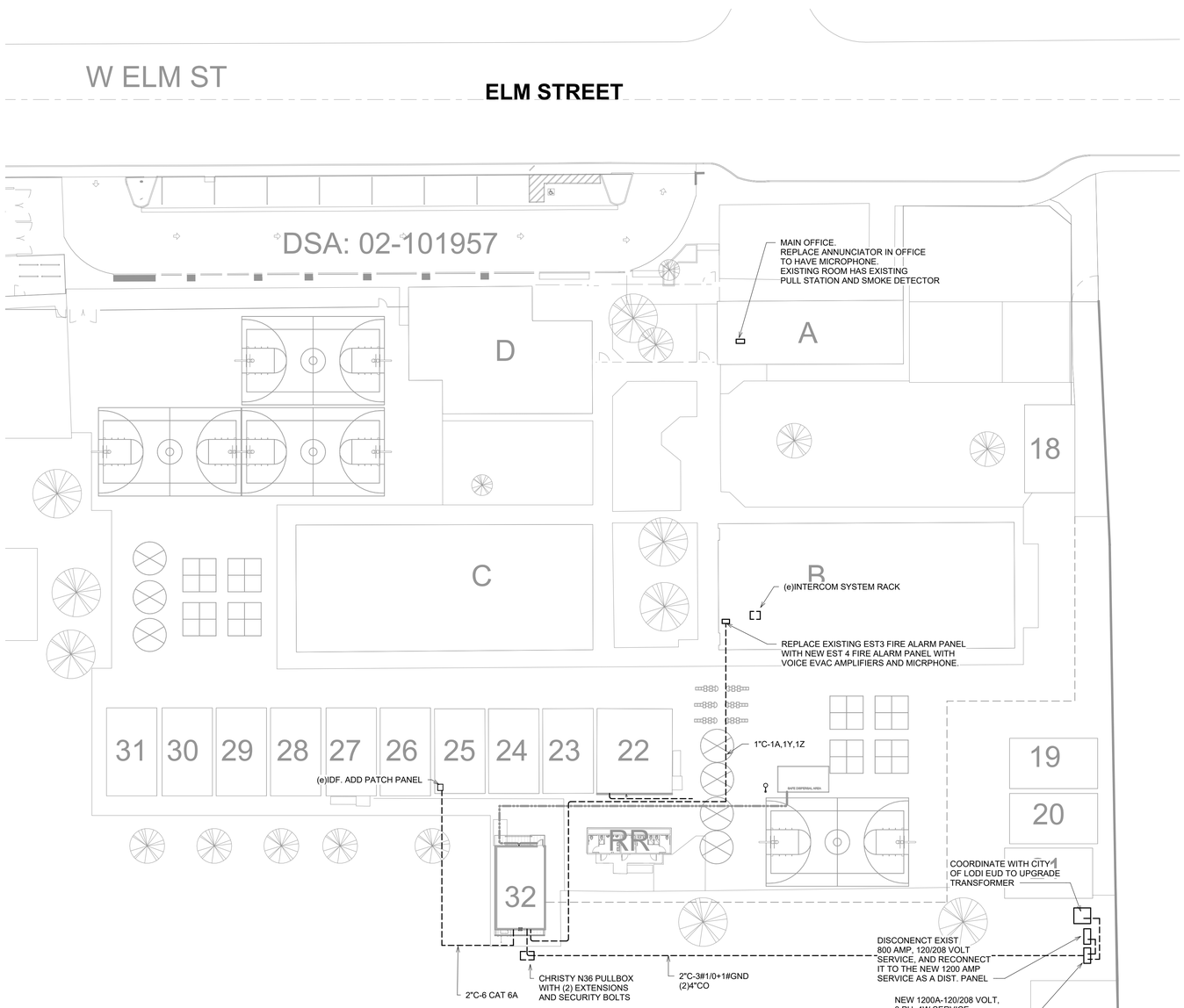

1 ELECTRICAL SITE PLAN

SCALE: 1" = 30'-0"

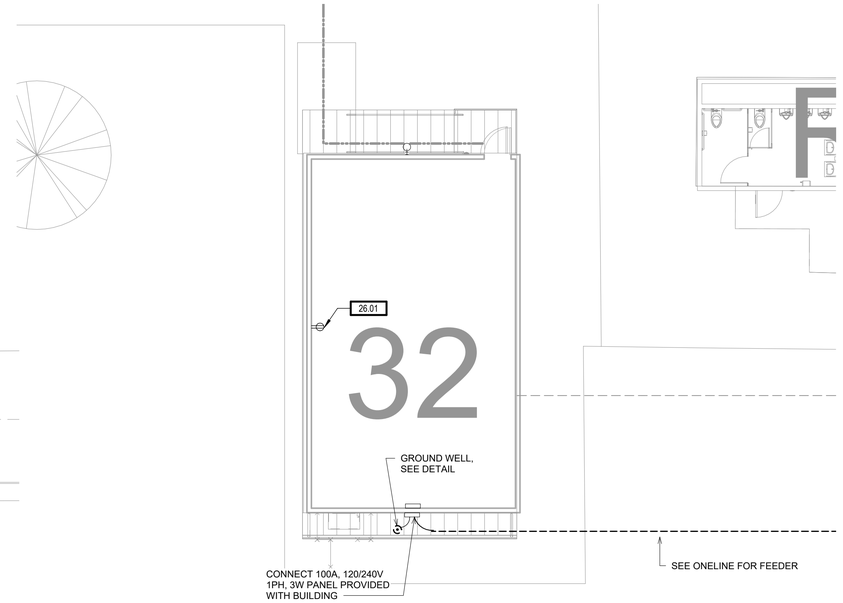

2 ELECTRICAL PLAN

SCALE: 1/8" = 1'-0"

IDENTIFICATION STAMP
DIV. OF THE STATE ARCHITECT
APP: 02-123433 INC:
REVIEWED FOR
SS ☑ FLS ☑ ACS ☑
DATE: 01/20/2026

ARCHITECHNICA
555 West Benjamin Holt Drive, Suite 423
Stockton, California 95207
P: (209) 952-5850
F: (209) 952-2442
E: info@architechnica.net
www.architechnica.net

LICENSED ARCHITECT
TIMOTHY L. DEARBORN
C-29928
RENEWAL
12 / 2027
STATE OF CALIFORNIA

© 2026 ARCHITECHNICA

HCS Engineering inc.
4512 Feather River Dr #F, Stockton, CA 95219
209-478-8270 | www.hcs-eng.com

REGISTERED PROFESSIONAL ENGINEER
RICHARD C. SMITH
No. E14303
Exp. 6-30-27
ELECTRICAL
STATE OF CALIFORNIA

CONSULTANT

ROADRUNNERS
ERMA B. REESE ELEMENTARY

ERMA B REESE
ELEMENTARY

1800 W ELM ST
LODI, CA 95242

LODI UNIFIED SCHOOL
DISTRICT

REVISIONS

PROJECT NO: 2017.xxx
ISSUE SET: Project Status
ISSUE DATE: 1.15.26
DRAWN BY: Author

ELECTRICAL PLAN

ES1.1

1/13/2026 3:04:33 PM

path://john/17/4

FIXTURE SCHEDULE						
Type Mark	Lamp	Description	Manufacturer	Model	Apparent Load	Weight
P5	LED	NEW PEDESTIAN SCALE AREA LIGHT POLE	LITHONIA	DSX0 LED P1 40K 70CRI T5M MVOLT, PE	70 VA	
U4	LED	EXTERIOR WALL SCONCE WITH PHOTOCELL CONTROL, FORWARD THROW OPTICS AND AN EMEGENCY COLD WEATHER BALLAST	LITHONIA	DSXW1 LED 10C 530 40K TFTM MVOLT WC10W	26 VA	

SHEET NOTES	
26.51	REPLACE EXISTING FIXTURE WITH NEW U4, EXTEND UNSWITCHED HOT LEG (2#12) TO BATTERY CHARGING CIRCUIT AND RECONNECT.
26.52	ADD U4 FIXTURE AT 12' WITH PHOTOCELL AND INTERNAL BATTERY BACKUP, CONNECT TO EXISTING EXTERIOR LIGHTING CIRCUIT, INCLUDE UNSWTICHED AND SWITCHED WIRING.
26.53	PROVIDE WALL MOUNT 350VA MICROINVERTER, TIE INTO EXISTING EXTERIOR LIGHTING CIRCUIT. POWER NEW AREA LIGHTS FROM THIS INVERTER.

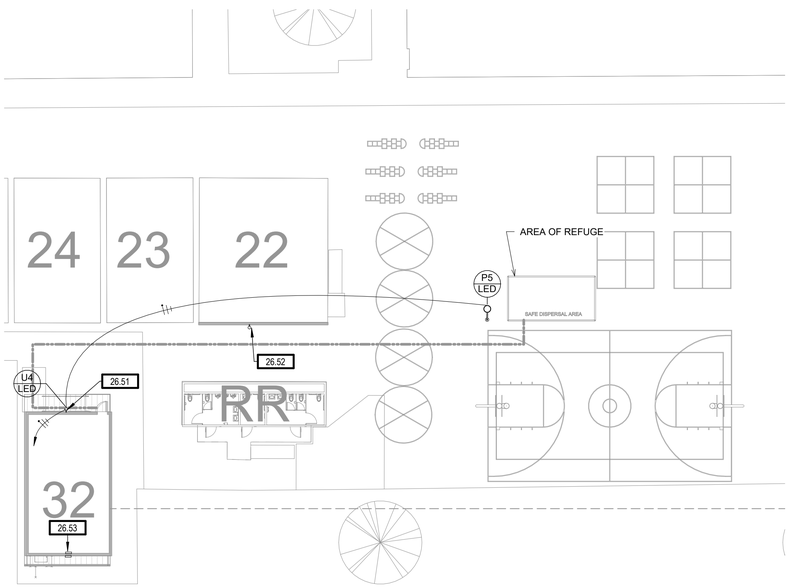

1 SITE LIGHTING PLAN
SCALE: 1" = 20'-0"

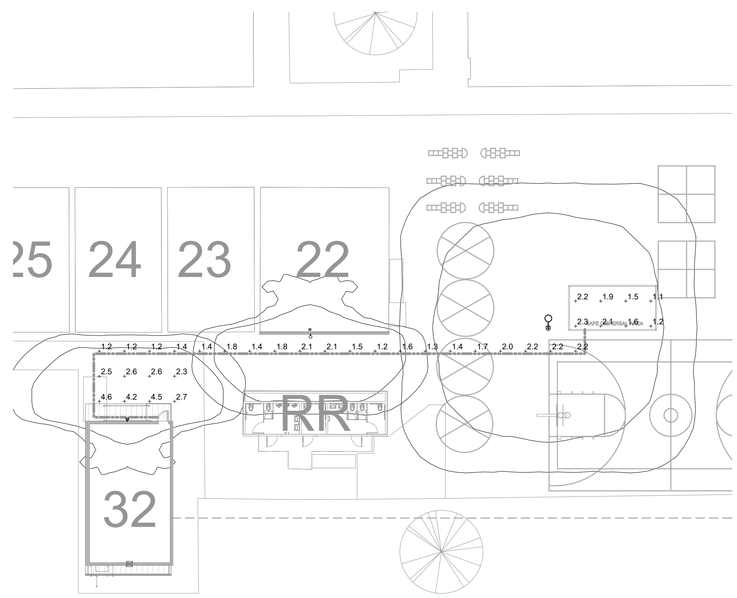

2 PHOTOMETRIC STUDY
SCALE: 1" = 20'-0"

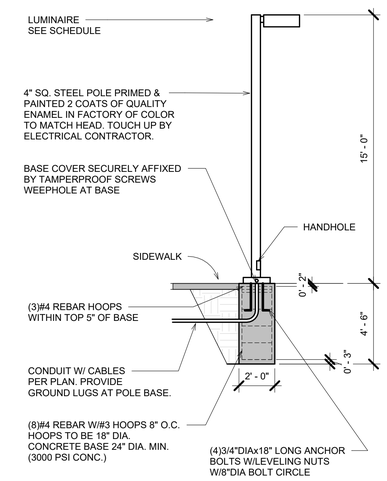

LIGHT POLES AND SUPPORTING FOUNDATIONS ARE NOT SUBJECT TO DSA STRUCTURAL REVIEW IN COMPLIANCE WITH DSA INTERPRETATION OF REGULATIONS IR A-22 SECTION 2.1.2.1 AND APPENDIX ITEM 1.

3 LIGHT STANDARD P5
SCALE: NTS

IDENTIFICATION STAMP
DIV. OF THE STATE ARCHITECT
APP: 02-123433 INC:
REVIEWED FOR
SS ☑ FLS ☑ ACS ☑
DATE: 01/20/2026

ARCHITECHNICA
555 West Benjamin Holt Drive, Suite 423
Stockton, California 95207
P: (209) 952-5850
F: (209) 952-2442
E: info@architechnica.net
www.architechnica.net

LICENSED ARCHITECT
TIMOTHY L. DEARBORN
C-29928
RENEWAL 12 / 2027
STATE OF CALIFORNIA

© 2026 ARCHITECHNICA

HCS Engineering inc.
4512 Feather River Dr #F, Stockton, CA 95219
209-478-8270 | www.hcs-eng.com

REGISTERED PROFESSIONAL ENGINEER
RICHARD C. SMITH
No. E14303
Exp. 6-30-27
ELECTRICAL
STATE OF CALIFORNIA

CONSULTANT

ROADRUNNERS
ERMA B. REESE ELEMENTARY

ERMA B REESE ELEMENTARY

1800 W ELM ST
LODI, CA 95242

LODI UNIFIED SCHOOL DISTRICT

REVISIONS

PROJECT NO: 2017.xxx
ISSUE SET: Project Status
ISSUE DATE: 1.15.26
DRAWN BY: Author

EGRESS PATHWAY LIGHTING

ES1.2

1/13/2026 3:04:35 PM

path://john/17/4

SHEET NOTES

SN.01	PROVIDE (2) CAT6A DATA DROPS FOR TEACHER DESK FOR COMPUTER AND PHONE
SN.02	PROVIDE (2) CAT6A DATA DROPS FOR TV AT A HIGH LEVEL
SN.03	PROVIDE (1) CAT6A FOR WIRELESS ACCESS POINT
SN.04	PROVIDE SURFACE MOUNT CLOCK/SPEAKER TO MATCH THE EXISTING SYSTEM, MOUNT AT 84" TO TOP. PREWIRE WITH CAT 6A CABLES THROUGH EXISTING CONDUITS TO IDF FOR SPEAKER, CLOCK TO BE BATTERY POWERED AND INSTALLED BY THE DISTRICT. PROVIDE ACCESSORIES AND PROGRAMMING AS REQUIRED.

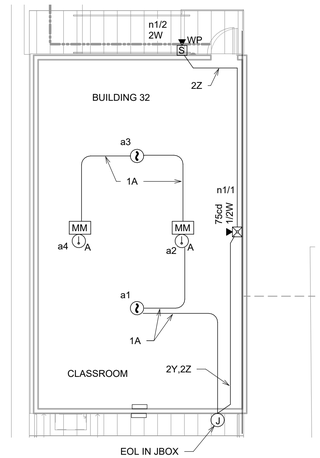

NOTE: HVAC ARE HEAT PUMPS, NO GAS BURNING APPLIANCES IN BUILDING.

1 FIRE ALARM PLAN

SCALE: 1/8" = 1'-0"

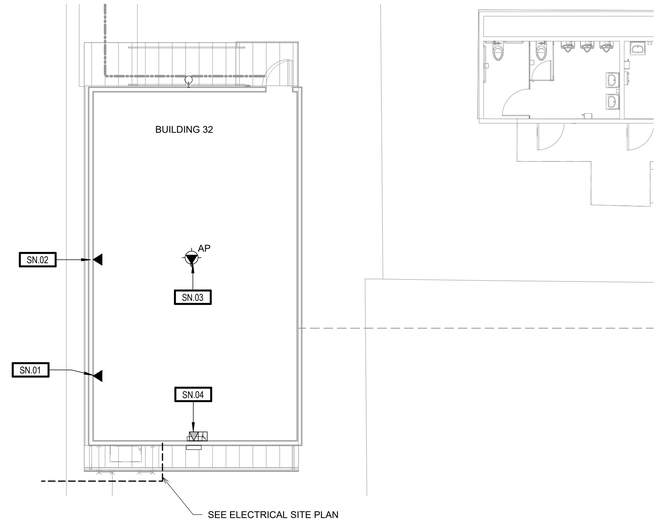

2 SIGNAL PLAN

SCALE: 1/8" = 1'-0"

IDENTIFICATION STAMP
DIV. OF THE STATE ARCHITECT
APP: 02-123433 INC:
REVIEWED FOR
SS ☑ FLS ☑ ACS ☑
DATE: 01/20/2026

ARCHITECHNICA

555 West Benjamin Holt Drive, Suite 423
Stockton, California 95207
P: (209) 952-5850
F: (209) 952-2442
E: info@architechnica.net

www.architechnica.net

LICENSED ARCHITECT
TIMOTHY L. DEARBORN
C-29928
RENEWAL 12 / 2027
STATE OF CALIFORNIA

© 2026 ARCHITECHNICA

HCS Engineering inc.
4512 Feather River Dr #F, Stockton, CA 95219
209-478-8270 | www.hcs-eng.com

REGISTERED PROFESSIONAL ENGINEER
RICHARD C. SMITH
No. E14303
Exp. 6-30-27
ELECTRICAL
STATE OF CALIFORNIA

CONSULTANT

ROADRUNNERS
ERMA B. REESE ELEMENTARY

ERMA B REESE ELEMENTARY

1800 W ELM ST
LODI, CA 95242

LODI UNIFIED SCHOOL DISTRICT

REVISIONS

PROJECT NO: 2017.xxx
ISSUE SET: Project Status
ISSUE DATE: 1.15.26
DRAWN BY: Author

SIGNAL PLANS

ES2.1

1/13/2026 3:04:36 PM

path://john/17/4

STATE OF CALIFORNIA
Outdoor Lighting
CALIFORNIA ENERGY COMMISSION

CERTIFICATE OF COMPLIANCE		NRCC-LTO-E
Project Name: REESE SCHOOL	Report Page:	(Page 3 of 7)
	Date Prepared:	5/5/2025

F. OUTDOOR LIGHTING FIXTURE SCHEDULE

For new or altered lighting systems demonstrating compliance with 140.7 / 170.2(e)6 all new luminaires being installed and any existing luminaires remaining or being moved within the spaces covered by the permit application are included in the Table below. For altered lighting systems using the Existing Power method per 141.0(b)2L only new luminaires being installed and replacement luminaires being installed as part of the project scope are included (ie, existing luminaires remaining or existing luminaires being moved are not included). Outdoor lighting attached to multifamily buildings and controlled from the inside of a dwelling unit are included in Table H. and are not included here. All other multifamily outdoor lighting is included here.

Designed Wattage:

01	02		03	04	05	06	07	08	09	10	
Name or Item Tag	Complete Luminaire Description		Watts per luminaire[1, 2]	How is Wattage determined	Total Number Luminaires[2]	Luminaire Status[3]	Excluded per 140.7(a) / 170.2(e)6A	Design Watts	Cutoff Req. > 6,200 initial lumen output 130.2(b) / 160.5(c)[4]	Field Inspector	
										Pass	Fail
P5	LIGHT STANDARD	☐ Linear	70	Mfr. Spec	1	New	☐	70	NA: < 6200 lumens	☐	☐
U4	WALL PACK	☐ Linear	26	Mfr. Spec	2	New	☐	52	NA: < 6200 lumens	☐	☐
							Total Design Watts:	122			

* NOTES: Selections with a * require a note in the space below explaining how compliance is achieved.
EX: Luminaire is lighting a statue; EXCEPTION 2 to 130.2(b)

[1]FOOTNOTES: Authority Having Jurisdiction may ask for Luminaire cut sheets to confirm wattage used for compliance per 130.0(c) / 160.5(b)

[2] For linear luminaires, wattage should be indicated as W/ft instead of Watts/luminaire. Total linear feet should be indicated in column 05 instead of number of luminaires.

[3] Select "New" for new luminaires in a new outdoor lighting project, or for added luminaires in an alteration. Select "Altered" for replacement luminaires in an alteration. Select "Existing to Remain" for existing luminaires within the project scope that are not being altered and are remaining. Select "Existing Reinstalled" for existing luminaires which are being removed and reinstalled as part of the project scope.

[4] Compliance with mandatory shielding requirements is required for luminaires with initial lumen output >= 6,200 unless exempted by 130.2(b)/ 160.5(c)

G. SHIELDING REQUIREMENTS (BUG)

This section does not apply to this project.

STATE OF CALIFORNIA
Outdoor Lighting
CALIFORNIA ENERGY COMMISSION

CERTIFICATE OF COMPLIANCE		NRCC-LTO-E
Project Name: REESE SCHOOL	Report Page:	(Page 2 of 7)
	Date Prepared:	5/5/2025

C. COMPLIANCE RESULTS

Results in this table are automatically calculated from data input and calculations in Tables F through N. Note: If any cell on this table says "COMPLIES with Exceptional Conditions" refer to Table D. Exceptional Conditions for guidance or see applicable Table referenced below.

Calculations of Total Allowed Lighting Power (Watts) 140.7 / 170.2(e)6 or 141.0(b)2L / 180.2(b)4Bv											Compliance Results		
01		02		03		04		05		06	07		08	09
General Hardscape Allowance 140.7(d)1 / 170.2(e)6 (See Table I)	+	Per Application 140.7(d)2 / 170.2(e)6 (See Table J)	+	Sales Frontage 140.7(d)2 (See Table K)	+	Ornamental 140.7(d)2 / 170.2(e)6 (See Table L)	+	Per Specific Area 140.7(d)2 / 170.2(e)6 (See Table M)	OR	Existing Power Allowance 141.0(b)2L / 180.2(b)4Bv (See Table N)	=	**Total Allowed** (Watts)	≥	**Total Actual** (Watts)	**07 must be >= 08**
287	+	---	+	---	+	---	+	---	OR	---	=	287	≥	122	COMPLIES
Shielding Compliance (See Table G for Details)															N/A
Controls Compliance (See Table H for Details)															COMPLIES

D. EXCEPTIONAL CONDITIONS

This table is auto-filled with uneditable comments because of selections made or data entered in tables throughout the form.

E. ADDITIONAL REMARKS

This table includes remarks made by the permit applicant to the Authority Having Jurisdiction.

STATE OF CALIFORNIA
Outdoor Lighting
CALIFORNIA ENERGY COMMISSION

CERTIFICATE OF COMPLIANCE		NRCC-LTO-E
Project Name: REESE SCHOOL	Report Page:	(Page 1 of 7)
Project Address: ELM STREET	Date Prepared:	5/5/2025

This document is used to demonstrate compliance with requirements in 110.9, 130.0, 130.2, 140.7, and 141.0(b)2L for outdoor lighting scopes using the prescriptive path for nonresidential and hotel/motel occupancies. It is also used to document compliance with requirements in 160.5, 170.2(e)6, 180.1(a) and 180.2(b)4Bv for outdoor lighting scopes using the prescriptive path for multifamily and mixed-use occupancies. Multifamily includes dormitory and senior living facilities.

A. GENERAL INFORMATION

01	Project Location (city)	LODI	04 Total Illuminated Hardscape Area (ft^2)	1800
02	Climate Zone	12		
03	Outdoor Lighting Zone per Title 24 Part 1 10.114 or as designated by Authority Having Jurisdiction (AHJ):			
☐	LZ-0: Very Low - Undeveloped Parkland	☒ LZ-2: Moderate - Urban Clusters	☐ LZ-4: High - Must be reviewed by CA Energy Commission for Approval	
☐	LZ-1: Low - Rural Areas	☐ LZ-3: Moderately High - Urban Areas		
05	Occupancy Types within Project			
● All Other Occupancies				

B. PROJECT SCOPE

This table includes outdoor lighting systems that are within the scope of the permit application and are demonstrating compliance using the prescriptive path outlined in 140.7 / 170.2(e)6 or 141.0(b)2L / 180.2(b)4Bv for alterations.

My Project Consists of:

01	02		
☒ New Lighting System	Must Comply with Allowances from 140.7 / 170.2(e)6		
☐ Altered Lighting System	Is your alteration increasing the connected lighting load (Watts)?	◯ Yes	◯ No
03	04	05	
% of Existing Luminaires Being Altered[1]	Sum Total of Luminaires Being Added or Altered	Calculation Method	
☐ < 10% ☐ >= 10% and < 50% ☐ >= 50%			

Please proceed to Table F. Outdoor Lighting Fixture Schedule to define the project's luminaires.

[1] FOOTNOTES: % of Existing Luminaires Being Altered = (Sum Total of Luminaires Being Added or Altered / Existing Luminaires within the Scope of the Permit Application) x 100.

STATE OF CALIFORNIA
Outdoor Lighting
CALIFORNIA ENERGY COMMISSION

CERTIFICATE OF COMPLIANCE		NRCC-LTO-E
Project Name: REESE SCHOOL	Report Page:	(Page 6 of 7)
	Date Prepared:	5/5/2025

M. LIGHTING ALLOWANCE: PER SPECIFIC AREA

This section does not apply to this project.

N. EXISTING CONDITIONS POWER ALLOWANCE (alterations only)

This section does not apply to this project.

O. DECLARATION OF REQUIRED CERTIFICATES OF INSTALLATION

Selections have been made based on information provided in this document. If any selection has been changed by permit applicant, an explanation should be included in Table E. Additional Remarks. These documents must be provided to the building inspector during construction and can be found online

Form/Title
NRCI-LTO-E - Must be submitted for all buildings

P. DECLARATION OF REQUIRED CERTIFICATES OF ACCEPTANCE

Selections have been made based on information provided in this document. If any selection has been changed by permit applicant, an explanation should be included in Table E. Additional Remarks. These documents must be provided to the building inspector during construction and must be completed through an Acceptance Test Technician Certification Provider (ATTCP). For more information visit: http://www.energy.ca.gov/title24/attcp/providers.html

Form/Title	Systems/Spaces To Be Field Verified
NRCA-LTO-02-A - Must be submitted for all outdoor lighting controls except for alterations where controls are added to <= 20 luminaires.	PEDESTRIAN;

STATE OF CALIFORNIA
Outdoor Lighting
CALIFORNIA ENERGY COMMISSION

CERTIFICATE OF COMPLIANCE		NRCC-LTO-E
Project Name: REESE SCHOOL	Report Page:	(Page 5 of 7)
	Date Prepared:	5/5/2025

I. LIGHTING POWER ALLOWANCE (per 140.7 / 170.2(e))

This table includes areas using allowance calculations per 140.7 / 170.2(e). General Hardscape Allowance is per Table 140.7-A/Table 170.2-A while "Use it or lose it" Allowances are per Table 140.7-B /Table 170.2-S. Indicate which allowances are being used to expand sections for user input. Luminaires that qualify for one of the "Use it or lose it" allowances shall not qualify for another "Use it or lose it" allowance.
Outdoor lighting attached to multifamily buildings and controlled from the inside of a dwelling unit are included in Table H. and are not included here. All other multifamily outdoor lighting is included here.

	01			
		"Use it or lose it" Allowance (select all that apply) (select all that apply)		
☒ General Hardscape Allowance Table I (below)	☐ Per Application Table J	☐ Sales Frontage Table K	☐ Ornamental Table L	☐ Per Specific Area Table M

Calculated General Hardscape Lighting Power Allowance per Table 140.7-A for Nonresidential & Hotel/Motel

02	03	04	05	06	07	08	09
Area Description	Area Wattage Allowance (AWA)			Linear Wattage Allowance (LWA)			Total General AWA + LWA (Watts)
	Illuminated Area (ft^2)	Allowed Density (W/ft^2)	Area Allowance (Watts)	Perimeter Length (lf)	Allowed Density (W/lf)	Linear Allowance (Watts)	
PEDESTRIAN	1800	0.019	34.2	350	0.2	52.5	87
Initial Wattage Allowance for Entire Site (Watts):							200
Instances of Initial Wattage Allowance (LZ 0 only)[1]							
Total General Hardscape Allowance (Watts):							287

J. LIGHTING ALLOWANCE: PER APPLICATION

This section does not apply to this project.

K. LIGHTING ALLOWANCE: SALES FRONTAGE

This section does not apply to this project.

L. LIGHTING ALLOWANCE: ORNAMENTAL

This section does not apply to this project.

STATE OF CALIFORNIA
Outdoor Lighting
CALIFORNIA ENERGY COMMISSION

CERTIFICATE OF COMPLIANCE		NRCC-LTO-E
Project Name: REESE SCHOOL	Report Page:	(Page 4 of 7)
	Date Prepared:	5/5/2025

H. OUTDOOR LIGHTING CONTROLS

This table demonstrates compliance with controls requirements for all new or altered luminaires installed as part of the permit application. For alteration projects, luminaires which are existing to remain (ie untouched) and luminaires which are removed and reinstalled (wiring only) do not need to be included in this table even if they are within the spaces covered by the permit application.
Outdoor lighting for nonresidential buildings, parking garages and common service areas in multifamily buildings must be documented separately from outdoor lighting attached to multifamily buildings and controlled from the inside of a dwelling unit

Mandatory Controls for Nonresidential Occupancies, Parking Garages & Common Areas in Multifamily Buildings

01	02	03	04	05	
Area Description	Shut-Off 130.2(c)1 / 160.5(c)	Auto-Schedule 130.2(c)2 / 160.5(c)	Motion Sensor 130.2(c)3 / 160.5(c)	Field Inspector	
				Pass	Fail
PEDESTRIAN	Photocontrol	Provided	NA: Each Luminaire <= 40 Watts	☐	☐

[1] FOOTNOTE: Text has been abbreviated, please refer to Table 160.5-A to confirm compliance with the specific light source technologies listed.

[2]Authority having jurisdiction may ask for cutsheets or other documentation to confirm compliance of light source.

[3]Recessed luminaires marked for use in fire-rated installations, and recessed luminaires installed in non-insulated ceilings are excepted from ii and iii.

STATE OF CALIFORNIA
Outdoor Lighting
CALIFORNIA ENERGY COMMISSION

CERTIFICATE OF COMPLIANCE		NRCC-LTO-E
Project Name: REESE SCHOOL	Report Page:	(Page 7 of 7)
Project Address: ELM STREET	Date Prepared:	5/5/2025

DOCUMENTATION AUTHOR'S DECLARATION STATEMENT

I certify that this Certificate of Compliance documentation is accurate and complete.

Documentation Author Name: Richard Smith	Documentation Author Signature:
Company: HCS Engineering, Inc.	Signature Date: 2025-5-5
Address: 4512 Feather River Drive #F	CEA/ HERS Certification Identification (if applicable): PE 14303
City/State/Zip: Stockton CA 95219	Phone: 209-478-8270

RESPONSIBLE PERSON'S DECLARATION STATEMENT

I certify the following under penalty of perjury, under the laws of the State of California:

1. The information provided on this Certificate of Compliance is true and correct.
2. I am eligible under Division 3 of the Business and Professions Code to accept responsibility for the building design or system design identified on this Certificate of Compliance (responsible designer)
3. The energy features and performance specifications, materials, components, and manufactured devices for the building design or system design identified on this Certificate of Compliance conform to the requirements of Title 24, Part 1 and Part 6 of the California Code of Regulations.
4. The building design features or system design features identified on this Certificate of Compliance are consistent with the information provided on other applicable compliance documents, worksheets, calculations, plans and specifications submitted to the enforcement agency for approval with this building permit application.
5. I will ensure that a completed signed copy of this Certificate of Compliance shall be made available with the building permit(s) issued for the building, and made available to the enforcement agency for all applicable inspections. I understand that a completed signed copy of this Certificate of Compliance is required to be included with the documentation the builder provides to the building owner at occupancy.

Responsible Designer Name: RICHARD SMITH, PE	Responsible Designer Signature:
Company: HCS ENGINEERING	Date Signed: 2025-05-05
Address: 4512 FEATHER RIVER DR #F	License: E14303
City/State/Zip: STOCKTON CA 95219	Phone: 2094788270

1/13/2026 3:04:38 PM

path://john/17/4

IDENTIFICATION STAMP
DIV. OF THE STATE ARCHITECT
APP: 02-123433 INC:
REVIEWED FOR
SS ☑ FLS ☑ ACS ☑
DATE: 01/20/2026

ARCHITECHNICA
555 West Benjamin Holt Drive, Suite 423
Stockton, California 95207
P: (209) 952-5850
F: (209) 952-2442
E: info@architechnica.net
www.architechnica.net

LICENSED ARCHITECT TIMOTHY L. DEARBORN C-29928 RENEWAL 12 / 2027 STATE OF CALIFORNIA

© 2026 ARCHITECHNICA

HCS Engineering inc.
4512 Feather River Dr #F, Stockton, CA 95219
209-478-8270 | www.hcs-eng.com

REGISTERED PROFESSIONAL ENGINEER RICHARD C. SMITH No. E14303 Exp. 6-30-27 ELECTRICAL STATE OF CALIFORNIA

CONSULTANT

ROADRUNNERS ERMA B. REESE ELEMENTARY

ERMA B REESE ELEMENTARY

1800 W ELM ST
LODI, CA 95242

LODI UNIFIED SCHOOL DISTRICT

REVISIONS

PROJECT NO: 2017.xxx
ISSUE SET: Project Status
ISSUE DATE: 1.15.26
DRAWN BY: Author

COMPLIANCE

ET24

Pelican Wireless LAN Layout

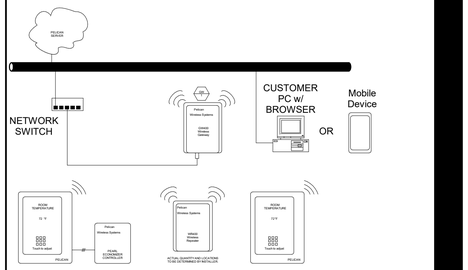

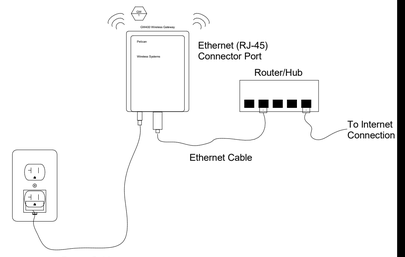

FACTORY IP ADDRESS GATEWAY WILL CONNECT AUTOMATICALLY TO PELICAN SERVER AFTER SERIAL NO. OF GATEWAY IS REGISTERED ON PELICAN SITE

Go to: https://www.pelicanwireless.com/new-site-setup/

2 PELICAN EMS - WIRELESS LAN LAYOUT
SCALE: 6" = 1'-0"

SEQUENCE OF OPERATION

GENERAL:
THE NETWORK THERMOSTAT SHALL BE PROGRAMMED AS DIRECTED BY THE DISTRICT FOR OCCUPIED PERIODS,UNOCCUPIED PERIODS AND HOLIDAYS. THE NETWORK THERMOSTAT SHALL BE CAPABLE OF RECEIVING A UTILITY COMPANY " AUTOMATED DEMAND REDUCTION" (ADR) SIGNAL VIA WIRELESS SIGNAL FROM INTERNET CONNECTED WIRELESS GATEWAY (CRITICAL ZONES SHALL NOT BE IMPACTED BY "ADR" CALL). THE UNIT SHALL PROVIDE MINIMUM OUTSIDE AIR VENTILATION FOR 1HOUR (ADJ.) PRIOR TO SCHEDULED OCCUPANCY. DURING PERIODS OF OCCUPANCY, THE SUPPLY FAN SHALL BE ENABLED AND STAGED HEATING OR COOLING SHALL BE PROVIDED TO MAINTAIN ROOM SETPOINTS. THE ECONOMIZER SHALL BE ENABLED TO PROVIDE FREE COOLING & DAMDIRECTCE (FDD) ECONOMIZER/VENTILATION CONTROLLER AND TEMPERATURE SENSEDCE THE FDD ECONOMIZER CONTROLLER SHALL GENERATE ALARMS WHEN A FAILURE OF THE SUPPLY, OUTSIDE OR ROOM TEMPERATURE SENSOR IS DETECTED. ALSO, THE FDD ECONOMIZER CONTROLLER SHALL GENERATE ALARMS IF A FAILURE OF THE ECONOMIZER DAMPER IS DETECTED AS FOLLOW: A) NOT ECONOMIZING-DAMPER NOT OPENING WHEN COMMANDED, B) ECONOMIZING WHEN NOT NEEDED-DAMPER OPEN WHEN NOT COMMANDED, C) EXCESS OUTDOOR AIR- DAMPER OPEN WHEN COMMANDED TO CLOSE, D) DAMPER NOT MODULATING WHEN COMMANDED TO SUPPLY. THE FDD ECONOMIZER CONTROLLER SHALL ALSO GENERATE ALARMS IF A FAILURE OF THE CONTROLLER OR THERMOSTAT ELECTRONICS IS DETECTED OR IF THE EQUIPMENT IS UNABLE TO HEAT OR COOL THE CONDITIONED SPACE. THE OUTSIDE AIR DAMPER SHALL MODULATE FULLY CLOSED WHENEVER THE UNIT IS DISABLED.

COOLING:
ON A CALL FOR COOLING, IF THE OUTSIDE AIR TEMPERATURE IS BELOW THE ECONOMIZER LOCKOUT TEMPERATURE SET AT 75 DEG F (ADJ.), THE ECONOMIZER DAMPERS SHALL MODULATE AS NEEDED TO OPERATE AS THE FIRST STAGE OF COOLING. ON AN ADDITIONAL CALL FOR COOLING, IF THE OUTSIDE AIR TEMPERATURE IS ABOVE THE COOLING LOCKOUT TEMPERATURE SET AT 60 DEG F(ADJ.), STAGES OF DX COOLING SHALL BE ENABLED IN CONJUNCTION WITH THE ECONOMIZER TO MAINTAIN ROOM COOLING SETPOINT. IF SETPOINT STILL CANNOT BE MAINTAINED, OR IF THE OUTSIDE AIR TEMPERATURE RISES ABOVE THE ECONOMIZER LOCKOUT TEMPERATURE, THE ECONOMIZER DAMPERS SHALL MODULATE TO MINIMUM POSITION AND STAGES OF DX COOLING SHALL BE ENABLED TO MAINTAIN ROOM COOLING SETPOINT.

HEATING:
ON A CALL FOR HEATING, IF THE OUTSIDE AIR TEMPERATURE IS BELOW THE HEATING LOCKOUT TEMPERATURE SET AT 65 DEG F (ADJ.), THE ECONOMIZER DAMPERS SHALL MODULATE TO MINIMUM POSITION. AND STAGES OF HEATING SHALL BE ENABLED TO MAINTAIN ROOM HEATING SETPOINT.

DEMAND CONTROLLED VENTILATION:
CO2 CONTROL OVER THE ECONOMIZER SHALL ALWAYS TAKE PRECEDENCE OVER HEATING OR COOLING TO MAINTAIN A ZONE CO2 LEVEL LESS THEN 800 PPM (ADJUSTABLE). WHEN CO2 LEVELS RISE ABOVE 800 PPM (ADJUSTABLE), THE ECONOMIZER SHALL MODULATE OPEN AS NEEDED TO MAINTAIN CO2 LEVELS BELOW 800 PPM (ADJUSTABLE). IF THE OUTSIDE AIR DAMPER REACHES ITS UPPER MAXIMUM POSITION AND CO2 LEVELS ARE STILL RISING, THE OUTSIDE AIR DAMPER SHALL MODULATE TO MINIMUM POSITION AND THE FAN SHALL BE ENABLED TO RUN CONTINUOUSLY (ADJUSTABLE). ONCE CO2 LEVELS HAVE DROPPED BELOW 800 PPM (ADJUSTABLE), THE ECONOMIZER SHALL RETURN TO THE POSITION AS DETERMINED BY THE CALL FOR HEATING OR COOLING.

WHP UNIT WITH ECONOMIZER AND CO2

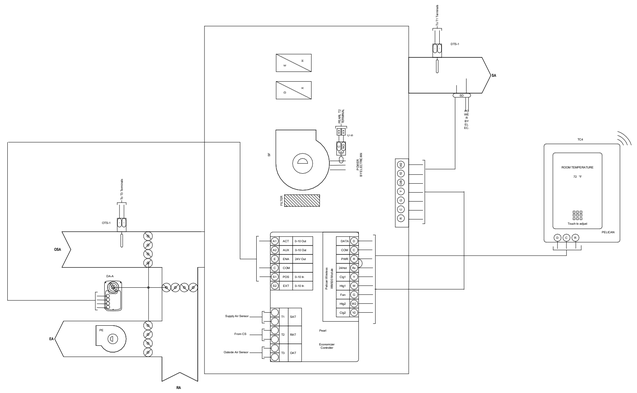

1 PELICAN EMS CONTROLS - WHP
SCALE: 6" = 1'-0"

IDENTIFICATION STAMP
DIV. OF THE STATE ARCHITECT
APP: 02-123433 INC:
REVIEWED FOR
SS ☑ FLS ☑ ACS ☑
DATE: 01/20/2026

ARCHITECHNICA
555 West Benjamin Holt Drive, Suite 423
Stockton, California 95207
P: (209) 952-5850
F: (209) 952-2442
E: hello@architechnica.net

www.architechnica.net

LICENSED ARCHITECT
TIMOTHY L. DEARBORN
C-29928
RENEWAL 12 / 2027
STATE OF CALIFORNIA

© 2026 ARCHITECHNICA

CONSULTANT

ROADRUNNERS
ERMA B. REESE ELEMENTARY

ERMA B REESE ELEMENTARY

1800 W ELM ST,
LODI, CA 95242

LODI UNIFIED SCHOOL DISTRICT

REVISIONS

PROJECT NO: 2025-03
ISSUE SET: CD
ISSUE DATE: 12/11/2025
DRAWN BY: TLD

PELICAN EMS DETAILS

M1.0

1/14/2026 9:13:21 AM C:\Users\hayal\Documents\Revit_2023\2025-03_Erma B Reese_Bridged Portables_ORIGINAL Ramp_hayalNRD3T.rvt

PLUMBING FIXTURE SCHEDULE

MARK	MAKE & MODEL	DESCRIPTION	TRIM	REMARKS
WC–1		EXISTING WALL HUNG ACCESSIBLE FLUSH VALVE WATER CLOSET		WATTS ISCA–141–4 WALL CARRIER
LAV–1		EXISTING WALL HUNG LAVATORY		ZURN Z1231 CARRIER DEARBORN BRASS 704–1 P–TRAP AND JUST J–ADA–115–FS DRAIN E–7 PROVIDE BRASS CRAFT POLISHED CHROMIUM PLATED COPPER TUBE AND COMPRESSION SHUT–OFF STOPS R1520DLS/R1520AS OR S1715ABC.

PIPE MATERIAL SCHEDULE

A.G. = ABOVE GRADE
B.G. = BELOW GRADE

SERVICES		CAST IRON	SCH. 40 BLACK STEEL	COPPER TYPE L	COPPER TYPE K			REMARKS
WATER	A.G.			●				
WATER	B.G.				●			
WASTE	A.G.	●						
WASTE	B.G.	●						
VENT	A.G.	●						
VENT	B.G.	●						

FIXTURE CONNECTION SIZE

FIXTURE	SYM	WASTE BRANCH	WASTE OUTLET	TRAP	VENT	COLD WATER BRANCH	COLD WATER OUTLET	HOT WATER BRANCH	HOT WATER OUTLET
WATER CLOSET (F.V.)	WC	4"	4"	–	2",4"	1½"	1"	–	–
LAVATORY	LAV	2"	1½"	1½"	1½"	3/4"	3/4"	3/4"	3/4"

PLUMBING LEGEND

SYMBOL	DESCRIPTION
—CW	COLD WATER LINE
—HW	HOT WATER LINE
—SS	SANITARY SEWER LINE
—HV	HORIZONTAL VENT
—RWL	RAIN WATER LEADER
—CD—	CONDENSATE DRAIN
	CLEAN OUT
	WALL CLEAN OUT
—FCO	FLOOR CLEAN OUT
—YCO	YARD CLEAN OUT TO GRADE
	FLOOR DRAIN
	FLOOR SINK
	TRAP PRIMER
HB	HOSE BIBB
	GATE VALVE
SOV	SHUT OFF VALVE
	BALANCING VALVE
	GAS COCK
	GLOVE VALVE
	PRESSURE REDUCING VALVE (PRV)
	CIRCUIT SETTER BALANCING VALVE
	CHECK VALVE
	EXPANSION JOINT
WHA #100	WATER HAMMER ARRESTER WITH SIZE
V, VR, VTR	VENT, VENT RISER, VENT THRU ROOF
SS, SSD	SEWER, SANITARY SEWER DROP
CW, D, R	COLD WATER (DROP)(RISER)
HW, D, R	HW SUPPLY (DROP)(RISER)
HWR	HOT WATER RETURN
THW	TEMPERED HOT WATER
G	NATURAL GAS LOW PRESSURE
MPG	MEDIUM PRESSURE GAS
HPG	HIGH PRESSURE GAS
LPG	PROPANE GAS
CA	COMPRESSED AIR
DL	DRAIN LINE
DS	DOWN SPOUT
RD	ROOF DRAIN
AD	AREA DRAIN
AC	ABOVE CEILING
BG	BELOW GRADE
MV	MIXING VALVE
WC	WATER CLOSET
UR	URINAL
LAV	LAVATORY
S	SINK
SS	SERVICE SINK
WM	WASHING MACHINE
DF	DRINKING FOUNTAIN
GD	GARGABE DISPOSAL
F	FIRE PROTECTION LINE
FHC	FIRE HOSE CABINET
FHS	FIRE HOSE STANDPIPE
INV.	INVERT ELEVATION
FG	FINISHED GARDE
F/G	FUEL GAS
◆P.O.C.	POINT OF CONNECTION
AP	ACCESS PANEL
CI	CAST IRON
VC	VITRIFIED CLAY
℄	CENTER LINE
HDR	HEADER
DN	DOWN
MBH	THOUSANDS OF BTU PER HOUR
NIPC	NOT IN PLUMBING CONTRACT
	UNDER PLUMBING CONTRACT
D.L.	DEVELOPED LENGTH

PLUMBING MANDATORY MEASURES

1. SCOPE

PROVIDE A COMPLETE DOMESTIC PLUMBING SYSTEM AS DELINEATED ON THE PLUMBING DRAWINGS, INCLUDING SERVICE PIPING & FINAL CONNECTIONS TO EQUIPMENT FURNISHED & INSTALLED BY OTHER TRADES AS SHOWN ON ARCHITECTURAL, ELECTRICAL, MECHANICAL OR OTHER DRAWING OF THE CONTRACT DOCUMENT.

2. CODE

A. ALL WORK AND MATERIALS SHALL BE IN FULL ACCORDANCE WITH THE LATEST CODES, RULES, AND REGULATIONS OF THE FOLLOWING:

1. 2022 CALIFORNIA GREEN CODE BUILDING CODE
2. 2022 CALIFORNIA PLUMBING CODE
3. 2022 CALIFORNIA MECHANICAL CODE
4. TITLE 24, CALIFORNIA BUILDING STANDARDS CODE
5. 2022 CALIFORNIA ELECTRICAL CODE
6. 2022 CALIFORNIA FIRE CODE
7. 2022 CALIFORNIA ENERGY CODE
8. 2022 CALIFORNIA GREEN BUILDING CODE

B. RULINGS AND INTERPRETATIONS OF THE ENFORCING AGENCY WILL BE CONSIDERED PART OF THE REGULATIONS.

C. NOTHING IN THESE SPECIFICATIONS IS TO BE CONSTRUED TO PERMIT WORK NOT CONFORMING TO THE EBOVE, AND EXPENCE IN COMPLIANCE WITH THE ABOVE SHALL BE BORNE BY THE CONTRACTOR.

D. WHENEVER THE SPECIFICATIONS AND DRAWINGS REQUIRE HIGHER STANDARDS OR LARGER SIZES THAN THOSE REQUIRED BY THE ORDINANCES AND STATUTES, THE SPECIFICATIONS AND DRAWINGS SHALL TAKE PRIORITY OVER THE SPECIFIC ORDINANCES AND STATUTES.

3. PROVIDE CP CLEANOUT COVERS AT ALL CLEANOUT LOCATIONS.
4. VERIFY LOCATIONS AND DEPTH FOR ALL UTILITIES BEFORE COMMENCING PROJECTS.
5. PLUMB. DWG'S ARE DIAGRAMATIC AND DO NOT SHOW ROUGH–IN HEIGHTS & LOCATIONS.
6. INSTALL ALL PLUMB. IN CONFORMANCE WITH "CALIFORNIA PLUMBING CODE '22 EDITION.
7. COND. DRAINS TO BE TERMINATED IN AN APPROVED LOCATION.
8. PROVIDE SUBMITTALS AND CATALOG CUTS IN AN APPROVED LOCATION.
9. MAINTAIN AS BUILT DRAWINGS ON JOBSITE & PROVIDE ONE SET OF SEPIA DRAWINGS SHOWN DIMENSIONED LOCATIONS OF ALL CONCEALED PIPING.
10. NEW WATER CLOSETS AND ASSOCIATED FLUSHOMETER VALVES, SHALL USE NO MORE THAN 1.28 GALLONS PER FLUSH AND SHALL MEET STANDARDS SET BY A.N.S.I. STANDARD A112.19.2. URINALS AND ASSOCIATED FLUSH VALVES SHALL USE NO MORE THAN .125 GALLON PER FLUSH AND SHALL MEET STANDARDS SET BY A.N.S.I. STANDARD A112.19.2 & SECTION 17921.3(B) H&S CODE.

---------- PLUMBING MANDATORY NOTES ----------

1. VENT EACH PLUMBING PER SECTION 904.0 CPC.
2. SIZE VENTS PER TABLE 7–5 CPC.
3. INSTALL CLEANOUTS ON HORIZONTAL DRAINAGE PIPING PER SECTION 719, 707.4 CPC. CLEANOUTS SHALL BE REQUIRED ON HORIZONTAL DRAIN LINES SERVING SINKS AND URINALS.
4. INSTALL BUILDING SEWER CLEANOUTS PER CPC.
5. PROVIDE PROPER CROSS–CONNECTION CONTROL PER CPC.

DSA MEP COMPONENT ANCHORAGE NOTES

MEP COMPONENT ANCHORAGE NOTE

ALL MECHANICAL, PLUMBING, AND ELECTRICAL COMPONENTS SHALL BE ANCHORED AND INSTALLED PER THE DETAILS OF THE DSA APPROVED CONSTRUCTION DOCUMENTS. THE FOLLOWING COMPONENTS SHALL BE ANCHORED OR BRACED TO MEET THE FORCE AND DISPLACEMENT REQUIREMENTS PRESCRIBED IN THE 2022 CBC SECTIONS 1617A.1.18 THROUGH 1617A.1.26 ASCE 7–16 CHAPTERS 13, 26, AND 30:

1. ALL PERMANENT EQUIPMENT AND COMPONENTS
2. TEMPORARY, MOVABLE, OR MOBILE EQUIPMENT THAT IS PERMANENTLY ATTACHED (E.G.) HARD WIRED) TO THE BUILDING UTILITY SERVICES SUCH AS ELECTRICITY, GAS OR WATER. "PERMANENTLY ATTACHED" SHALL INCLUDE ALL ELECTRICAL CONNECTIONS EXCEPT PLUGS FOR 110/220 VOLT RECEPTORS HAVING A FLEXIBLE CABLE.
3. TEMPORARY, MOVABLE, OR MOBILE EQUIPMENT WHICH IS HEAVIER THAN 400 POUNDS OR HAS A CENTER OF MASS LOCATED 4 FEET OR MORE ABOVE THE ADJACENT FLOOR OR ROOF LEVEL THAT DIRECTLY SUPPORT THE COMPONENT IS REQUIRED TO BE RESTRAINED IN A MANNER APPROVED BY THE DSA.

THE FOLLOWING MECHANICAL AND ELECTRICAL COMPONENTS SHALL BE POSITIVELY ATTACHED TO THE STRUCTURE, BUT NEED NOT DEMONSTRATE DESIGN COMPLIANCE WITH THE REFERENCES NOTED ABOVE. THESE COMPONENTS SHALL HAVE FLEXIBLE CONNECTIONS PROVIDED BETWEEN THE COMPONENT AND ASSOCIATED DUCTWORK, PIPING AND CONDUIT. FLEXIBLE CONNECTIONS MUST ALLOW MOVEMENT IN BOTH TRANSVERSE AND LONGITUDINAL DIRECTIONS.

A. COMPONENTS WEIGHING LESS THAN 400 POUNDS AND HAVING A CENTER OF MASS LOCATED 4 FEET OR LESS ABOVE THE ADJACENT FLOOR OR ROOF LEVEL THAT DIRECTLY SUPPORT THE COMPONENT.

B. COMPONENTS WEIGHING LESS THAN 20 POUNDS, OR IN THE CASE OF DISTRIBUTING SYSTEMS, LESS THAN 5 POUNDS PER FOOT, WHICH ARE SUSPENDED FROM A ROOF OR FLOOR OR HUNG FROM A WALL.

THE ANCHORAGE OF ALL MECHANICAL, ELECTRICAL, PLUMBING COMPONENTS SHALL BE SUBJECT TO THE APPROVAL OF THE DESIGN PROFESSIONAL IN GENERAL RESPONSIBLE CHARGE OR STRUCTURAL ENGINEER DELEGATED RESPONSIBILITY AND ACCEPTANCE BY DSA. THE PROJECT INSPECTOR WILL VERIFY THAT ALL COMPONENTS AND EQUIPMENT HAVE BEEN ANCHORED IN ACCORDANCE WITH ABOVE REQUIREMENTS.

PIPING, DUCTWORK, AND ELECTRICAL DISTRIBUTION SYSTEMS BRACING NOTE

PIPING, DUCTWORK, AND ELECTRICAL DISTRIBUTION SYSTEM SHALL BE BRACED TO COMPLY WITH THE FORCES AND DISPLACEMENTS PRESCRIBED IN ASCE 7 SECTION 13.3.3 AS DEFINED IN ASCE 7 SECTIONS 13.6.5, 13.6.6, 13.6.7, AND 13.6.8; AND 2022 CBC, SECTIONS 1617A.1.24, 1617A.1.25, AND 1617A.1.26.

THE METHOD OF SHOWING BRACING AND ATTACHMENTS TO THE STRUCTURE FOR THE IDENTIFIED DISTRIBUTION SYSTEM ARE AS NOTED BELOW. THE MEP DESIGN PROFESSIONAL ENGINEER RESPONSIBLE FOR CONTENT ON THESE SHEETS HAS VERIFIED THAT THE DESIGN METHODS IDENTIFIED BELOW ARE IN ACCORDANCE WITH DSA IR 16–13.

MECHANICAL PIPING (MP), MECHANICAL DUCTS (MD), PLUMBING PIPING (PP), ELECTRICAL DISTRIBUTION SYSTEMS (E):

MP■ MD■ PP■ E■	OPTION 1:	PROJECT–SPECIFIC DESIGN
MP□ MD□ PP□ E□	OPTION 2:	DESIGN BASED ON OSHPD OPM. WITHIN PROJECT SUBMITTAL
MP□ MD□ PP□ E□	OPTION 3:	DESIGN BASED ON OSHPD OPM. DEFERRED SUBMITTAL

DEMO KEY NOTE SCHEDULE

1. REMOVE (E) PLUMBING FIXTURE SHOWN CROSSHATCHED. CLEAN THE EXISTING PLUMBING FIXTURE FOR RE–USE IN NEW LOCATION PER REMODEL PLUMBING FLOOR PLAN.
2. REMOVE (E) LAVATORY SHOWN CROSSHATCHED AND CAP (E) PLUMBING SERVICES BEHIND FINISHED SURFACE. CLEAN (E) LAVATORY AND REFER TO REMODEL PLUMBING FLOOR PLAN FOR RE–USE OF THE LAVATORY.

REMODEL KEY NOTE SCHEDULE

1. ◆P.O.C. CONNECT (N) ½" CW TO (E) 1½" CW. (5)
2. ◆P.O.C. CONNECT (N) 2" SS TO (E) 2" SS. (5)
3. RE–INSTALL (E) WATER CLOSET IN NEW LOCATION AND HEIGHT INDICATED ON THE ARCHITECTURAL DRAWINGS. PROVIDE (N) WALL CARRIER AND ◆P.O.C. WATER, SEWER AND VENT CONNECTIONS TO (E) PLUMBING SERVICES THAT SERVED THE REMOVED WATER CLOSET.
4. RE–INSTALL (E) LAVATORY IN NEW LOCATION AND HEIGHT INDICATED ON THE ARCHITECTURAL DRAWINGS. PROVIDE (N) WALL CARRIER, TRAP ARM, P–TRAP, STOP VALVES AND TRAP WRAP ON ALL PLUMBING SERVICES BELOW THE LAVATORY.
5. PLUMBING CONTRACTOR TO VERIFY EXACT SIZE AND LOCATION OF EXISTING AND TO MAKE THE NECESSARY OFFSETS AND ADJUSTMENTS TO CARRY OUT THE INTENT OF THE DESIGN.
6. NO WORK REQUIRED ON EXISTING PLUMBING FIXTURE.
7. ◆P.O.C. CONNECT (N) 1½" HV TO (E) 1½" HV. (5)

GENERAL NOTES

1. FOR FIX. CONNECTION SIZES TO THE VARIOUS FIXTURES, REFER TO THE FIXTURE CONNECTION SCHEDULE ON THIS SHEET.
2. SLOPE ALL SANITARY SEWER LINES WITHIN BUILDING AT ¼"/FT.

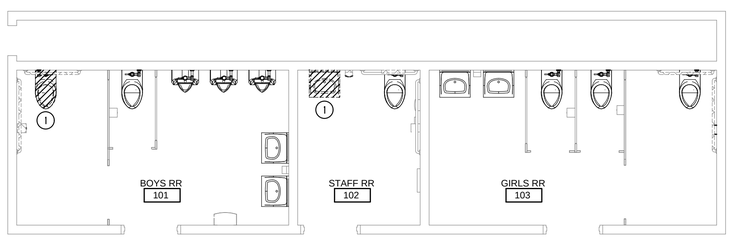

DEMOLITION PLUMBING FLOOR PLAN

SCALE: ¼"=1'-0"

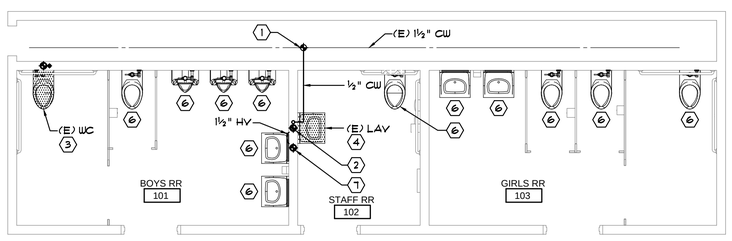

REMODEL PLUMBING FLOOR PLAN

SCALE: ¼"=1'-0"

GRAPHIC SYMBOLS

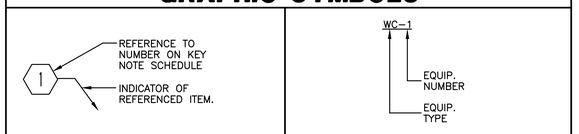

KEY NOTE | EQUIP. DESIG. KEY

IDENTIFICATION STAMP
DIV. OF THE STATE ARCHITECT
APP: 02-123433 INC:
REVIEWED FOR
SS ☑ FLS ☑ ACS ☑
DATE: 01/20/2026

ARCHITECHNICA
555 West Benjamin Holt Drive, Suite 423
Stockton, California 95207
P: (209) 952-5850
F: (209) 952-2442
E: hello@architechnica.net
www.architechnica.net

LICENSED ARCHITECT TIMOTHY L. DEARBORN C-29928 RENEWAL 12 / 2027 STATE OF CALIFORNIA

© 2026 ARCHITECHNICA

REGISTERED PROFESSIONAL ENGINEER ALEXANDER L. SCHEFLO M 025588 Exp. 09-30-26 MECHANICAL STATE OF CALIFORNIA

ALEXANDER SCHEFLO and ASSOCIATES, Inc.
Mechanical Engineers (209) 948-9761
2926 Pacific Ave. Stockton, Ca. 95204

ALL DRAWINGS AND WRITTEN MATERIAL APPEARING HEREIN CONSTITUTE THE ORIGINAL AND UNPUBLISHED WORK OF THE ENGINEER AND THE SAME MAY NOT BE USED, DUPLICATED, OR DISCLOSED WITHOUT THE WRITTEN CONSENT OF THE ENGINEER.
© Alexander Scheflo & Assoc., Inc

CONSULTANT

ROADRUNNERS ERMA B. REESE ELEMENTARY

ERMA B REESE ELEMENTARY

1800 W ELM ST,
LODI, CA 95242

LODI UNIFIED SCHOOL DISTRICT

REVISIONS		

PROJECT NO: 2025-03
ISSUE SET: CD
ISSUE DATE: 10/30/2025
DRAWN BY: S. PRUITT

PLUMBING DEMO AND REMODEL FLOOR PLANS, SCHEDULES AND DETAILS

PP2.0

C:\Users\hayal\Documents\Revit_2023\2025-03_Erma B Reese_Bridged Portables_hayalNRD3T.rvt

10/17/2025 9:10:58 AM

LODI
ERMA B. REESE ES
(1) 24X40
LEFT HAND
SN#: C-23-2987 A/B

Class Leasing

STOCKPILE# 347
(125) 24X40 CLASSROOMS

HIGH SEISMIC
DESIGN CRITERIA
FILE #: PC-128
2022 CBC

PC # 04-123059
24' x 40' EXPANDABLE TO 120' x 40'

Sheet List	
Sheet Number	Sheet Name
Cover	
A0.0.1	PROJECT OPTIONS SCHEDULE
A0.1	TYPICAL KEY PLAN AND SCHEDULES, GEN NOTES,
A0.2	SIGNAGE AND SYMBOLS
~~A0.3~~	~~DSA-103 T&I CONCRETE FLOORS~~
A0.4	DSA-103 T&I PLYWOOD FLOORS
A0.5	CALGREEN SPEC'S
A0.6	CAL GREEN CHECKLIST
A0.7	CAL GREEN CHECKLIST
A0.8	CAL GREEN CHECKLIST
Architectural	
A0.0	COVER SHEET
A1.0	24x40 FLOOR PLAN
~~A1.1~~	~~36x40 FLOOR PLAN~~
~~A1.2~~	~~48x40 thru 120x40 FLOOR PLAN~~
~~A2.1(A)~~	~~ARCHITECTURAL DETAILS (WOOD FRAMING SHTG FINISH)~~
A2.1(B)	ARCHITECTURAL WUI DETAILS (WOOD FRAMING SHTG FINISH)
~~A2.2~~	~~ARCHITECTURAL DETAILS (WOOD FRAMING PLASTER FINISH)~~
~~A2.5(A)~~	~~ARCHITECTURAL DETAILS (1 HR WOOD FRAMING SHTG FINISH)~~
~~A2.5(B)~~	~~ARCHITECTURAL WUI DETAILS (1 HR WOOD FRAMING SHTG FINISH)~~
~~A2.6~~	~~ARCHITECTURAL DETAILS (1 HR WOOD FRAMING PLASTER FINISH)~~
A2.7	WUI NOTES AND CRITERIA
A2.9	ARCHITECTURAL DETAILS (FLOOR)
~~A2.9.1~~	~~DETERIORATION PROT NON-WOOD FINISH SIDING CONC FLOOR - WD STUDS~~
~~A2.9.2~~	~~DETERIORATION PRO. STUCCO EXTERIOR FINISH CONC FLOOR WD STUDS~~
~~A2.9.3~~	~~DETERIORATION PRO. NON-WOOD FINISH SIDING WOOD FLOOR - WD STUDS~~
~~A2.9.4~~	~~DETERIORATION PRO. STUCCO EXTERIOR FINISH WOOD FLR WD STUDS~~
~~A2.9.5~~	~~DETERIORATION T-111 EXTERIOR FINISH WOOD FLR WOOD STUDS~~
~~A3.0~~	~~ADDITIONAL FIRE RATING DETAILS AND NOTES~~
A3.0.1	FIRE SEPARATION & PENETRATION DETAILS
A3.1	~~SINGLE OCC. BATHROOM~~
A3.1.1	~~SINGLE OCC. BATHROOM AGE GROUP~~
A3.1.2	~~SINGLE OCC. BATHROOM COMBINED AGE GROUP~~
A3.2	RCP
A3.2.1	CEILING NOTES
A3.3	CEILING DETAILS (T-GRID)
~~A3.4~~	~~CEILING DETAILS (GYP BOARD)~~
A4.0.1	ROOF PLAN MONO SLOPE (STANDING SEAM)
~~A4.0.2~~	~~ROOF PLAN DUAL SLOPE (STANDING SEAM)~~
A4.1	ROOF DETAILS (STANDING SEAM)
A4.2.1	~~ROOF PLAN MONO SLOPE (EPDM)~~
~~A4.2.2~~	~~ROOF PLAN DUAL SLOPE (EPDM)~~
~~A4.3~~	~~ROOF DETAILS (EPDM)~~
~~A4.4.1~~	~~ROOF PLAN w/ PARAPET MONO SLOPE (EPDM)~~
~~A4.5~~	~~ARCHITECTURAL DETAILS (PARAPET)~~
A5.0	SIDEWALL ELEVATION
A5.1	ENDWALL ELEVATIONS
A5.2	INTERIOR ELEVATIONS
A6.0	SECTION - STANDING SEAM (MONO)
~~A6.0.1~~	~~SECTION - STANDING SEAM (DUAL)~~
~~A6.1~~	~~SECTION - EPDM (DUAL)~~
A6.2	SECTION
A6.3	~~SECTION - EPDM (MONO)~~
M0.1	MISCELLANEOUS NOTES & DETAILS
M0.2	MISCELLANEOUS NOTES & DETAILS
M2.9	24'x40' T24 CZ 14 (WALL AC)
M2.10	24'x40' T24 CZ 14 (WALL AC)
M2.11	24'x40' T24 CZ 15 (ROOF AC)
M2.12	24'x40' T24 CZ 15 (ROOF AC)
M2.13	24'x40' T24 CZ 16 (WALL AC)
M2.14	24'x40' T24 CZ 16 (WALL AC)
M3.3	ENVELOPE AND NOTES
M5.1	MECHANICAL CEILING PLAN 24x40
~~M5.2~~	~~MECHANICAL ROOF MOUNT 24x40~~
~~M6.1~~	~~MECHANICAL CEILING PLAN 36x40~~
~~M6.2~~	~~MECHANICAL ROOF MOUNT 36x40~~
~~M7.1~~	~~MECHANICAL CEILING PLAN 48x40 thru 120x40~~
~~M7.2~~	~~MECHANICAL ROOF MOUNT 48x40 thru 120x40~~
~~P1.0~~	~~TYPICAL PLUMBING DETAILS~~
Foundation	
F1.10	WOOD FOUNDATION NOTES SCHED FOR BLDG W/ 50+15
F1.11	WOOD FOUNDATION PLAN 24x40 BLDG W/ 50+15
~~F1.12~~	~~WOOD FOUNDATION 36x40 BLDG W/ 50+15~~
~~F1.13~~	~~WOOD FOUNDATION PLAN 48x40 BLDG W/ 50+15~~
~~F1.14~~	~~MODLINE "B" W/ EXTERIOR WALLS BACK-TO-BACK 100 PSF~~
~~F1.20~~	~~WOOD FOUNDATION NOTES SCHED FOR BLDG W/ 100PSF~~
~~F1.21~~	~~WOOD FOUNDATION PLAN 24x40 BLDG W/ 100 PSF~~
~~F1.22~~	~~WOOD FOUNDATION PLAN 36x40 BLDG W/ 100 PSF~~
~~F1.23~~	~~WOOD FOUNDATION PLAN 48x40 BLDG W/ 100 PSF~~
~~F1.24~~	~~MODLINE "B" W/ EXTERIOR WALLS BACK-TO-BACK 150 PSF~~
~~F1.30~~	~~WOOD FOUNDATION NOTES SCHED FOR BLDG W/ 150 PSF~~
~~F1.31~~	~~WOOD FOUNDATION PLAN 24X40 BLDG W/ 150 PSF~~
~~F1.32~~	~~WOOD FOUNDATION PLAN 36x40 BLDG W/ 150 PSF~~
~~F1.33~~	~~WOOD FOUNDATION PLAN 48x40 BLDG W/ 150 PSF~~
~~F1.34~~	~~MODLINE "B" W/ EXTERIOR WALL BACK TO BACK 150 PSF~~
F1.40	WOOD FOUNDATION DETAILS
~~F2.10~~	~~CONCRETE FOUNDATION PLAN~~
~~F2.20~~	~~CONCRETE FOUNDATION DETAILS~~
~~F2.30~~	~~CONCRETE FOUNDATION DETAILS~~
~~F2.40~~	~~CONCRETE FOUNDATION DETAILS~~
Structural	
S0.1	STRUCTURAL GEN NOTES
S1.0.4	WD SHTH'G FLR FRAMING PLAN CROSS-STRAP OPT. FRM'G PLAN
~~S1.1.1~~	~~CONC FLR FRM'G PLAN (50+15 PSF)~~
~~S1.1.3~~	~~CONC FLR FRM'G PLAN (150 PSF)~~
S1.2	STRUCTURAL DETAILS (FLOOR)
~~S3.0.1~~	~~MONO SLOPE ROOF FRM'G PLAN~~
~~S3.0.2~~	~~DUAL SLOPE ROOF FRM'G PLAN~~
S3.0.3	MONO SLOPE ROOF FRM'G PLAN CROSS-STRAP OPT.
~~S3.0.4~~	~~DUAL SLOPE ROOF FRM'G PLAN CROSS-STRAP OPT.~~
S3.1	STRUCTURAL DETAILS (ROOF)
~~S3.2~~	~~ROOF DETAILS (COFF/PARAPET)~~
S3.3	ROOF PERIMETER TRUSS
S4.1	WD WALL FRAMING ELEVATIONS
S4.2	WALL DETAILS (WOOD FRAMING)
S4.4	TYP FRAMING
S4.5	FRAMING SCHEDULES
S5.0	LONG. SECTION - (MONO)
~~S5.1~~	~~LONG SECTION - (DUAL)~~
~~S6.0~~	~~AWNING FRAMING~~

Sheet List	
Sheet Number	Sheet Name
SR0	MODULE PLAN AND NOTES
SR1	RAMP LANDING
SR2	LANDING FRAME
SR3	FOUNDATION PLAN
SR4	RAMP ELEVATION
SR5	RAMP DETAILS
SR6	RAMP DETAILS
SR7	STAIR CONN
Grand total: ~~67~~ 60	

(125) 24x40 SERIAL NUMBERS#:

~~C-23-2962 A/B C-23-2966 A/B C-23-2970 A/B C-23-2974 A/B C-23-2978 A/B C-23-2982 A/B~~
~~C-23-2963 A/B C-23-2967 A/B C-23-2971 A/B C-23-2975 A/B C-23-2979 A/B C-23-2983 A/B~~
~~C-23-2964 A/B C-23-2968 A/B C-23-2972 A/B C-23-2976 A/B C-23-2980 A/B~~
~~C-23-2965 A/B C-23-2969 A/B C-23-2973 A/B C-23-2977 A/B C-23-2981 A/B~~

~~C-23-2984 A/B C-23-2988 A/B C-23-2992 A/B C-23-2996 A/B C-23-3000 A/B C-23-3004 A/B C-23-3008 A/B~~
~~C-23-2985 A/B C-23-2989 A/B C-23-2993 A/B C-23-2997 A/B C-23-3001 A/B C-23-3005 A/B C-23-3009 A/B~~
~~C-23-2986 A/B C-23-2990 A/B C-23-2994 A/B C-23-2998 A/B C-23-3002 A/B C-23-3006 A/B~~
~~C-23-2987 A/B~~ C-23-2991 A/B ~~C-23-2995 A/B C-23-2999 A/B C-23-3003 A/B C-23-3007 A/B~~

~~C-23-3010 A/B C-23-3022 A/B C-23-3034 A/B C-23-3046 A/B C-23-3058 A/B C-23-3070 A/B C-23-3082 A/B~~
~~C-23-3011 A/B C-23-3023 A/B C-23-3035 A/B C-23-3047 A/B C-23-3059 A/B C-23-3071 A/B C-23-3083 A/B~~
~~C-23-3012 A/B C-23-3024 A/B C-23-3036 A/B C-23-3048 A/B C-23-3060 A/B C-23-3072 A/B C-23-3084 A/B~~
~~C-23-3013 A/B C-23-3025 A/B C-23-3037 A/B C-23-3049 A/B C-23-3061 A/B C-23-3073 A/B C-23-3085 A/B~~
~~C-23-3014 A/B C-23-3026 A/B C-23-3038 A/B C-23-3050 A/B C-23-3062 A/B C-23-3074 A/B C-23-3086 A/B~~
~~C-23-3015 A/B C-23-3027 A/B C-23-3039 A/B C-23-3051 A/B C-23-3063 A/B C-23-3075 A/B C-23-3087 A/B~~
~~C-23-3016 A/B C-23-3028 A/B C-23-3040 A/B C-23-3052 A/B C-23-3064 A/B C-23-3076 A/B~~
~~C-23-3017 A/B C-23-3029 A/B C-23-3041 A/B C-23-3053 A/B C-23-3065 A/B C-23-3077 A/B~~
~~C-23-3018 A/B C-23-3030 A/B C-23-3042 A/B C-23-3054 A/B C-23-3066 A/B C-23-3078 A/B~~
~~C-23-3019 A/B C-23-3031 A/B C-23-3043 A/B C-23-3055 A/B C-23-3067 A/B C-23-3079 A/B~~
~~C-23-3020 A/B C-23-3032 A/B C-23-3044 A/B C-23-3056 A/B C-23-3068 A/B C-23-3080 A/B~~
~~C-23-3021 A/B C-23-3033 A/B C-23-3045 A/B C-23-3057 A/B C-23-3069 A/B C-23-3081 A/B~~

SEISMIC DESIGN -SITE SPECIFIC PARAMETERS

Select One

- [X] Design based on Site Class $D_{default}$
  No geotechnical investigation required
  Ss = 0.542 Fa = 1.2
- [ ] Design based on site class determined per chapter 20 of ASCE 7-16
  Geotechnical investigation provided
  Site Class: ☐ C ☐ D ☐ E
  Ss = ____ Fa = ____ per ASCE 7-16 Suppl 3, Table 11.4-1
- [ ] Design based on site specific ground motion hazard analysis
  per chapter 21 of ASCE 7-16
  Short-period design spectral response parameter, S_{DS}, shall be as specified in geotechnical investigation
  CGS approval required
  Not eligible for OTC review
  Site Class: ☐ C ☐ D ☐ E

S_{DS} = 2/3 Fa.Ss = 0.542
Site Class C or D: 0.7 x S_{DS}* = 0.7 x0.542= 0.379 ≤ 1.307
Site Class E: S_{DS} = 0.379 ≤ 1.307
C_S = 0.373 used in design
Seismic Design Category: [X] D ☐ E
* Site specific S_{DS} value before applying reduction allowed by ASCE 7 section 12.8.1.3

Acceptance tests be completed on newly installed or replacement of lighting controls, mechanical systems, fenestration, and process equipment before project completion per the California Energy Code Section 10-103. Acceptance tests must be performed by a certified Acceptance Test Technician (ATT). The Acceptance Testing procedures must be repeated, and deficiencies corrected until the installation of the specified systems conform and pass the required acceptance criteria. Completed NRCA forms shall be submitted to the project inspector and the district.

A DSA CERTIFIED INSPECTOR EMPLOYED BY THE DISTRICT (OWNER), AND APPROVED BY THE DIVISION OF THE STATE ARCHITECT SHALL PROVIDE CONTINUOUS INSPECTION OF THE WORK. THE DUTIES OF THE INSPECTOR ARE DEFINED IN SECTION 4-333 AND 4-342, PART 1, TITLE 24, CCR. CLASS R.B.I.P. FOR IN-PLANT INSPECTIONS.

SITE SPECIFIC:
COMPLY WITH CFC CHAPTERS 5 & 7, CBC CHAPTERS 3,5,7,11B & 14

NOTE: " THIS PC IS NOT APPROVED FOR CHAPTER 7A WILDLAND URBAN AREAS". THIS REVIEW IS PART OF THE SITE SPECIFIC PROJECT. THE APPROVAL OF THE PC DOES NOT INCLUDE THE SITE.

@	AT	FIXT	FIXTURE	PAR	PARALLEL
AB	ANCHOR BOLT	FJT	FLUSH JOINT	PBD	PARTICLE BOARD
ABC	AGGREGATE BASE COURSE	FLR	FLOOR	PCC	PRECAST CONCRETE
ABV	ABOVE	FLUR	FLUORESCENT	PCF	POUNDS PER CUBIC FOOT
AD	AREA DRAIN	FLEX	FLEXIBLE	PCS	PIECES
ADD	ADDENDUM	FND	FOUNDATION	PERF	PERFORATE (D)
ADH	ADHESIVE	FO'	FACE OF	PERI	PERIMETER
ADJ	ADJACENT, ADJUSTABLE	FP	FIREPROOF (ED)	PFB	PREFABRICATE (D)
ADOH	ALTERNATE DIRECTION OF HOOK	FPG	FIREPROOFING	PFS	POUNDS PER SQUARE FOOT
AFF	ABOVE FINISHED FLOOR	FR	FRAME (D)(ING)	PL	PLATE
AGG	AGGREGATE	FRC	FIRE RESISTANT COATING	PLBG	PLUMBING
ALT	ALTERNATE	FRGD	FORGED	PLF	POUNDS PER LINEAR FOOT
ALUM	ALUMINUM	FRMG	FRAMING	P.L.	PARALLAM
ANCH	ANCHOR (AGE)	FT	FOOT, FEET	PLWD	PLYWOOD
ANOD	ANODIZED	FTG	FOOTING	PMT	PAVEMENT
APPRX	APPROXIMATE	FURR	FURRED, FURRING	PNL	PANEL
ARCH	ARCHITECT (URAL)	FV	FIELD VERIFY	POSTEN	POST TENSION (D)
ASPH	ASPHALT			PRETEN	PRETENSIONED
AUTO	AUTOMATIC	GA	GAUGE	POLY	POLYETHYLENE
		GALV	GALVANIZED	PR	PAIR
B	BOTTOM	GC	GENERAL CONTRACTOR	PRJ	PROJECT
BB	BOND BEAM	GI	GALVANIZED IRON	PSC	PRESTRESSED CONCRETE
BC	BOTTOM CHORD	GKT	GASKET	PSF	POUNDS PER SQUARE FOOT
BD	BOARD	GL	GLASS, GLAZING	PSI	POUNDS PER SQUARE INCH
BEG	BEGIN (ING)	GLM	GLULAM	PT	POINT
BEL	BELOW	GP	GALVANIZED PIPE	P.T.	PRESSURE TREATED
BIT	BITUMINOUS	GPM	GALLONS PER MINUTE	PTC	POST-TENSIONED CONCRETE
BJT	BED JOINT	GPPL	GYPSUM PLASTER	PTD	PAINTED
BLDG	BUILDING	GRVL	GRAVEL, GRANULAR	PVC	POLYVINYL CHLORIDE
BLK	BLOCK (G, ING)	GRD	GRADE, GRADING	PVMT	PAVEMENT
BLW	BELOW	GRN	GRANITE		
BM	BEAM	GSS	GALVANIZED SHEET STEEL	QTY	QUANTITY
BMK	BENCH MARK	GT	GROUT	R	RADIUS, RISER
BO'	BOTTOM OF	GVL	GRAVEL	RAD	RADIUS
BPL	BEARING PLATE	GWB	GYPSUM WALLBOARD	RD	ROOF DRAIN
BRD	BOARD	GYP	GYPSUM	RECT	RETANGULAR
BRDG	BRIDGING			REF	REFERENCE, REFER TO
BRG	BEARING	H	HIGH	REINF	REFORCE (D) (ING)
BRK	BRICK	HBD	HARDBOARD	REM	REMOVE
BRZ	BRONZE	HC	HOLLOW CORE	REQD	REQUIRED
BS	BOTH SIDES	HD	HEAVY DUTY	REQS	REQUIREMENTS
BTWN	BETWEEN	HDNR	HARDENER	RETG	RETAINING
BVL	BEVELED	HDR	HEADER	REV	REVISION, REVISED
BW	BOTH WAYS	HDWR	HARDWARE	RFG	ROOFING
		HDWD	HARDWOOD	RFH	ROOF HATCH
C	CHANNEL, COMPRESSION	HES	HIGH EARLY STRENGTH CEMENT	RFL	REFLECT (ED)(IVE)(OR)
CAD	CADMIUM	HH	HANDHOLE	RM	ROOM
CAM	CAMBER	HJT	HEADJOINT	RO	ROUGH OPENING
C/C	CENTER TO CENTER	HK	HOOK	RT	FIRE RETARDANT TREATED
CEM	CEMENT	HM	HOLLOW METAL	RT	RUBBER TILE
CF	CUBIC FOOT	HORIZ	HORIZONTAL	RTG	RATING
CHAM	CHAMFER	HPT	HIGH POINT	RVS	REVERSE SIDE
CI	CAST IRON	HR	HOUR	RVT	RIVET
CIP	CAST-IN-PLACE	HSA	HEADED STUD ANCHOR		
CIR	CIRCLE	HSB	HIGH STRENGHT BOLT	S	SOUTH
CIRC	CIRCUMFERENCE	HT	HEIGHT	SC	SOLID CORE
CJ	CONSTRUCTION JOINT	HWD	HARDWOOD	SCHED	SCHEDULE
CJT	CONTROL JOINT			SDL	SUPERIMPOSED DEAD LOAD
CLG	CEILING	ID	INSIDE DIAMETER	SDS	SELF DRILL SCREW
CLK	CAULK, (G, ING)	IN	INCHE (ES)	SE	STRUCTURAL ENGINEER
CLKG	CAULKING	INCL	INCLUDE (D), INCLUDING	SDST	SELF-DRILL, SELF-TAPG SCREW
CLR	CLEAR	INSUL	INSULATE, INSULATION	SECT	SECTION
CLS	CLOSURE	INT	INTERIOR	SF	SQUARE FOOT, SQUARE FEET
CM	CENTIMETER	INTM	INTERMEDIATE	SHO	SHORE, SHORING
CMP	CORRUGATED METAL PIPE	INV	INVERT	SHT	SHEET
CMU	CONCRETE MASONRY UNIT			SHTH	SHEATHING
CNTR	CENTER	JST	JOIST	SI	SQUARE INCH
COL	COLUMN	JT	JOINT	SIM	SIMILAR
COG	CENTER OF GRAVITY			SL	SLOPE
COMB	COMBINATION	K	KIP (S)	SLNT	SEALANT
COMP	COMPRESS (ED)(ION)(IBLE)	KO	KNOCKOUT	SMS	SHEET METAL SCREW
COMPOO	COMPOSITE	KSI	KIPS PER SQUARE INCH	SOG	SLAB ON GRADE
CONN	CONNECT (ION)			SPA	SPACE, (ING)
CONC	CONCRETE	L	LONG, LENGTH	SPC	SPACER
CONST	CONSTRUCT (ION) (ED)	LAM	LAMINATE (D)	SPEC	SPECIFICATION (S)
CONT	CONTINUE, CONTINUOUS	LB	POUND, LAG BOLT	SQ	SQUARE
CONTR	CONTRACTOR	LBL	LABEL	SSTL	STAINLESS STEEL
COR	CORRUGATED	LC	LIGHT CONTROL	STG	STAGGERED
CP	COMPLETE PENETRATION	LD	DEVELOPMENT LENGHT	STD	STANDARD
CPG	COPING	LF	LINEAR FOOT	STL	STEEL
CPR	COPPER	LH	LEFT HAND	STOR	STORAGE
		LL	LIVE LOAD	STRUCT	STRUCTURE
CRS	COURSE (S)	LLH	LONG LEG HORIZONTAL	STR	STRUCTURAL
CS	COUNTERSINK	LLV	LONG LEG VERTICAL	SYM	SYMETRICAL, SYMETRY
CTSK	COUNTERSUNK SCREW	LPT	LOW POINT	SYS	SYSTEM
CU	CUBIC	LT	LIGHT		
CX	CONNECTION	LTL	LINTEL	T	TOP, TORSION, TREAD
CY	CUBIC YARD	LVL	LEVEL (ING)	T&B	TOP AND BOTTOM
		LW	LIGHT WEIGHT	T&G	TONGUE AND GROOVE
D	DEEP, DEPTH	LWC	LIGHT WEIGHT CONCRETE	TC	TOP CHORD
DBL	DOUBLE	LWF	LIGHT WEIGHT FILL	TEN	TESION, TENSILE
DEF	DEFLECTION			TEMP	TEMPORARY, TEMPERATURE
DEG	DEGREE	M	METER (S) MOMENT	THD	THREAD (ED)
DEM0	DEMOLISH, DEMOLITION	MATL	MATERIAL	THK	THICK (NESS)
DEP	DEPRESSED	MAS	MASONRY	TMPRD	TEMPERED
DEPT	DEPARTMENT	MAX	MAXIMUM	TO*	TOP OF
DET	DETAIL	MB	MACHINE BOLT	TL	TOTAL LOAD
DIAG	DIAGONAL	MBR	MEMBER	TR	TREAD
DIA	DIAMETER	MCONN	MOMENT CONNECTION	TS	TUBE STEEL
DIM	DIMENSION (ED)	MECH	MECHANICAL	TYP	TYPICAL
DIV	DIVISION	MED	MEDIUM		
DL	DEAD LOAD	MET	METAL	UC	UNDERCUT
DN	DOWN	MEMB	MEMBER	UGD	UNDERGROUND
DO	DITTO	MEP	MECHANICAL, ELECTRICAL, & PLUMBING	UL	UNDERWRITERS LABORATORY
DP	DAMPROOFING			UND	UNDER
DWL	DOWEL (ED)	MFD	METAL FLOOR DECKING	UNF	UNFINISHED
DWG	DRAWING, (S)	MFR	MANUFACTURE (R) (ED)	UNO	UNLESS NOTED OTHERWISE
		MID	MID, MIDDLE		
E	EAST,	MIN	MINIMUM, MINUTE	V	SHEAR FORCE, VELOCITY
	MODULUS OF ELASTICITY	MISC	MISCELLANEOUS	VB	VAPOR BARRIER
EA	EACH	MM	MILLIMETER (S)	VER	VERIFY
EB	EXPANSION BOLT	MMB	MEMBRANE	VERT	VERTICAL
EF	EACH FACE	MO	MASONRY OPENING	VG	VERTICAL GRAIN
EJT	EXPANSION JOINT	MOD	MODEL	VIF	VERIFY IN FIELD
EL	ELEVATION	MODU	MODULAR	VJ	V-JOINTED
ELEC	ELECTRIC (AL)	MOV	MOVABLE	VNR	VENEER
ENCL	ENCLOSURE, ENCLOSED	MTL	MATERIAL	V.T.R.	VENT THROUGH ROOF
ENG	ENGINEER	ML	MODULE (MOD)LINE		
EQ	EQUAL, EQUALIBRIUM	N	NORTH, NEW	W	WEST, WIDTH, WIDE,
EQUIP	EQUIPMENT	NAT	NATURAL		WIDE FLANGE
ESTM	ESTIMATE (ED)	NL	NAILABLE	W/	WITH
EV	EXPANSION BOLT	NMT	NONMETALLIC	W/O	WITHOUT
EW	EACH WAY	NO	NUMBER	WD	WOOD
EXCA	EXCAVATE (D) (ION)	NOM	NOMINAL	WI	WROUGHT IRON
(E), EXIST	EXISTING	NTS	NOT TO SCALE	WM	WIRE MESH
EXMP	EXPANDED METAL PLATE			WP	WATERPROFFING
EXP	EXPOSED	OA	OVERALL	WPR	WATER REPELLENT
EXPN	EXPANSION	o.c.	ON CENTER	WPT	WORKING POINT
EXS	EXTRA STRONG	OD	OUTSIDE DIAMETER	WS	WATER STOP
EXT	EXTERIOR, EXTERNAL	OH	OVERHEAD	WT	WEIGHT
		OHMS	OVALHEAD MACHINE SCREW	WTW	WALL TO WALL (W/W)
FAS	FASTENER	OHWS	OVALHEAD WOOD SCREW	WWF	WELDED WIRE FABRIC
FBO	FURNISHED BY OTHERS	OJ	OPEN-WEB JOINT (S)	WWM	WELDED WIRE MESH
FD	FLOOR DRAIN	OPH	OPPOSITE HAND		
FHMS	FLATHEAD MACHINE SCREW	OPNG	OPENING		
FHS	FIRE HOSE STATION	OPP	OPPOSITE		
FHWS	FLATHEAD WOOD SCREW	OFOI	OWNER FURNISHED OWNER INSTALLED		
FIN	FINISH (ED)				

CONSTRUCTION OF CLASSROOM BUILDING (RELOCATABLE)

SCOPE OF WORK

BUILDING DESIGN

NUMBER OF STORIES: 1
OCCUPANCY: "E" and [X] (Design with Floor Live Load **150 psf** only must be used for occupancy B)
CONSTRUCTION TYPE: VB
FLOOR LIVE LOAD: [X] 50+15 PSF PARTITION
☐ 100 PSF ☐ 150 PSF
FLOOR DEAD LOAD: [X] WOOD FLOOR - 11 PSF
☐ CONC. FLOOR - 33 PSF

ROOF LIVE LOAD: 20 PSF
ROOF SNOW LOAD: 20 PSF
ROOF DEAD LOAD: 18.5 PSF (INCLUDES SPRINKLERS & 3PSF SOLAR PANEL)
RAMPLIVE LOAD: 100PSF
FLOOD DESIGN: This PC has not been designed to accommodate flood loads. If located in a zone other than X, a letter stamped and signed from a soils engineer is needed to validate the allowable soil values assumed in this PC are still applicable. (OWNER SUPPLIED)

FLOOD DESIGN DATA: PROJECT NOT LOCATED IN A FLOOD ZONE

BUILDING AREA	NO OVERHANG	WITH OVERHANG (5' @ EA. END)
ALLOWABLE AREA	☐ 24x40 960 sf	[X] 24x40 1200 sf
=9,500 sf	☐ 36x40 1440 sf	☐ 36x40 1800 sf
ACTUAL AREA	☐ 48x40 1920 sf	☐ 48x40 2400 sf
=4,800 SF	☐ 60x40 2400 sf	☐ 60x40 3000 sf
	☐ 72x40 2880 sf	☐ 72x40 3600 sf
	☐ 84x40 3360 sf	☐ 84x40 4200 sf*
	☐ 96x40 3840 sf	☐ 96x40 4800 sf*
	☐ 108x40 4320 sf*	☐ 108x40 5400 sf*
	☐ 120x40 4800 sf*	☐ 120x40 6000 sf*

*Geo-hazard site specific report must be provided and approved by CGS for building area more than 4000 sf

ALLOWABLE SOIL PRESSURE: [X] WOOD FTG -1000PSF ☐ CONCRETE FTG 1500PSF

FOUNDATION: [X] WOOD (conditional) ☐ CONCRETE ABOVE GRADE
☐ CONCRETE BELOW GRADE <2160sf (conditional)
☐ CONCRETE BELOW GRADE (AMM)
SEE GENERAL NOTE 14 BELOW
PC IS DESIGNED BASED ON A PINNED CONNECTION TO THE FOUNDATION.

CEC CLIMATE ZONE: 1-16

☐ CZ 1-2 RIGID R-10 / 2" [X] CZ 3-15 RIGID R-5 / 1" ☐ CZ 16 RIGID R-15 / 4"

WIND DESIGN

ULTIMATE DESIGN SPEED: Vult = 110 mph, 3 sec GUST, Kzt = 1.0
RISK CATEGORY: II
EXPOSURE: C

EARTHQUAKE DESIGN

RISK CATEGORY: II
SEISMIC IMPORTANCE FACTOR: I = 1
MAPPED SPECTRAL RESPONSE: [X] Ss = 2.33, ☐Ss =2.8**
S1 = 1.99
DRIFT LIMIT: 0.02 x H_{story} x 12 = 2.82 PER TABLE 12.12-1
SITE CLASS: D-DEFAULT*
SEISMIC DESIGN CATEGORY: E
Note: For SDC (E) site specific motion analysis is not required if not in a seismic hazard zone and/or meets other exemptions in DSA IR A-4
SHORT/LONG PERIOD SITE COEFFICIENT: [X] Fa = 1.2, ☐Fa=1.0**, Fv = 1.7
DEISIGN SPECTRAL RESPONSE: Sds = 1.86
Sd1 = 2.26
SEISMIC RESPONSE COEFFICIENT, Cs: 0.373 (using reduced Sds as allowed by ASCE 12.8.1.3)

BASIC SEISMIC FORCE-RESISTING SYS: OMF, R = 3.5
ANALYSIS PROCEDURE: EQUIVALENT LATERAL FORCE
BASE SHEAR PER 24X40 MODULE: WOOD FLOOR, LL ≤ 100, BASE SHEAR= 26.44 kip
~~WOOD FLOOR, LL = 150, BASE SHEAR= 39.87 kip~~
CONC. FLOOR, LL ≤ 100, BASE SHEAR= 34.68 kip
~~CONC. FLOOR, LL = 150, BASE SHEAR= 43.1 kip~~

NOTE: FOR SDC (E) SITE SPECIFIC MOTION ANALYSIS IS NOT REQUIRED IF NOT IN A SEISMIC HAZARD ZONE AND/OR MEETS OTHER EXEMPTION IN DSA IR A-4
*Site Specific Ground Motion Analysis is not required because the value of SM1 is increased by 50% in accordance with exception of item #1 of section 11.4.8 per supplement 3 of ASCE 7-16
**Geo-Hazard report with verification of site Class D must be provided and approved by CGS for site specific ARES with Ss>2.33

PARTIAL LIST OF APPLICABLE CODES AS OF January 1, 2023

~~2022 California Administrative Code (CAC); Part 1, Title 24 CCR~~
2022 California Building Code (CBC), Part 2, Title 24 CCR
2022 California Electrical Code (CEC), Part 3, Title 24 CCR
2022 California Mechanical Code (CMC), Part 4, Title 24 CCR
2022 California Plumbing Code (CPC), Part 5, Title 24 CCR
2022 California Energy Code, Part 6, Title 24 CCR
2022 California Fire Code (CFC), Part 9, Title 24 CCR
2022 California Existing Building Code (CEBC), Part 10, Title 24 CCR
2022 California Green Building Standards Code (CALGreen), Part 11, Title 24 CCR
2022 California Referenced Standards Code, Part 12, Title 24 CCR
Title 19 CCR, Public Safety, State Fire Marshal Regulations

APPLICABLE STANDARDS

For a list of applicable standards, including California amendments to the NFPA Standards, refer to CBC Chapter 35 and CFC Chapter 80.

REQUIRED PV SYSTEM SIZE (kW)

CLIMATE ZONE	BUILDING SIZE								
	24'x40'	36'x40'	48'x40'	60'x40'	72'x40'	84'x40'	96'x40'	108'x40'	120'x40'
	APPROXIMATE CONDITIONED FLOOR AREA								
	960	1440	1920	2400	2880	3360	3840	4320	4800
1	NONE	NONE	NONE	NONE	NONE	4.3	4.9	5.5	6.1
2	NONE	NONE	NONE	NONE	4.7	5.5	6.3	7.0	7.8
3	NONE	NONE	NONE	NONE	NONE	4.3	4.9	5.5	6.1
4	NONE	NONE	NONE	4.7	5.5	6.3	7.0	7.8	
5	NONE	NONE	NONE	NONE	4.3	4.9	5.5	6.1	
6	NONE	NONE	NONE	4.7	5.5	6.3	7.0	7.8	
7	NONE	NONE	NONE	4.7	5.5	6.3	7.0	7.8	
8	NONE	NONE	NONE	4.7	5.5	6.3	7.0	7.8	
9	NONE	NONE	4.7	5.5	6.3	7.0	7.8		
10	NONE	NONE	NONE	4.7	5.5	6.3	7.0	7.8	
11	NONE	NONE	NONE	4.7	5.5	6.3	7.0	7.8	
12	NONE	NONE	NONE	4.7	5.5	6.3	7.0	7.8	
13	NONE	NONE	NONE	4.7	5.5	6.3	7.0	7.8	
14	NONE	NONE	NONE	NONE	4.7	5.5	6.3	7.0	7.8
15	NONE	NONE	4.7	5.9	7.1	8.3	9.4	10.6	11.8

ARCHITECTURAL

6 General Architectural Sheets 1/4" = 1'-0"	GENERAL ARCHITECTURAL SHEETS	Sheet
COVER SHEET		A0.0
PROJECT OPTIONS SCHEDULE		A0.0.1
TYPICAL KEY PLAN AND SCHEDULE, GEN NOTES		A0.1
SIGNAGE AND SYMBOLS		A0.2
DSA-103 T&I CONCRETE FLOORS		A0.3
DSA-103 T&I PLYWOOD FLOORS		A0.4
CALGREEN SPEC'S		A0.5
CALGREEN SHEET		A0.6
CALGREEN SHEET		A0.7
CALGREEN SHEET		A0.8

5 Floor Plan Details 1/4" = 1'-0"	ARCHITECTURAL FLOOR PLANS	Sheet
X Floor Plans	X Floor Plan - 24'x40'	A1.0
	□ Floor Plan - 36'x40'	A1.1
	□ Floor Plan - 48'x40'	A1.2

1 Arch Floor Framing Details 1/4" = 1'-0"	ARCHITECTURAL FLOOR FRAMING DETAILS						Sheet
X Wood Floor	1	2	3	4	5	6	A2.9
□ Concrete Floor	7	8	9	10	11	12	A2.9

2 Wall Schedule 1/4" = 1'-0"	ARCHITECTURAL WALL DETAILS													
Wood Studs	Detail													Sheet
	Door		ML			Window	Corner	HVAC	Top PLT	6" SEP	1-HR OPT 1	1-HR OPT 2	EXT HDR	INT HDR	
X Sheating	8	9	2	3	4 5	11	1	16	17	5	x	x	10A	10B	A2.1(A)
□ Sheating	8	9	2	3	4 5	11	1	16	17	5	x	x	10A	10B	A2.1(B)
□ Plaster	8	9	3	4	5	11	1	16	17	5	x	x	10A	10B	A2.2
□ 1-HR Sheating	8	9	2	3	4 5	11	1	16	17	5	-	-	10A	-	A2.5(A)
□ 1-HR Sheating	8	9	2	3	4 5	11	1	16	17	5	-	-	10A	-	A2.5(B)
□ 1-HR Plaster	8	9	2	3	4 5	11	1	16	17	4	-	-	10A	-	A2.6
□ Additional Fire Rating Details and Notes															A3.0
□ Single OCC. Bathroom															A3.1
□ Single OCC. Bathroom															A3.1.1

4 Ceiling Plans 1/4" = 1'-0"	ARCHITECTURAL CEILING PLANS		Sheet
Reflected Ceiling Plans:	X 24' x 40'	X 8 (2'x4') Recessed Light Fixture	A3.2
		□ 12 (1'x8') Pendant Light w/ 4 (1'x16') Recessed Light	A3.2
	□ 36' x 40'	□ 12 (2'x4') Recessed Light Fixture	A3.2
		□ 16 (1'x8') Pendant Light w/ 4 (1'x16') Recessed Light	A3.2
	□ 48' x 40'	□ 16 (2'x4') Recessed Light Fixture	A3.2
		□ 18 (1'x8') Pendant Light w/ 4 (1'x16') Recessed Light	A3.2
Celing Notes			A3.2.1

3 Ceiling Details 1/4" = 1'-0"	ARCHITECTURAL CEILING DETAILS				
Celing Framing	Detail				Sheet
	Wall	Joists	Access	BLK'G	
X T-GRID	SEE PLAN	SEE PLAN	SEE PLAN	SEE PLAN	A3.3
□ Wood	1	2	5	Typ	A3.4

7 Roof Plans 1/4" = 1'-0"	ARCHITECTURAL ROOF PLANS	Sheet
X Mono		
	□ EPDM	A4.2.1
	X Standing Seam	A4.0.1
	□ Parapet	A4.4.1
□ Dual		
	□ EPDM	A4.2.2
	□ Standing Seam	A4.0.2

22 Roof Details 1/4" = 1'-0"	ARCHITECTURAL ROOF DETAILS	Sheet
X Mono		
	□ EPDM	A4.3
	X Standing Seam	A4.1
	□ Parapet	A4.5
□ Dual		
	□ EPDM	A4.3
	□ Standing Seam	A4.1

8 Arch Building Section 1/4" = 1'-0"	ARCHITECTURAL BUILDING SECTION	Sheet
X Mono		
	□ EPDM	A6.3
	X Standing Seam	A6.0
□ Dual		
	□ EPDM	A6.1
	□ Standing Seam	A6.0.1
Section		A6.2

ARCHITECTURAL

13 Exterior Elevations 1/4" = 1'-0"	ARCHITECTURAL EXTERIOR ELEVATIONS	Detail		Sheet	Detail		Sheet
		Left	Right		Front	Rear	
Exterior Elevations:	X 24'x40'						
	X Mono Slope	1	2	A5.0	1	2	A5.1
	□ Parapet Roof - Mono Slope	3	4	A5.0	3	4	A5.1
	□ Dual Slope	5	6	A5.0	1	2	A5.1
	□ 36'x40'						
	□ Mono Slope	1	2	A5.0	5	6	A5.1
	□ Parapet Roof - Mono Slope	3	4	A5.0	7	8	A5.1
	□ Dual Slope	5	6	A5.0	5	6	A5.1
	□ 48'x40' - 120'X40'						
	□ Mono Slope	1	2	A5.0	9	10	A5.1
	□ Parapet Roof - Mono Slope	3	4	A5.0	11	12	A5.1
	□ Dual Slope	5	6	A5.0	9	10	A5.1

14 Interior Elevations 1/4" = 1'-0"	ARCHITECTURAL INTERIOR ELEVATIONS	Detail				Sheet
Interior Elevations:		Left	Right	Front	Rear	
	X 24'x40'	1	2	3	4	A5.2
	□ 36'x40'	1	2	5	6	A5.2
	□ 48'x40' - 120'X40'	1	2	8	7	A5.2

23 ADDITIONAL OPTIONS DETAILS 1/4" = 1'-0"	ADDITIONAL OPTIONS DETAILS	Sheet
ADDITIONAL OPTIONS DETAILS		A7.0
ADDITIONAL OPTIONS DETAILS		A7.1
ADDITIONAL OPTIONS DETAILS		A7.2

MEP

9 Plumbing 1/4" = 1'-0"	PLUMBING	Sheet
□ Plumbing Details and Schedules		P1.0

10 Mechanical 1/4" = 1'-0"	MECHANICAL		Sheet	
MISCELLANEOUS NOTES & DETAILS			M0.1	
			Ceiling Plan	Roof Plan
Mechanical Plans:	X 24' x 40'	X Wall Mount	M5.1	M5.2
		□ Roof Mount	M5.1	M5.2
	□ 36' x 40'	□ Wall Mount	M6.1	M6.2
		□ Roof Mount	M6.1	M6.2
	□ 48' x 40'	□ Wall Mount	M7.1	M7.2
		□ Roof Mount	M7.1	M7.2
	□ 60' x 40'	□ Wall Mount	A0.1	
		□ Roof Mount		
	□ 72' x 40'	□ Wall Mount		
		□ Roof Mount		
	□ 84' x 40'	□ Wall Mount		
		□ Roof Mount		
	□ 96' x 40'	□ Wall Mount		
		□ Roof Mount		
	□ 108' x 40'	□ Wall Mount		
		□ Roof Mount		
	□ 120' x 40'	□ Wall Mount		
		□ Roof Mount		

11 Electrical 1/4" = 1'-0"	ELECTRICAL	Sheet	
Reflected Ceiling Plans:	X 24' x 40'		
	X 8 (2'x4') Recessed Light Fixture		
	□ 12 (1'x8') Pendant Light w/ 4 (1'x16') Recessed Light	E1.0	E1.1
	□ 36' x 40'		
	□ 12 (2'x4') Recessed Light Fixture		
	□ 18 (1'x8') Pendant Light w/ 4 (1'x16') Recessed Light	E1.2	E1.3
	□ 48' x 40'		
	□ 16 (2'x4') Recessed Light Fixture		
	□ 24 (1'x8') Pendant Light w/ 4 (1'x16') Recessed Light	E1.4	E1.5
	□ 60' x 40'		
	□ 20 (2'x4') Recessed Light Fixture		
	□ 30 (1'x8') Pendant Light w/ 4 (1'x16') Recessed Light		
	□ 72' x 40'		
	□ 24 (2'x4') Recessed Light Fixture		
	□ 36 (1'x8') Pendant Light w/ 4 (1'x16') Recessed Light		
	□ 84' x 40'		
	□ 28 (2'x4') Recessed Light Fixture		
	□ 42 (1'x8') Pendant Light w/ 4 (1'x16') Recessed Light		
	□ 96' x 40'		
	□ 32 (2'x4') Recessed Light Fixture		
	□ 48 (1'x8') Pendant Light w/ 4 (1'x16') Recessed Light		
	□ 108' x 40'		
	□ 36 (2'x4') Recessed Light Fixture		
	□ 54 (1'x8') Pendant Light w/ 4 (1'x16') Recessed Light		
	□ 120' x 40'		
	□ 40 (2'x4') Recessed Light Fixture		
	□ 60 (1'x8') Pendant Light w/ 4 (1'x16') Recessed Light		

STRUCTURAL

15 Foundations Plans 1/4" = 1'-0"	FOUNDATION	Sheet
X Wood Foundation Plan:	Wood Foundation NOTES SCHED FOR BLDG W/ 50+15	F1.10
	X 24'x40' (50+15 PSF)	F1.11
	□ 24'x40' (100 PSF)	F1.21
	□ 24'x40' (150 PSF)	F1.31
	□ 36'x40' (50+15 PSF)	F1.12
	□ 36'x40' (100 PSF)	F1.22
	□ 36'x40' (150 PSF)	F1.32
	□ 48'x40' (50+15 PSF)	F1.13
	□ 48'x40' (100 PSF)	F1.23
	□ 48'x40' (150 PSF)	F1.33
	Wood Foundation Details	F1.40
□ Concrete Foundation Plan		F2.10
□ Concrete Above Grade Foundation Details		F2.20
□ Concrete Below Grade Foundation Details		F2.22
		F2.23

16 General Structural Sheets 1/4" = 1'-0"	GENERAL STRUCTURAL SHEETS	Sheet
STRUCTURAL GEN NOTES		S0.1

17 Floor Framing Plans 1/4" = 1'-0"	STRUCTURAL FLOOR FRAMING PLANS		Sheet
X Wood Sheating Floor:	X (50+15 PSF)	S1.04	~~S1.01~~
	□ (100 PSF)		S1.02
	□ (150 PSF)		S1.03
□ Concrete Framing Floor:			
	□ (50+15 PSF)		S1.1.1
	□ (100 PSF)		S1.1.2
	□ (150 PSF)		S1.1.3

19 Floor Framing Details 1/4" = 1'-0"	STRUCTURAL FLOOR FRAMING DETAILS	Sheet
X Wood Framing		S1.2
□ Concrete Framing		S1.2

18 Roof Framing Plans 1/4" = 1'-0"	STRUCTURAL ROOF FRAMING PLANS		Sheet
X Mono Slope Roof Framing		S3.0.3	~~S3.0.1~~
□ Dual Slope Roof Framing			S3.0.2

STRUCTURAL DETAILS ROOF	Sheet
STRUCTURAL DETAILS	S3.1
ROOF DETAILS(SOFFIT/ PARRAPET)	S3.2
ROOF PERIMETER TRUSS	S3.3

20 Wall Framing Details 1/4" = 1'-0"	STRUCTURAL WALL FRAMING DETAILS	
X Wood:		Sheet
	X Framing Elevation	S4.1
	X Wall Details	S4.2
X Typ Framing:		S4.4
X Framing Schedule:		S4.5

21 Building Section 1/4" = 1'-0"	STRUCTURAL BUILDING SECTION	Sheet
X Mono		S5.0
□ Dual		S5.1

PROJECT SPECIFIC STATE AGENCY APPROVAL

IDENTIFICATION STAMP
DIV. OF THE STATE ARCHITECT
APP: 02-123433 INC:
REVIEWED FOR
SS ☑ FLS ☑ ACS ☑
DATE: 01/20/2026

R&S TAVARES ASSOCIATES
DESIGN ♦ CONSULTING ♦ PROJECT MGT
11590 W Bernardo Court, Suite 100
San Diego, CA 92127
www.rstavares.com

PROFESSIONAL STAMP

REGISTERED PROFESSIONAL ENGINEER
MANNY D. FRANCISCO
S3380
Exp. 03/31/24
STRUCTURAL
STATE OF CALIFORNIA
RST#22088
02/16/24

THE PLANS, IDEAS & DESIGNS SHOWN ON THESE DRAWINGS ARE THE PROPERTY OF R&S TAVARES ASSOCIATES, INC. DEVISED SOLELY FOR THIS CONTRACT. THESE PLANS SHALL NOT BE USED, IN WHOLE OR IN PART, FOR ANY PURPOSE FOR WHICH THEY WERE NOT INTENDED WITHOUT THE EXPRESS WRITTEN CONSENT OF R&S TAVARES ASSOCIATES, INC. ©

CLIENT

Class Leasing
1651Juanita Street, San Jacinto, CA 92583
Voice (951) 943-1908 Fax (951)943-5768

ORIGINAL PC STATE AGENCY APPROVAL

APPROVED
DIV. OF THE STATE ARCHITECT
APP: 04-123059 PC
REVIEWED FOR
SS ☑ FLS ☑ ACS ☑ CG ☑
DATE: 02/20/2024

Revision Schedule

#	Description	Date

PRE-CHECK (PC) DOCUMENT

CODE: 2019 CBC

A separate project application for construction is required

PROJECT TITLE
PC 2022 CBC: 24' x 40' EXPANDABLE TO 120' x 40'

SHEET TITLE
PROJECT OPTIONS SCHEDULE

PROJECT NUMBER
22088

DRAWN BY
rMc/SC

CHECKED BY
RH/RT

DATE
06/15/2021

SHEET NO.
A0.0.1

SHEET OF

9/7/2023 11:29:29 AM C:\Users\User\Documents\22088- Aries, 24x40 PC - MainFile - Low Seismic_detached (2022)_CESAR24D63.rvt

Door Schedule

Mark	Type	Width	Height	Door Material	Frame Type	Wall Thickness	Hardware
~~1~~	~~D1~~	~~3' - 0"~~	~~7' - 0"~~	~~18GA Hollow Metal~~	~~Knock Down~~	~~5 1/4"~~	~~HW1~~
2	D	3' - 0"	7' - 0"	18GA Hollow Metal	Knock Down	5 1/4"	HW2
~~3~~	~~D~~	~~3' - 0"~~	~~7' - 0"~~	~~Solid Core Wood Legacy~~	~~Knock Down~~	~~5 1/2"~~	~~HW3~~

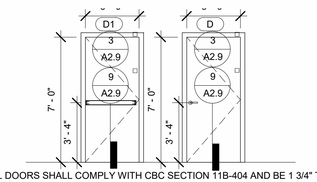

1. ALL DOORS SHALL COMPLY WITH CBC SECTION 11B-404 AND BE 1 3/4" THK (UNO)

2. CENTER ALL DOOR LEVERS FOR ACCESS AND LOCKING @ 40" ABOVE FINISH FLOOR. ALL HARDWARE SHALL OPEN FROM THE INTERIOR AND NOT REQUIRE ANY SPECIFIC KNOWLEDGE OF THE HARDWARE OR REQUIRE ANY SPECIAL EFFORT FOR EGRESS. THE LEVER OF LEVER-ACTUATED LEVERS OR LOCKS SHALL BE CURVED WITH A RETURN TO WITHIN 1/2" OF THE FACE OF THE DOOR TO PREVENT CATCHING ON THE CLOTHING (etc.) OF PERSONS DURING EGRESS. THE LEVER OF LEVER-ACTUATED LEVERS OR LOCKS SHALL EXTEND AT A MINIMUM OF ONE-HALF THE DOOR WIDTH.

3. PER CBC 1010.1.10 FOR ANY ROOM CONFIGURATION WHICH PROVIDES AN OCCUPANT LOAD OF 50 OR GREATER SHALL NOT BE PROVIDED WITH A LATCH OR LOCK UNLESS IT IS PANIC HARDWARE OR FIRE EXIT HARDWARE AND COMPLY WITH ALL REQUIREMENTS OF SECTION 11B-309 OF THE CBC. ALL HARDWARE SHALL COMPLY WITH HARDWARE SCHEDULE THIS SHEET.

4. PER CBC 11B-309.4 THE FORCE REQUIRED TO ACTIVATE OPERABLE PARTS SHALL BE 5 POUNDS (22.2 N) MAX.

5. PER CBC 11B-404.2.8.2 DOOR SPRING HINGES SHALL BE ADJUSTED SO THAT FROM THE OPEN POSITION OF 70 DEGREES, THE DOOR SHALL MOVE TO THE CLOSE POSITION IN 1.5 SECONDS MINIMUM. ALL CLOSER MUST COMPLY WITH CBC 11B-404.2.8.1 - DOOR CLOSER AND GATE CLOSERS SHALL BE ADJUSTED SO THAT FROM AN OPEN POSITION OF 90 DEGREES, THE TIME REQUIRED TO MOVE THE DOOR TO A POSITION OF 12 DEGREES FROM THE LATCH IS 5 SECONDS OR LESS.

6. THE MAXIMUM AREA OF EXTERIOR WALL OPENING PER CBC TABLE 705.8 AND THE FIRE PROTECTION FOR EXTERIOR WALL PER CBC TABLE 602. ALL FIRE PROTECTION BASED ON THE FIRE SEPARATION DISTANCE.

7. DOOR LOCATION MAY VARY BASED ON PROJECT REQUIREMENTS.

8. (PH) ON PLANS THE SHEET INDICATES REQUIRED PANIC HARDWARE.

9. PROVIDE EXIT SIGNS AS REQUIRED PER CBC SECTION 1013.4. SEE DETAILS PER A0.2

10. ALL EXIT DOORS SHALL BE OPENABLE FROM INSIDE W/O ANY USE OF SPECIAL TOOLS, KNOWLEDGE OR EFFORT.

9 Doors

Window Schedule

Mark	Type Mark	Height x Width	Function	Type Comments	Glazing	Source
A	W1	4'-0" x 8'-0"	XOX	Clear Anodized Alum. Frame	*DP	Manufacturer
B	W2	4'-0" x 4'-0"	XO	Clear Anodized Alum. Frame	*DP	Manufacturer
~~C~~	~~W3~~	~~21ø~~		~~SOLAR TUBE~~		~~Manufacturer~~
~~D~~	~~W4~~	~~21ø~~		~~SOLAR TUBE~~		~~Manufacturer~~

NFRC LABELS SHALL STAY ON THE FENESTRATION PRODUCTS UNTIL THE INSPECTOR HAS VERIFIED THAT THE INSTALLED U-FACTOR, SHGC, AND VT MATCH THE WINDOW SCHEDULE

SEE NOTE 1.
46" MAX w/ OBSTRUCTION FOR SIDE APPROACH
44" MAX w/ OBSTRUCTION FOR FRONT APPROACH
OVER 24" DEEP X 34" MAX HIGH OBSTRUCTION WITH ACCESSIBLE KNEE/TOE SPACE

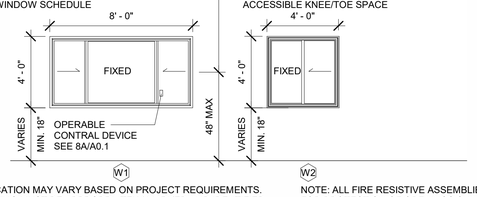

WINDOW LOCATION MAY VARY BASED ON PROJECT REQUIREMENTS. SAFETY GLAZING MUST BE APPROPRIATELY MARKED AND IDENTIFIED.

WINDOW - 3/4" INSULATING GLASS UNIT PERFORMANCE
U-VALUE : 0.35
SHGC : 0.24
VT : 0.5

ABBREVIATIONS:
DP - DUAL PANE
T - TEMPERED GLASS

NEW BUILDINGS THAT ARE INCLUDED IN PUBLIC SCHOOLS (KINDERGARTEN THROUGH 12TH GRADE) SHALL INCLUDE LOCKS THAT ALLOW DOORS TO CLASSROOMS AND ANY ROOM WITH AN OCCUPANCY OF FIVE OR MORE PERSONS TO BE LOCKED FROM THE INSIDE. THE LOCKS SHALL CONFORM TO THE SPECIFICATION AND REQUIREMENTS FOUND IN SECTION 1010.1.9 Education Code 17075.50,

NOTE: ALL FIRE RESISTIVE ASSEMBLIES FOR PROTECTION OF OPENINGS SHALL COMPLY WITH THE PROVISIONS OF SECTION 716 CBC.

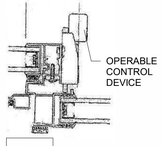

8 Windows

8A

1. PLACE (2) PERMANENT METAL IDENTIFICATION LABELS ON EACH MODULE. CLIMATE ZONE DATA INCLUDED ON LABEL
   (1) LABEL AT REAR EXTERIOR
   (1) LABEL ABOVE CEILING LINE AT INTERIOR FRAME.
   LABELS WILL BE MECHANICALLY FASTENED AND SHOW THE DSA APPLICATION NUMBER, MANUFACTURERS NAME AND SERIAL NUMBER, DESIGN LIVE LOAD FOR ROOF AND FLOOR FRAMING, WIND SPEED, EXPOSURE CATEGORY, AND Kzt = 1.0 PER 2022 CBC

2. VINYL TACKBOARD TO HAVE A CLASS 1 FLAME SPREAD RATING AND COMPLY WITH A SMOKE DENSITY OF 175

3. VERIFIED ALL DIMENSIONS PRIOR TO CONSTRUCTION

4. SEE INTERIOR ELEVATIONS FOR ALL REQUIRED EGRESS SIGNAGE AND FIRE ALARM SYSTEM COMPONENTS

5. WHEN RELOCATING OR REMOVING INTERIOR PARTITIONS (2) EXITS OR EXIT ACCESS DOORWAYS FROM ANY SPACE SHALL BE PROVIDED. EXIT DOORS MUST BE SEPERATED BY A DISTANCE APART EQUAL TO OR NOT LESS THAN ONE-HALF OF THE MAXUMUM OVERALL DIAGONAL DIMENSION FOR ALL NONSPRINKLERED BUILDINGS. EXIT DOORS MUST BE SEPERATED BY A DISTANCE APART EQUAL TO OR NOT LESS THAN ONE-THIRD OF THE MAXUMUM OVERALL DIAGONAL DIMENSION FOR ALL SPRINKLERED BUILDINGS. ALL EXIT AND EXIT ACCESS DOORWAYS MUST COMPLY WITH CBC SECTION 1015 EXIT AND EXIT ACCESS DOORWAYS AND CBC SECTION 1016 EXIT ACCESS TRAVEL DISTANCE.

6. OCCUPANCY LOAD SIGNS SHALL BE POSTING AND COMPLY WITH CBC SECTION 1004.3

7. SEE ADDITIONAL PC FOR ACCESS RAMPS AND STAIRS. WHERE RAMP IS AGAINST THE WALL AT PLASTER EXTERIOR OR ADJACENT TO ANY ABRASIVE SURFACE THEN A SMOOTH TROWEL SURFACE MUST BE PROVIDED AT THESE LOCATIONS OR AN ALTERNATIVE APPLICATION THAT COMPLIES WITH CBC SECTION 11B-505.8

8. ALL SURFACES ADJACENT TO HANDRAILS SHALL NOT HAVE ANY SHARP, ABRASIVE, OR PROTRUDING COMPONENTS

9. HANDRAIL GRIPPING SURFACES AND ANY SURFACES ADJACENT TO THEM SHALL BE FREE OF SHARP OR ABRASIVE ELEMENTS AND SHALL HAVE ROUNDED EDGES. PER 11B-505.8

10. FOR PLASTER WALLS PROVIDE CONTROL JOINTS AT ALL MODLINES, ENDWALLS @ 2'-0 FROM EDGE, 10'-0" o/c @ SIDEWALLS, AND ABOVE AND BELOW ALL OPENING. SEE EXTERIOR ELEVATIONS. ALL MATERIALS, MEANS, METHODS, AND PROCEEDURES OF CONSTRUCTION USED TO PROTECT JOINTS SHALL COMPLY WITH FIRE RATED WALL ASSEMPLY PER CBC SECTION 703.2 - FIRE RESISTANCE RATING AND CBC SECTION 705 - EXTERIOR WALLS

11. FOR HVAC UNITS WHICH HEIGHT FROM GRADE TO BOTTOM OF UNIT EXCEEDS 27" AND LOCATED IN PEDESTRIAN PATH OF TRAVEL, A PROTECTION RAIL AROUND THE HVAC UNIT WILL BE PROVIDED. PER MNF INSTALLATION INSTRUCTIONS. SEE 4/A7.2 OR 5/A7.2.

2 A0.1 GENERAL NOTES

MOISTURE PROTECTION INSULATION:

MATERIAL:
INSULATING MATERIAL FOR WALLS, CEILINGS, AND FLOORS SHALL BE FIBERGLASS BATTS (UNFACED) AND SHALL COMPLY WITH CBC 2022.
(CLASS A = 0-25 FLAME SPREAD:) SMOKE DEVELOPMENT DENSITY LESS THAN 450.

INSULATION VALUES
SEE TITLE 24 SHEETS FOR REQUIRED INSULATION VALUES PER CLIMATE ZONE

EXTERIOR WALL INSULATION (MIN.)
☒ R-19 (2x6 STUD) JOHNS MANSVILLE OR EQUAL

INTERIOR WALL INSULATION (MIN.)
☒ R-13

FLOOR INSULATION (MIN.)
☐ CONCRETE SLAB WITH R-19 FIBERGLASS INSULATION
☒ PLYWOOD FLOOR WITH R-19 FIBERGLASS INSULATION

ROOF INSULATION (MIN.)
☐ R-36 (EPDM)
☒ R-36 CONTINUOUS R-X (STANDING SEAM)

TABLE 1202.3
INSULATION FOR CONDENSATION CONTROL

CLIMATE ZONE	MINIMUM R-VALUE OF AIR-IMPERMEABLE INSULATION[a]
2B and 3B tile roof only	0 (none required)
1, 2A, 2B, 3A, 3B, 3C	R-5
4C	R-10
4A, 4B	R-15
5	R-20
6	R-25
7	R-30
8	R-35

a. Contributes to, but does not supersede, thermal resistance requirements for attic and roof assemblies in the California Energy Code.

3 Insulation Specs

EMERGENCY EXIT AND PANIC HARDWARE: **INDICATE ON DRAWINGS AND SPECIFICATIONS COMPLIANCE WITH SFM STANDARD 12-10-3,SECTION 12-10-302**. (a) THE CROSS BAR SHALL EXTEND ACROSS NOT LESS THAN ONE-HALF THE WIDTH OF THE DOOR/GATE. (d) THE ENDS OF THE CROS-BAR SHALL BE CURVED, GUARDED OR OTHERWISE DESIGNED TO PREVEN CATCHING ON THE CLOTHING OF PERSONS DURING EGRESS. **PROVIDE CUT-SHEETS OF PANIC HARDWARE** PROVIDE THE ASSEMBLY DESIGN NUMBER FOR ALL FIRE-RATED CONSTRUCTION COMPONENTS. INSTALLATION DETAILS MUST BE COORDINATED WITH THE DESIGN NUMBERS. CUSTOM DESIGNS WHICH COMBINE COMPONENTS FROM VARIOUS DESIGNS BUT HAVE NOT BEEN TESTED AS A LISTED ASSEMBLY WILL NOT BE ACCEPTABLE.

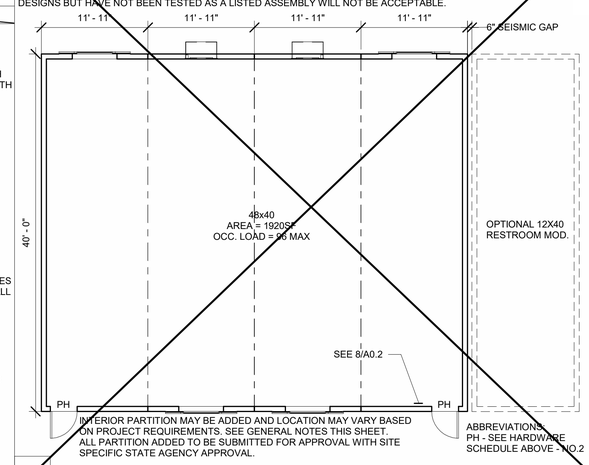

INTERIOR PARTITION MAY BE ADDED AND LOCATION MAY VARY BASED ON PROJECT REQUIREMENTS. SEE GENERAL NOTES THIS SHEET.
ALL PARTITION ADDED TO BE SUBMITTED FOR APPROVAL WITH SITE SPECIFIC STATE AGENCY APPROVAL.

ABBREVIATIONS:
PH - SEE HARDWARE SCHEDULE ABOVE - NO.2

6 48x40 (Total Area 1920sf)

Finish Schedule

Room Number	Flooring		Wall Finish				Ceiling		Notes
	Floor	Base	Front	Left	Rear	Right	Type	Ht.	
CLASSROOM	Carp.	4" TS	Tack	Tack	Tack	Tack	CP	8'-6"	
~~CLASSROOM w/ PH~~	~~Carp.~~	~~4" TS~~	~~Tack~~	~~Tack~~	~~Tack~~	~~Tack~~	~~CP~~	~~8'-6"~~	
SINGLE OCC.	SV	6" TS	FRP	FRP	FRP	FRP	CP	8'-0"	
~~SINGLE OCC.~~	~~SV~~	~~SC~~	~~FRP~~	~~FRP~~	~~FRP~~	~~FRP~~	~~GBP~~	~~8'-0"~~	

Abbreviations:

FLOORING
- CARP: COMPLYING WITH GROUP 1; TYPE "A" OR TYPE "B"; CLASS 2; DENSITY 4600; DIRECT GLUE DOWN
- SV: SHEET VINYL FLOORING
- VCT: VINYL COMPOSITION TILE

BASE
- 4" TS: 4" TOP SET BASE
- 6" TS: 6" TOP SET BASE
- 6" SC: SELF COVE

WALLS
- TACK: 1/2" VINYL TACKBOARD CLASS 1 OVER 1/2" GYPSUM BOARD BACKING
- FRP: 1/8" FIBER REINFORCED PANEL OVER 1/2" WATER RESISTANT GYPSUM BOARD
- GYP: 1/2" GYPSUM BOARD; TAPE; TEXTURE; PAINTED FINISH
- PLY: 1/2" PLYWOOD FINISH
- NF: NO FINISH SC: 6" SELF-COVE BASE

CEILING
- CP: ACOUSTICAL LAY IN GRID CEILING PANELS
- HC: 5/8" GYPSUM BOARD; TAPE; TEXTURE; PAINTED FINISH
- GBP: 1/2" GYPSUM BOARD WASHABLE PANELS (PAINTED)

Finishes Notes

1. ALL FINISHES SHALL COMPLY WITH CBC, TITLE 19, AND C.F.C

2. PER ASTM D2047 ALL FLOORING WITH A COEFFICIENT OF FRICTION OF A MINIMUM OF 0.6 WILL BE CONSIDERED TO OBTAIN THE INTENT OF A SLIP RESISTANCE SURFACE.

3. FLOORING CONTRACTOR IS RESPONSIBLE FOR SUB-FLOORING PREPARATION. ALL PLYWOOD TO BE APA RATED AND COMPLY WITH PS1-19. PLYWOOD SURFACE TO BE CARPETED IS TO BE PLUGGED AND SANDED BY FLOORING CONTRACTOR. ALL DEFORMITIES OCCURRING DUE TO STANDARD CONSTRUCTION PRACTICES SHALL BE PLUGGED AND SANDED BY FLOOR CONTRACTOR. MATELINE JOINTS TO BE A MAX OF 1/8" AND SHALL BE PLUGGED AND SANDED BY FLOORING CONTRACTORS.

4. ALL CARPET AND FLOOR FINISH MUST COMPLY PER CBC SECTION 11B-302 FLOOR AND GROUND SURFACES. ALL CHANGES IN ELEVATION SHALL COMPLY WITH CBC SECTION 11B-303 CHANGES IN LEVELS

5 Finishes and Materials

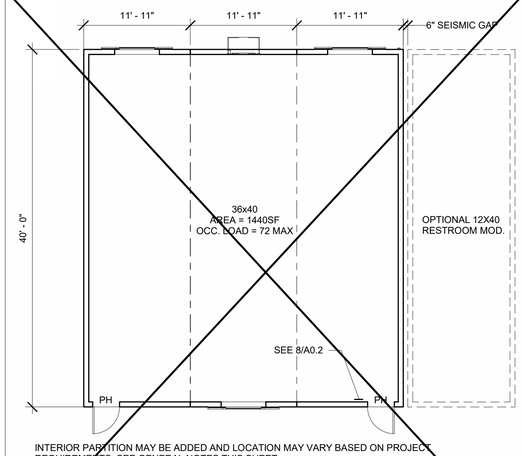

INTERIOR PARTITION MAY BE ADDED AND LOCATION MAY VARY BASED ON PROJECT REQUIREMENTS. SEE GENERAL NOTES THIS SHEET.
ALL PARTITION ADDED TO BE SUBMITTED FOR APPROVAL WITH SITE SPECIFIC STATE AGENCY APPROVAL.

ABBREVIATIONS:
PH - SEE HARDWARE SCHEDULE ABOVE - NO.2

4 36x40 (Total Area 1440sf)

HARDWARE SCHEDULE

~~EXT CLASSROOM DOORS W/ PANIC~~ **HW1**

LOCKSET	SCHLAGE RIM CYLINDER 20022 C123 626 1-BITTED	Finish Alum or equal
EXIT DEVICE	VON DURPIN AX -PA 99L-2 626	Finish 26D or equal
BUTTS	TAH FB179 4.5 X 4.5 NRP 626	Finish 689 or equal
CLOSER	NORTON 8501DA 689	Finish Alum or equal
WEATHER STRIP	HAGER 891SAV 3684	Finish Alum or equal
THRESHOLD	HAGER 413SA 36	Finish Alum or equal
DOOR BOTTOM	PEMCO 315CN 36	Finish Alum or equal

EXT CLASSROOM DOORS **HW2**

LOCKSET	TAH LHV 75 SAT 626	Finish 26D or equal
LOCKSET	SCHLAGE 23-065 626 W/ SPECIAL TAIL	Finish 26D or equal
BUTTS	TAH FB179 4.5 X 4.5 NRP 626	Finish 26D or equal
CLOSER	NORTON 8501DA 689	Finish 689 or equal
WEATHER STRIP	HAGER 891SAV 3684	Finish Alum or equal
THRESHOLD	HAGER 413SA 36	Finish Alum or equal
DOOR BOTTOM	PEMCO 315CN 36	Finish Alum or equal

~~INT BOYS & GIRLS RESTROOM DOORS~~ **~~HW3~~**

LOCKSET	TAH LHV 70 SAT 626	Finish 26D or equal
LOCKSET	SCHLAGE 23-065 626 W/ SPECIAL TAIL	Finish 26D or equal
BUTTS	TAH FB179 4.5 X 4.5 NRP 626	Finish 26D or equal
CLOSER	NORTON 8501DA 689	Finish 689 or equal
WEATHER STRIP	HAGER 891SAV 3684	Finish Alum or equal
THRESHOLD	HAGER 413SA 36	Finish Alum or equal
DOOR BOTTOM	PEMCO 315CN 36	Finish Alum or equal
DOOR PROTECTION PLATE	HAGER 190S 10 X 34 630	Finish Alum or equal

NOTE: ALL CLASSROOM DOORS SHALL BE LOCKABLE FROM INSIDE

7 Door Hardware

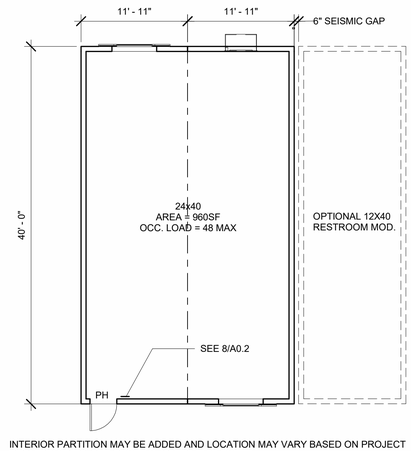

INTERIOR PARTITION MAY BE ADDED AND LOCATION MAY VARY BASED ON PROJECT REQUIREMENTS. SEE GENERAL NOTES THIS SHEET.
ALL PARTITION ADDED TO BE SUBMITTED FOR APPROVAL WITH SITE SPECIFIC STATE AGENCY APPROVAL.

ABBREVIATIONS:
PH - SEE HARDWARE SCHEDULE ABOVE - NO.2

1 24x40 (Total Area 960sf)

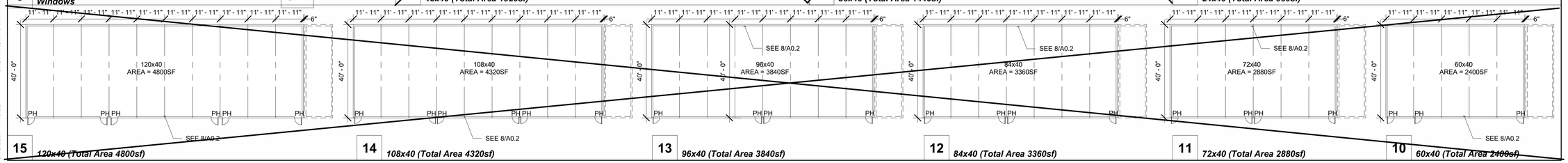

15 120x40 (Total Area 4800sf)
14 108x40 (Total Area 4320sf)
13 96x40 (Total Area 3840sf)
12 84x40 (Total Area 3360sf)
11 72x40 (Total Area 2880sf)
10 60x40 (Total Area 2400sf)

PROJECT SPECIFIC STATE AGENCY APPROVAL

IDENTIFICATION STAMP
DIV. OF THE STATE ARCHITECT
APP: 02-123433 INC:
REVIEWED FOR
SS ☑ FLS ☑ ACS ☑
DATE: 01/20/2026

R&S TAVARES ASSOCIATES
DESIGN ● CONSULTING ● PROJECT MGT
11590 W BERNARDO COURT, SUITE 100
SAN DIEGO, CA 92127
WWW.RSTAVARES.COM

PROFESSIONAL STAMP

REGISTERED PROFESSIONAL ENGINEER
JANNY D. FRANCISCO
No. 33380
Exp. 03/31/24
STRUCTURAL
STATE OF CALIFORNIA
RST#22088
02/16/24

THE PLANS, IDEAS & DESIGNS SHOWN ON THESE DRAWINGS ARE THE PROPERTY OF R&S TAVARES ASSOCIATES, INC. DEVISED SOLELY FOR THIS CONTRACT. THESE PLANS SHALL NOT BE USED, IN WHOLE OR IN PART, FOR ANY PURPOSE FOR WHICH THEY WERE NOT INTENDED WITHOUT THE EXPRESS WRITTEN CONSENT OF R&S TAVARES ASSOCIATES, INC. ©

CLIENT

Class Leasing
1651Juanita Street, San Jacinto, CA 92583
Voice (951) 943-1908 Fax (951)943-5768

ORIGINAL PC STATE AGENCY APPROVAL

APPROVED
DIV. OF THE STATE ARCHITECT
APP: 04-123059 PC
REVIEWED FOR
SS ☑ FLS ☑ ACS ☑ CG ☑
DATE: 02/20/2024

Revision Schedule

#	Description	Date

PRE-CHECK (PC) DOCUMENT

Code: 2022 CBC

A separate project application for construction is required

PROJECT TITLE
PC 2022 CBC: 24' x 40' EXPANDABLE TO 120' x 40'

SHEET TITLE
TYPICAL KEY PLAN AND SCHEDULES, GEN NOTES,

PROJECT NUMBER
22088

DRAWN BY
rMc/SC

CHECKED BY
RH/RT

DATE

SHEET NO.
A0.1

SHEET OF

C:\Users\User\Documents\20093 - Aries, 24x40 PC - MainFile - Low Seismic_6.7_CESAR24D63.rvt
6/15/2021 11:49:02 PM

CHAPTER 11:COMMUNICATION ELEMENTS AND FEATURES

11B.702 Fire Alarm Systems
11B.702.1 General. Fire alarm systems shall have permanently installed audible and visible alarms complying with NFPA 72 (2022 edition)
except that the maximum allowable sound level of audible notification appliances complying with section 11B.4-3.2.1 of NFPA 72 shall have a sound level no more than 110 dB at the minimum hearing distance from the audible appliance. In addition, alarms in guest rooms required to provide communication features shall comply with NFPA 72 (2022 edition)

11B.703 Signs

11B.703.1 General. Signs shall comply with 703. Where both visual and tactile characters are required, either one sign with both visual and tactile characters, or two separate signs, one with visual, and one with tactile characters, shall be provided.

11B.703.2 Raised Characters. Raised characters shall comply with 703.2 and shall be duplicated in braille complying with 703.3. Raised characters shall be installed in accordance with 703.4.

11B.703.2.1 Depth. Raised characters shall be 1/32 inch (0.8 mm) minimum above their background.

11B.703.2.2 Case. Characters shall be uppercase.

11B.703.2.3 Style. Characters shall be sans serif. Characters shall not be italic, oblique, script, highly decorative, or of other unusual forms.

11B.703.2.4 Character Proportions. Characters shall be selected from fonts where the width of the uppercase letter "O" is 60 percent minimum and 110 percent maximum of the height of the uppercase letter "I".

11B.703.2.5 Character Height. Character height measured vertically from the baseline of the character shall be 5/8 inch (15.9 mm) minimum and 2 inches (51 mm) maximum based on the height of the uppercase letter "I".

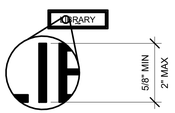

Figure 703.2.5 Height of Raised Characters

TABLE 11B-703.3.1
BRAILLE DIMENSIONS

MEASUREMENT RANGE	MINIMUM IN INCHES MAXIMUM IN INCHES
Dot base diameter	0.059 (1.5 mm) to 0.063 (1.6 mm)
Distance between two dots in the same cell[1]	*0.100 (2.5 mm)*
Distance between corresponding dots in adjacent cells[1]	*0.300 (7.6 mm)*
Dot height	0.025 (0.6 mm) to 0.037 (0.9 mm)
Distance between corresponding dots from one cell directly below[1]	0.395 (10 mm) to 0.400 (10.2 mm)

1. Measured center to center.

11B.703.2.6 Stroke Thickness for raised characters. Stroke thickness of the uppercase letter "I" shall be 15 percent maximum of the height of the character.

11B.703.2.7 Character Spacing. Character spacing shall be measured between the two closest points of adjacent raised characters within a message, excluding word spaces. Where characters have rectangular cross sections, spacing between individual raised characters shall be 1/8 inch (3.2 mm) minimum and 4 times the raised character stroke width maximum. Where characters have other cross sections, spacing between individual raised characters shall be 1/16 inch (1.6 mm) minimum and 4 times the raised character stroke width maximum at the base of the cross sections, and 1/8 inch (3.2 mm) minimum and 4 times the raised character stroke width maximum at the top of the cross sections. Characters shall be separated from raised borders and decorative elements 3/8 inch (9.5 mm) minimum.

11B.703.2.8 Line Spacing. Spacing between the baselines of separate lines of raised characters within a message shall be 135 percent minimum and 170 percent maximum of the raised character height.

11B.703.3 Braille. Braille shall be contracted (Grade 2) and shall comply with 703.3 and 703.4.

11B.703.3.1 Dimensions and Capitalization. Braille dots shall have a domed or rounded shape and shall comply with Table 703.3.1. The indication of an uppercase letter or letters shall only be used before the first word of sentences, proper nouns and names, individual letters of the alphabet, initials, and acronyms.

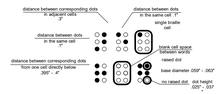

Figure 703.3.1 Braille Measurement

11B.703.3.2 Position. Braille shall be positioned below the corresponding text. If text is multi-lined, braille shall be placed below the entire text. Braille shall be separated 3/8 inch (9.5 mm) minimum from any other tactile characters and 3/8 inch (9.5 mm) minimum from raised borders and decorative elements.

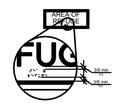

Figure 703.3.2 Position of Braille

11B.703.4 Installation Height and Location. Signs with tactile characters shall comply with 703.4.

11B.703.4.1 Height Above Finish Floor or Ground. Tactile characters on signs shall be located 48 inches (1220 mm) minimum above the finish floor or ground surface, measured from the baseline of the lowest braille character and 60 inches (1525 mm) minimum above the finish floor or ground surface, measured from the baseline of the highest tactile character.

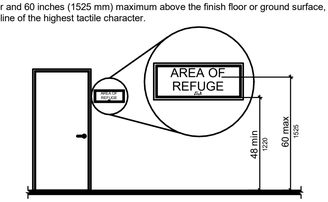

48" min to baseline of lowest level of braille text.

Figure 703.4.1 Height of Tactile Characters Above Finish Floor or Ground

11B.703.4.2 Location. Where a tactile sign is provided at a door, the sign shall be located alongside the door at the latch side. Where a tactile sign is provided at double doors with one active leaf, the sign shall be located on the inactive leaf. Where a tactile sign is provided at double doors with two active leafs, the sign shall be located to the right of the right hand door. Where there is no wall space at the latch side of a single door or at the right side of double doors, signs shall be located on the nearest adjacent wall. Signs containing tactile characters shall be located so that a clear floor space of 18 inches (455 mm) minimum by 18 inches (455 mm) minimum, centered on the tactile characters, is provided beyond the arc of any door swing between the closed position and 45 degree open position.

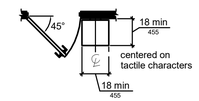

Figure 703.4.2 Location of Tactile Signs at Doors

11B.703.5 Visual Characters. Visual characters shall comply with 703.5.

11B.703.5.1 Finish and Contrast. Characters and their background shall have a non-glare finish. Characters shall contrast with their background with either light characters on a dark background or dark characters on a light background.

11B.703.5.2 Case. Characters shall be uppercase or lowercase or a combination of both.

11B.703.5.3 Style. Characters shall be conventional in form. Characters shall not be italic, oblique, script, highly decorative, or of other unusual forms.

11B.703.5.4 Character Proportions. Characters shall be selected from fonts where the width of the uppercase letter "O" is 60 percent minimum and 110 percent maximum of the height of the uppercase letter "I".

11B.703.5.5 Character Height. Minimum character height shall comply with Table 703.5.5. Viewing distance shall be measured as the horizontal distance between the character and an obstruction preventing further approach towards the sign. Character height shall be based on the uppercase letter "I".

11B.703.5.6 Height From Finish Floor or Ground. Visual characters shall be 40 inches (1015 mm) minimum above the finish floor or ground.

11B.703.5.7 Stroke Thickness. Stroke thickness of the uppercase letter "I" shall be 10 percent minimum and 20 percent maximum of the height of the character.

11B.703.5.8 Character Spacing. Character spacing shall be measured between the two closest points of adjacent characters, excluding word spaces. Spacing between individual characters shall be 10 percent minimum and 35 percent maximum of character height.

11B.703.5.9 Line Spacing. Spacing between the baselines of separate lines of characters within a message shall be 135 percent minimum and 170 percent maximum of the character height.

11B.703.6 Pictograms. Pictograms shall comply with 703.6.

11B.703.6.1 Pictogram Field. Pictograms shall have a field height of 6 inches (150 mm) minimum. Characters and braille shall not be located in the pictogram field.

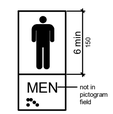

Figure 703.6.1 Pictogram Field
dark-on-light.

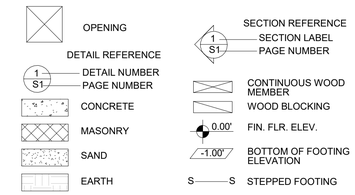

THE "INTERNATIONAL SYMBOL FOR ACCESS FOR HEARING LOSS" PROPORTIONS SHALL BE APPROXIMATE CBC FIGURE 11B-703.7.2.4

"INFORMATION TO BE PROVIDED WHEN BUILDINGS ARE SITE LOCATED"

REQUIRED PER 11B-219 & 11B-706
(SEE FLOOR PLANS FOR MORE INFO)

NOTE: TEXT ON THIS SIGN IN VISUAL

MAXIMUM OCCUPANCY

PERSONS

OCCUPANT LOAD SIGN REQUIRED PER DSA BU11-08.

EVERY ROOM OR SPACE WHICH IS USED FOR ASSEMBLY, CLASSROOM, DINING OR SIMILAR PURPOSES HAVING AN OCCUPANT LOAD OF 50 OR MORE SHALL HAVE THE OCCUPANT LOAD OF THE ROOM OR SPACE POSTED IN A CONSPICUOUS PLACE, NEAR THE MAIN EXIT OR EXIT ACCESS DOORWAY

5 *1/4" = 1'-0"*
Sign Notes

7 *1" = 1'-0"*
Assistive Listening System Symbol

8 *1" = 1'-0"*
EQUIPMENT ANCHORAGE

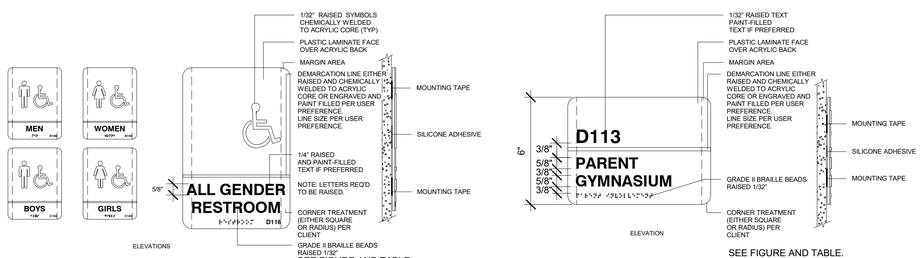

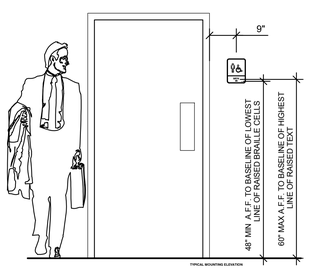

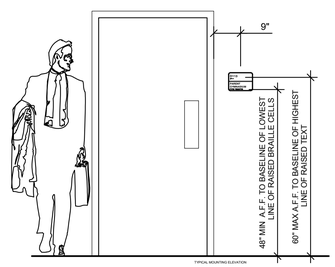

4 *1/2" = 1'-0"*
Signage*(OFOI - UNO)*

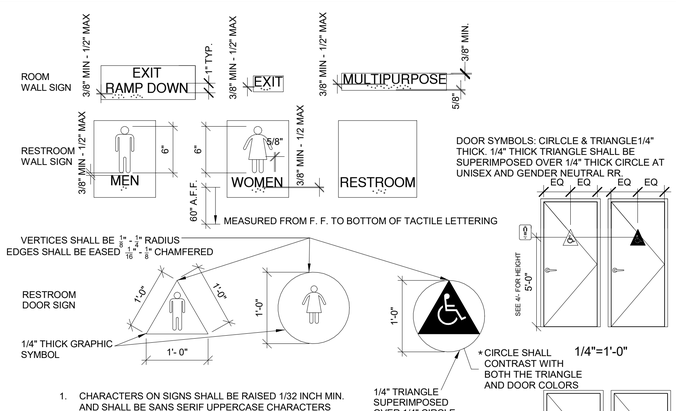

1. CHARACTERS ON SIGNS SHALL BE RAISED 1/32 INCH MIN. AND SHALL BE SANS SERIF UPPERCASE CHARACTERS ACCOMPANIED BY GRADE 2.

2. RAISED CHARACTERS SHALL BE A MINIMUM OF 5/8 INCH AND A MAXIMUM OF 2 INCHES HIGH.

3. CONTRAST BETWEEN CHARACTERS, SYMBOLS AND THEIR BACKGROUND MUST BE 70% MINIMUM AND HAVE A NON-GLARE FINISH. 11B-703-5.1.

6. 11B-703.2.6 STROKE THICKNESS. STROKE THICKNESS OF THE UPPERCASE LETTER "I" SHALL BE 15 PERCENT MAXIMUM OF THE HEIGHT OF THE CHARACTER.

CALIFORNIA CONTRACTED BRAILLE SHALL BE USED WHENEVER BRAILLE IS REQUIRED IN OTHER PORTIONS OF THESE STANDARDS.
DOTS SHALL BE 1/10 INCH ON CENTERS IN EACH CELL WITH 2/10 INCH SPACE BETWEEN CELLS, MEASURED THE SECOND COLUMN OF DOTS IN THE FIRSTCELL TO THE FIRST COLUMN OF DOTS IN THE SECOND CELL.
DOTS SHALL BE RAISED A MINIMUM OF 1/40 INCHES ABOVE THE BACKGROUND.
SEE FIGURE AND TABLE. SEE 2/A0.2

* **NOTE FOR UNISEX OR SINGLE USER RESTROOM DOOR SYMBOL:**
THE COLOR OF THE TRIANGLE SHALL CONTRAST WITH THE COLOR OF THE CIRCLE SYMBOL, EITHER LIGHT ON A DARK BACKGROUND OR DARK ON A LIGHT BACKGROUND. THE COLOR OF THE CIRCLE SYMBOL SHALL CONTRAST WITH THE COLOR OF THE DOOR OR SURFACE ON WHICH THE COMBINED CIRCLE AND TRIANGLE SYMBOL IS MOUNTED, EITHER LIGHT ON A DARK BACKGROUND OR DARK ON A LIGHT BACKGROUND.

3 *1/4" = 1'-0"*
Signage and Notes

BRAILLE DIMENSIONS

MEASUREMENT RANGE	MINIMUM IN INCHES MAXIUMN IN INCHES
Dot base diameter	0.059 (1.5mm) to 0.063 (1.6mm)
Distance between two dots in the same cell[1]	0.100 (2.5 mm)
Distance between corresponding dots in adjacent cells[1]	0.300 (7.6 mm)
Dot height	0.025 (0.6 mm) to 0.037 (0.09mm)
Distance between corresponding dots from once cell directly below[1]	0.395 (10 mm) to 0.400 (10.2 mm)

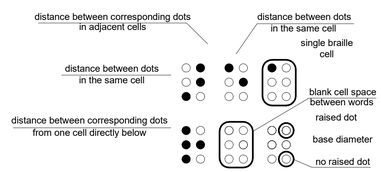

9 *1/2" = 1'-0"*
BRAILLE DIMENSIONS

PROJECT SPECIFIC STATE AGENCY APPROVAL

IDENTIFICATION STAMP
DIV. OF THE STATE ARCHITECT
APP: 02-123433 INC:
REVIEWED FOR
SS ☑ FLS ☑ ACS ☑
DATE: 01/20/2026

R&S TAVARES ASSOCIATES
DESIGN ♦ CONSULTING ♦ PROJECT MGT
11590 W Bernardo Court, Suite 100
San Diego, CA 92127
www.rstavares.com

PROFESSIONAL STAMP

REGISTERED PROFESSIONAL ENGINEER
RANDY D. FRANCISCO
No. 63380
Exp. 03/31/24
STRUCTURAL
STATE OF CALIFORNIA
RST#22088
02/16/24

THE PLANS, IDEAS & DESIGNS SHOWN ON THESE DRAWINGS ARE THE PROPERTY OF R&S TAVARES ASSOCIATES, INC. DEVISED SOLELY FOR THIS CONTRACT. THESE PLANS SHALL NOT BE USED, IN WHOLE OR IN PART, FOR ANY PURPOSE FOR WHICH THEY WERE NOT INTENDED WITHOUT THE EXPRESS WRITTEN CONSENT OF R&S TAVARES ASSOCIATES, INC. ©

CLIENT

Class Leasing
1651Juanita Street, San Jacinto, CA 92583
Voice (951) 943-1908 Fax (951)943-5768

ORIGINAL PC STATE AGENCY APPROVAL

APPROVED
DIV. OF THE STATE ARCHITECT
APP: 04-123059 PC
REVIEWED FOR
SS ☑ FLS ☑ ACS ☑ CG ☑
DATE: 02/20/2024

Revision Schedule

#	Description	Date

PRE-CHECK (PC) DOCUMENT

Code: 2022 CBC

A separate project application for construction is required

PROJECT TITLE
PC 2022 CBC: 24' x 40' EXPANDABLE TO 120' x 40'

SHEET TITLE
SIGNAGE AND SYMBOLS

PROJECT NUMBER
22088

DRAWN BY
rMc/SC

CHECKED BY
RH/RT

DATE

SHEET NO.
A0.2

SHEET OF

6/15/2021 11:49:05 PM C:\Users\User\Documents\20093 - Aries, 24x40 PC - MainFile - Low Seismic_6.7_CESAR24D63.rvt

DSA 103-22: LISTING OF STRUCTURAL TESTS & SPECIAL INSPECTIONS, 2022 CBC

Application Number: 11-111111	**School Name:** 1	**School District:** 1
DSA File Number:	**Increment Number:**	**Date Created:** 2023-05-16 13:57:04

2022 CBC

IMPORTANT: This form is only a summary list of structural tests and some of the special inspections required for the project. Generally, the structural tests and special inspections noted on this form are those that will be performed by the Geotechnical Engineer of Record, Laboratory of Record, or Special Inspector. The actual complete test and inspection program must be performed as detailed on the DSA approved documents. The appendix at the bottom of this form identifies work NOT subject to DSA requirements for special inspection or structural testing. The project inspector is responsible for providing inspection of all facets of construction, including but not limited to, special inspections not listed on this form such as structural wood framing, high-load wood diaphragms, cold-formed steel framing, anchorage of non-structural components, etc., per Title 24, Part 2, Chapter 17A (2022 CBC).

****NOTE:** Undefined section and table references found in this document are from the CBC, or California Building Code.

KEY TO COLUMNS

1. TYPE	2. PERFORMED BY
Continuous – Indicates that a continuous special inspection is required	**GE (Geotechnical Engineer)** – Indicates that the special inspection shall be performed by a registered geotechnical engineer or his or her authorized representative.
Periodic – Indicates that a periodic special inspection is required	**LOR (Laboratory of Record)** – Indicates that the test or special inspection shall be performed by a testing laboratory accepted in the DSA Laboratory Evaluation and Acceptance (LEA) Program. See CAC Section 4-335.
Test – Indicates that a test is required	**PI (Project Inspector)** - Indicates that the special inspection may be performed by a project inspector when specifically approved by DSA.
	SI (Special Inspection) – Indicates that the special inspection shall be performed by an appropriately qualified/approved special inspector.

	S/A1. STRUCTURAL STEEL, COLD-FORMED STEEL AND ALUMINUM USED FOR STRUCTURAL PURPOSES			
	Test or Special Inspection	**Type**	**Performed By**	**Code References and Notes**
☑	a. Verify identification of all materials and: • Mill certificates indicate material properties that comply with requirements. • Material sizes, types and grades comply with requirements.	Periodic	*	**Table 1705A.2.1 Item 3a–3c.** 2202A.1; AISI S100-20 Section A3.1 & A3.2, AISI S240-20 Section A3 & A5, AISI S220-20 Sections A4 & A6. * By special inspector or qualified technician when performed off-site.
☑	b. Test unidentified materials	Test	LOR	**2202A.1.**
☑	c. Examine seam welds of HSS shapes	Periodic	SI	DSA IR 17-3.
☑	d. Verify and document steel fabrication per DSA-approved construction documents.	Periodic	SI	Not applicable to cold-formed steel light-frame construction, except for trusses (**1705A.2.4**).
	S/A3. WELDING:			
	Test or Special Inspection	**Type**	**Performed By**	**Code References and Notes**
☑	a. Verify weld filler material identification markings per AWS designation listed on the DSA-approved documents and the WPS.	Periodic	SI	**1705A.2.5, Table 1705A.2.1 Items 4 & 5;** AWS D1.1 and AWS D1.8 for structural steel; AWS D1.2 for Aluminum; AWS D1.3 for cold-formed steel; AWS D1.4 for reinforcing steel; DSA IR 17-3.
☑	b. Verify weld filler material manufacturer's certificate of compliance.	Periodic	SI	DSA IR 17-3.
☑	c. Verify WPS, welder qualifications and equipment.	Periodic	SI	DSA IR 17-3.
	S/A4. SHOP WELDING (IN ADDITION TO SECTION S/A3):			
	Test or Special Inspection	**Type**	**Performed By**	**Code References and Notes**
☑	a. Inspect groove welds, multi-pass fillet welds, single pass fillet welds > 5/16", plug and slot welds.	Continuous	SI	**Table 1705A.2.1 Items 5a.1–4;** AISC 360-16 (and AISC 341-16 as applicable); DSA IR 17-3.
☑	b. Inspect single-pass fillet welds ≤ 5/16", floor and roof deck welds.	Periodic	SI	**1705A.2.2, Table 1705A.2.1 Items 5a.5 & 5a.6;** AISC 360-16 (and AISC 341-16 as applicable); DSA IR 17-3.
☑	c. Inspect welding of stairs and railing systems.	Periodic	SI	**1705A.2.1;** AISC 360-16 (and AISC 341-16 as applicable); AWS D1.1 & D1.3; DSA IR 17-3.
	Test or Special Inspection	**Type**	**Performed By**	**Code References and Notes**
	S/A6. NONDESTRUCTIVE TESTING:			
	Test or Special Inspection	**Type**	**Performed By**	**Code References and Notes**
☑	a. Ultrasonic	Test	LOR	**1705A.2.1, 1705A.2.5;** AISC 341-16 J6.2, AISC 360-16 N5.5; AWS D1.1, AWS D1.8; DSA IR 17-2.
☑	b. Magnetic Particle	Test	LOR	**1705A.2.1, 1705A.2.5;** AISC 341-16 J6.2, AISC 360-16 N5.5; AWS D1.1, AWS D1.8; DSA IR 17-2.

1. Structural Testing and Inspection: Laboratory Verified Report Form DSA 291
2. Shop Welding Inspection: Laboratory Verified Report Form DSA 291, or, for independently contracting SI, Special Inspection Verified Report Form DSA 292

NOTE:
THE EXAMPLE OF FORM DSA-103s SHOWN ON THIS SHEET ARE FOR ILLUSTRATION PURPOSE ONLY. A FORM DSA-103 IS TO BE COMPLETED FOR EACH APPLICATION THAT THIS PC BEING INCORPORATED INTO AND EXAMPLE FORM DSA-103s ARE TO BE CROSSED OUT ON THIS DRAWING.

3 DSA-103 PLYWOOD FLOOR (STOCKPILE)

DSA 103-22: LISTING OF STRUCTURAL TESTS & SPECIAL INSPECTIONS, 2022 CBC

Application Number: 11-111111	**School Name:** 1	**School District:** 1
DSA File Number:	**Increment Number:**	**Date Created:** 2023-05-16 14:08:48

2022 CBC

IMPORTANT: This form is only a summary list of structural tests and some of the special inspections required for the project. Generally, the structural tests and special inspections noted on this form are those that will be performed by the Geotechnical Engineer of Record, Laboratory of Record, or Special Inspector. The actual complete test and inspection program must be performed as detailed on the DSA approved documents. The appendix at the bottom of this form identifies work NOT subject to DSA requirements for special inspection or structural testing. The project inspector is responsible for providing inspection of all facets of construction, including but not limited to, special inspections not listed on this form such as structural wood framing, high-load wood diaphragms, cold-formed steel framing, anchorage of non-structural components, etc., per Title 24, Part 2, Chapter 17A (2022 CBC).

****NOTE:** Undefined section and table references found in this document are from the CBC, or California Building Code.

KEY TO COLUMNS

1. TYPE	2. PERFORMED BY
Continuous – Indicates that a continuous special inspection is required	**GE (Geotechnical Engineer)** – Indicates that the special inspection shall be performed by a registered geotechnical engineer or his or her authorized representative.
Periodic – Indicates that a periodic special inspection is required	**LOR (Laboratory of Record)** – Indicates that the test or special inspection shall be performed by a testing laboratory accepted in the DSA Laboratory Evaluation and Acceptance (LEA) Program. See CAC Section 4-335.
Test – Indicates that a test is required	**PI (Project Inspector)** - Indicates that the special inspection may be performed by a project inspector when specifically approved by DSA.
	SI (Special Inspection) – Indicates that the special inspection shall be performed by an appropriately qualified/approved special inspector.

Geotechnical Reports: Project does NOT have and does NOT require a geotechnical report

	S1. GENERAL:			
	Test or Special Inspection	**Type**	**Performed By**	**Code References and Notes**
☑	a. Verify that: • Site has been prepared properly prior to placement of controlled fill and/or excavations for foundations. • Foundation excavations are extended to proper depth and have reached proper material. • Materials below footings are adequate to achieve the design bearing capacity.	See Notes	PI	Refer to specific items identified in the Appendix listing exemptions for limitations. Placement of controlled fill exceeding 12" depth under foundations is not permitted without a geotechnical report.
	S2. SOIL COMPACTION AND FILL:			
	Test or Special Inspection	**Type**	**Performed By**	**Code References and Notes**
☑	a. Verify use of proper materials, densities and inspect lift thicknesses, placement and compaction during placement of fill.	Continuous	LOR*	* Under the supervision of a geotechnical engineer or LOR's engineering manager. Refer to specific items identified in the Appendix listing exemptions for limitations.
☑	b. Compaction testing.	Test	LOR*	* Under the supervision of a geotechnical engineer or LOR's engineering manager. Refer to specific items identified in the Appendix listing exemptions for limitations.
	C1. CAST-IN-PLACE CONCRETE			
	Test or Special Inspection	**Type**	**Performed By**	**Code References and Notes**
☑	a. Verify use of required design mix.	Periodic	SI	**Table 1705A.3 Item 5, 1910A.1.**
☑	b. Identify, sample, and test reinforcing steel.	Test	LOR	**1910A.2;** ACI 318-19 Ch.20 and Section 26.6.1.2; DSA IR 17-10. (See Appendix (end of this form) for exemptions.)
☑	c. During concrete placement, fabricate specimens for strength tests, perform slump and air content tests, and determine the temperature of the concrete.	Test	LOR	**Table 1705A.3 Item 6;** ACI 318-19 Sections 26.5 & 26.12.
☑	d. Test concrete (f'c).	Test	LOR	**1905A.1.17;** ACI 318-19 Section 26.12.
☑	e. Batch plant inspection: Continuous	See Notes	SI	Default of 'Continuous' per **1705A.3.3.** If approved by DSA, batch plant inspection may be reduced to 'Periodic' subject to requirements in Section **1705A.3.3.1**, or eliminated per **1705A.3.3.2**. See IR 17-13. (See Appendix (end of this form) for exemptions.)
	C5. POST-INSTALLED ANCHORS:			
	Test or Special Inspection	**Type**	**Performed By**	**Code References and Notes**
☑	a. Inspect installation of post-installed anchors	See Notes	SI*	**1617A.1.19, Table 1705A.3 Item 4a (Continuous) & 4b (Periodic), 1705A.3.8** (See Appendix (end of this form) for exemptions). ACI 318-14 Sections 17.8 & 26.13. * May be performed by the project inspector when specifically approved by DSA.
☑	b. Test post-installed anchors.	Test	LOR	**1910A.5.** (See Appendix (end of this form) for exemptions.)
	S/A1. STRUCTURAL STEEL, COLD-FORMED STEEL AND ALUMINUM USED FOR STRUCTURAL PURPOSES			
	Test or Special Inspection	**Type**	**Performed By**	**Code References and Notes**
☑	a. Verify identification of all materials and: • Mill certificates indicate material properties that comply with requirements. • Material sizes, types and grades comply with requirements.	Periodic	*	**Table 1705A.2.1 Item 3a–3c.** 2202A.1; AISI S100-20 Section A3.1 & A3.2, AISI S240-20 Section A3 & A5, AISI S220-20 Sections A4 & A6. * By special inspector or qualified technician when performed off-site.
☑	b. Test unidentified materials	Test	LOR	**2202A.1.**
☑	c. Examine seam welds of HSS shapes	Periodic	SI	DSA IR 17-3.
☑	d. Verify and document steel fabrication per DSA-approved construction documents.	Periodic	SI	Not applicable to cold-formed steel light-frame construction, except for trusses (**1705A.2.4**).
	S/A3. WELDING:			
	Test or Special Inspection	**Type**	**Performed By**	**Code References and Notes**
☑	a. Verify weld filler material identification markings per AWS designation listed on the DSA-approved documents and the WPS.	Periodic	SI	**1705A.2.5, Table 1705A.2.1 Items 4 & 5;** AWS D1.1 and AWS D1.8 for structural steel; AWS D1.2 for Aluminum; AWS D1.3 for cold-formed steel; AWS D1.4 for reinforcing steel; DSA IR 17-3.
☑	b. Verify weld filler material manufacturer's certificate of compliance.	Periodic	SI	DSA IR 17-3.
☑	c. Verify WPS, welder qualifications and equipment.	Periodic	SI	DSA IR 17-3.
	S/A4. SHOP WELDING (IN ADDITION TO SECTION S/A3):			
	Test or Special Inspection	**Type**	**Performed By**	**Code References and Notes**
☑	a. Inspect groove welds, multi-pass fillet welds, single pass fillet welds > 5/16", plug and slot welds.	Continuous	SI	**Table 1705A.2.1 Items 5a.1–4;** AISC 360-16 (and AISC 341-16 as applicable); DSA IR 17-3.
☑	b. Inspect single-pass fillet welds ≤ 5/16", floor and roof deck welds.	Periodic	SI	**1705A.2.2, Table 1705A.2.1 Items 5a.5 & 5a.6;** AISC 360-16 (and AISC 341-16 as applicable); DSA IR 17-3.
☑	c. Inspect welding of stairs and railing systems.	Periodic	SI	**1705A.2.1;** AISC 360-16 (and AISC 341-16 as applicable); AWS D1.1 & D1.3; DSA IR 17-3.
☐	d. Verification of reinforcing steel weldability other than ASTM A706.	Periodic	SI	**1705A.3.1;** AWS D1.4; DSA IR 17-3. Verify carbon equivalent reported on mill certificates.
☑	e. Inspect welding of reinforcing steel.	Continuous	SI	**Table 1705A.2.1 Item 5b, 1705A.3.1, Table 1705A.3 Item 2, 1903A.8;** AWS D1.4; DSA IR 17-3.
	S/A5. FIELD WELDING (IN ADDITION TO SECTION S/A3):			
	Test or Special Inspection	**Type**	**Performed By**	**Code References and Notes**
☑	b. Inspect single-pass fillet welds ≤ 5/16".	Periodic	SI	**Table 1705A.2.1 Item 5a.5;** AISC 360-16 (AISC 341-16 as applicable); DSA IR 17-3.
	Test or Special Inspection	**Type**	**Performed By**	**Code References and Notes**
	S/A6. NONDESTRUCTIVE TESTING:			
	Test or Special Inspection	**Type**	**Performed By**	**Code References and Notes**
☑	a. Ultrasonic	Test	LOR	**1705A.2.1, 1705A.2.5;** AISC 341-16 J6.2, AISC 360-16 N5.5; AWS D1.1, AWS D1.8; DSA IR 17-2.
☑	b. Magnetic Particle	Test	LOR	**1705A.2.1, 1705A.2.5;** AISC 341-16 J6.2, AISC 360-16 N5.5; AWS D1.1, AWS D1.8; DSA IR 17-2.

1. Structural Testing and Inspection: Laboratory Verified Report Form DSA 291
2. Concrete Batch Plant Inspection: Laboratory Verified Report Form DSA 291
3. Post-Installed Anchors: Laboratory Verified Report Form DSA 291, or, for independently contracting SI, Special Inspection Verified Report Form DSA 292
4. Shop Welding Inspection: Laboratory Verified Report Form DSA 291, or, for independently contracting SI, Special Inspection Verified Report Form DSA 292
5. Field Welding Inspection: Laboratory Verified Report Form DSA 291, or, for independently contracting SI, Special Inspection Verified Report Form DSA 292

NOTES:
THE EXAMPLE OF FORM DSA-103s SHOWN ON THIS SHEET ARE FOR ILLUSTRATION PURPOSE ONLY. A FORM DSA-103 IS TO BE COMPLETED FOR EACH APPLICATION THAT THIS PC BEING INCORPORATED INTO AND EXAMPLE FORM DSA-103s ARE TO BE CROSSED OUT ON THIS DRAWING.

IF THERE IS A GEOTECHNICAL REPORT, THE GEOTECH ENGINEER SHOULD DO THE INSPECTION INSTEAD OF PROJECT INSPECTOR (PI).

2 DSA-103 PLYWOOD FLOOR (CONCRETE FOUNDATION)

DSA 103-22: LISTING OF STRUCTURAL TESTS & SPECIAL INSPECTIONS, 2022 CBC

Application Number: 11-111111	**School Name:** 11	**School District:** 11
DSA File Number:	**Increment Number:**	**Date Created:** 2023-05-16 14:19:31

2022 CBC

IMPORTANT: This form is only a summary list of structural tests and some of the special inspections required for the project. Generally, the structural tests and special inspections noted on this form are those that will be performed by the Geotechnical Engineer of Record, Laboratory of Record, or Special Inspector. The actual complete test and inspection program must be performed as detailed on the DSA approved documents. The appendix at the bottom of this form identifies work NOT subject to DSA requirements for special inspection or structural testing. The project inspector is responsible for providing inspection of all facets of construction, including but not limited to, special inspections not listed on this form such as structural wood framing, high-load wood diaphragms, cold-formed steel framing, anchorage of non-structural components, etc., per Title 24, Part 2, Chapter 17A (2022 CBC).

****NOTE:** Undefined section and table references found in this document are from the CBC, or California Building Code.

KEY TO COLUMNS

1. TYPE	2. PERFORMED BY
Continuous – Indicates that a continuous special inspection is required	**GE (Geotechnical Engineer)** – Indicates that the special inspection shall be performed by a registered geotechnical engineer or his or her authorized representative.
Periodic – Indicates that a periodic special inspection is required	**LOR (Laboratory of Record)** – Indicates that the test or special inspection shall be performed by a testing laboratory accepted in the DSA Laboratory Evaluation and Acceptance (LEA) Program. See CAC Section 4-335.
Test – Indicates that a test is required	**PI (Project Inspector)** - Indicates that the special inspection may be performed by a project inspector when specifically approved by DSA.
	SI (Special Inspection) – Indicates that the special inspection shall be performed by an appropriately qualified/approved special inspector.

	S/A1. STRUCTURAL STEEL, COLD-FORMED STEEL AND ALUMINUM USED FOR STRUCTURAL PURPOSES			
	Test or Special Inspection	**Type**	**Performed By**	**Code References and Notes**
☑	a. Verify identification of all materials and: • Mill certificates indicate material properties that comply with requirements. • Material sizes, types and grades comply with requirements.	Periodic	*	**Table 1705A.2.1 Item 3a–3c.** 2202A.1; AISI S100-20 Section A3.1 & A3.2, AISI S240-20 Section A3 & A5, AISI S220-20 Sections A4 & A6. * By special inspector or qualified technician when performed off-site.
☑	b. Test unidentified materials	Test	LOR	**2202A.1.**
☑	c. Examine seam welds of HSS shapes	Periodic	SI	DSA IR 17-3.
☑	d. Verify and document steel fabrication per DSA-approved construction documents.	Periodic	SI	Not applicable to cold-formed steel light-frame construction, except for trusses (**1705A.2.4**).
	S/A3. WELDING:			
	Test or Special Inspection	**Type**	**Performed By**	**Code References and Notes**
☑	a. Verify weld filler material identification markings per AWS designation listed on the DSA-approved documents and the WPS.	Periodic	SI	**1705A.2.5, Table 1705A.2.1 Items 4 & 5;** AWS D1.1 and AWS D1.8 for structural steel; AWS D1.2 for Aluminum; AWS D1.3 for cold-formed steel; AWS D1.4 for reinforcing steel; DSA IR 17-3.
☑	b. Verify weld filler material manufacturer's certificate of compliance.	Periodic	SI	DSA IR 17-3.
☑	c. Verify WPS, welder qualifications and equipment.	Periodic	SI	DSA IR 17-3.
	S/A4. SHOP WELDING (IN ADDITION TO SECTION S/A3):			
	Test or Special Inspection	**Type**	**Performed By**	**Code References and Notes**
☑	a. Inspect groove welds, multi-pass fillet welds, single pass fillet welds > 5/16", plug and slot welds.	Continuous	SI	**Table 1705A.2.1 Items 5a.1–4;** AISC 360-16 (and AISC 341-16 as applicable); DSA IR 17-3.
☑	b. Inspect single-pass fillet welds ≤ 5/16", floor and roof deck welds.	Periodic	SI	**1705A.2.2, Table 1705A.2.1 Items 5a.5 & 5a.6;** AISC 360-16 (and AISC 341-16 as applicable); DSA IR 17-3.
☑	c. Inspect welding of stairs and railing systems.	Periodic	SI	**1705A.2.1;** AISC 360-16 (and AISC 341-16 as applicable); AWS D1.1 & D1.3; DSA IR 17-3.
	Test or Special Inspection	**Type**	**Performed By**	**Code References and Notes**
	S/A5. FIELD WELDING (IN ADDITION TO SECTION S/A3):			
	Test or Special Inspection	**Type**	**Performed By**	**Code References and Notes**
☐	a. Inspect groove welds, multi-pass fillet welds, single pass fillet welds > 5/16", plug and slot welds.	Continuous	SI	**Table 1705A.2.1 Items 5a.1–4;** AISC 360-16 (AISC 341-16 as applicable); DSA IR 17-3.
☑	b. Inspect single-pass fillet welds ≤ 5/16".	Periodic	SI	**Table 1705A.2.1 Item 5a.5;** AISC 360-16 (AISC 341-16 as applicable); DSA IR 17-3.
	Test or Special Inspection	**Type**	**Performed By**	**Code References and Notes**
	S/A6. NONDESTRUCTIVE TESTING:			
	Test or Special Inspection	**Type**	**Performed By**	**Code References and Notes**
☑	a. Ultrasonic	Test	LOR	**1705A.2.1, 1705A.2.5;** AISC 341-16 J6.2, AISC 360-16 N5.5; AWS D1.1, AWS D1.8; DSA IR 17-2.
☑	b. Magnetic Particle	Test	LOR	**1705A.2.1, 1705A.2.5;** AISC 341-16 J6.2, AISC 360-16 N5.5; AWS D1.1, AWS D1.8; DSA IR 17-2.

1. Structural Testing and Inspection: Laboratory Verified Report Form DSA 291
2. Shop Welding Inspection: Laboratory Verified Report Form DSA 291, or, for independently contracting SI, Special Inspection Verified Report Form DSA 292
3. Field Welding Inspection: Laboratory Verified Report Form DSA 291, or, for independently contracting SI, Special Inspection Verified Report Form DSA 292

NOTE:
THE EXAMPLE OF FORM DSA-103s SHOWN ON THIS SHEET ARE FOR ILLUSTRATION PURPOSE ONLY. A FORM DSA-103 IS TO BE COMPLETED FOR EACH APPLICATION THAT THIS PC BEING INCORPORATED INTO AND EXAMPLE FORM DSA-103s ARE TO BE CROSSED OUT ON THIS DRAWING.

1 DSA-103 PLYWOOD FLOOR (WOOD FOUNDATION)

PROJECT SPECIFIC STATE AGENCY APPROVAL

IDENTIFICATION STAMP
DIV. OF THE STATE ARCHITECT
APP: 02-123433 INC:
REVIEWED FOR
SS ☑ FLS ☑ ACS ☑
DATE: 01/20/2026

RS TAVARES ASSOCIATES
DESIGN • CONSULTING • PROJECT MGT
11590 W BERNARDO COURT, SUITE 100
SAN DIEGO, CA 92127
WWW.RSTAVARES.COM

PROFESSIONAL STAMP

REGISTERED PROFESSIONAL ENGINEER
MANNY D. FRANCISCO
No. 63380
Exp. 03/31/24
STRUCTURAL
STATE OF CALIFORNIA
RST#22088
02/16/24

THE PLANS, IDEAS & DESIGNS SHOWN ON THESE DRAWINGS ARE THE PROPERTY OF R&S TAVARES ASSOCIATES, INC. DEVISED SOLELY FOR THIS CONTRACT. THESE PLANS SHALL NOT BE USED, IN WHOLE OR IN PART, FOR ANY PURPOSE FOR WHICH THEY WERE NOT INTENDED WITHOUT THE EXPRESS WRITTEN CONSENT OF R&S TAVARES ASSOCIATES, INC. ©

CLIENT

Class Leasing
1651 Juanita Street, San Jacinto, CA 92583
Voice (951) 943-1908 Fax (951)943-5768

ORIGINAL PC STATE AGENCY APPROVAL

APPROVED
DIV. OF THE STATE ARCHITECT
APP: 04-123059 PC
REVIEWED FOR
SS ☑ FLS ☑ ACS ☑ CG ☑
DATE: 02/20/2024

Revision Schedule

#	Description	Date

PRE-CHECK (PC) DOCUMENT

Code: 2022 CBC

A separate project application for construction is required

PROJECT TITLE
PC 2022 CBC: 24' x 40' EXPANDABLE TO 120' x 40'

SHEET TITLE
DSA-103 T&I PLYWOOD FLOORS

PROJECT NUMBER 22088
DRAWN BY rMc/SC
CHECKED BY RH/RT
DATE
SHEET NO. A0.4
SHEET OF

6/15/2021 11:49:08 PM C:\Users\User\Documents\20093 - Aries, 24x40 PC - MainFile - Low Seismic_6_7_CES\AR24D63.rvt

UL U419 OR UL U465 (OR EQ) TO BE USED FOR INT. STC RATING. WOOD STUD MAY BE USED ILO OF MTL STUD (WHEN NON-RATED WALLS ARE BEING APPLIED "X" BOARD IS NOT REQUIRED -STC RATINGS STILL APPLY)

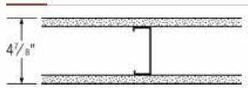

Fire Test	Fire Rating	STC	Thickness (in.)	
UL U419 or MEA 81-98-M Steel Stud (Non-loadbearing) Interior Partitions Sound Test: RAL-TL11-125	1 hr.	40	4-7/8"	• **Gypsum Board** - 5/8 in. thick gypsum board applied vertically or horizontally. - SHEETROCK Brand FIRECODE Core (Type X) • **Steel Studs** - 3-5/8 in. wide min. 25 gauge steel studs @ max 24 in. OC - **362S125-18** • **Gypsum Board** - 5/8 in. thick gypsum board applied vertically or horizontally. - SHEETROCK Brand FIRECODE Core (Type X) Visit U419

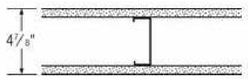

Fire Test	Fire Rating	STC	Thickness (in.)	
UL U465 Steel Stud (Non-loadbearing) Interior Partitions Sound Test: RAL-TL11-125	1 hr.	40	4-7/8"	• **Gypsum Board** - 5/8 in. thick board, applied vertically, attached to studs with 1 in. long, Type S -12 screws, spaced 8 in. OC along the edges and 12 in. OC of the board - SHEETROCK Brand FIRECODE Core (Type X) • **Steel Studs** - 3-5/8 in. wide min. 25 gauge steel. Attached to floor and ceiling with fasteners, 24 in. OC - **362S125-18** • **Gypsum Board** - 5/8 in. thick gypsum board applied vertically or horizontally. - SHEETROCK Brand FIRECODE Core (Type X) Visit U465

UL U457 (OR EQ) TO BE USED FOR EXT. STC RATING . WOOD STUD MAY BE USED ILO OF MTL STUD

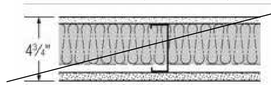

Fire Test	Fire Rating	STC	Thickness (in.)	
UL U457 Steel Stud (Non-loadbearing) Interior Partitions Sound Test: USG-840222	1 hr.	50	4-3/4"	• **Cement Board** - 1/2 thick board, square edge - DUROCK Brand Cement Board Next Gen • **Steel Studs** - 3-5/8 in. wide by 1-1/4 in. deep, min. 20 gauge steel, max 16 in. OC - **362S125-30** • **Batts and Blankets** - 3 in. mineral wool batt insulation • **Gypsum Board** - 5/8 in. thick gypsum board applied vertically - SHEETROCK Brand FIRECODE Core (Type X) Visit U457 U457

ACOUSTIC CONTROL- When the Pre-check building is site adapted, the building and site features need to comply with the CALGreen Code, Section 5.507.4 for the specific site location, and when PC building is place adjacent to another PC building, the adjoining wall section for interior sound transmission must meet the minimum requirement of a STC rating of 40 (per 2022 CALGreen Code, Section 507.4.3).

PROJECT SPECIFIC STATE AGENCY APPROVAL

IDENTIFICATION STAMP
DIV. OF THE STATE ARCHITECT
APP: 02-123433 INC:
REVIEWED FOR
SS ☑ FLS ☑ ACS ☑
DATE: 01/20/2026

R&S TAVARES ASSOCIATES
DESIGN ◆ CONSULTING ◆ PROJECT MGT
11590 W Bernardo Court, Suite 100
San Diego, CA 92127
www.rstavares.com

PROFESSIONAL STAMP

REGISTERED PROFESSIONAL ENGINEER
MANNY D. FRANCISCO
No. 63380
Exp. 03/31/24
STRUCTURAL
STATE OF CALIFORNIA
RST#22088
02/16/24

THE PLANS, IDEAS & DESIGNS SHOWN ON THESE DRAWINGS ARE THE PROPERTY OF R&S TAVARES ASSOCIATES, INC. DEVISED SOLELY FOR THIS CONTRACT. THESE PLANS SHALL NOT BE USED, IN WHOLE OR IN PART, FOR ANY PURPOSE FOR WHICH THEY WERE NOT INTENDED WITHOUT THE EXPRESS WRITTEN CONSENT OF R&S TAVARES ASSOCIATES, INC. ©

CLIENT

Class Leasing
1651Juanita Street, San Jacinto, CA 92583
Voice (951) 943-1908 Fax (951)943-5768

ORIGINAL PC STATE AGENCY APPROVAL

APPROVED
DIV. OF THE STATE ARCHITECT
APP: 04-123059 PC
REVIEWED FOR
SS ☑ FLS ☑ ACS ☑ CG ☑
DATE: 02/20/2024

Revision Schedule

#	Description	Date

PRE-CHECK (PC) DOCUMENT

Code: 2022 CBC

A separate project application for construction is required

PROJECT TITLE
PC 2022 CBC: 24' x 40' EXPANDABLE TO 120' x 40'

SHEET TITLE
CALGREEN SPEC'S

PROJECT NUMBER
22088

DRAWN BY
rMc/SC

CHECKED BY
RH/RT

DATE

SHEET NO.
A0.5

SHEET OF

6/15/2021 11:49:09 PM C:\Users\User\Documents\20093 - Aries, 24x40 PC - MainFile - Low Seismic_6.7_CESAR24D63.rvt

2022 CALIFORNIA GREEN BUILDING STANDARDS CODE
NONRESIDENTIAL MANDATORY MEASURES, SHEET 1 (January 2023)

Y = YES
N/A = NOT APPLICABLE
RESPON. PARTY = RESPONSIBLE PARTY (ie: ARCHITECT, ENGINEER, OWNER, CONTRACTOR, INSPECTOR ETC.)

CHAPTER 3
GREEN BUILDING
SECTION 301 GENERAL

301.1 SCOPE. Buildings shall be designed to include the green building measures specified as mandatory in the application checklists contained in this code. Voluntary green building measures are also included in the application checklists and may be included in the design and construction of structures covered by this code, but are not required unless adopted by a city, county, or city and county as specified in Section 101.7.

301.3 NONRESIDENTIAL ADDITIONS AND ALTERATIONS. [BSC-CG] The provisions of individual sections of Chapter 5 apply to newly constructed buildings, building additions of 1,000 square feet or greater, and/or building alterations with a permit valuation of $200,000 or above (for occupancies within the authority of California Building Standards Commission). Code sections relevant to additions and alterations shall only apply to the portions of the building being added or altered within the scope of the permitted work.

A code section will be designated by a banner to indicate where the code section only applies to newly constructed buildings [N] or to additions and/or alterations [A]. When the code section applies to both, no banner will be used.

301.3.1 Nonresidential additions and alterations that cause updates to plumbing fixtures only:

Note: On and after January 1, 2014, certain commercial real property, as defined in Civil Code Section 1101.3, shall have its noncompliant plumbing fixtures replaced with appropriate water-conserving plumbing fixtures under specific circumstances. See Civil Code Section 1101.1 *et seq.* for definitions, types of commercial real property affected, effective dates, circumstances necessitating replacement of noncompliant plumbing fixtures, and duties and responsibilities for ensuring compliance.

301.3.2 Waste Diversion. The requirements of Section 5.408 shall be required for additions and alterations whenever a permit is required for work.

301.4 PUBLIC SCHOOLS AND COMMUNITY COLLEGES. (see GBSC)
301.5 HEALTH FACILITIES. (see GBSC)

SECTION 302 MIXED OCCUPANCY BUILDINGS

302.1 MIXED OCCUPANCY BUILDINGS. In mixed occupancy buildings, each portion of a building shall comply with the specific green building measures applicable to each specific occupancy.

SECTION 303 PHASED PROJECTS

303.1 PHASED PROJECTS. For shell buildings and others constructed for future tenant improvements, only those code measures relevant to the building components and systems considered to be new construction (or newly constructed) shall apply.

303.1.1 Initial Tenant improvements. The provisions of this code shall apply only to the initial tenant improvements to a project. Subsequent tenant improvements shall comply with the scoping provisions in Section 301.3 non-residential additions and alterations.

ABBREVIATION DEFINITIONS:

HCD	Department of Housing and Community Development
BSC	California Building Standards Commission
DSA-SS	Division of the State Architect, Structural Safety
OSHPD	Office of Statewide Health Planning and Development
LR	Low Rise
HR	High Rise
AA	Additions and Alterations
N	New

CHAPTER 5
NONRESIDENTIAL MANDATORY MEASURES

DIVISION 5.1 PLANNING AND DESIGN

SECTION 5.101 GENERAL
5.101.1 SCOPE
The provisions of this chapter outline planning, design and development methods that include environmentally responsible site selection, building design, building siting and development to protect, restore and enhance the environmental quality of the site and respect the integrity of adjacent properties.

SECTION 5.102 DEFINITIONS
5.102.1 DEFINITIONS
The following terms are defined in Chapter 2 *(and are included here for reference)*

CUTOFF LUMINAIRES. Luminaires whose light distribution is such that the candela per 1000 lamp lumens does not numerically exceed 25 (2.5 percent) at an angle of 90 degrees above nadir, and 100 (10 percent) at a vertical angle of 80 degrees above nadir. This applies to all lateral angles around the luminaire.

LOW-EMITTING AND FUEL EFFICIENT VEHICLES.
Eligible vehicles are limited to the following:

1. Zero emission vehicle (ZEV), enhanced advanced technology PZEV (enhanced AT ZEV) or transitional zero emission vehicles (TZEV) regulated under CCR, Title 13, Section 1962.
2. High-efficiency vehicles, regulated by U.S. EPA, bearing a fuel economy and greenhouse gas rating od 9 oe 10 as regulated under 40 CFR Section 600 Subpart D.

NEIGHBORHOOD ELECTRIC VEHICLE (NEV). A motor vehicle that meets the definition of "low-speed vehicle" either in Section 385.5 of the Vehicle Code or in 49CFR571.500 (as it existed on July 1, 2000), and is certified to zero-emission vehicle standards.

TENANT-OCCUPANTS. Building occupants who inhabit a building during its normal hours of operation as permanent occupants, such as employees, as distinguished from customers and other transient visitors.

VANPOOL VEHICLE. Eligible vehicles are limited to any motor vehicle, other than a motortruck or truck tractor, designed for carrying more than 10 but not more than 15 persons including the driver, which is maintained and used primarily for the nonprofit work-related transportation of adults for the purpose of ridesharing.

Note: Source: Vehicle Code, Division 1, Section 668

ZEV. Any vehicle certified to zero-emission standards.

SECTION 5.106 SITE DEVELOPMENT
5.106.1 STORM WATER POLLUTION PREVENTION FOR PROJECTS THAT DISTURB LESS THAN ONE ACRE OF LAND. Newly constructed projects and additions which disturb less than one acre of land, and are not part of a larger common plan of development or sale, shall prevent the pollution of storm water runoff from the construction activities through one or more of the following measures:

5.106.1.1 Local ordinance. Comply with a lawfully enacted storm water management and/or erosion control ordinance.

5.106.1.2 Best Management Practices (BMPs). Prevent the loss of soil through wind or water erosion by implementing an effective combination of erosion and sediment control and good housekeeping BMPs.

1. Soil loss BMPs that should be considered for implementation as appropriate for each project include, but are not limited to, the following:
   a. Scheduling construction activity during dry weather, when possible.
   b. Preservation of natural features, vegetation, soil, and buffers around surface waters.
   c. Drainage swales or lined ditches to control stormwater flow.
   d. Mulching or hydroseeding to stabilize disturbed soils.
   e. Erosion control to protect slopes.
   f. Protection of storm drain inlets (gravel bags or catch basin inserts).
   g. Perimeter sediment control (perimeter silt fence, fiber rolls).
   h. Sediment trap or sediment basin to retain sediment on site.
   i. Stabilized construction exits.
   j. Wind erosion control.
   k. Other soil loss BMPs acceptable to the enforcing agency.
2. Good housekeeping BMPs to manage construction equipment, materials, non-stormwater discharges and wastes that should be considered for implementation as appropriate for each project include, but are not limited to, the following:
   a. Dewatering activities.
   b. Material handling and waste management.
   c. Building materials stockpile management.
   d. Management of washout areas (concrete, paints, stucco, etc.).
   e. Control of vehicle/equipment fueling to contractor's staging area.
   f. Vehicle and equipment cleaning performed off site.
   g. Spill prevention and control.
   h. Other housekeeping BMPs acceptable to the enforcing agency.

5.106.2 STORMWATER POLLUTION PREVENTION FOR PROJECTS THAT DISTURB ONE OR MORE ACRES OF LAND. Comply with all lawfully enacted stormwater discharge regulations for projects that (1) disturb one acre or more of land, or (2) disturb less than one acre of land but are part of a larger common plan of development sale.

Note: Projects that (1) disturb one acre or more of land, or (2) disturb less than one acre of land but are part of the larger common plan of development or sale must comply with the post-construction requirements detailed in the applicable National Pollutant Discharge Elimination System (NPDES) General permit for Stormwater Discharges Associated with Construction and Land Disturbance Activities issued by the State Water Resources Control Board or the Lahontan Regional Water Quality Control Board (for projects in the Lake Tahoe Hydrologic Unit).

The NPDES permits require postconstruction runoff (post-project hydrology) to match the preconstruction runoff (pre-project hydrology) with the installation of postconstruction stormwater management measures. The NPDES permits emphasize runoff reduction through on-site stormwater use, interception, evapotranspiration, and infiltration through nonstructural controls, such as Low Impact Development (LID) practices, and conversation design measures. Stormwater volume that cannot be addressed using nonstructural practices is required to be captured in structural practices and be approved by the enforcing agency.

Refer to the current applicable permits on the State Water Resources Control Board website at: www.waterboards.ca.gov/constructionstormwater. Consideration to the stormwater runoff management measures should be given during the initial design process for appropriate integration into site development.

5.106.4 BICYCLE PARKING. For buildings within the authority of California Building Standards Commission as specified in Section 103, comply with Section 5.106.4.1. For buildings within the authority of the Division of the State Architect pursuant to Section 105, comply with Section 5.106.4.2

5.106.4.1 Bicycle parking. [BSC-CG] Comply with Sections 5.106.4.1.1 and 5.106.4.1.2; or meet the applicable local ordinance, whichever is stricter.

5.106.4.1.1 Short-term bicycle parking. If the new project or an addition or alteration is anticipated to generate visitor traffic, provide permanently anchored bicycle racks within 200 feet of the visitors' entrance, readily visible to passers-by, for 5% of new visitor motorized vehicle parking spaces being added, with a minimum of one two-bike capacity rack.
Exception: Additions or alterations which add nine or less visitor vehicular parking spaces.

5.106.4.1.2 Long-term bicycle parking. For new buildings with tenant spaces that have 10 or more tenant-occupants, provide secure bicycle parking for 5 percent of the tenant-occupant vehicular parking spaces with a minimum of one bicycle parking facility.

5.106.4.1.3 For additions or alterations that add 10 or more tenant-occupant vehicular parking spaces, provide secure bicycle parking for 5 percent of the tenant vehicular parking spaces being added, with a minimum of one bicycle parking facility.

5.106.4.1.4 For new shell buildings in phased projects provide secure bicycle parking for 5 percent of the anticipated tenant-occupant vehicular parking spaces with a minimum of one bicycle parking facility.

5.106.4.1.5 Acceptable bicycle parking facility for Sections 5.106.4.1.2, 5.106.4.1.3, and 5.106.4.1.4 shall be convenient from the street and shall meet one of the following:

1. Covered, lockable enclosures with permanently anchored racks for bicycles;
2. Lockable bicycle rooms with permanently anchored racks; or
3. Lockable, permanently anchored bicycle lockers.

Note: Additional information on recommended bicycle accommodations may be obtained from Sacramento Area Bicycle Advocates.

5.106.4.2 Bicycle parking. [DSA-SS] For public schools and community colleges, comply with Sections 5.106.4.2.1 and 5.106.4.2.2

5.106.4.2.1 Student bicycle parking. Provide permanently anchored bicycle racks conveniently accessed with a minimum of four two-bike capacity racks per new building.
5.106.4.2.2 Staff bicycle parking. Provide permanent, secure bicycle parking conveniently accessed with a minimum of two staff bicycle parking spaces per new building. Acceptable bicycle parking facilities shall be convenient from the street or staff parking area and shall meet one of the following:

1. Covered, lockable enclosures with permanently anchored racks for bicycles;
2. Lockable bicycle rooms with permanently anchored racks; or
3. Lockable, permanently anchored bicycle lockers.

5.106.5.3 Electric vehicle (EV) charging. [N] Construction to provide electric vehicle infrastructure and facilitate electric vehicle charging shall comply with Section 5.106.5.3.1 and shall be provided in accordance with regulations in the California Building Code and the California Electrical Code.

Exceptions:
1. On a case-by-case basis where the local enforcing agency has determined compliance with this section is not feasible based upon one of the following conditions:
   a. Where there is no local utility power supply
   b. Where the local utility is unable to supply adequate power.
   c. Where there is evidence suitable to the local enforcement agency substantiating the local utility infrastructure design requirements, directly related to the implementation of Section 5.106.5.3, may adversely impact the construction cost of the project.
2. Parking spaces accessible only by automated mechanical car parking systems are not required to comply with this code section

5.106.5.3.1 EV capable spaces.
[N] EV capable spaces shall be provided in accordance with Table 5.106.5.3.1 and the following requirements:
1. Raceways complying with the California Electrical Code and no less that 1-inch (25 mm) diameter shall be provided and shall originate at a service panel or a subpanel(s) serving the area, and shall terminate in close proximity to the proposed location of the EV capable and into a suitable listed cabinet, box,enclosure or equivalent. A common raceway may be used to serve multiple EV charging spaces.
2. A service panel or subpanel (s) shall be provided with panel space and electrical load capacity for a dedicated 208/240 volt, 40-ampere minimum branch circuit for each EV capable space, with delivery of 30-ampere minimum to an installed EVSE at each EVCS.
3. The electrical system and any on-site distribution transformers shall have sufficient capacity to supply full rated amperage at each EV capable space.
4. The service panel or subpanel circuit directory shall identify the reserved overcurrent protective devices space(s) as "EV CAPABLE". The raceway termination location shall be permanently and visibly marked as "EV CAPABLE."

Note: A parking space served by electric vehicle supply equipment or designed as a future EV charging space shall count as at least one standard automobile parking space only for the purpose of complying with any applicable minimum parking space requirements established by an enforcement agency. See vehicle Code Section 22511.2 for further details.

TABLE 5.106.5.3.1

TOTAL NUMBER OF ACTUAL PARKING SPACES	NUMBER OF REQUIRED EV CAPABLE SPACES	NUMBER OF EVCS (EV CAPABLE SPACES PROVIDED WITH EVSE)^2
0-9	0	0
10-25	2	0
26-50	8	2
51-75	13	3
76-100	17	4
101-150	25	6
151-200	35	9
201 AND OVER	20% of total[1]	25% of EV capable spaces[1]

1. Where there is insufficient electrical supply.
2. The number of required EVCS (EV capable spaces provided with EVSE) in column 3 count towards the total number of required EV capable spaces shown in column 2.

5.106.5.3.2 Electric vehicle charging stations (EVCS)
EV capable spaces shall be provided with EVSE to create EVCS in the number indicated in Table 5.106.5.3.1. The EVCS required by Table 5.106.5.3.1 may be provided with EVSE in any combination of Level 2 and Direct Current Fast Charging (DCFC), except that at least one Level 2 EVSE shall be provided.

One EV charger with multiple connectors capable of charging multiple EVs simultaneously shall be permitted if the electrical load capacity required by Section 5.106.5.3.1 for each EV capable space is accumulatively supplied to the EV charger.

The installation of each DCFC EVSE shall be permitted to reduce the minimum number of required EV capable spaces without EVSE by five and reduce proportionally the required electrical load capacity to the service panel or subpanel.

5.106.5.3.3 Use of automatic load management systems (ALMS).
ALMS shall be permitted for EVCS. When ALMS is installed, the required electrical load capacity specified in Section
5.106.5.3.1 for each EVCS may be reduced when serviced by an EVSE controlled by an ALMS. Each EVSE controlled by an ALMS shall deliver a minimum 30 amperes to an EV when charging one vehicle and shall deliver a minimum 3.3 kW while simultaneously charging multiple EVs.

5.106.5.3.4 Accessible EVCS.
When EVSE is installed, accessible EVSC shall be provided in accordance with the *California Building Code*, Chapter 11B, Section 11B-228.3.
Note: For EVCS signs, refer to Caltrans Traffic Operations Policy Directive 13-01 (Zero Emission Vehicle Signs and Pavement Markings) or its successor(s).

5.106.5.4 Electric Vehicle (EV) charging: medium-duty and heavy-duty. [N]
Construction shall comply with section 5.106.5.4.1 to facilitate future installation of electric vehicle supply equipment (EVSE). Construction for warehouses, grocery stores and retail stores with planned off-street loading spaces shall also comply with Section 5.106.5.4.1 for future installation of medium- and heavy-duty EVSE.
Exceptions:
1. On a case-by-case basis where the local enforcing agency has determined compliance with this section is not feasible based upon one of the following conditions:
   a. Where there is no local utility power supply.
   b. Where the local utility is unable to supply adequate power.
   c. Where there is evidence suitable to the local enforcing agency substantiating that additional local utility infrastructure design requirements, directly related to the implementation of Section 5.106.5.3, may adversely impact the construction cost of the project.

When EVSE(s) is/are installed, it shall be in accordance with the *California Building Code*, the *California Electrical Code* and as follows:

5.106.5.4.1 Electric vehicle charging readiness requirements for warehouse, grocery stores and retail stores with planned off-street loading spaces.
[N] In order to avoid future demolition when adding EV charging supply and distribution equipment, spare raceways(s) or busway(s) and adequate capacity for transformers(s), service panels(s) or subpanel(s) shall be installed at the time of construction in accordance with the California Electrical Code. Construction plans and specifications shall include but are not limited to, the following:
1. The transformer, main service equipment and subpanel shall meet the minimum power requirement in Table 5.106.5.4.1 to accommodate the dedicated branch circuits for the future installation of EVSE.
2. The construction documents shall indicate on or more location(s) convenient to the planned offstreet loading space(s) reserved for medium-and heavy-duty ZEV charging cabinets and charging dispensers, and a pathway reserved for routing of conduit from the termination of the raceway(s) or busway(s) to the charging cabinet(s) and dispenser(s) as shown in Table 5.106.5.4.1
3. Raceway(s) or busway(s) originating at a main service panel or a subpanel(s) serving the area where potential future medium-and heavy-duty EVSE will be located and shall terminate in close proximity to the potential future location of the charging equipments for medium- and heavy-duty vehicles.
4. The raceway(s) or busway(s) shall be sufficient size to carry the minimum additional system load to the future location of the charging for medium- and heavy-duty ZEVs as shown in Table 5.106.5.4.1.

TABLE 5.106.5.4.1 RACEWAY CONDUIT AND PANEL POWER REQUIREMENTS FOR MEDIUM- AND HEAVY-DUTY EVSE [N]

BUILDING TYPE	BUILDING SIZE (SQ. FT.)	NUMBER OF OFF-STREET LOADING SPACES	ADDITIONAL CAPACITY REQUIRED (KVA) FOR RACEWAY & BUSWAY AND TRANSFORMER & PANEL
Grocery	10,000 to 90,000	1 or 2	200
		3 or Greater	400
	Greater than 90,000	1 or Greater	400
Retail	10,000 to 135,000	1 or 2	200
		3 or Greater	400
	Greater than 135,000	1 or Greater	400
Warehouse	20,000 to 256,000	1 or 2	200
		3 or Greater	400
	Greater than 256,000	1 or Greater	400

5.106.8 LIGHT POLLUTION REDUCTION. [N]. I Outdoor lighting systems shall be designed and installed to comply with the following:

1. The minimum requirements in the California Energy Code for Lighting Zones 0-4 as defined in Chapter 10, Section 10-114 of the California Administrative Code; and
2. Backlight (B) ratings as defined in IES TM-15-11 (shown in Table A-1 in Chapter 8);
3. Uplight and Glare ratings as defined in California Energy Code (shown in Tables 130.2-A and 130.2-B in Chapter 8) and
4. Allowable BUG ratings not exceeding those shown in Table 5.106.8, [N] or Comply with a local ordinance lawfully enacted pursuant to Section 101.7, whichever is more stringent.

Exceptions: [N]

1. Luminaires that qualify as exceptions in Sections 130.2 (b) and 140.7 of the California Energy Code.
2. Emergency lighting.
3. Building facade meeting the requirements in Table 140.7-B of the California Energy Code, Part 6.
4. Custom lighting features as allowed by the local enforcing agency, as permitted by Section 101.8 Alternate materials, designs and methods of construction.
5. Luminaires with less than 6,200 initial luminaire lumens.

TABLE 5.106.8 [N] MAXIMUM ALLOWABLE BACKLIGHT, UPLIGHT AND GLARE (BUG) RATINGS [1,2]

ALLOWABLE RATING	LIGHTING ZONE LZ0	LIGHTING ZONE LZ1	LIGHTING ZONE LZ2	LIGHTING ZONE LZ3	LIGHTING ZONE LZ4
MAXIMUM ALLOWABLE BACKLIGHT RATING [3]					
Luminaire greater than 2 mounting heights (MH) from property line	N/A	No Limit	No Limit	No Limit	No Limit
Luminaire back hemisphere is 1-2 MH from property line	N/A	B2	B3	B4	B4
Luminaire back hemisphere is 0.5-1 MH from property line	N/A	B1	B2	B3	B3
Luminaire back hemisphere is less than 0.5 MH from property line	N/A	B0	B0	B1	B2
MAXIMUM ALLOWABLE UPLIGHT RATING (U)					
For area lighting [3]	N/A	U0	U0	U0	U0
For all other outdoor lighting,including decorative luminaires	N/A	U1	U2	U3	UR
MAXIMUM ALLOWABLE GLARE RATING [3] **(G)**					
MAXIMUM ALLOWABLE GLARE RATING [3] **(G)**	N/A	G1	G2	G3	G4
MAXIMUM ALLOWABLE GLARE RATING [3] **(G)**	N/A	G0	G1	G1	G2
MAXIMUM ALLOWABLE GLARE RATING [3] **(G)**	N/A	G0	G0	G1	G1
MAXIMUM ALLOWABLE GLARE RATING [3] **(G)**	N/A	G0	G0	G0	G1

1. IESNA Lighting Zones 0 and 5 are not applicable; refer to Lighting Zones as defined in the *California Energy Code* and Chapter 10 of the *California Administrative Code*.

2. For property lines that abut public walkways, bikeways, plazas and parking lots, the property line may be considered to be 5 feet beyond the actual property line for purpose of determining compliance with this section. For property lines that abut public roadways and public transit corridors, the property line may be considered to be the centerline of the public roadway or public transit corridor for the purpose of determining compliance with this section.

3. General lighting luminaires in areas such as outdoor parking, sales or storage lots shall meet these reduced ratings. Decorative luminaries located in these areas shall meet *U*-value limits for "all other outdoor lighting"

5.106.8.1 Facing- Backlight
Luminaries within 2MH of a property line shall be oriented so that the nearest property line is behind the fixture, and shall comply with the backlight rating specified in Table 5.106.8 based on the lighting zone and distance to the nearest point of that property line.
Exception: Corners. If two property lines (or two segments of the same property line) have equidistant point to the luminaire, then the luminaire may be oriented so that the intersection of the two lines (the corner) is directly behind the luminaire. The luminaire shall still use the distance to the nearest points(s) on the property lines to determine the required backlight rating.

5.106.8.2 Facing-Glare.
For luminaires covered by 5.106.8.1, if a property line also exists within or extends into the front hemisphere within 2MH of the luminaire then the luminaire shall comply with the more stringent glare rating specified in Table 5.106.8 based on the lighting zone and distance to the nearest point on the nearest property line within the front hemisphere.

Note: [N]
1.See also *California Building Code*, Chapter 12, Section 1205.6 for college campus lighting requirements for parking facilities and walkways.
2.Refer to Chapter 8 (Compliance Forms, Worksheets and Reference Material) for IES TM-15-11 Table A-1, *California Energy Code* Tables 130.2-A and 130.2-B.
3. Refer to the *California Building Code* for requirements for additions and alterations.

5.106.10 GRADING AND PAVING. Construction plans shall indicate how site grading or a drainage system will manage all surface water flows to keep water from entering buildings. Examples of methods to manage surface water include, but are not limited to, the following:

1. Swales.
2. Water collection and disposal systems.
3. French drains.
4. Water retention gardens.
5. Other water measures which keep surface water away from buildings and aid in groundwater recharge.
   Exception: Additions and alterations not altering the drainage path.

5.106.12 SHADE TREES [DSA-SS]. Shade Trees shall be planted to comply with Sections 5.106.12.1, 5.106.12.2, and 5.106.12.3. Percentages shown shall be measured at noon on the summer solstice. Landscape irrigation necessary to establish and maintain tree health shall comply with Section 5.304.6.

5.106.12.1 Surface parking areas. Shade tree plantings, minimum #10 container size or equal, shall be installed to provide shade over 50 percent of the parking area within 15 years.

Exceptions: Surface parking area covered by solar photovoltaic shade structures with roofing materials that comply with Table A5.106.11.2.2 in Appendix A5 shall be permitted in whole or in part in lieu of shade tree planting.

5.106.12.2 Landscape areas. Shade tress plantings, minimum #10 container size or equal shall be installed to provide shade of 20% of the landscape area within 15 years.

Exceptions: Playfields for organized sport activity are not included in the total area calculation.

5.106.12.3. Hardscape areas. Shade tree plantings, minimum #10 container size or equal shall be installed to provide shade over 20 percent of the hardscape area within 15 years.

Exceptions:
1. Walks, hardscape areas covered by solar photovoltaic shade structures or shade structures with roofing materials that comply with Table A5.106.11.2.2 in Appendix A5 shall be permitted in whole or in part in lieu of shade tree planting.
2. Designated and marked play areas of organized sport activity are not included in the total area calculation.

DIVISION 5.2 ENERGY EFFICIENCY

SECTION 5.201 GENERAL
5.201.1 Scope [BSC-CG]. *California Energy Code [DSA-SS].* For the purposes of mandatory energy efficiency standards in this code, the California Energy Commission will continue to adopt mandatory building standards.

DIVISION 5.3 WATER EFFICIENCY AND CONSERVATION

SECTION 5.301 GENERAL
5.301.1 Scope. The provisions of this chapter shall establish the means of conserving water use indoors, outdoors and in wastewater conveyance.

SECTION 5.302 DEFINITIONS
5.302.1 Definitions. The following terms are defined in Chapter 2 *(and are included here for reference)*

EVAPOTRANSPIRATION ADJUSTMENT FACTOR (ETAF) [DSA-SS]. An adjustment factor when applied to reference evapotranspiration that adjusts for plant factors and irrigation efficiency, which ae two major influences on the amount of water that needs to be applied to the landscape.

FOOTPRINT AREA [DSA-SS]. The total area of the furthest exterior wall of the structure projected to natural grade, not including exterior areas such as stairs, covered walkways, patios and decks.

METERING FAUCET. A self-closing faucet that dispenses a specific volume of water for each actuation cycle. The volume or cycle duration can be fixed or adjustable.

GRAYWATER. Pursuant to Health and Safety Code Section 17922.12, "graywater" means untreated wastewater that has not been contaminated by any toilet discharge, has not been affected by infectious, contaminated, or unhealthy bodily wastes, and does not present a threat from contamination by unhealthful processing, manufacturing, or operating wastes. "Graywater" includes, but is not limited to wastewater from bathtubs, showers, bathroom washbasins, clothes washing machines and laundry tubs, but does not include waste water from kitchen sinks or dishwashers.

MODEL WATER EFFICIENT LANDSCAPE ORDINANCE (MWELO). The California ordinance regulating landscape design, installation and maintenance practices that will ensure commercial, multifamily and other developer installed landscapes greater than 2500 square feet meet an irrigation water budget developed based on landscaped area and climatological parameters.

MODEL WATER EFFICIENT LANDSCAPE ORDINANCE (MWELO). [HCD] The California model ordinance (California Code of Regulations, Title 23, Division 2, Chapter 2.7), regulating landscape design, installation and maintenance practices. Local agencies are required to adopt the updated MWELO, or adopt a local ordinance at least as effective as the MWELO.

POTABLE WATER. Water that is drinkable and meets the U.S. Environmental Protection Agency (EPA) Drinking Water Standards. See definition in the California Plumbing Code, Part 5.

POTABLE WATER. [HCD] Water that is satisfactory for drinking, culinary, and domestic purposes, and meets the U.S. Environmental Protection Agency (EPA) Drinking Water Standards and the requirements of the Health Authority Having Jurisdiction.

RECYCLED WATER. Water which, as a result of treatment of waste, is suitable for a direct beneficial use or a controlled use that would not otherwise occur [Water Code Section 13050 (n)]. Simply put, recycled water is water treated to remove waste matter attaining a quality that is suitable to use the water again.

SUBMETER. [HCD 1] A secondary device beyond a meter that measures water consumption of an individual rental unit within a multiunit residential structure or mixed-use residential and commercial structure. (See Civic Code Section 1954.202 (g) and Water code Section 517 for additional details.)

WATER BUDGET. Is the estimated total landscape irrigation water use which shall not exceed the maximum applied water allowance calculated in accordance with the Department of Water Resources Model Efficient Landscape Ordinance (MWELO).

DISCLAIMER: *THIS DOCUMENT IS PROVIDED AND INTENDED TO BE USED AS A MEANS TO INDICATE AREAS OF COMPLIANCE WITH THE CALIFORNIA GREEN BUILDING STANDARDS (CALGREEN) CODE. DUE TO THE VARIABLES BETWEEN BUILDING DEPARTMENT JURISDICTIONS, THIS CHECKLIST IS TO BE USED ON AN INDIVIDUAL PROJECT BASIS AND MAY BE MODIFIED BY THE END USER TO MEET THOSE INDIVIDUAL NEEDS. THE END USER ASSUMES ALL RESPONSIBILITY ASSOCIATED WITH THE USE OF THIS DOCUMENT, INCLUDING VERIFICATION WITH THE FULL CODE.*

6/15/2021 11:49:10 PM C:\Users\User\Documents\20093 - Aries, 24x40 PC - MainFile - Low Seismic_6.7_CES\R24D63.rvt

PROJECT SPECIFIC STATE AGENCY APPROVAL
IDENTIFICATION STAMP
DIV. OF THE STATE ARCHITECT
APP: 02-123433 INC:
REVIEWED FOR
SS ☑ FLS ☑ ACS ☑
DATE: 01/20/2026

R&S TAVARES ASSOCIATES
DESIGN ● CONSULTING ● PROJECT MGT
11590 W BERNARDO COURT, SUITE 100
SAN DIEGO, CA 92127
WWW.RSTAVARES.COM

PROFESSIONAL STAMP
REGISTERED PROFESSIONAL ENGINEER JANNY D. FRANCISCO NO. E-13380 EXP. 03/31/24 CIVIL STRUCTURAL STATE OF CALIFORNIA
RST#22088
02/16/24

THE PLANS, IDEAS & DESIGNS SHOWN ON THESE DRAWINGS ARE THE PROPERTY OF R&S TAVARES ASSOCIATES, INC. DEVISED SOLELY FOR THIS CONTRACT. THESE PLANS SHALL NOT BE USED, IN WHOLE OR IN PART, FOR ANY PURPOSE FOR WHICH THEY WERE NOT INTENDED WITHOUT THE EXPRESS WRITTEN CONSENT OF R&S TAVARES ASSOCIATES, INC. ©

CLIENT
Class Leasing
1651Juanita Street, San Jacinto, CA 92583
Voice (951) 943-1908 Fax (951)943-5768

ORIGINAL PC STATE AGENCY APPROVAL
APPROVED
DIV. OF THE STATE ARCHITECT
APP: 04-123059 PC
REVIEWED FOR
SS ☑ FLS ☑ ACS ☑ CG ☑
DATE: 02/20/2024

Revision Schedule

#	Description	Date

PRE-CHECK (PC) DOCUMENT
Code: 2022 CBC
A separate project application for construction is required

PROJECT TITLE
PC 2022 CBC: 24' x 40' EXPANDABLE TO 120' x 40'

SHEET TITLE
CAL GREEN CHECKLIST

PROJECT NUMBER 22088
DRAWN BY rMc/SC
CHECKED BY RH/RT
DATE
SHEET NO. A0.6
SHEET OF

2022 CALIFORNIA GREEN BUILDING STANDARDS CODE
NONRESIDENTIAL MANDATORY MEASURES, SHEET 2 (January 2023)

Y = YES
N/A = NOT APPLICABLE
RESPON. PARTY = RESPONSIBLE PARTY (ie: ARCHITECT, ENGINEER, OWNER, CONTRACTOR, INSPECTOR ETC.)

SECTION 5.303 INDOOR WATER USE

5.303.1 METERS. Separate submeters or metering devices shall be installed for the uses described in Sections 503.1.1 and 503.1.2.

5.303.1.1 Buildings in excess of 50,000 square feet. Separate submeters shall be installed as follows:

1. For each individual leased, rented or other tenant space within the building projected to consume more than 100 gal/day (380 L/day), including, but not limited to, spaces used for laundry or cleaners, restaurant or food service, medical or dental office, laboratory, or beauty salon or barber shop.
2. Where separate submeters for individual building tenants are unfeasible, for water supplied to the following subsystems:
   a. Makeup water for cooling towers where flow through is greater than 500 gpm (30 L/s).
   b. Makeup water for evaporative coolers greater than 6 gpm (0.04 L/s).
   c. Steam and hot water boilers with energy input more than 500,000 Btu/h (147 kW).

5.303.1.2 Excess consumption. A separate submeter or metering device shall be provided for any tenant within a new building or within an addition that is projected to consume more than 1,000 gal/day.

5.303.3 WATER CONSERVING PLUMBING FIXTURES AND FITTINGS. Plumbing fixtures (water closets and urinals) and fittings (faucets and showerheads) shall comply with the following:

5.303.3.1 Water Closets. The effective flush volume of all water closets shall not exceed 1.28 gallons per flush. Tank-type water closets shall be certified to the performance criteria of the U.S. EPA WaterSense Specification for Tank-Type toilets.

Note: The effective flush volume of dual flush toilets is defined as the composite, average flush volume of two reduced flushes and one full flush.

5.303.3.2 Urinals.
5.303.3.2.1 Wall-mounted Urinals. The effective flush volume of wall-mounted urinals shall not exceed 0.125 gallons per flush.

5.303.3.2.2 Floor-mounted Urinals. The effective flush volume of floor-mounted or other urinals shall not exceed 0.5 gallons per flush.

5.303.3.3 Showerheads. [BSC-CG]
5.303.3.3.1 Single showerhead. Showerheads shall have a maximum flow rate of not more than 1.8 gallons per minute at 80 psi. Showerheads shall be certified to the performance criteria of the U.S. EPA WaterSense Specification for Showerheads.

5.303.3.3.2 Multiple showerheads serving one shower. When a shower is served by more than one showerhead, the combined flow rate of all the showerheads and/or other shower outlets controlled by a single valve shall not exceed 1.8 gallons per minute at 80 psi, or the shower shall be designed to allow only one shower outlet to be in operation at a time.
Note: A hand-held shower shall be considered a showerhead.

5.303.3.4 Faucets and fountains.

5.303.3.4.1 Nonresidential Lavatory faucets. Lavatory faucets shall have a maximum flow rate of not more than 0.5 gallons per minute at 60 psi.

5.303.3.4.2 Kitchen faucets. Kitchen faucets shall have a maximum flow rate of not more than 1.8 gallons per minute at 60 psi. Kitchen faucets may temporarily increase the flow above the maximum rate, but not to exceed 2.2 gallons per minute at 60 psi, and must default to a maximum flow rate of 1.8 gallons per minute at 60 psi.

5.303.3.4.3 Wash fountains. Wash fountains shall have a maximum flow rate of not more than1.8 gallons per minute/20 [rim space (inches) at 60 psi].

5.303.3.4.4 Metering faucets. Metering faucets shall not deliver more than 0.20 gallons per cycle.

5.303.3.4.5 Metering faucets for wash fountains. Metering faucets for wash fountains shall have a maximum flow rate of not more than 0.20 gallons per minute/20 [rim space (inches) at 60 psi].

Note: Where complying faucets are unavailable, aerators or other means may be used to achieve reduction.

5.303.3.4.6 Pre-rinse spray value
When installed, shall meet the requirements in the *California Code of Regulations*, Title 20 (Appliance Efficiency Regulations), Section 1605.1 (h)(4) Table H-2, Section 1605.3 (h)(4)(A), and Section 1607 (d)(7), and shall be equipped with an integral automatic shutoff.

FOR REFERENCE ONLY: The following table and code section have been reprinted from the *California Code of Regulations*, Title 20 (Appliance Efficiency Regulations), Section 1605.1 (h)(4) and Section 1605.3 (h)(4)(A).

TABLE H-2

STANDARDS FOR COMMERCIAL PRE-RINSE SPRAY VALUES MANUFACTURED ON OR AFTER JANUARY 28, 2019

PRODUCT CLASS [spray force in ounce force (ozf)]	MAXIMUM FLOW RATE (gpm)
Product Class 1 (≤ 5.0 ozf)	1.00
Product Class 2 (> 5.0 ozf and ≤ 8.0 ozf)	1.20
Product Class 3 (> 8.0 ozf)	1.28

5.303.4 COMMERCIAL KITCHEN EQUIPMENT.

5.303.4.1 Food Waste Disposers. Disposers shall either modulate the use of water to no more than 1 gpm when the disposer is not in use (not actively grinding food waste/no-load) or shall automatically shut off after no more than 10 minutes of inactivity. Disposers shall use no more than 8 gpm of water.
Note: This code section does not affect local jurisdiction authority to prohibit or require disposer installation.

5.303.5 AREAS OF ADDITION OR ALTERATION. For those occupancies within the authority of the California Building Standards Commission as specified in Section 103, the provisions of Section 5.303.3 and 5.303.4 shall apply to new fixtures in additions or areas of alteration to the building.

5.303.6 STANDARDS FOR PLUMBING FIXTURES AND FITTINGS. Plumbing fixtures and fittings shall be installed in accordance with the *California Plumbing Code*, and shall meet the applicable standards referenced in Table 1701.1 of the *California Plumbing Code* and in Chapter 6 of this code.

SECTION 5.304 OUTDOOR WATER USE

5.304.1 OUTDOOR POTABLE WATER USE IN LANDSCAPE AREAS. Nonresidential developments shall comply with a local water efficient landscape ordinance or the current California Department of Water Resources' Model Water Efficient Landscape Ordinance (MWELO), whichever is more stringent.

Notes:
1. The Model Water Efficient Landscape Ordinance (MWELO) is located in the California Code of Regulations, Title 23, Chapter 2.7, Division 2.
2. MWELO and supporting documents, including a water budget calculator, are available at: https://www.water.ca.gov/.

5.304.6 OUTDOOR POTABLE WATER USE IN LANDSCAPE AREAS. For public schools and community colleges, landscape projects as described in Sections 5.304.6.1 and 5.304.6.2 shall comply with the California Department of Water Resources Model Water Efficient Landscape Ordinance (MWELO) commencing with Section 490 of Chapter 2.7, Division 2, Title 23, *California Code of Regulations*, except that the evapotranspiration adjustment factor (ETAF) shall be 0.65 with an additional water allowance for special landscape areas (SLA) of 0.35.

Exception: Any project with an aggregate landscape area of 2,500 square feet or less may comply with the prescriptive measures contained in Appendix D of the MWELO.

5.304.6.1 Newly constructed landscapes. New construction projects with an aggregate landscape area equal to or greater than 500 square feet.

5.304.6.2 Rehabilitated landscapes. Rehabilitated landscape projects with an aggregate landscape area equal to or greater than 1,200 square feet.

DIVISION 5.4 MATERIAL CONSERVATION AND RESOURCE EFFICIENCY

SECTION 5.401 GENERAL

5.401.1 SCOPE. The provisions of this chapter shall outline means of achieving material conservation and resource efficiency through protection of buildings from exterior moisture, construction waste diversion, employment of techniques to reduce pollution through recycling of materials, and building commissioning or testing and adjusting.

SECTION 5.402 DEFINITIONS

5.402.1 DEFINITIONS. The following terms are defined in Chapter 2 *(and are included here for reference)*

ADJUST. To regulate fluid flow rate and air patterns at the terminal equipment, such as to reduce fan speed or adjust a damper.

BALANCE. To proportion flows within the distribution system, including sub-mains, branches and terminals, according to design quantities.

BUILDING COMMISSIONING. A systematic quality assurance process that spans the entire design and construction process, including verifying and documenting that building systems and components are planned, designed, installed, tested, operated and maintained to meet the owner's project requirements.

ORGANIC WASTE. Food waste, green waste, landscape and pruning wste, nonhazardous wood waste, and food soiled paper waste that is mixed in with food waste.

TEST. A procedure to determine quantitative performance of a system or equipment

SECTION 5.407 WATER RESISTANCE AND MOISTURE MANAGEMENT

5.407.1 WEATHER PROTECTION. Provide a weather-resistant exterior wall and foundation envelope as required by California Building Code Section 1402.2 (Weather Protection), manufacturer's installation instructions or local ordinance, whichever is more stringent.

5.407.2 MOISTURE CONTROL. Employ moisture control measures by the following methods.

5.407.2.1 Sprinklers. Design and maintain landscape irrigation systems to prevent spray on structures.

5.407.2.2 Entries and openings. Design exterior entries and/or openings subject to foot traffic or wind-driven rain to prevent water intrusion into buildings as follows:

5.407.2.2.1 Exterior door protection. Primary exterior entries shall be covered to prevent water intrusion by using nonabsorbent floor and wall finishes within at least 2 feet around and perpendicular to such openings plus at least one of the following:

1. An installed awning at least 4 feet in depth.
2. The door is protected by a roof overhang at least 4 feet in depth.
3. The door is recessed at least 4 feet.
4. Other methods which provide equivalent protection.

5.407.2.2.2 Flashing. Install flashings integrated with a drainage plane.

SECTION 5.408 CONSTRUCTION WASTE REDUCTION, DISPOSAL AND RECYCLING

5.408.1 CONSTRUCTION WASTE MANAGEMENT. Recycle and/or salvage for reuse a minimum of 65% of the non-hazardous construction and demolition waste in accordance with Section 5.408.1.1, 5.408.1.2 or 5.408.1.3; or meet a local construction and demolition waste management ordinance, whichever is more stringent.

5.408.1.1 Construction waste management plan. Where a local jurisdiction does not have a construction and demolition waste management ordinance, submit a construction waste management plan that:

1. Identifies the construction and demolition waste materials to be diverted from disposal by efficient usage, recycling, reuse on the project or salvage for future use or sale.
2. Determines if construction and demolition waste materials will be sorted on-site (source-separated) or bulk mixed (single stream).
3. Identifies diversion facilities where construction and demolition waste material collected will be taken.
4. Specifies that the amount of construction and demolition waste materials diverted shall be calculated byweight or volume, but not by both.

5.408.1.2 Waste Management Company. Utilize a waste management company that can provide verifiable documentation that the percentage of construction and demolition waste material diverted from the landfill complies with this section.

Note: The owner or contractor shall make the determination if the construction and demolition waste material will be diverted by a waste management company.

Exceptions to Sections 5.408.1.1 and 5.408.1.2:

1. Excavated soil and land-clearing debris.
2. Alternate waste reduction methods developed by working with local agencies if diversion or recycle facilities capable of compliance with this item do not exist.
3. Demolition waste meeting local ordinance or calculated in consideration of local recycling facilities and markets.

5.408.1.3 Waste stream reduction alternative. The combined weight of new construction disposal that does not exceed two pounds per square foot of building area may be deemed to meet the 65% minimum requirement as approved by the enforcing agency.

5.408.1.4 Documentation. Documentation shall be provided to the enforcing agency which demonstrates compliance with Sections 5.408.1.1, through 5.408.1.3. The waste management plan shall be updated as necessary and shall be accessible during construction for examination by the enforcing agency.

Notes:

1. Sample forms found in "A Guide to the California Green Building Standards Code (Nonresidential)" located www.dgs.ca.gov/BSC/Resources/Page-Content/Building-Standards-Commission-Resources-List-Folder/CALGreen may be used to assist in documenting compliance with the waste management plan.
2. Mixed construction and demolition debris processors can be located at the California Department of Resources Recycling and Recovery (CalRecycle).

5.408.2 UNIVERSAL WASTE. [A] Additions and alterations to a building or tenant space that meet the scoping provisions in Section 301.3 for nonresidential additions and alterations, shall require verification that Universal Waste items such as fluorescent lamps and ballast and mercury containing thermostats as well as other California prohibited Universal Waste materials are disposed of properly and are diverted from landfills. A list of prohibited Universal Waste materials shall be included in the construction documents.

Note: Refer to the Universal Waste Rule link at: http://www.dtsc.ca.gov/universalwaste/

5.408.3 EXCAVATED SOIL AND LAND CLEARING DEBRIS. 100 percent of trees, stumps, rocks and associated vegetation and soils resulting primarily from land clearing shall be reused or recycled. For a phased project, such material may be stockpiled on site until the storage site is developed.

Exception: Reuse, either on or off-site, of vegetation or soil contaminated by disease or pest infestation.

Notes:

1. If contamination by disease or pest infestation is suspected, contact the County Agricultural Commissioner and follow its direction for recycling or disposal of the material.
2. For a map of know pest and/or disease quarantine zones, consult with the California Department of Food and Agriculture. (www.cdfa.ca.gov)

SECTION 5.410 BUILDING MAINTENANCE AND OPERATIONS

5.410.1 RECYCLING BY OCCUPANTS. Provide readily accessible areas that serve the entire building and are identified for the depositing, storage and collection of non-hazardous materials for recycling, including (at a minimum) paper, corrugated cardboard, glass, plastics, organic waste, and metals or meet a lawfully enacted local recycling ordinance, if more restrictive.

Exception: Rural jurisdictions that meet and apply for the exemption in Public Resources Code 42649.82 (a)(2)(A) et seq. shall also be exempt from the organic waste portion of this section.

5.410.1.1 Additions. All additions conducted within a 12-month period under single or multiple permits, resulting in an increase of 30% or more in floor area, shall provide recycling areas on site.

Exception: Additions within a tenant space resulting in less than a 30% increase in the tenant space floor area.

5.410.1.2 Sample ordinance. Space allocation for recycling areas shall comply with Chapter 18, Part 3, Division 30 of the *Public Resources Code*. Chapter 18 is known as the California Solid Waste Reuse and Recycling Access Act of 1991 (Act).

Note: A sample ordinance for use by local agencies may be found in Appendix A of the document at the CalRecycle's web site.

5.410.2 COMMISSIONING. [N] New buildings 10,000 square feet and over. For new buildings 10,000 square feet and over, building commissioning shall be included in the design and construction processes of the building project to verify that the building systems and components meet the owner's or owner representative's project requirements. Commissioning shall be performed in accordance with this section by trained personnel with experience on projects of comparable size and complexity. For I-occupancies that are not regulated by OSHPD or for I-occupancies and L-occupancies that are not regulated y the California Energy Code Section 100.0 Scope, all requirements in Sections 5.410.2 through 5.410.2.6 shall apply.

Note: For energy-related systems under the scope (Section 100) of the California Energy Code, including heating, ventilation, air conditioning (HVAC) systems and controls, indoor lighting systems and controls, as well as water heating systems and controls, refer to California Energy Code Section 120.8 for commissioning requirements

Commissioning requirements shall include:

1. Owner's or Owner representative's project requirements.
2. Basis of design.
3. Commissioning measures shown in the construction documents.
4. Commissioning plan.
5. Functional performance testing.
6. Documentation and training.
7. Commissioning report.

Exceptions:

1. Unconditioned warehouses of any size.
2. Areas less than 10,000 square feet used for offices or other conditioned accessory spaces within unconditioned warehouses.
3. Tenant improvements less than 10,000 square feet as described in Section 303.1.1.
4. Open parking garages of any size, or open parking garage areas, of any size, within a structure.

Note: For the purposes of this section, unconditioned shall mean a building, area, or room which does not provide heating and or air conditioning.

Informational Notes:

1. IAS AC 476 is an accreditation criteria for organizations providing training and/or certification of commissioning personnel. AC 476 is available to the Authority Having Jurisdiction as a reference for qualifications of commissioning personnel. AC 476 does not certify individuals to conduct functional performance tests or to adjust and balance systems.
2. Functional performance testing for heating, ventilation, air conditioning systems and lighting controls must be performed in compliance with the *California Energy Code*.

5.410.2.1 Owner's or Owner Representative's Project Requirements (OPR). [N] The expectations and requirements of the building appropriate to its phase shall be documented before the design phase of the project begins. This documentation shall include the following:
1. Environmental and sustainability goals.
2. Building sustainable goals.
3. Indoor environmental quality requirements.
4. Project program, including facility functions and hours of operation, and need for after hours operation.
5. Equipment and systems expectations.
6. Building occupant and operation and maintenance (O&M) personnel expectations.

5.410.2.2 Basis of Design (BOD). [N] A written explanation of how the design of the building systems meets the OPR shall be completed at the design phase of the building project. The Basis of Design document shall cover the following systems:

1. Renewable energy systems.
2. Landscape irrigation systems.
3. Water reuse system.

5.410.2.3 Commissioning plan. [N] Prior to permit issuance a commissioning plan shall be completed to document how the project will be commissioned. The commissioning plan shall include the following:
1. General project information.
2. Commissioning goals.
3. Systems to be commissioned. Plans to test systems and components shall include:
   a. An explanation of the original design intent.
   b. Equipment and systems to be tested, including the extent of tests.
   c. Functions to be tested.
   d. Conditions under which the test shall be performed.
   e. Measurable criteria for acceptable performance.
4. Commissioning team information.
5. Commissioning process activities, schedules and responsibilities. Plans for the completion of commissioning shall be included.

5.410.2.4 Functional performance testing. [N] Functional performance tests shall demonstrate the correct installation and operation of each component, system and system-to-system interface in accordance with the approved plans and specifications. Functional performance testing reports shall contain information addressing each of the building components tested, the testing methods utilized, and include any readings and adjustments made.

5.410.2.5 Documentation and training. [N] A Systems Manual and Systems Operations Training are required, including Occupational Safety and Health Act (OSHA) requirements in *California Code of Regulations* (CCR), Title 8, Section 5142, and other related regulations.

5.410.2.5.1 Systems manual. [N] Documentation of the operational aspects of the building shall be completed within the systems manual and delivered to the building owner or representative. The systems manual shall include the following:
1. Site information, including facility description, history and current requirements.
2. Site contact information.
3. Basic operations and maintenance, including general site operating procedures, basic troubleshooting, recommended maintenance requirements, site events log.
4. Major systems.
5. Site equipment inventory and maintenance notes.
6. A copy of verifications required by the enforcing agency or this code.
7. Other resources and documentation, if applicable.

5.410.2.5.2 Systems operations training. [N] A program for training of the appropriate maintenance staff for each equipment type and/or system shall be developed and documented in the commissioning report and shall include the following:
1. System/equipment overview (what it is, what it does and with what other systems and/or equipment it interfaces).
2. Review and demonstration of servicing/preventive maintenance.
3. Review of the information in the Systems Manual.
4. Review of the record drawings on the system/equipment.

5.410.2.6 Commissioning report. [N] A report of commissioning process activities undertaken through the design and construction phases of the building project shall be completed and provided to the owner or representative.

5.410.4 TESTING AND ADJUSTING. New buildings less than 10,000 square feet. Testing and adjusting of systems shall be required for new buildings less than 10,000 square feet or new systems to serve an addition or alteration subject to Section 303.1.

5.410.4.2 (Reserved)

Note: For energy-related systems under the scope (Section 100) of the California Energy Code, including heating, ventilation, air conditioning (HVAC) systems and controls, indoor lighting system and controls, as well as water heating systems and controls, refer to California Energy Code Section 120.8 for commissioning requirements and Sections 120.5, 120.6, 130.4, and 140.9(b)3 for additional testing requirements of specific systems.

5.410.4.2 Systems. Develop a written plan of procedures for testing and adjusting systems. Systems to be included for testing and adjusting shall include at a minimum, as applicable to the project:

1. Renewable energy systems.
2. Landscape irrigation systems.
3. Water reuse systems.

5.410.4.3 Procedures. Perform testing and adjusting procedures in accordance with manufacturer's specifications and applicable standards on each system.

5.410.4.3.1 HVAC balancing. In addition to testing and adjusting, before a new space-conditioning system serving a building or space is operated for normal use, the system shall be balanced in accordance with the procedures defined by the Testing Adjusting and Balancing Bureau National Standards; the National Environmental Balancing Bureau Procedural Standards; Associated Air Balance Council National Standards or as approved by the enforcing agency.

5.410.4.4 Reporting. After completion of testing, adjusting and balancing, provide a final report of testing signed by the individual responsible for performing these services.

5.410.4.5 Operation and maintenance (O & M) manual. Provide the building owner or representative with detailed operating and maintenance instructions and copies of guaranties/warranties for each system. O & M instructions shall be consistent with OSHA requirements in CCR, Title 8, Section 5142, and other related regulations.

5.410.4.5.1 Inspections and reports. Include a copy of all inspection verifications and reports required by the enforcing agency.

DIVISION 5.5 ENVIRONMENTAL QUALITY

SECTION 5.501 GENERAL

5.501.1 SCOPE. The provisions of this chapter shall outline means of reducing the quantity of air contaminants that are odorous, irritating, and/or harmful to the comfort and well-being of a building's installers, occupants and neighbors.

SECTION 5.502 DEFINITIONS

5.502.1 DEFINITIONS. The following terms are defined in Chapter 2 *(and are included here for reference)*

ARTERIAL HIGHWAY. A general term denoting a highway primarily for through traffic usually on a continuous route.

A-WEIGHTED SOUND LEVEL (dBA). The sound pressure level in decibels as measured on a sound level meter using the internationally standardized A-weighting filter or as computed from sound spectral data to which A-weighting adjustments have been made.

1 BTU/HOUR. British thermal units per hour, also referred to as Btu. The amount of heat required to raise one pound of water one degree Fahrenheit per hour, a common measure of heat transfer rate. A ton of refrigeration is 12,000 Btu, the amount of heat required to melt a ton (2,000 pounds) of ice at 32° Fahrenheit.

COMMUNITY NOISE EQUIVALENT LEVEL (CNEL). A metric similar to the day-night average sound level (Ldn), except that a 5 decibel adjustment is added to the equivalent continuous sound exposure level for evening hours (7pm to 10pm) in addition to the 10 dB nighttime adjustment used in the Ldn.

COMPOSITE WOOD PRODUCTS. Composite wood products include hardwood plywood, particleboard and medium density fiberboard. "Composite wood products" does not include hardboard, structural plywood, structural panels, structural composite lumber, oriented strand board, glued laminated timber, timber, prefabricated wood I–joists or finger–jointed lumber, all as specified in California Code of Regulations (CCR), Title 17, Section 93120.1(a).

Note: See CCR, Title 17, Section 93120.1.

DAY-NIGHT AVERAGE SOUND LEVEL (Ldn). The A-weighted equivalent continuous sound exposure level for a 24-hour period with a 10 dB adjustment added to sound levels occurring during nighttime hours (10p.m. to 7 a.m.).

DECIBEL (db). A measure on a logarithmic scale of the magnitude of a particular quantity (such as sound pressure, sound power, sound intensity) with respect to a reference quantity.

ELECTRIC VEHICLE (EV). An automotive-type vehicle for on-road use, such as passenger automobiles, buses, trucks, vans, neighborhood electric vehicles, electric motorcycles, and the like, primarily powered by an electric motor that draws current from a rechargeable storage battery, fuel cell, photovoltaic array, or other source of electric current. Plug-in hybrid electric vehicles (PHEV) are considered electric vehicles. For purposes of the *California Electrical Code*, off-road, self-propoelled electric vehicles, such as industrial trucks, hoists, lifts, transports, golf carts, airline ground support equipment, tractors, boats, and the like, are not included.

ELECTRIC VEHICLE CHARGING STATION(S) (EVCS)). One or more spaces intended for charging electric vehicles.

ELECTRIC VEHICLE SUPPLY EQUIPMENT (EVSE). The conductors, including the ungrounded, grounded, and equipment grounding conductors and the electric vehicle connectors, attachment plugs, and all other fittings, devices, power outlets, or apparatus installed specifically for the purpose of transferring energy between the premises wiring and the electric vehicle.

ENERGY EQUIVALENT (NOISE) LEVEL (Leq). The level of a steady noise which would have the same energy as the fluctuating noise level integrated over the time of period of interest.

EXPRESSWAY. An arterial highway for through traffic which may have partial control of access, but which may or may not be divided or have grade separations at intersections.

FREEWAY. A divided arterial highway with full control of access and with grade separations at intersections.

GLOBAL WARMING POTENTIAL (GWP). The radiative forcing impact of one mass-based unit of a given greenhouse gas relative to an equivalent unit of carbon dioxide over a given period of time. Carbon dioxide is the reference compound with a GWP of one.

GLOBAL WARMING POTENTIAL VALUE (GWP VALUE). A 100-year GWP value published by the Intergovernmental Panel on Climate Change (IPCC) in either its Second Assessment Report (SAR) (IPCC, 1995); or its Fourth Assessment A-3 Report (AR4) (IPCC, 2007). The SAR GWP values are found in column "SAR (100-yr)" of Table 2.14.; the AR4 GWP values are found in column "100 yr" of Table 2.14.

HIGH-GWP REFRIGERANT. A compound used as a heat transfer fluid or gas that is: (a) a chlorofluorocarbon, a hdrochlorofluorocarbon, a hydrofluorocarbon, a perfluorocarbon, or any compound or blend of compounds, with a GWP value equal to or greater than 150, or (B) any ozone depleting substance as defined in Title 40 of the Code of Federal Regulations, Part 82, sec.82.3 (as amended March 10, 2009).

LONG RADIUS ELBOW. Pipe fitting installed between two lengths of pipe or tubing to allow a change of direction, with a radius 1.5 times the pipe diameter.

LOW-GWP REFRIGERANT. A compound used as a heat transfer fluid or gas that: (A) has a GWP value less than 150, and (B) is not an ozone depleting substance as defined in Title 40 of the Code of Federal Regulations, Part 82, sec.82.3 (as amended March 10, 2009).

MERV. Filter minimum efficiency reporting value, based on ASHRAE 52.2–1999.

MAXIMUM INCREMENTAL REACTIVITY (MIR). The maximum change in weight of ozone formed by adding a compound to the "Base REactive Organic Gas (ROG) Mixture" per weight of compound added, expressed to hundreths of a gram (g O^3/g ROC).

PRODUCT-WEIGHTED MIR (PWMIR). The sum of all weighted-MIR for all ingredients in a product subject to this article. The PWMIR is the total product reactivity expressed to hundredths of a gram of ozone formed per gram of product (excluding container and packaging).

PSIG. Pounds per square inch, guage.

REACTIVE ORGANIC COMPOUND (ROC). Any compound that has the potential, once emitted, to contribute to ozone formation in the troposphere.

SCHRADER ACCESS VALVES. Access fittings with a valve core installed.

SHORT RADIUS ELBOW. Pipe fitting installed between two lengths of pipe or tubing to allow a change of direction, with a radius 1.0 times the pipe diameter.

SUPERMARKET. For the purposes of Section 5.508.2, a supermarket is any retail food facility with 8,000 square feet or more conditioned area, and that utilizes either refrigerated display cases, or walk-in coolers or freezers connected to remote compressor units or condensing units.

VOC. A volatile organic compound broadly defined as a chemical compound based on carbon chains or rings with vapor pressures greater than 0.1 millimeters of mercury at room temperature. These compounds typically contain hydrogen and may contain oxygen, nitrogen and other elements. See CCR Title 17, Section 94508(a)

Note: Where specific regulations are cited from different agencies such as SCAQMD, ARB, etc., the VOC definition included in that specific regulation is the one that prevails for the specific measure in question.

SECTION 5.503 FIREPLACES

5.503.1 FIREPLACES. Install only a direct-vent sealed-combustion gas or sealed wood-burning fireplace, or a sealed woodstove or pellet stove, and refer to residential requirements in the California Energy Code, Title 24, Part 6, Subchapter 7, Section 150. Woodstoves, pellet stoves and fireplaces shall comply with applicable local ordinances.

5.503.1.1 Woodstoves. Woodstoves and pellet stoves shall comply with U.S. EPA New Source Performance Standards (NSPS) emission limits as applicable, and shall have a permanent label indicating they are certified to meet the emission limits.

SECTION 5.504 POLLUTANT CONTROL

5.504.1 TEMPORARY VENTILATION. The permanent HVAC system shall only be used during construction if necessary to condition the building or areas of addition or alteration within the required temperature range for material and equipment installation. If the HVAC system is used during construction, use return air filters with a Minimum Efficiency Reporting Value (MERV) of 8, based on ASHRAE 52.2-1999, or an average efficiency of 30% based on ASHRAE 52.1-1992 Replace all filters immediately prior to occupancy, or, if the building is occupied during alteration, at the conclusion of construction.

5.504.3 Covering of duct openings and protection of mechanical equipment during construction. At the time of rough installation and during storage on the construction site until final startup of the heating, cooling and ventilation equipment, all duct and other related air distribution component openings shall be covered with tape, plastic, sheetmetal or other methods acceptable to the enforcing agency to reduce the amount of dust, water and debris which may enter the system.

DISCLAIMER: *THIS DOCUMENT IS PROVIDED AND INTENDED TO BE USED AS A MEANS TO INDICATE AREAS OF COMPLIANCE WITH THE CALIFORNIA GREEN BUILDING STANDARDS (CALGREEN) CODE. DUE TO THE VARIABLES BETWEEN BUILDING DEPARTMENT JURISDICTIONS, THIS CHECKLIST IS TO BE USED ON AN INDIVIDUAL PROJECT BASIS AND MAY BE MODIFIED BY THE END USER TO MEET THOSE INDIVIDUAL NEEDS. THE END USER ASSUMES ALL RESPONSIBILITY ASSOCIATED WITH THE USE OF THIS DOCUMENT, INCLUDING VERIFICATION WITH THE FULL CODE.*

6/15/2021 11:49:12 PM C:\Users\User\Documents\20093 - Aries, 24x40 PC - MainFile - Low Seismic_6.7_CESAR24D63.rvt

PROJECT SPECIFIC STATE AGENCY APPROVAL

IDENTIFICATION STAMP
DIV. OF THE STATE ARCHITECT
APP: 02-123433 INC:
REVIEWED FOR
SS ☑ FLS ☑ ACS ☑
DATE: 01/20/2026

R&S TAVARES ASSOCIATES
DESIGN ★ CONSULTING ★ PROJECT MGT
11590 W Bernardo Court, Suite 100
San Diego, CA 92127
www.rstavares.com

PROFESSIONAL STAMP

REGISTERED PROFESSIONAL ENGINEER
JAMMY D. FRANCOMETER
No. 13380
Exp. 03/31/24
STRUCTURAL
STATE OF CALIFORNIA
RST#22088
02/16/24

THE PLANS, IDEAS & DESIGNS SHOWN ON THESE DRAWINGS ARE THE PROPERTY OF R&S TAVARES ASSOCIATES, INC. DEVISED SOLELY FOR THIS CONTRACT. THESE PLANS SHALL NOT BE USED, IN WHOLE OR IN PART, FOR ANY PURPOSE FOR WHICH THEY WERE NOT INTENDED WITHOUT THE EXPRESS WRITTEN CONSENT OF R&S TAVARES ASSOCIATES, INC. ©

CLIENT

Class Leasing
1651Juanita Street, San Jacinto, CA 92583
Voice (951) 943-1908 Fax (951)943-5768

ORIGINAL PC STATE AGENCY APPROVAL

APPROVED
DIV. OF THE STATE ARCHITECT
APP: 04-123059 PC
REVIEWED FOR
SS ☑ FLS ☑ ACS ☑ CG ☑
DATE: 02/20/2024

Revision Schedule

#	Description	Date

PRE-CHECK (PC) DOCUMENT

Code: 2022 CBC

A separate project application for construction is required

PROJECT TITLE
PC 2022 CBC: 24' x 40' EXPANDABLE TO 120' x 40'

SHEET TITLE
CAL GREEN CHECKLIST

PROJECT NUMBER
22088

DRAWN BY
rMc/SC

CHECKED BY
RH/RT

DATE

SHEET NO.
A0.7

SHEET OF

2022 CALIFORNIA GREEN BUILDING STANDARDS CODE
NONRESIDENTIAL MANDATORY MEASURES, SHEET 3 (January 2023)

Y = YES
N/A = NOT APPLICABLE
RESPON. PARTY = RESPONSIBLE PARTY (ie: ARCHITECT, ENGINEER OWNER, CONTRACTOR, INSPECTOR ETC.)

5.504.4 FINISH MATERIAL POLLUTANT CONTROL. Finish materials shall comply with Sections 5.504.4.1 through 5.504.4.6.

5.504.4.1 Adhesives, sealants and caulks. Adhesives, sealants, and caulks used on the project shall meet the requirements of the following standards:
1. Adhesives, adhesive bonding primers, adhesive primers, sealants, sealant primers and caulks shall comply with local or regional air pollution control or air quality management district rules where applicable, or SCAQMD Rule 1168 VOC limits, as shown in Tables 5.504.4.1 and 5.504.4.2. Such products also shall comply with the Rule 1168 prohibition on the use of certain toxic compounds (chloroform, ethylene dichloride, methylene chloride, perchloroethylene and trichloroethylene), except for aerosol products as specified in subsection 2, below.

2. Aerosol adhesives, and smaller unit sizes of adhesives, and sealant or caulking compounds (in units of product, less packaging, which do not weigh more than one pound and do not consist of more than 16 fluid ounces) shall comply with statewide VOC standards and other requirements, including prohibitions on use of certain toxic compounds, of *California Code of Regulations*, Title 17, commencing with Section 94507.

TABLE 5.504.4.1 - ADHESIVE VOC LIMIT[1,2]

Less Water and Less Exempt Compounds in Grams per Liter

ARCHITECTURAL APPLICATIONS	CURRENT VOC LIMIT
INDOOR CARPET ADHESIVES	50
CARPET PAD ADHESIVES	50
OUTDOOR CARPET ADHESIVES	150
WOOD FLOORING ADHESIVES	100
RUBBER FLOOR ADHESIVES	60
SUBFLOOR ADHESIVES	50
CERAMIC TILE ADHESIVES	65
VCT & ASPHALT TILE ADHESIVES	50
DRYWALL & PANEL ADHESIVES	50
COVE BASE ADHESIVES	50
MULTIPURPOSE CONSTRUCTION ADHESIVES	70
STRUCTURAL GLAZING ADHESIVES	100
SINGLE-PLY ROOF MEMBRANE ADHESIVES	250
OTHER ADHESIVES NOT SPECIFICALLY LISTED	50
SPECIALTY APPLICATIONS	
PVC WELDING	510
CPVC WELDING	490
ABS WELDING	325
PLASTIC CEMENT WELDING	250
ADHESIVE PRIMER FOR PLASTIC	550
CONTACT ADHESIVE	80
SPECIAL PURPOSE CONTACT ADHESIVE	250
STRUCTURAL WOOD MEMBER ADHESIVE	140
TOP & TRIM ADHESIVE	250
SUBSTRATE SPECIFIC APPLICATIONS	
METAL TO METAL	30
PLASTIC FOAMS	50
POROUS MATERIAL (EXCEPT WOOD)	50
WOOD	30
FIBERGLASS	80

1. IF AN ADHESIVE IS USED TO BOND DISSIMILAR SUBSTRATES TOGETHER, THE ADHESIVE WITH THE HIGHEST VOC CONTENT SHALL BE ALLOWED.

2. FOR ADDITIONAL INFORMATION REGARDING METHODS TO MEASURE THE VOC CONTENT SPECIFIED IN THIS TABLE, SEE SOUTH COAST AIR QUALITY MANAGEMENT DISTRICT RULE 1168, www.arb.ca.gov/DRDB/SC/CURHTML/R1168.PDF

TABLE 5.504.4.2 - SEALANT VOC LIMIT

Less Water and Less Exempt Compounds in Grams per Liter

SEALANTS	CURRENT VOC LIMIT
ARCHITECTURAL	250
MARINE DECK	760
NONMEMBRANE ROOF	300
ROADWAY	250
SINGLE-PLY ROOF MEMBRANE	450
OTHER	420
SEALANT PRIMERS	
ARCHITECTURAL	
NONPOROUS	250
POROUS	775
MODIFIED BITUMINOUS	500
MARINE DECK	760
OTHER	750

NOTE: FOR ADDITIONAL INFORMATION REGARDING METHODS TO MEASURE THE VOC CONTENT SPECIFIED IN THESE TABLES, SEE SOUTH COAST AIR QUALITY MANAGEMENT DISTRICT RULE 1168.

5.504.4.3 Paints and coatings. Architectural paints and coatings shall comply with VOC limits in Table 1 of the ARB Architectural Coatings Suggested Control Measure, as shown in Table 5.504.4.3, unless more stringent local limits apply. The VOC content limit for coatings that do not meet the definitions for the specialty coatings categories listed in Table 5.504.4.3 shall be determined by classifying the coating as a Flat, Nonflat or Nonflat-High Gloss coating, based on its gloss, as defined in Subsections 4.21, 4.36 and 4.37 of the 2007 California Air Resources Board Suggested Control Measure, and the corresponding Flat, Nonflat or Nonflat-High Gloss VOC limit in Table 5.504.4.3 shall apply.

5.504.4.3.1 Aerosol Paints and coatings. Aerosol paints and coatings shall meet the PWMIR Limits for ROC in Section 94522(a)(3) and other requirements, including prohibitions on use of certain toxic compounds and ozone depleting substances, in Sections 94522(c)(2) and (d)(2) of *California Code of Regulations*, Title 17, commencing with Section 94520; and in areas under the jurisdiction of the Bay Area Air Quality Management District additionally comply with the percent VOC by weight of product limits of Regulation 8 Rule 49.

TABLE 5.504.4.3 - CONT.

GRAMS OF VOC PER LITER OF COATING, LESS WATER & LESS EXEMPT COMPOUNDS

COATING CATEGORY	CURRENT VOC LIMIT
SPECIALTY COATINGS	
ALUMINUM ROOF COATINGS	400
BASEMENT SPECIALTY COATINGS	400
BITUMINOUS ROOF COATINGS	50
BITUMINOUS ROOF PRIMERS	350
BOND BREAKERS	350
CONCRETE CURING COMPOUNDS	350
CONCRETE/MASONRY SEALERS	100
DRIVEWAY SEALERS	50
DRY FOG COATINGS	150
FAUX FINISHING COATINGS	350
FIRE RESISTIVE COATINGS	350
FLOOR COATINGS	100
FORM-RELEASE COMPOUNDS	250
GRAPHIC ARTS COATINGS (SIGN PAINTS)	500
HIGH-TEMPERATURE COATINGS	420
INDUSTRIAL MAINTENANCE COATINGS	250
LOW SOLIDS COATINGS[1]	120
MAGNESITE CEMENT COATINGS	450
MASTIC TEXTURE COATINGS	100
METALLIC PIGMENTED COATINGS	500
MULTICOLOR COATINGS	250
PRETREATMENT WASH PRIMERS	420
PRIMERS, SEALERS, & UNDERCOATERS	100
REACTIVE PENETRATING SEALERS	350
RECYCLED COATINGS	250
ROOF COATINGS	50
RUST PREVENTATIVE COATINGS	250
SHELLACS:	
CLEAR	730
OPAQUE	550
SPECIALTY PRIMERS, SEALERS & UNDERCOATERS	100
STAINS	250
STONE CONSOLIDANTS	450
SWIMMING POOL COATINGS	340
TRAFFIC MARKING COATINGS	100
TUB & TILE REFINISH COATINGS	420
WATERPROOFING MEMBRANES	250
WOOD COATINGS	275
WOOD PRESERVATIVES	350
ZINC-RICH PRIMERS	340

1. GRAMS OF VOC PER LITER OF COATING, INCLUDING WATER & EXEMPT COMPOUNDS

2. THE SPECIFIED LIMITS REMAIN IN EFFECT UNLESS REVISED LIMITS ARE LISTED IN SUBSEQUENT COLUMNS IN THE TABLE.

3. VALUES IN THIS TABLE ARE DERIVED FROM THOSE SPECIFIED BY THE CALIFORNIA AIR RESOURCES BOARD, ARCHITECTURAL COATINGS SUGGESTED CONTROL MEASURE, FEB. 1, 2008. MORE INFORMATION IS AVAILABLE FROM THE AIR RESOURCES BOARD.

5.504.4.3.2 Verification. Verification of compliance with this section shall be provided at the request of the enforcing agency. Documentation may include, but is not limited to, the following:
1. Manufacturer's product specification
2. Field verification of on-site product containers

5.504.4.4 Carpet Systems.
All carpet installed in the building interior shall meet the requirements of the California Department of Public Health, "Standard Method for the Testing and Evaluation of Volatile Organic Chemical Emissions from Indoor Sources Using Environmental Chambers." Version 1.2, January 2017 (Emission testing method for California Specifications 01350).

See California Department of Public Health's website for certification programs and testing labs.
https://www.cdph.ca.gov/Programs/CCDPHP/DEODC/EHLB/IAQ/Pages/VOC.aspx#material

5.504.4.4.1 Carpet cushion. All carpet cushion installed in the building interior shall meet the requirements of the California Department of Public Health,"Standard Method for the Testing and Evaluation of Volatile Organic Chemical Emissions from Indoor Sources Using Environmental Chambers."Version 1.2, January 2017 (Emission testing method for California Specifications 01350).

See California Department of Public Health's website for certification programs and testing labs.
https://www.cdph.ca.gov/Programs/CCDPHP/DEODC/EHLB/IAQ/Pages/VOC.aspx#material

5.504.4.4.2 Carpet adhesive. All carpet adhesive shall meet the requirements of Table 5.504.4.1.

5.504.4.5 Composite wood products. Hardwood plywood, particleboard and medium density fiberboard composite wood products used on the interior or exterior of the buildings shall meet the requirements for formaldehyde as specified in ARB's Air Toxics Control Measure (ATCM) for Composite Wood (17 CCR 93120 et seq.). Those materials not exempted under the ATCM must meet the specified emission limits, as shown in Table 5.504.4.5.

5.504.4.5.3 Documentation. Verification of compliance with this section shall be provided as requested by the enforcing agency. Documentation shall include at least one of the following:
1. Product certifications and specifications.
2. Chain of custody certifications.
3. Product labeled and invoiced as meeting the Composite Wood Products regulation (see CCR, Title 17, Section 93120, et seq.).
4. Exterior grade products marked as meeting the PS-1 or PS-2 standards of the Engineered Wood Association, the Australian AS/NZS 2269 or European 636 3S standards.
5. Other methods acceptable to the enforcing agency.

TABLE 5.504.4.5 - FORMALDEHYDE LIMITS[1]

MAXIMUM FORMALDEHYDE EMISSIONS IN PARTS PER MILLION

PRODUCT	CURRENT LIMIT
HARDWOOD PLYWOOD VENEER CORE	0.05
HARDWOOD PLYWOOD COMPOSITE CORE	0.05
PARTICLE BOARD	0.09
MEDIUM DENSITY FIBERBOARD	0.11
THIN MEDIUM DENSITY FIBERBOARD[2]	0.13

1. VALUES IN THIS TABLE ARE DERIVED FROM THOSE SPECIFIED BY THE CALIFORNIA AIR RESOURCES BOARD, AIR TOXICS CONTROL MEASURE FOR COMPOSITE WOOD AS TESTED IN ACCORDANCE WITH ASTM E 1333. FOR ADDITIONAL INFORMATION, SEE CALIFORNIA CODE OF REGULATIONS, TITLE 17, SECTIONS 93120 THROUGH 93120.12.

2. THIN MEDIUM DENSITY FIBERBOARD HAS A MAXIMUM THICKNESS OF 5/16 INCHES (8 MM).

5.504.4.6 Resilient flooring systems. Where resilient flooring is installed, at least 80 percent of floor area receiving resilient flooring shall meet the requirements of the California Department of Public Health,"Standard Method for the Testing and Evaluation of Volatile Organic Chemical Emissions from Indoor Sources Using Environmental Chambers," Version 1.2, January 2017 (Emission testing method for California Specifications 01350)

See California Department of Public Health's website for certification programs and testing labs.
https://www.cdph.ca.gov/Programs/CCDPHP/DEODC/EHLB/IAQ/Pages/VOC.aspx#material

5.504.4.6.1 Verification of compliance. Documentation shall be provided verifying that resilient flooring materials meet the pollutant emission limits.

5.504.4.7 Thermal insulation
Comply with the requirements of the California Department of Public Health, "Standard Method of the Testing and Evaluation of Volatile Organic Chemical Emissions from Indoor Sources Using Environmental Chambers, "Version 1.2, January 1.2, January 2017 (Emission testing method for California Specification 013350).
See California Department of Public Health's website for certification programs and testing labs.
https://www.cdph.ca.gov/Programs/CCDPHP/DEODC/EHLB/IAQ/Pages/VOC.aspx#material

5.504.4.7.1 Verification of compliance.
Documentation shall be provided verifying that thermal insulation materials meet the pollutant emission limits.

5.504.4.8 Acoustical ceiling and wall panels.
Comply with the requirements of the California Department of Public Health, "Standard Method for the Testing and Evaluation of Volatile Organic Chemical Emissions from Indoor Sources Using Environmental Chambers, " Version 1.2, January 2017 (Emission testing method for California Specification 01350).
See California Department of Public Health's website for certification programs and testing labs.

5.504.4.8.1 Verification of compliance. Documentation shall be provided verifying that acoustical finish materials meet the pollutant emission limits.

5.504.5.3 Filters. In mechanically ventilated buildings, provide regularly occupied areas of the building with air filtration media for outside and return air that provides at least a Minimum Efficiency Reporting Value (MERV) of 13. MERV 13 filters shall be installed prior to occupancy, and recommendations for maintenance with filters of the same value shall be included in the operation and maintenance manual.

Exceptions: Existing mechanical equipment.

5.504.5.3.1 Labeling. Installed filters shall be clearly labeled by the manufacturer indicating the MERV rating.

5.504.7 ENVIRONMENTAL TOBACCO SMOKE (ETS) CONTROL. Where outdoor areas are provided for smoking, prohibit smoking within 25 feet of building entries, outdoor air intakes and operable windows and within the building as already prohibited by other laws or regulations; or as enforced by ordinances, regulations or policies of any city, county, city and county, California Community College, campus of the California State University, or campus of the University of California, whichever are more stringent. When ordinances, regulations or policies are not in place, post signage to inform building occupants of the prohibitions.

SECTION 5.505 INDOOR MOISTURE CONTROL
5.505.1 INDOOR MOISTURE CONTROL. Buildings shall meet or exceed the provisions of California Building Code, CCR, Title 24, Part 2, Sections 1202 (Ventilation) and Chapter 14 (Exterior Walls). For additional measures, see Section 5.407.2 of this code.

SECTION 5.506 INDOOR AIR QUALITY
5.506.1 OUTSIDE AIR DELIVERY. For mechanically or naturally ventilated spaces in buildings, meet the minimum requirements of Section 120.1 (Requirements For Ventilation) of the *California Energy Code*, or the applicable local code, whichever is more stringent, and Division 1, Chapter 4 of CCR, Title 8.

5.506.2 CARBON DIOXIDE (CO_2) MONITORING. For buildings or additions equipped with demand control ventilation, CO_2 sensors and ventilation controls shall be specified and installed in accordance with the requirements of the California Energy Code, Section 120(c)(4).

5.506.3 Carbon dioxide (CO2) monitoring in classrooms.
(DSA-SS) Each public K-12 school classroom, as listed in Table 120.1-A of the *California Energy Code,* shall be equipped with a carbon dioxide monitor or sensor that meets the following requirements:
1. The monitor or sensor shall be permanently affixed in a tamper-proof manner in each classroom between 3 and 6 feet (914 mm and 1829 mm) above the floor and at least 5 feet (1524 mm) away from door and operable windows.
2. When the monitor or sensor is not integral to an Energy Management Control System (EMCS), the monitor or sensor shall display the carbon dioxide readings on the device. When the sensor is integral to an EMCS, the carbon dioxide readings shall be available to and regularly monitored by facility personnel.
3. A monitor shall provide notification though a visual indicator on the monitor when the carbon dioxide levels in the classroom have exceeded 1,100ppm. A sensor integral to an EMCS shall provide notification to facility personnel through a visual and/or audible indicator when the carbon dioxide levels in the classroom have exceeded 1,100ppm.
4. The monitor or sensor shall measure carbon dioxide levels at minimum 15- minute intervals and shall maintain a record of previous carbon dioxide measurements of not less than 30 days duration.
5. The monitor or sensor used to measure carbon dioxide levels shall have the capacity to measure carbon dioxide levels with a range of 400ppm to 2000ppm or greater.
6. The monitor or sensor shall be certified by the manufacturer to be accurate within 75ppm at 1,000ppm carbon dioxide concentration and shall be certified by the manufacturer to require calibration no more frequently than once every 5 years.

SECTION 5.507 ENVIRONMENTAL COMFORT
5.507.4 ACOUSTICAL CONTROL. Employ building assemblies and components with Sound Transmission Class (STC) values determined in accordance with ASTM E 90 and ASTM E 413, or Outdoor-Indoor Sound Transmission Class (OITC) determined in accordance with ASTM E 1332, using either the prescriptive or performance method in Section 5.507.4.1 or 5.507.4.2.

Exception: Buildings with few or no occupants or where occupants are not likely to be affected by exterior noise, as determined by the enforcement authority, such as factories, stadiums, storage, enclosed parking structures and utility buildings.

Exception: [DSA-SS] For public schools and community colleges, the requirements of this section and all subsections apply only to new construction.

5.507.4.1 Exterior noise transmission, prescriptive method. Wall and roof-ceiling assemblies exposed to the noise source making up the building or addition envelope or altered envelope shall meet a composite STC rating of at least 50 or a composite OITC rating of no less than 40, with exterior windows of a minimum STC of 40 or OITC of 30 in the following locations:

1. Within the 65 CNEL noise contour of an airport.

Exceptions:

1. L_{dn} or CNEL for military airports shall be determined by the facility Air Installation Compatible Land Use Zone (AICUZ) plan.
2. L_{dn} or CNEL for other airports and heliports for which a land use plan has not been developed shall be determined by the local general plan noise element.

2. Within the 65 CNEL or L_{dn} noise contour of a freeway or expressway, railroad, industrial source or fixed-guideway source as determined by the Noise Element of the General Plan.

5.507.4.1.1. Noise exposure where noise contours are not readily available. Buildings exposed to a noise level of 65 dB L_{eq} - 1-hr during any hour of operation shall have building, addition or alteration exterior wall and roof-ceiling assemblies exposed to the noise source meeting a composite STC rating of at least 45 (or OITC 35), with exterior windows of a minimum STC of 40 (or OITC 30).

5.507.4.2 Performance Method. For buildings located as defined in Section 5.507.4.1 or 5.507.4.1.1, wall and roof-ceiling assemblies exposed to the noise source making up the building or addition envelope or altered envelope shall be constructed to provide an interior noise environment attributable to exterior sources that does not exceed an hourly equivalent noise level (Leq-1Hr) of 50 dBA in occupied areas during any hour of operation.

5.507.4.2.1 Site Features. Exterior features such as sound walls or earth berms may be utilized as appropriate to the building, addition or alteration project to mitigate sound migration to the interior.

5.507.4.2.2 Documentation of Compliance. An acoustical analysis documenting complying interior soundlevels shall be prepared by personnel approved by the architect or engineer of record.

5.507.4.3 Interior sound transmission. Wall and floor-ceiling assemblies separating tenant spaces and tenant spaces and public places shall have an STC of at least 40.

Note: Examples of assemblies and their various STC ratings may be found at the California Office of Noise Control: www.toolbase.org/PDF/CaseStudies/stc_icc_ratings.pdf.

SECTION 5.508 OUTDOOR AIR QUALITY
5.508.1 Ozone depletion and greenhouse gas reductions. Installations of HVAC, refrigeration and fire suppression equipment shall comply with Sections 5.508.1.1 and 5.508.1.2.

5.508.1.1 Chlorofluorocarbons (CFCs). Install HVAC, refrigeration and fire suppression equipment that do not contain CFCs.

5.508.1.2 Halons. Install HVAC, refrigeration and fire suppression equipment that do not contain Halons.

5.508.2 Supermarket refrigerant leak reduction. New commercial refrigeration systems shall comply with the provisions of this section when installed in retail food stores 8,000 square feet or more conditioned area, and that utilize either refrigerated display cases, or walk-in coolers or freezers connected to remote compressor units or condensing units. The leak reduction measures apply to refrigeration systems containing high-global-warming potential (high-GWP) refrigerants with a GWP of 150 or greater. New refrigeration systems include both new facilities and the replacement of existing refrigeration systems in existing facilities.

Exception: Refrigeration systems containing low-global warming potential (low-GWP) refrigerant with a GWP value less than 150 are not subject to this section. Low-GWP refrigerants are nonozone-depleting refrigerants that include ammonia, carbon dioxide (CO_2), and potentially other refrigerants.

5.508.2.1 Refrigerant piping. Piping compliant with the California Mechanical Code shall be installed to be accessible for leak protection and repairs. Piping runs using threaded pipe, copper tubing with an outside diameter (OD) less than 1/4 inch, flared tubing connections and short radius elbows shall not be used in refrigerant systems except as noted below.

5.508.2.1.1 Threaded pipe. Threaded connections are permitted at the compressor rack.

5.508.2.1.2 Copper pipe. Copper tubing with an OD less than 1/4 inch may be used in systems with a refrigerant charge of 5 pounds or less.

5.508.2.1.2.1 Anchorage. One-fouth-inch OD tubing shall be securely clamped to a rigid base to keep vibration levels below 8 mils.

5.508.2.1.3 Flared tubing connections. Double-flared tubing connections may be used for pressure controls, valve pilot lines and oil.

Exception: Single-flared tubing connections may be used with a multiring seal coated with industrial sealant suitable for use with refrigerants and tightened in accordance with manufacturer's recommendations.

5.508.2.1.4 Elbows. Short radius elbows are only permitted where space limitations prohibit use of long radius elbows.

5.508.2.2 Valves. Valves Valves and fittings shall comply with the *California Mechanical Code* and as follows.

5.508.2.2.1 Pressure relief valves. For vessels containing high-GWP refrigerant, a rupture disc shall be installed between the outlet of the vessel and the inlet of the pressure relief valve.

5.508.2.2.1.1 Pressure detection. A pressure gauge, pressure transducer or other device shall be installed in the space between the rupture disc and the relief valve inlet to indicate a disc rupture or discharge of the relief valve.

5.508.2.2.2 Access valves. Only Schrader access valves with a brass or steel body are permitted for use.

5.508.2.2.2.1 Valve caps. For systems with a refrigerant charge of 5 pounds or more, valve caps shall be brass or steel and not plastic.

5.508.2.2.2.2 Seal caps. If designed for it, the cap shall have a neoprene O-ring in place.

5.508.2.2.2.2.1 Chain tethers. Chain tethers to fit ovr the stem are required for valves designed to have seal caps.

Exception: Valves with seal caps that are not removed from the valve during stem operation.

5.508.2.3 Refrigerated service cases. Refrigerated service cases holding food products containing vinegar and salt shall have evaporator coils of corrosion-resistant material, such as stainless steel; or be coated to prevent corrosion from these substances.

5.508.2.3.1 Coil coating. Consideration shall be given to the heat transfer efficiency of coil coating to maximize energy efficiency.

5.508.2.4 Refrigerant receivers. Refrigerant receivers with capacities greater than 200 pounds shall be fitted with a device tha indicates the level of refrigerant in the receiver.

5.508.2.5 Pressure testing. The system shall be pressure tested during installation prior to evacuation and charging.

5.508.2.5.1 Minimum pressure. The system shall be charged with regulated dry nitrogen and appropriate tracer gas to bring system pressure up to 300 psig minimum.

5.508.2.5.2 Leaks. Check the system for leaks, repair any leaks, and retest for pressure using the same gauge.

5.508.2.5.3 Allowable pressure change. The system shall stand, unaltered, for 24 hours with no more than a +/- one pound pressure change from 300 psig, measured with the same gauge.

5.508.2.6 Evacuation. The system shall be evacuated after pressure testing and prior to charging.

5.508.2.6.1 First vacuum. Pull a system vacuum down to at least 1000 microns (+/- 50 microns), and hold for 30 minutes.

5.508.2.6.2 Second vacuum. Pull a second system vacuum to a minimum of 500 microns and hold for 30 minutes.

5.508.2.6.3 Third vacuum. Pull a third vacuum down to a minimum of 300 microns, and hold for 24 hours with a maximum drift of 100 microns over a 24-hour period.

CHAPTER 7
INSTALLER & SPECIAL INSPECTOR QUALIFICATIONS
702 QUALIFICATIONS
702.1 INSTALLER TRAINING. HVAC system installers shall be trained and certified in the proper installation of HVAC systems including ducts and equipment by a nationally or regionally recognized training or certification program. Uncertified persons may perform HVAC installations when under the direct supervision and responsibility of a person trained and certified to install HVAC systems or contractor licensed to install HVAC systems. Examples of acceptable HVAC training and certification programs include but are not limited to the following:

1. State certified apprenticeship programs.
2. Public utility training programs.
3. Training programs sponsored by trade, labor or statewide energy consulting or verification organizations.
4. Programs sponsored by manufacturing organizations.
5. Other programs acceptable to the enforcing agency.

702.2 SPECIAL INSPECTION [HCD]. When required by the enforcing agency, the owner or the responsible entity acting as the owner's agent shall employ one or more special inspectors to provide inspection or other duties necessary to substantiate compliance with this code. Special inspectors shall demonstrate competence to the satisfaction of the enforcing agency for the particular type of inspection or task to be performed. In addition to other certifications or qualifications acceptable to the enforcing agency, the following certifications or education may be considered by the enforcing agency when evaluating the qualifications of a special inspector:

1. Certification by a national or regional green building program or standard publisher.
2. Certification by a statewide energy consulting or verification organization, such as HERS raters, building performance contractors, and home energy auditors.
3. Successful completion of a third party apprentice training program in the appropriate trade.
4. Other programs acceptable to the enforcing agency.

Notes:

1. Special inspectors shall be independent entities with no financial interest in the materials or the project they are inspecting for compliance with this code.
2. HERS raters are special inspectors certified by the California Energy Commission (CEC) to rate homes in California according to the Home Energy Rating System (HERS).

[BSC-CG] When required by the enforcing agency, the owner or the responsible entity acting as the owner's agent shall employ one or more special inspectors to provide inspection or other duties necessary to substantiate compliance with this code. Special inspectors shall demonstrate competence to the satisfaction of the enforcing agency for the particular type of inspection or task to be performed. In addition, the special inspector shall have a certification from a recognized state, national or international association, as determined by the local agency. The area of certification shall be closely related to the primary job function, as determined by the local agency.

Note: Special inspectors shall be independent entities with no financial interest in the materials or the project they are inspecting for compliance with this code.

703 VERIFICATIONS
703.1 DOCUMENTATION. Documentation used to show compliance with this code shall include but is not limited to, construction documents, plans, specifications, builder or installer certification, inspection reports, or other methods acceptable to the enforcing agency which demonstrate substantial conformance. When specific documentation or special inspection is necessary to verify compliance, that method of compliance will be specified in the appropriate section or identified applicable checklist.

DISCLAIMER: *THIS DOCUMENT IS PROVIDED AND INTENDED TO BE USED AS A MEANS TO INDICATE AREAS OF COMPLIANCE WITH THE CALIFORNIA GREEN BUILDING STANDARDS (CALGREEN) CODE. DUE TO THE VARIABLES BETWEEN BUILDING DEPARTMENT JURISDICTIONS, THIS CHECKLIST IS TO BE USED ON AN INDIVIDUAL PROJECT BASIS AND MAY BE MODIFIED BY THE END USER TO MEET THOSE INDIVIDUAL NEEDS. THE END USER ASSUMES ALL RESPONSIBILITY ASSOCIATED WITH THE USE OF THIS DOCUMENT, INCLUDING VERIFICATION WITH THE FULL CODE.*

6/15/2021 11:49:13 PM C:\Users\User\Documents\20093 - Aries, 24x40 PC - MainFile - Low Seismic_6.7_CESAR24D63.rvt

PROJECT SPECIFIC STATE AGENCY APPROVAL
IDENTIFICATION STAMP
DIV. OF THE STATE ARCHITECT
APP: 02-123433 INC:
REVIEWED FOR
SS ☑ FLS ☑ ACS ☑
DATE: 01/20/2026

R&S TAVARES ASSOCIATES
DESIGN ♦ CONSULTING ♦ PROJECT MGT
11590 W Bernardo Court, Suite 100
San Diego, CA 92127
www.rstavares.com

PROFESSIONAL STAMP
REGISTERED PROFESSIONAL ENGINEER JANNY D. FRANCISCO-NETTER No. 63380 03/31/24 STRUCTURAL STATE OF CALIFORNIA
RST#22088
02/16/24

THE PLANS, IDEAS & DESIGNS SHOWN ON THESE DRAWINGS ARE THE PROPERTY OF R&S TAVARES ASSOCIATES, INC. DEVISED SOLELY FOR THIS CONTRACT. THESE PLANS SHALL NOT BE USED, IN WHOLE OR IN PART, FOR ANY PURPOSE FOR WHICH THEY WERE NOT INTENDED WITHOUT THE EXPRESS WRITTEN CONSENT OF R&S TAVARES ASSOCIATES, INC. ©

CLIENT
Class Leasing
1651Juanita Street, San Jacinto, CA 92583
Voice (951) 943-1908 Fax (951)943-5768

ORIGINAL PC STATE AGENCY APPROVAL
APPROVED
DIV. OF THE STATE ARCHITECT
APP: 04-123059 PC
REVIEWED FOR
SS ☑ FLS ☑ ACS ☑ CG ☑
DATE: 02/20/2024

Revision Schedule

#	Description	Date

PRE-CHECK (PC) DOCUMENT

Code: 2022 CBC

A separate project application for construction is required

PROJECT TITLE
PC 2022 CBC: 24' x 40' EXPANDABLE TO 120' x 40'

SHEET TITLE
CAL GREEN CHECKLIST

PROJECT NUMBER
22088

DRAWN BY
rMc/SC

CHECKED BY
RH/RT

DATE

SHEET NO.
A0.8
SHEET OF

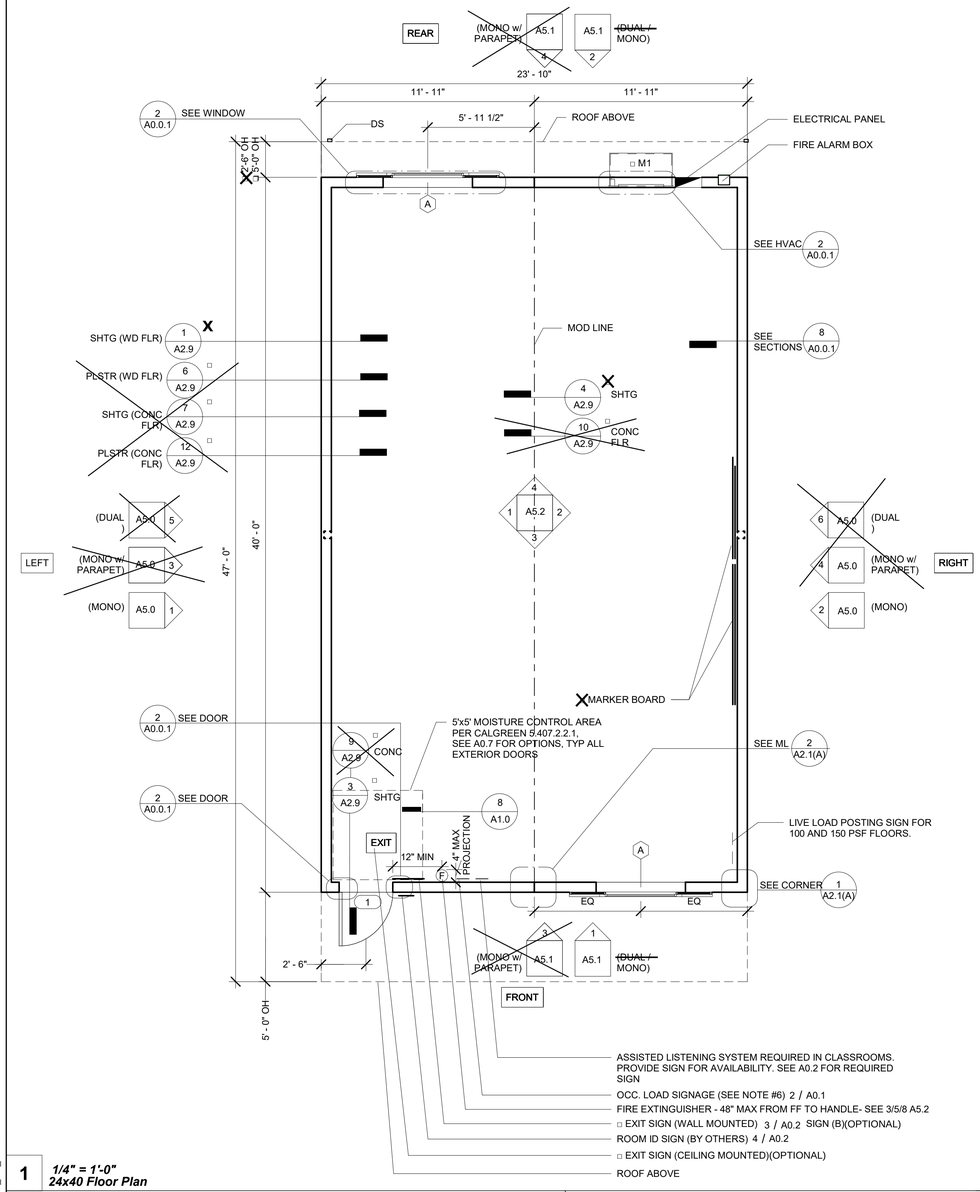

1 *1/4" = 1'-0"*
24x40 Floor Plan

All rated construction (both vertical and horizontal) must be clearly defined, correctly indentified, detailed, and listed in accordance with CBC Chapters 3,5,7 and 10 (fire partitions, barriers, walls, shaft, egress protection, ceilings, opening protection, penetrations, structural members, etc). Provide and cross-reference installation details, including all components and attachment schedules for the fire-resistive materials to the framing. Shall conform in every particular with the design number specified

SECTION 915
CARBON MONOXIDE DETECTION

915.4 Carbon monoxide alarms. Carbon monoxide alarms shall comply with Sections 915.4.1 through 915.4.4.

[F] 915.4.1 Power source. Carbon monoxide alarms shall receive their primary power from the building wiring where such wiring is served from a commercial source, and when primary power is interrupted, shall receive power from a battery. Wiring shall be permanent and with-out a disconnecting switch other than that required forovercurrent protection.

915.2.3 Group E occupancies. Carbon monoxide detection shall be installed in classrooms in Group E occu-pancies. Carbon monoxide alarm signals shall be automat-ically transmitted to an on-site location that is staffed byschool personnel.

915.3 Detection equipment. Carbon monoxide detection required by Sections 915.1 through 915.2.3 shall be provided by carbon monoxide alarms complying with Section 915.4 or carbon monoxide detection systems complying with Section 915.5.

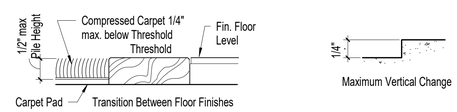

8 *1/4" = 1'-0"*
VCT TO CARPET DETAIL

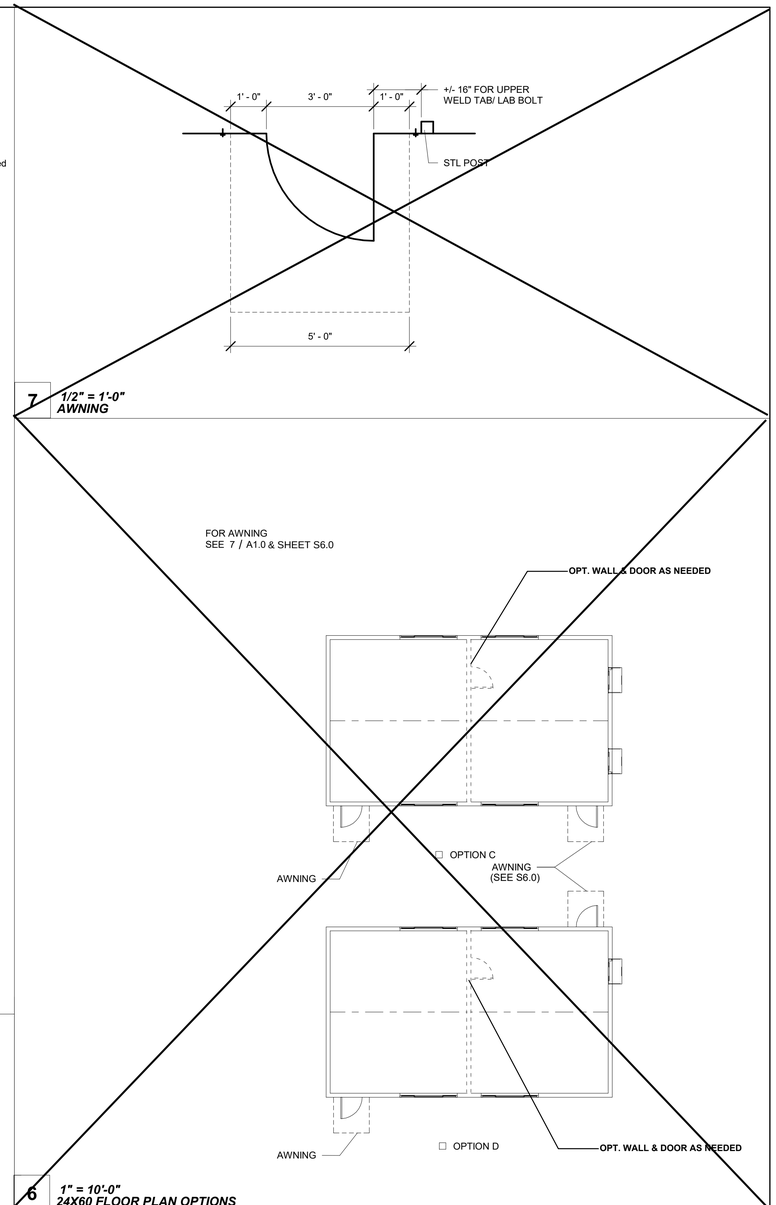

7 *1/2" = 1'-0"*
AWNING

6 *1" = 10'-0"*
24X60 FLOOR PLAN OPTIONS

Wall Schedule

	Stud Size	Sheet	Notes
X	Wood Wall Stud	S4.5	

FOR BURNING CHARACTERISTIC SEE 3 / A0.1

5 *1/4" = 1'-0"*
Wall Schedule

Fire Rating Schedule

	Rating	Sheet	Notes
□	1 HOUR - SIDING OVER WD STUDS	A2.5	
□	1 HOUR - PLASTER OVER 1/2" OSB OR 1/2" CDX PLY w/ WD STUDS	A2.6	

SEE A3.0 FOR ADDITIONAL FIRE ASSEMBLY NOTES AND DETAILS

4 *1/4" = 1'-0"*
Fire Rating Schedule

Ext. Finish Schedule

	Finishes	Sheet	Notes
X	SIDING OVER WD STUDS	A2.1	
□	PLASTER OVER 1/2" OSB OR 1/2" CDX PLY w/ WD STUDS	A2.2	

3 *1/4" = 1'-0"*
Ext. Finish Schedule

Roofing Schedule

"SLOPE"	EDPM	Standing Seam	Parapet	Notes
Dual	□ A4.2.2	□ A4.0.2	N/A	
Mono	□ A4.2.1	X A4.0.1	□ A4.4.1	

HVAC Unit

Keynote	Type	Type Comments
X M1	Wall Mounted HVAC	See (M)-Sheets
□ M2	Roof Mounted HVAC	See (M)-Sheets

PROJECT SPECIFIC STATE AGENCY APPROVAL

IDENTIFICATION STAMP
DIV. OF THE STATE ARCHITECT
APP: 02-123433 INC:
REVIEWED FOR
SS ☑ FLS ☑ ACS ☑
DATE: 01/20/2026

R&S TAVARES ASSOCIATES
DESIGN ♦ CONSULTING ♦ PROJECT MGT
11590 W Bernardo Court, Suite 100
San Diego, CA 92127
www.rstavares.com

PROFESSIONAL STAMP

REGISTERED PROFESSIONAL ENGINEER
MANNY D. FRANCISCO
No. 93380
Exp. 03/31/24
STRUCTURAL
STATE OF CALIFORNIA
RST#22088
02/16/24

THE PLANS, IDEAS & DESIGNS SHOWN ON THESE DRAWINGS ARE THE PROPERTY OF R&S TAVARES ASSOCIATES, INC. DEVISED SOLELY FOR THIS CONTRACT. THESE PLANS SHALL NOT BE USED, IN WHOLE OR IN PART, FOR ANY PURPOSE FOR WHICH THEY WERE NOT INTENDED WITHOUT THE EXPRESS WRITTEN CONSENT OF R&S TAVARES ASSOCIATES, INC. ©

CLIENT

Class Leasing
1651Juanita Street, San Jacinto, CA 92583
Voice (951) 943-1908 Fax (951)943-5768

ORIGINAL PC STATE AGENCY APPROVAL

APPROVED
DIV. OF THE STATE ARCHITECT
APP: 04-123059 PC
REVIEWED FOR
SS ☑ FLS ☑ ACS ☑ CG ☑
DATE: 02/20/2024

Revision Schedule

#	Description	Date

PRE-CHECK (PC) DOCUMENT

Code: 2022 CBC

A separate project application for construction is required

PROJECT TITLE
PC 2022 CBC: 24' x 40' EXPANDABLE TO 120' x 40'

SHEET TITLE
24x40 FLOOR PLAN

PROJECT NUMBER
22088

DRAWN BY
rMc/SC

CHECKED BY
RH/RT

DATE

SHEET NO.
A1.0

SHEET OF

6/15/2021 11:49:18 PM C:\Users\User\Documents\20093 - Aries, 24x40 PC - MainFile - Low Seismic_6.7_CESAR24D63.rvt

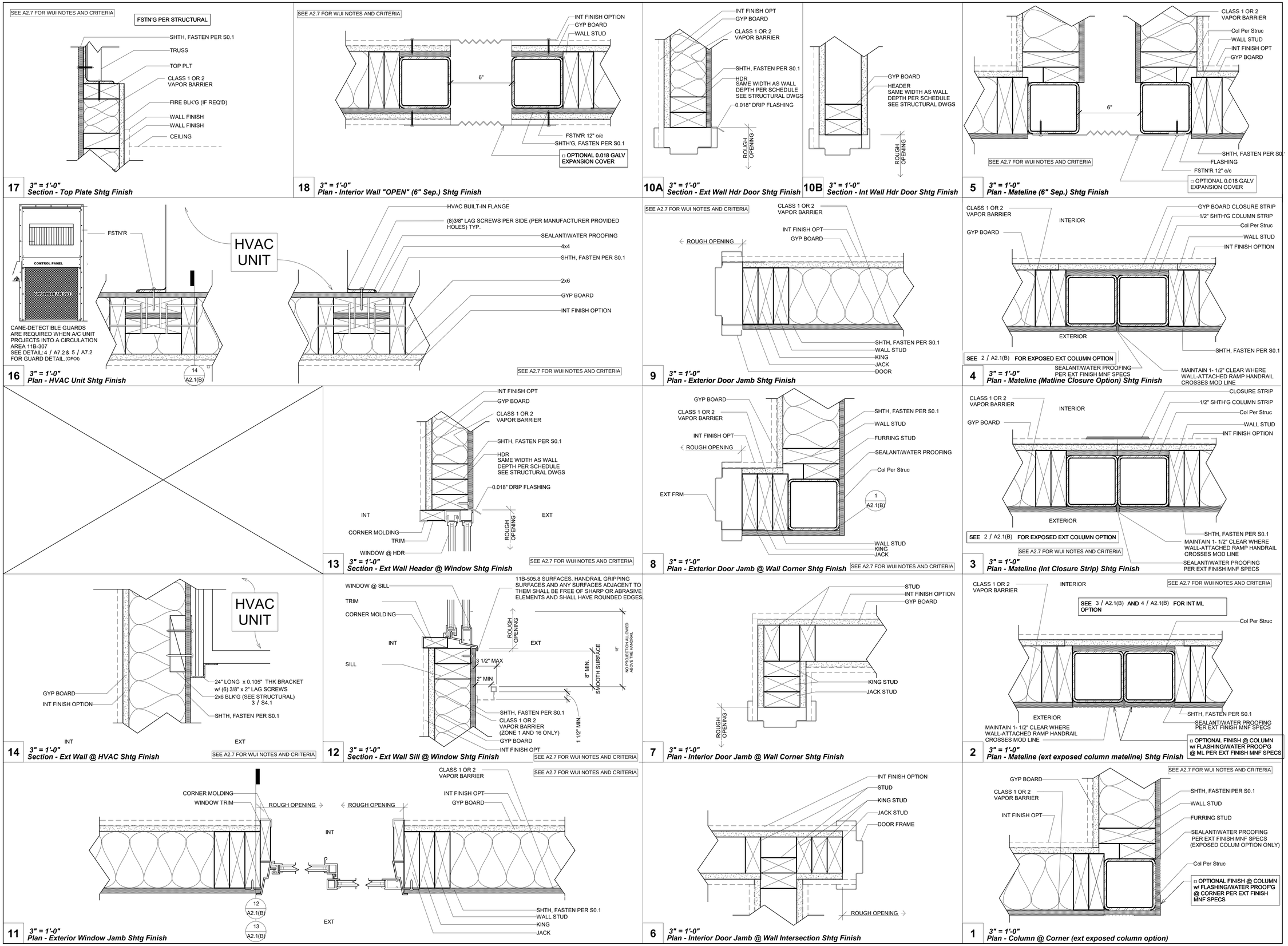

PROJECT SPECIFIC STATE AGENCY APPROVAL

IDENTIFICATION STAMP
DIV. OF THE STATE ARCHITECT
APP: 02-123433 INC:
REVIEWED FOR
SS ☑ FLS ☑ ACS ☑
DATE: 01/20/2026

R&S TAVARES ASSOCIATES
DESIGN ◆ CONSULTING ◆ PROJECT
11777 BERNARDO PLAZA COURT, SUITE 105
SAN DIEGO, CA 92128

PROFESSIONAL STAMP

REGISTERED PROFESSIONAL ENGINEER
MANNY D. FRANCISCO
No. 63380
Exp. 03/31/24
STRUCTURAL
STATE OF CALIFORNIA
RST#22088
02/16/24

THE PLANS, IDEAS & DESIGNS SHOWN ON THESE DRAWINGS ARE THE PROPERTY OF R&S TAVARES ASSOCIATES, INC. DEVISED SOLELY FOR THIS CONTRACT. THESE PLANS SHALL NOT BE USED, IN WHOLE OR IN PART, FOR ANY PURPOSE FOR WHICH THEY WERE NOT INTENDED WITHOUT THE EXPRESS WRITTEN CONSENT OF R&S TAVARES ASSOCIATES, INC. ©

CLIENT

Class Leasing
1651Juanita Street, San Jacinto, CA 92583
Voice (951) 943-1908 Fax (951)943-5768

ORIGINAL PC STATE AGENCY APPROVAL

APPROVED
DIV. OF THE STATE ARCHITECT
APP: 04-123059 PC
REVIEWED FOR
SS ☑ FLS ☑ ACS ☑ CG ☑
DATE: 02/20/2024

Revision Schedule

#	Description	Date

PRE-CHECK (PC) DOCUMENT

Code: 2022 CBC

A separate project application for construction is required

PROJECT TITLE

PC 2022 CBC: 24' x 40' EXPANDABLE TO 120' x 40'

SHEET TITLE

ARCHITECTURAL WUI DETAILS (WOOD FRAMING SHTG FINISH)

PROJECT NUMBER 22088

DRAWN BY rMc/SM

CHECKED BY JA/RT

DATE

SHEET NO. A2.1(B)

SHEET OF

C:\Users\User\Documents\20093 - Aries, 24x40 PC - MainFile - Low Seismic_6.7_CESAR24D63.rvt

6/15/2021 11:49:36 PM

Roof
Shall comply with the requirements of Chapter 7A and Chapter 15. Roofs shall have a roofing assembly installed in accordance with its listing and the manufacturer's installation instructions. Roof assemblies in the Fire Hazard Severity Zones shall be Class A rating when tested in accordance with ASTM E108 or UL790

Roof gutters
Shall be provided with the means to prevent the accumulation of leaves and debris in the gutter.

Exterior wall
The exterior wall covering or wall assembly shall comply with one of the following requirements:
Noncombustible material.
Ignition-resistant material.
Sawn lumber or glue laminated wood with the smallest minimum nominal dimension of 4 inches (102 mm). Sawn or glue-laminated planks splined, tongue-and groove, or set close together and well spiked.
Log wall construction assembly.
Wall assemblies that have been tested in accordance with the test procedures for a 10-minute direct flame contact exposure test set forth in ASTM E2707 with the conditions of acceptance shown in Section 707A.3.1.
Wall assemblies that meet the performance criteria in accordance with the test procedures for a 10-minute direct flame contact exposure test set forth in SFM Standard 12-7A-1.

Exterior windows
Exterior windows and exterior glazed door assemblies shall comply with one of the following requirements:
* Be constructed of multi pane glazing with a minimum of one tempered pane meeting the requirements of CBC Section 2406 Safety Glazing, or
* Be constructed of glass block units, or
* Have a fire-resistance rating of not less than 20 minutes when tested according to NFPA 257, or Be tested to meet the performance requirements of SFM Standard 12-7A-2.

Exterior doors
Exterior doors shall comply with one of the following:
The exterior surface or cladding shall be of noncombustible material.
The exterior surface or cladding shall be of ignition-resistant material.
The exterior door shall be constructed of solid core wood that complies with the following requirements:
Stiles and rails shall not be less than 13/8 inches thick.
Panels shall not be less than 11/4 inches thick, except for the exterior perimeter of the panel that shall be permitted to taper to a tongue not less than 3/8 inch thick.
The exterior door assembly shall have a fire-resistance rating of not less than 20 minutes when tested according to NFPA 252.
The exterior surface or cladding shall be tested to meet the performance requirements of Section 707A.3.1 when tested in accordance with ASTM E2707.
The exterior surface or cladding shall be tested to meet the performance requirements of SFM Standard 12-7A-1

WILDFIRE URBAN INTERFACE (WUI) CRITERIA:

[PROJECT SPECIFIC BUILDING REQUIREMENTS FOR FIRE HAZARD SEVERITY ZONE CBC CHAPTER 1A.

1) ROOF COVERING: (C.B.C SECTION 705A)
26GA GALV STEEL (NON-COMBUSTIBLE) INTERLOCKED STANDING SEAM ROOF PANEL WITH NO SPACE BETWEEN ROOF PANELS AND ROOF DECKING. STANDING SEAM ROOF OVER ONE LAYER#15 ROOF FELT. (CBC 705A.2)

2) ROOF GUTTERS: (C.B.C SECTION 705A.4)
SHALL BE SCREENED WITH A CORROSION RESISTANT NON COMBUSTIBLE WIRE MESH WITH 1/4" OPENING. (OR EQUAL)

3) SOFFITS: (C.B.C SECTION 707A.5)
ROSEBURG DURATEMP SIDING. (OR EQUAL)

4) EXTERIOR WALL FINISH: (C.B.C SECTION 707A.3)
ROSEBURG DURATEMP SIDING (OR EQUAL) PER CALIFORNIA DEPARTMENT OF FORESTRY AND FIRE PROTECTION OFFICE OF STATE FIRE MARSHALL PRODUCTS HANDBOOK PUBLISHED BY CALFIRE DECEMBER 14, 2021.

5) VERTICAL EXTERIOR WALL VENTS & SOFFIT VENTS: (C.B.C SEC. 706A.2)
SCREENED WITH A CORROSION RESISTANT NON COMBUSTIBLE WIRE MESH WITH 1/16" (1.6MM) MIN. OPENINGS AND NOT TO EXCEDD 1/8" (3.2MM)

6) EXTERIOR WINDOWS: (C.B.C SECTION 708A.2.1)
METAL FRAME, TEMPERED GLASS, OR ASSEMBLE OF FIRE RESIST OF NOT LESS THAN 20 MINUTES.

7) EXTERIOR DOORS: (C.B.C SECTION 708.3)
NON COMBUSTIBLE METAL DOORS AND FRAME.
ASSEMBLY OF FIRE RESIST OF NOT LESS THAN 20 MINUTES

1 ***1/4" = 1'-0"***
WUI NOTES

PROJECT SPECIFIC STATE AGENCY APPROVAL

IDENTIFICATION STAMP
DIV. OF THE STATE ARCHITECT
APP: 02-123433 INC:
REVIEWED FOR
SS ☑ FLS ☑ ACS ☑
DATE: 01/20/2026

R&S TAVARES ASSOCIATES
DESIGN ★ CONSULTING ★ PROJECT MGT
11590 W BERNARDO COURT, SUITE 100
SAN DIEGO, CA 92127
WWW.RSTAVARES.COM

PROFESSIONAL STAMP

REGISTERED PROFESSIONAL ENGINEER
MANNY D. FRONTADA
No. 23380
Exp. 03/31/24
STRUCTURAL
STATE OF CALIFORNIA

02/16/24

THE PLANS, IDEAS & DESIGNS SHOWN ON THESE DRAWINGS ARE THE PROPERTY OF R&S TAVARES ASSOCIATES, INC. DEVISED SOLELY FOR THIS CONTRACT. THESE PLANS SHALL NOT BE USED, IN WHOLE OR IN PART, FOR ANY PURPOSE FOR WHICH THEY WERE NOT INTENDED WITHOUT THE EXPRESS WRITTEN CONSENT OF R&S TAVARES ASSOCIATES, INC. ©

CLIENT

Class Leasing
1651 SOUTH JUANITA STREET
SAN JACINTO CA. 92581
VOICE (951) 943-1908 FAX (951)943-5768

ORIGINAL PC STATE AGENCY APPROVAL

APPROVED
DIV. OF THE STATE ARCHITECT
APP: 04-123059 PC
REVIEWED FOR
SS ☑ FLS ☑ ACS ☑ CG ☑
DATE: 02/20/2024

Revision Schedule

#	Description	Date

PRE-CHECK (PC) DOCUMENT

CODE: 2019 CBC

A separate project application for construction is required

PROJECT TITLE
PC 2022 CBC: 24' x 40' EXPANDABLE TO 120' x 40'

SHEET TITLE
WUI NOTES AND CRITERIA

PROJECT NUMBER
22088

DRAWN BY
Author

CHECKED BY
Checker

DATE
06/15/2021

SHEET NO.
A2.7

SHEET OF

10/30/2023 10:20:14 AM C:\Users\User\Documents\22088- Aries, 24x40 PC - MainFile - Low Seismic_detached (2022)_CESAR24D63.rvt

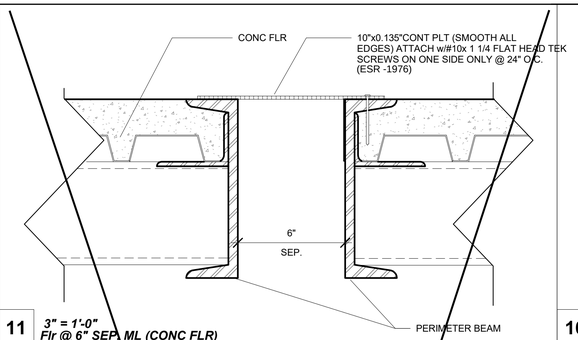

11 *3" = 1'-0"*
Flr @ 6" SEP. ML (CONC FLR)

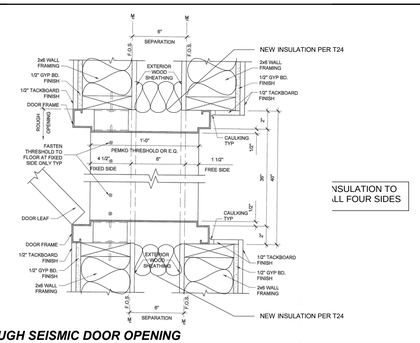

16 *PASS THROUGH SEISMIC DOOR OPENING*

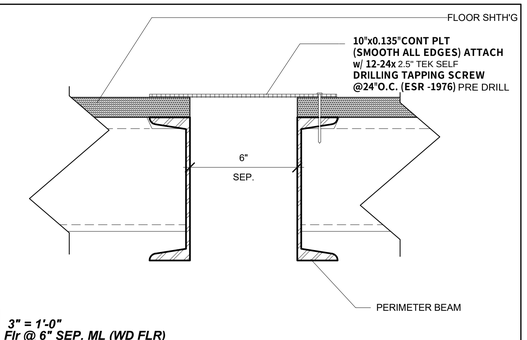

5 *3" = 1'-0"*
Flr @ 6" SEP. ML (WD FLR)

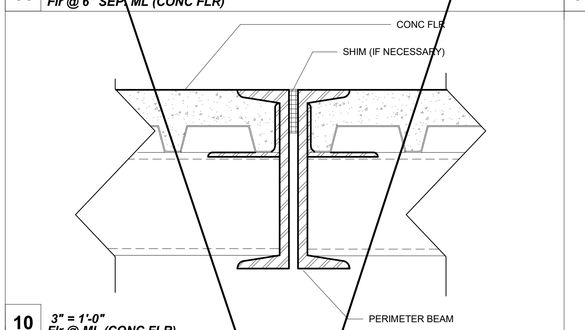

10 *3" = 1'-0"*
Flr @ ML (CONC FLR)

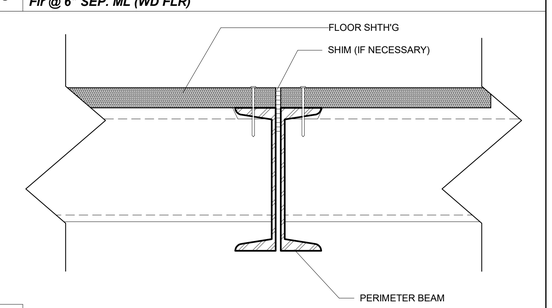

4 *3" = 1'-0"*
Flr @ ML (WD FLR)

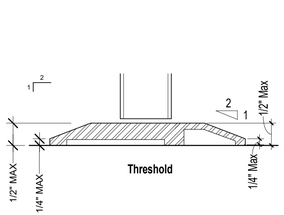

15 *1/4" = 1'-0"*
THRESHOLD DETAIL

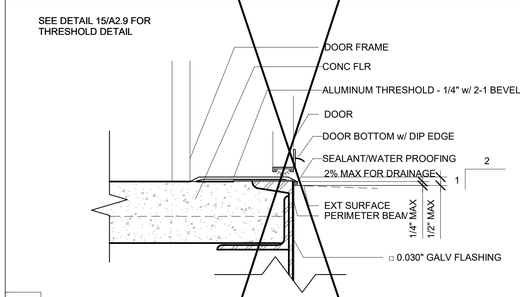

9 *3" = 1'-0"*
*Typ Sill Plate @ Threshold (CONC FLR)**

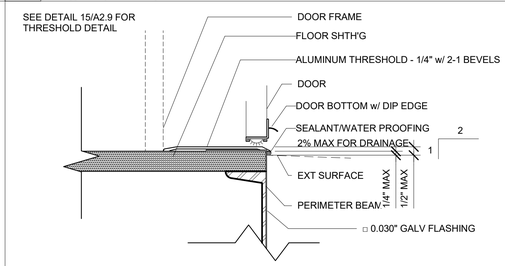

3 *3" = 1'-0"*
*Typ Sill Plt @ Threshold (WD FLR)**

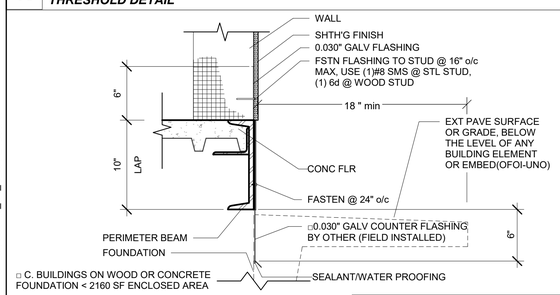

14 *1 1/2" = 1'-0"*
Typ Skirt @ Fnd SHTH'G FIN

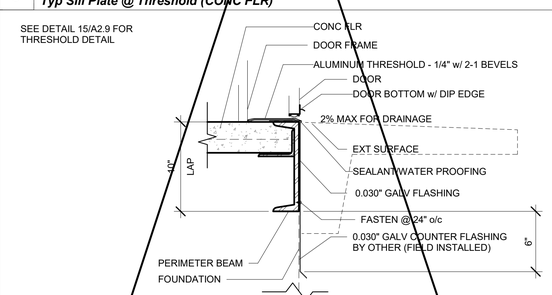

8 *1 1/2" = 1'-0"*
*Threshold @ Fnd (CONC FLR)**

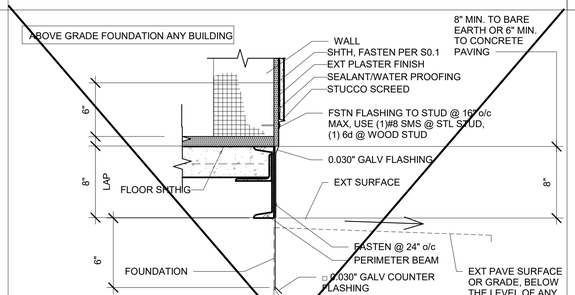

13 *1 1/2" = 1'-0"*
Typ Skirt @ Fnd PLSTR FIN

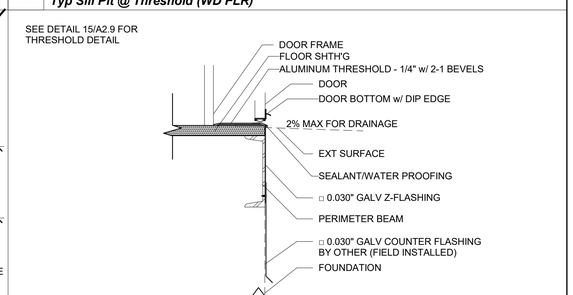

2 *1 1/2" = 1'-0"*
*Threshold @ Fnd (WD FLR)**

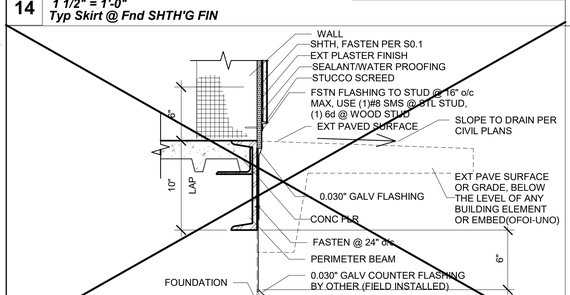

12 *1 1/2" = 1'-0"*
*Typ Skirt @ Fnd PLSTR FIN (CONC FLR)**

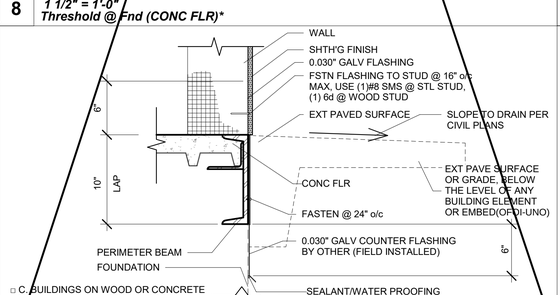

7 *1 1/2" = 1'-0"*
*Typ Skirt @ Fnd SHTH'G FIN (CONC FLR)**

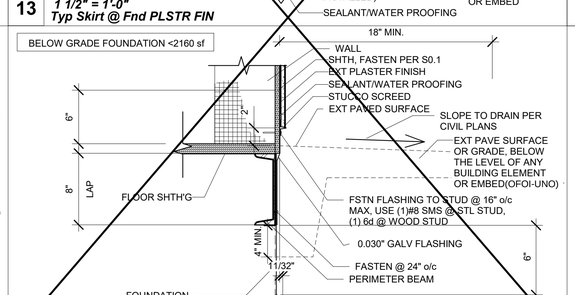

6 *1 1/2" = 1'-0"*
*Typ Skirt @ Fnd PLSTR FIN (WD FLR)**

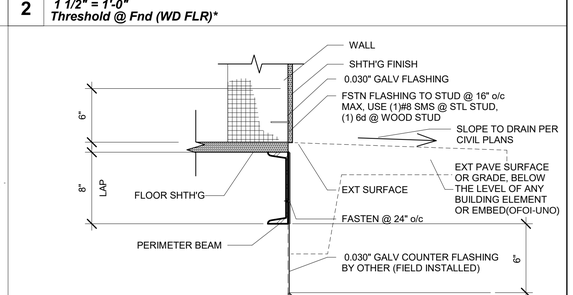

1 *1 1/2" = 1'-0"*
*Typ Skirt @ Fnd SHTH'G FIN (WD FLR)**

PROJECT SPECIFIC STATE AGENCY APPROVAL

IDENTIFICATION STAMP
DIV. OF THE STATE ARCHITECT
APP: 02-123433 INC: A
REVIEWED FOR
SS ☑ FLS ☑ ACS ☑
DATE: 01/20/2026

R&S TAVARES ASSOCIATES
DESIGN ★ CONSULTING ★ PROJECT MGT
11590 W BERNARDO COURT, SUITE 100
SAN DIEGO, CA 92127
WWW.RSTAVARES.COM

PROFESSIONAL STAMP

REGISTERED PROFESSIONAL ENGINEER
MANNY D. FRANCISCO
No. 63380
Exp. 03/31/24
STRUCTURAL
STATE OF CALIFORNIA
RST#22088
02/16/24

THE PLANS, IDEAS & DESIGNS SHOWN ON THESE DRAWINGS ARE THE PROPERTY OF R&S TAVARES ASSOCIATES, INC. DEVISED SOLELY FOR THIS CONTRACT. THESE PLANS SHALL NOT BE USED, IN WHOLE OR IN PART, FOR ANY PURPOSE FOR WHICH THEY WERE NOT INTENDED WITHOUT THE EXPRESS WRITTEN CONSENT OF R&S TAVARES ASSOCIATES, INC. ©

CLIENT

Class Leasing
1651Juanita Street, San Jacinto, CA 92583
Voice (951) 943-1908 Fax (951)943-5768

ORIGINAL PC STATE AGENCY APPROVAL

APPROVED
DIV. OF THE STATE ARCHITECT
APP: 04-123059 PC
REVIEWED FOR
SS ☑ FLS ☑ ACS ☑ CG ☑
DATE: 02/20/2024

Revision Schedule

#	Description	Date

PRE-CHECK (PC) DOCUMENT

Code: 2022 CBC

A separate project application for construction is required

PROJECT TITLE
PC 2022 CBC: 24' x 40' EXPANDABLE TO 120' x 40'

SHEET TITLE
ARCHITECTURAL DETAILS (FLOOR)

PROJECT NUMBER
22088

DRAWN BY
rMc/SC

CHECKED BY
RH/RT

DATE

SHEET NO.
A2.9

SHEET OF

C:\Users\User\Documents\20093 - Aries, 24x40 PC - MainFile - Low Seismic_6_7_CES\R24D63.rvt
6/15/2021 11:50:20 PM

System No. W-L-2448

February 26, 2008
F Ratings – 1 or 2 Hr (See Item 1)
T Rating – 0 Hr
L Rating At Ambient – 4 CFM/sq ft. (See Item 3B)
L Rating At 400 F – Less Than 1 CFM/sq ft. (See Item 3B)

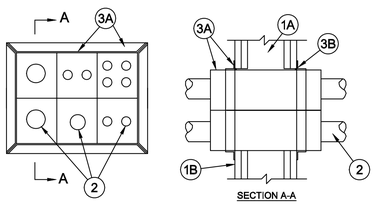

SECTION A-A

1. **Wall Assembly**– The 1 or 2 hr fire rated gypsum board/stud wall assembly shall be constructed of the materials and in the manner described in the individual U300, U400 or V400 Series Wall and Partition Design in the UL Fire Resistance Directory and shall include the following construction features:
   A. **Studs**– Wall framing may consist of either wood or steel channel studs. Wood studs to consist of nom 2 by 4 in. (51 by 102 mm) lumber spaced 16 in. (406 mm) OC. Steel studs to be min 3-1/2 in. (89 mm) wide spaced max 24 in. (610 mm) OC.
   B. **Gypsum Board** – The gypsum board type, thickness, number of layers, fastener type and sheet orientation shall be as specified in the individual Wall and Partition Design in the UL Fire Resistance Directory. Max area of opening is 98.5 in.2 (635 cm2) with a max dimension of 12-1/8 in. (308 mm) for square devices. Max diam of opening is 2-1/4 in. (57 mm) for nom 2 in. (51 mm) round devices and 4-1/4 in. (108 mm) for 4 in. (102 mm) round devices.

   The hourly F Rating of the firestop system is equal to the hourly fire rating of the wall assembly in which it is installed.
2. **Through Penetrants** One or more nonmetallic pipes, conduits or tubes, as described in a single line item below, may be installed concentrically or eccentrically within each firestop device (Item 3A) without any limitations on annular space. If multiple through penetrations are installed within the firestop device, the through penetrants may be bundled together. Through penetrants to be rigidly supported on both sides of wall assembly. The following types and sizes of through penetrants may be used:
   A. **Polyvinyl Chloride (PVC) Pipe**-One nom 2 in. (51 mm) diam (or smaller) Schedule 40 solid core PVC pipe for use in closed (process or supply) or vented (drain, waste or vent) piping systems.
   B. **Rigid Nonmetallic Conduit** – One nom 2 in. (51 mm) diam (or smaller) Schedule 40 PVC conduit installed in accordance with Article 352 of the National Electrical Code (NFPA No. 70).
   See **Rigid Nonmetallic, Schedule 40 and 80 PVC Conduit** (DXTR) category in the Electrical Construction Equipment Directory for names of manufacturers.
   C. **Chlorinated Polyvinyl Chloride (CPVC) Pipe**-One nom 2 in. (51 mm) diam (or smaller) SDR11 CPVC pipe for use in closed (process or supply) piping systems.
   D. **Crosslinked Polyethylene (PEX) Tubing**-One nom 2 in. (51 mm) diam (or smaller) SDR 9 PEX tubing for use in closed (process or supply) piping systems.
   E. **Electrical Nonmetallic Tubing (ENT)**– Max four nom 1-1/4 in. (32 mm) diam (or smaller) ENT installed in accordance with Article 362 of the National Electrical Code (NFPA No. 70).
   See **Electrical Nonmetallic Tubing** (QKHU) category in the Electrical Construction Equipment Directory for names of manufacturers.
   F. **Optical Fiber/Communications/Signaling/Coaxial Cable Raceway**-Max four nom 1-1/4 in. (32 mm) diam (or smaller) plenum rated raceways installed in accordance with the National Electrical Code (NFPA No. 70).
   See **Optical Fiber/Communications/Signaling/Coaxial Cable Raceway** (QWZM) category in the Electrical Construction Equipment Directory for names of manufacturers.
   G. **Acrylonitrile Butadiene Styrene (ABS) Pipe**-Nom 2 in. (51 mm) diam (or smaller) Schedule 40 solid or cellular core ABS for use in closed (process or supply) or vented (drain, waste or vent) piping systems
3. **Firestop System** The firestop system shall consist of the following:
   A. **Firestop Device**– A max of six square firestop devices may be ganged together. As an alternate, one round device may be centered within a round opening. Each device consists of a nom 2-1/2 by 2-1/2 by 10 in. (64 by 64 by 254 mm), a nom 4 by 4 by 10 in. (102 by 102 by 254 mm), a nom 2 in. (51 mm) diam by 10 in. (254 mm) or a nom 4 in. (102 mm) diam by 10 in. (254 mm) powder coated steel transit incorporating internal intumescent material, foam plugs and mounting flanges. Firestop device(s) to be installed within opening with ends projecting an equal distance beyond each surface of wall assembly in accordance with the accompanying installation instructions. The annular space between device(s) and periphery of opening shall be min 0 in. (0 mm, point contact) to max 1/8 in. (3 mm). Firestop device(s) secured in place by means of fill material (Item 3B) and steel split mounting flanges sized to accommodate the firestop device. Steel split mounting flanges installed on both sides of wall after installation of fill material, and secured together with supplied steel set screws. Nom 1 in. (25 mm) thick pre-cut foam plugs sized to accommodate the through penetrant(s) and installed flush with each end of device on both sides of wall assembly.

   3M COMPANY – 3M Fire Barrier Pass-Through Device
   B. **Fill, Void or Cavity Materials**– **Putty or Caulk**– Min 1/8 in. (3 mm) bead of fill material shall be applied at interface of gypsum board and firestop devices immediately prior to the installation of the mounting flanges. As an option, foam plugs may be recessed into device and the recess filled with fill material flush with the ends of the device. If three or less devices (Item 3A) are ganged together, the fill material may be optional. L Rating applies only when fill material is applied at interface of gypsum board and device(s) prior to mounting flanges and with both ends of firestop device(s) filled with nominal 1/8 in. (3.2 mm) of Moldable Putty+.

   3M COMPANY – Moldable Putty+, CP 25WB+, IC 15WB+, 3000 WT

+ Bearing the UL Listing Mark
*Bearing the UL Classification Mark

Reprinted from the Online Certifications Directory with permission from Underwriters Laboratories Inc.
Copyright © 2011 Underwriters Laboratories Inc.®

Reproduced by Hilti Firestop Systems
Courtesy of Underwriters Laboratory, Inc.
Through-Penetration Firestop Systems

System No. WL 5029
F-Rating - 1 or 2 Hr (See Item 1)
T-Rating - $\frac{1}{2}$, $\frac{3}{4}$, $1\frac{1}{2}$ and 1-$\frac{3}{4}$ Hr (See Item 3)
L Rating at Ambient = 4 CFM/Sq.Ft.
L Rating at 400°F = Less Than 1 CFM/Sq.Ft.

February 8, 2006

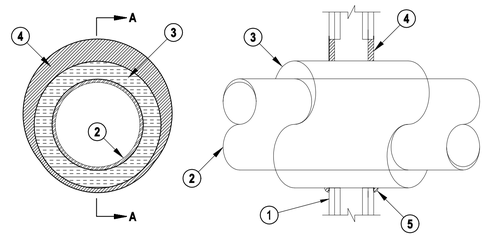

SECTION A-A

1. Wall Assembly — The 1 or 2 hr fire-rated gypsum board/stud wall assembly shall be constructed of the materials and in the manner specified in the individual U300 or U400 Series Wall and Partition Designs in the UL Fire Resistance Directory and shall include the following construction features:
   A. Studs — Wall framing may consist of either wood studs or steel channel studs. Wood studs to consist of nom 2 by 4 in. lumber spaced 16 in. OC. Steel studs to be min 2-1/2 in. wide and spaced 24 in. OC.
   B. Gypsum Board — 5/8 in. thick, 4 ft wide, with square or tapered edges. The gypsum board type, thickness, number of layers, fastener type and sheet orientation shall be as specified in the individual Wall and Partition Designs. Max diam of opening is 13-5/8 in.

   The hourly F Rating of the firestop system is equal to the hourly fire rating of the wall assembly in which it is installed.
2. Through Penetrants — One metallic pipe or tubing to be centered within the firestop system. Pipe or tubing to be rigidly supported on both sides of wall assembly. The following types and sizes of metallic pipes or tubing may be used:
   A. Steel Pipe — nom 12 in. diam (or smaller) Schedule 10 (or heavier) steel pipe.
   B. Iron Pipe — nom 12 in. diam (or smaller) Schedule 40 (or heavier) iron pipe.
   C. Copper Tubing — nom 6 in. diam (or smaller) Type L (or heavier) copper tubing.
   D. Copper Pipe — nom 6 in. diam (or smaller) Regular (or heavier) copper pipe.
   E. Pipe Covering* — nom 1, 1-1/2 or 2 in. thick hollow cylindrical heavy density (min 3.5 pcf) glass fiber units jacketed on the outside with an all service jacket. Longitudinal joints sealed with metal fasteners or factory-applied self-sealing lap tape. Trans-erse joints secured with metal fasteners or with butt tape supplied with the product.

See Pipe and Equipment Covering — Materials (BRQU) category in the Building Material Directory for the names of manufacturers. Any pipe covering material meeting the above specifications and bearing the UL Classification Marking with a Flame Spread Index of 25 or less and a Smoke Developed Index of 50 or less may be used.
The hourly T Rating of the firestop system is dependent on the hourly fire rating of the wall assembly in which it is installed, the size and type of through penetrant and the pipe covering thickness, as shown in the table below:

Wall Assembly Rating Hr	Through Penetrant		Pipe Covering Thkns In.	Annular Space		T Rating Hr
	Type +	Max Diam In.		Min In.	Max In.	
1	A	4	1	0	1-1/2	1/2
1	B or C	2	1 or 1-1/2	0	1-1/2	1/2
1	A	4	1-1/2	0	1-1/2	1
1	A	12	2	0	1-7/8	3/4
1	B or C	6	2	0	1-7/8	1
2	A	4	1	0	1-1/2	1
2	B or C	4	1 or 1-1/2	0	1-1/2	1
2	B or C	6	2	0	1-7/8	1
2	A	4	1-1/2	0	1-1/2	1-3/4
2	A	12	2	0	1-7/8	1-1/2
2	B or C	6	2	0	1-7/8	1

+ Indicates penetrant type as itemized in Item 2.
3A. Pipe Covering* — (not Shown) — As an alternate to item 3, max 2 in. thick cylindrical calcium silicate (min 14 pcf) units slized to the outside diam of the pipe or tube may be used. Pipe insulation secured with stainless steel bands or min 8 AWG stainless steel wire spaced max 12 in. OC. When the alternate pipe covering is used, the T Rating shall be determined from the table above.
See Pipe and Equipment Covering — Materials (BRQU) category in the Building Materials Directory for names of manufacturers. Any pipe covering material meeting the above specifications and bearing the UL Classification Marking with a Flame Spread Index of 25 or less and a Smoke Developed Index of 50 or less may be used.
4. Fill, Void or Cavity Material — Sealant — Min 5/8 in. thickness of fill material applied within the annulus, flush with both surfaces of wall . At the point contact location between pipe covering and cellular core PVC pipe, min 1/8 in. (3 mm) bead of fill material shall be applied at the pipe covering/gypsum board interface on both surfaces of wall.
HILTI CONSTRUCTION CHEMICALS, DIV OF HILTI INC — FS-ONE Sealant
*Bearing the UL Classification Mark

Guide XHEZ
Through-Penetration Firestop Systems

(12/08/08)
F-C-2019 - A Card

System No. F-C-2019

F-Rating - 1 and 2 Hr (See Item 1); T-Rating - 1 and 2 Hr (See Item 1)
L Rating At Ambient - 1 CFM/sq ft; L Rating At 400 F - Less Than 1 CFM/sq ft

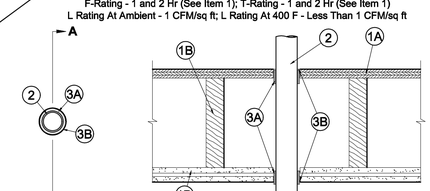

Section A-A

0. Floor-Ceiling Assembly — The 1 hr fire-rated solid or trussed lumber joist floor-ceiling assembly shall be constructed of the materials and in the manner specified in the individual L500 Series Floor-Ceiling Designs in the UL Fire Resistance Directory. The 2 hr fire-rated wood joist floor-ceiling assembly shall be constructed of the materials and in the manner specified in Design Nos. L505, L511 or L530 in the UL Fire Resistance Directory. The F and T Ratings of the firestop system are equal to the hourly fire rating of the floor-ceiling assembly. The general construction features of the floor-ceiling assembly are summarized below:
   A. Flooring System — Lumber or plywood subfloor with finish floor of lumber, plywood or Floor Topping Mixture* as specified in the individual Floor-Ceiling Design. Max diam of floor opening is 3 in. (76 mm).
   B. Wood Joists* — For 1 hr fire-rated floor-ceiling assemblies, nom 10 in. (254 mm) deep (or deeper) lumber, steel or combination lumber and steel joists, trusses or Structural Wood Members* with bridging installed in accordance with the manufacturer's instructions. For 2 hr fire-rated floor-ceiling assemblies, nom 8 by 10 in. (61 by 132 mm) lumber joists spaced 16 in. (406 mm) OC with nom 1 by 3 in. (25 by 76 mm) lumber bridging and with ends firestopped.
   C. Furring Channels — (Not Shown) — In 2 hr fire-rated assemblies, resilient galv steel furring installed perpendicular to wood joists between first and second layers of wallboard (Item 1D). Furring channels spaced max 24 in. (610 mm) OC. In 1 hr fire-rated assemblies, resilient galv steel furring installed perpendicular to wood joists between gypsum board and wood joists as specified in the individual Floor-Ceiling Design. Furring channels spaced max 24 in. (610 mm) OC.
   D. Gypsum Board* — Nom 4 ft (1220 mm) wide by 5/8 in. (16 mm) thick as specified in the individual Floor-Ceiling Design. First layer of gypsum board secured to wood joists or furring channels as specified in the individual Floor-Ceiling Design. Second layer of gypsum board (2 hr fire-rated assembly) screw-attached to furring channels as specified in the individual Floor-Ceiling Design. Max diam of ceiling opening is 12 in. (305 mm).
   E. Through Penetrants — One nonmetallic pipe or conduit to be installed approximately mid-way between wood joists and centered within the system. Diam of openings hole-sawed through flooring system and through gypsum board ceiling to be nom 5/8 in. (16 mm) larger than the outside diam of through-penetrant. Pipe or conduit to be rigidly supported on both sides of the floor-ceiling assembly. The following types and sizes of nonmetallic pipes or conduits may be used:
      A. Polyvinyl Chloride (PVC) Pipe — Nom 2 in. (51 mm) diam (or smaller) Schedule 40 solid or cellular core PVC pipe for use in closed (process or supply) or vented (drain, waste or vent) piping systems.
      B. Rigid Nonmetallic Conduit — Nom 2 in. (51 mm) diam (or smaller) Schedule 40 PVC conduit installed in accordance with Article 347 of the National Electrical Code (NFPA No. 70).
      C. Chlorinated Polyvinyl Chloride (CPVC) Pipe — Nom 2 in. (51 mm) diam (or smaller) SDR 13.5 CPVC pipe for use in closed (process or supply) piping systems.
      D. Electrical Nonmetallic Tubing (ENT) — Nom 2 in. (51 mm) diam (or smaller) ENMT formed from PVC and installed in accordance with Article 331 of the National Electrical Code.
   F. Fire Stop Device — Min 2 in. (51 mm) diameter.
   G. Fill, Void or Cavity Material* — Wrap Strip — Nom 1/8 or 3/16 in. (3.2 or 4.8 mm) thick intumescent material backed coat on both sides with a plastic film, supplied in 2 in. (51 mm) wide strips or nom 1/4 in. (6 mm) thick intumescent material faced on both sides with a plastic film, supplied in 1-1/2 in. (51 mm) wide strips. One layer of wrap strip is wrapped around the through-penetrant at its egress from both sides of the floor-ceiling assembly with ends butted and held in place with two layers of 2 in. (51 mm) wide by 3 mil (0.08 mm) thick aluminum foil tape. The bottom edge of the wrap strip shall extend 5/8 in. (16 mm) below the flooring system and 1/4 in. (6 mm) below the ceiling.
      SPECIFIED TECHNOLOGIES INC — SpecSeal BLJ Wrap Strip, SpecSeal BLJ2 Wrap Strip or SpecSeal RED Wrap Strip
   H. Fill, Void or Cavity Material* — Sealant — Fill material forced into annulus to fill space to max extent possible, flush with top surface of floor and bottom surface of ceiling.
      SPECIFIED TECHNOLOGIES INC — SpecSeal Series SSS Sealant or SpecSeal LCI Sealant

+ Bearing the UL Listing Mark *Bearing the UL Classification Marking

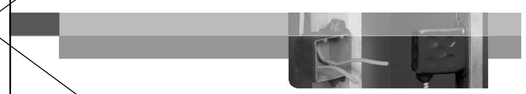

3M™ Fire Barrier Moldable Putty Pads MPP+

Product Data Sheet

1. Product Description

3M™ Fire Barrier Moldable Putty Pads MPP+ are a one-part, ready-to-use, intumescent wall-opening protective. When properly applied to the back of electrical outlet boxes, 3M™ Fire Barrier Moldable Putty Pads MPP+ help control the spread of fire, smoke and noxious gases through fire-resistive wall and partitions. Installed in accordance with the UL wall-opening protective listing (UL Category CLIV), the product helps achieve up to 2-hour ratings in a variety of wall constructions. 3M™ Fire Barrier Moldable Putty Pads MPP+ can effectively provide protection for back-to-back electrical boxes.

3M™ Fire Barrier Moldable Putty Pads MPP+ are also used as a firestop material in through-penetration firestop systems. 3M™ Fire Barrier Moldable Putty Pads MPP+ help to maintain a firestop penetration seal for up to 4 hours. 3M™ Fire Barrier Moldable Putty Pads MPP+ exhibit excellent adhesion to a full range of construction substrates and penetrants. The pads are easily molded by hand (no mixing required). In addition to its fire-resistant properties, the 1/16th in. (2.54mm) thick pads have airborne sound reduction characteristics which helps minimize sound transmission through assemblies requiring an STC rating.

Color: ■ Dark Red

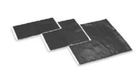

4 in. x 8 in. (101.6mm x 203.3mm), 7 in. x 7 in. (177.8mm x 177.8mm) and 9.5 in. x 9.5 in. (241.3mm x 241.3mm) pad sizes available.

Product Features

- Firestop tested up to 4 hours in accordance with ASTM E 814 (UL 1479) & CAN/ULC-S115
- Wall opening protective tested up to 2 hours in accordance with UL 263
- Provides draft and cold smoke seal
- Pliable and conformable — molds easily into required shape
- Helps reduce noise transfer*
- Excellent adhesion
- Re-enterable/repairable
- Halogen-free and solvent-free
- Excellent aging properties
- Low VOC
- Will not dry out or crumble
- Red color widely recognized as a fire protective product

Meets the intent of LEED® VOC regulations—helps reduce the quantity of indoor air contaminants that may be odorous, irritating and harmful to the comfort and well-being of the installers and occupants.
*Minimizes noise transfer – STC-Rating of 52 when tested in STC 53-rated wall assembly.

FIRE BARRIER: 4 HOURS Fire Protection
SMOKE SEAL: L Rating Ambient Temperature
WALL OPENING: 2 HOURS Fire Protection
SOUND BARRIER: STC 52 Sound Transmission Class
FM APPROVED — SUBJECT TO THE CONDITIONS OF APPROVAL, ALL 4 WALL & FLOOR PENETRATION FIRESTOP WHEN INSTALLED AS DESCRIBED IN THE CURRENT EDITION OF THE FMRC APPROVAL GUIDE
UL LISTED — FILL, VOID OR CAVITY MATERIALS 0X63
CLASSIFIED UL — WALL OPENING PROTECTIVE MATERIAL FIRE RESISTANCE CLASSIFICATION SEE U.L. FIRE RESISTANCE DIRECTORY 0X63
CLASSIFIED UL — FILL, VOID OR CAVITY FOR USE IN THROUGH-PENETRATION FIRESTOP SYSTEMS SEE U.L. FIRE RESISTANCE DIRECTORY 0X63

2. Applications

4 in. x 8 in. (101.6mm x 203mm) 3M™ Fire Barrier Moldable Putty Pads MPP+ are typically used as a wall opening protective to meet building requirements, for protection of membrane penetrations made by listed steel or non-metallic electrical boxes. It is also used to seal gaps between cables in multiple penetrations (including fiber optic inner duct) and to firestop cable bundles, insulated pipe, electrical conduit and metal pipe. Larger sized pads, 7 in. x 7 in. and 9.5 in x 9.5 in. (177.8mm x 177.8mm and 241.2mm x 241.2mm) are widely used to firestop metallic and non-metallic electrical outlet boxes up to 14 in. x 4.5 in. by 2-1/2 in. (355.6mm x 114.3mm x 63.5mm) deep. For larger applications, pads can be molded together by hand.

3. Specifications

3M™ Fire Barrier Moldable Putty Pads MPP+ shall be a one component, ready-to-use, intumescent elastomer capable of expanding a minimum of 3 times at 1000°F. The material shall be thixotropic and shall be applicable to overhead, vertical and horizontal firestops. Under normal conditions, 3M™ Fire Barrier Moldable Putty Pads MPP+ shall be noncorrosive to metal and compatible with synthetic cable jackets. The putty shall be listed by independent test agencies such as UL, Intertek or FM. 3M™ Fire Barrier Moldable Putty Pads MPP+ shall be tested to and pass the criteria of ASTM E 814 (UL 1479) Standard Test Method for Fire Tests of Penetration Firestop Systems and CAN/ULC S115 Standard Method of Fire Tests of Firestop Systems. 3M™ Fire Barrier Moldable Putty Pads MPP+ meets the requirements of the IBC, NFPA 5000, NEC (NFPA 70), NFPA 101 and NCB (Canada) Building Codes.

Typically Specified MasterFormat (2004)
Section 07 84 00 – Firestopping

Related Sections
Section 07 84 16 – Annular Space Protection
Section 07 86 00 – Smoke Seals
Section 07 87 00 – Smoke Containment Barriers
Section 07 27 00 – Thermal and Moisture Protection Firestopping
Section 21 00 00 – Fire Suppression
Section 26 00 00 – Electrical

For technical support relating to 3M™ Fire Protection Products and Systems, call: 1-800-328-1687
For more information on 3M™ Fire Protection Products, visit: www.3M.com/firestop

USE PUTTY AT ALL BOXES INSTALLED ON FIRE-RATED WALLS

4. Performance & Typical Physical Properties

Color:	Dark Red	**Dimensions:**	4 in. x 8 in. x 1/10 in. (101.6mm x 203.2mm x 2.5mm)
Nominal Density:	10–12 lbs./gal. (1.2–1.45kg/L)	**Unit Volume:**	2.52 in.^{3} (41.4cm^3)
Nominal Thickness:	1/10 in. (2.54mm)	**Unit Weight:**	2.7 oz (76g)
Surface Burning (ASTM E 84):	Flame Spread 0, Smoke Development 0		
Heat Expansion:	Begins at 350°F (177°C) Significant at 400°F (204°C) Free Expansion is Nominal 3 times	**Dimensions:**	7 in. x 7 in. x 1/10 in. (177.8mm x 177.8mm x 2.5mm)
		Unit Volume:	4.63 in.^{3} (76.0cm^3)
		Unit Weight:	4.1 oz (116g)
STC (ASTM E 90 and ASTM E 413):	52 when tested on back-to-back	**Dimensions:**	9.5 in. x 9.5 in. x 1/10 in. (241.3mm x 241.3mm x 2.5mm)
Tested in STC 53 rated wall assembly	electrical boxes	**Unit Volume:**	6.1 in.^{3} (139.8cm^3)
VOC Less H_2O and Exempt Solvents:	< 250g/L	**Unit Weight:**	7.6 oz (215g)

5. Packaging, Storage, Shelf Life

Packaging: Corrugated cardboard box with liner between individual pads.

Storage: 3M™ Fire Barrier Moldable Putty Pads MPP+ should be stored indoors in dry conditions.

Shelf Life: 3M™ Fire Barrier Moldable Putty Pads MPP+ shelf life is indefinite in original unopened containers. Product will not dry or crumble in opened containers. Normal stock and stock rotation practices are recommended.

6. Installation Techniques

Consult a 3M Authorized Fire Protection Products Distributor / Dealer or Sales Representative for Applicable UL, Intertek or other third-party drawings and system details.

Preparatory Work: The surface of the electrical box, or opening and any penetrating items should be cleaned (i.e. free of dust, grease, oil, loose materials, rust or other substances) to allow for the proper adhesion of the 3M™ Fire Barrier Moldable Putty+ Pad. Ensure that the surface of the substrates are not wet and are frost-free.

Installation Details: Electrical boxes must be firestopped under the following conditions: boxes larger than 16 sq. in. (103 sq. cm), if horizontal spacing between boxes is less than 24 in. (609.6mm), when multiple boxes are located in one stud cavity or if the aggregate of all boxes exceeds 100 sq. in. per 100 sq. ft. (645 sq. cm. per 9.29 sq. m) — refer to listed system details and applicable local building code requirements. For electrical box installations, a minimum of 1/10 in. (2.5mm) thick putty application is required. 3M™ Fire Barrier Moldable Putty Pads MPP+ are to be installed to completely cover the exterior of the outlet box (except for the side against the stud). To firestop penetrations, install the applicable depth of backing material (if required), remove the desired amount of putty from the pad, form (if necessary) and install as detailed within the listed system. Make sure that putty is in complete contact with the substrate and penetrating item(s).

Note: Partial pads can be pieced together and the seams between partial pads should overlap a minimum of 1/8 in. with the seams worked with the fingertips to create adhesion at the seam.

Limitations: Over application (i.e., using excessive amount of material) of product to vertical surfaces may cause sagging, follow system details. Product is not impaired by freezing but should be warmed to 32°F (0°C) before applying.

7. Maintenance

No maintenance is expected when installed in accordance with the applicable UL, Intertek, FM or other third-party listed system. Once installed, if any section of the 3M™ Fire Barrier Moldable Putty Pad MPP+ is damaged, the following procedure will apply: remove damaged putty, clean the affected area and install the proper thickness of putty, ensuring it bonds to the substrate and adjacent putty (product from damaged area can be reused if it is free from contaminants). Putty can be molded together at new/existing putty overlap.

8. Availability

3M™ Fire Barrier Moldable Putty Pads MPP+ are available from 3M Authorized Fire Protection Products Distributors and Dealers. 3M™ Fire Barrier Moldable Putty Pads MPP+ are available in the following sizes: (10 pads/pack, 10 packs/case) 4 in. x 8 in. x 1/10 in. (101.6mm x 203.2mm x 2.5mm), (20 pads/case) 7 in. x 7 in. (177.8mm x 177.8mm x 2.5mm), (20 pads/case) 9.5 in. x 9.5 in. 1/10 in. (241.3mm x 241.3mm x 2.5mm) rod-colored firestop material. For additional technical and purchasing information regarding this and other 3M Fire Protection Products, please call: 1-800-328-1687 or visit www.3M.com/firestop.

9. Safe Handling Information

Consult product's Material Safety Data Sheet (MSDS) from country-of-use prior to handling and disposal.

3M
Industrial Adhesives and Tapes Division
3M Center, Building 225-3S-06
St. Paul, MN 55144-1000
800-328-1687
877-369-2923 (Fax)
www.3M.com/firestop

Important Notice to User:
Technical Information: The technical information, recommendations and other statements contained in this document are based upon tests or experience that 3M believes are reliable, but the accuracy or completeness of such information is not guaranteed. **Product Use:** Many factors beyond 3M's control and uniquely within user's knowledge and control can affect the use and performance of a 3M product in a particular application. Given the variety of factors that can affect the use and performance of a 3M product, user is solely responsible for evaluating the 3M product and determining whether it is fit for a particular purpose and suitable for user's method of application. **Warranty and Limited Remedy:** If 3M warrants that each 3M Fire Protection Product will be free from defects in material and manufacture for 90 days from the date of purchase from 3M or its authorized distributor, 3M will replace any product that 3M finds defective or 3M will refund the purchase price of any product 3M finds defective. 3M MAKES NO OTHER WARRANTIES OR GUARANTEES, EXPRESS OR IMPLIED, INCLUDING, BUT NOT LIMITED TO, ANY IMPLIED WARRANTY OF MERCHANTABILITY OR FITNESS FOR A PARTICULAR PURPOSE. If a 3M product does not conform to this warranty, the sole and exclusive remedy is, at 3M's option, replacement of the 3M product or refund of the purchase price. **Limitation of Liability:** Except where prohibited by law, 3M will not be liable for any loss or damage arising from the 3M product, whether direct, indirect, special, incidental or consequential, regardless of the legal theory asserted.

3M is a trademark of 3M Company, used under license in Canada. LEED is a trademark of U.S. Green Building Council Non-Profit Corporation.
All other trademarks are the property of their respective owners.

Please Recycle. Printed in U.S.A. © 3M 2012. All rights reserved. Reference Number 98-0213-4620-4 Rev8

PROJECT SPECIFIC STATE AGENCY APPROVAL

IDENTIFICATION STAMP
DIV. OF THE STATE ARCHITECT
APP: 02-123433 INC:
REVIEWED FOR
SS ☑ FLS ☑ ACS ☑
DATE: 01/20/2026

R&S TAVARES ASSOCIATES
DESIGN • CONSULTING • PROJECT
11590 W. BERNARDO COURT, SUITE 100
SAN DIEGO, CA 92127
WWW.RSTAVARES.COM

PROFESSIONAL STAMP

REGISTERED PROFESSIONAL ENGINEER — MANNY D. FRANCISCO — No. 63380 — 03/31/24 — STRUCTURAL — STATE OF CALIFORNIA
RST#22088
02/16/24

THE PLANS, IDEAS & DESIGNS SHOWN ON THESE DRAWINGS ARE THE PROPERTY OF R&S TAVARES ASSOCIATES, INC. DEVISED SOLELY FOR THIS CONTRACT. THESE PLANS SHALL NOT BE USED, IN WHOLE OR IN PART, FOR ANY PURPOSE FOR WHICH THEY WERE NOT INTENDED WITHOUT THE EXPRESS WRITTEN CONSENT OF R&S TAVARES ASSOCIATES, INC. ©

CLIENT

Class Leasing
1651Juanita Street, San Jacinto, CA 92583
Voice (951) 943-1908 Fax (951)943-5768

ORIGINAL PC STATE AGENCY APPROVAL

APPROVED
DIV. OF THE STATE ARCHITECT
APP: 04-123059 PC
REVIEWED FOR
SS ☑ FLS ☑ ACS ☑ CG ☑
DATE: 02/20/2024

REVISIONS

#	Description	BY

PROJECT TITLE
PC 2022 CBC:24' x 40' EXPANDABLE TO 120' x 40'

EL DORADO 160# SNOW LOAD

SHEET TITLE
FIRE SEPARATION & PENETRATION DETAILS

PROJECT NUMBER
22073

DRAWN BY
rMc

CHECKED BY
RT/AR

DATE
06/07/2021

SHEET NO.
A3.0.1

SHEET OF SHEETS

\\192.168.10.2\Clients\2022\22073 - Class Leasing, El Dorado Cty OE - S Lake Tahoe MS 160lb Snow load\#Main Files\REVITRST#22073 - Class Leasing, PC 24x40 to 120x40 HS_Eldorado Cty OE - 160# Snow Load_MainFile_detached.rvt
5/31/2022 7:23:55 AM

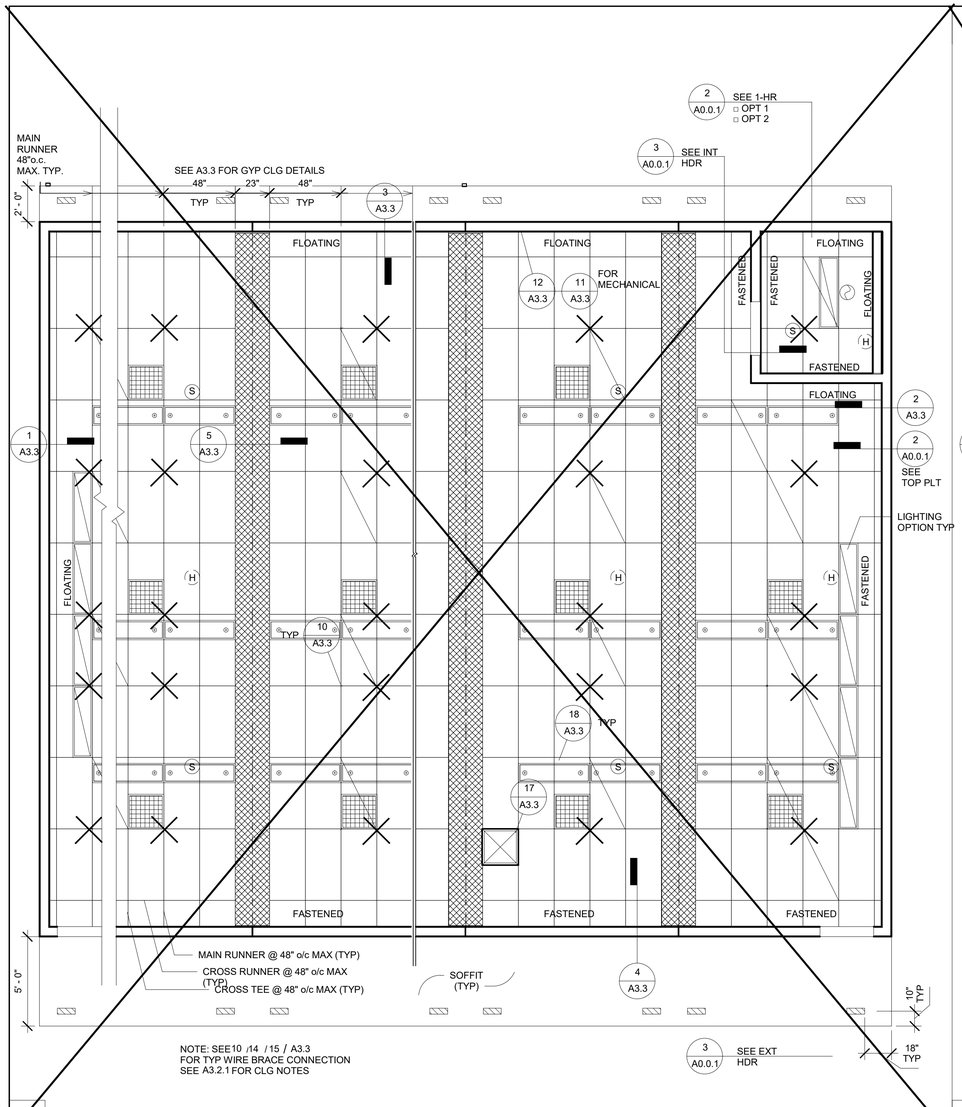

3 *1/4" = 1'-0"*
48x40 thru 120x40 RCP(A)

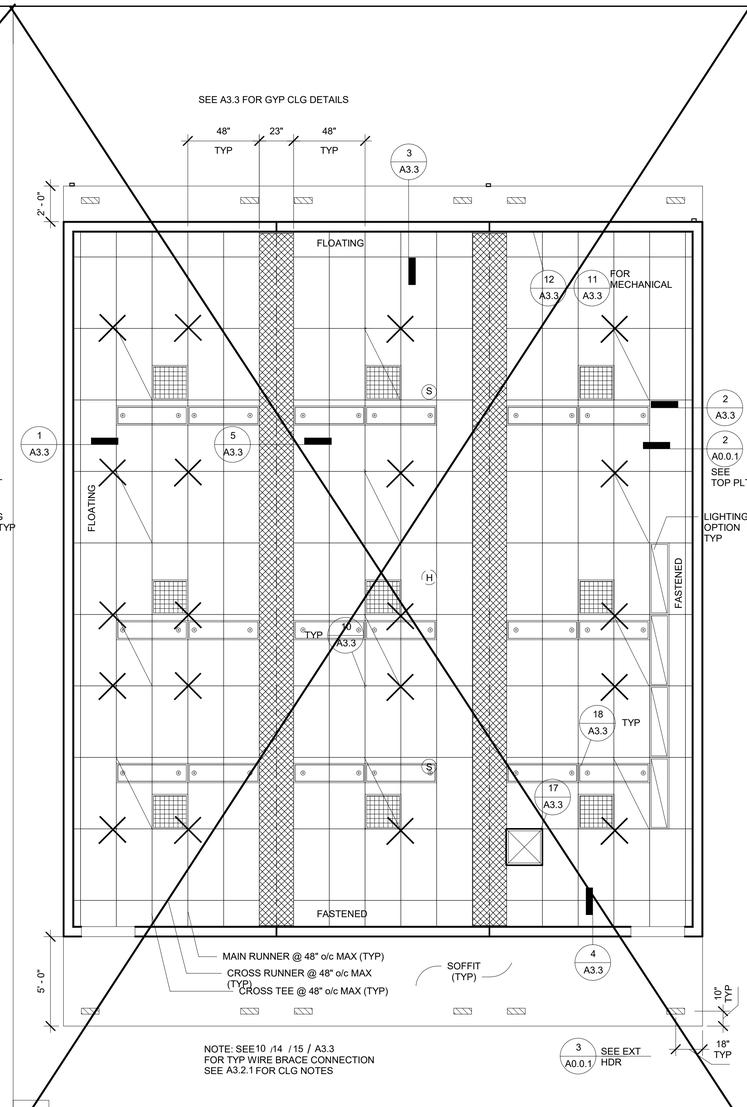

2 *1/4" = 1'-0"*
36x40 RCP(A)

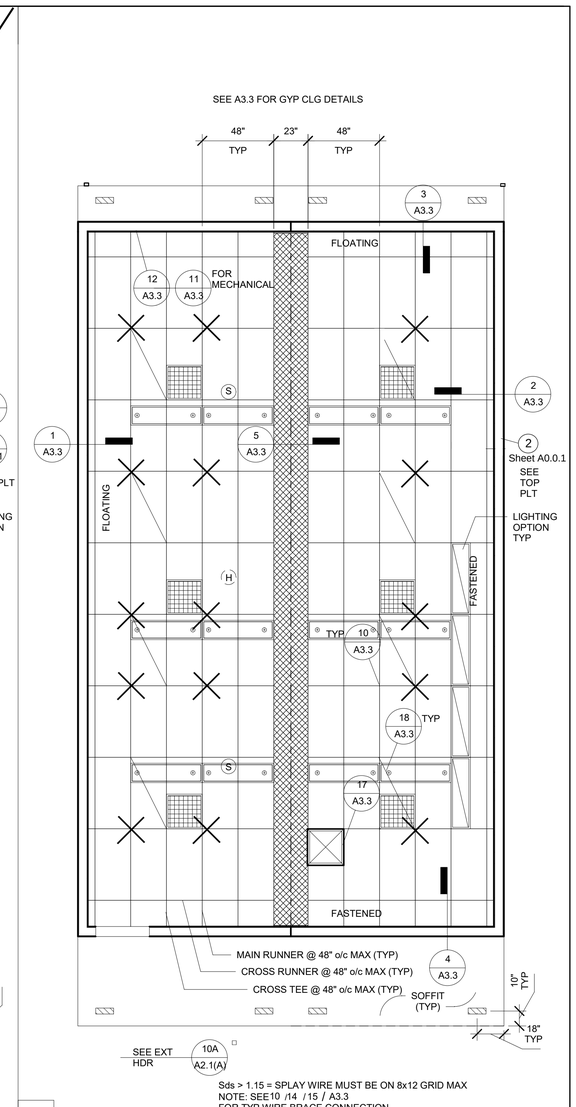

1 *1/4" = 1'-0"*
24x40 RCP(A)

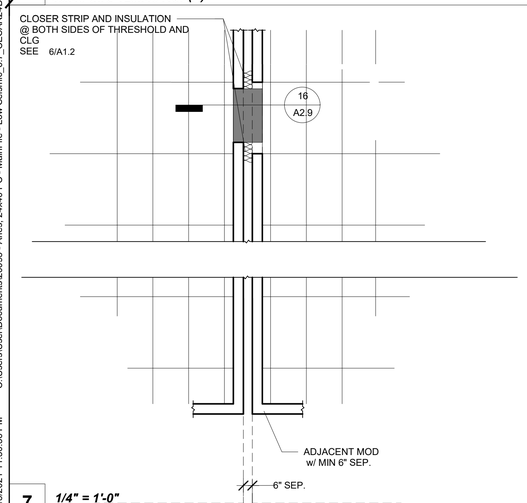

7 *1/4" = 1'-0"*
RCP - Optional Opening

5 *1/4" = 1'-0"*
T-Bar Sched

MAIN RUNNER 7301
4' CROSS T #: XL7341
2' CROSS T #: XL7328

STANDARD 7/8" WALL ANGLE CLIP w/ BERC-2 CLIP (ICC #ESR-1308)
2" WALL ANGLE: 7810 (OPTIONAL)

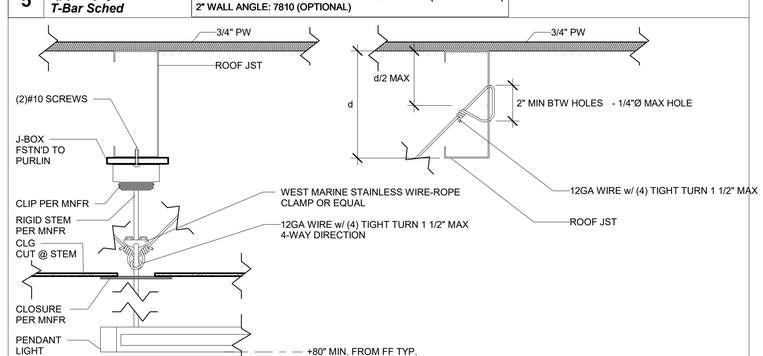

6 *3" = 1'-0"*
Section - Pendant Mounting Detail

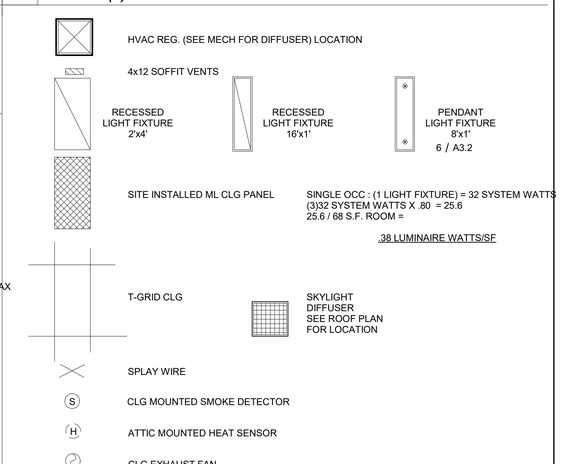

4 *1/4" = 1'-0"*
RCP Legend

PROJECT SPECIFIC STATE AGENCY APPROVAL

IDENTIFICATION STAMP
DIV. OF THE STATE ARCHITECT
APP: 02-123433 INC:
REVIEWED FOR
SS ☑ FLS ☑ ACS ☑
DATE: 01/20/2026

R&S TAVARES ASSOCIATES
DESIGN ◆ CONSULTING ◆ PROJECT MGT
11590 W Bernardo Court, Suite 100
San Diego, CA 92127
www.rstavares.com

PROFESSIONAL STAMP

REGISTERED PROFESSIONAL ENGINEER
MANNY D. FRANCISCO
No. 93380
Exp. 03/31/24
STRUCTURAL
STATE OF CALIFORNIA
RST#22088
02/16/24

THE PLANS, IDEAS & DESIGNS SHOWN ON THESE DRAWINGS ARE THE PROPERTY OF R&S TAVARES ASSOCIATES, INC. DEVISED SOLELY FOR THIS CONTRACT. THESE PLANS SHALL NOT BE USED, IN WHOLE OR IN PART, FOR ANY PURPOSE FOR WHICH THEY WERE NOT INTENDED WITHOUT THE EXPRESS WRITTEN CONSENT OF R&S TAVARES ASSOCIATES, INC. ©

CLIENT

Class Leasing
1651Juanita Street, San Jacinto, CA 92583
Voice (951) 943-1908 Fax (951)943-5768

ORIGINAL PC STATE AGENCY APPROVAL

APPROVED
DIV. OF THE STATE ARCHITECT
APP: 04-123059 PC
REVIEWED FOR
SS ☑ FLS ☑ ACS ☑ CG ☑
DATE: 02/20/2024

Revision Schedule

#	Description	Date

PRE-CHECK (PC) DOCUMENT

Code: 2022 CBC

A separate project application for construction is required

PROJECT TITLE

PC 2022 CBC: 24' x 40' EXPANDABLE TO 120' x 40'

SHEET TITLE

RCP

PROJECT NUMBER

22088

DRAWN BY

rMc/SC

CHECKED BY

RH/RT

DATE

SHEET NO.

A3.2

SHEET OF

C:\Users\User\Documents\20093 - Aries, 24x40 PC - MainFile - Low Seismic_6.7_CES/AR24D83.rvt

6/15/2021 11:50:56 PM

1. CEILING SYSTEM GENERAL NOTES

1.01 Ceiling system components shall comply with ASTM C635 and Section 5.1 of ASTM E580.

1.02 The ceiling grid system must be rated heavy duty as defined by ASTM C635.

1.03 Ceiling systems. The following ceiling system(s) is/are part of the scope of this project:
Manufacturer: ARMSTONG (OR EQUAL)
Product Name: PRELUDE XL AND PRELUDE XL HIGH RECYLED CONTENT(HRC)
Evaluation Report Type and Number: ICC ESR#1308
Main Runner Part, Model, or Catalog Number: 7301
Cross Runner Part, Model, Catalog Number: 4" CROSS T # XL7341 / 2" CROSS T # XL7328

1.04 Seismic Wall Clip: STANDARD 7/8" WALL ANGLE CLIP w/ BERC2 CLIP
Manufacturer's Model: 7810

1.05 Ceiling panels shall not support any luminaires, air terminals or devices.

1.06 For ceiling installations utilizing acoustical tile panels of mineral or glass fiber, it is not mandatory to provide ¾" clearance between the acoustical tile panels and the wall on the sides of the ceiling which are free to slip. For all other ceiling panel types, provide ¾" clearance between the ceiling panel and the wall on the sides of the ceiling free to slip. Clearance between ceiling grid runners/members and walls shall comply with the details on these drawings regardless of ceiling tile material.

2. MATERIALS

2.01 Ceiling wire shall be Class 1 zinc coated (galvanized) carbon steel conforming to ASTM A641. Wire shall be #12 gauge (0.106" diameter) with soft temper and minimum ultimate tensile strength = 70 ksi.

2.02 Galvanized sheet steel (including that used for metal stud and track compression struts/post) shall conform to ASTM A653, or other equivalent sheet steel listed in Section A3.1 of the North American Specification for the Design of Cold-Formed Steel Structural Members, (AISI S100). Material 43 mil (18 gauge) and lighter shall have minimum yield strength of 33 ksi. Material 54 mil (16 gauge) and heavier shall have a minimum yield strength of 50 ksi.

2.03 Electrical metallic tube (EMT) shall be ANSI C80.3/UL 797 carbon steel with G90 galvanizing. EMT shall have minimum yield strength (F_Y) of 30 ksi and minimum ultimate strength (F_U) of 48 ksi.

3. ATTACHMENT OF HANGER AND BRACING WIRES

3.01 Separate all ceiling hanger and bracing wires at least 6 inches from all unbraced ducts, pipes, conduit, etc.

3.02 Hanger and bracing wires shall not attach to or bend around obstructions including but not limited to piping, ductwork, conduit and equipment.

Detail Title:	REV: 09/21/2015	Detail No.
CEILING NOTES	REV: 03/2022	1.00

NOTE:
BERG2 2" BEAM-END RETAINING CLIP -Allows you to create a code-compliant Seismic D, E, F ceiling installation while eliminating the need to use 2" wall molding or spreader bars.

TABLE 1: LATERAL FORCE BRACE ASSEMBLY SPACING		
Design Spectral Acceleration Parameter, (S_{DS})	Brace Assembly Spacing	
	z/h ≤ 0.5[a]	z/h > 0.5[a,b]
S_{DS} ≤ 1.15	12'-0" x 12'-0"	12'-0" x 12'-0"
1.15 < S_{DS} ≤ 1.73	12'-0" x 12'-0"	8'-0" x 12'-0"
S_{DS} > 1.73	8'-0" x 12'-0"	8'-0" x 8'-0"

Footnotes:
a. Where, as defined in ASCE 7 Section 13.3.1:
z = height in structure of point of attachment of ceiling with respect to the base.
h = average roof height of the structure with respect to the base.
b. It shall be permitted to use the brace assembly spacing for "z/h > 0.5" for the full building height.

SEE ALT SHEET FOR FINAL CONFIGURATION OF CEILING AND S_{DS} VALUE SITE SPECIFIC

3.03 Hanger wires that are more than one (horizontal) in six (vertical) out of plumb shall have counter-sloping wires.

3.04 Slack safety wires shall be considered hanger wires for installation and testing requirements.

3.05 Hanger and bracing wire anchorage to the structure shall be installed in such a manner that the direction of the anchorage aligns closely with the direction of the wire (e.g., bracing wire ceiling clips must be bent as shown in the details and rotated as required to align closely with the direction of the wire, screw eyes in wood must be installed so they align closely with the direction of the wire, etc.).

4. FASTENERS AND WELDING

4.01 Sheet metal screws shall comply with ASTM C1513 and ASME B18.6.3. Penetration of screws through joined material shall not be less than three exposed threads.

4.02 Expansion anchors shall be: NA

4.03 Power-Actuated Fasteners shall be: NA

4.04 If not otherwise specified in the evaluation report, power-actuated fasteners installed in steel shall be installed so the entire pointed end of the fastener is driven through the steel member

4.05 Power-actuated fasteners in concrete or masonry are not permitted for bracing wires.

4.06 Concrete reinforcement and prestressing tendons shall be located by non-destructive means prior to installing post-installed anchors.

4.07 Welding shall be in accordance with AWS D1.3 using E60XX series electrodes.

5. TESTING

5.01 All field testing must be performed in the presence of the project inspector.

5.02 Post-installed anchors in concrete used to support hanger wires shall be tested at a frequency of 10 percent. Power-actuated fasteners in concrete shall be field tested for 200 pounds in tension. All other post-installed anchors in concrete shall be tested in accordance with CBC Section 1910A.5.

5.03 Post-installed anchors in concrete used to attach bracing wires shall be tested at a frequency of 50 percent in accordance with CBC Section 1910A5.

6. LUMINAIRES

6.01 All luminaires shall be positively attached to the ceiling suspension systems by mechanical means to resist a horizontal force equal to the weight of the luminaire. A minimum of two screws or approved fasteners are required at each luminaire, per ASTM E580 Section 5.3.1.

6.02 Surface-mounted luminaires shall be attached to the main runner with at least two positive clamping devices. The clamping device shall completely surround the supporting

Detail Title:	REV: 09/21/2015	Detail No.
CEILING NOTES	REV: 03/2022	1.00

ceiling runner and be made of steel with a minimum thickness of #14 gauge. Rotational spring catches do not comply. A #12 gauge slack safety wire shall be connected from each clamping device to the structure above. Provide additional supports when a luminaire is 8 feet or longer or exceeds 56 pounds. Maximum spacing between supports shall not exceed 8 feet.

6.03 Luminaires weighing less than or equal to 10 pounds may be supported directly on the ceiling runners, shall have a minimum of one #12 gauge slack safety wire connected from the fixture housing to the structure above.

6.04 Luminaires weighing greater than 10 pounds but less than or equal to 56 pounds may be supported directly on the ceiling runners, but they shall have a minimum of two #12 gauge slack safety wires connected from the fixture housing at diagonal corners to the structure above.

Exception: All luminaires greater than two by four feet weighing less than 56 pounds shall have a #12 gauge slack safety wire at each corner.

6.05 All luminaires weighing greater than 56 pounds shall be independently supported by not less than four taut #12 gauge hanger wires (one at each corner) attached from the fixture housing to the structure above or other approved hangers. The four taut #12 gauge wires or other approved hangers, including their attachment to the structure above, shall be capable of supporting four times the weight of the fixture.

7. SERVICES WITHIN THE CEILING

7.01 All flexible sprinkler hose fitting mounting brackets, ceiling-mounted air terminals or other services shall be positively attached to the ceiling suspension systems by mechanical means. Screws or approved fasteners are required. A minimum of two attachments are required at each component.

7.02 Ceiling-mounted air terminals or other services weighing less than or equal to 20 pounds shall have one #12 gauge slack safety wire attached from the terminal or service to the structure above.

7.03 Flexible sprinkler hose fittings, ceiling-mounted air terminals or other services weighing more than 20 pounds but less than or equal to 56 pounds shall have two #12 gauge slack safety wires (at diagonal corners) connected from the terminal or service to the structure above.

7.04 Flexible sprinkler hose fittings, ceiling-mounted air terminals or other services weighing more than 56 pounds shall be supported directly from the structure above by not less than four taut #12 gauge hanger wires attached from the terminal or service to the structure above or other approved hangers.

8. OTHER DEVICES WITHIN THE CEILING

8.01 All lightweight miscellaneous devices, such as strobe lights, occupancy sensors, speakers, exit signs, etc., shall be attached to the ceiling grid. In addition, devices weighing more than 10 pounds shall have a #12 gauge slack safety wire anchored to the structure above. Devices weighing more than 20 pounds shall be supported independently from the structure above.

Detail Title:	REV: 09/21/2015	Detail No.
CEILING NOTES	REV: 03/2022	1.00

NOTE:
1.ITEMS SHOWN WITH A MFR CALLOUT MAY BE SUBSTITUTED WITH AN OR EQUAL OR GREATER PRODUCT WITH DSA APPROVAL

PROJECT SPECIFIC STATE AGENCY APPROVAL

IDENTIFICATION STAMP
DIV. OF THE STATE ARCHITECT
APP: 02-123433 INC:
REVIEWED FOR
SS ☑ FLS ☑ ACS ☑
DATE: 01/20/2026

R&S TAVARES ASSOCIATES
DESIGN ★ CONSULTING ★ PROJECT MGT
11590 W Bernardo Court, Suite 100
San Diego, CA 92127
www.rstavares.com

PROFESSIONAL STAMP

REGISTERED PROFESSIONAL ENGINEER
MANNY D. FRANCISCO-TAVARES
No. 63380
Exp. 03/31/24
STRUCTURAL
STATE OF CALIFORNIA
RST#22088
02/16/24

THE PLANS, IDEAS & DESIGNS SHOWN ON THESE DRAWINGS ARE THE PROPERTY OF R&S TAVARES ASSOCIATES, INC. DEVISED SOLELY FOR THIS CONTRACT. THESE PLANS SHALL NOT BE USED, IN WHOLE OR IN PART, FOR ANY PURPOSE FOR WHICH THEY WERE NOT INTENDED WITHOUT THE EXPRESS WRITTEN CONSENT OF R&S TAVARES ASSOCIATES, INC. ©

CLIENT

Class Leasing
1651 Juanita Street, San Jacinto, CA 92583
Voice (951) 943-1908 Fax (951)943-5768

ORIGINAL PC STATE AGENCY APPROVAL

APPROVED
DIV. OF THE STATE ARCHITECT
APP: 04-123059 PC
REVIEWED FOR
SS ☑ FLS ☑ ACS ☑ CG ☑
DATE: 02/20/2024

Revision Schedule

#	Description	Date

PRE-CHECK (PC) DOCUMENT

Code: 2022 CBC

A separate project application for construction is required

PROJECT TITLE
PC 2022 CBC: 24' x 40' EXPANDABLE TO 120' x 40'

SHEET TITLE
CEILING NOTES

PROJECT NUMBER
22088

DRAWN BY
rMc/SC

CHECKED BY
RH/RT

DATE

SHEET NO.
A3.2.1

SHEET OF

6/15/2021 11:50:57 PM C:\Users\User\Documents\20093 - Aries. 24x40 PC - MainFile - Low Seismic_6.7_CESAR24D63.rvt

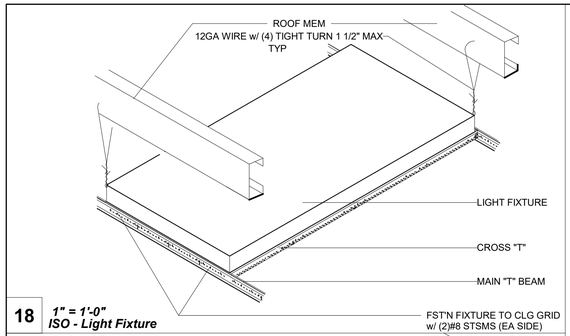

18 *1" = 1'-0"*
ISO - Light Fixture

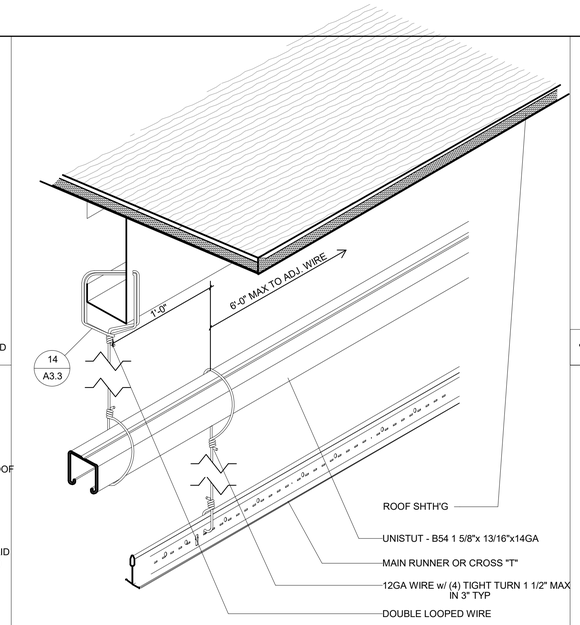

12 *3" = 1'-0"*
ISO - Trapeze Condition

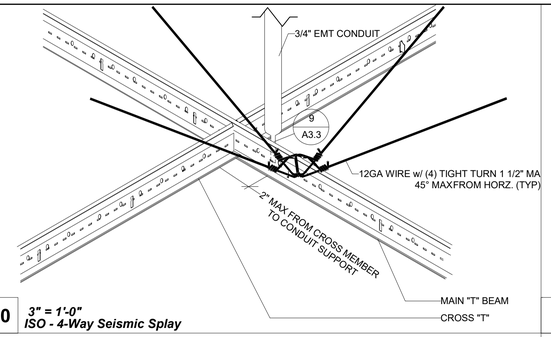

10 *3" = 1'-0"*
ISO - 4-Way Seismic Splay

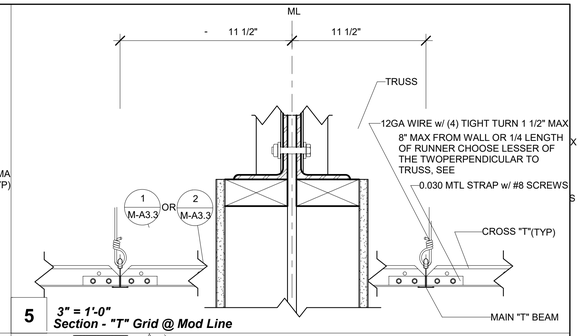

5 *3" = 1'-0"*
Section - "T" Grid @ Mod Line

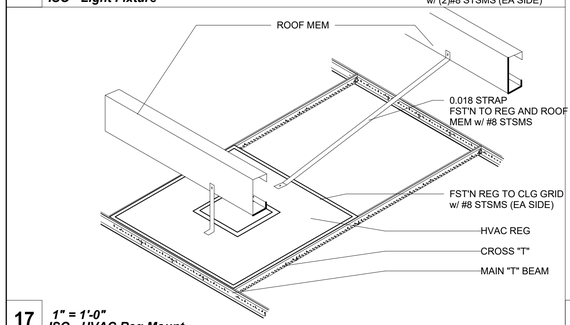

17 *1" = 1'-0"*
ISO - HVAC Reg Mount

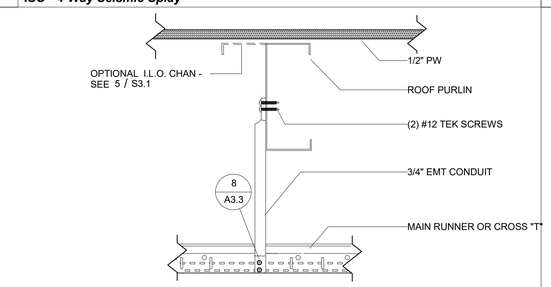

9 *3" = 1'-0"*
Elevation - Compression Strut

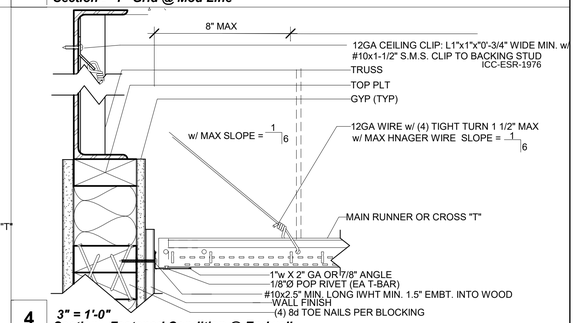

4 *3" = 1'-0"*
Section - Fastened Condition @ Endwall

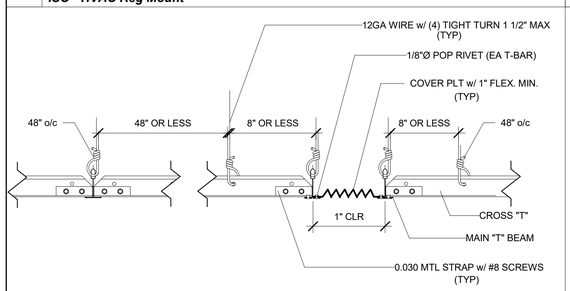

16 *3" = 1'-0"*
Section - "T" Grid @ Mod Line

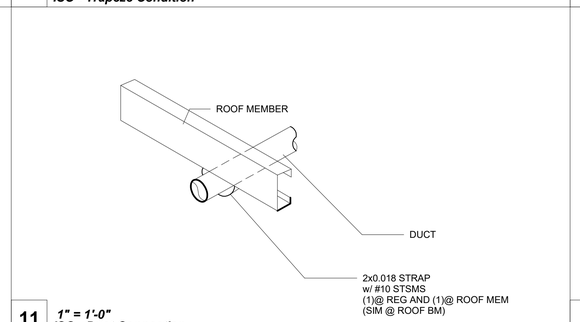

11 *1" = 1'-0"*
ISO - Duct Connection

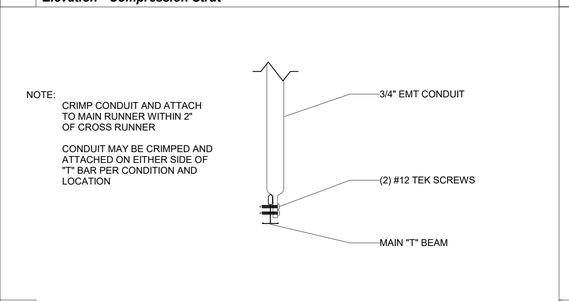

8 *3" = 1'-0"*
Section - Compression Strut

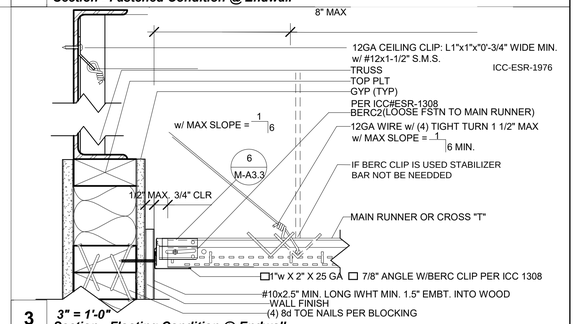

3 *3" = 1'-0"*
Section - Floating Condition @ Endwall

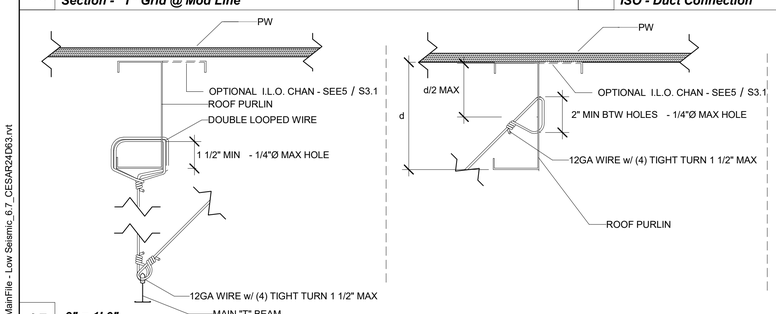

15 *3" = 1'-0"*
Section - Brace Wire Detail

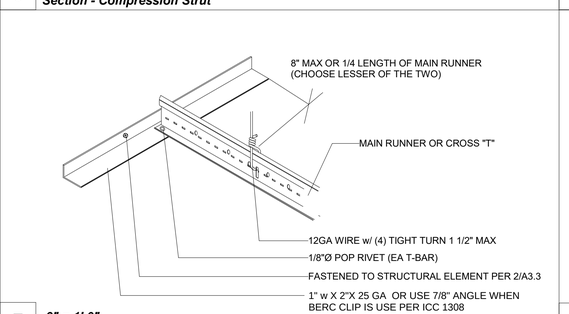

7 *3" = 1'-0"*
Fixed Condition w/ 7/8" Angle

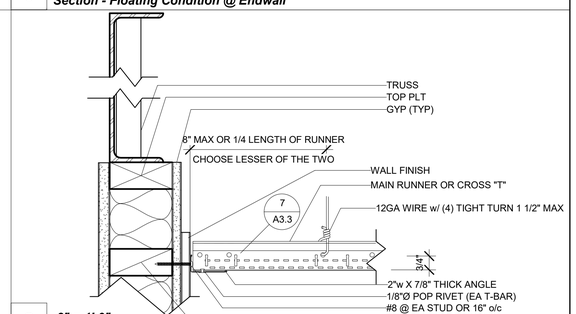

2 *3" = 1'-0"*
Section - Fastened Condition @ Sidewall

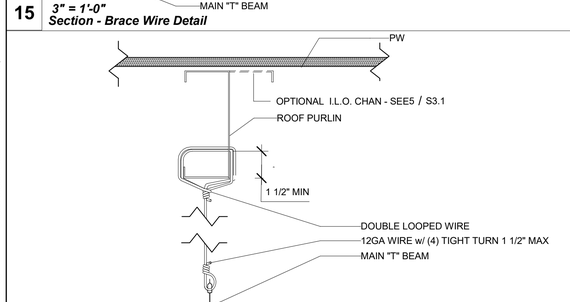

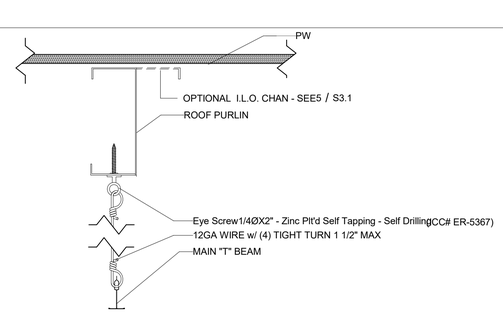

14 *3" = 1'-0"*
Section - Hanger Wire Detail

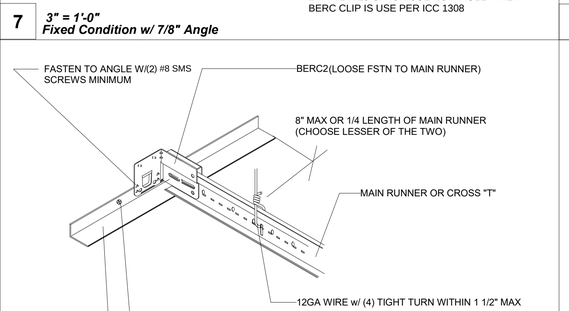

6 *3" = 1'-0"*
Floating Condition w/ 7/8" Angle

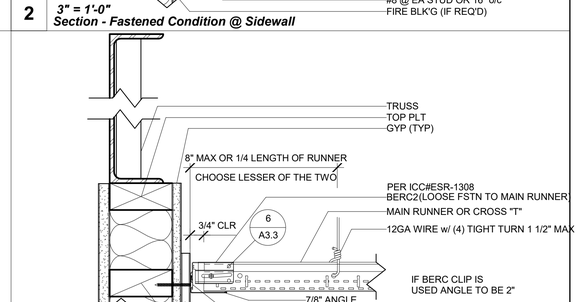

1 *3" = 1'-0"*
Section - Floating Condition @ Sidewall

PROJECT SPECIFIC STATE AGENCY APPROVAL

IDENTIFICATION STAMP
DIV. OF THE STATE ARCHITECT
APP: 02-123433 INC:
REVIEWED FOR
SS ☑ FLS ☑ ACS ☑
DATE: 01/20/2026

R&S TAVARES ASSOCIATES
DESIGN ♦ CONSULTING ♦ PROJECT MGT
11590 W BERNARDO COURT, SUITE 100
SAN DIEGO, CA 92127
WWW.RSTAVARES.COM

PROFESSIONAL STAMP

REGISTERED PROFESSIONAL ENGINEER
MANNY D. FRANCISCO-TAVARES
No. 13380
EXP. 03/31/24
STRUCTURAL
STATE OF CALIFORNIA
RST#22088
02/16/24

THE PLANS, IDEAS & DESIGNS SHOWN ON THESE DRAWINGS ARE THE PROPERTY OF R&S TAVARES ASSOCIATES, INC. DEVISED SOLELY FOR THIS CONTRACT. THESE PLANS SHALL NOT BE USED, IN WHOLE OR IN PART, FOR ANY PURPOSE FOR WHICH THEY WERE NOT INTENDED WITHOUT THE EXPRESS WRITTEN CONSENT OF R&S TAVARES ASSOCIATES, INC. ©

CLIENT

Class Leasing
1651Juanita Street, San Jacinto, CA 92583
Voice (951) 943-1908 Fax (951)943-5768

ORIGINAL PC STATE AGENCY APPROVAL

APPROVED
DIV. OF THE STATE ARCHITECT
APP: 04-123059 PC
REVIEWED FOR
SS ☑ FLS ☑ ACS ☑ CG ☑
DATE: 02/20/2024

Revision Schedule

#	Description	Date

PRE-CHECK (PC) DOCUMENT

Code: 2022 CBC

A separate project application for construction is required

PROJECT TITLE

PC 2022 CBC: 24' x 40' EXPANDABLE TO 120' x 40'

SHEET TITLE

CEILING DETAILS (T-GRID)

PROJECT NUMBER: 22088

DRAWN BY: rMc/SC

CHECKED BY: RH/RT

DATE:

SHEET NO.

A3.3

SHEET OF

6/15/2021 11:51:03 PM C:\Users\User\Documents\20093 - Aries, 24x40 PC - MainFile - Low Seismic_6.7_CESAR24D63.rvt

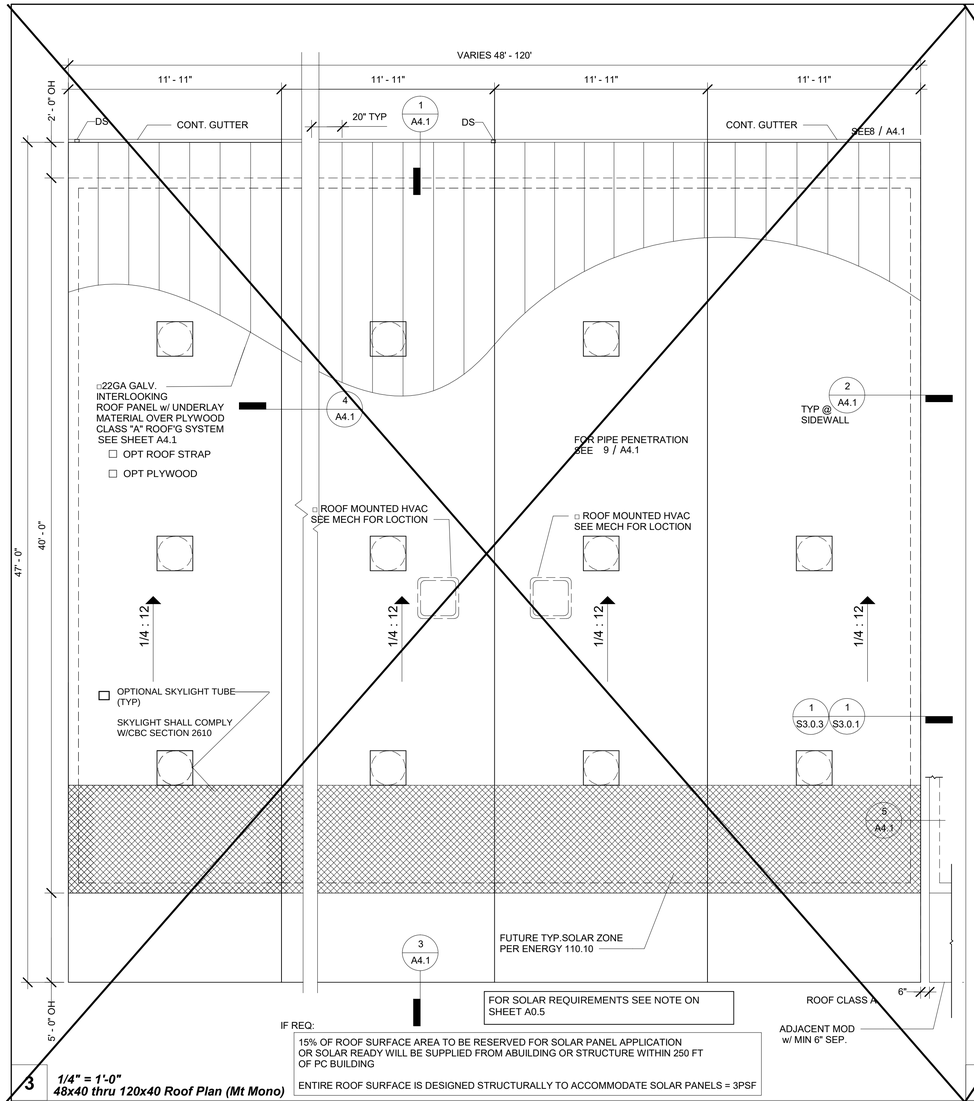

3 *1/4" = 1'-0"*
48x40 thru 120x40 Roof Plan (Mt Mono)

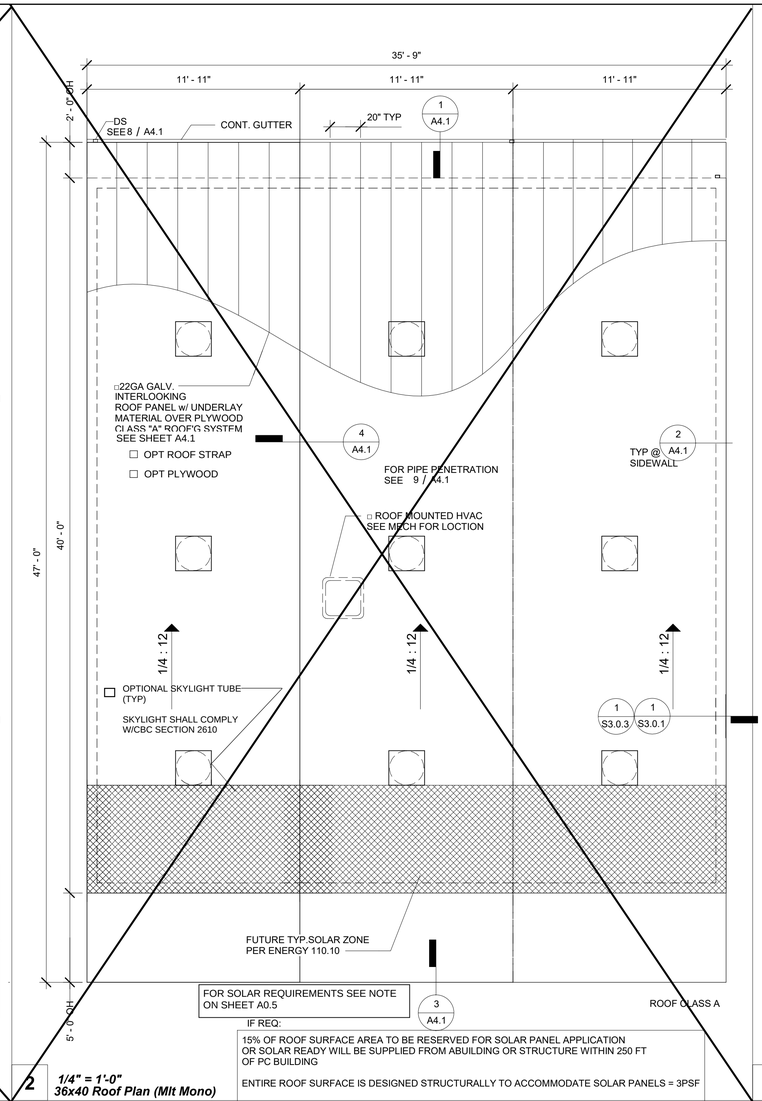

2 *1/4" = 1'-0"*
36x40 Roof Plan (Mlt Mono)

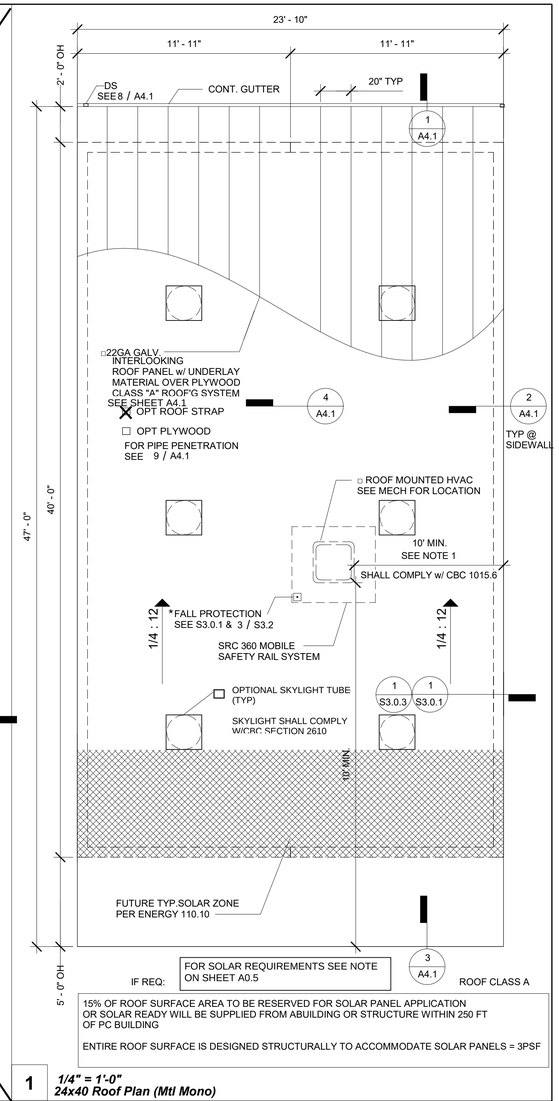

1 *1/4" = 1'-0"*
24x40 Roof Plan (Mtl Mono)

Note: For conditioned structures, roofing must be installed IAW 2019 CBC SECTION 1202.3

1202.3 Unvented Attic and Unvented Enclosed Rafter Assemblies

Unvented attics and unvented enclosed roof framing assemblies created by ceilings applied directly to the underside of the roof framing members/rafters and the structural roof sheathing at the top of the roof framing members shall be permitted where all of the following conditions are met:

1. The unvented attic space is completely within the building thermal envelope.
2. No interior Class I vapor retarders are installed on the ceiling side (attic floor) of the unvented attic assembly or on the ceiling side of the unvented enclosed roof framing assembly.
3. Where wood shingles or shakes are used, not less than a 1/4-inch (6.4 mm) vented airspace separates the shingles or shakes and the roofing underlayment above the structural sheathing.
4. In Climate Zones 14 and 16, any air-impermeable insulation shall be a Class II vapor retarder or shall have a Class II vapor retarder coating or covering in direct contact with the underside of the insulation.

   See the California Energy Code, Figure 100.1-A — California Climate Zones.

   4.1. **[HCD 1 & HCD 2]** In Climate Zones 14 and 16, a Class I or Class II vapor retarder shall be installed on the indirectly conditioned space side of all insulation in an unvented attic with air-permeable insulation, for condensation control.

5. Insulation shall be located in accordance with the following:

   5.1. Item 5.1.1, 5.1.2, 5.1.3 or 5.1.4 shall be met, depending on the air permeability of the insulation directly under the structural roof sheathing. No insulation shall be required when roof tiles, wood shingles or wood shakes, or any other roofing system using battens and no continuous underlayment is installed. A continuous underlayment shall be considered to exist if sheathing, roofing paper or any continuous layer having a perm rate of no more than one perm under the dry cup method is present.

   5.1.1. Where only air-impermeable insulation is provided, it shall be applied in direct contact with the underside of the structural roof sheathing.

   5.1.2. Where air-permeable insulation is provided inside the building thermal envelope, it shall be installed in accordance with

   Item 5.1.1. In addition to the air-permeable insulation installed directly below the structural sheathing, rigid board or sheet insulation shall be installed directly above the structural roof sheathing in accordance with the R-values in Table 1202.3 for condensation control.

   5.1.3. Where both air-impermeable and air-permeable insulation are provided, the air-impermeable insulation shall be applied in direct contact with the underside of the structural roof sheathing and shall be in accordance with the R-values in Table 1202.3 for condensation control. The air-permeable insulation shall be installed directly under the air-impermeable insulation.

   5.1.4. Alternatively, sufficient rigid board or sheet insulation shall be installed directly above the structural roof sheathing to maintain the monthly average temperature of the underside of the structural roof sheathing above 45°F (7°C). For calculation purposes, an interior air temperature of 68°F (20°C) is assumed and the exterior air temperature is assumed to be the monthly average outside air temperature of the three coldest months.

   5.2. Where preformed insulation board is used as the air-impermeable insulation layer, it shall be sealed at the perimeter of each individual sheet interior surface to form a continuous layer.

Exceptions:

1. Section 1202.3 does not apply to special use structures or enclosures such as swimming pool enclosures, data processing centers, hospitals or art galleries.
2. Section 1202.3 does not apply to enclosures in Climate Zones 14 and 16 that are humidified beyond 35 percent during the three coldest months.

TABLE 1202.3
INSULATION FOR CONDENSATION CONTROL

CLIMATE ZONE	MINIMUM R-VALUE OF AIR-IMPERMEABLE INSULATION[a]
2B and 3B tile roof only	0 (none required)
1, 2A, 2B, 3A, 3B, 3C	R-5
4C	R-10
4A, 4B	R-15
5	R-20
6	R-25
7	R-30
8	R-35

a. Contributes to, but does not supersede, thermal resistance requirements for attic and roof assemblies in the *California Energy Code*.

NOTE: PER CBC 1015.6, - EXCEPTION, GUARDRAILS ARE NOT REQUIRED WHERE PERMANENT FALL RESTRAINT ANCHORAGE DEVICES ARE AFFIXED & SHALL BE PLACED NOT MORE THAN 10FT FROM THE ROOF EDGE.

ROOFS SHALL COMPLY WITH THE REQUIREMENTS OF CHAPTER 7A AND CHAPTER 15. ROOFS SHALL HAVE A ROOFING ASSEMBLY INSTALLED IN ACCORDANCE WITH ITS LISTING AND THE MANUFACTURER'S INSTALLATION INSTRUCTIONS.

* IF ROOF MOUNTED UNIT IS APPLIED

PV AREA FOR FIRE ACCESS REQ'T (PER IR 16-8)

3.2.1 General Requirements: A PV System shall be typically considered equipment. There is typically not an occupancy group classification, building area limitation, or type of construction assignment to a PV system.
a) PV equipment supported by non-combustible framing installed in locations dedicated for building frontage used for area increases per California Building Code (CBC), Chapter 5, Section 506, shall be limited in size and may be allowed on a case by case basis. Maximum area that may be allowed for such systems shall not exceed 1/3 of the horizontal projected area of each frontage.
b) Open sided PV systems and framing that are non-combustible and without use underneath may be considered equipment and may be placed next to DSA IR 16-8 Solar Photovoltaic and Thermal
(updated 01-25-17) Systems Review and Approval Requirements Page 11 of 19 property lines. Signs may be required on or near the system prohibiting any use or storage underneath the equipment.
c) Combustible PV systems and framing and those with use underneath such as for assembly or parking, may need to comply with 2022 CBC, Table 602. These structures may include those that do and that do not have a roof underneath the PV system.
d) PV systems (both the frame and the array) shall not be placed in fire department access roads. (Per Title 24 CCR, Division 1, Chapter 1, Section 3.05 and 2022 CFC Chapter 5, Section 503.)
e) Access to a public way or safe dispersal area shall not be obstructed by the system or system framing. (CBC 1027.6 and 442.3)
f) PV systems that cover a lunch area or similar (occupant load less than 50), that are not used for assembly purposes shall be considered equipment. Playgrounds would also fall into this category regardless of total occupant load.
g) Any PV system that is installed above an assembly use (i.e. Group A-3 or A-5 occupancy classification) shall be considered an open sided building structure and all or portions of CBC provisions apply on a case by case basis. Such areas might include an outdoor amphitheater, bleacher or grandstand seating with concentrated occupant loads and heavy use.
h) Fire Department concern for the installation of roof mounted PV systems will be addressed by DSA review to the State Fire Marshal Solar Photovoltaic Installation Guideline available at:
http://osfm.fire.ca.gov/pdf/reports/solarphotovoltaicguideline.pdf
i) When a PV system, without riser framework, is installed directly on a rated roof assembly with a required classification greater than "Class C" found in CBC, Chapter 15, and f

PROJECT SPECIFIC STATE AGENCY APPROVAL

IDENTIFICATION STAMP
DIV. OF THE STATE ARCHITECT
APP: 02-123433 INC:
REVIEWED FOR
SS ☑ FLS ☑ ACS ☑
DATE: 01/20/2026

R&S TAVARES ASSOCIATES
DESIGN ♦ CONSULTING ♦ PROJECT MGT
11590 W Bernardo Court, Suite 100
San Diego, CA 92127
www.rstavares.com

PROFESSIONAL STAMP

REGISTERED PROFESSIONAL ENGINEER
MANNY D. FRANCISCO
No. 63380
Exp. 03/31/24
STRUCTURAL
STATE OF CALIFORNIA
RST#22088
02/16/24

THE PLANS, IDEAS & DESIGNS SHOWN ON THESE DRAWINGS ARE THE PROPERTY OF R&S TAVARES ASSOCIATES, INC. DEVISED SOLELY FOR THIS CONTRACT. THESE PLANS SHALL NOT BE USED, IN WHOLE OR IN PART, FOR ANY PURPOSE FOR WHICH THEY WERE NOT INTENDED WITHOUT THE EXPRESS WRITTEN CONSENT OF R&S TAVARES ASSOCIATES, INC. ©

CLIENT

Class Leasing
1651Juanita Street, San Jacinto, CA 92583
Voice (951) 943-1908 Fax (951)943-5768

ORIGINAL PC STATE AGENCY APPROVAL

APPROVED
DIV. OF THE STATE ARCHITECT
APP: 04-123059 PC
REVIEWED FOR
SS ☑ FLS ☑ ACS ☑ CG ☑
DATE: 02/20/2024

Revision Schedule

#	Description	Date

PRE-CHECK (PC) DOCUMENT

Code: 2022 CBC

A separate project application for construction is required

PROJECT TITLE

PC 2022 CBC: 24' x 40' EXPANDABLE TO 120' x 40'

SHEET TITLE

ROOF PLAN MONO SLOPE (STANDING SEAM)

PROJECT NUMBER

22088

DRAWN BY

rMc/SC

CHECKED BY

RH/RT

DATE

SHEET NO.

A4.0.1

SHEET OF

6/15/2021 11:51:09 PM C:\Users\User\Documents\20093 - Aries, 24x40 PC - MainFile - Low Seismic_6.7_CES/AR24D83.rvt

Clip - 2" Sliding (Low)

Note:
- Specify SSR System
- Clip fasteners must be ordered separately.
- 1½" movement in each direction

DESCRIPTION				PRICED PER EACH
PART #	SSR SYSTEM	HEIGHT	WEIGHT EACH	PRICE
HW-2122	Double-Lok®	3 1/16"	50#	✓

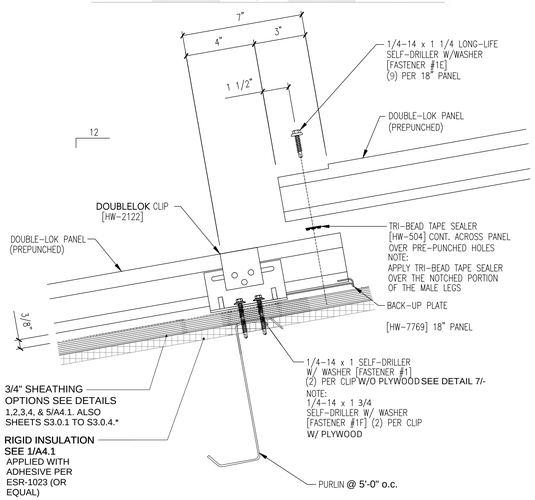

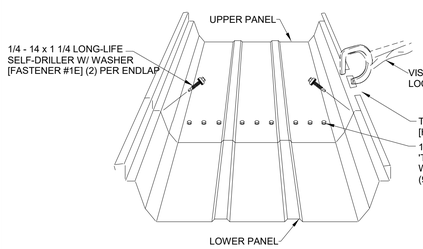

PANEL INSTALLATION SEQUENCE

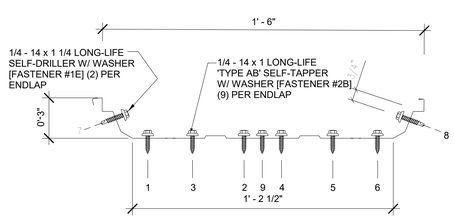

FASTENER SEQUENCE @ ENDLAP

18" DOUBLE-LOK 22GA STANDING SEAM PANEL BY MBCI			
NEG		POS	
t	= 0.0299"	t	= 0.0299"
S_x	= 0.1846 IN^3	S_x	= 0.2154 IN^3
I_x	= 0.2718 IN^4	I_x	= 0.4968 IN^4
F_y	= 50 KSI	F_y	= 50 KSI

FOR ALL METAL ROOFING SYSTEMS USE OR EQUAL

* PLYWOOD UNDERLAY IS USED PER S3.0.1 & S3.0.2 CONDITIONS AND IS OPTIONAL AT THE METAL DECK CONDITIONS PER S3.0.3 & S3.0.4

15

MIAMI-DADE COUNTY NOA NO. 21-0615.07

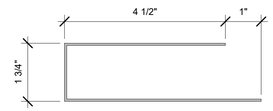

14 *6" = 1'-0"*
FLASHING @ ROOF HIGH SIDE

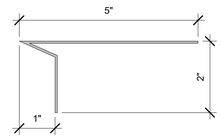

13 *6" = 1'-0"*
FLASHING @ ROOF LOW SIDE

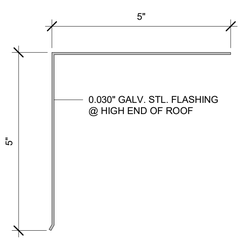

12 *6" = 1'-0"*
ROOF FLASHING

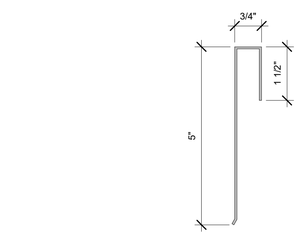

11 *6" = 1'-0"*
ROOF FLASHING @ SIDEWALL

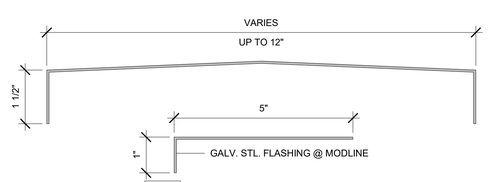

10A *6" = 1'-0"*
FLASHING @ MODLINE WALL

10 *6" = 1'-0"*
ROOF CAP @ MODLINE

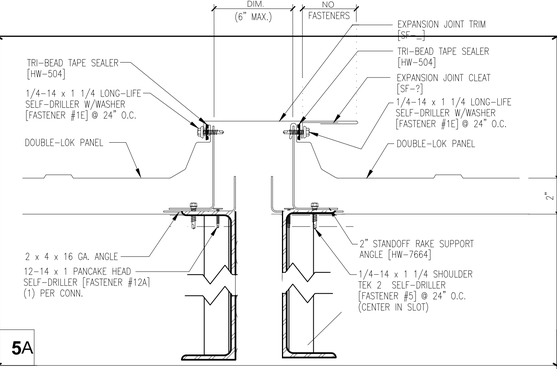

5A

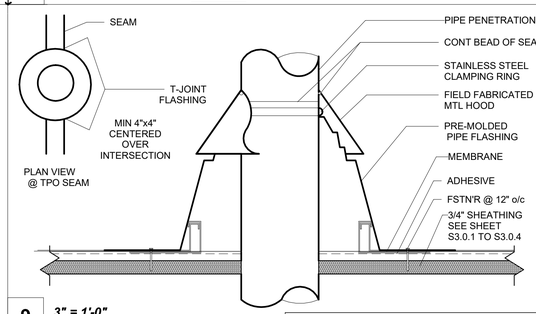

9 *3" = 1'-0"*
Pipe Penetration Standing Seam

ALL FSTN'G & WATER PROOF'G/FLASHING PER MNFR SPECS

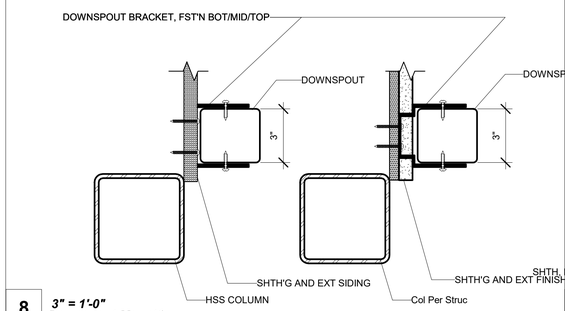

8 *3" = 1'-0"*
Downspout Mount1

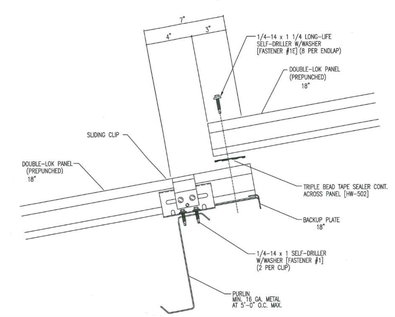

7

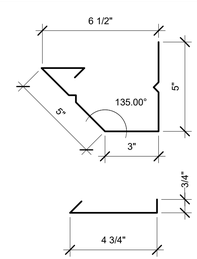

6 *3" = 1'-0"*
Gutter and Strap1

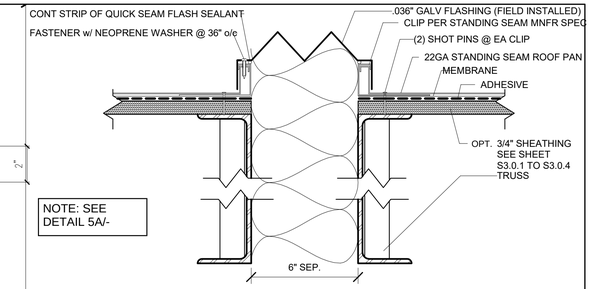

5 *3" = 1'-0"*
Roof @ Mateline Std'g Seam w/ 6" Sep

ALL FSTN'G & WATER PROOF'G/FLASHING PER MNFR SPECS

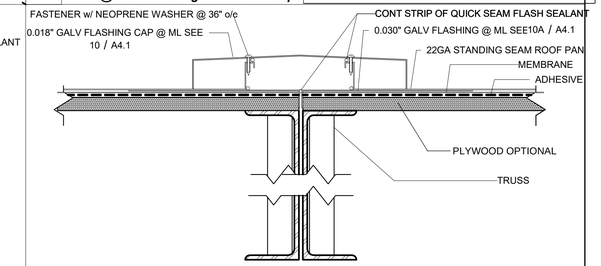

4 *3" = 1'-0"*
Roof @ Standing Seam Mateline

ALL FSTN'G & WATER PROOF'G/FLASHING PER MNFR SPECS

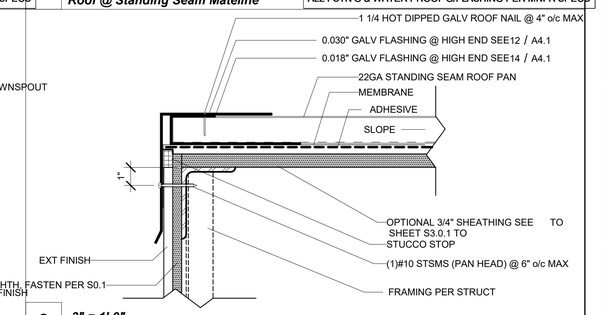

3 *3" = 1'-0"*
Roof @ Endwall Std'g Seam (High End)

ALL FSTN'G & WATER PROOF'G/FLASHING PER MNFR SPECS

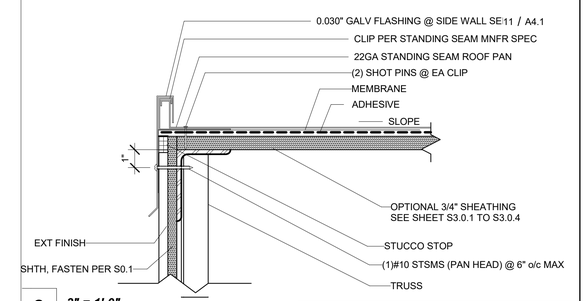

2 *3" = 1'-0"*
Roof @ Standing Seam Sidwall

ALL FSTN'G & WATER PROOF'G/FLASHING PER MNFR SPECS

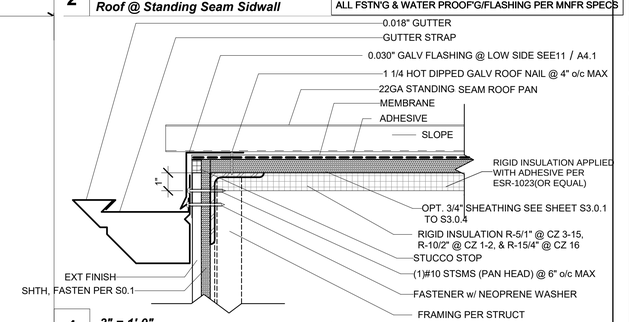

1 *3" = 1'-0"*
Roof @ Endwall Std'g Seam (Low End)

ALL FSTN'G & WATER PROOF'G/FLASHING PER MNFR SPECS

PROJECT SPECIFIC STATE AGENCY APPROVAL

IDENTIFICATION STAMP
DIV. OF THE STATE ARCHITECT
APP: 02-123433 INC: A
REVIEWED FOR
SS ☑ FLS ☑ ACS ☑
DATE: 01/20/2026

R&S TAVARES ASSOCIATES
DESIGN ◆ CONSULTING ◆ PROJECT MGT
11590 W BERNARDO COURT, SUITE 100
SAN DIEGO, CA 92127
WWW.RSTAVARES.COM

PROFESSIONAL STAMP

REGISTERED PROFESSIONAL ENGINEER — MANNY D. FRANCISCO — No. 53380 — 03/31/24 — STRUCTURAL — STATE OF CALIFORNIA

RST#22088

02/16/24

THE PLANS, IDEAS & DESIGNS SHOWN ON THESE DRAWINGS ARE THE PROPERTY OF R&S TAVARES ASSOCIATES, INC. DEVISED SOLELY FOR THIS CONTRACT. THESE PLANS SHALL NOT BE USED, IN WHOLE OR IN PART, FOR ANY PURPOSE FOR WHICH THEY WERE NOT INTENDED WITHOUT THE EXPRESS WRITTEN CONSENT OF R&S TAVARES ASSOCIATES, INC. ©

CLIENT

Class Leasing
1651Juanita Street, San Jacinto, CA 92583
Voice (951) 943-1908 Fax (951)943-5768

ORIGINAL PC STATE AGENCY APPROVAL

APPROVED
DIV. OF THE STATE ARCHITECT
APP: 04-123059 PC
REVIEWED FOR
SS ☑ FLS ☑ ACS ☑ CG ☑
DATE: 02/20/2024

Revision Schedule

#	Description	Date

PRE-CHECK (PC) DOCUMENT

Code: 2022 CBC

A separate project application for construction is required

PROJECT TITLE

PC 2022 CBC: 24' x 40' EXPANDABLE TO 120' x 40'

SHEET TITLE

ROOF DETAILS (STANDING SEAM)

PROJECT NUMBER: 22088

DRAWN BY: rMc/SC

CHECKED BY: RH/RT

DATE:

SHEET NO. A4.1

SHEET OF

6/15/2021 11:51:15 PM C:\Users\User\Documents\20093 - Aries, 24x40 PC - MainFile - Low Seismic_6.7_CESAR24D63.rvt

Ext. Finish Schedule

	Finishes	Sheet	Notes
X	SIDING OVER WD STUDS	A2.1	
□	PLASTER OVER 1/2" OSB OR 1/2" CDX PLY w/ WD STUDS	A2.2	

9 *1/4" = 1'-0"*
Ext. Finish Scedule

Fire Rating Schedule

	Rating	Sheet	Notes
□	1 HOUR - SIDING OVER WD STUDS	A2.5	
□	1 HOUR - PLASTER OVER 1/2" OSB OR 1/2" CDX PLY w/ WD STUDS	A2.6	

SEE A3.0 FOR ADDITIONAL FIRE ASSEMBLY NOTES AND DETAILS

10 *1/4" = 1'-0"*
Fire Rating Scedule

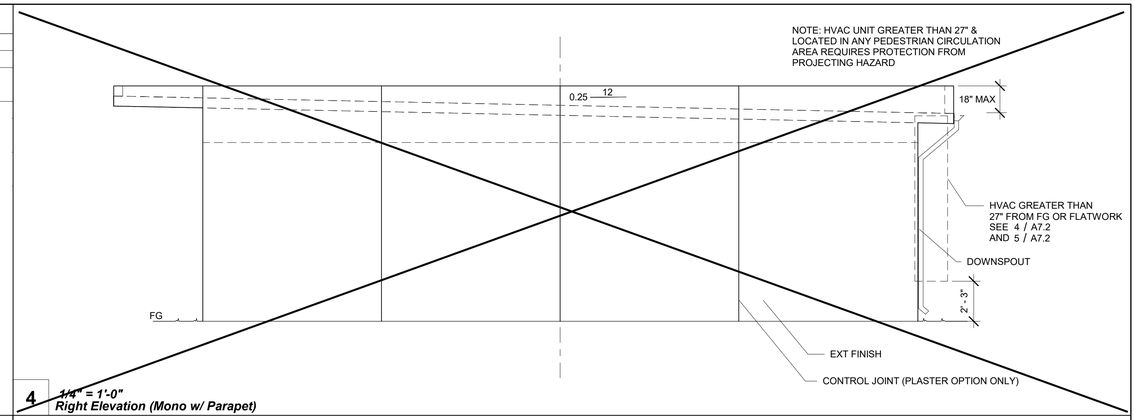

4 *1/4" = 1'-0"*
Right Elevation (Mono w/ Parapet)

SEE A0.1 FOR GENERAL NOTES

7 *3" = 1'-0"*
Notes A5.0

Wall Schedule

	Stud Size	Sheet	Notes
X	Wood Wall Stud	S4.5	

FOR WUI DETAILS SEE
SHEETS: A2.1(B)
A2.3(B)
A2.5(B)
A2.7(B)

8 *1/4" = 1'-0"*
Wall Schedule

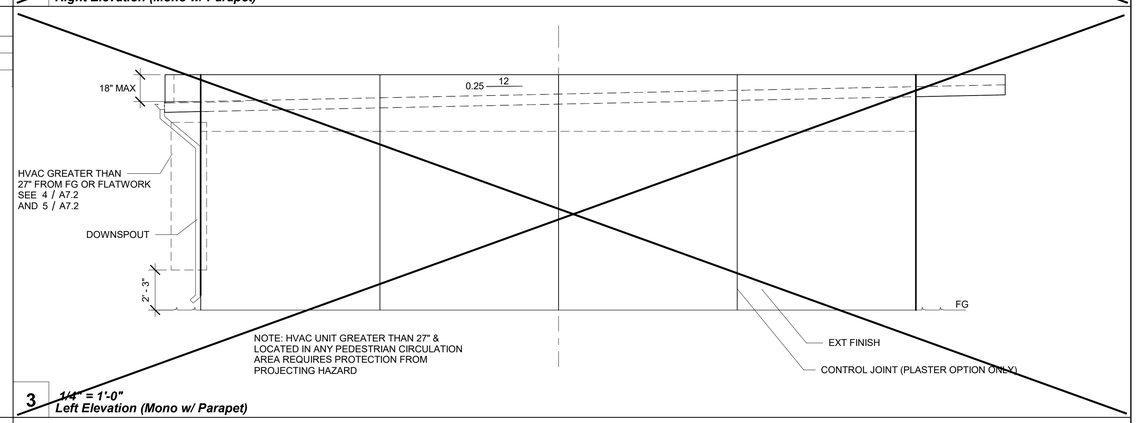

3 *1/4" = 1'-0"*
Left Elevation (Mono w/ Parapet)

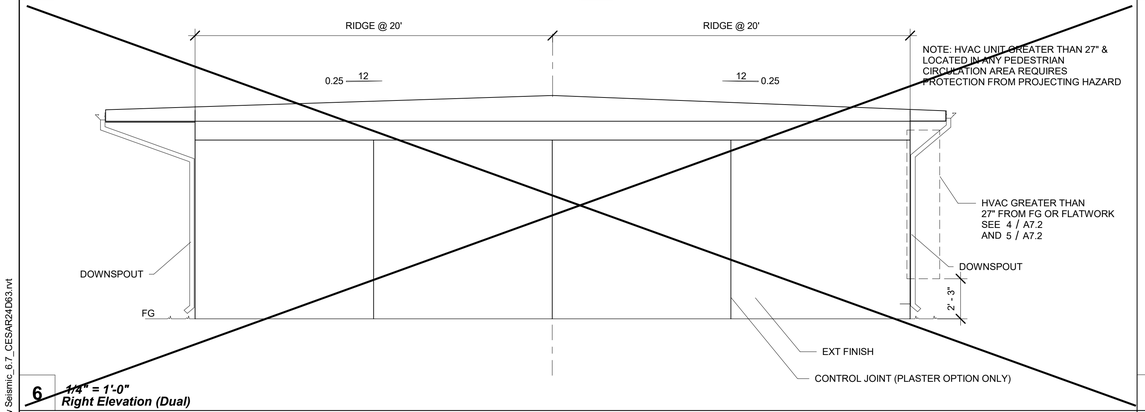

6 *1/4" = 1'-0"*
Right Elevation (Dual)

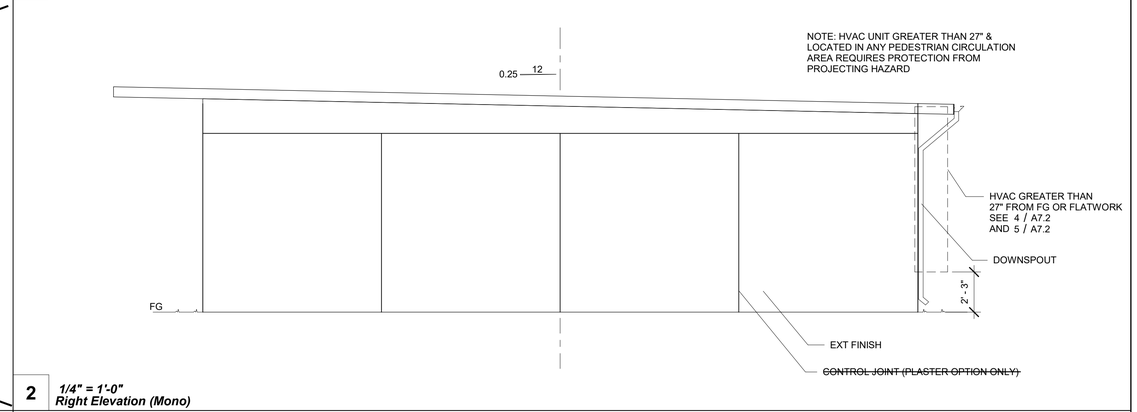

2 *1/4" = 1'-0"*
Right Elevation (Mono)

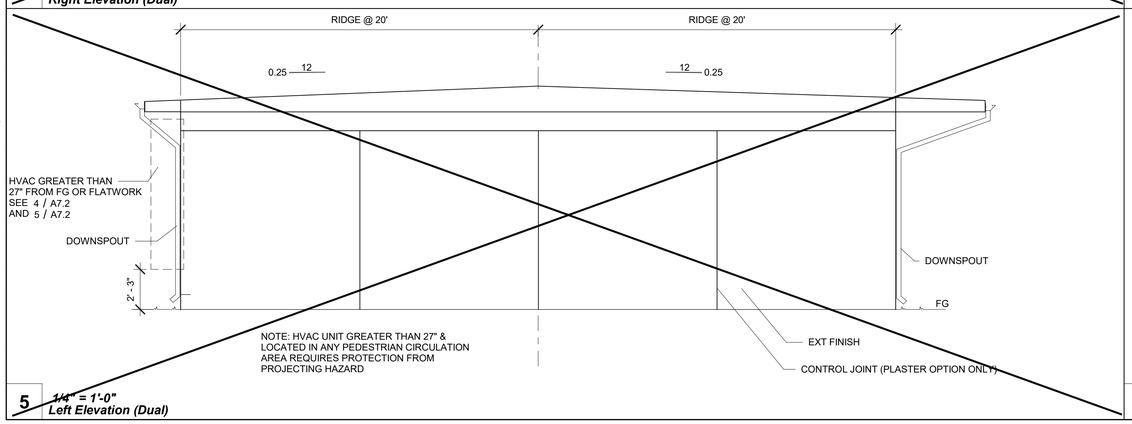

5 *1/4" = 1'-0"*
Left Elevation (Dual)

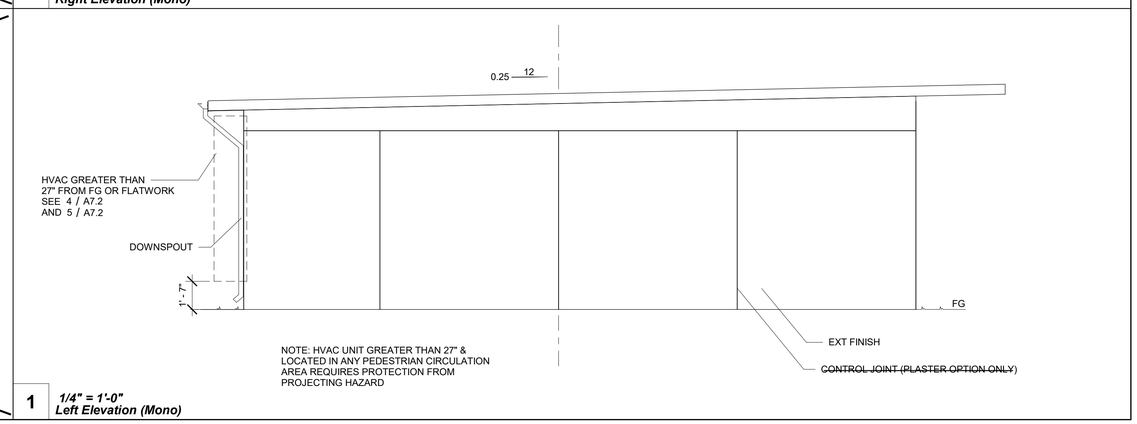

1 *1/4" = 1'-0"*
Left Elevation (Mono)

PROJECT SPECIFIC STATE AGENCY APPROVAL

IDENTIFICATION STAMP
DIV. OF THE STATE ARCHITECT
APP: 02-123433 INC:
REVIEWED FOR
SS ☑ FLS ☑ ACS ☑
DATE: 01/20/2026

R&S TAVARES ASSOCIATES
DESIGN ♦ CONSULTING ♦ PROJECT MGT
11590 W BERNARDO COURT, SUITE 100
SAN DIEGO, CA 92127
WWW.RSTAVARES.COM

PROFESSIONAL STAMP

REGISTERED PROFESSIONAL ENGINEER
JANNY D. FRANCISCO
No. 63380
Exp. 03/31/24
STRUCTURAL
STATE OF CALIFORNIA
RST#22088
02/16/24

THE PLANS, IDEAS & DESIGNS SHOWN ON THESE DRAWINGS ARE THE PROPERTY OF R&S TAVARES ASSOCIATES, INC. DEVISED SOLELY FOR THIS CONTRACT. THESE PLANS SHALL NOT BE USED, IN WHOLE OR IN PART, FOR ANY PURPOSE FOR WHICH THEY WERE NOT INTENDED WITHOUT THE EXPRESS WRITTEN CONSENT OF R&S TAVARES ASSOCIATES, INC. ©

CLIENT

Class Leasing
1651Juanita Street, San Jacinto, CA 92583
Voice (951) 943-1908 Fax (951)943-5768

ORIGINAL PC STATE AGENCY APPROVAL

APPROVED
DIV. OF THE STATE ARCHITECT
APP: 04-123059 PC
REVIEWED FOR
SS ☑ FLS ☑ ACS ☑ CG ☑
DATE: 02/20/2024

Revision Schedule

#	Description	Date

PRE-CHECK (PC) DOCUMENT

Code: 2022 CBC

A separate project application for construction is required

PROJECT TITLE
PC 2022 CBC: 24' x 40' EXPANDABLE TO 120' x 40'

SHEET TITLE
SIDEWALL ELEVATION

PROJECT NUMBER
22088

DRAWN BY
rMc/SC

CHECKED BY
RH/RT

DATE

SHEET NO.
A5.0

SHEET OF

C:\Users\User\Documents\20093 - Aries, 24x40 PC - MainFile - Low Seismic_6_7_CESAR24D63.rvt
6/15/2021 11:51:35 PM

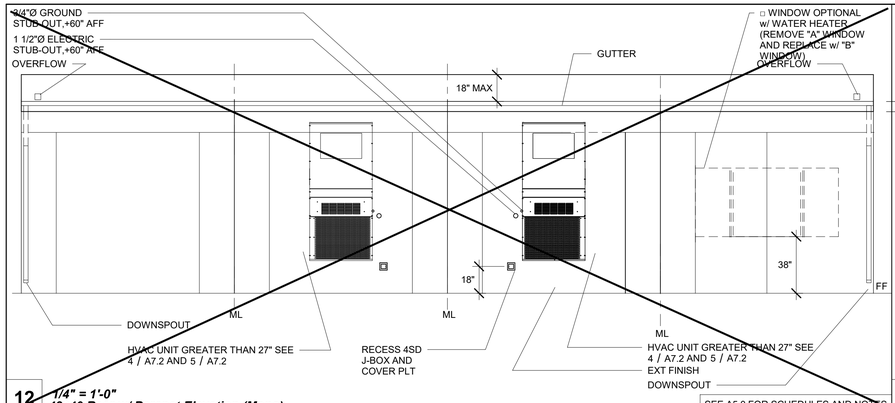

12 *1/4" = 1'-0"*
48x40 Rear w/ Parapet Elevation (Mono)
SEE A5.0 FOR SCHEDULES AND NOTES

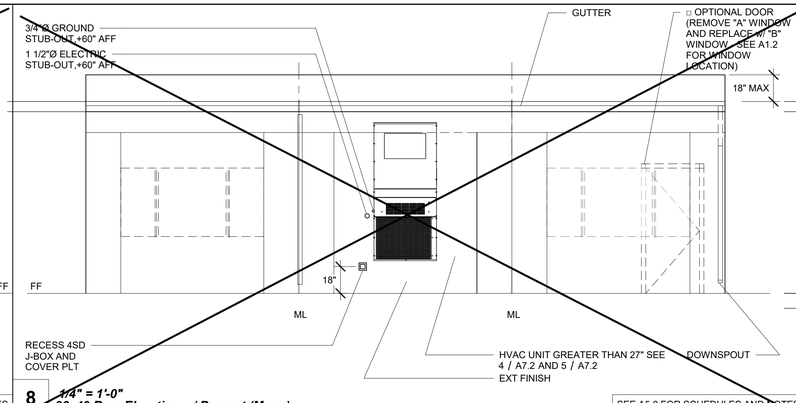

8 *1/4" = 1'-0"*
36x40 Rear Elevation w/ Parapet (Mono)
SEE A5.0 FOR SCHEDULES AND NOTES

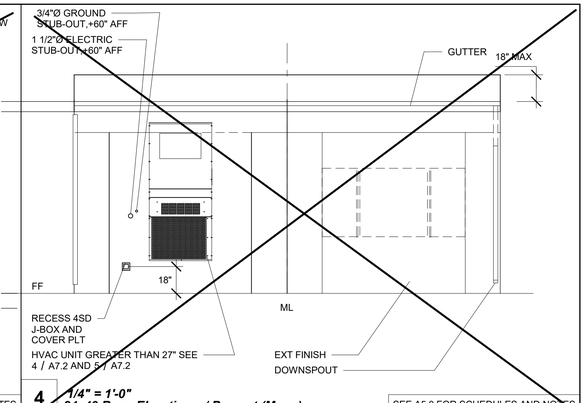

4 *1/4" = 1'-0"*
24x40 Rear Elevation w/ Parapet (Mono)
SEE A5.0 FOR SCHEDULES AND NOTES

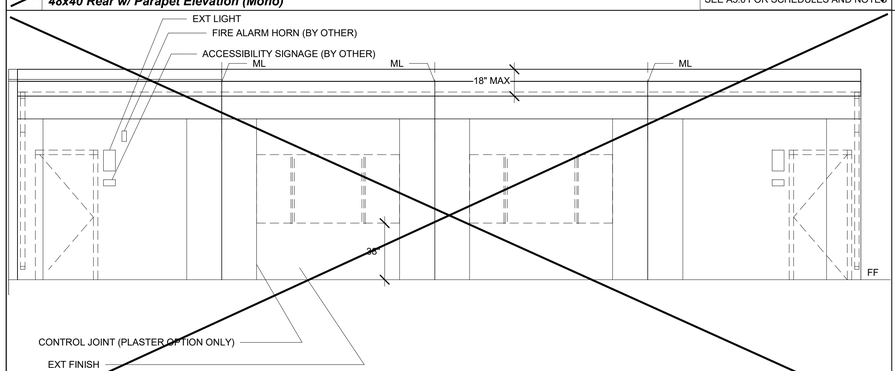

11 *1/4" = 1'-0"*
48x40 Front w/ Parapet Elevation (Mono)
SEE A5.0 FOR SCHEDULES AND NOTES

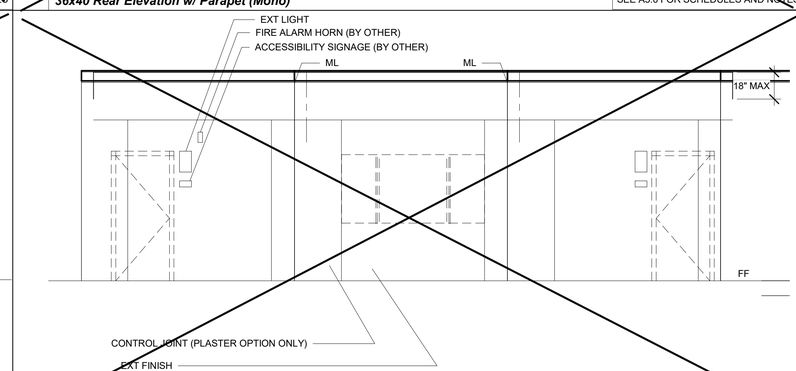

7 *1/4" = 1'-0"*
36x40 Front Elevation w/ Parapet (Mono)
SEE A5.0 FOR SCHEDULES AND NOTES

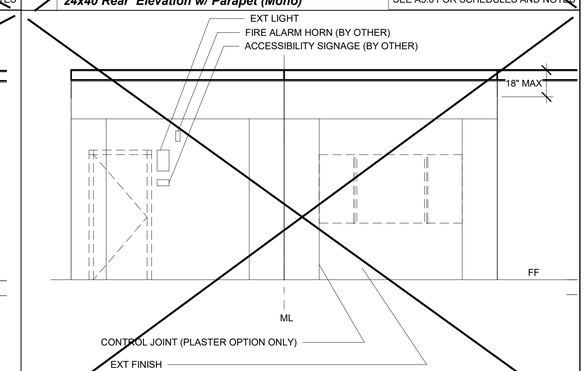

3 *1/4" = 1'-0"*
24x40 Front Elevation w/ Parapet (Mono)
SEE A5.0 FOR SCHEDULES AND NOTES

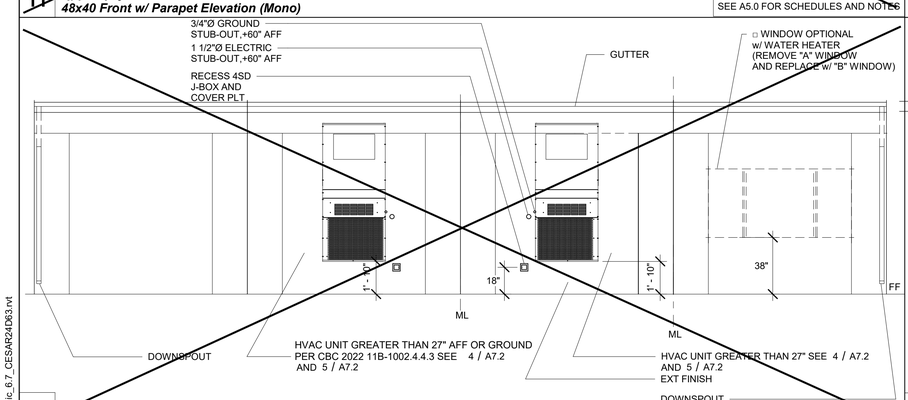

10 *1/4" = 1'-0"*
48x40 Rear Elevation (Dual/Mono)
SEE A5.0 FOR SCHEDULES AND NOTES

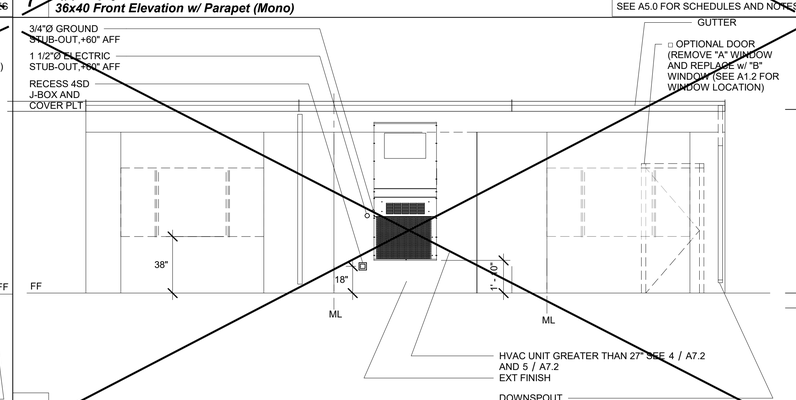

6 *1/4" = 1'-0"*
36x40 Rear Elevation (Dual/Mono)
SEE A5.0 FOR SCHEDULES AND NOTES

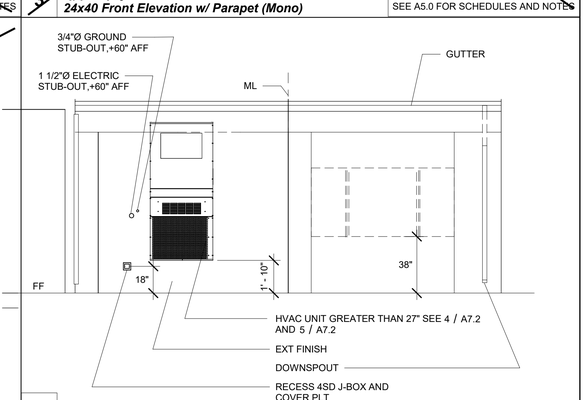

2 *1/4" = 1'-0"*
24x40 Rear Elevation ~~(Dual~~/Mono)
SEE A5.0 FOR SCHEDULES AND NOTES

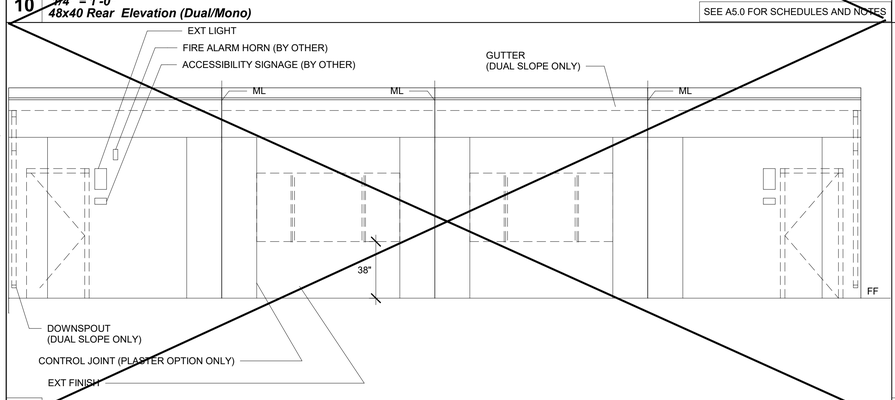

9 *1/4" = 1'-0"*
48x40 Front Elevation (Dual/Mono)
SEE A5.0 FOR SCHEDULES AND NOTES

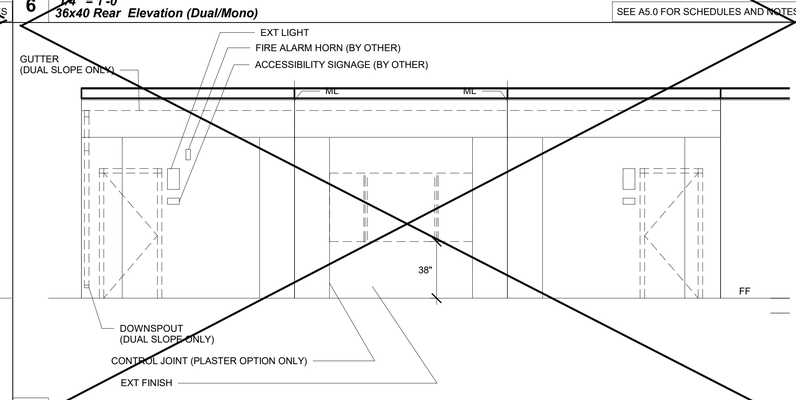

5 *1/4" = 1'-0"*
36x40 Front Elevation (Dual/Mono)
SEE A5.0 FOR SCHEDULES AND NOTES

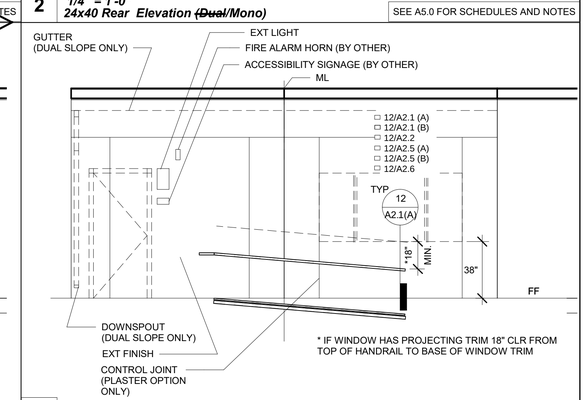

1 *1/4" = 1'-0"*
24x40 Front Elevation ~~(Dual~~/Mono)
SEE A5.0 FOR SCHEDULES AND NOTES

PROJECT SPECIFIC STATE AGENCY APPROVAL

IDENTIFICATION STAMP
DIV. OF THE STATE ARCHITECT
APP: 02-123433 INC: A
REVIEWED FOR
SS ☑ FLS ☑ ACS ☑
DATE: 01/20/2026

R&S TAVARES ASSOCIATES
DESIGN ◆ CONSULTING ◆ PROJECT MGT
11590 W Bernardo Court, Suite 100
San Diego, CA 92127
www.rstavares.com

PROFESSIONAL STAMP

REGISTERED PROFESSIONAL ENGINEER
JANET D. FRANCISCO
No. 63380
Exp. 03/31/24
CIVIL STRUCTURAL
STATE OF CALIFORNIA
RST#22088
02/16/24

THE PLANS, IDEAS & DESIGNS SHOWN ON THESE DRAWINGS ARE THE PROPERTY OF R&S TAVARES ASSOCIATES, INC. DEVISED SOLELY FOR THIS CONTRACT. THESE PLANS SHALL NOT BE USED, IN WHOLE OR IN PART, FOR ANY PURPOSE FOR WHICH THEY WERE NOT INTENDED WITHOUT THE EXPRESS WRITTEN CONSENT OF R&S TAVARES ASSOCIATES, INC. ©

CLIENT

Class Leasing
1651Juanita Street, San Jacinto, CA 92583
Voice (951) 943-1908 Fax (951)943-5768

ORIGINAL PC STATE AGENCY APPROVAL

APPROVED
DIV. OF THE STATE ARCHITECT
APP: 04-123059 PC
REVIEWED FOR
SS ☑ FLS ☑ ACS ☑ CG ☑
DATE: 02/20/2024

Revision Schedule

#	Description	Date

PRE-CHECK (PC) DOCUMENT

Code: 2022 CBC

A separate project application for construction is required

PROJECT TITLE
PC 2022 CBC: 24' x 40' EXPANDABLE TO 120' x 40'

SHEET TITLE
ENDWALL ELEVATIONS

PROJECT NUMBER
22088

DRAWN BY
rMc/SC

CHECKED BY
RH/RT

DATE

SHEET NO.
A5.1

SHEET OF

C:\Users\User\Documents\20093 - Aries, 24x40 PC - MainFile - Low Seismic_6.7_CES\R24D63.rvt

6/15/2021 11:51:44 PM

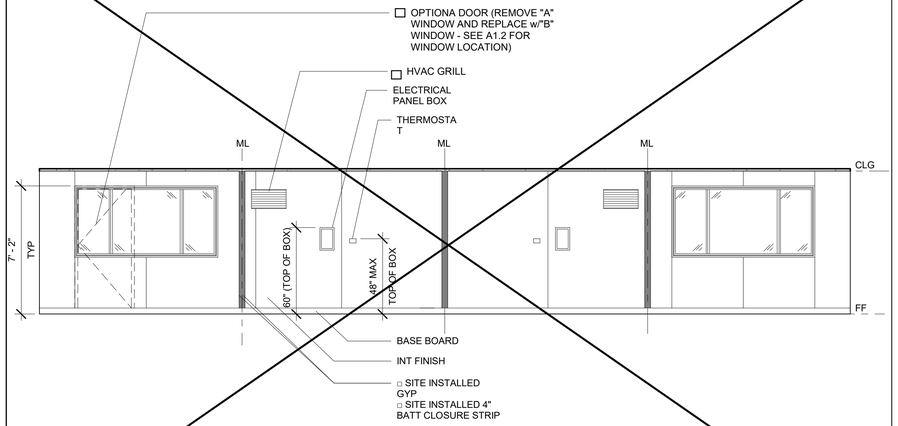

7 *1/4" = 1'-0"*
48x40 Rear Interior Elevation

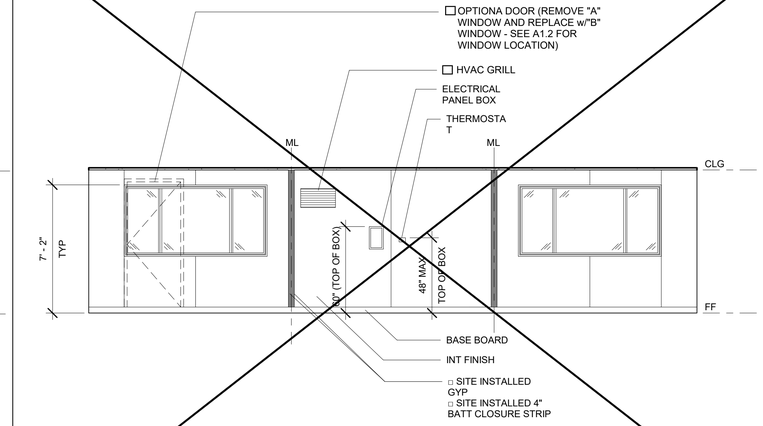

6 *1/4" = 1'-0"*
36x40 Rear Interior Elevation

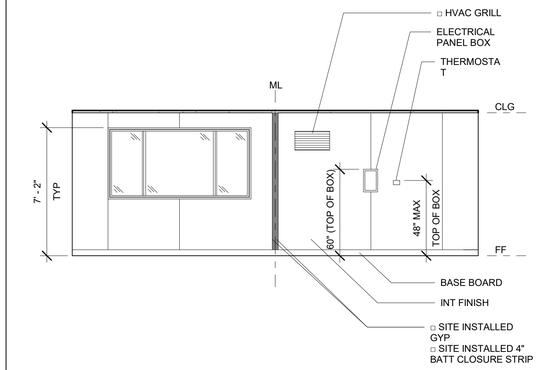

4 *1/4" = 1'-0"*
24x40 Rear Interior Elevation

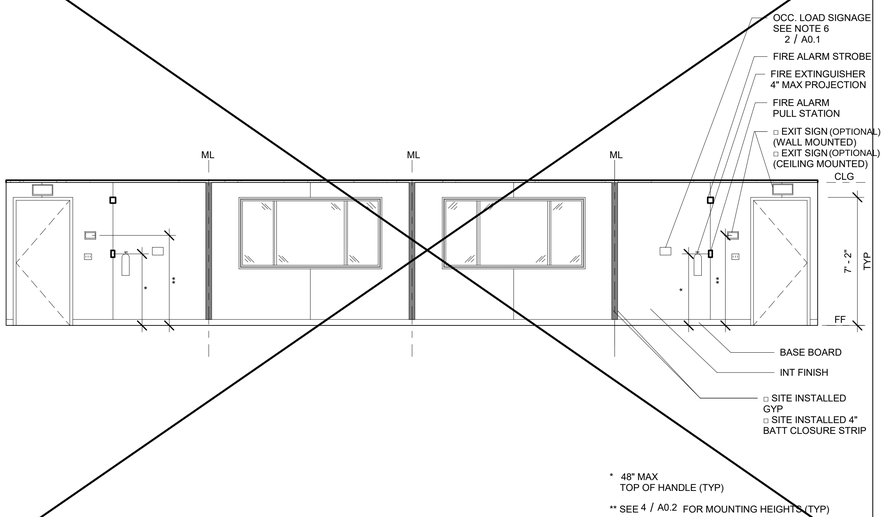

8 *1/4" = 1'-0"*
48x40 Front Interior Elevation

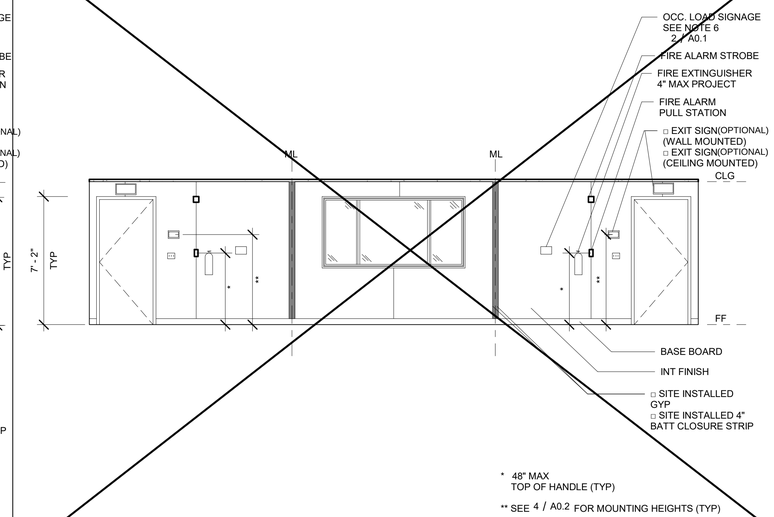

5 *1/4" = 1'-0"*
36x40 Front Interior Elevation

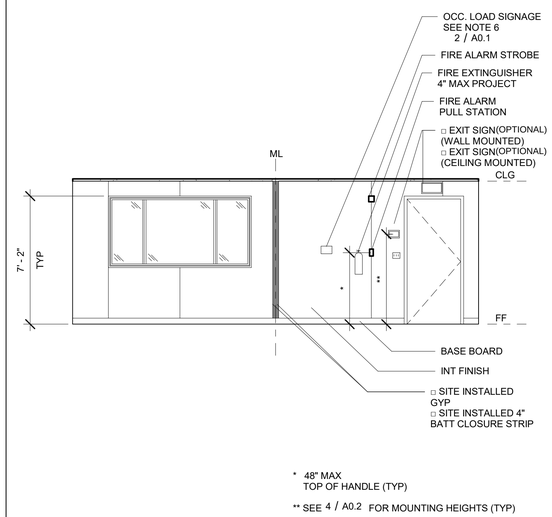

3 *1/4" = 1'-0"*
24x40 Front Interior Elevation

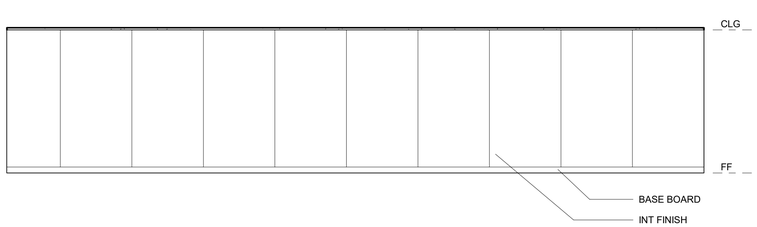

1 *1/4" = 1'-0"*
Interior Elevation (Left)

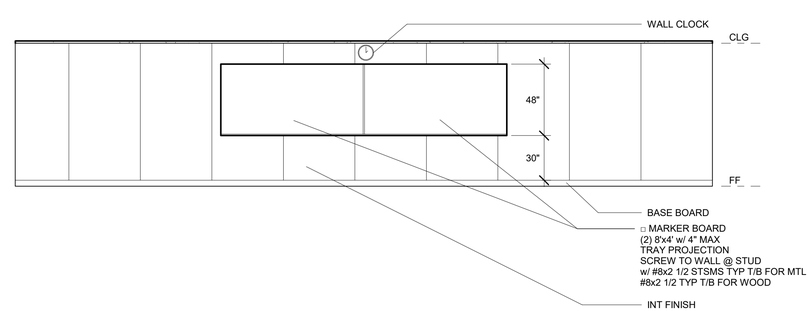

2 *1/4" = 1'-0"*
Interior Elevation (Right)

6/15/2021 11:51:46 PM C:\Users\User\Documents\20093 - Aries, 24x40 PC - MainFile - Low Seismic_6_7_CES4R24D63.rvt

PROJECT SPECIFIC STATE AGENCY APPROVAL

IDENTIFICATION STAMP
DIV. OF THE STATE ARCHITECT
APP: 02-123433 INC: A
REVIEWED FOR
SS ☑ FLS ☑ ACS ☑
DATE: 01/20/2026

R&S TAVARES ASSOCIATES
DESIGN ★ CONSULTING ★ PROJECT MGT
11590 W Bernardo Court, Suite 100
San Diego, CA 92127
www.rstavares.com

PROFESSIONAL STAMP

REGISTERED PROFESSIONAL ENGINEER
MANNY D. FRANCISCO
No. 63380
Exp. 03/31/24
STRUCTURAL
STATE OF CALIFORNIA
RST#22088
02/16/24

THE PLANS, IDEAS & DESIGNS SHOWN ON THESE DRAWINGS ARE THE PROPERTY OF R&S TAVARES ASSOCIATES, INC. DEVISED SOLELY FOR THIS CONTRACT. THESE PLANS SHALL NOT BE USED, IN WHOLE OR IN PART, FOR ANY PURPOSE FOR WHICH THEY WERE NOT INTENDED WITHOUT THE EXPRESS WRITTEN CONSENT OF R&S TAVARES ASSOCIATES, INC. ©

CLIENT

Class Leasing
1651Juanita Street, San Jacinto, CA 92583
Voice (951) 943-1908 Fax (951)943-5768

ORIGINAL PC STATE AGENCY APPROVAL

APPROVED
DIV. OF THE STATE ARCHITECT
APP: 04-123059 PC
REVIEWED FOR
SS ☑ FLS ☑ ACS ☑ CG ☑
DATE: 02/20/2024

Revision Schedule

#	Description	Date

PRE-CHECK (PC) DOCUMENT

Code: 2022 CBC

A separate project application for construction is required

PROJECT TITLE
PC 2022 CBC: 24' x 40' EXPANDABLE TO 120' x 40'

SHEET TITLE
INTERIOR ELEVATIONS

PROJECT NUMBER
22088

DRAWN BY
rMc/SC

CHECKED BY
RH/RT

DATE

SHEET NO.
A5.2

SHEET OF

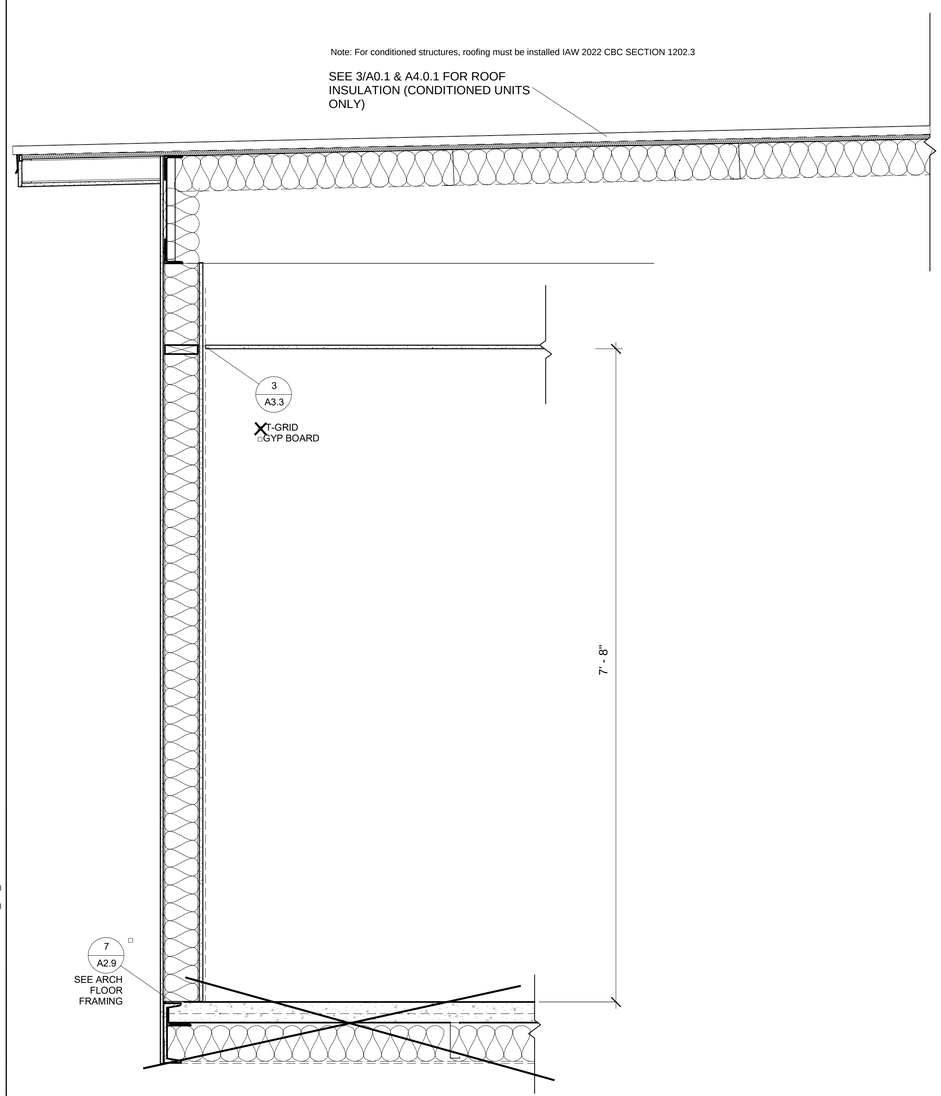

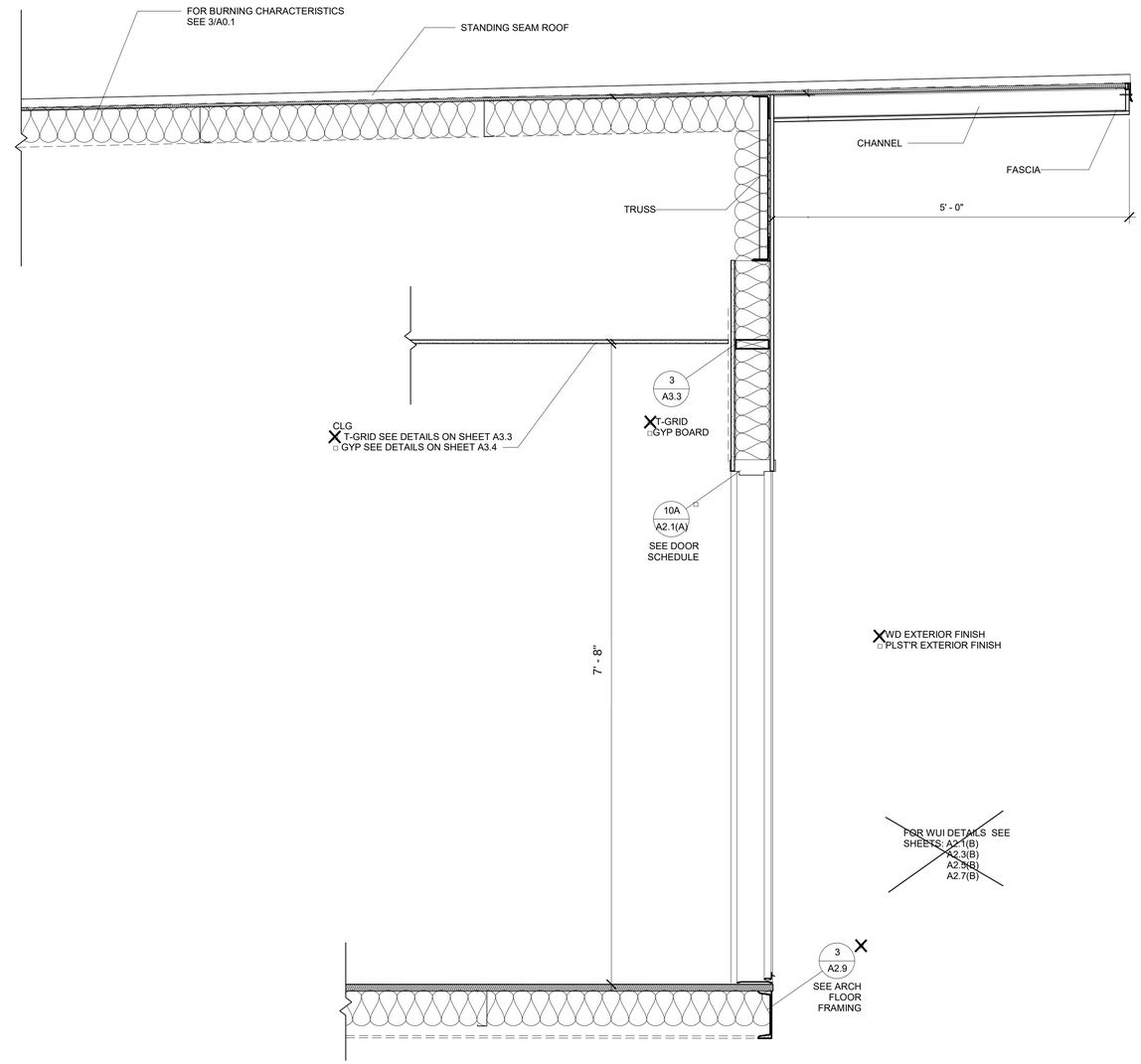

REFER TO SHEET AA2.3 FOR SITE SPECIFIC SECTION

1 *1" = 1'-0"*
Section (EPDM)2

6/15/2021 11:51:47 PM C:\Users\User\Documents\20093 - Aries, 24x40 PC - MainFile - Low Seismic_6_7_CESAR24D63.rvt

PROJECT SPECIFIC STATE AGENCY APPROVAL

IDENTIFICATION STAMP
DIV. OF THE STATE ARCHITECT
APP: 02-123433 INC:
REVIEWED FOR
SS ☑ FLS ☑ ACS ☑
DATE: 01/20/2026

R&S TAVARES ASSOCIATES
DESIGN ◆ CONSULTING ◆ PROJECT MGT
11590 W BERNARDO COURT, SUITE 100
SAN DIEGO, CA 92127
WWW.RSTAVARES.COM

PROFESSIONAL STAMP

REGISTERED PROFESSIONAL ENGINEER
MANNY D. FRANCISCO
No. 63380
Exp. 03/31/24
STRUCTURAL
STATE OF CALIFORNIA
RST#22088
02/16/24

THE PLANS, IDEAS & DESIGNS SHOWN ON THESE DRAWINGS ARE THE PROPERTY OF R&S TAVARES ASSOCIATES, INC. DEVISED SOLELY FOR THIS CONTRACT. THESE PLANS SHALL NOT BE USED, IN WHOLE OR IN PART, FOR ANY PURPOSE FOR WHICH THEY WERE NOT INTENDED WITHOUT THE EXPRESS WRITTEN CONSENT OF R&S TAVARES ASSOCIATES, INC. ©

CLIENT

Class Leasing
1651Juanita Street, San Jacinto, CA 92583
Voice (951) 943-1908 Fax (951)943-5768

ORIGINAL PC STATE AGENCY APPROVAL

APPROVED
DIV. OF THE STATE ARCHITECT
APP: 04-123059 PC
REVIEWED FOR
SS ☑ FLS ☑ ACS ☑ CG ☑
DATE: 02/20/2024

Revision Schedule

#	Description	Date

PRE-CHECK (PC) DOCUMENT

Code: 2022 CBC

A separate project application for construction is required

PROJECT TITLE
PC 2022 CBC: 24' x 40' EXPANDABLE TO 120' x 40'

SHEET TITLE
SECTION - STANDING SEAM (MONO)

PROJECT NUMBER
22088

DRAWN BY
rMc/SC

CHECKED BY
RH/RT

DATE

SHEET NO.
A6.0

SHEET OF

Note: For conditioned structures, roofing must be installed IAW 2022 CBC SECTION 1202.3

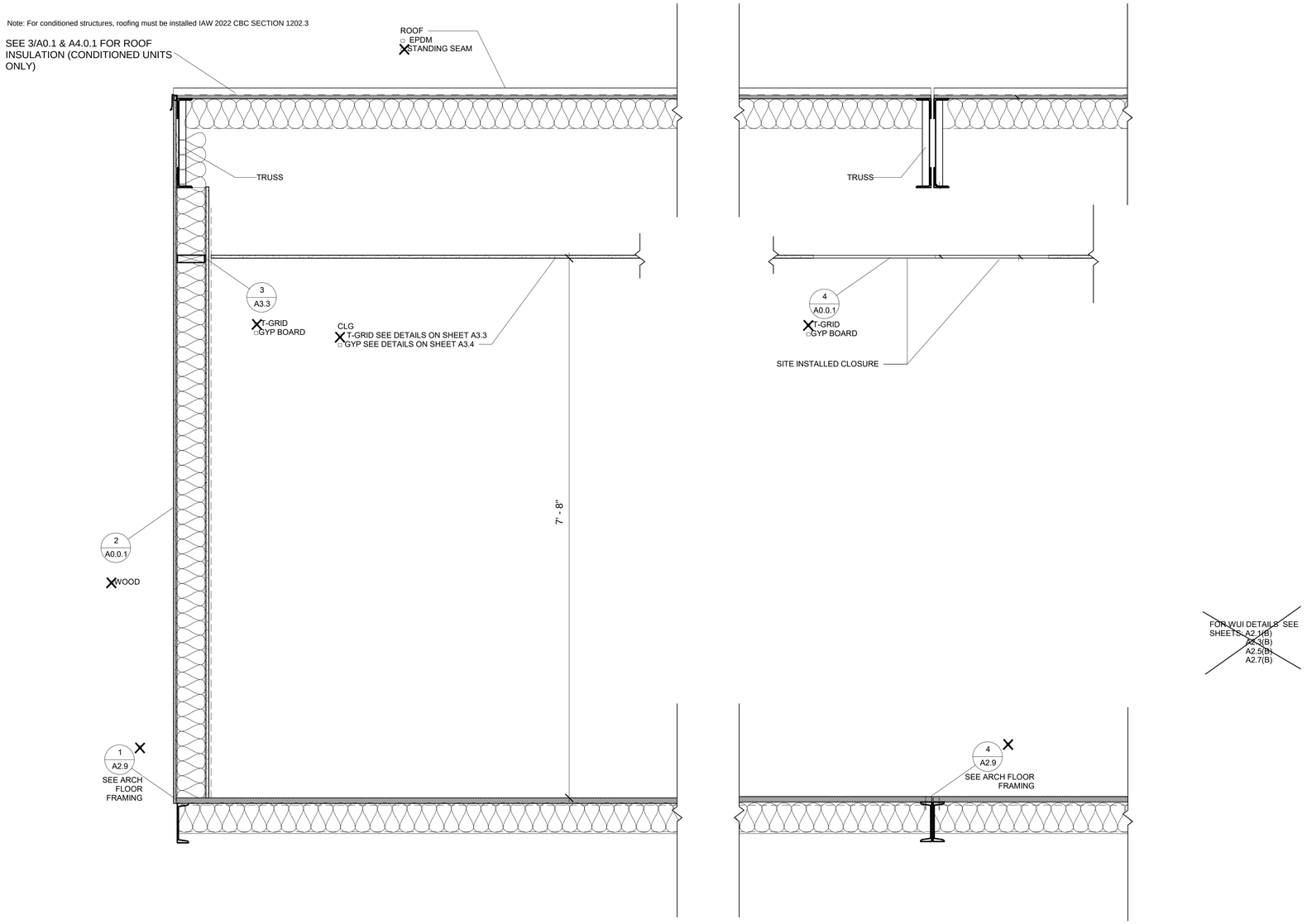

FOR WUI DETAILS SEE SHEETS: A2.1(B) A2.3(B) A2.5(B) A2.7(B)

REFER TO SHEET AA2.3 FOR SITE SPECIFIC SECTION

1 *1" = 1'-0"*
Latitudinal Section

6/15/2021 11:51:52 PM C:\Users\User\Documents\20093 - Aries, 24x40 PC - MainFile - Low Seismic_6.7_CESAR24D83.rvt

PROJECT SPECIFIC STATE AGENCY APPROVAL

IDENTIFICATION STAMP
DIV. OF THE STATE ARCHITECT
APP: 02-123433 INC:
REVIEWED FOR
SS ☑ FLS ☑ ACS ☑
DATE: 01/20/2026

R&S TAVARES ASSOCIATES
DESIGN ◆ CONSULTING ◆ PROJECT MGT
11590 W BERNARDO COURT, SUITE 100
SAN DIEGO, CA 92127
WWW.RSTAVARES.COM

PROFESSIONAL STAMP

REGISTERED PROFESSIONAL ENGINEER
MANNY D. FRANCISCO
No. 63380
Exp. 03/31/24
STRUCTURAL
STATE OF CALIFORNIA
RST#22088
02/16/24

THE PLANS, IDEAS & DESIGNS SHOWN ON THESE DRAWINGS ARE THE PROPERTY OF R&S TAVARES ASSOCIATES, INC. DEVISED SOLELY FOR THIS CONTRACT. THESE PLANS SHALL NOT BE USED, IN WHOLE OR IN PART, FOR ANY PURPOSE FOR WHICH THEY WERE NOT INTENDED WITHOUT THE EXPRESS WRITTEN CONSENT OF R&S TAVARES ASSOCIATES, INC. ©

CLIENT

Class Leasing
1651Juanita Street, San Jacinto, CA 92583
Voice (951) 943-1908 Fax (951)943-5768

ORIGINAL PC STATE AGENCY APPROVAL

APPROVED
DIV. OF THE STATE ARCHITECT
APP: 04-123059 PC
REVIEWED FOR
SS ☑ FLS ☑ ACS ☑ CG ☑
DATE: 02/20/2024

Revision Schedule

#	Description	Date

PRE-CHECK (PC) DOCUMENT

Code: 2022 CBC

A separate project application for construction is required

PROJECT TITLE
PC 2022 CBC: 24' x 40' EXPANDABLE TO 120' x 40'

SHEET TITLE
SECTION

PROJECT NUMBER
22088

DRAWN BY
rMc/SC

CHECKED BY
RH/RT

DATE

SHEET NO.
A6.2

SHEET OF

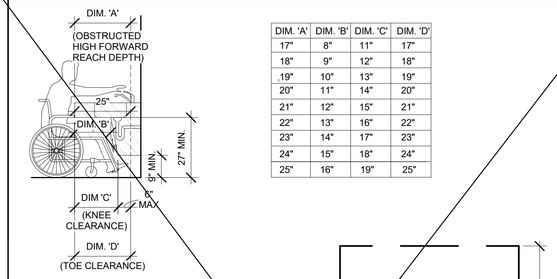

DIM. 'A'	DIM. 'B'	DIM. 'C'	DIM. 'D'
17"	8"	11"	17"
18"	9"	12"	18"
19"	10"	13"	19"
20"	11"	14"	20"
21"	12"	15"	21"
22"	13"	16"	22"
23"	14"	17"	23"
24"	15"	18"	24"
25"	16"	19"	25"

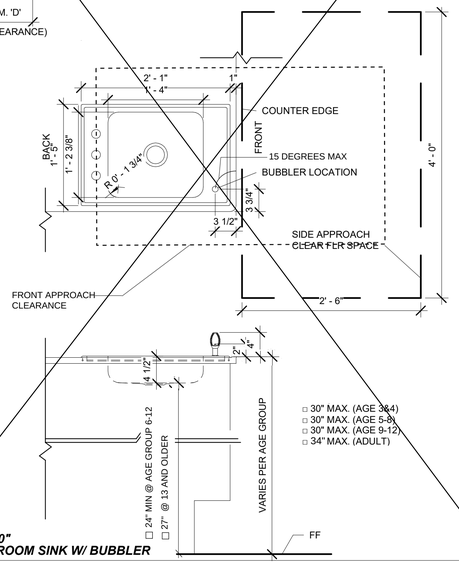

10 *1" = 1'-0"*
CLASSROOM SINK W/ BUBBLER

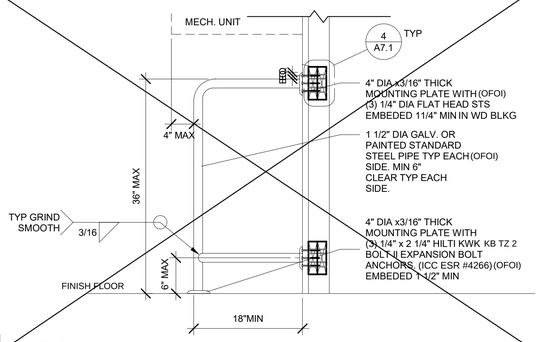

5 *1" = 1'-0"*
HVAC BARRIER at wood stud

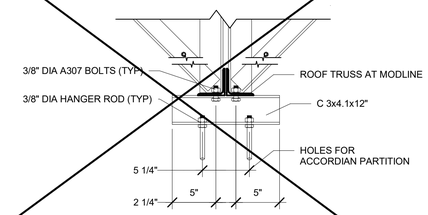

2 *1 1/2" = 1'-0"*
ACCORDIAN DOOR - TOP CONN AT TRUSS

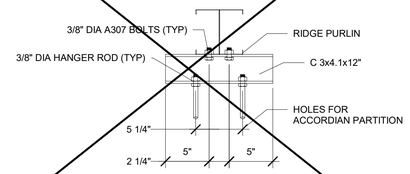

1 *1 1/2" = 1'-0"*
ACCORDIAN DOOR - TOP CONN AT PURLIN

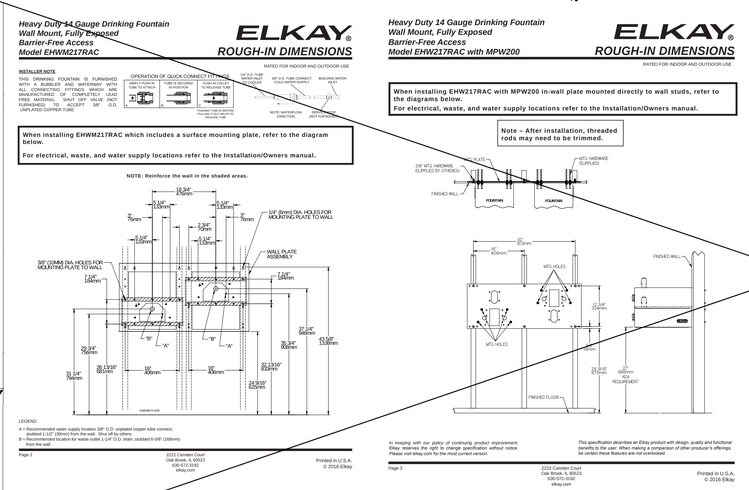

6 *N.T.S*
ELKAY EXAMPLE OF MOUNTING ELEVATION

NOTES FOR THIS OWNER FURMINSHED OWNER INSTALLED DRINKING FOUNTAIN:

1. FINAL PRODUCT SELECTION IS OWNER RESPONSIBILITY.
2. MOUNTING REQUIREMENTS WILL VARY BY MANUFACTURER'S INSTALLATION INSTRUCTIONS
3. THE ELKAY SHEETS PROVIDED IN THIS SET ARE FOR EXAMPLE PURPOSES ONLY.
4. FINAL PRODUCT SELECTION MUST BE SUBMITTED ALONG WITH SITE SPECIFIC CONSTRUCTION APPLICATION FOR REVIEW
5. MOUNTING HARDWARE SHALL PROVIDE A MINIMUM OF 2" PENETRATION INTO WOOD FRAMING
.

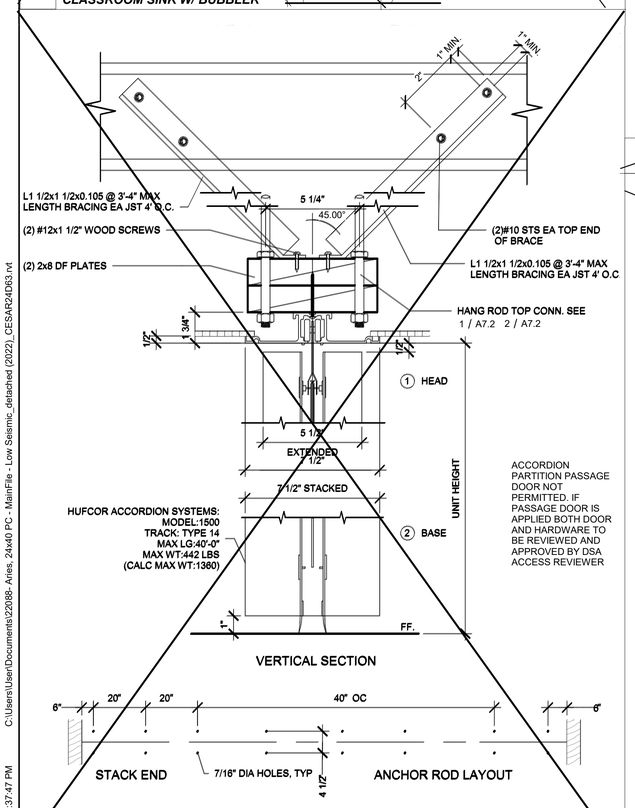

3 *3" = 1'-0"*
OPTION FOR ACCORDION PARTITION ATTACHMENT

11B-602.6 WATER FLOW. THE SPOUT PROVIDE A FLOW OF WATER 4 INCHES (102mm) high minimum and shall be located 5 inches (127 mm) maximum from the front of the unit. The angle of the water stream shall be measured horizontally relative to the front face of the unit. Where spouts are located less than 3 inches (76 mm) of the front of the unit, the angle of the water stream shall be 30 degrees maximum. Where spouts are located between 3 inches (76 mm) and inches (127 mm) maximum from the front of the unit, the angle of the water stream shall be 15 degrees maximum

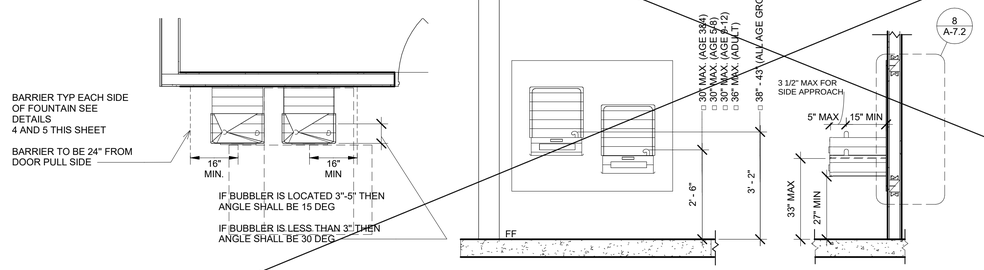

7 *1/2" = 1'-0"*
Drinking Fountain Blocking Detail wood stud

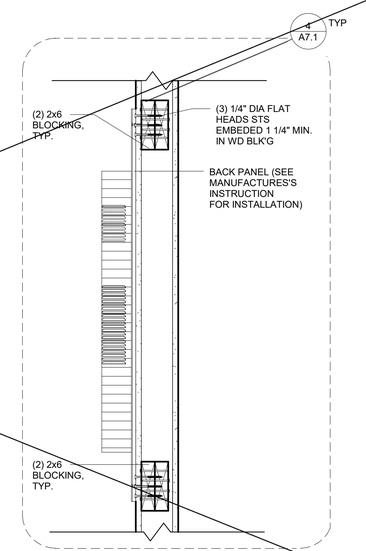

8 *1 1/2" = 1'-0"*
Section Cut 1A/A-5.2

PROJECT SPECIFIC STATE AGENCY APPROVAL

IDENTIFICATION STAMP
DIV. OF THE STATE ARCHITECT
APP: 02-123433 INC:
REVIEWED FOR
SS ☑ FLS ☑ ACS ☑
DATE: 01/20/2026

R&S TAVARES ASSOCIATES
DESIGN ♦ CONSULTING ♦ PROJECT MGT
11590 W BERNARDO COURT, SUITE 100
SAN DIEGO, CA 92127
WWW.RSTAVARES.COM

PROFESSIONAL STAMP

REGISTERED PROFESSIONAL ENGINEER
MANNY D. FRANCISCO
No. 13380
Exp. 03/31/24
STRUCTURAL
STATE OF CALIFORNIA
RST#22088
02/16/24

THE PLANS, IDEAS & DESIGNS SHOWN ON THESE DRAWINGS ARE THE PROPERTY OF R&S TAVARES ASSOCIATES, INC. DEVISED SOLELY FOR THIS CONTRACT. THESE PLANS SHALL NOT BE USED, IN WHOLE OR IN PART, FOR ANY PURPOSE FOR WHICH THEY WERE NOT INTENDED WITHOUT THE EXPRESS WRITTEN CONSENT OF R&S TAVARES ASSOCIATES, INC. ©

CLIENT

Class Leasing
1651Juanita Street, San Jacinto, CA 92583
Voice (951) 943-1908 Fax (951)943-5768

ORIGINAL PC STATE AGENCY APPROVAL

APPROVED
DIV. OF THE STATE ARCHITECT
APP: 04-123059 PC
REVIEWED FOR
SS ☑ FLS ☑ ACS ☑ CG ☑
DATE: 02/20/2024

Revision Schedule

#	Description	Date

PRE-CHECK (PC) DOCUMENT

Code: 2022 CBC

A separate project application for construction is required

PROJECT TITLE
PC 2022 CBC: 24' x 40' EXPANDABLE TO 120' x 40'

SHEET TITLE
ADDITIONAL OPTION DETAILS

PROJECT NUMBER
22088

DRAWN BY
rMc/SC

CHECKED BY
RH/RT

DATE

SHEET NO.
A7.2

SHEET OF

C:\Users\User\Documents\22088- Aries, 24x40 PC - MainFile - Low Seismic_detached (2022)_CESAR24D63.rvt

8/1/2023 1:37:47 PM

WIRE SIZE	CAPACITY	WIRE TYPE	NO. OF CONDUCTOR PERMITTED 1/2" C	3/4" C	1" C	1 1/4" C
#12	20A	THHN	9	16	25	45
#10	30A	THHN	5	10	16	28
#8	45A	THHN	2	5	8	14
#6	65A	THHN	1	3	5	10
#4	85A	THHN	1	2	4	7

(ALL CONDUCTORS SHALL BE TYPE THHN/THWN 75 DEG. C. COPPER)

1 CONDUIT FILL AND CONDUCTOR CAPACITY TABLE

BOX	SIZE	CU. IN.	MAX NO. OF CONDUCTORS #12	#10	#8	#6
4SS	1 1/4"x4" SQ	18.0	8	7	6	0
4S	1 1/2"x4" SQ	21.0	9	8	7	0
4SD	2 1/8"x4" SQ	30.3	13	12	10	6
4SX	2 7/8"x4" SQ	43.5	23	21	17	10
5SD	2 1/8"x4-11/16" SQ	42.0	18	16	14	6
5SX	3 7/8"x4-11/16" SQ	86.0	38	34	28	17
664	4"x6" SQ	144.0	64	57	48	28

* DEDUCT ONE CONDUCTOR FOR (1) OR MORE GROUNDING CONDUCTORS ENTERING THE BOX

2 JUNCTION BOX SIZE TABLE

915.4 CARBON MONOXIDE ALARMS. CARBON MONOXIDE ALARMS SHALL COMPLY WITH SECTIONS 915.4.1 THROUGH 915.4.4.

[F] 915.4.1 POWER SOURCE. CARBON MONOXIDE ALARMS SHALL RECEIVE THEIR PRIMARY POWER FROM THE BUILDING WIRING WHERE SUCH WIRING IS SERVED FROM A COMMERCIAL SOURCE, AND WHEN PRIMARY POWER IS INTERRUPTED, SHALL RECEIVE POWER FROM BATTERY. WIRING SHALL BE PERMANENT AND WITH-OUT A DISCONNECTING SWITCH OTHER THAN REQUIRED FOR OVERCURRENT PROTECTION.

915.2.3 GROUP E OCCUPANCIES. CARBONS MONOXIDE DETECTION SHALL BE INSTALLED IN CLASSROOMS IN GROUP E OCCUPANCIES. CARBON MONOXIDE ALARM SIGNALS SHALL BE AUTOMATICALLY TRANSMITTED TO AN ON-SITE LOCATION THAT IS STAFFED BY SCHOOL PERSONNEL.

915.3 DETECTION EQUIPMENT. CARBON MONOXIDE DETECTION REQUIRED BY SECTIONS 915.1 THROUGH 915.2.3 SHALL BE PROVIDED BY CARBON MONOXIDE DETECTION SYSTEMS COMPLYING WITH SECTION 915.5.

3 CARBON MONOXIDE DETECTION - SECTION 915

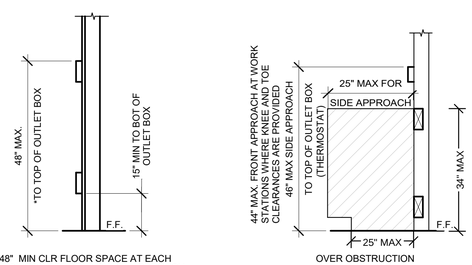

* 30"x48" MIN CLR FLOOR SPACE AT EACH LOCATION FOR PERPENDICULAR APPROACH

OVER OBSTRUCTION

THE KNEE/TOE SPACE MUST EXTEND TO THE SAME DEPTH AS THE ACCESSIBLE OUTLET/SWITCH LOCATED ABOVE- 25" MAX 11.B308.2.2

4 MOUTING ELEV.

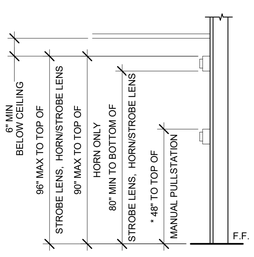

NOTES:

1. PROVIDE MIN 30"x48" CLR FLOOR SPACE FOR PERPENDICULAR APPROACH AT EACH LOCATION.

2. THE SWITCH OR SWITCHES INSTALLED IN EMERGENCY LIGHTING CIRCUITS SHALL BE SO ARRANGED THAT ONLY AUTHORIZED PERSONNEL WILL HAVE CONTROL OF EMERGENCY LIGHTING. (CEC art. 700.20)

3. PROVIDE SPACE ON ELECTRICAL PANEL FOR LOCK-ON BREAKER, IDENTIFIED WITH RED MARKING. FOR 120 VOLTS FIRE ALARM CIRCUIT, WITH BREAKER LABELED AS FIRE ALARM CIRCUIT, CEC 760.41 (B). BREAKER AND CIRCUIT PROVIDED AND INSTALLED ON SITE BY OTHERS.

4. SMOKE AND HEAT DETECTOR CONDUIT AND DEVICES TO BE PROVIDED AND INTERCONNECTED TO THE FIRE ALARM SYSTEMS ON SITE BY OTHERS.

5. APPROVAL OF THIS PLAN DOES NOT CONSTITUTE APPROVAL OF THIS FIRE ALARM SYSTEM FOR ALL SITES, THE FIRE ALARM SYSTEM AND COMPONENTS MAYBE REQUIRED TO BE CHANGED DUE TO EXISTING CONDITIONS OR INCOMPATIBLE COMPONENTS.

5 FIRE ALARM MOUNTING HEIGHTS

ACCEPTANCE TESTS BE COMPLETED ON NEWLY INSTALLED OR REPLACEMENT OF LIGHTING CONTROLS BEFORE PROJECT COMPLETION PER THE CALIFORNIA ENERGY CODE SECTION 10-103. ACCEPTANCE TESTS MUST BE PERFORMED BY A CERTIFIED ACCEPTANCE TEST TECHNICIAN (ATT). THE ACCEPTANCE TESTING PROCEDURES MUST BE REPEATED, AND DEFICIENCES CORRECTED UNTIL THE INSTALLATION OF THE SPECIFIED SYSTEMS CONFORM AND PASS THE REQUIRED ACCEPTANCE CRITERIA. COMPLETED NRCA FORMS SHALL BE SUBMITTED TO THE PROJECT INSPECTOR AND THE DISTRICT

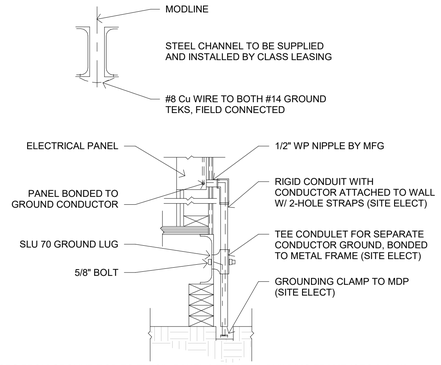

NOTES:

1. BOND SEPARATE CONDUCTORS FROM GROUND ROD TO ELEC'L. PANEL & TO METAL BUILDING FRAME (CEC 250.52) IN ADDITION TO THE DETAIL SHOWN ABOVE. BOND THE ELECTRICAL GROUND TO METAL UNDERGROUND WATER PIPE IN DIRECT CONTACT WITH THE EARTH FOR 10 FT. OR MORE, IF AVAILABLE (CEC 250.52)

2. TESTING FOR RESISTANCE TO GROUND, IF RESISTANCE EXCEEDS 25 OHMS INSTALL ADDITIONAL GROUND RODS SEPARATED AT LEAST 6 FEET, UNTIL RESISTANCE REDUCES TO 25 OHMS OR LESS. GROUND TEST MUST BE DONE IN THE PRESENCE OF THE PROJECT INSPECTOR AND ALL GROUNDING SHALL BE IN ACCORDANCE WITH CEC ARTICLE 250.56

3. ELEC. TRADE SHALL CHECK AREA FOR EXISTING CONDUITS, SEWER, GAS & WATER PIPING BEFORE DRIVING GROUND RODS.

4. ALL MODULES OF STEEL FRAME BLDGS. SHALL BE ELECTRICALLY BONDED TOGETHER (BOLTING ONLY IS NOT ACCEPTABLE BONDING). BONDING SHALL INCLUDE METAL RAMP & STAIRS.

5. SIZE OF CONDUCTORS SHALL COMPLY WITH CEC TABLE 250.66

6. EACH BUILDING SHALL BE GROUNDED SEPARARELY WITH A ¾" ROUND X 8 FEET COPPERCLAD STEEL GROUND ROD. WHERE ROCK BOTOOM IS FOUND, DRIVE ROD AT 45 DEGREES MAXIMUM FROM THE VERTICAL OR HAVE IT BURIED IN A TRENCH 30" DEEP MINIMUM.

ACCEPTANCE TESTS BE COMPLETED ON NEWLY INSTALLED OR REPLACEMENT OF LIGHTING CONTROLS BEFORE PROJECT COMPLETION PER THE CALIFORNAI ENERGY CODE SECTION 10-103. ACCEPTANCE TESTS MUST BE PERFORMED BY A CERTIFIED ACCEPTANCE TEST TECHNICIAN (ATT). THE ACCEPTANCE TESTING PROCEDURES MUST BE REPEATED, AND DEFICIENCIES CORRECTED UNTIL THE INSTALLATION OF THE SPECIFIED SYSTEMS CONFORM AND PASS THE REQUIRED ACCEPTANCE CRITERIA. COMPLETED NRCA FORMS SHALL BE SUBMITTED TO THE PROJECT INSPECTOR AND THE DISTRICT.

6 TYPICAL GROUNDING DETAILS

REFER TO DSA IR 16-8 & STATE FIRE MARSHAL SOLAR PHOTOVOLTAIC INSTALLATION GUIDELINE

REFER TO **SECTION 110.10 - MANDATORY REQUIREMENTS FOR SOLAR READY BUILDINGS**
SOLAR ZONE AREAS WILL VARY DEPENDING ON PC BUILDING LOCATION.

MINIMUM AREA:

15% OF ROOF AREA (EXCLUDING ANY SKYLIGHT AREA) TO BE RESERVED FOR SOLAR PANEL APPLICATION OR SOLAR READY WILL BE SUPPLIED FROM A BUILDING OR STRUCTURE WITHIN 250 FT OF PC BUILDING.

ORIENTATION:

ALL SECTIONS OF THE SOLAR ZONE LOCATED ON STEEP-SLOPED ROOFS GREATER THAN 2:12 SHALL BE ORIENTED BETWEEN 110 DEGREES AND 270 DEGREES OF TRUE NORTH.

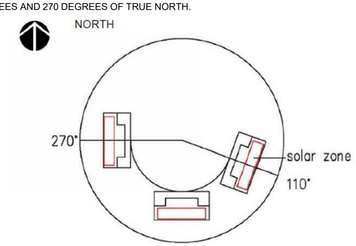

SHADING:

ANY OBSTRUCTION, LOCATED ON THE ROOF OR ANY OTHER PART OF THE BUILDING THAT PROJECTS ABOVE THE SOLAR ZONE SHALL BE LOCATED AT A SUFFICIENT HORIZONTAL DISTANCE AWAY FROM THE SOLAR ZONE, IN ORDER TO REDUCE THE RESULTING SHADING OF THE SOLAR ZONE. FOR EACH OBSTRUCTION, THE HORIZONTAL DISTANCE ("D") FROM THE OBSTRUCTION TO THE SOLAR ZONE SHALL BE AT LEAST TWO TIMES THE HEIGHT DIFFERENCE ("H") BETWEEN THE HIGHEST POINT OF THE OBSTRUCTION AND THE HORIZONTAL PROJECTION OF THE NEAREST POINT OF THE SOLAR ZONE.

D ≥ 2 x H

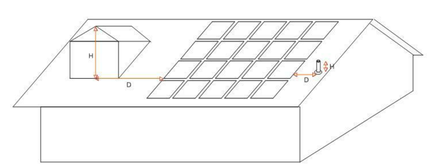

SOURCE: CALIFORNIA ENERGY COMMISSION

STRUCTURAL DESIGN LOADS:

ENTIRE ROOF SURFACE IS DESIGNED STRUCTURALLY TO ACCOMMODATE SOLAR PANELS = 3 PSF

INTERCONNECTION PATHWAYS:

THE LOCATION FOR INVERTERS AND METERING EQUIPMENT AND A PATHWAY FOR ROUTING OF CONDUIT FROM THE SOLAR ZONE TO THE POINT OF INTERCONNECTION WITH THE ELECTRICAL SERVICE WILL VARY DEPENDING ON PC BUILDING LOCATION.

7 SOLAR ZONE AREA

LEGEND

- ELECTRICAL PANEL AT +60" AFF TO TOP OF ELECTRICAL PANEL WITH 1 1/2" DIA POWER STUB OUT
- ROOF MOUNTED HVAC UNIT-SEE MECHANICAL DWGS
- WALL MOUNTED HVAC UNIT, SEE MECHANICAL DWGS
- 100 CFM CEILING MOUNTED EXHAUST FAN. INTERLOCKED WITH LIGHT SWITCH
- HM — 4SD J-BOX FOR WATER HEATER LOCATE ABOVE CEILING W/ COVER PLATE, HARD WIRE TO UNIT
  4SD J-BOX IN ATTIC FOR ATTIC MOUNTED HEAT DETECTOR (DEVICE BY OTHERS). MAXIMUM 35'-0" FROM ANY POINT IN ATTIC BUT NOT MORE THAN 25'-0" FROM TWO PERPENDICULAR WALL AND 50'-0" BETWEEN THEM. PROVIDE A 6'-0" CONDUIT FROM EACH J-BOX TO HEAT DETECTOR LOCATION. CONDUIT & CONNECTION TO CEILING DEVICE & DEVICE BY OTHERS (ALARM NOTE #1)
- H — 4SD J-BOX IN ATTIC FOR CEILING MOUNTED SMOKE DETECTOR (DEVICE BY OTHERS). MAXIMUM 21'-0" FROM ANY POINT IN ROOM BUT NOT MORE THAN 15'-0" TO A PERPENDICULAR WALL AND 30'-0" BETWEEN THEM. PROVIDE A 6'-0" CONDUIT FROM EACH J-BOX TO SMOKE DETECTOR LOCATION. CONDUIT & CONNECTION TO CEILING DEVICE & DEVICE BY OTHERS (ALARM NOTE #1)
- S — RECESSED 4SD J-BOX W/ COVER PLATE FOR FUTURE FIRE ALARM SYSTEM BY OTHERS. MOUNT AT +18" AFF U.O.N. TO CENTERLINE OF BOX AND PROVIDE 1" CO STUB TO ATTIC SPACE WITH PULL STRING
- 4SD J-BOX WITH SINGLE GANG RING FOR DATA USE. (DEVICE BY OTHERS) MOUNT AT +18" AFF WITH 3/4" CONDUIT STUBBED TO ATTIC
- H — 4SD J-BOX FOR EXTERIOR FIRE ALARM HORN (DEVICE BY OTHERS). MOUNT AT +90" AFF TO TOP OF DEVICE WITH 3/4" CONDUIT STUBBED TO ATTIC WITH PULLSTRING
- 4SD J-BOX/SINGLE GANG MUD RING FOR FIRE ALARM STROBE (DEVICE BY OTHERS).
  BOTTOM OF LENS 80" MIN TOP OF LENS 96" MAX AFF WITH 3/4"CONDUIT TO EXTERIOR FIRE ALARM HORN WITH PULLSTRING
- 4SD J-BOX/ SINGLE GANG MUD RING FOR FIRE ALARM PULL STATION (DEVICE BY OTHERS). MOUNT AT +48" AFF TO TOP OF CONTROL BOX WITH 3/4" CONDUIT TO FIRE ALARM STROBE WITH PULLSTRING
- EXIT — EXIT SIGN WITH BATTERY BACK UP. EXIT SIGN REQUIRED FOR CLASSROOMS WITH TWO OR MORE EXTERIOR DOORS. FLS 90' BACK UP. CLASSROOMS WITH ONE EXTERIOR DOOR-OPTIONAL.
- CLOCK OUTLET AT +90" AFF TO CENTERLINE OF DEVICE
- EXTERIOR LED LIGHT FIXTURE. 30w MAX WITH PHOTOCELL MOUNT AT +93" AFF
- ROOF — ROOF MOUNTED WEATHER PROOF GFI RECEPTACLE
- GFI — GROUND FAULT CIRCUIT INTERRUPT RECEPTACLE WITHIN 6'-0" OF ALL SINKS
- WP — EXTERIOR WEATHER PROOF GFI RECEPTACLE AT +24" AFF FOR A/C SERVICES (MAX 25'-0" FROM UNITS)
- DUPLEX (WALL MOUNTED) RECEPTACLE 15A-125V-3 WIRE. MOUNT AT +15" AFF U.O.N. TO BOTTOM OF OUTLET BOX — MIN. + 15" TO BOTTOM OF BOX
- $3 — 3-WAY LIGHT SWITCH. MOUNT AT+48" AFF TO TOP OF SWITCH BOX
- $ — LIGHT SWITCH. MOUNT AT+48" AFF TO TOP OF SWTICH BOX
- $D — SINGLE BUTTON DIMMER SWITCH, AT +48" AFF, TO TOP OF SWITCH BOX, WATTSTOPPER #LMDM-101 OR EQUAL
- WS-1 — SINGLE SWITCH WALL OCCUPANCY SENSOR. WATTSTOPPER PW-100 OR EQUAL. SENSOR TO BE MOUNTED AT +44" AFF AND USE FOR OPEN ROOM (OR RESTROOM) LESS THAN 100 SQ FT W/ (1) CIRCUIT.AS NEEDED
- US — ULTRASONIC CEILING OCCUPANCY SENSOR. WATTSTOPPER W-500A OR EQUAL. SENSOR TO BE CONNECTED TO KEYED LIGHT SWITCHES FOR MANUAL OVERRIDE AND USE FOR RESTROOM W/ PARTITIONS.AS NEEDED
- PC — CEILING MOUNTED PHOTOCELL, WATTSTOPPER #LMLS-500 OR EQUAL AS NEEDED
- OS — CEILING MOUNTED OCCUPANCY SENSOR. WATTSTOPPER #LMPC-100 OR EQUAL.AS NEEDED
- IS — 4SD J-BOX WITH SINGLE GANG RING FOR SPEAKER USE. (DEVICE BY OTHERS) MOUNT AT +96" AFF WITH 3/4" CONDUIT STUBBED TO ATTIC
- IC — 4SD J-BOX WITH SINGLE GANG RING FOR CAMERA USE. (DEVICE BY OTHERS) MOUNT AT +96" AFF WITH 3/4" CONDUIT STUBBED TO ATTIC
- IW — 4SD J-BOX WITH DOUBLE GANG RING FOR WIFI USE. (DEVICE BY OTHERS) MOUNT IN CIELING WITH 3/4" CONDUIT STUBBED TO ATTIC
- 2x4 CEILING LIGHT WITH (3) LED PANELIGHT, LAY-IN LIGHT FIXTURE WITH DIMMABLE BALLAST
  DIMI LIGHTING-MODEL DM-P72448W-40K-ZZ
  WATTAGE: 48W (48" LG) OR EQUAL
- 2x4 CEILING LIGHT WITH (3) LED PANELIGHT, LAY-IN LIGHT FIXTURE WITH DIMMABLE BALLAST
  DIMI LIGHTING-MODEL DM-P72448W-40K-ZZ
  WATTAGE: 48W (48" LG) OR EQUAL
  EACH LIGHT FIXTURE WHICH IS INDICATED AS BEING AN EMERGENCY LIGHT SHALL HAVE A BALLAST BATTERY PACK INSTALLED ON THE FIXTURE. THE BATTERY PACK SHALL PROVIDE POWER TO A SINGLE LAMP WITHIN THE FIXTURE FOR NO LESS THAN 90 MINUTES. ANY LIGHT FIXTURE Equipped WITH A BATTERY PACK SHALL BE WIRED IN SUCH A MANNER THAT THE BATTERY WILL BE ACTIVATED IMMEDIATELY UPON LOSS OF POWER TO THE FIXTURE. ADDITIONALLY THE BATTERY PACK SHALL BE OPERATED USING BATTERY POWER LIGHTING CONTROL SWITCHES AND SENSORS SHALL NOT BE ABLE TO SHUT THE FIXTURE OFF.

NOTE: SEE 4/A3.2 FOR PHOTOMETRIC DATA

8 ELECTRICAL LEGEND 1" = 1'-0"

1. INSTALLATION SHALL BE IN ACCORDANCE WITH THE NATIONAL ELECTRICAL CODE (NEC) - 2020 EDITION AND NATIONAL FIRE PROTECTION ASSOCIATION FIRE CODES (NFPA). AND 2022 CBC ELECTRICAL CODE.

2. ELECTRICAL EQUIPMENT LOCATIONS INDICATED ARE SHOWN DIAGRAMMATICALLY, EXACT LOCATION SHALL BE VERIFIED AND ADJUSTED FOR FIELD CONDITIONS.

3. RECEPTACLES AND TELEPHONE/DATA OUTLETS SHALL BE INSTALLED 18" AFF TO THE CENTER OF THE DEVICE, UNLESS NOTED OTHERWISE.

4. CONTRACTOR SHALL FIELD TEST AND PROVIDE TEST REPORT VERIFYING THAT RECEPTACLES ARE WIRED AND FUCTION PROPERLY.

5. CONTRACTOR SHALL LABEL EACH RECEPTACLE, LIGHT FIXTURE, TOGGLE SWITCH, SAFETY SWITCH AND OCCUPANCY SENSOR WITH PANEL NAME AND BRANCH CIRCUIT ID.

6. WEATHERPROOF RECEPTACLES SHALL BE TYPE TO PROTECT RECEPTACLE FROM WEATHER WHEN PLUG INSERTED.

7. THE MATERIAL REQUIRED FOR THE WORK SHALL BE CONTRACTOR FURNISHED AND CONTRACTOR INSTALLED, UNLESS SPECIFICALLY NOTED OTHERWISE. CONTRACTOR SHALL ASSUME NOTES LISTING MATERIAL AND/OR EQUIPMENT BEGIN WITH THE WORDS "SUPPLY AND INSTALL" U.O.N..

8. CONTRACTOR SHALL VERIFY EXISTING CONDITIONS BEFORE SUBMITTING MATERIAL AND BECOME THOROUGHLY FAMILIAR WITH ACTUAL EXISTING CONDITIONS AT THE SITE. BY THE ACT OF SUBMITTING PROPOSED MATERIALS FOR THE WORK, THE CONTRACTOR SHALL BE DEEMED TO HAVE MADE SUCH STUDY AND EXAMINATION AND TO ACCEPT ALL CONDITIONS RESENT AT THE SITE. NO REQUEST FOR ADDITIONAL PAYMENT WILL BE CONSIDERED AS VALID, DUE TO FAILURE TO ALLOW FOR CONDITIONS, WHICH MAY EXIST.

9. CONTRACTOR'S SCOPE SHALL INCLUDE ALL WORK SHOWN ON THE PLANS AND SPECIFICATIONS. SUBSTITUTION REQUESTS FOR EQUIPMENT SPECIFIED SHALL BE SUBMITTED FOR CONSIDERATION TO THE OWNER AND ENGINEER IN WRITING. ALL SUBSTITUTIONS MUST BE REVIEWED BY THE ENGINEER. SUCH REVIEW SHALL NOT RELIEVE THE CONTRACTOR COMPLYING WITH THE REQUIREMENTS OF THE DRAWINGS AND SPECIFICATIONS, AND THE CONTRACTOR SHALL BE RESPONSIBLE AT HIS OWN EXPENSE FOR ANY CHARGES RESULTING FROM HIS PROPOSED SUBSTITUTIONS WHICH AFFECT OTHER PARTS OF HIS OWN WORK, THE OWNER, ENGINEER OF RECORD, OR THE WORK OF OTHER CONTRACTORS.

10. COORDINATE ALL WORK WITH OTHER TRADES. OBTAIN ALL DRAWINGS THAT WILL REQUIRE COORDINATION AND PROVIDE ALL ELECTRICAL CONNECTIONS REQUIRED WHETHER SHOWN ON ELECTRICAL DRAWINGS OR NOT.

11. UNINTERRUPTED EXISTING ELECTRICAL POWER SHALL BE MAINTAINED TO OTHER TRADES FOR TEMPORARY POWER AREAS OF THE SITE DURING CONSTRUCTION. PROVIDE ANY TEMPORARY SERVICES AS MAY BE REQUIRED. IDENTIFY AT BID TIME.

12. ALL PENETRATIONS IN RATED WALLS (INDICATED IN ARCHITECTURAL LIFE SAFETY PLANS), ARE TO BE INSTALLED USING THE APPROPRIATE UL RATED PENETRATION ASSEMBLIES.

13. EQUIPMENT SHALL BE LISTED, LABELED OR CERTIFIED FOR ITS USE BY A NATIONALLY RECOGNIZED TESTING LABORATORY (NRTL) AS RECOGNIZED BY THE U.S. DEPARTMENT OF LABOR, OCCUPATIONAL SAFETY AN HEALTH ADMINISTRATION.

14. ALL ELECTRICAL EQUIPMENT CONNECTORS SHALL BE 75° RATED.

15. ALL ELECTRICAL COMPONENTS SHALL BE ANCHORED AND INSTALLED PER THE DETAILS ON THE DSA APPROVED CONSTRUCTION DOCUMENTS. WHERE NO DETAIL IS INDICATED, THE FOLLOWING COMPONENTS SHALL BE ANCHORED OR BRACED TO MEET THE FORCE AND DISPLACEMENT REQUIREMENTS PRESCRIBED IN THE 2022 CBC, SECTIONS 1616A.1.18 THROUGH 1616A.1.26 AND ASCE 7-10 CHAPTER 13, 26 AND 30.

    A. ALL PERMANENT EQUIPMENT AND COMPONENTS.
    B. TEMPORARY OR MOVABLE EQUIPMENT THAT IS PERMANENTLY ATTACHED (E.G. HARD WIRED) TO THE BUILDING UTILITY SERVICES SUCH AS ELECTRICITY, GAS OR WATER.
    C. MOVABLE EQUIPMENT WHICH IS STATIONED IN ONE PLACE FOR MORE THAN 8 HOURS AND HEAVIER THAN 400 POUNDS ARE REQUIRED TO BE ANCHORED WITH TEMPORARY ATTACHMENTS.

16. THE ATTACHMENT OF THE FOLLOWING ELECTRICAL COMPONENTS SHALL BE POSITIVELY ATTACHED TO THE STRUCTURE, BUT NEED NOT BE DETAILED ON THE PLANS. THESE COMPONENTS SHALL HAVE FLEXIBLE CONNECTIONS PROVIDED BETWEEN THE COMPONENT AND ASSOCIATED DUCTWORK, PIPING, AND CONDUIT.

    A. COMPONENTS WEIGHING LESS THAN 400 POUNDS AND HAVE A CENTER OF MASS LOCATED 4 FEET OR LESS ABOVE THE ADJACENT FLOOR OR ROOF LEVEL THAT DIRECTLY SUPPORT THE COMPONENT.
    B. COMPONENTS WEIGHING LESS THAN 20 POUNDS, OR IN THE CASE OF DISTRIBUTED SYSTEMS, LESS THAN 5 POUNDS PER FOOT, WHICH ARE SUSPENDED FROM A ROOF OR FLOOR OR HUNG FROM A WALL.

17. FOR THOSE ELEMENTS THAT DO NOT REQUIRE DETAILS ON THE APPROVED DRAWINGS, THE INSTALLATION SHALL BE SUBJECT TO THE APPROVAL OF THE STRUCTURAL ENGINEER OF RECORD AND THE DSA DISTRICT STRUCTURAL ENGINEER. THE PROJECT I NSPECTOR WILL VERIFY THAT ALL COMPONENTS AND EQUIPMENT HAVE BEEN ANCHORED IN ACCORDANCE WITH ABOVE REQUIREMENTS.

18. ELECTRICAL DISTRIBUTION SYSTEMS SHALL BE BRACED TO COMPLY WITH THE FORCES AND DISPLACEMENTS PRESCRIBED IN ASCE 7-10 SECTION 13.3 AS DEFINED IN ASCE 7-10 SECTION 13.6.8, 13.6.7, 13.6.5.6 AND 2022 CBC SECTIONS 1616A.1.23, 1616A.1.24, 1616A.1.25 AND 1616A.1.26

19. THE BRACING AND ATTACHMENTS TO THE STRUCTURE SHALL BE DETAILED ON THE APPROVED DRAWINGS OR THEY SHALL COMPLY WITH ONE OF THE OSHPD PRE-APPROVALS (OPA #) AS MODIFIED TO SATISFY ANCHORAGE REQUIREMENTS OF ACI 318, APPENDIX D.

20. COPIES OF THE MANUAL SHALL BE AVAILABLE ON THE JOBSITE PRIOR TO THE START OF HANGING AN BRACING OF THE PIPE, DUCTWORK AND ELECTRICAL DISTRIBUTION SYSTEMS.

21. THE STRUCTURAL ENGINEER OF RECORD SHALL VERIFY THE ADEQUACY OF THE STRUCTURE TO SUPPORT THE HANGER AND BRACE LOADS.

22. ELEC. TRADE SHALL CHECK AREA FOR EXISTING CONDUITS, SEWER, GAS & WATER PIPING BEFORE DRIVING GROUND RODS.

23. NON-CURRENT CARRYING METAL PARTS OF THE SYSTEM SHALL BE PROPERLY GROUNDED TO COMPLY WITH NEC REQUIREMENTS.

24. EACH BUILDING SHALL BE GROUNDED SEPARARELY WITH A ¾" ROUND X 8 FEET COPPERCLAD STEEL GROUND ROD. WHERE ROCK BOTOOM IS FOUND, DRIVE ROD AT 45 DEGREES MAXIMUM FROM THE VERTICAL OR HAVE IT BURIED IN A TRENCH 30" DEEP MINIMUM.

25. TESTING FOR RESISTANCE TO GROUND, IF RESISTANCE EXCEEDS 25 OHMS INSTALL ADDITIONAL GROUND RODS SEPARATED AT LEAST 6 FEET, UNTIL RESISTANCE REDUCES TO 25 OHMS OR LESS. GROUND TEST MUST BE DONE IN THE PRESENCE OF THE PROJECT INSPECTOR AND ALL GROUNDING SHALL BE IN ACCORDANCE WITH CEC ARTICLE 250

26. PROVIDE A GREEN WIRE GROUND CONDUCTOR IN ALL CONDUITS WITH POWER OR LIGHTING CONDUCTORS.

27. BOND SEPARATE CONDUCTORS FROM GROUND ROD TO ELEC'L. PANEL & TO METAL BUILDING FRAME (CEC 250.52) IN ADDITION TO THE DETAIL SHOWN ABOVE. BOND THE ELECTRICAL GROUND TO METAL UNDERGROUND WATER PIPE IN DIRECT CONTACT WITH THE EARTH FOR 10 FT. OR MORE, IF AVAILABLE (CEC 250.52)

28. CHECK RESISTANT TO GROUND ROD. IF RESISTANCE EXCEEDS 25 OHMS. INSTALL ADDITIONAL GROUND RODS WITH CONDUCTORS AS SHOWN SEPARATED AT LEAST 6'-0" UNTIL RESISTANCE IS REDUCED TO 25 OHMS OR LESS (CEC 250.56).

29. ALL MODULES OF STEEL FRAME BLDGS. SHALL BE ELECTRICALLY BONDED TOGETHER (BOLTING ONLY IS NOT ACCEPTABLE BONDING). BONDING SHALL INCLUDE METAL RAMP & STAIRS.

30. SIZE OF CONDUCTORS SHALL COMPLY WITH CEC TABLE 250.66

31. PER CEC210.8(B) ALL RECEPTACLES AT THE FOLLOWING LOCATIONS SHALL HAVE GROUND-FAULT CIRCUIT INTERRUPTER (GFCI) - (1) BATHROOMS, (2) KITCHENS, (3) SINKS (WITHIN 6 FT), (4) INDOOR WET AREAS, (5) LOCKER ROOMS, (6) GARAGE, SERVICE BAYS OR SIMILAR, (7) ROOFTOPS, (8) OUTDOORS.

32. IF CLOSED BY GWB INSTALL ONE ATTIC HEAT DETECTOR PER MODULE: WHEN STANDARD OPEN WEB TRUSS SYSTEM IS USED ADDITIONAL ATTIC HEAT DETECTORS ARE NOT REQUIRED.

9 ELECTRICAL GENERAL NOTES

PROJECT SPECIFIC STATE AGENCY APPROVAL

IDENTIFICATION STAMP
DIV. OF THE STATE ARCHITECT
APP: 02-123433 INC:
REVIEWED FOR
SS ☑ FLS ☑ ACS ☑
DATE: 01/20/2026

R&S TAVARES ASSOCIATES
DESIGN ◆ CONSULTING ◆ PROJECT MGT
11590 W. BERNARDO COURT, SUITE 100
SAN DIEGO, CA 92127
PHONE: (858) 444-3344
WWW.RSTAVARES.COM

PROFESSIONAL STAMP

REGISTERED PROFESSIONAL ENGINEER — MANNY D. FRANCISCO — No. 13380 — Exp. 03/31/24 — ELECTRICAL — STATE OF CALIFORNIA

RST#22088

02/16/24

THE PLANS, IDEAS & DESIGNS SHOWN ON THESE DRAWINGS ARE THE PROPERTY OF R&S TAVARES ASSOCIATES, INC. DEVISED SOLELY FOR THIS CONTRACT. THESE PLANS SHALL NOT BE USED, IN WHOLE OR IN PART, FOR ANY PURPOSE FOR WHICH THEY WERE NOT INTENDED WITHOUT THE EXPRESS WRITTEN CONSENT OF R&S TAVARES ASSOCIATES, INC. ©

CLIENT

1651Juanita Street, San Jacinto, CA 92583
Voice (951) 943-1908 Fax (951)943-5768

ORIGINAL PC STATE AGENCY APPROVAL

APPROVED
DIV. OF THE STATE ARCHITECT
APP: 04-123059 PC
REVIEWED FOR
SS ☑ FLS ☑ ACS ☑ CG ☑
DATE: 02/20/2024

Revision Schedule

#	Description	Date

PROJECT TITLE

PC 2022 CBC: 24' x 40' EXPANDABLE TO 120' x 40'

SHEET TITLE

ELECTRICAL GENERAL NOTES

PROJECT NUMBER 22088

DRAWN BY AM

CHECKED BY RT

DATE

SHEET NO. E0.1

SHEET OF

6/15/2021 11:52:03 PM C:\Users\User\Documents\20093 - Aries, 24x40 PC - MainFile - Low Seismic_6_7_CES4R24D63.rvt

SYMBOL

SOLAR TUBE DIFFUSER

TUBE SIZE=21"(630mm)
LIGHT COVERAGE AREA=250-300ft² (23-28m)

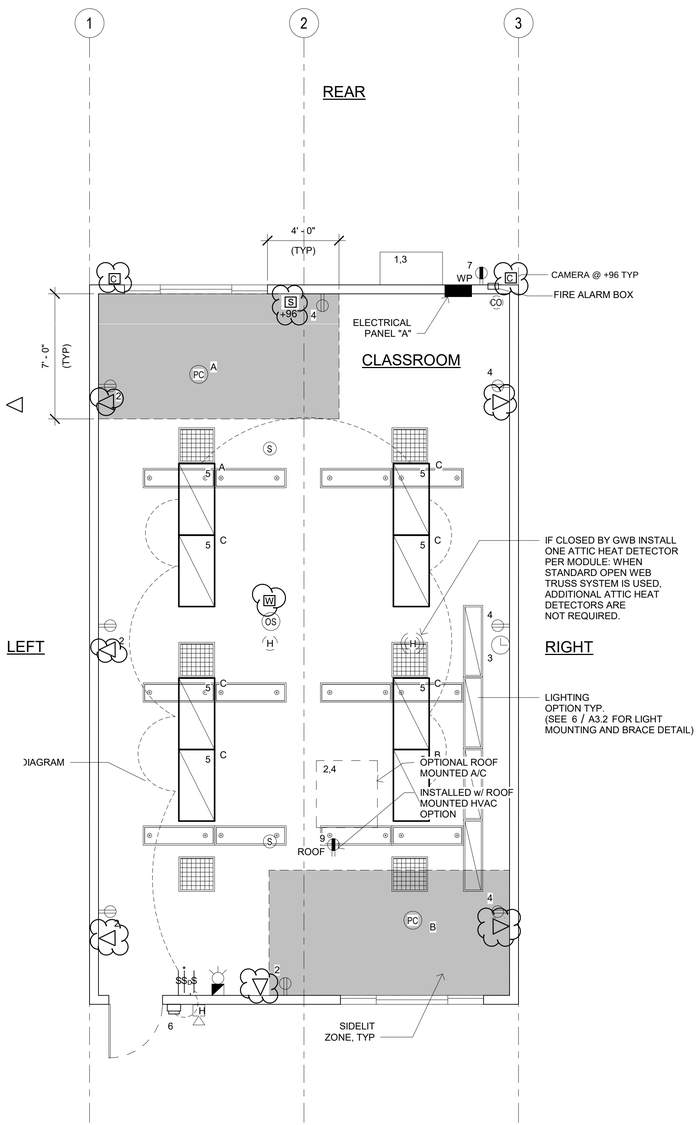

NOTE: PROVIDE A MINIMUM OF 72 SF SOLAR READY AREA PER MODULE. AREA TO BE A MINIMUM OF 5' IN ANY DIRECTION WITH A MINIMUM SPACE OF 80 SF PER BUILDING.

1 *1/4" = 1'-0"*
ELECTRICAL PLAN

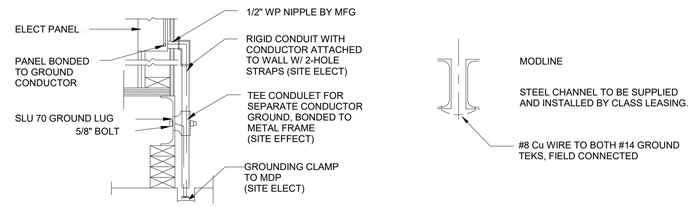

NOTES:

1. BOND SEPARATE CONDUCTORS FROM GROUND ROD TO ELEC'L. PANEL & TO METAL BUILDING FRAME (CEC 250.52) IN ADDITION TO THE DETAIL SHOWN ABOVE. BOND THE ELECTRICAL GROUND TO METAL UNDERGROUND WATER PIPE IN DIRECT CONTACT WITH THE EARTH FOR 10 FT. OR MORE, IF AVAILABLE (CEC 250.52)

2. CHECK RESISTANT TO GROUND ROD. IF RESISTANCE EXCEEDS 25 OHMS. INSTALL ADDITIONAL GROUND RODS WITH CONDUCTORS AS SHOWN SEPARATED AT LEAST 6'-0" UNTIL RESISTANCE IS REDUCED TO 25 OHMS OR LESS (CEC 250.56).

3. ELEC. TRADE SHALL CHECK AREA FOR EXISTING CONDUITS, SEWER, GAS & WATER PIPING BEFORE DRIVING GROUND RODS.

4. ALL MODULES OF STEEL FRAME BLDGS. SHALL BE ELECTRICALLY BONDED TOGETHER (BOLTING ONLY IS NOT ACCEPTABLE BONDING). BONDING SHALL INCLUDE METAL RAMP & STAIRS.

5. SIZE OF CONDUCTORS SHALL COMPLY WITH CEC TABLE 250.66

2 *1 1/2" = 1'-0"*
TYPICAL GROUNDING DETAIL

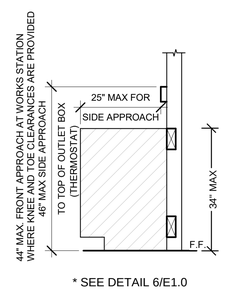

* SEE DETAIL 6/E1.0

3 *1" = 1'-0"*
ELEV. @ WORKSTATION

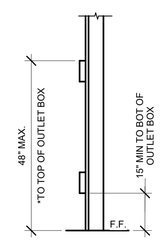

* 30"x48" MIN CLR FLOOR SPACE
AT EACH LOCATION FOR
PERPENDICULAR APPROACH

4 *1" = 1'-0"*
MOUTING ELEV.

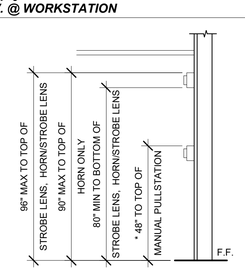

5 *1" = 1'-0"*
FIRE ALARM MOUNTING HEIGHTS

* PROVIDE MIN 30"x48" CLR
FLOOR SPACE FOR
PERPENDICULAR APPROACH
AT EACH LOCATION

THE SWITCH OR SWITCHES INSTALLED IN EMERGENCY LIGHTING CIRCUITS SHALL BE SO ARRANGED THAT ONLY AUTHORIZED PERSONNEL WILL HAVE CONTROL OF EMERGENCY LIGHTING. (CEC art. 700.20)

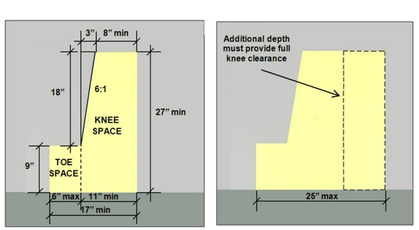

6 **TOE SPACE CLEARANCE**

Figure 308.2.2 Obstructed High Forward Reach

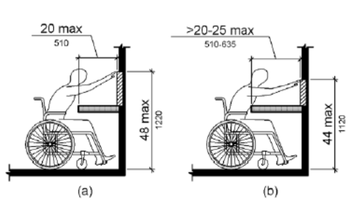

GENERAL GROUNDING NOTES

EACH BUILDING SHALL BE GROUNDED SEPARARELY WITH A ¾" ROUND X 8 FEET COPPERCLAD STEEL GROUND ROD. WHERE ROCK BOTOOM IS FOUND, DRIVE ROD AT 45 DEGREES MAXIMUM FROM THE VERTICAL OR HAVE IT BURIED IN A TRENCH 30" DEEP MINIMUM.

TESTING FOR RESISTANCE TO GROUND, IF RESISTANCE EXCEEDS 25 OHMS INSTALL ADDITIONAL GROUND RODS SEPARATED AT LEAST 6 FEET, UNTIL RESISTANCE REDUCES TO 25 OHMS OR LESS. GROUND TEST MUST BE DONE IN THE PRESENCE OF THE PROJECT INSPECTOR AND ALL GROUNDING SHALL BE IN ACCORDANCE WITH CEC ARTICLE 250

MEP COMPONENT ANCHORAGE NOTE

ALL MECHANICAL, PLUMBING, AND ELECTRICAL COMPONENTS SHALL BE ANCHORED AND INSTALLED PER THE DETAILS ON THE DSA-APPROVED CONSTRUCTION DOCUMENTS. THE FOLLOWING COMPONENTS SHALL BE ANCHORED OR BRACED TO MEET THE FORCE AND DISPLACEMENT REQUIREMENTS PRESCRIBED IN THE 2022 CBC SECTIONS 1617A.1.18 THROUGH 1617A.1.26 AND ASCE 7-16 CHAPTERS 13, 26, AND 30:

1. ALL PERMANENT EQUIPMENT AND COMPONENTS.
2. TEMPORARY, MOVABLE OR MOBILE EQUIPMENT THAT IS PERMANENTLY ATTACHED (E.G., HARD WIRED) TO THE BUILDING UTILITY SERVICES SUCH AS ELECTRICITY, GAS OR WATER. "PERMANENTLY ATTACHED" SHALL INCLUDE ALL ELECTRICAL CONNECTIONS EXCEPT PLUGS FOR 110/220 VOLT RECEPTACLES HAVING A FLEXIBLE CABLE. TEMPORARY, MOVABLE OR MOBILE EQUIPMENT WHICH IS HEAVIER THAN
3. 400 POUNDS OR HAS A CENTER OF MASS LOCATED 4 FEET OR MORE ABOVE THE ADJACENT FLOOR OR ROOF LEVEL THAT DIRECTLY SUPPORT THE COMPONENT IS REQUIRED TO BE RESTRAINED IN A MANNER APPROVED BY DSA.

THE FOLLOWING MECHANICAL AND ELECTRICAL COMPONENTS SHALL BE POSITIVELY ATTACHED TO THE STRUCTURE BUT NEED NOT DEMONSTRATE DESIGN COMPLIANCE WITH THE REFERENCES NOTED ABOVE. THESE COMPONENTS SHALL HAVE FLEXIBLE CONNECTIONS PROVIDED BETWEEN THE COMPONENT AND ASSOCIATED DUCTWORK, PIPING, AND CONDUIT. FLEXIBLE CONNECTIONS MUST ALLOW MOVEMENT IN BOTH TRANSVERSE AND LONGITUDINAL DIRECTIONS:

A. COMPONENTS WEIGHING LESS THAN 400 POUNDS AND HAVING A CENTER OF MASS LOCATED 4 FEET OR LESS ABOVE THE ADJACENT FLOOR OR ROOF LEVEL THAT DIRECTLY SUPPORT THE COMPONENT.
B. COMPONENTS WEIGHING LESS THAN 20 POUNDS, OR IN THE CASE OF DISTRIBUTED SYSTEMS, LESS THAN 5 POUNDS PER FOOT, WHICH ARE SUSPENDED FROM A ROOF OR FLOOR OR HUNG FROM A WALL.

THE ANCHORAGE OF ALL MECHANICAL, ELECTRICAL AND PLUMBING COMPONENTS SHALL BE SUBJECT TO THE APPROVAL OF THE DESIGN PROFESSIONAL IN GENERAL RESPONSIBLE CHARGE OR STRUCTURAL ENGINEER DELEGATED RESPONSIBILITY AND ACCEPTANCE BY DSA. THE PROJECT INSPECTOR WILL VERIFY THAT ALL COMPONENTS AND EQUIPMENT HAVE BEEN ANCHORED IN ACCORDANCE WITH THE ABOVE REQUIREMENTS.

PIPING, DUCTWORK, AND ELECTRICAL DISTRIBUTION SYSTEM BRACING NOTE

PIPING, DUCTWORK, AND ELECTRICAL DISTRIBUTION SYSTEMS SHALL BE BRACED TO COMPLY WITH THE FORCES AND DISPLACEMENTS PRESCRIBED IN ASCE 7-16 SECTION 13.3 AS DEFINED IN ASCE 7-16 SECTIONS 13.6.5, 13.6.6, 13.6.7, 13.6.8; AND 2022 CBC, SECTIONS 1617A.1.24, 1617A.1.25 AND 1617A.1.26.

THE METHOD OF SHOWING BRACING AND ATTACHMENTS TO THE STRUCTURE FOR THE IDENTIFIED DISTRIBUTION SYSTEM ARE AS NOTED BELOW. WHEN BRACING AND ATTACHMENTS ARE BASED ON A PREAPPROVED INSTALLATION GUIDE (E.G., HCAI OPM FOR 2013 CBC OR LATER), COPIES OF THE BRACING SYSTEM INSTALLATION GUIDE OR MANUAL SHALL BE AVAILABLE ON THE JOBSITE PRIOR TO THE START OF AND DURING THE HANGING AND BRACING OF THE DISTRIBUTION SYSTEMS. THE STRUCTURAL ENGINEER OF RECORD SHALL VERIFY THE ADEQUACY OF THE STRUCTURE TO SUPPORT THE HANGER AND BRACE LOADS.

MECHANICAL PIPING (MP), MECHANICAL DUCTS (MD), PLUMBING PIPING (PP), ELECTRICAL DISTRIBUTION SYSTEMS (E):

MP☐ MD☐ PP☐ E☒ OPTION 1: DETAILED ON THE APPROVED DRAWINGS WITH PROJECT SPECIFIC NOTES AND DETAILS.

MP☐ MD☐ PP☐ E☐ OPTION 2: SHALL COMPLY WITH HCAI PREAPPROVAL (OPM #) #_____.

FIRE ALARM NOTES

PROVIDE SPACE ON ELECTRICAL PANEL FOR LOCK-ON BREAKER, IDENTIFIED WITH RED MARKING, FOR 120 VOLTS FIRE ALARM CIRCUIT, WITH BREAKER LABELED AS FIRE ALARM CIRCUIT, CEC 760.41 (B).
BREAKER AND CIRCUIT PROVIDED AND INSTALLED ON SITE BY OTHERS.

SMOKE AND HEAT DETECTOR CONDUIT AND DEVICES TO BE PROVIDED AND INTERCONNECTED TO THE FIRE ALARM SYSTEMS ON SITE BY OTHERS

APPROVAL OF THIS PLAN DOES NOT CONSTITUTE APPROVAL OF THIS FIRE ALARM SYSTEM FOR ALL SITES, THE FIRE ALARM SYSTEM AND COMPONENTS MAYBE REQUIRED TO BE CHANGED DUE TO EXISTING CONDITIONS OR INCOMPATIBLE COMPONENTS.

CONDUIT FILL AND CONDUCTOR CAPACITY TABLE

(ALL CONDUCTORS SHALL BE TYPE THHN/THWN 75 DEG. C. COPPER)

WIRE SIZE	CAPACITY	WIRE TYPE	NO. OF CONDUCTOR 1/2" C	3/4" C	1" C	1 1/4" C
#12	20A	THHN	9	16	25	45
#10	30A	THHN	5	10	16	28
#8	45A	THHN	2	5	8	14
#6	65A	THHN	1	3	5	10
#4	85A	THHN	1	2	4	7

JUNCTION BOX SIZE TABLE

BOX	SIZE	CU. IN.	MAX NO. OF CONDUCTORS #12	#10	#8	#6
4SS	1 1/4"x4" SQ	18.0	8	7	6	0
4S	1 1/2"x4" SQ	21.0	9	8	7	0
4SD	2 1/8"x4" SQ	30.3	13	12	10	6
4SX	2 7/8"x4" SQ	43.5	23	21	17	10
5SD	2 1/8"x4-11/16" SQ	42.0	18	16	14	6
5SX	3 7/8"x4-11/16" SQ	86.0	38	34	28	17
664	4"x6" SQ	144.0	64	57	48	28

* DEDUCT ONE CONDUCTOR FOR (1) OR MORE GROUNDING CONDUCTORS ENTERING THE BOX

PROJECT SPECIFIC STATE AGENCY APPROVAL

IDENTIFICATION STAMP
DIV. OF THE STATE ARCHITECT
APP: 02-123433 INC:
REVIEWED FOR
SS ☑ FLS ☑ ACS ☑
DATE: 01/20/2026

R&S TAVARES ASSOCIATES
DESIGN ♦ CONSULTING ♦ PROJECT MGT
11590 W BERNARDO COURT, SUITE 100
SAN DIEGO, CA 92127
WWW.RSTAVARES.COM

PROFESSIONAL STAMP

REGISTERED PROFESSIONAL ENGINEER
MANNY D. FRANCISCO
No. 63380
Exp. 03/31/24
STRUCTURAL
STATE OF CALIFORNIA
RST#22088
02/16/24

THE PLANS, IDEAS & DESIGNS SHOWN ON THESE DRAWINGS ARE THE PROPERTY OF R&S TAVARES ASSOCIATES, INC. DEVISED SOLELY FOR THIS CONTRACT. THESE PLANS SHALL NOT BE USED, IN WHOLE OR IN PART, FOR ANY PURPOSE FOR WHICH THEY WERE NOT INTENDED WITHOUT THE EXPRESS WRITTEN CONSENT OF R&S TAVARES ASSOCIATES, INC. ©

CLIENT

Class Leasing
1651Juanita Street, San Jacinto, CA 92583
Voice (951) 943-1908 Fax (951)943-5768

ORIGINAL PC STATE AGENCY APPROVAL

APPROVED
DIV. OF THE STATE ARCHITECT
APP: 04-123059 PC
REVIEWED FOR
SS ☑ FLS ☑ ACS ☑ CG ☑
DATE: 02/20/2024

Revision Schedule

#	Description	Date

PRE-CHECK (PC) DOCUMENT

Code: 2022 CBC

A separate project application for construction is required

PROJECT TITLE
PC 2022 CBC: 24' x 40' EXPANDABLE TO 120' x 40'

SHEET TITLE
ELECTRICAL PLAN 24x40

PROJECT NUMBER
22088

DRAWN BY
rMc/SC

CHECKED BY
RH/RT

DATE

SHEET NO.
E1.0

SHEET OF

6/15/2021 11:52:06 PM C:\Users\User\Documents\20093 - Aries, 24x40 PC - MainFile - Low Seismic_6.7_CESAR24D63.rvt

PANEL A 24" x40"	120/208 VOLTS, 1ϕ, 3 WIRE				MAIN LUGS ONLY			PANEL BOX= 100A		
	LOADCENTER	RECESSED						GRD & NEUTRAL BARS		AMP BUS
	VOLTAMPS		10000 AIC					VOLTAMPS		
DESCRIPTION	ϕ A	ϕ B	C/B	CKT	ϕ	CKT	C/B	ϕA	ϕ B	DESCRIPTION
AC WALL MOUNTED	6670		30	1	A	2	20	720		OUTLETS
		6670	30	3	B	4	20		720	OUTLETS
GENERAL LIGHTING	720		20	5	A	6	20	40		EXTERIOR LIGHT
EXTERIOR GFI/WP		180	20	7	B	8	20			
			20	9	A	10	20	40		FIRE ALARM
DED SOLAR READY										
DED SOLAR READY										
SUBTOTAL	ϕ A 7390	ϕ B 6850						ϕA 800	ϕ B 720	SUBTOTAL
TOTAL	8190	7570	8190 /120 VOLTS= 68.25 76.25 AMPS + .94= 77.19 AMPS							

1 *1" = 1'-0"*
ELECTRICAL PANEL_WALL MOUNTED

PANEL A 24" x40"	120/208 VOLTS, 1 ϕ, 3 WIRE				MAIN LUGS ONLY			PANEL BOX= 100A		
	LOADCENTER	RECESSED						GRD & NEUTRAL BARS		AMP BUS
	VOLTAMPS		10000 AIC					VOLTAMPS		
DESCRIPTION	ϕ A	ϕ B	C/B	CKT	ϕ	CKT	C/B	ϕA	ϕ B	DESCRIPTION
AC Roof Mounted	7360		30	1	A	2	20	720		OUTLETS
		7360	30	3	B	4	20		720	OUTLETS
GENERAL LIGHTING	720		20	5	A	6	20	40		EXTERIOR LIGHT
EXTERIOR GFI/WP		180	20	7	B	8	20			
			20	9	A	10	20	40		FIRE ALARM
DED SOLAR READY										
DED SOLAR READY										
SUBTOTAL	ϕ A 8080	ϕ B 7540						ϕA 800	ϕ B 720	SUBTOTAL
TOTAL	8880	8260	8880 /120 VOLTS= 74 74 AMPS + 18.5= 92.5 AMPS							

2 *1" = 1'-0"*
ELECTRICAL PANEL_ROOF MOUNTED

LEGEND

ELECTRICAL PANEL AT +60" AFF TO TOP OF ELECTRICAL PANEL WITH 1 1/2" DIA POWER STUB OUT

ROOF MOUNTED HVAC UNIT-SEE MECHANICAL DWGS

WALL MOUNTED HVAC UNIT, SEE MECHANICAL DWGS

100 CFM CEILING MOUNTED EXHAUST FAN. INTERLOCKED WITH LIGHT SWITCH

WH — 4SD J-BOX FOR WATER HEATER LOCATE ABOVE CEILING W/ COVER PLATE, HARD WIRE TO UNIT

H — 4SD J-BOX IN ATTIC FOR ATTIC MOUNTED HEAT DETECTOR (DEVICE BY OTHERS). MAXIMUM 35'-0" FROM ANY POINT IN ATTIC BUT NOT MORE THAN 25'-0" FROM TWO PERPENDICULAR WALL AND 50'-0" BETWEEN THEM. PROVIDE A 6'-0" CONDUIT FROM EACH J-BOX TO HEAT DETECTOR LOCATION. CONDUIT & CONNECTION TO CEILING DEVICE & DEVICE BY OTHERS (ALARM NOTE #1)

S — 4SD J-BOX IN ATTIC FOR CEILING MOUNTED SMOKE DETECTOR (DEVICE BY OTHERS). MAXIMUM 21'-0" FROM ANY POINT IN ROOM BUT NOT MORE THAN 15'-0" TO A PERPENDICULAR WALL AND 30'-0" BETWEEN THEM. PROVIDE A 6'-0" CONDUIT FROM EACH J-BOX TO SMOKE DETECTOR LOCATION. CONDUIT & CONNECTION TO CEILING DEVICE & DEVICE BY OTHERS (ALARM NOTE #1)

RECESSED 4SD J-BOX W/ COVER PLATE FOR FUTURE FIRE ALARM SYSTEM BY OTHERS. MOUNT AT +18" AFF U.O.N. TO CENTERLINE OF BOX AND PROVIDE 1" CO STUB TO ATTIC SPACE WITH PULLSTRING

H — 4SD J-BOX FOR EXTERIOR FIRE ALARM HORN (DEVICE BY OTHERS). MOUNT AT +90" AFF TO TOP OF DEVICE WITH 3/4" CONDUIT STUBBED TO ATTIC WITH PULLSTRING

4SD J-BOX/SINGLE GANG MUD RING FOR FIRE ALARM STROBE (DEVICE BY OTHERS). BOTTOM OF LENS 80" MIN TOP OF LENS 96" MAX AFF WITH 3/4"CONDUIT TO EXTERIOR FIRE ALARM HORN WITH PULLSTRING

4SD J-BOX/ SINGLE GANG MUD RING FOR FIRE ALARM PULL STATION (DEVICE BY OTHERS). MOUNT AT +48" AFF TO TOP OF CONTROL BOX WITH 3/4" CONDUIT TO FIRE ALARM STROBE WITH PULLSTRING

EXIT — EXIT SIGN WITH BATTERY BACK UP. EXIT SIGN REQUIRED FOR CLASSROOMS WITH TWO OR MORE EXTERIOR DOORS. FLS 90' BACK UP. CLASSROOMS WITH ONE EXTERIOR DOOR-OPTIONAL.

CLOCK OUTLET AT +90" AFF TO CENTERLINE OF DEVICE

EXTERIOR LED LIGHT FIXTURE. 30w MAX WITH PHOTOCELL MOUNT AT +93" AFF

ROOF — ROOF MOUNTED WEATHER PROOF GFI RECEPTACLE

GFI — GROUND FAULT CIRCUIT INTERRUPT RECEPTACLE WITHIN 6'-0" OF ALL SINKS

WP — EXTERIOR WEATHER PROOF GFI RECEPTACLE AT +24" AFF FOR A/C SERVICES (MAX 25'-0" FROM UNITS)

DUPLEX (WALL MOUNTED) RECEPTACLE 15A-125V-3 WIRE. MOUNT AT +15" AFF U.O.N. TO BOTTOM OF OUTLET BOX

MIN. + 15" TO BOTTOM OF BOX

3-WAY LIGHT SWITCH. MOUNT AT+48" AFF TO TOP OF SWITCH BOX

$ 3

$ — LIGHT SWITCH. MOUNT AT+48" AFF TO TOP OF SWTICH BOX

$ D — SINGLE BUTTON DIMMER SWITCH, AT +48" AFF, TO TOP OF SWITCH BOX, WATTSTOPPER #LMDM-101 OR EQUAL

WS-1 — SINGLE SWITCH WALL OCCUPANCY SENSOR. WATTSTOPPER PW-100 OR EQUAL. SENSOR TO BE MOUNTED AT +44" AFF AND USE FOR OPEN ROOM (OR RESTROOM) LESS THAN 100 SQ FT W/ (1) CIRCUIT.

US — ULTRASONIC CEILING OCCUPANCY SENSOR. WATTSTOPPER W-500A OR EQUAL. SENSOR TO BE CONNECTED TO KEYED LIGHT SWITCHES FOR MANUAL OVERRIDE AND USE FOR RESTROOM W/ PARTITIONS.

PC — CEILING MOUNTED PHOTOCELL, WATTSTOPPER #LMLS-500 OR EQUAL

OS — CEILING MOUNTED OCCUPANCY SENSOR. WATTSTOPPER #LMPC-100 OR EQUAL.

2x4 CEILING LIGHT WITH (3) LED PANELIGHT, LAY-IN LIGHT FIXTURE WITH DIMMABLE BALLAST DIMI LIGHTING-MODEL DM-P72448W-40K-ZZ WATTAGE: 48W (48" LG) OR EQUAL

2x4 CEILING LIGHT WITH (3) LED PANELIGHT, LAY-IN LIGHT FIXTURE WITH DIMMABLE BALLAST DIMI LIGHTING-MODEL DM-P72448W-40K-ZZ WATTAGE: 48W (48" LG) OR EQUAL EACH LIGHT FIXTURE WHICH IS INDICATED AS BEING AN EMERGENCY LIGHT SHALL HAVE A BALLAST BATTERY PACK INSTALLED ON THE FIXTURE. THE BATTERY PACK SHALL PROVIDE POWER TO A SINGLE LAMP WITHIN THE FIXTURE FOR NO LESS THAN 90 MINUTES. ANY LIGHT FIXTURE Equipped WITH A BATTERY PACK SHALL BE WIRED IN SUCH A MANNER THAT THE BATTERY WILL BE ACTIVATED IMMEDIATELY UPON LOSS OF POWER TO THE FIXTURE. ADDITIONALLY THE BATTERY PACK SHALL BE OPERATED USING BATTERY POWER LIGHTING CONTROL SWITCHES AND SENSORS SHALL NOT BE ABLE TO SHUT THE FIXTURE OFF.

NOTE: SEE 4/A3.2 FOR PHOTOMETRIC DATA

3 *1" = 1'-0"*
LEGEND

PROJECT SPECIFIC STATE AGENCY APPROVAL

IDENTIFICATION STAMP
DIV. OF THE STATE ARCHITECT
APP: 02-123433 INC:
REVIEWED FOR
SS ☑ FLS ☑ ACS ☑
DATE: 01/20/2026

R&S TAVARES ASSOCIATES
DESIGN ◆ CONSULTING ◆ PROJECT MGT
11590 W BERNARDO COURT, SUITE 100
SAN DIEGO, CA 92127
WWW.RSTAVARES.COM

PROFESSIONAL STAMP

REGISTERED PROFESSIONAL ENGINEER — JANNY D. FRANCISCO — C 63380 — 03/31/24 — STRUCTURAL — STATE OF CALIFORNIA

RST#22088

02/16/24

THE PLANS, IDEAS & DESIGNS SHOWN ON THESE DRAWINGS ARE THE PROPERTY OF R&S TAVARES ASSOCIATES, INC. DEVISED SOLELY FOR THIS CONTRACT. THESE PLANS SHALL NOT BE USED, IN WHOLE OR IN PART, FOR ANY PURPOSE FOR WHICH THEY WERE NOT INTENDED WITHOUT THE EXPRESS WRITTEN CONSENT OF R&S TAVARES ASSOCIATES, INC. ©

CLIENT

Class Leasing
1651Juanita Street, San Jacinto, CA 92583
Voice (951) 943-1908 Fax (951)943-5768

ORIGINAL PC STATE AGENCY APPROVAL

APPROVED
DIV. OF THE STATE ARCHITECT
APP: 04-123059 PC
REVIEWED FOR
SS ☑ FLS ☑ ACS ☑ CG ☑
DATE: 02/20/2024

Revision Schedule

#	Description	Date

PRE-CHECK (PC) DOCUMENT

Code: 2022 CBC

A separate project application for construction is required

PROJECT TITLE

PC 2022 CBC: 24' x 40' EXPANDABLE TO 120' x 40'

SHEET TITLE

ELECTRICAL SCHEDULES 24x40

PROJECT NUMBER: 22088

DRAWN BY: rMc/SC

CHECKED BY: RH/RT

DATE

SHEET NO.

E1.1

SHEET OF

6/15/2021 11:52:08 PM C:\Users\User\Documents\20093 - Aries, 24x40 PC - MainFile - Low Seismic_6_7_CESAR24D63.rvt

ABB.	DESCRIPTION	SYMBOL
WM	WALL MOUNTED UNIT (SEE SCHEDULE THIS SHEET)	WM-1
RM	ROOF MOUNTED UNIT (SEE SCHEDULE THIS SHEET)	RM-1
P.O.C	POINT OF CONNECTION	P.O.C
CO	CARBON MONOXIDE SENSOR	CO
BT	BYPASS TIMER	BT
STAT	THERMOSTAT	T
UC	UNDERCUT DOOR	UC
MVD	MANUAL VOLUME DAMPER	
FD	FIRE DAMPER	
VTR	VENT THRU ROOF	
ER	EXHAUST CEILING REGISTER	
CR	RETURN CEILING REGISTER	
CD	SUPPLY CEILING DIFFUSER	
(L)	LINED DUCTWORK	
EAD	EXHAUST AIR DUCT	
RAD	RETURN AIR DUCT	
SAD	SUPPLY AIR DUCT	
EF	EXHAUST FAN	EF -
CO2	CARBON DIOXIDE SENSOR	CO2

1 ***1" = 1'-0"***
LEGEND

CEILING MOUNTED EXHAUST FAN

SYM.	USE	MFR/MODEL	CFM	SOUND LEVEL	SP	VOLTS	Ø	POWER	WGT#	NOTES
EF A	BATHROOM EXHAUST	★BROAN L100	109	1.0 SONES	0.25	120	1	87 WATTS	22.80#	WITH BROAN ROOF CAP #634. PROVIDE 6" DIA. EXHAUST DUCT UP TO ROOF. INTERLOCK WITH LIGHT SWITCH.
EF B	BATHROOM EXHAUST	★BROAN L200	210	2.0 SONES	0.25	120	1	127 WATTS	23#	WITH BROAN ROOF CAP #634. PROVIDE 8" DIA. EXHAUST DUCT UP TO ROOF. INTERLOCK WITH LIGHT SWITCH.
EF C	BATHROOM EXHAUST	★BROAN L300	308	2.8 SONES	0.25	120	1	212 WATTS	23.10#	WITH BROAN ROOF CAP #634. PROVIDE 8" DIA. EXHAUST DUCT UP TO ROOF. INTERLOCK WITH LIGHT SWITCH.
EF D	BATHROOM EXHAUST	★BROAN 676	100	4.0 SONES	0.25	120	1	156 WATTS	7#	WITH BROAN ROOF CAP #636. PROVIDE 4" DIA. EXHAUST DUCT UP TO ROOF. INTERLOCK WITH LIGHT SWITCH.

★OR APPROVED EQUAL.

2 ***1" = 1'-0"***
CEILING MOUNTED EXHAUST FAN SCHEDULE

PERFORATED FACE GRILLE SCHEDULE (SUPPLY)

	NECK SIZE	CFM (RANGE)	NOTES
16x16-4W	6"Ø	0-150	SEE DETAIL FOR MAKE AND MODEL
	8"Ø	150-230	SEE DETAIL FOR MAKE AND MODEL
	10"Ø	230-350	SEE DETAIL FOR MAKE AND MODEL
	12"Ø	350-460	SEE DETAIL FOR MAKE AND MODEL
	14"Ø	460-640	SEE DETAIL FOR MAKE AND MODEL

T-BAR SUPPLY

Fixed Curve Blade, 4-way throw
(WITH INTEGRAL DAMPER)

3 ***1" = 1'-0"***
PFG SCHED (SUPPLY)

PERFORATED FACE GRILLE SCHEDULE (RETURN)

	NECK SIZE	CFM (RANGE)	NOTES
	6"Ø	0-230	SEE MECH CLG PLAN FOR SIZE
	10"Ø	230-460	SEE MECH CLG PLAN FOR SIZE
	12"Ø	350-460	SEE MECH CLG PLAN FOR SIZE
	14"Ø	460-710	SEE MECH CLG PLAN FOR SIZE
	16"Ø	277-1664	SEE MECH CLG PLAN FOR SIZE

T-BAR RETURN

Perforated Face

Shoemaker 105P with 24 ga. 45 deg.

TESTS TO BE COMPLETED ON NEWLY INSTALLED OR REPLACEMENT OF MECHANICAL SYSTEMS BEFORE PROJECT COMPLETION PER THE CALIFORNIA ENERGY CODE SECTION 10-103. ACCEPTANCE TESTS MUST BE PERFORMED BY A CERTITIED ACCEPTANCE TEST TECHNICIAN(ATT). THE ACCEPTANCE TESTING PROCEDURES MUST BE REPEATED, AND DEFICIENCIES CORRECTED UNTIL THE INSTALLATION OF THE SPECIFIED SYSTEMS CONFORM AND PASS THE REQUIRED ACCEPTANCE CRITERIA. COMPLETED NRCA FORMS SHALL BE SUBMITTED TO THE PROJECT INSPECTOR AND THE DISTRICT.

4 ***1" = 1'-0"***
PFG SCHED (RETURN)

MEP COMPONENT ANCHORAGE NOTE

ALL MECHANICAL, PLUMBING, AND ELECTRICAL COMPONENTS SHALL BE ANCHORED AND INSTALLED PER THE DETAILS ON THE DSA-APPROVED CONSTRUCTION DOCUMENTS. THE FOLLOWING COMPONENTS SHALL BE ANCHORED OR BRACED TO MEET THE FORCE AND DISPLACEMENT REQUIREMENTS PRESCRIBED IN THE 2022 CBC SECTIONS 1617A.1.18 THROUGH 1617A.1.26 AND ASCE 7-16 CHAPTERS 13, 26, AND 30:

1. ALL PERMANENT EQUIPMENT AND COMPONENTS.
2. TEMPORARY, MOVABLE OR MOBILE EQUIPMENT THAT IS PERMANENTLY ATTACHED (E.G., HARD WIRED) TO THE BUILDING UTILITY SERVICES SUCH AS ELECTRICITY, GAS OR WATER. "PERMANENTLY ATTACHED" SHALL INCLUDE ALL ELECTRICAL CONNECTIONS EXCEPT PLUGS FOR 110/220 VOLT RECEPTACLES HAVING A FLEXIBLE CABLE. TEMPORARY, MOVABLE OR MOBILE EQUIPMENT WHICH IS HEAVIER THAN
3. 400 POUNDS OR HAS A CENTER OF MASS LOCATED 4 FEET OR MORE ABOVE THE ADJACENT FLOOR OR ROOF LEVEL THAT DIRECTLY SUPPORT THE COMPONENT IS REQUIRED TO BE RESTRAINED IN A MANNER APPROVED BY DSA.

THE FOLLOWING MECHANICAL AND ELECTRICAL COMPONENTS SHALL BE POSITIVELY ATTACHED TO THE STRUCTURE BUT NEED NOT DEMONSTRATE DESIGN COMPLIANCE WITH THE REFERENCES NOTED ABOVE. THESE COMPONENTS SHALL HAVE FLEXIBLE CONNECTIONS PROVIDED BETWEEN THE COMPONENT AND ASSOCIATED DUCTWORK, PIPING, AND CONDUIT. FLEXIBLE CONNECTIONS MUST ALLOW MOVEMENT IN BOTH TRANSVERSE AND LONGITUDINAL DIRECTIONS:

A. COMPONENTS WEIGHING LESS THAN 400 POUNDS AND HAVING A CENTER OF MASS LOCATED 4 FEET OR LESS ABOVE THE ADJACENT FLOOR OR ROOF LEVEL THAT DIRECTLY SUPPORT THE COMPONENT.
B. COMPONENTS WEIGHING LESS THAN 20 POUNDS, OR IN THE CASE OF DISTRIBUTED SYSTEMS, LESS THAN 5 POUNDS PER FOOT, WHICH ARE SUSPENDED FROM A ROOF OR FLOOR OR HUNG FROM A WALL.

THE ANCHORAGE OF ALL MECHANICAL, ELECTRICAL AND PLUMBING COMPONENTS SHALL BE SUBJECT TO THE APPROVAL OF THE DESIGN PROFESSIONAL IN GENERAL RESPONSIBLE CHARGE OR STRUCTURAL ENGINEER DELEGATED RESPONSIBILITY AND ACCEPTANCE BY DSA. THE PROJECT INSPECTOR WILL VERIFY THAT ALL COMPONENTS AND EQUIPMENT HAVE BEEN ANCHORED IN ACCORDANCE WITH THE ABOVE REQUIREMENTS.

PIPING, DUCTWORK, AND ELECTRICAL DISTRIBUTION SYSTEM BRACING NOTE

PIPING, DUCTWORK, AND ELECTRICAL DISTRIBUTION SYSTEMS SHALL BE BRACED TO COMPLY WITH THE FORCES AND DISPLACEMENTS PRESCRIBED IN ASCE 7-16 SECTION 13.3 AS DEFINED IN ASCE 7-16 SECTIONS 13.6.5, 13.6.6, 13.6.7, 13.6.8; AND 2022 CBC, SECTIONS 1617A.1.24, 1617A.1.25 AND 1617A.1.26.

THE METHOD OF SHOWING BRACING AND ATTACHMENTS TO THE STRUCTURE FOR THE IDENTIFIED DISTRIBUTION SYSTEM ARE AS NOTED BELOW. WHEN BRACING AND ATTACHMENTS ARE BASED ON A PREAPPROVED INSTALLATION GUIDE (E.G., HCAI OPM FOR 2013 CBC OR LATER), COPIES OF THE BRACING SYSTEM INSTALLATION GUIDE OR MANUAL SHALL BE AVAILABLE ON THE JOBSITE PRIOR TO THE START OF AND DURING THE HANGING AND BRACING OF THE DISTRIBUTION SYSTEMS. THE STRUCTURAL ENGINEER OF RECORD SHALL VERIFY THE ADEQUACY OF THE STRUCTURE TO SUPPORT THE HANGER AND BRACE LOADS.

MECHANICAL PIPING (MP), MECHANICAL DUCTS (MD), PLUMBING PIPING (PP), ELECTRICAL DISTRIBUTION SYSTEMS (E):

MP☐MD☐PP☐E☐OPTION 1: DETAILED ON THE APPROVED DRAWINGS WITH PROJECT SPECIFIC NOTES AND DETAILS.

MP☐MD☐PP☐E☐OPTION 2: SHALL COMPLY WITH HCAI PREAPPROVAL (OPM #) #_____.

5 ***1" = 1'-0"***
EQUIPMENT ANCHORAGE

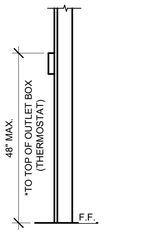

* 30"x48" MIN CLR FLOOR SPACE AT EACH LOCATION FOR PERPENDICULAR APPROACH

9 ***1" = 1'-0"***
MOUNTING ELEV.

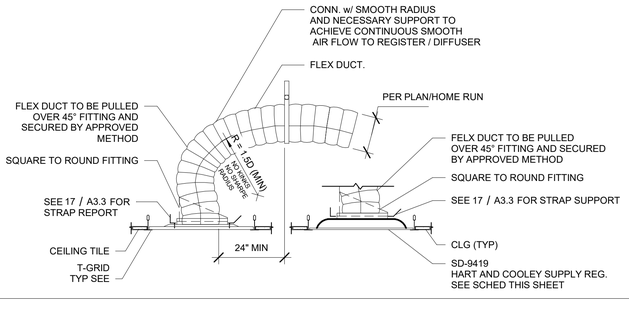

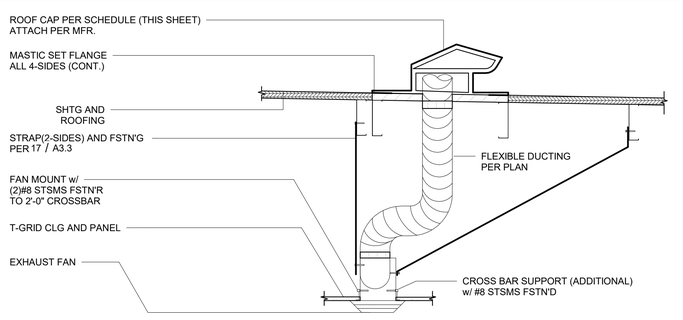

SEE ISOMETRIC DETAIL 17/A3.3 FOR STRAPS

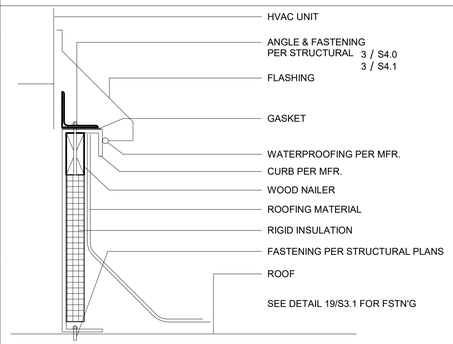

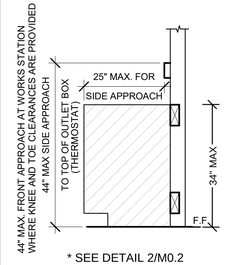

* SEE DETAIL 2/M0.2

10 ***1" = 1'-0"***
ELEV. @ WORKSTATION

10.6 EER and 11 EER

SINGLE PACKAGE VERTICAL HEAT PUMP SCHEDULE

	STANDARD	OPTION #I
TAG	WM-1	WM-1
NOMINAL TONNAGE	3.0 TONS	4.0 TONS
MANUFACTURER	**BARD	**BARD
MODEL#	W36HB-A	W48HC-A
CFM	1150	1500
STATIC PRESSURE	0.15	0.2
MIN OSA	365	548
DRIVE	DIRECT	DIRECT
MCA	20.4	58
MOCP	30	60
VOLTAGE	208/230-1	208/230-1
WIRE SIZE (PWR/GRND)	#6/#10	#6/#10
DESIGN RETURN AIR (DB/WB)	80/67	80/67
SENSIBLE COOLING @ 95° F (PART/FULL)	24.00/28.00	25.900/36.00
TOTAL COOLING @ 95° F (PART/FULL)	32.00/36.00	34.000/45.500
HEATING CAP. BTUH @ 47° F (PART/FULL)	29.200/32.200	29.200/41.500
HEATING CAP. BTUH @ 17° F	20.000	26.000
OPERATING WEIGHT	380#	550#
EER	11.10	11.00
COP @ 47° F	3.30	3.00
COP @ 17° F	-	2.00

14 SEER

SINGLE PACKAGE ROOF TOP HEAT PUMP SCHEDULE

	STANDARD	OPTION #I
TAG	RM-1	RM-1
NOMINAL TONNAGE	3.0 TONS	4 TONS
MANUFACTURER	**CARRIER	**CARRIER
MODEL#	50VTC48	50VTC48
CFM	1200	1500
STATIC PRESSURE	0.15	0.4
MIN OSA	365	548
DRIVE	BELT	BELT
MCA	59	64
MOCP	60	74
VOLTAGE	208/230-1	208/230-1
WIRE SIZE (PWR/GRND)	#6/#10	#4/#8
DESIGN RETURN AIR (DB/WB)	80/67	80/67
SENSIBLE COOLING @ 95° F	30.500	35.260
TOTAL COOLING @ 95° F	35.600	49.600
HEATING CAP. BTUH @ 47° F	35.500	45.5000
HEATING CAP. BTUH @ 17° F	18.400	25.600
OPERATING WEIGHT	572#	560#
SEER	14.00	14.00
HSPF	8.1	8.0
COP @ 47° F	3.4	3.4
COP @ 17° F	2.3	2.4

ATTACHMENT 3: Mechanical Equipment List

This attachment summarizes all the HVAC equipment and controls required for each size modular building.

Indicate NA for all non-applicable boxes.

LIST OF MECHANICAL EQUIPMENT					
Any substitutions of equipment made to the approved PC must be equal or better than the equipment listed below.					
Modular size and equipment type					Responsible for programming/commissioning (builder or HVAC contractor)
HVAC Equipment Make and Model Equipment ID on Plans					NA
HVAC Equipment Efficiency Cooling Heating Phase					NA
BTUH Heating Cooling					NA
Indoor/Blower Fan Belt/Let CFM @ ø 1" Inch WC Motor Horsepower Maximum allowed or Not Allowed if not modeled					NA
Thermostat (Sensor) Make and Model Setback – § 120.2(j) Heat Pumps – § 110.2(b)					(Responsible Person) Required Acceptance Test NRCA-MCH-03-A
Shut off and Reset Make and Model Occupancy Sensor or 4 hr override – § 120.2(e)					(Responsible Person) Required Acceptance Test NRCA-MCH-03-A
Economizer Controls Make and Model – § 140.4(e)					(Responsible Person) Required Acceptance Test NRCA-MCH-02-A and 05-A
Economizer Fault Detection Software Make and Model - § 120.2(i)					(Responsible Person) Required Acceptance Test NRCA-MCH-02-A and 05-A
Outside Air In CFM from T24 - § 120.1(c)3					(Responsible Person) Required Acceptance Test NRCA-MCH-12-A or 13-A
Ventilation Kit If economizer is not used specify Make and Model					(Responsible Person) Required Acceptance Test NRCA-MCH-02-A
Demand Control Ventilation Co2 Sensor with ppm display Make and Model - §120.1(d)4					(Responsible Person) Required Acceptance Test NRCA-MCH-06-A
Minimum DOV Outside Air in CFM 15 X conditioned floor area – § 120.1(d)4					(Responsible Person) Required Acceptance Test NRCA-MCH-02-A
Demand Shed Thermostat or Controls Make Model If DSE is the zone § 120.2(h)					(Responsible Person) Required Acceptance Test NRCA-MCH-11-A

HVAC SCHEDULE

	BUILDING SIZE	# OF HVAC: 3 1/2 TON HVAC	# OF HVAC: 4 TON HVAC
X	24' x 40'	1	
☐	36' x 40'		1
☐	48' x 40'	2	
☐	60' x 40'		2
☐	72' x 40'	3	
☐	84' x 40'		3
☐	96' x 40'	4	
☐	108' x 40'		4
☐	120' x 40'	5	

MERV 13 AND 2-INCH DEPTH PER ENERGY CODE 120.1(C)1. FILTERS REQ'D FOR ALL UNITS

HVAC NOTES
1. SET BACK THERMOSTAT SHALL BE PROVIDED
2. MINIMUM OUTSIDE AIR 15 CFM PER OCCUPANT AND THE UNIT SHALL UTILIZE DEMAND CONTROL VENTILATION
3. MODEL NUMBERS FOR HEAT PUMP UNITS WITH OPTIONAL 5.0 AUXILIARY HEAT STRIPS, WHEN THE HEAT STRIP IS NOT USED, THE MCA AND MOCP MUST BE VERIFIED AND HEAT STRIPS LARGER THAN THE SIZES SHOWN MAY NOT BE USED.

120.1(D)
THERMOSTAT SHALL BE PROGRAMED WITH EXPECTED OCCUPIED TIMES.AIR HANDLER FAN WILL BE PROGRAMED TO RUN DURING ALL OCCUPIED TIMES.PRE-OCCUPANCY PURGE SHALL BE PROGRAMED ONE HOUR PRIOR TO THE MODULAR BUILDING BEING NORMALLY OCCUPIED.

FOR ROOF MOUNTED HVAC UNITS A GASKET SHALL BE PLACED BETWEEN THE CURB AND THE HVAC UNIT.MASTIC SEALANT SHALL BE USED TO SEAL ALL SEAMS BETWEEN THE HVAC UNIT AND THE CURB. THE SUPPLY AND RETURN DUCTS SHALL BE ATTACHED TO THE CURB AND MASTIC SHALL BE USED TO SEAL THE DUCTS TO THE CURB. THE SUPPLY AND RETURN DUCTS SHALL BE THE SAME SIZE AND ALIGN WITH THE HVAC UNIT.

FLEXIBLE AIR DUCTS AND CONNECTORS SHALL BE NOT MORE THAN 5 FEET IN LENGTH AND SHALL NOT BE USED IN LIEU OF RIGID ELBOWS OR FITTINGS. FLEXIBLE AIR DUCTS SHALL BE PERMITTED TO BE USED AS AN ELBOW AT A TERMINAL DEVICE PER ENERGY CODE 120.4.

DUCT INSTALLATION AND PLENUMS SHALL MEET THE REQUIREMENTS OF ENERGY CODE SECTION 120.4 AND THE MANUFACTURERS INSTALLATION INSTRUCTIONS.
HORIZONTAL FLEX DUCT SHALL BE SUPPORTED AT A MAXIMUM 4 FT INTERVALS, WITH HANGING STRAPS A MINIMUM 1 1/2 IN. WIDE.
DUCTS MUST BE PULLED TIGHT WITH A MAXIMUM SAG OF ½" PER FOOT OF HORIZONTAL RUN.
DUCT SHALL NOT BE KINKED OR CRUSHED.
BEND/RADIUS EQUAL TO THE DUCT DIAMETER OR GREATER.

SECTION 915
CARBON MONOXIDE DETECTION

915.2.3 Group E occupancies. Carbon monoxide detection shall be installed in classrooms in Group E occupancies. Carbon monoxide alarm signals shall be automatically transmitted to an on-site location that is staffed byschool personnel.

915.3 Detection equipment. Carbon monoxide detection required by Sections 915.1 through 915.2.3 shall be provided by carbon monoxide alarms complying with Section 915.4 or carbon monoxide detection systems complying with Section 915.5.

CFC 915.1 - Classrooms which contain a fuel-burning appliance or a fuel-burning fireplace or are supplied by a forced-air furnace shall be provided with a carbon monoxide detexction system. Provide a carbon monoxide detection system

GENERAL NOTE:
UTILILITIES THAT SPAN BETWEEN UNITS OR ACROSS SEISMIC SEPARATION JOINTS MUST BE DESIGNED WITH A FLEXIBLE CONNECTION THAT CAN ACCOMMODATE DIFFERENTIAL MOVEMENTS

PROJECT SPECIFIC STATE AGENCY APPROVAL

IDENTIFICATION STAMP
DIV. OF THE STATE ARCHITECT
APP: 02-123433 INC:
REVIEWED FOR
SS ☑ FLS ☑ ACS ☑
DATE: 01/20/2026

R&S TAVARES ASSOCIATES
DESIGN ★ CONSULTING ★ PROJECT MGT
11590 W BERNARDO COURT, SUITE 100
SAN DIEGO, CA 92127
WWW.RSTAVARES.COM

PROFESSIONAL STAMP

REGISTERED PROFESSIONAL ENGINEER
MANNY D. FRANCISCO
No. 13380
Exp. 03/31/24
STRUCTURAL
STATE OF CALIFORNIA
RST#22088
02/16/24

THE PLANS, IDEAS & DESIGNS SHOWN ON THESE DRAWINGS ARE THE PROPERTY OF R&S TAVARES ASSOCIATES, INC. DEVISED SOLELY FOR THIS CONTRACT. THESE PLANS SHALL NOT BE USED, IN WHOLE OR IN PART, FOR ANY PURPOSE FOR WHICH THEY WERE NOT INTENDED WITHOUT THE EXPRESS WRITTEN CONSENT OF R&S TAVARES ASSOCIATES, INC. ©

CLIENT

Class Leasing
1651Juanita Street, San Jacinto, CA 92583
Voice (951) 943-1908 Fax (951)943-5768

ORIGINAL PC STATE AGENCY APPROVAL

APPROVED
DIV. OF THE STATE ARCHITECT
APP: 04-123059 PC
REVIEWED FOR
SS ☑ FLS ☑ ACS ☑ CG ☑
DATE: 02/20/2024

Revision Schedule

#	Description	Date

PRE-CHECK (PC) DOCUMENT

Code: 2022 CBC

A separate project application for construction is required

PROJECT TITLE
PC 2022 CBC: 24' x 40' EXPANDABLE TO 120' x 40'

SHEET TITLE
MISCELLANEOUS NOTES & DETAILS

PROJECT NUMBER
22088

DRAWN BY
rMc/SC

CHECKED BY
RH/RT

DATE

SHEET NO.
M0.1

SHEET OF

C:\Users\User\Documents\20093 - Aries, 24x40 PC - MainFile - Low Seismic_6.7_CESAR24D63.rvt

6/15/2021 11:53:12 PM

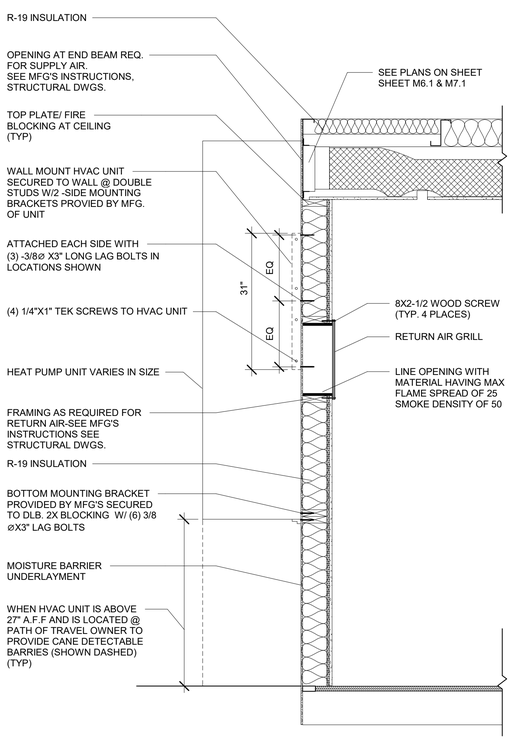

1 *3/4" = 1'-0"*
HVAC @ WALL SECTION

FIGURE 308.2.2. OBSTRUCTED HIGH FORWARD REACH

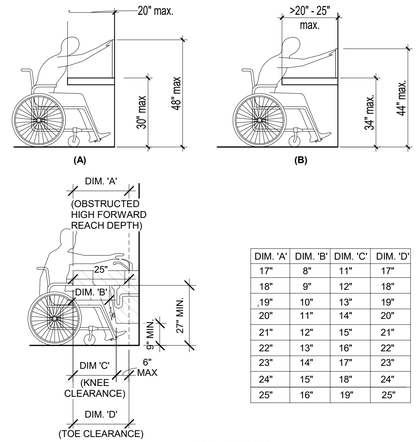

DIM. 'A'	DIM. 'B'	DIM. 'C'	DIM. 'D'
17"	8"	11"	17"
18"	9"	12"	18"
,19"	10"	13"	19"
20"	11"	14"	20"
21"	12"	15"	21"
22"	13"	16"	22"
23"	14"	17"	23"
24"	15"	18"	24"
25"	16"	19"	25"

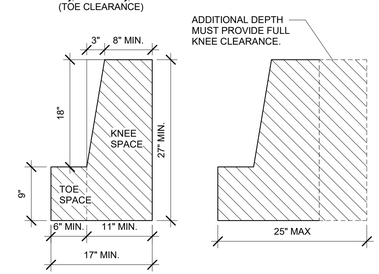

2 ***TOE SPACE CLEARANCE***

120.1(D)
THERMOSTAT SHALL BE PROGRAMED WITH EXPECTED OCCUPIED TIMES.AIR HANDLER FAN WILL BE PROGRAMED TO RUN DURING ALL OCCUPIED TIMES.PRE-OCCUPANCY PURGE SHALL BE PROGRAMED ONE HOUR PRIOR TO THE MODULAR BUILDING BEING NORMALLY OCCUPIED.

FOR ROOF MOUNTED HVAC UNITS A GASKET SHALL BE PLACED BETWEEN THE CURB AND THE HVAC UNIT.MASTIC SEALANT SHALL BE USED TO SEAL ALL SEAMS BETWEEN THE HVAC UNIT AND THE CURB. THE SUPPLY AND RETURN DUCTS SHALL BE ATTACHED TO THE CURB AND MASTIC SHALL BE USED TO SEAL THE DUCTS TO THE CURB. THE SUPPLY AND RETURN DUCTS SHALL BE THE SAME SIZE AND ALIGN WITH THE HVAC UNIT.

FLEXIBLE AIR DUCTS AND CONNECTORS SHALL BE NOT MORE THAN 5 FEET IN LENGTH AND SHALL NOT BE USED IN LIEU OF RIGID ELBOWS OR FITTINGS. FLEXIBLE AIR DUCTS SHALL BE PERMITTED TO BE USED AS AN ELBOW AT A TERMINAL DEVICE PER ENERGY CODE 120.4.

DUCT INSTALLATION AND PLENUMS SHALL MEET THE REQUIREMENTS OF ENERGY CODE SECTION 120.4 AND THE MANUFACTURERS INSTALLATION INSTRUCTIONS.
HORIZONTAL FLEX DUCT SHALL BE SUPPORTED AT A MAXIMUM 4 FT INTERVALS, WITH HANGING STRAPS A MINIMUM 1 1/2 IN. WIDE.
DUCTS MUST BE PULLED TIGHT WITH A MAXIMUM SAG OF ½" PER FOOT OF HORIZONTAL RUN.
DUCT SHALL NOT BE KINKED OR CRUSHED.
BEND/RADIUS EQUAL TO THE DUCT DIAMETER OR GREATER.

UPON SITE PLACEMENT OR SITE CONSTRUCTION, THE OPERATION AND MAINTENANCE DOCUMENTATION FOR ALL MECHANICAL AND LIGHTING SYSTEMS AND CONTROLS SHALL BE PROVIDED BY THE MODULAR BUILDING MANUFACTURER, OR THE GENERAL CONTRACTOR FOR THE PERMANENT MODULAR RELOCATABLE BUILDING AND DELIVERED TO THE OWNER.

AT THE TIME OF ROUGH INSTALLATION, DURING IN THE FACTORY OR ON THE CONSTRUCTION SITE, DURING SHIPMENT (IF APPLICABLE) AND UNTIL FINAL STARTUP OF THE HEATING COOLING AND VENTILATING EQUIPMENT, ALL DUCT AND OTHER RELATED DISTRIBUTION COMPONENT OPENINGS SHALL BE PROCTED TO REDUCE THE AMOUNT OF DUST, WATER AND DEBRIS WHICH MAY ENTER THE SYSTEM

3 ***1/4" = 1'-0"***
MECHANICAL NOTES

ATTACHMENT 3: Mechanical Equipment List

This attachment summarizes all the HVAC equipment and controls required for each size modular building.

Indicate NA for all non-applicable boxes.

LIST OF MECHANICAL EQUIPMENT

Any substitutions of equipment made to the approved PC must be equal or better than the equipment listed below.

Modular size and equipment type	4.0 TON WM HVAC	5.0 TON WM HVAC	3 TON WM HVAC	Responsible for programing/commissioning (builder or HVAC contractor)
HVAC Equipment Make and Model	BARD W46HC-A	BARD W60H1	BARD W36 HB	NA
BTUH Heating Cooling	41,500 45,500	51,000 55,500	38,500 40,000	NA
Indoor/Blower Fan BHP/HP CFM @ ≥ ? inch WC	1/3-825-2 2.5 24"-2900	1/3-825-2 4.1 24"-3700	1/3-825-2 2.5 24"-2900	NA
Strip Heating Maximum allowed or Not Allowed if not modeled	PER TITLE 24	PER TITLE 24	PER TITLE 24	NA
Minimum allowed SEER, EER, HSPF and/or COP, and Phase	14, 11, 3.40, 3	14, 11, 3.30 ,3	14, 11, 3.40, 3	NA
Thermostat Make and Model Setback – § 110.2(c) Heat Pumps – § 110.2(b)	BARD #8403-061 C48H1	BARD #8403-061 C60H1	BARD #8403-061 C42H1	(Responsible Person) Required Acceptance Test NRCA-MCH-03-A
Shut-off and Reset Make and Model Occupancy Sensor or 4 hr override – § 120.2(e)	STANDARD BUILT-IN	STANDARD BUILT-IN	STANDARD BUILT-IN	(Responsible Person) Required Acceptance Test NRCA-MCH-03-A
Economizer Equipment Make and Model – § 140.4(e)	ECON-NC5	ECON-NC5	ECON-NC5	(Responsible Person) Required Acceptance Test NRCA-MCH-02-A and 05-A
Economizer Controls Make and Model – § 140.4(e)	ECON-WD5	ECON-WD5	ECON-WD5	(Responsible Person) Required Acceptance Test NRCA-MCH-02-A and 05-A
Economizer Fault Detection Software Make and Model - § 120.2(i)	ECON-DB5	ECON-DB5	ECON-DB5	(Responsible Person) Required Acceptance Test NRCA-MCH-12-A or 13-A
Outside Air In CFM - § 120.1(c)3	PER TITLE 24	PER TITLE 24	PER TITLE 24	(Responsible Person) Required Acceptance Test NRCA-MCH-02-A
Ventilation Kit If economizer is not installed specify Make and Model.	N/A	N/A	N/A	(Responsible Person) Required Acceptance Test NRCA-MCH-02-A
Demand Control Ventilation Co2 Sensor with ppm display Make and Model - §120.1(d)4	PER BARD SPECIFICAIONS	PER BARD SPECIFICAIONS	PER BARD SPECIFICAIONS	(Responsible Person) Required Acceptance Test NRCA-MCH-06-A
Minimum Designed Outside Air in CFM - § 120.1(c)3	PER TITLE 24	PER TITLE 24	PER TITLE 24	(Responsible Person) Required Acceptance Test NRCA-MCH-02-A
Demand Shed Thermostat Make Model If DDC to the zone § 120.2(h)				(Responsible Person) Required Acceptance Test NRCA-MCH-11-A

NOTE: SEE M0.1 AND CUT SHEETS FOR ADDITIONAL EQUIPMENT OPTIONS

SEQUENCE OF OPERATIONS

BARD W48HC-A

Sequence of Operation

Cooling

Circuit R-Y1 makes at thermostat pulling in compressor contactor, starting the compressor and outdoor motor. (See ***NOTE*** under **Condenser Fan Operation** concerning models equipped with low ambient control.) The G (indoor motor) circuit is automatically completed by the thermostat on any call for cooling operation or can be energized by manual fan switch on subbase for constant air circulation. On a call for 2nd stage heating, circuit R-W2 makes at the thermostat pulling in heat contactor for the strip heat and blower operation. On a call for third stage heat, R-W3 makes bringing on second heat contactor, if so equipped.

Heating

A 24V solenoid coil on reversing valve controls heating cycle operation. Two thermostat options, one allowing "Auto" changeover from cycle to cycle and the other constantly energizing solenoid coil during heating season—thus eliminating pressure equalization noise except during defrost, are to be used.

On "Auto" option, a circuit is completed from R-B/W1 and R-Y1 on each heating "on" cycle, energizing reversing valve solenoid and pulling in compressor contactor, starting compressor and outdoor motor. R-G also make starting indoor blower motor. Heat pump heating cycle now in operation.

The second option has no "Auto" changeover position, but instead energizes the reversing valve solenoid constantly whenever the system switch on subbase is placed in "Heat" position, the "B" terminal being constantly energized from R. A thermostat demand for heat completes R-Y1 circuit, pulling in compressor contactor starting compressor and outdoor motor. R-G also make starting indoor blower motor.

On a call for 2nd stage heating, circuit R-W2 makes at the thermostat pulling in the heat contactor for the strip heat and blower operation. On a call for third stage heat, R-B/W1 breaks, dropping out heat pump, and R-W3 makes, bringing on second heat contactor, if so equipped.

Balanced Climate™ Mode

Balanced Climate™ is a great comfort feature that can easily be applied under any normal circumstances. If the Bard air conditioning system is being set up in a typical environment where 72°F is the lowest cooling setpoint, remove the Y1/Y2 jumper and install a 2-stage cooling thermostat. This will increase the humidity removal up to 35% and provide a much more comfortable environment. This mode will also increase the supply temperature when in heating mode. When Balanced Climate mode is activated, it is employed in both heating and cooling modes.

NOTE: *Units with mechanical dehumidification require an additional connection to be made when enabling Balanced Climate. Refer to dehumidification supplemental instructions for this step.*

If the application is likely to require air conditioning operation below 60°F outdoor conditions, a low ambient control (LAC) kit must be installed. The LAC kit is equipped with an outdoor temperature switch that disables Balanced Climate mode when the outdoor temperature drops below 50°F. This prevents potential evaporator coil freeze up issues. The LAC kit also comes with an evaporator freeze protection thermostat that cuts out the compressor if the evaporator begins to freeze up.

If the unit is being installed with any ventilation package, a Bard LAC kit must be installed. Failure to utilize an LAC with any air conditioner can cause coil freeze up.

Balanced Climate can readily be applied to duct-free (supply and return air grille) applications. It may also be applied to ducted applications with **limited static of 0.20" ESP (total including both supply and return statics)**. Consult Bard Application Engineering for details prior to implementation.

CAUTION: *Balanced Climate is not a replacement for a dehumidification (hot gas reheat) unit for extreme applications, but rather an enhancement feature for limited climates and applications.*

BARD C60HC1 & C42HC1

Sequence of Operation

Cooling Stage 1 – Circuit R-Y makes at thermostat pulling in compressor contactor, starting the Compressor and outdoor motor. The G (indoor motor) circuit is automatically completed on any call for cooling operation or can be energized by manual fan switch on subbase for constant air circulation.

Cooling Stage 2 – Circuit R-Y1 makes at the thermostat, energizing the 2nd stage solenoid in the compressor. Default position is not energized. Compressor will run at low capacity until this solenoid is energized.

Heating Stage 1 – A 24V solenoid coil on reversing valve controls heating cycle operation. Two thermostat options, one allowing "Auto" changeover from cycle to cycle and the other constantly energizing solenoid coil during heating season and thus eliminating pressure equalization noise except during defrost, are to be used. On "Auto" option, a circuit is completed from R-B and R-Y on each heating "on" cycle, energizing reversing valve solenoid and pulling in compressor contactor starting compressor and outdoor motor. R-G also make, starting indoor blower motor. Heat pump heating cycle now in operation. The second option has no "Auto" changeover position, but instead energizes the reversing valve solenoid constantly whenever the system switch on subbase is placed in "Heat" position, the "B" terminal being constantly energized from R. A thermostat demand for Stage 1 heat completes R-Y circuit, pulling in compressor contactor and starting compressor and outdoor motor. R-G also make, starting indoor blower motor.

Heating Stage 2 – Circuit R-Y2 makes at the thermostat, energizing the 2nd stage solenoid in the compressor.

Pressure Service Ports

High and low pressure service ports are installed on all units so that the system operating pressures can be observed. Pressure tables 6A and 6B cover all models. It is imperative to match the correct pressure table to the unit by model number.

This unit employs high-flow Coremax valves instead of the typical Schrader type valves.

WARNING! Do NOT use a Schrader valve core removal tool with these valves. Use of such a tool could result in eye injuries or refrigerant burns!

To change a Coremax valve without first removing the refrigerant, a special tool is required which can be obtained at www.fastestinc.com/en/SCCAO7H. See the replacement parts manual for replacement core part numbers.

CARRIER 50VTC48L

OPERATION

Sequence of Operation—When free cooling is not available, the compressor will be controlled by the thermostat. When free cooling is available, the outdoor-air damper is modulated by the Economizer control to provide a 50° to 55°F (10° to 12.8°C) supply-air temperature into the zone. As the supply-air temperature fluctuates above 55° (12.8°C) or below 50°F (10°C), the dampers will be modulated (open or close) to bring the supply-air temperature back within the set points. For Economizer operation, there must be a thermostat call for the fan (G). This will move the damper to its minimum position during the occupied mode.

NOTE: The DCV Max potentiometer must be closed (CCW) when not using CO_2 sensor.

Above 50°F (10°C) supply-air temperature, the dampers will modulate from 100% open to the minimum open position. From 50°F to 45°F (10° to 7.2°C) supply-air temperature, the dampers will maintain at the minimum open position. Below 45°F (7.2°C), the dampers will be completely shut. As the supply-air temperature rises, the dampers will come back open to the minimum open position once the supply-air temperature rises to 48°F (8.9°C). If power exhaust is installed, as the outdoor-air damper opens and closes, the power exhaust fans will be energized and deenergized. If field-installed accessory CO_2 sensors are connected to the Economizer control, a demand controlled ventilation strategy will begin to operate. As the CO_2 level in the zone increases above the CO_2 set point, the minimum position of the damper will be increased proportionally. As the CO_2 level decreases because of the increase in fresh air, the outdoor-air damper will be proportionally closed. Damper position will follow the higher demand condition from DCV mode or free cooling mode. Damper movement from full closed to full open (or vice versa) will take between 1 1/2 and 2 1/2 minutes. If free cooling can be used as determined from the appropriate changeover command (dry bulb, enthalpy curve, or differential enthalpy), a call for cooling (Y1 closes at the thermostat) will cause the control to modulate the dampers open to maintain the supply air temperature set point at 50° to 55°F (10° to 12.8°C). As the supply air temperature drops below the set point range of 50° to 55°F (10° to 12.8°C), the control will modulate the outdoor-air dampers closed to maintain the proper supply-air temperature.

TABLE 140.4-E AIR ECONOMIZER HIGH LIMIT SHUT OFF CONTROL REQUIREMENTS

Device Type[a]	Climate Zones	Required High Limit (Economizer Off When): Equation[b]	Description
Fixed Dry Bulb	1, 3, 5, 11-16	$T_{OA} > 75°F$	Outdoor air temperature exceeds 75°F
	2, 4, 10	$T_{OA} > 73°F$	Outdoor air temperature exceeds 73°F
	6, 8, 9	$T_{OA} > 71°F$	Outdoor air temperature exceeds 71°F
	7	$T_{OA} > 69°F$	Outdoor air temperature exceeds 69°F
Differential Dry Bulb	1, 3, 5, 11-16	$T_{OA} > T_{RA}°F$	Outdoor air temperature exceeds return air temperature
	2, 4, 10	$T_{OA} > T_{RA}-2°F$	Outdoor air temperature exceeds return air temperature minus 2°F
	6, 8, 9	$T_{OA} > T_{RA}-4°F$	Outdoor air temperature exceeds return air temperature minus 4°F
	7	$T_{OA} > T_{RA}-6°F$	Outdoor air temperature exceeds return air temperature minus 6°F
Fixed Enthalpy[c] + Fixed Drybulb	All	$h_{OA} > 28$ Btu/lb[c] or $T_{OA} > 75°F$	Outdoor air enthalpy exceeds 28 Btu/lb of dry air[c] or Outdoor air temperature exceeds 75°F

[a] Only the high limit control devices listed are allowed to be used and at the setpoints listed. Others such as Dew Point, Fixed Enthalpy, Electronic Enthalpy, and Differential Enthalpy Controls, may not be used in any Climate Zone for compliance with Section 140.4(e)1 unless approval for use is provided by the Energy Commission Executive Director.

[b] Devices with selectable (rather than adjustable) setpoints shall be capable of being set to within 2°F and 2 Btu/lb of the setpoint listed.

[c] At altitudes substantially different than sea level, the Fixed Enthalpy limit value shall be set to the enthalpy value at 75°F and 50% relative humidity. As an example, at approximately 6,000 foot elevation, the fixed enthalpy limit is approximately 30.7 Btu/lb.

ALL ECONOMIZERS MUST BE PROGRAMMED IN THE FIELD BY THE HVAC CONTRACTOR TO THE TEMPERATURE IN TABLE 140.4-E

PC DESIGN REVIEW INFORMATION
Title 24, Part 6, Energy Code
DSA Application #: DA-123369
Calculation Date/Time of Energy Report: 2023-07-26-XX
Model Name and Option: 24'x40' PC (Wood Frame Walls)
Total Floor Area: 960 ft²
HVAC System Type: Wall Mounted A/C

Climate Zone 14 (Palmdale)

Azimuth (Front Orientation)		Standard Design	Proposed Design	Margin	Margin %	Worst Case
30°	TDV-E	366.40	297.14	69.26	***18.9028%***	
	TDV-T	366.40	297.14	69.26	***18.9028%***	
	SOURCE	36.24	30.65	5.59	***15.4249%***	
75°	TDV-E	358.72	295.30	63.42	***17.6795%***	**
	TDV-T	358.72	295.30	63.42	***17.6795%***	**
	SOURCE	35.63	30.56	5.07	***14.2286%***	**
120°	TDV-E	363.47	296.43	67.04	***18.4444%***	
	TDV-T	363.47	296.43	67.04	***18.4444%***	
	SOURCE	36.01	30.64	5.37	***14.9125%***	
165°	TDV-E	366.46	297.42	69.04	***18.8397%***	
	TDV-T	366.46	297.42	69.04	***18.8397%***	
	SOURCE	36.22	30.64	5.58	***15.4003%***	
210°	TDV-E	366.40	297.14	69.26	***18.9028%***	
	TDV-T	366.40	297.14	69.26	***18.9028%***	
	SOURCE	36.24	30.65	5.59	***15.4249%***	
255°	TDV-E	358.72	295.30	63.42	***17.6795%***	**
	TDV-T	358.72	295.30	63.42	***17.6795%***	**
	SOURCE	35.63	30.56	5.07	***14.2286%***	**
300°	TDV-E	363.47	296.44	67.03	***18.4417%***	
	TDV-T	363.47	296.44	67.03	***18.4417%***	
	SOURCE	36.01	30.64	5.37	***14.9125%***	
345°	TDV-E	366.46	297.42	69.04	***18.8397%***	
	TDV-T	366.46	297.42	69.04	***18.8397%***	
	SOURCE	36.22	30.64	5.58	***15.4059%***	

Climate Zone 15 (Palm Springs)

Azimuth (Front Orientation)		Standard Design	Proposed Design	Margin	Margin %	Worst Case
30°	TDV-E	378.51	303.65	74.86	***19.7775%***	
	TDV-T	378.51	303.65	74.86	***19.7775%***	
	SOURCE	33.26	26.66	6.60	***19.8437%***	
75°	TDV-E	369.92	301.77	68.15	***18.4229%***	**
	TDV-T	369.92	301.77	68.15	***18.4229%***	**
	SOURCE	32.57	26.55	6.02	***18.4833%***	**
120°	TDV-E	370.43	302.74	67.69	***18.2734%***	
	TDV-T	370.43	302.74	67.69	***18.2734%***	
	SOURCE	32.71	26.64	6.07	***18.5570%***	
165°	TDV-E	378.42	303.43	74.99	***19.8166%***	
	TDV-T	378.42	303.43	74.99	***19.8166%***	
	SOURCE	33.23	26.65	6.58	***19.8014%***	
210°	TDV-E	378.51	303.65	74.86	***19.7775%***	
	TDV-T	378.51	303.65	74.86	***19.7775%***	
	SOURCE	33.26	26.66	6.60	***19.8437%***	
255°	TDV-E	369.92	301.77	68.15	***18.4229%***	**
	TDV-T	369.92	301.77	68.15	***18.4229%***	**
	SOURCE	32.57	26.55	6.02	***18.4833%***	**
300°	TDV-E	370.43	302.74	67.69	***18.2734%***	
	TDV-T	370.43	302.74	67.69	***18.2734%***	
	SOURCE	32.71	26.64	6.07	***18.5570%***	
345°	TDV-E	378.42	303.43	74.99	***19.8166%***	
	TDV-T	378.42	303.43	74.99	***19.8166%***	
	SOURCE	33.23	26.65	6.58	***19.8014%***	

Climate Zone 16 (Blue Canyon)

Azimuth (Front Orientation)		Standard Design	Proposed Design	Margin	Margin %	Worst Case
30°	TDV-E	307.24	278.52	28.72	***9.3477%***	**
	TDV-T	307.24	278.52	28.72	***9.3477%***	**
	SOURCE	54.83	41.05	13.78	***25.1323%***	**
75°	TDV-E	341.77	272.69	69.08	***20.2124%***	
	TDV-T	341.77	272.69	69.08	***20.2124%***	
	SOURCE	65.39	40.97	24.42	***37.3452%***	
120°	TDV-E	307.35	273.40	33.95	***11.0460%***	
	TDV-T	307.35	273.40	33.95	***11.0460%***	
	SOURCE	54.88	41.01	13.87	***25.2723%***	
165°	TDV-E	309.02	273.26	35.76	***11.5721%***	
	TDV-T	309.02	273.26	35.76	***11.5721%***	
	SOURCE	54.91	41.02	13.89	***25.2959%***	
210°	TDV-E	307.24	273.52	33.72	***10.9751%***	
	TDV-T	307.24	273.52	33.72	***10.9751%***	
	SOURCE	54.83	41.05	13.78	***25.1323%***	
255°	TDV-E	341.77	272.69	69.08	***20.2124%***	
	TDV-T	341.77	272.69	69.08	***20.2124%***	
	SOURCE	65.39	40.97	24.42	***37.3452%***	
300°	TDV-E	307.35	273.40	33.95	***11.0460%***	
	TDV-T	307.35	273.40	33.95	***11.0460%***	
	SOURCE	54.88	41.01	13.87	***25.2723%***	
345°	TDV-E	309.02	273.26	35.76	***11.5721%***	
	TDV-T	309.02	273.26	35.76	***11.5721%***	
	SOURCE	54.91	41.02	13.89	***25.2959%***	

Reference: Energy Code, Appendix NA4, Table NA4-1
* In the event that there are identical percentages, select one.
**This table is not currently generated by the energy software.
Least Compliance Margin Orientation

Notes:
<

PROJECT SPECIFIC STATE AGENCY APPROVAL

IDENTIFICATION STAMP
DIV. OF THE STATE ARCHITECT
APP: 02-123433 INC: A
REVIEWED FOR
SS ☑ FLS ☑ ACS ☑
DATE: 01/20/2026

R&S TAVARES ASSOCIATES
DESIGN ★ CONSULTING ★ PROJECT MGT
11590 W. Bernardo Court, Suite 100
San Diego, CA 92127
Phone: (858) 444-3344
www.rstavares.com

PROFESSIONAL STAMP

REGISTERED PROFESSIONAL ENGINEER
MANNY D. FRANCISCO
No. 63380
Exp. 03/31/24
STRUCTURAL
STATE OF CALIFORNIA
RST#22088
02/16/24

THE PLANS, IDEAS & DESIGNS SHOWN ON THESE DRAWINGS ARE THE PROPERTY OF R&S TAVARES ASSOCIATES, INC. DEVISED SOLELY FOR THIS CONTRACT. THESE PLANS SHALL NOT BE USED, IN WHOLE OR IN PART, FOR ANY PURPOSE FOR WHICH THEY WERE NOT INTENDED WITHOUT THE EXPRESS WRITTEN CONSENT OF R&S TAVARES ASSOCIATES, INC. ©

CLIENT

Class Leasing
1651Juanita Street, San Jacinto, CA 92583
Voice (951) 943-1908 Fax (951)943-5768

ORIGINAL PC STATE AGENCY APPROVAL

APPROVED
DIV. OF THE STATE ARCHITECT
APP: 04-123059 PC
REVIEWED FOR
SS ☑ FLS ☑ ACS ☑ CG ☑
DATE: 02/20/2024

Revision Schedule

#	Description	Date

PROJECT TITLE
PC 2022 CBC: 24' x 40' EXPANDABLE TO 120' x 40'

SHEET TITLE
MISCELLANEOUS NOTES & DETAILS

PROJECT NUMBER 22088
DRAWN BY Author
CHECKED BY Checker
DATE
SHEET NO. M0.2
SHEET OF

BUILDING ENERGY ANALYSIS REPORT

PROJECT:
24X40 (PC 04-121369) - Wall AC
Climate Zone 14
Palmdale, CA

Project Designer:
R & S Tavares Associates
11590 W. Bernardo Court, Suite 100
San Diego, Ca. 92127

Report Prepared by:
LAL B. SAHGAL
LSA CONSULTING ENGINEERS
83, WINDSWEPT WAY
MISSION VIEJO, CA 92692
(949) 830-4746

Job Number:

Date:
7/26/2023

The EnergyPro computer program has been used to perform the calculations summarized in this compliance report. This program has approval and is authorized by the California Energy Commission for use with both the Residential and Nonresidential 2022 Building Energy Efficiency Standards.

This program developed by EnergySoft, LLC – www.energysoft.com.

TABLE OF CONTENTS

Cover Page	1
Table of Contents	2
Form NRCC/LMCC-PRF-E Certificate of Compliance	3
HVAC System Heating and Cooling Loads Summary	20

Project Name:	24X40 (PC 04-121369) - Wall AC	**Date Prepared:**	2023-07-25

A. General Information

1	Project Name	24X40 (PC 04-121369) - Wall AC			
2	Run Title	Title 24 Analysis			
3	Project Location	Climate Zone 14			
4	City	Palmdale	5	Standards Version	Compliance 2022
6	Zip code	99999	7	Compliance Software (version)	EnergyPro 9.1
8	Climate Zone	14	9	Building Orientation (deg)	75
10	Building Type(s)	• Nonresidential	11	Weather File	PALMDALE_STYP20.epw
12	Project Scope	• New complete scope	13	Number of Dwelling Units	0
14	Total Conditioned Floor Area in Scope (ft^2)	960	15	Total # of hotel/motel rooms	0
16	Total Unconditioned Floor Area (ft^2)	0	17	Fuel Type	Natural gas
18	Nonresidential Conditioned Floor Area	960	19	Total # of Stories (Habitable Above Grade)	1
20	Residential Conditioned Floor Area	0			

B. PROJECT SUMMARY

Table B shows which building components are included in the performance calculation. If indicated as not included, the project must show compliance prescriptively if within the permit application.

Building Components Complying via Performance

Envelope (See Table G)	Nonres	Performance	Solar Thermal Water Heating (See Table I3)	☐	Performance
	MultiFam	Not Included		☒	Not Included
Mechanical (See Table H)	Nonres	Performance	Covered Process: Commercial Kitchens (see Table J)	☐	Performance
	MultiFam	Not Included		☒	Not Included
Domestic Hot Water (See Table I)	Nonres	Not Included	Covered Process: Laboratory Exhaust (see Table J)	☐	Performance
	MultiFam	Not Included		☒	Not Included
Lighting (Indoor Conditioned, see Table K)	Nonres	Performance	Photovoltaics (see Table F)	☐	Performance
	MultiFam	Not Included		☒	Not Included
			Battery (see Table F)	☐	Performance
				☒	Not Included

Building Components Complying Prescriptively

The following building components are ONLY eligible for prescriptive compliance and should be documented on the NRCC form listed if within the scope of the permit application (i.e. compliance will not be shown on the NRCC-PRF-E).	
Indoor Lighting (Unconditioned) 140.6 & 170.2(e)	NRCC-LTI-E is required
Outdoor Lighting 140.7 & 170.2(e)	NRCC-LTO-E is required
Sign Lighting 140.8 & 170.2(e)	NRCC-LTS-E is required

Building Components Complying with Mandatory Measures

Electrical power systems, commissioning, solar ready, elevator and escalator requirements are mandatory and should be documented on the NRCC form listed if applicable (i.e. compliance will not be shown on the NRCC-PRF-E.)	
Electrical Power Distribution 110.11	NRCC-ELC-E is required
Commissioning 120.8	NRCC-CXR-E is required
Solar and Battery 110.10	NRCC-SAB-E is required

C1. COMPLIANCE SUMMARY

COMPLIES[3]

	Time Dependent Valuaton (TDV)		Source Energy Use
	Efficiency[1] ($kBtu/ft^2$ - yr)	Total[2] ($kBtu/ft^2$ - yr)	Total[2] ($kBtu/ft^2$ - yr)
Standard Design	358.72	358.72	30.7
Proposed Design	295.31	295.31	25.64
Compliance Margins	**63.41**	**63.41**	**5.06**
	Pass	**Pass**	**Pass**

[1] Efficiency measures include improvements like a better building envelope and more efficient equipment
[2] Compliance Totals include efficiency, photovoltaics and batteries
[3] Building complies when efficiency and total compliance margins are greater than or equal to zero and unmet load hour limits are not exceeded

C2. TDV ENERGY COMPLIANCE RESULTS FOR PERFORMANCE COMPONENTS (Annual TDV Energy Use, $kBtu/ft^2$ - yr)

COMPLIES[2]

Energy Component	Standard Design (TDV)	Proposed Design (TDV)	Compliance Margin (TDV)[1]
Space Heating	25.61	42	-16.39
Space Cooling	93.22	95.25	-2.03
Indoor Fans	152.65	81.72	70.93
Heat Rejection	0	0	0
Pumps & Misc.	0	0	0
Domestic Hot Water	54.63	54.6	0.03
Indoor Lighting	32.61	21.74	10.87
Flexibility	---	---	---
EFFICIENCY COMPLIANCE TOTAL	**358.72**	**295.31**	**63.41 (17.7%)**
Photovoltaics	---	---	---
Batteries	---	---	---
TOTAL COMPLIANCE	**358.72**	**295.31**	**63.41 (17.7%)**

[1] Notes: This number in parenthesis following the Compliance Margin in column 4, represents the Percent Better than Standard.

C3. TDV ENERGY RESULTS FOR NON-REGULATED COMPONENTS[1]

Non-Regulated Energy Component	Standard Design (TDV)	Proposed Design (TDV)	Compliance Margin (TDV)[1]
Receptacle	67.93	67.93	---
Process	---	---	---
Other Ltg	---	---	---
Process Motors	---	---	---
TOTAL (TOTAL COMPLIANCE + NON-REGULATED COMPONENTS)	**426.65**	**363.24**	**63.41 (14.9%)**

[1] Notes: This table is not used for Energy Code Compliance.

C4. SOURCE ENERGY COMPLIANCE RESULTS FOR PERFORMANCE COMPONENTS (Annual SOURCE Energy Use, $kBtu/ft^2$ /yr)

COMPLIES[2]

Energy Component	Standard Design (SOURCE)	Proposed Design (SOURCE)	Compliance Margin (SOURCE)[1]
Space Heating	3.73	6.14	-2.41
Space Cooling	3.47	3.65	-0.18
Indoor Fans	14.94	8.15	6.79
Heat Rejection	0	0	0
Pumps & Misc.	0	0	0
Domestic Hot Water	5.99	5.99	0
Indoor Lighting	2.57	1.71	0.86
Flexibility	---	---	---
EFFICIENCY COMPLIANCE TOTAL	**30.7**	**25.64**	**5.06 (16.5%)**
Photovoltaics	---	---	---
Batteries	---	---	---
TOTAL COMPLIANCE	**30.7**	**25.64**	**5.06 (16.5%)**

[1] Notes: This number in parenthesis following the Compliance Margin in column 4, represents the Percent Better than Standard.

C5. SOURCE ENERGY RESULTS FOR NON-REGULATED COMPONENTS[1]

Non-Regulated Energy Component	Standard Design (SOURCE)	Proposed Design (SOURCE)	Compliance Margin (SOURCE)[1]
Receptacle	4.92	4.92	---
Process	---	---	---
Other Ltg	---	---	---
Process Motors	---	---	---
TOTAL (TOTAL COMPLIANCE + NON-REGULATED COMPONENTS)	**35.62**	**30.56**	**5.06 (14.2%)**

[1] Notes: This table is not used for Energy Code Compliance.

C6. 'ABOVE CODE' QUALIFICATIONS

☐ This project is pursuing CalGreen Tier 1 ☐ This project is pursuing CalGreen Tier 2

C7. ENERGY USE SUMMARY

Energy Component	Standard Design Site (MWh)	Proposed Design Site (MWh)	Margin (MWh)	Standard Design Site (MBtu)	Proposed Design Site (MBtu)	Margin (MBtu)
Space Heating	0.8	1.3	-0.5	---	---	---
Space Cooling	2.3	2.3	0	---	---	---
Indoor Fans	5.2	2.8	2.4	---	---	---
Heat Rejection	---	---	---	---	---	---
Pumps & Misc.	---	---	---	---	---	---
Domestic Hot Water	2	2	0	---	---	---
Indoor Lighting	1.2	0.8	0.4	---	---	---
Flexibility	---	---	---	---	---	---
EFFICIENCY TOTAL	**11.5**	**9.2**	**2.3**	**0**	**0**	**0**
Photovoltaics	---	---	---	---	---	---
Batteries	---	---	---	---	---	---
ENERGY USE SUBTOTAL	**11.5**	**9.2**	**2.3**	**0**	**0**	**0**
Receptacle	2.5	2.5	0	---	---	---
Process	---	---	---	---	---	---
Other Ltg	---	---	---	---	---	---
Process Motors	---	---	---	---	---	---
ENERGY USE TOTAL	**14**	**11.7**	**2.3**	**0**	**0**	**0**

PROJECT SPECIFIC STATE AGENCY APPROVAL

IDENTIFICATION STAMP
DIV. OF THE STATE ARCHITECT
APP: 02-123433 INC:
REVIEWED FOR
SS ☑ FLS ☑ ACS ☑
DATE: 01/20/2026

R&S TAVARES ASSOCIATES
DESIGN ★ CONSULTING ★ PROJECT MGT
11590 W Bernardo Court, Suite 100
San Diego, CA 92127
www.rstavares.com

PROFESSIONAL STAMP

REGISTERED PROFESSIONAL ENGINEER
MANMAY D. FRANCHI
No. S3380
Exp. 03/31/24
STRUCTURAL
STATE OF CALIFORNIA
RS T#22088
02/16/24

THE PLANS, IDEAS & DESIGNS SHOWN ON THESE DRAWINGS ARE THE PROPERTY OF R&S TAVARES ASSOCIATES, INC. DEVISED SOLELY FOR THIS CONTRACT. THESE PLANS SHALL NOT BE USED, IN WHOLE OR IN PART, FOR ANY PURPOSE FOR WHICH THEY WERE NOT INTENDED WITHOUT THE EXPRESS WRITTEN CONSENT OF R&S TAVARES ASSOCIATES, INC. ©

CLIENT

Class Leasing
1651Juanita Street, San Jacinto, CA 92583
Voice (951) 943-1908 Fax (951)943-5768

ORIGINAL PC STATE AGENCY APPROVAL

APPROVED
DIV. OF THE STATE ARCHITECT
APP: 04-123059 PC
REVIEWED FOR
SS ☑ FLS ☑ ACS ☑ CG ☑
DATE: 02/20/2024

Revision Schedule

#	Description	Date

PRE-CHECK (PC) DOCUMENT

CODE: 2019 CBC

A separate project application for construction is required

PROJECT TITLE
PC 2022 CBC: 24' x 40' EXPANDABLE TO 120' x 40'

SHEET TITLE
24'x40' T24 CZ 14 (WALL AC)

PROJECT NUMBER
22088

DRAWN BY
rMc/SC

CHECKED BY
RH/RT

DATE
06/15/2021

SHEET NO.
M2.9

SHEET OF

9/7/2023 11:16:14 AM C:\Users\User\Documents\22088- Aries, 24x40 PC - MainFile - Low Seismic_detached (2022)_CES\AR24D63.rvt

C8. ENERGY USE INTENSITY (EUI)

	Standard Design (kBtu/ft² / yr)	Proposed Design (kBtu/ft² / yr)	Margin (kBtu/ft² / yr)	Margin Percentage
GROSS EUI[1]	49.76	41.58	8.18	16.44
NET EUI[1]	49.76	41.58	8.18	16.44

[1] *Notes: Gross EUI is Energy Use Total (not including PV)/Total Building Area. Net EUI is Energy Use Total (including PV)/Total Building Area.*

D1. EXCEPTIONAL CONDITIONS

- The project uses the Simplified Geometry Performance Modeling Approach which is not capable of modeling daylighting controls and assumes the prescriptive Secondary Daylit Control requirements are met. PRESCRIPTIVE COMPLIANCE documentation (form NRCC-LTI-02-E) for the requirements of section 140.6(d) Automatic Daylighting Controls in Secondary Daylit Zones is required.
- The building does not include service water heating. Verify that service water heating is not required and is not included in the design.
- Project is claiming Exception 2 to Section 140.10(a): No PV system is required where the required PV system size is less than 4 kWdc.

G1. ENVELOPE GENERAL INFORMATION (conditioned spaces only)

01	02	03	04
Opaque Surfaces & Orientation	Total Gross Surface Area (ft²)	Total Fenestration Area (ft²)	Window to Wall Ratio (%)
North-Facing[1]	240	32	13.33
East-Facing[2]	400	0	0
South-Facing[3]	240	32	13.33
West-Facing[4]	400	0	0
Total	**1280**	**64**	**5**
Roof	960	14	1.46

Notes
[1]*North-Facing is oriented to within 45 degrees of true north, including 45 00'00" east of north (NE), but excluding 45 00'00" west of north (NW),*
[2]*East-Facing is oriented to within 45 degrees of true east, including 45 00'00" south of east (SE), but excluding 45 00'00" north of east (NE),*
[3]*South-Facing is oriented to within 45 degrees of true south, including 45 00'00" west of south (SW), but excluding 45 00'00" east of south (SE),*
[4]*West-Facing is oriented to within 45 degrees of true west, including 45 00'00" north of west (NW), but excluding 45 00'00" south of west (SW),*

G4. NONRESIDENTIAL AIR BARRIER

01	02
Building Story Name	Air Barrier
Com-Floor 1	No air barrier

G5. OPAQUE SURFACE ASSEMBLY SUMMARY

01	02	03	04	05	06		07	08	09	10
Surface Name	Construction Type	Area (ft²)	Framing Type	Cavity R-Value	Continuous R-Value		Units	Value	Description of Assembly Layers	Status[1]
					Interior	Exterior				
R-19 Wood Framed Wall7	Exterior Wall	1,280	Wood	19	N/A	N/A	U-factor	0.0605	Wood siding - 1/2 in. Vapor permeable felt - 1/8 in. Composite-1 Gypsum Board - 1/2 in. Softwood - 1.5 in.	N
R-19 Metal Floor Crawlsp14	Exterior Floor	960	Metal	19	N/A	N/A	U-factor	0.0588	Vented Crawl Space Composite-2 Plywood - 1/2 in. Carpet - 3/4 in.	N
Standing Seam R-38 Metal16	Roof	960	N/A	36	N/A	N/A	U-factor	0.06	Metal Standing Seam - 1/16 in. Composite-3	N

[1] *Status: N - New, A - Altered, E - Existing*

G7A. FENESTRATION ASSEMBLY SUMMARY (NONRESIDENTIAL)

01	02	03	04	05	06	07	08	09
Fenestration Assembly Name	Fenestration Type/ Product Type / Frame Type	Certification Method[1]	Assembly Method	Area (ft²)	Overall U-factor	Overall SHGC	Overall VT	Status[2]
Sierra Pacific Windows	Vertical fenestration Operable window N/A	NFRC	Manufactured	64	0.35	0.24	0.5	N
Sola tube	Skylight Fixed window N/A	NFRC	Manufactured	14	0.39	0.37	0.65	N

[1] *Notes: Newly installed fenestration shall have a certified NFRC Label Certificate or use the CEC default tables found in Table 110.6-A and Table 110.6-B. Center of Glass (COG) values are for the glass-only, determined by the manufacturer, and are shown for ease of verification. Site-built fenestration values are calculated per Nonresidential Appendix NA6 and are used in the analysis.*
[2] *Status: N - New, A - Altered, E - Existing*

H1. DRY SYSTEM EQUIPMENT (FURNACES, AIR HANDLING UNITS, HEAT PUMPS, VRF, ECONOMIZERS ETC.)

01	02	03	04	05	06	07	08	09	10	11	12
Equipment Name	Equipment Type	Qty	Heating				Cooling			Economizer Type (if present)	Status[1]
			Total Heating Output (kBtu/h)	Supp Heat Output (kBtu/h)	Efficiency Unit	Efficiency	Total Cooling Output (kBtu/h)	Efficiency Unit	Efficiency		
AC-1	Single Package VHP Air System	1	34.37	13.65	COP	3.3	34.56	EER	11	Fixed DB	N

[1] *Status: N - New, A - Altered, E - Existing*

H3. NONRESIDENTIAL / COMMON USE AREA FAN SYSTEMS SUMMARY

01	02	03	04	05	06	07	08	09	10	11	12	13
Name or Item Tag	Qty	Design OA CFM	Supply Fan				Return / Relief Fan					Status[1]
			CFM	Power	Power Units	Control	Fan Type	CFM	Power	Power Units	Control	
AC-1	1	364.8	1,100	0.5	BHP	Constant Vol	N/A	N/A	N/A	N/A	N/A	N

[1] *Status: N - New, A - Altered, E - Existing*

H8. SYSTEM SPECIAL FEATURES

01	02	03	04
System Name	Equipment Type	Interlocks per 140.4(n)[1]	Other Special Features and Controls
AC-1	Single Package VHP Air System	No	Zone(s) With CO2 Sensor Vent. Control Fixed DB

Notes: This table includes controls related to the performance path only. For projects using the prescriptive path, mandatory and prescriptive controls requirements are documented on the NRCC-MCH-E.
[1] *Yes = interlocks are provided, No = interlocks are not provided, NA means no operable openings.*

H9. NONRESIDENTIAL / COMMON USE AREA & HOTEL/MOTEL VENTILATION

01	02	03	04	05	06	07
Zone Name	Mechanical Ventilation				Conditioned Area (sf)	DCV or Occupant Sensor Controls, or Both
	Ventilation Function	# of People	Supply OA CFM	Exhaust CFM		
1-Floor	Education - Classrooms (ages 9-18)	24	364.8	0	960	DCV

H11. ZONAL SYSTEM AND TERMINAL UNIT SUMMARY

01	02	03	04	05	06	07	08	09	10	11	12
System ID	System Type	Qty	Rated Capacity (kBtuh)		Airflow (cfm)			Fan			VSD
			Heating	Cooling	Design	Min.	Min. Ratio	Power	Power Units	Cycles	
1-First Floor-Trm	Uncontrolled	1	N/A	N/A	1,100	N/A	0	N/A	N/A	N/A	☐

K1. INDOOR CONDITIONED LIGHTING GENERAL INFO

01	02	03	04	05	06
Occupancy Type[1]	Conditioned Floor Area[2] (ft²)	Installed Lighting Power (Watts)	Lighting Control Credits (Watts)	Additional (Custom) Allowance	
				Area Category Footnotes (Watts)	Area Category Footnotes (Watts)
Classroom, Lecture, or Training Vocational	960	384	0	0	0
Building Totals:	**960**	**384**	**0**	**0**	**0**

[2]*See Table 140.6-C*
[2]*See NRCC-LTI-E for unconditioned spaces*
[3]*Lighting information for existing spaces modeled is not included in this table*

K2. INDOOR CONDITIONED LIGHTING SCHEDULE

Luminaire Schedule (includes all permanent installed lighting in conditioned space, and portable lighting over 0.3 w/ft² in offices)

01	02	03	04	05	06
Name or Item Tag	Complete Luminaire Description (i.e. 3-lamp fluorescent troffer, F32T8, one dimmable electronic ballast)	Installed Watts (Conditioned)			
		Watts per luminaire	How is Wattage determined	Total Number of Luminaires	Installed Watts
L-1	2x4 LED Panel	48	According to	8	384

[1]*If lighting power densities were used in the compliance model Building Departments will need to check prescriptive forms for Luminaire Schedule details.*

K3. INDOOR CONDITIONED LIGHTING CONTROL CREDITS

Lighting Control Credits Schedule (includes all lighting controls installed in conditioned space for compliance credit per 140.6(a)2 and Table 140.6-A)

01	02	03	04	05	06	07	08	09
Area Description	Primary Function Area (must meet requirements of Table 140.6-A and 170.2-L)	Type of Lighting Control	Power Adjustment Factor (PAF)	Luminaire Item Tag	Watts per Luminaire	# of Luminaires	Lighting Controlled (Watts)	Control Credit (Watts)
S-1-First Floor	Classroom, Lecture, or Training Vocational	N/A	N/A	L-1	48	8	384	0
						Lighting Control Credits (Conditioned) Total (Watts)		0

K4. INDOOR CONDITIONED LIGHTING MANDATORY LIGHTING CONTROL

Building Level Controls

01	02
Mandatory Demand Response 110.12(c)	Shut-Off Controls 130.1(c) & 160.5(b)4C
Required	Required

See NRCC-LTI-E for mandatory controls

L. DECLARATION OF REQUIRED CERTIFICATES OF INSTALLATION

Selections made by Documentation Author indicate which Certificates of Installation must be submitted for the features to be recognized for compliance. These documents must be retained and provided to the building inspector during construction and can be found online

Building Component	Form/Title
Envelope	NRCI-ENV-01-E - Must be submitted for all buildings
Envelope	NRCI-ENV-E - Envelope (for all buildings)
Mechanical	NRCI-MCH-01-E - Must be submitted for all buildings
Mechanical	NRCI-MCH-E - For all buildings with Mechanical Systems
Indoor Lighting	NRCI-LTI-01-E - Must be submitted for all buildings
Indoor Lighting	NRCI-LTI-E - Indoor Lighting (for all buildings)

M. DECLARATION OF REQUIRED CERTIFICATES OF ACCEPTANCE

Selections made by Documentation Author indicate which Certificates of Acceptance must be submitted for the features to be recognized for compliance. These documents must be provided to the building inspector during construction and must be completed through an Acceptance Test Technician Certification Provider (ATTCP).

Building Component	Form/Title
Envelope	NRCA-ENV-02-F - NRFC label verification for fenestration
Indoor Lighting	NRCA-LTI-02-A - Occupancy Sensors and Automatic Time Switch Controls.
Mechanical	NRCA-MCH-02-A - Outdoor Air must be submitted for all newly installed HVAC units. Note: MCH-02-A can be performed in conjunction with MCH-07-A 5ugply Fan VFD Acceptance (if applicable) since testing activities overlap
Mechanical	NRCA-MCH-05-A - Air Economizer Controls
Mechanical	NRCA-MCH-06-A Demand Control Ventilation Systems must be submitted for all systems required to employ demand controlled ventilation (refer to) can vary outside ventilation flow rates based on maintaining interior carbon dioxide (CO2) concentration setpoints.

N. DECLARATION OF REQUIRED CERTIFICATES OF VERIFICATION

Selections made by Documentation Author indicate which Certificates of Verification must be submitted for the features to be recognized for compliance. These documents must be retained and provided to the building inspector during construction and can be found online

There are no Certificates of Verification applicable to this project

Documentation Author's Declaration Statement

1. I certify that this Certificate of Compliance documentation is accurate and complete.

Documentation Author Name: LAL B. SAHGAL	Documentation Author Signature:
Company: LSA CONSULTING ENGINEERS	Signature Date:
Address: 83, WINDSWEPT WAY	CEA/HERS Certification Identification (if applicable): M26885
City/State/Zip: MISSION VIEJO, CA 92692	Phone: (949) 830-4746

Responsible Person's Declaration statement

I certify the following under penalty of perjury, under the laws of the State of California:

1. The information provided on this Certificate of Compliance is true and correct.
2. I am eligible under Division 3 of the Business and Professions Code to accept responsibility for the building design or system design identified on this Certificate of Compliance (responsible designer)
3. The energy features and performance specifications, materials, components, and manufactured devices for the building design or system design identified on this Certificate of Compliance conform to the requirements of Title 24, Part 1 and Part 6 of the California Code of Regulations.
4. The building design features or system design features identified on this Certificate of Compliance are consistent with the information provided on other applicable compliance documents, worksheets, calculations, plans and specifications submitted to the enforcement agency for approval with this building permit application.
5. I understand that a registered copy of this Certificate of Compliance shall be made available with the building permit(s) issued for the building, and made available to the enforcement agency for all applicable inspections, and I will take the necessary steps to accomplish this requirement.
6. I understand that a registered copy of this Certificate of Compliance is required to be included with the documentation the builder provides to the building owner at occupancy, and I will take the necessary steps to accomplish these requirements.

Responsible Designer Name:	Responsible Designer Signature:	
Company: R & S Tavares Associates		
Address: 11590 W. Bernardo Court, Suite 100	Date Signed:	
City/State/Zip: San Diego, Ca. 92127	License #:	
Phone:	Title:	Scope:
Responsible Designer Name:	Responsible Designer Signature:	
Company: R & S Tavares Associates		
Address: 11590 W. Bernardo Court, Suite 100	Date Signed:	
City/State/Zip: San Diego, Ca. 92127	License #:	
Phone:	Title:	Scope:

Responsible Designer Name: Lal Sahgal	Responsible Designer Signature:
Company: LSA Consulting Engineers	
Address: 83, Windswept Way	Date Signed:
City/State/Zip: Mission Viejo, Ca. 92692	License #: M26885
Phone:	Title: Scope:

HVAC SYSTEM HEATING AND COOLING LOADS SUMMARY

Project Name: 24X40 (PC 04-121369) - Wall AC	Date: 7/26/2023
System Name: AC-1	Floor Area: 960

ENGINEERING CHECKS		SYSTEM LOAD	COIL COOLING PEAK			COIL HTG. PEAK	
			CFM	Sensible	Latent	CFM	Sensible
Number of Systems	1						
Heating System							
Output per System	33,000	**Total Room Loads**	2,054	28,927	9,600	230	11,785
Total Output (Btuh)	33,000	**Return Vented Lighting**		0			
Output (Btuh/sqft)	34.4	**Return Air Ducts**		1,446			589
Cooling System		**Return Fan**		0			0
Output per System	36,000	**Ventilation**	365	9,547	-5,338	365	20,216
Total Output (Btuh)	36,000	**Supply Fan**		1,535			-1,535
Total Output (Tons)	3.0	**Supply Air Ducts**		1,446			589
Total Output (Btuh/sqft)	37.5						
Total Output (sqft/Ton)	320.0	**TOTAL SYSTEM LOAD**		42,901	4,262		31,644
Air System							
CFM per System	1,100	**HVAC EQUIPMENT SELECTION**					
Airflow (cfm)	1,100	Bard W36HB		29,467	4,973		13,777
Airflow (cfm/sqft)	1.15	HP Supplemental Coil					13,648
Airflow (cfm/Ton)	366.7						
Outside Air (%)	33.2%	**Total Adjusted System Output** (Adjusted for Peak Design conditions)		29,467	4,973		27,425
Outside Air (cfm/sqft)	0.38						
Note: values above given at ARI conditions		**TIME OF SYSTEM PEAK**		Jul 3 PM			Jan 1 AM

HEATING SYSTEM PSYCHROMETRICS (Airstream Temperatures at Time of Heating Peak)

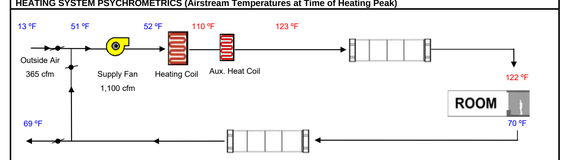

COOLING SYSTEM PSYCHROMETRICS (Airstream Temperatures at Time of Cooling Peak)

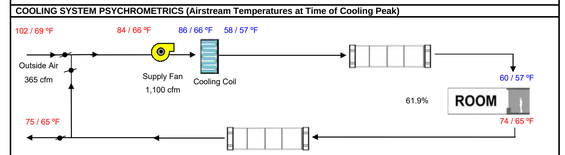

PROJECT SPECIFIC STATE AGENCY APPROVAL

IDENTIFICATION STAMP
DIV. OF THE STATE ARCHITECT
APP: 02-123433 INC:
REVIEWED FOR
SS ☑ FLS ☑ ACS ☑
DATE: 01/20/2026

R&S TAVARES ASSOCIATES
DESIGN ♦ CONSULTING ♦ PROJECT MGT
11590 W Bernardo Court, Suite 100
San Diego, CA 92127
www.rstavares.com

PROFESSIONAL STAMP

REGISTERED PROFESSIONAL ENGINEER
MANNY D. FRANCISCO
No. S3380
Exp. 03/31/24
STRUCTURAL
STATE OF CALIFORNIA
02/16/24
RS T#22088

THE PLANS, IDEAS & DESIGNS SHOWN ON THESE DRAWINGS ARE THE PROPERTY OF R&S TAVARES ASSOCIATES, INC. DEVISED SOLELY FOR THIS CONTRACT. THESE PLANS SHALL NOT BE USED, IN WHOLE OR IN PART, FOR ANY PURPOSE FOR WHICH THEY WERE NOT INTENDED WITHOUT THE EXPRESS WRITTEN CONSENT OF R&S TAVARES ASSOCIATES, INC. ©

CLIENT

Class Leasing
1651Juanita Street, San Jacinto, CA 92583
Voice (951) 943-1908 Fax (951)943-5768

ORIGINAL PC STATE AGENCY APPROVAL

APPROVED
DIV. OF THE STATE ARCHITECT
APP: 04-123059 PC
REVIEWED FOR
SS ☑ FLS ☑ ACS ☑ CG ☑
DATE: 02/20/2024

Revision Schedule

#	Description	Date

PRE-CHECK (PC) DOCUMENT

CODE: 2019 CBC

A separate project application for construction is required

PROJECT TITLE
PC 2022 CBC: 24' x 40' EXPANDABLE TO 120' x 40'

SHEET TITLE
24'x40' T24 CZ 14 (WALL AC)

PROJECT NUMBER: 22088
DRAWN BY: rMc/SC
CHECKED BY: RH/RT
DATE: 06/15/2021
SHEET NO. M2.10
SHEET OF

9/7/2023 11:16:14 AM C:\Users\User\Documents\22088- Aries, 24x40 PC - MainFile - Low Seismic_detached (2022)_CES4R24D63.rvt

BUILDING ENERGY ANALYSIS REPORT

PROJECT:
24X40 (PC 04-121369) - Wall AC
Climate Zone 15
Palm Springs, CA

Project Designer:
R & S Tavares Associates
11590 W. Bernardo Court, Suite 100
San Diego, Ca. 92127

Report Prepared by:
LAL B. SAHGAL
LSA CONSULTING ENGINEERS
83, WINDSWEPT WAY
MISSION VIEJO, CA 92692
(949) 830-4746

Job Number:

Date:
7/26/2023

The EnergyPro computer program has been used to perform the calculations summarized in this compliance report. This program has approval and is authorized by the California Energy Commission for use with both the Residential and Nonresidential 2022 Building Energy Efficiency Standards.

This program developed by EnergySoft, LLC – www.energysoft.com.

TABLE OF CONTENTS

Cover Page	1
Table of Contents	2
Form NRCC/LMCC-PRF-E Certificate of Compliance	3
HVAC System Heating and Cooling Loads Summary	20

Project Name:	24X40 (PC 04-121369) - Wall AC	**Date Prepared:**	2023-07-25

A. General Information

1	Project Name	24X40 (PC 04-121369) - Wall AC			
2	Run Title	Title 24 Analysis			
3	Project Location	Climate Zone 15			
4	City	Palm Springs	5	Standards Version	Compliance 2022
6	Zip code	99999	7	Compliance Software (version)	EnergyPro 9.1
8	Climate Zone	15	9	Building Orientation (deg)	75
10	Building Type(s)	• Nonresidential	11	Weather File	PALM-SPRINGS_STYP20.epw
12	Project Scope	• New complete scope	13	Number of Dwelling Units	0
14	Total Conditioned Floor Area in Scope (ft^2)	960	15	Total # of hotel/motel rooms	0
16	Total Unconditioned Floor Area (ft^2)	0	17	Fuel Type	Natural gas
18	Nonresidential Conditioned Floor Area	960	19	Total # of Stories (Habitable Above Grade)	1
20	Residential Conditioned Floor Area	0			

B. PROJECT SUMMARY

Table B shows which building components are included in the performance calculation. If indicated as not included, the project must show compliance prescriptively if within the permit application.

Building Components Complying via Performance

Envelope (See Table G)	Nonres	Performance	Solar Thermal Water Heating (See Table I3)	☐	Performance
	MultiFam	Not Included		☒	Not Included
Mechanical (See Table H)	Nonres	Performance	Covered Process: Commercial Kitchens (see Table J)	☐	Performance
	MultiFam	Not Included		☒	Not Included
Domestic Hot Water (See Table I)	Nonres	Not Included	Covered Process: Laboratory Exhaust (see Table J)	☐	Performance
	MultiFam	Not Included		☒	Not Included
Lighting (Indoor Conditioned, see Table K)	Nonres	Performance	Photovoltaics (see Table F)	☐	Performance
	MultiFam	Not Included		☒	Not Included
			Battery (see Table F)	☐	Performance
				☒	Not Included

Building Components Complying Prescriptively

The following building components are ONLY eligible for prescriptive compliance and should be documented on the NRCC form listed if within the scope of the permit application (i.e. compliance will not be shown on the NRCC-PRF-E).	
Indoor Lighting (Unconditioned) 140.6 & 170.2(e)	NRCC-LTI-E is required
Outdoor Lighting 140.7 & 170.2(e)	NRCC-LTO-E is required
Sign Lighting 140.8 & 170.2(e)	NRCC-LTS-E is required

Building Components Complying with Mandatory Measures

Electrical power systems, commissioning, solar ready, elevator and escalator requirements are mandatory and should be documented on the NRCC form listed if applicable (i.e. compliance will not be shown on the NRCC-PRF-E.)	
Electrical Power Distribution 110.11	NRCC-ELC-E is required
Commissioning 120.8	NRCC-CXR-E is required
Solar and Battery 110.10	NRCC-SAB-E is required

C1. COMPLIANCE SUMMARY

COMPLIES[3]

	Time Dependent Valuaton (TDV)		Source Energy Use
	Efficiency[1] (kBtu/ft² - yr)	Total[2] (kBtu/ft² - yr)	Total[2] (kBtu/ft² - yr)
Standard Design	369.92	369.92	27.65
Proposed Design	301.78	301.78	21.62
Compliance Margins	**68.14**	**68.14**	**6.03**
	Pass	**Pass**	**Pass**

[1] Efficiency measures include improvements like a better building envelope and more efficient equipment
[2] Compliance Totals include efficiency, photovoltaics and batteries
[3] Building complies when efficiency and total compliance margins are greater than or equal to zero and unmet load hour limits are not exceeded

C2. TDV ENERGY COMPLIANCE RESULTS FOR PERFORMANCE COMPONENTS (Annual TDV Energy Use, kBtu/ft² - yr)

COMPLIES[2]

Energy Component	Standard Design (TDV)	Proposed Design (TDV)	Compliance Margin (TDV)[1]
Space Heating	5.43	9.65	-4.22
Space Cooling	152.4	156.74	-4.34
Indoor Fans	140.88	74.91	65.97
Heat Rejection	0	0	0
Pumps & Misc.	0	0	0
Domestic Hot Water	38.99	39	-0.01
Indoor Lighting	32.22	21.48	10.74
Flexibility	---	---	---
EFFICIENCY COMPLIANCE TOTAL	**369.92**	**301.78**	**68.14 (18.4%)**
Photovoltaics	---	---	---
Batteries	---	---	---
TOTAL COMPLIANCE	**369.92**	**301.78**	**68.14 (18.4%)**

[1] Notes: This number in parenthesis following the Compliance Margin in column 4, represents the Percent Better than Standard.

C3. TDV ENERGY RESULTS FOR NON-REGULATED COMPONENTS[1]

Non-Regulated Energy Component	Standard Design (TDV)	Proposed Design (TDV)	Compliance Margin (TDV)[1]
Receptacle	66.69	66.69	---
Process	---	---	---
Other Ltg	---	---	---
Process Motors	---	---	---
TOTAL (TOTAL COMPLIANCE + NON-REGULATED COMPONENTS)	**436.61**	**368.47**	**68.14 (15.6%)**

[1] Notes: This table is not used for Energy Code Compliance.

C4. SOURCE ENERGY COMPLIANCE RESULTS FOR PERFORMANCE COMPONENTS (Annual SOURCE Energy Use, kBtu/ft² /yr)

COMPLIES[2]

Energy Component	Standard Design (SOURCE)	Proposed Design (SOURCE)	Compliance Margin (SOURCE)[1]
Space Heating	0.73	1.33	-0.6
Space Cooling	7.45	7.45	0
Indoor Fans	12.67	6.9	5.77
Heat Rejection	0	0	0
Pumps & Misc.	0	0	0
Domestic Hot Water	4.23	4.23	0
Indoor Lighting	2.57	1.71	0.86
Flexibility	---	---	---
EFFICIENCY COMPLIANCE TOTAL	**27.65**	**21.62**	**6.03 (21.8%)**
Photovoltaics	---	---	---
Batteries	---	---	---
TOTAL COMPLIANCE	**27.65**	**21.62**	**6.03 (21.8%)**

[1] Notes: This number in parenthesis following the Compliance Margin in column 4, represents the Percent Better than Standard.

C5. SOURCE ENERGY RESULTS FOR NON-REGULATED COMPONENTS[1]

Non-Regulated Energy Component	Standard Design (SOURCE)	Proposed Design (SOURCE)	Compliance Margin (SOURCE)[1]
Receptacle	4.92	4.92	---
Process	---	---	---
Other Ltg	---	---	---
Process Motors	---	---	---
TOTAL (TOTAL COMPLIANCE + NON-REGULATED COMPONENTS)	**32.57**	**26.54**	**6.03 (18.5%)**

[1] Notes: This table is not used for Energy Code Compliance.

C6. 'ABOVE CODE' QUALIFICATIONS

☐ This project is pursuing CalGreen Tier 1 ☐ This project is pursuing CalGreen Tier 2

C7. ENERGY USE SUMMARY

Energy Component	Standard Design Site (MWh)	Proposed Design Site (MWh)	Margin (MWh)	Standard Design Site (MBtu)	Proposed Design Site (MBtu)	Margin (MBtu)
Space Heating	0.1	0.3	-0.2	---	---	---
Space Cooling	4.5	4.5	0	---	---	---
Indoor Fans	4.8	2.5	2.3	---	---	---
Heat Rejection	---	---	---	---	---	---
Pumps & Misc.	---	---	---	---	---	---
Domestic Hot Water	1.5	1.5	0	---	---	---
Indoor Lighting	1.2	0.8	0.4	---	---	---
Flexibility	---	---	---	---	---	---
EFFICIENCY TOTAL	**12.1**	**9.6**	**2.5**	**0**	**0**	**0**
Photovoltaics	---	---	---	---	---	---
Batteries	---	---	---	---	---	---
ENERGY USE SUBTOTAL	**12.1**	**9.6**	**2.5**	**0**	**0**	**0**
Receptacle	2.5	2.5	0	---	---	---
Process	---	---	---	---	---	---
Other Ltg	---	---	---	---	---	---
Process Motors	---	---	---	---	---	---
ENERGY USE TOTAL	**14.6**	**12.1**	**2.5**	**0**	**0**	**0**

PROJECT SPECIFIC STATE AGENCY APPROVAL

IDENTIFICATION STAMP
DIV. OF THE STATE ARCHITECT
APP: 02-123433 INC:
REVIEWED FOR
SS ☑ FLS ☑ ACS ☑
DATE: 01/20/2026

R&S TAVARES ASSOCIATES
DESIGN ♦ CONSULTING ♦ PROJECT MGT
11590 W. Bernardo Court, Suite 100
San Diego, CA 92127
Phone: (858) 444-3344
www.rstavares.com

PROFESSIONAL STAMP

REGISTERED PROFESSIONAL ENGINEER
MANMAY D. PATCHER
No. S3380
Exp. 03/31/24
STRUCTURAL
STATE OF CALIFORNIA
RS T#22088
02/16/24

THE PLANS, IDEAS & DESIGNS SHOWN ON THESE DRAWINGS ARE THE PROPERTY OF R&S TAVARES ASSOCIATES, INC. DEVISED SOLELY FOR THIS CONTRACT. THESE PLANS SHALL NOT BE USED, IN WHOLE OR IN PART, FOR ANY PURPOSE FOR WHICH THEY WERE NOT INTENDED WITHOUT THE EXPRESS WRITTEN CONSENT OF R&S TAVARES ASSOCIATES, INC. ©

CLIENT

Class Leasing
1651Juanita Street, San Jacinto, CA 92583
Voice (951) 943-1908 Fax (951)943-5768

ORIGINAL PC STATE AGENCY APPROVAL

APPROVED
DIV. OF THE STATE ARCHITECT
APP: 04-123059 PC
REVIEWED FOR
SS ☑ FLS ☑ ACS ☑ CG ☑
DATE: 02/20/2024

Revision Schedule

#	Description	Date

PROJECT TITLE
PC 2022 CBC: 24' x 40' EXPANDABLE TO 120' x 40'

SHEET TITLE
24'x40' T24 CZ 15 (WALL AC)

PROJECT NUMBER
22088

DRAWN BY
rMc/CG

CHECKED BY
RH/RT

DATE
06/15/2021

SHEET NO.
M2.11

SHEET OF

9/7/2023 11:16:15 AM C:\Users\User\Documents\22088- Aries, 24x40 PC - MainFile - Low Seismic_detached (2022)_CES\AR24D63.rvt

CERTIFICATE OF COMPLIANCE - NONRESIDENTIAL PERFORMANCE COMPLIANCE METHOD NRCC-PRF-E

Nonresidential Performance Compliance Method (Page 9 of 17)

C8. ENERGY USE INTENSITY (EUI)

	Standard Design (kBtu/ft² / yr)	Proposed Design (kBtu/ft² / yr)	Margin (kBtu/ft² / yr)	Margin Percentage
GROSS EUI[1]	51.89	43.01	8.88	17.11
NET EUI[1]	51.89	43.01	8.88	17.11

[1] *Notes: Gross EUI is Energy Use Total (not including PV)/Total Building Area. Net EUI is Energy Use Total (including PV)/Total Building Area.*

D1. EXCEPTIONAL CONDITIONS

- The project uses the Simplified Geometry Performance Modeling Approach which is not capable of modeling daylighting controls and assumes the prescriptive Secondary Daylit Control requirements are met. PRESCRIPTIVE COMPLIANCE documentation (form NRCC-LTI-02-E) for the requirements of section 140.6(d) Automatic Daylighting Controls in Secondary Daylit Zones is required.
- The building does not include service water heating. Verify that service water heating is not required and is not included in the design.
- Project is claiming Exception 2 to Section 140.10(a): No PV system is required where the required PV system size is less than 4 kWdc.

G1. ENVELOPE GENERAL INFORMATION (conditioned spaces only)

01	02	03	04
Opaque Surfaces & Orientation	**Total Gross Surface Area (ft²)**	**Total Fenestration Area (ft²)**	**Window to Wall Ratio (%)**
North-Facing[1]	240	32	13.33
East-Facing[2]	400	0	0
South-Facing[3]	240	32	13.33
West-Facing[4]	400	0	0
Total	**1280**	**64**	**5**
Roof	960	14	1.46

Notes
[1]*North-Facing is oriented to within 45 degrees of true north, including 45 00'00" east of north (NE), but excluding 45 00'00" west of north (NW),*
[2]*East-Facing is oriented to within 45 degrees of true east, including 45 00'00" south of east (SE), but excluding 45 00'00" north of east (NE),*
[3]*South-Facing is oriented to within 45 degrees of true south, including 45 00'00" west of south (SW), but excluding 45 00'00" east of south (SE),*
[4]*West-Facing is oriented to within 45 degrees of true west, including 45 00'00" north of west (NW), but excluding 45 00'00" south of west (SW),*

CERTIFICATE OF COMPLIANCE - NONRESIDENTIAL PERFORMANCE COMPLIANCE METHOD NRCC-PRF-E

Nonresidential Performance Compliance Method (Page 10 of 17)

G4. NONRESIDENTIAL AIR BARRIER

01	02
Building Story Name	**Air Barrier**
Com-Floor 1	No air barrier

G5. OPAQUE SURFACE ASSEMBLY SUMMARY

01	02	03	04	05	06		07	08	09	10
Surface Name	**Construction Type**	**Area (ft²)**	**Framing Type**	**Cavity R-Value**	**Continuous R-Value**		**Units**	**Value**	**Description of Assembly Layers**	**Status[1]**
					Interior	**Exterior**				
R-19 Wood Framed Wall7	Exterior Wall	1,280	Wood	19	N/A	N/A	U-factor	0.0605	Wood siding - 1/2 in. Vapor permeable felt - 1/8 in. Composite-1 Gypsum Board - 1/2 in. Softwood - 1.5 in.	N
R-19 Metal Floor Crawlspa14	Exterior Floor	960	Metal	19	N/A	N/A	U-factor	0.0588	Vented Crawl Space Composite-2 Plywood - 1/2 in. Carpet - 3/4 in.	N
Standing Seam R-38 Metal16	Roof	960	N/A	36	N/A	N/A	U-factor	0.06	Metal Standing Seam - 1/16 in. Composite-3	N

[1] *Status: N - New, A - Altered, E - Existing*

CERTIFICATE OF COMPLIANCE - NONRESIDENTIAL PERFORMANCE COMPLIANCE METHOD NRCC-PRF-E

Nonresidential Performance Compliance Method (Page 11 of 17)

G7A. FENESTRATION ASSEMBLY SUMMARY (NONRESIDENTIAL)

01	02	03	04	05	06	07	08	09
Fenestration Assembly Name	**Fenestration Type/ Product Type / Frame Type**	**Certification Method[1]**	**Assembly Method**	**Area (ft²)**	**Overall U-factor**	**Overall SHGC**	**Overall VT**	**Status[2]**
Sierra Pacific Windows	Vertical fenestration Operable window N/A	NFRC	Manufactured	64	0.35	0.24	0.5	N
Sola tube	Skylight Fixed window N/A	NFRC	Manufactured	14	0.39	0.37	0.65	N

[1] *Notes: Newly installed fenestration shall have a certified NFRC Label Certificate or use the CEC default tables found in Table 110.6-A and Table 110.6-B. Center of Glass (COG) values are for the glass-only, determined by the manufacturer, and are shown for ease of verification. Site-built fenestration values are calculated per Nonresidential Appendix NA6 and are used in the analysis.*
[2] *Status: N - New, A - Altered, E - Existing*

H1. DRY SYSTEM EQUIPMENT (FURNACES, AIR HANDLING UNITS, HEAT PUMPS, VRF, ECONOMIZERS ETC.)

01	02	03	04	05	06	07	08	09	10	11	12
Equipment Name	**Equipment Type**	**Qty**	**Heating**				**Cooling**			**Economizer Type (if present)**	**Status[1]**
			Total Heating Output (kBtu/h)	**Supp Heat Output (kBtu/h)**	**Efficiency Unit**	**Efficiency**	**Total Cooling Output (kBtu/h)**	**Efficiency Unit**	**Efficiency**		
AC-1	Single Package VHP Air System	1	34.37	13.65	COP	3.3	34.56	EER	11	Fixed DB	N

[1] *Status: N - New, A - Altered, E - Existing*

CERTIFICATE OF COMPLIANCE - NONRESIDENTIAL PERFORMANCE COMPLIANCE METHOD NRCC-PRF-E

Nonresidential Performance Compliance Method (Page 12 of 17)

H3. NONRESIDENTIAL / COMMON USE AREA FAN SYSTEMS SUMMARY

01	02	03	04	05	06	07	08	09	10	11	12	13
Name or Item Tag	**Qty**	**Design OA CFM**	**Supply Fan**				**Return / Relief Fan**					**Status[1]**
			CFM	**Power**	**Power Units**	**Control**	**Fan Type**	**CFM**	**Power**	**Power Units**	**Control**	
AC-1	1	364.8	1,100	0.5	BHP	Constant Vol	N/A	N/A	N/A	N/A	N/A	N

[1] *Status: N - New, A - Altered, E - Existing*

H8. SYSTEM SPECIAL FEATURES

01	02	03	04
System Name	**Equipment Type**	**Interlocks per 140.4(n)[1]**	**Other Special Features and Controls**
AC-1	Single Package VHP Air System	No	Zone(s) With CO2 Sensor Vent. Control Fixed DB

Notes: This table includes controls related to the performance path only. For projects using the prescriptive path, mandatory and prescriptive controls requirements are documented on the NRCC-MCH-E.
[1] *Yes = interlocks are provided, No = interlocks are not provided, NA means no operable openings.*

H9. NONRESIDENTIAL / COMMON USE AREA & HOTEL/MOTEL VENTILATION

01	02	03	04	05	06	07
Zone Name	**Mechanical Ventilation**				**Conditioned Area (sf)**	**DCV or Occupant Sensor Controls, or Both**
	Ventilation Function	**# of People**	**Supply OA CFM**	**Exhaust CFM**		
1-First Floor	Education - Classrooms (ages 9-18)	24	364.8	0	960	DCV

CERTIFICATE OF COMPLIANCE - NONRESIDENTIAL PERFORMANCE COMPLIANCE METHOD NRCC-PRF-E

Nonresidential Performance Compliance Method (Page 13 of 17)

H11. ZONAL SYSTEM AND TERMINAL UNIT SUMMARY

01	02	03	04	05	06	07	08	09	10	11	12
System ID	**System Type**	**Qty**	**Rated Capacity (kBtuh)**		**Airflow (cfm)**			**Fan**			**VSD**
			Heating	**Cooling**	**Design**	**Min.**	**Min. Ratio**	**Power**	**Power Units**	**Cycles**	
1-First Floor-Trm	Uncontrolled	1	N/A	N/A	1,100	N/A	0	N/A	N/A	N/A	☐

K1. INDOOR CONDITIONED LIGHTING GENERAL INFO

01	02	03	04	05	06
Occupancy Type[1]	**Conditioned Floor Area[2] (ft²)**	**Installed Lighting Power (Watts)**	**Lighting Control Credits (Watts)**	**Additional (Custom) Allowance**	
				Area Category Footnotes (Watts)	**Area Category Footnotes (Watts)**
Classroom, Lecture, or Training Vocational	960	384	0	0	0
Building Totals:	**960**	**384**	**0**	**0**	**0**

[1]*See Table 140.6-C*
[2]*See NRCC-LTI-E for unconditioned spaces*
[3]*Lighting information for existing spaces modeled is not included in this table*

CERTIFICATE OF COMPLIANCE - NONRESIDENTIAL PERFORMANCE COMPLIANCE METHOD NRCC-PRF-E

Nonresidential Performance Compliance Method (Page 14 of 17)

K2. INDOOR CONDITIONED LIGHTING SCHEDULE

Luminaire Schedule (includes all permanent installed lighting in conditioned space, and portable lighting over 0.3 w/ft² in offices)

01	02	03	04	05	06
Name or Item Tag	**Complete Luminaire Description (i.e. 3-lamp fluorescent troffer, F32T8, one dimmable electronic ballast)**	**Installed Watts (Conditioned)**			
		Watts per luminaire	**How is Wattage determined**	**Total Number of Luminaires**	**Installed Watts**
L-1	2x4 LED Panel	48	According to	8	384

[1]*If lighting power densities were used in the compliance model Building Departments will need to check prescriptive forms for Luminaire Schedule details.*

K3. INDOOR CONDITIONED LIGHTING CONTROL CREDITS

Lighting Control Credits Schedule (includes all lighting controls installed in conditioned space for compliance credit per 140.6(a)2 and Table 140.6-A)

01	02	03	04	05	06	07	08	09
Area Description	**Primary Function Area (must meet requirements of Table 140.6-A and 170.2-L)**	**Type of Lighting Control**	**Power Adjustment Factor (PAF)**	**Luminaire Item Tag**	**Watts per Luminaire**	**# of Luminaires**	**Lighting Controlled (Watts)**	**Control Credit (Watts)**
S-1-First Floor	Classroom, Lecture, or Training Vocational	N/A	N/A	L-1	48	8	384	0
						Lighting Control Credits (Conditioned) Total (Watts)		**0**

K4. INDOOR CONDITIONED LIGHTING MANDATORY LIGHTING CONTROL

Building Level Controls

01	02
Mandatory Demand Response 110.12(c)	**Shut-Off Controls 130.1(c) & 160.5(b)4C**
Required	**Required**

See NRCC-LTI-E for mandatory controls

CERTIFICATE OF COMPLIANCE - NONRESIDENTIAL PERFORMANCE COMPLIANCE METHOD NRCC-PRF-E

Nonresidential Performance Compliance Method (Page 15 of 17)

L. DECLARATION OF REQUIRED CERTIFICATES OF INSTALLATION

Selections made by Documentation Author indicate which Certificates of Installation must be submitted for the features to be recognized for compliance. These documents must be retained and provided to the building inspector during construction and can be found online

Building Component	Form/Title
Envelope	NRCI-ENV-01-E - Must be submitted for all buildings
Envelope	NRCI-ENV-E - Envelope (for all buildings)
Mechanical	NRCI-MCH-01-E - Must be submitted for all buildings
Mechanical	NRCI-MCH-E - For all buildings with Mechanical Systems
Indoor Lighting	NRCI-LTI-01-E - Must be submitted for all buildings
Indoor Lighting	NRCI-LTI-E - Indoor Lighting (for all buildings)

M. DECLARATION OF REQUIRED CERTIFICATES OF ACCEPTANCE

Selections made by Documentation Author indicate which Certificates of Acceptance must be submitted for the features to be recognized for compliance. These documents must be provided to the building inspector during construction and must be completed through an Acceptance Test Technician Certification Provider (ATTCP).

Building Component	Form/Title
Envelope	NRCA-ENV-02-F - NRFC label verification for fenestration
Indoor Lighting	NRCA-LTI-02-A - Occupancy Sensors and Automatic Time Switch Controls.
Mechanical	NRCA-MCH-02-A - Outdoor Air must be submitted for all newly installed HVAC units. Note: MCH-02-A can be performed in conjunction with MCH-07-A Supply Fan VFD Acceptance (if applicable) since testing activities overlap
Mechanical	NRCA-MCH-05-A - Air Economizer Controls
Mechanical	NRCA-MCH-06-A Demand Control Ventilation Systems must be submitted for all systems required to employ demand controlled ventilation (refer to) can vary outside ventilation flow rates based on maintaining interior carbon dioxide (CO2) concentration setpoints.

N. DECLARATION OF REQUIRED CERTIFICATES OF VERIFICATION

Selections made by Documentation Author indicate which Certificates of Verification must be submitted for the features to be recognized for compliance. These documents must be retained and provided to the building inspector during construction and can be found online

There are no Certificates of Verification applicable to this project

CERTIFICATE OF COMPLIANCE - NONRESIDENTIAL PERFORMANCE COMPLIANCE METHOD NRCC-PRF-E

Nonresidential Performance Compliance Method (Page 16 of 17)

Documentation Author's Declaration Statement

1. I certify that this Certificate of Compliance documentation is accurate and complete.

Documentation Author Name: LAL B. SAHGAL	Documentation Author Signature:
Company: LSA CONSULTING ENGINEERS	Signature Date:
Address: 83, WINDSWEPT WAY	CEA/HERS Certification Identification (if applicable): M26885
City/State/Zip: MISSION VIEJO, CA 92692	Phone: (949) 830-4746

Responsible Person's Declaration statement

I certify the following under penalty of perjury, under the laws of the State of California:

1. The information provided on this Certificate of Compliance is true and correct.
2. I am eligible under Division 3 of the Business and Professions Code to accept responsibility for the building design or system design identified on this Certificate of Compliance (responsible designer)
3. The energy features and performance specifications, materials, components, and manufactured devices for the building design or system design identified on this Certificate of Compliance conform to the requirements of Title 24, Part 1 and Part 6 of the California Code of Regulations.
4. The building design features or system design features identified on this Certificate of Compliance are consistent with the information provided on other applicable compliance documents, worksheets, calculations, plans and specifications submitted to the enforcement agency for approval with this building permit application.
5. I understand that a registered copy of this Certificate of Compliance shall be made available with the building permit(s) issued for the building, and made available to the enforcement agency for all applicable inspections, and I will take the necessary steps to accomplish this requirement.
6. I understand that a registered copy of this Certificate of Compliance is required to be included with the documentation the builder provides to the building owner at occupancy, and I will take the necessary steps to accomplish these requirements.

Responsible Designer Name:	Responsible Designer Signature:	
Company: R & S Tavares Associates		
Address: 11590 W. Bernardo Court, Suite 100	Date Signed:	
City/State/Zip: San Diego, Ca. 92127	License #:	
Phone:	Title:	Scope:
Responsible Designer Name:	Responsible Designer Signature:	
Company: R & S Tavares Associates		
Address: 11590 W. Bernardo Court, Suite 100	Date Signed:	
City/State/Zip: San Diego, Ca. 92127	License #:	
Phone:	Title:	Scope:

CERTIFICATE OF COMPLIANCE - NONRESIDENTIAL PERFORMANCE COMPLIANCE METHOD NRCC-PRF-E

Nonresidential Performance Compliance Method (Page 17 of 17)

Responsible Designer Name: Lal Sahgal	Responsible Designer Signature:	
Company: LSA Consulting Engineers		
Address: 83, Windswept Way	Date Signed:	
City/State/Zip: Mission Viejo, Ca. 92692	License #: M26885	
Phone:	Title:	Scope:

HVAC SYSTEM HEATING AND COOLING LOADS SUMMARY

Project Name: 24X40 (PC 04-121369) - Wall AC	Date: 7/26/2023
System Name: AC-1	Floor Area: 960

ENGINEERING CHECKS		SYSTEM LOAD	COIL COOLING PEAK			COIL HTG. PEAK	
Number of Systems	1		**CFM**	**Sensible**	**Latent**	**CFM**	**Sensible**
Heating System		**Total Room Loads**	1,653	31,075	9,600	167	9,097
Output per System	33,000	**Return Vented Lighting**		0			
Total Output (Btuh)	33,000	**Return Air Ducts**		1,554			455
Output (Btuh/sqft)	34.4	**Return Fan**		0			0
Cooling System		**Ventilation**	365	14,619	-1,514	365	16,924
Output per System	36,000	**Supply Fan**		1,535			-1,535
Total Output (Btuh)	36,000	**Supply Air Ducts**		1,554			455
Total Output (Tons)	3.0						
Total Output (Btuh/sqft)	37.5						
Total Output (sqft/Ton)	320.0	**TOTAL SYSTEM LOAD**		50,337	8,086		25,396
Air System							
CFM per System	1,100	**HVAC EQUIPMENT SELECTION**					
Airflow (cfm)	1,100	Bard W36HB		26,824	9,056		20,611
Airflow (cfm/sqft)	1.15	HP Supplemental Coil					13,648
Airflow (cfm/Ton)	366.7						
Outside Air (%)	33.2%	**Total Adjusted System Output** (Adjusted for Peak Design conditions)		26,824	9,056		34,259
Outside Air (cfm/sqft)	0.38						
Note: values above given at ARI conditions		**TIME OF SYSTEM PEAK**		Jul 3 PM			Jan 1 AM

HEATING SYSTEM PSYCHROMETRICS (Airstream Temperatures at Time of Heating Peak)

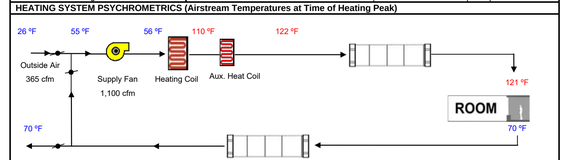

COOLING SYSTEM PSYCHROMETRICS (Airstream Temperatures at Time of Cooling Peak)

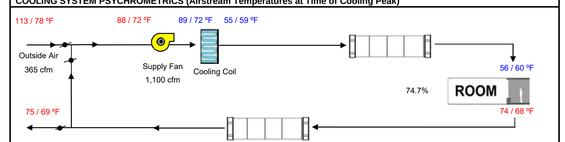

PROJECT SPECIFIC STATE AGENCY APPROVAL

IDENTIFICATION STAMP
DIV. OF THE STATE ARCHITECT
APP: 02-123433 INC:
REVIEWED FOR
SS ☑ FLS ☑ ACS ☑
DATE: 01/20/2026

R&S TAVARES ASSOCIATES
DESIGN ★ CONSULTING ★ PROJECT MGT
11590 W. Bernardo Court, Suite 100
San Diego, CA 92127
Phone: (858) 444-3344
www.rstavares.com

PROFESSIONAL STAMP

REGISTERED PROFESSIONAL ENGINEER
MANNY D. FINCHER
C 53380
Exp. 03/31/24
STRUCTURAL
STATE OF CALIFORNIA
RS T#22088
02/16/24

THE PLANS, IDEAS & DESIGNS SHOWN ON THESE DRAWINGS ARE THE PROPERTY OF R&S TAVARES ASSOCIATES, INC. DEVISED SOLELY FOR THIS CONTRACT. THESE PLANS SHALL NOT BE USED, IN WHOLE OR IN PART, FOR ANY PURPOSE FOR WHICH THEY WERE NOT INTENDED WITHOUT THE EXPRESS WRITTEN CONSENT OF R&S TAVARES ASSOCIATES, INC. ©

CLIENT

Class Leasing
1651Juanita Street, San Jacinto, CA 92583
Voice (951) 943-1908 Fax (951)943-5768

ORIGINAL PC STATE AGENCY APPROVAL

APPROVED
DIV. OF THE STATE ARCHITECT
APP: 04-123059 PC
REVIEWED FOR
SS ☑ FLS ☑ ACS ☑ CG ☑
DATE: 02/20/2024

Revision Schedule

#	Description	Date

PROJECT TITLE
PC 2022 CBC: 24' x 40' EXPANDABLE TO 120' x 40'

SHEET TITLE
24'x40' T24 CZ 15 (WALL AC)

PROJECT NUMBER
22088

DRAWN BY
rMc/CG

CHECKED BY
RH/RT

DATE
06/15/2021

SHEET NO.
M2.12

SHEET OF

9/7/2023 11:16:16 AM C:\Users\User\Documents\22088- Aries, 24x40 PC - MainFile - Low Seismic_detached (2022)_CES&R24D63.rvt

BUILDING ENERGY ANALYSIS REPORT

PROJECT:
24X40 (PC 04-121369) - Wall AC
Climate Zone 16
Blue Canyon, CA

Project Designer:
R & S Tavares Associates
11590 W. Bernardo Court, Suite 100
San Diego, Ca. 92127

Report Prepared by:
LAL B. SAHGAL
LSA CONSULTING ENGINEERS
83, WINDSWEPT WAY
MISSION VIEJO, CA 92692
(949) 830-4746

Job Number:

Date:
7/26/2023

The EnergyPro computer program has been used to perform the calculations summarized in this compliance report. This program has approval and is authorized by the California Energy Commission for use with both the Residential and Nonresidential 2022 Building Energy Efficiency Standards.

This program developed by EnergySoft, LLC – www.energysoft.com.

TABLE OF CONTENTS

Cover Page	1
Table of Contents	2
Form NRCC/LMCC-PRF-E Certificate of Compliance	3
HVAC System Heating and Cooling Loads Summary	20

A. General Information

1	Project Name	24X40 (PC 04-121369) - Wall AC			
2	Run Title	Title 24 Analysis			
3	Project Location	Climate Zone 16			
4	City	Blue Canyon	5	Standards Version	Compliance 2022
6	Zip code	99999	7	Compliance Software (version)	EnergyPro 9.1
8	Climate Zone	16	9	Building Orientation (deg)	30
10	Building Type(s)	• Nonresidential	11	Weather File	BLUE-CANYON_STYP20.epw
12	Project Scope	• New complete scope	13	Number of Dwelling Units	0
14	Total Conditioned Floor Area in Scope (ft^2)	960	15	Total # of hotel/motel rooms	0
16	Total Unconditioned Floor Area (ft^2)	0	17	Fuel Type	Natural gas
18	Nonresidential Conditioned Floor Area	960	19	Total # of Stories (Habitable Above Grade)	1
20	Residential Conditioned Floor Area	0			

B. PROJECT SUMMARY

Table B shows which building components are included in the performance calculation. If indicated as not included, the project must show compliance prescriptively if within the permit application.

Building Components Complying via Performance

Envelope (See Table G)	Nonres	Performance	Solar Thermal Water Heating (See Table I3)	☐	Performance
	MultiFam	Not Included		☒	Not Included
Mechanical (See Table H)	Nonres	Performance	Covered Process: Commercial Kitchens (see Table J)	☐	Performance
	MultiFam	Not Included		☒	Not Included
Domestic Hot Water (See Table I)	Nonres	Not Included	Covered Process: Laboratory Exhaust (see Table J)	☐	Performance
	MultiFam	Not Included		☒	Not Included
Lighting (Indoor Conditioned, see Table K)	Nonres	Performance	Photovoltaics (see Table F)	☐	Performance
	MultiFam	Not Included		☒	Not Included
			Battery (see Table F)	☐	Performance
				☒	Not Included

Building Components Complying Prescriptively

The following building components are ONLY eligible for prescriptive compliance and should be documented on the NRCC form listed if within the scope of the permit application (i.e. compliance will not be shown on the NRCC-PRF-E).	
Indoor Lighting (Unconditioned) 140.6 & 170.2(e)	NRCC-LTI-E is required
Outdoor Lighting 140.7 & 170.2(e)	NRCC-LTO-E is required
Sign Lighting 140.8 & 170.2(e)	NRCC-LTS-E is required

Building Components Complying with Mandatory Measures

Electrical power systems, commissioning, solar ready, elevator and escalator requirements are mandatory and should be documented on the NRCC form listed if applicable (i.e. compliance will not be shown on the NRCC-PRF-E.)	
Electrical Power Distribution 110.11	NRCC-ELC-E is required
Commissioning 120.8	NRCC-CXR-E is required
Solar and Battery 110.10	NRCC-SAB-E is required

C1. COMPLIANCE SUMMARY

COMPLIES[3]

	Time Dependent Valuaton (TDV)		Source Energy Use
	Efficiency[1] (kBtu/ft^2 - yr)	Total[2] (kBtu/ft^2 - yr)	Total[2] (kBtu/ft^2 - yr)
Standard Design	307.23	307.23	49.92
Proposed Design	273.51	273.51	36.13
Compliance Margins	**33.72**	**33.72**	**13.79**
	Pass	**Pass**	**Pass**

[1] Efficiency measures include improvements like a better building envelope and more efficient equipment
[2] Compliance Totals include efficiency, photovoltaics and batteries
[3] Building complies when efficiency and total compliance margins are greater than or equal to zero and unmet load hour limits are not exceeded

C2. TDV ENERGY COMPLIANCE RESULTS FOR PERFORMANCE COMPONENTS (Annual TDV Energy Use, kBtu/ft^2 - yr)

COMPLIES[2]

Energy Component	Standard Design (TDV)	Proposed Design (TDV)	Compliance Margin (TDV)[1]
Space Heating	51.5	114.86	-63.36
Space Cooling	19.06	18.57	0.49
Indoor Fans	169.42	83.19	86.23
Heat Rejection	0	0	0
Pumps & Misc.	0	0	0
Domestic Hot Water	36.19	36.19	0
Indoor Lighting	31.06	20.7	10.36
Flexibility	---	---	---
EFFICIENCY COMPLIANCE TOTAL	**307.23**	**273.51**	**33.72 (11%)**
Photovoltaics	---	---	---
Batteries	---	---	---
TOTAL COMPLIANCE	**307.23**	**273.51**	**33.72 (11%)**

[1] Notes: This number in parenthesis following the Compliance Margin in column 4, represents the Percent Better than Standard.

C3. TDV ENERGY RESULTS FOR NON-REGULATED COMPONENTS[1]

Non-Regulated Energy Component	Standard Design (TDV)	Proposed Design (TDV)	Compliance Margin (TDV)[1]
Receptacle	63.66	63.66	---
Process	---	---	---
Other Ltg	---	---	---
Process Motors	---	---	---
TOTAL (TOTAL COMPLIANCE + NON-REGULATED COMPONENTS)	**370.89**	**337.17**	**33.72 (9.1%)**

[1] Notes: This table is not used for Energy Code Compliance.

C4. SOURCE ENERGY COMPLIANCE RESULTS FOR PERFORMANCE COMPONENTS (Annual SOURCE Energy Use, kBtu/ft^2 /yr)

COMPLIES[2]

Energy Component	Standard Design (SOURCE)	Proposed Design (SOURCE)	Compliance Margin (SOURCE)[1]
Space Heating	16.26	11.75	4.51
Space Cooling	1.3	1.31	-0.01
Indoor Fans	16.75	8.32	8.43
Heat Rejection	0	0	0
Pumps & Misc.	0	0	0
Domestic Hot Water	13.04	13.04	0
Indoor Lighting	2.57	1.71	0.86
Flexibility	---	---	---
EFFICIENCY COMPLIANCE TOTAL	**49.92**	**36.13**	**13.79 (27.6%)**
Photovoltaics	---	---	---
Batteries	---	---	---
TOTAL COMPLIANCE	**49.92**	**36.13**	**13.79 (27.6%)**

[1] Notes: This number in parenthesis following the Compliance Margin in column 4, represents the Percent Better than Standard.

C5. SOURCE ENERGY RESULTS FOR NON-REGULATED COMPONENTS[1]

Non-Regulated Energy Component	Standard Design (SOURCE)	Proposed Design (SOURCE)	Compliance Margin (SOURCE)[1]
Receptacle	4.92	4.92	---
Process	---	---	---
Other Ltg	---	---	---
Process Motors	---	---	---
TOTAL (TOTAL COMPLIANCE + NON-REGULATED COMPONENTS)	**54.84**	**41.05**	**13.79 (25.1%)**

[1] Notes: This table is not used for Energy Code Compliance.

C6. 'ABOVE CODE' QUALIFICATIONS

☐ This project is pursuing CalGreen Tier 1 ☐ This project is pursuing CalGreen Tier 2

C7. ENERGY USE SUMMARY

Energy Component	Standard Design Site (MWh)	Proposed Design Site (MWh)	Margin (MWh)	Standard Design Site (MBtu)	Proposed Design Site (MBtu)	Margin (MBtu)
Space Heating	0.1	3	-2.9	16.4	---	---
Space Cooling	0.8	0.7	0.1	---	---	---
Indoor Fans	5.6	2.8	2.8	---	---	---
Heat Rejection	---	---	---	---	---	---
Pumps & Misc.	---	---	---	---	---	---
Domestic Hot Water	---	---	---	13.6	13.6	0
Indoor Lighting	1.2	0.8	0.4	---	---	---
Flexibility	---	---	---	---	---	---
EFFICIENCY TOTAL	**7.7**	**7.3**	**0.4**	**30**	**13.6**	**16.4**
Photovoltaics	---	---	---	---	---	---
Batteries	---	---	---	---	---	---
ENERGY USE SUBTOTAL	**7.7**	**7.3**	**0.4**	**30**	**13.6**	**16.4**
Receptacle	2.5	2.5	0	---	---	---
Process	---	---	---	---	---	---
Other Ltg	---	---	---	---	---	---
Process Motors	---	---	---	---	---	---
ENERGY USE TOTAL	**10.2**	**9.8**	**0.4**	**30**	**13.6**	**16.4**

PROJECT SPECIFIC STATE AGENCY APPROVAL

IDENTIFICATION STAMP
DIV. OF THE STATE ARCHITECT
APP: 02-123433 INC:
REVIEWED FOR
SS ☑ FLS ☑ ACS ☑
DATE: 01/20/2026

R&S TAVARES ASSOCIATES
DESIGN ★ CONSULTING ★ PROJECT MGT
11590 W BERNARDO COURT, SUITE 100
SAN DIEGO, CA 92127
WWW.RSTAVARES.COM

PROFESSIONAL STAMP

REGISTERED PROFESSIONAL ENGINEER
MANNY D. FRANCISCO
S3380
Exp. 03/31/24
STRUCTURAL
STATE OF CALIFORNIA
RS T#22088
02/16/24

THE PLANS, IDEAS & DESIGNS SHOWN ON THESE DRAWINGS ARE THE PROPERTY OF R&S TAVARES ASSOCIATES, INC. DEVISED SOLELY FOR THIS CONTRACT. THESE PLANS SHALL NOT BE USED, IN WHOLE OR IN PART, FOR ANY PURPOSE FOR WHICH THEY WERE NOT INTENDED WITHOUT THE EXPRESS WRITTEN CONSENT OF R&S TAVARES ASSOCIATES, INC. ©

CLIENT

Class Leasing
1651Juanita Street, San Jacinto, CA 92583
Voice (951) 943-1908 Fax (951)943-5768

ORIGINAL PC STATE AGENCY APPROVAL

APPROVED
DIV. OF THE STATE ARCHITECT
APP: 04-123059 PC
REVIEWED FOR
SS ☑ FLS ☑ ACS ☑ CG ☑
DATE: 02/20/2024

Revision Schedule

#	Description	Date

PRE-CHECK (PC) DOCUMENT

CODE: 2019 CBC

A separate project application for construction is required

PROJECT TITLE
PC 2022 CBC: 24' x 40' EXPANDABLE TO 120' x 40'

SHEET TITLE
24'x40' T24 CZ 16 (WALL AC)

PROJECT NUMBER
22088

DRAWN BY
Author

CHECKED BY
Checker

DATE
06/15/2021

SHEET NO.
M2.13

SHEET OF

C:\Users\User\Documents\22088- Aries, 24x40 PC - MainFile - Low Seismic_detached (2022)_CES\AR24D63.rvt

9/7/2023 11:16:17 AM

C8. ENERGY USE INTENSITY (EUI)

	Standard Design (kBtu/ft² / yr)	Proposed Design (kBtu/ft² / yr)	Margin (kBtu/ft² / yr)	Margin Percentage
GROSS EUI[1]	67.5	49	18.5	27.41
NET EUI[1]	67.5	49	18.5	27.41

[1] *Notes: Gross EUI is Energy Use Total (not including PV)/Total Building Area. Net EUI is Energy Use Total (including PV)/Total Building Area.*

D1. EXCEPTIONAL CONDITIONS

- The project uses the Simplified Geometry Performance Modeling Approach which is not capable of modeling daylighting controls and assumes the prescriptive Secondary Daylit Control requirements are met. PRESCRIPTIVE COMPLIANCE documentation (form NRCC-LTI-02-E) for the requirements of section 140.6(d) Automatic Daylighting Controls in Secondary Daylit Zones is required.
- The building does not include service water heating. Verify that service water heating is not required and is not included in the design.
- Project is claiming Exception 2 to Section 140.10(a): No PV system is required where the required PV system size is less than 4 kWdc.

G1. ENVELOPE GENERAL INFORMATION (conditioned spaces only)

01	02	03	04
Opaque Surfaces & Orientation	Total Gross Surface Area (ft²)	Total Fenestration Area (ft²)	Window to Wall Ratio (%)
North-Facing[1]	400	0	0
East-Facing[2]	240	32	13.33
South-Facing[3]	400	0	0
West-Facing[4]	240	32	13.33
Total	**1280**	**64**	**5**
Roof	960	14	1.46

Notes
[1] *North-Facing is oriented to within 45 degrees of true north, including 45 00'00" east of north (NE), but excluding 45 00'00" west of north (NW),*
[2] *East-Facing is oriented to within 45 degrees of true east, including 45 00'00" south of east (SE), but excluding 45 00'00" north of east (NE),*
[3] *South-Facing is oriented to within 45 degrees of true south, including 45 00'00" west of south (SW), but excluding 45 00'00" east of south (SE),*
[4] *West-Facing is oriented to within 45 degrees of true west, including 45 00'00" north of west (NW), but excluding 45 00'00" south of west (SW),*

G4. NONRESIDENTIAL AIR BARRIER

01	02
Building Story Name	Air Barrier
Com-Floor 1	No air barrier

G5. OPAQUE SURFACE ASSEMBLY SUMMARY

01	02	03	04	05	06		07	08	09	10
Surface Name	Construction Type	Area (ft²)	Framing Type	Cavity R-Value	Continuous R-Value		Units	Value	Description of Assembly Layers	Status[1]
					Interior	Exterior				
R-19 Wood Framed Wall7	Exterior Wall	1,280	Wood	19	N/A	N/A	U-factor	0.0605	Wood siding - 1/2 in. Vapor permeable felt - 1/8 in. Composite-1 Gypsum Board - 1/2 in. Softwood - 1.5 in.	N
R-19 Metal Floor Crawlsp14	Exterior Floor	960	Metal	19	N/A	N/A	U-factor	0.0588	Vented Crawl Space Composite-2 Plywood - 1/2 in. Carpet - 3/4 in.	N
Standing Seam R-38 Metal16	Roof	960	N/A	36	N/A	N/A	U-factor	0.06	Metal Standing Seam - 1/16 in. Composite-3	N

[1] *Status: N - New, A - Altered, E - Existing*

G7A. FENESTRATION ASSEMBLY SUMMARY (NONRESIDENTIAL)

01	02	03	04	05	06	07	08	09
Fenestration Assembly Name	Fenestration Type/ Product Type / Frame Type	Certification Method[1]	Assembly Method	Area (ft²)	Overall U-factor	Overall SHGC	Overall VT	Status[2]
Sierra Pacific Windows	Vertical fenestration Operable window N/A	NFRC	Manufactured	64	0.35	0.24	0.5	N
Sola tube	Skylight Fixed window N/A	NFRC	Manufactured	14	0.39	0.37	0.65	N

[1] *Notes: Newly installed fenestration shall have a certified NFRC Label Certificate or use the CEC default tables found in Table 110.6-A and Table 110.6-B. Center of Glass (COG) values are for the glass-only, determined by the manufacturer, and are shown for ease of verification. Site-built fenestration values are calculated per Nonresidential Appendix NA6 and are used in the analysis.*
[2] *Status: N - New, A - Altered, E - Existing*

H1. DRY SYSTEM EQUIPMENT (FURNACES, AIR HANDLING UNITS, HEAT PUMPS, VRF, ECONOMIZERS ETC.)

01	02	03	04	05	06	07	08	09	10	11	12
Equipment Name	Equipment Type	Qty	Heating				Cooling			Economizer Type (if present)	Status[1]
			Total Heating Output (kBtu/h)	Supp Heat Output (kBtu/h)	Efficiency Unit	Efficiency	Total Cooling Output (kBtu/h)	Efficiency Unit	Efficiency		
AC-1	Single Package VHP Air System	1	34.37	13.65	COP	3.3	34.56	EER	11	Fixed DB	N

[1] *Status: N - New, A - Altered, E - Existing*

H3. NONRESIDENTIAL / COMMON USE AREA FAN SYSTEMS SUMMARY

01	02	03	04	05	06	07	08	09	10	11	12	13
Name or Item Tag	Qty	Design OA CFM	Supply Fan				Return / Relief Fan					Status[1]
			CFM	Power	Power Units	Control	Fan Type	CFM	Power	Power Units	Control	
AC-1	1	364.8	1,100	0.5	BHP	Constant Vol	N/A	N/A	N/A	N/A	N/A	N

[1] *Status: N - New, A - Altered, E - Existing*

H8. SYSTEM SPECIAL FEATURES

01	02	03	04
System Name	Equipment Type	Interlocks per 140.4(n)[1]	Other Special Features and Controls
AC-1	Single Package VHP Air System	No	Zone(s) With CO2 Sensor Vent. Control Fixed DB

Notes: This table includes controls related to the performance path only. For projects using the prescriptive path, mandatory and prescriptive controls requirements are documented on the NRCC-MCH-E.
[1] *Yes = interlocks are provided, No = interlocks are not provided, NA means no operable openings.*

H9. NONRESIDENTIAL / COMMON USE AREA & HOTEL/MOTEL VENTILATION

01	02	03	04	05	06	07
Zone Name	Mechanical Ventilation				Conditioned Area (sf)	DCV or Occupant Sensor Controls, or Both
	Ventilation Function	# of People	Supply OA CFM	Exhaust CFM		
1-Floor	Education - Classrooms (ages 9-18)	24	364.8	0	960	DCV

H11. ZONAL SYSTEM AND TERMINAL UNIT SUMMARY

01	02	03	04	05	06	07	08	09	10	11	12
System ID	System Type	Qty	Rated Capacity (kBtuh)		Airflow (cfm)			Fan			VSD
			Heating	Cooling	Design	Min.	Min. Ratio	Power	Power Units	Cycles	
1-First Floor-Trm	Uncontrolled	1	N/A	N/A	1,100	N/A	0	N/A	N/A	N/A	☐

K1. INDOOR CONDITIONED LIGHTING GENERAL INFO

01	02	03	04	05	06
Occupancy Type[1]	Conditioned Floor Area[2] (ft²)	Installed Lighting Power (Watts)	Lighting Control Credits (Watts)	Additional (Custom) Allowance	
				Area Category Footnotes (Watts)	Area Category Footnotes (Watts)
Classroom, Lecture, or Training Vocational	960	384	0	0	0
Building Totals:	**960**	**384**	**0**	**0**	**0**

[1] *See Table 140.6-C*
[2] *See NRCC-LTI-E for unconditioned spaces*
[3] *Lighting information for existing spaces modeled is not included in this table*

K2. INDOOR CONDITIONED LIGHTING SCHEDULE

Luminaire Schedule (includes all permanent installed lighting in conditioned space, and portable lighting over 0.3 w/ft² in offices)

01	02	03	04	05	06
Name or Item Tag	Complete Luminaire Description (i.e. 3-lamp fluorescent troffer, F32T8, one dimmable electronic ballast)	Installed Watts (Conditioned)			
		Watts per luminaire	How is Wattage determined	Total Number of Luminaires	Installed Watts
L-1	2x4 LED Panel	48	According to	8	384

[1] *If lighting power densities were used in the compliance model Building Departments will need to check prescriptive forms for Luminaire Schedule details.*

K3. INDOOR CONDITIONED LIGHTING CONTROL CREDITS

Lighting Control Credits Schedule (includes all lighting controls installed in conditioned space for compliance credit per 140.6(a)2 and Table 140.6-A)

01	02	03	04	05	06	07	08	09
Area Description	Primary Function Area (must meet requirements of Table 140.6-A and 170.2-L)	Type of Lighting Control	Power Adjustment Factor (PAF)	Luminaire Item Tag	Watts per Luminaire	# of Luminaires	Lighting Controlled (Watts)	Control Credit (Watts)
S-1-First Floor	Classroom, Lecture, or Training Vocational	N/A	N/A	L-1	48	8	384	0
						Lighting Control Credits (Conditioned) Total (Watts)		0

K4. INDOOR CONDITIONED LIGHTING MANDATORY LIGHTING CONTROL

Building Level Controls

01	02
Mandatory Demand Response 110.12(c)	Shut-Off Controls 130.1(c) & 160.5(b)4C
Required	Required

See NRCC-LTI-E for mandatory controls

L. DECLARATION OF REQUIRED CERTIFICATES OF INSTALLATION

Selections made by Documentation Author indicate which Certificates of Installation must be submitted for the features to be recognized for compliance. These documents must be retained and provided to the building inspector during construction and can be found online

Building Component	Form/Title
Envelope	NRCI-ENV-01-E - Must be submitted for all buildings
Envelope	NRCI-ENV-E - Envelope (for all buildings)
Mechanical	NRCI-MCH-01-E - Must be submitted for all buildings
Mechanical	NRCI-MCH-E - For all buildings with Mechanical Systems
Indoor Lighting	NRCI-LTI-01-E - Must be submitted for all buildings
Indoor Lighting	NRCI-LTI-E - Indoor Lighting (for all buildings)

M. DECLARATION OF REQUIRED CERTIFICATES OF ACCEPTANCE

Selections made by Documentation Author indicate which Certificates of Acceptance must be submitted for the features to be recognized for compliance. These documents must be provided to the building inspector during construction and must be completed through an Acceptance Test Technician Certification Provider (ATTCP).

Building Component	Form/Title
Envelope	NRCA-ENV-02-F - NRFC label verification for fenestration
Indoor Lighting	NRCA-LTI-02-A - Occupancy Sensors and Automatic Time Switch Controls.
Mechanical	NRCA-MCH-02-A - Outdoor Air must be submitted for all newly installed HVAC units. Note: MCH-02-A can be performed in conjunction with MCH-07-A Supply Fan VFD Acceptance (if applicable) since testing activities overlap
Mechanical	NRCA-MCH-05-A - Air Economizer Controls
Mechanical	NRCA-MCH-06-A Demand Control Ventilation Systems must be submitted for all systems required to employ demand controlled ventilation (refer to) can vary outside ventilation flow rates based on maintaining interior carbon dioxide (CO2) concentration setpoints.

N. DECLARATION OF REQUIRED CERTIFICATES OF VERIFICATION

Selections made by Documentation Author indicate which Certificates of Verification must be submitted for the features to be recognized for compliance. These documents must be retained and provided to the building inspector during construction and can be found online

There are no Certificates of Verification applicable to this project

Documentation Author's Declaration Statement

1. I certify that this Certificate of Compliance documentation is accurate and complete.

Documentation Author Name: LAL B. SAHGAL	Documentation Author Signature:
Company: LSA CONSULTING ENGINEERS	Signature Date:
Address: 83, WINDSWEPT WAY	CEA/HERS Certification Identification (if applicable): M26885
City/State/Zip: MISSION VIEJO, CA 92692	Phone: (949) 830-4746

Responsible Person's Declaration statement

I certify the following under penalty of perjury, under the laws of the State of California:

1. The information provided on this Certificate of Compliance is true and correct.
2. I am eligible under Division 3 of the Business and Professions Code to accept responsibility for the building design or system design identified on this Certificate of Compliance (responsible designer)
3. The energy features and performance specifications, materials, components, and manufactured devices for the building design or system design identified on this Certificate of Compliance conform to the requirements of Title 24, Part 1 and Part 6 of the California Code of Regulations.
4. The building design features or system design features identified on this Certificate of Compliance are consistent with the information provided on other applicable compliance documents, worksheets, calculations, plans and specifications submitted to the enforcement agency for approval with this building permit application.
5. I understand that a registered copy of this Certificate of Compliance shall be made available with the building permit(s) issued for the building, and made available to the enforcement agency for all applicable inspections, and I will take the necessary steps to accomplish this requirement.
6. I understand that a registered copy of this Certificate of Compliance is required to be included with the documentation the builder provides to the building owner at occupancy, and I will take the necessary steps to accomplish these requirements.

Responsible Designer Name:	Responsible Designer Signature:	
Company: R & S Tavares Associates		
Address: 11590 W. Bernardo Court, Suite 100	Date Signed:	
City/State/Zip: San Diego, Ca. 92127	License #:	
Phone:	Title:	Scope:
Responsible Designer Name:	Responsible Designer Signature:	
Company: R & S Tavares Associates		
Address: 11590 W. Bernardo Court, Suite 100	Date Signed:	
City/State/Zip: San Diego, Ca. 92127	License #:	
Phone:	Title:	Scope:

Responsible Designer Name: Lal Sahgal	Responsible Designer Signature:	
Company: LSA Consulting Engineers		
Address: 83, Windswept Way	Date Signed:	
City/State/Zip: Mission Viejo, Ca. 92692	License #: M26885	
Phone:	Title:	Scope:

HVAC SYSTEM HEATING AND COOLING LOADS SUMMARY

Project Name: 24X40 (PC 04-121369) - Wall AC	Date: 7/26/2023
System Name: AC-1	Floor Area: 960

ENGINEERING CHECKS		SYSTEM LOAD	COIL COOLING PEAK			COIL HTG. PEAK	
			CFM	Sensible	Latent	CFM	Sensible
Number of Systems	1						
Heating System							
Output per System	33,000	**Total Room Loads**	1,209	26,482	9,600	248	11,785
Total Output (Btuh)	33,000	**Return Vented Lighting**		0			
Output (Btuh/sqft)	34.4	**Return Air Ducts**		1,324			589
Cooling System		**Return Fan**		0			0
Output per System	36,000	**Ventilation**	365	3,129	-1,167	365	18,296
Total Output (Btuh)	36,000	**Supply Fan**		1,535			-1,535
Total Output (Tons)	3.0	**Supply Air Ducts**		1,324			589
Total Output (Btuh/sqft)	37.5						
Total Output (sqft/Ton)	320.0	**TOTAL SYSTEM LOAD**		33,795	8,433		29,724
Air System							
CFM per System	1,100	**HVAC EQUIPMENT SELECTION**					
Airflow (cfm)	1,100	Bard W36HB		31,415	2,901		13,777
Airflow (cfm/sqft)	1.15	HP Supplemental Coil					13,648
Airflow (cfm/Ton)	366.7						
Outside Air (%)	33.2%	**Total Adjusted System Output** (Adjusted for Peak Design conditions)		31,415	2,901		27,425
Outside Air (cfm/sqft)	0.38						
Note: values above given at ARI conditions		**TIME OF SYSTEM PEAK**		Jul 3 PM			Jan 1 AM

HEATING SYSTEM PSYCHROMETRICS (Airstream Temperatures at Time of Heating Peak)

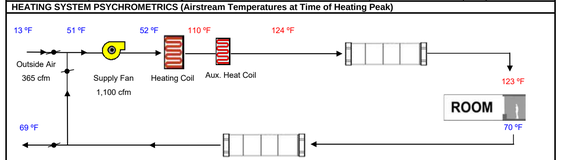

COOLING SYSTEM PSYCHROMETRICS (Airstream Temperatures at Time of Cooling Peak)

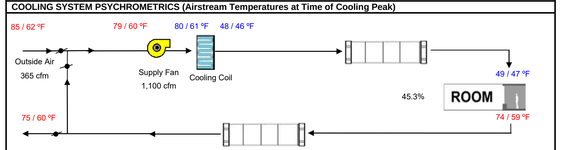

PROJECT SPECIFIC STATE AGENCY APPROVAL

IDENTIFICATION STAMP
DIV. OF THE STATE ARCHITECT
APP: 02-123433 INC:
REVIEWED FOR
SS ☑ FLS ☑ ACS ☑
DATE: 01/20/2026

R&S TAVARES ASSOCIATES
DESIGN ♦ CONSULTING ♦ PROJECT MGT
11590 W Bernardo Court, Suite 100
San Diego, CA 92127
www.rstavares.com

PROFESSIONAL STAMP

REGISTERED PROFESSIONAL ENGINEER
MANNY D. FRANCISCO
No. S3380
Exp. 03/31/24
STRUCTURAL
STATE OF CALIFORNIA
RS T#22088
02/16/24

THE PLANS, IDEAS & DESIGNS SHOWN ON THESE DRAWINGS ARE THE PROPERTY OF R&S TAVARES ASSOCIATES, INC. DEVISED SOLELY FOR THIS CONTRACT. THESE PLANS SHALL NOT BE USED, IN WHOLE OR IN PART, FOR ANY PURPOSE FOR WHICH THEY WERE NOT INTENDED WITHOUT THE EXPRESS WRITTEN CONSENT OF R&S TAVARES ASSOCIATES, INC. ©

CLIENT

Class Leasing
1651Juanita Street, San Jacinto, CA 92583
Voice (951) 943-1908 Fax (951)943-5768

ORIGINAL PC STATE AGENCY APPROVAL

APPROVED
DIV. OF THE STATE ARCHITECT
APP: 04-123059 PC
REVIEWED FOR
SS ☑ FLS ☑ ACS ☑ CG ☑
DATE: 02/20/2024

Revision Schedule

#	Description	Date

PRE-CHECK (PC) DOCUMENT

CODE: 2019 CBC

A separate project application for construction is required

PROJECT TITLE
PC 2022 CBC: 24' x 40' EXPANDABLE TO 120' x 40'

SHEET TITLE
24'x40' T24 CZ 16 (WALL AC)

PROJECT NUMBER: 22088
DRAWN BY: Author
CHECKED BY: Checker
DATE: 06/15/2021
SHEET NO. M2.14
SHEET OF

C:\Users\User\Documents\22088- Aries, 24x40 PC - MainFile - Low Seismic_detached (2022)_CES&R24DB3.rvt
9/7/2023 11:16:17 AM

ENVELOPE MANDATORY MEASURES: NONRESIDENTIAL — ENV-MM

Project Name	Date
120X40 (PC 04-116504) - Wall AC	6/23/2018

DESCRIPTION

Building Envelope Measures:

§110.8(a):	Installed insulating material shall have been certified by the manufacturer to comply with the California Quality Standards for insulating material, Title 20 Chapter 4, Article 3.
§110.8(c):	All Insulating Materials shall be installed in compliance with the flame spread rating and smoke density requirements of Sections 2602 and 707 of Title 24, Part 2.
§110.8(g):	Heated slab floors shall be insulated according to the requirements in Table 110.8-A.
§110.7(a):	All Exterior Joints and openings in the building that are observable sources of air leakage shall be caulked, gasketed, weatherstripped or otherwise sealed.
§110.6(a):	Manufactured fenestration products and exterior doors shall have air infiltration rates not exceeding 0.3 cfm/ft.^{2} of window area, 0.3 cfm/ft.^{2} of door area for residential doors, 0.3 cfm/ft.^{2} of door area for nonresidential single doors (swinging and sliding), and 1.0 cfm/ft.^{2} for nonresidential double doors (swinging).
§110.6(a):	Fenestration U-factor shall be rated in accordance with NFRC 100, or the applicable default U-factor.
§110.6(a) :	Fenestration SHGC shall be rated in accordance with NFRC 200, or NFRC 100 for site-built fenestration, or the applicable default SHGC.
§110.6(b):	Site Constructed Doors, Windows and Skylights shall be caulked between the unit and the building, and shall be weatherstripped (except for unframed glass doors and fire doors).
§120.7(a):	The opaque portions of the roof/ceiling that separates conditioned spaces from unconditioned spaces or ambient air shall meet the applicable U-Factor requirements as follows: **Metal Building-** The weighted average U-factor of the roof assembly shall not exceed 0.098. **Wood Framed and Others-** The weighted average U-factor of the roof assembly shall not exceed 0.075.
§120.7(b):	The opaque portions of walls that separate conditioned spaces from unconditioned spaces or ambient air shall meet the applicable U-factor as follows: **Metal Building-** The weighted average U-factor of the wall assembly shall not exceed 0.113. **Metal Framed-** The weighted average U-factor of the wall assembly shall not exceed 0.151. **Light Mass Walls-** A 6 inch or greater Hollow Core Concrete Masonry Unit shall have a U-factor not to exceed 0.440. **Heavy Mass Walls-** An 8 inch or greater Hollow Core Concrete Masonry Unit shall have a U-factor not to exceed 0.690. **Wood Framed and Others-** The weighted average U-factor of the wall assembly shall not exceed 0.110. **Spandrel Panels and Opaque Curtain Wall-** The weighted average U-factor of the spandrel panels and opaque curtain wall assembly shall not exceed 0.280. **Demising Walls-**. The opaque portions of framed demising walls shall meet the requirements of Item A or B below: A. Wood framed walls shall be insulated to meet a U-factor not greater than 0.099. B. Metal Framed walls shall be insulated to meet a U-factor not greater than 0.151.
§120.7(c):	The opaque portions of floors and soffits that separate conditioned spaces from unconditioned spaces or ambient air shall meet the applicable U-Factor requirements as follows: **Raised Mass Floors-** Shall have a minimum of 3 inches of lightweight concrete over a metal deck or the weighted average U-factor of the floor assembly shall not exceed 0.269. **Other Floors-**The weighted average U-factor of the floor assembly shall not exceed 0.071.

STATE OF CALIFORNIA
Domestic Water Heating System
CALIFORNIA ENERGY COMMISSION

CERTIFICATE OF COMPLIANCE — NRCC-PLB-E

This document is used to demonstrate compliance for nonresidential occupancies with requirements in 110.1, 110.3, 120.3, and 140.5, and with requirements in 141.0 for additions and alterations, for domestic water heating scopes using the prescriptive path. For high-rise residential and hotel/motel occupancies compliance is demonstrated with requirements in 110.1, 110.3, 160.4 and 170.2(d), and with requirements 180.1 for additions and 180.2 for alterations.

Project Name:	24X40 (PC 04-121369) - Wall AC	**Report Page:**	**(Page 1 of 6)**
Project Address:	Climate Zone 14	**Date Prepared:**	9/7/2023

A. GENERAL INFORMATION

01	Project Location (city)	Palmdale	02	Climate Zone 14
03	Occupancy Types Within Project (select all that apply):			

• Classroom

B. PROJECT SCOPE

This table includes domestic water heating systems that are within the scope of the permit application and are demonstrating compliance using the prescriptive paths outlined in 140./170.2(d) and 141.0(a)/ 180.1, or 141.0(b)2N / 180.2 for additions or alterations. Solar water heating systems are documented on the NRCC-SAB compliance document. Combined hydronic water heating systems are documented on the NRCC-MCH compliance document.

01	02	03
My project consists of (check all that apply):	System Type[1,2]	System Components
☒ New system (DHW system being installed for the first time)	Individual System (serving nonresidential spaces)	☒ Equipment ☒ Distribution ☒ Controls
☐ System Alteration (equipment, distribution or controls)		☐ Equipment ☐ Distribution ☐ Controls

[1]*FOOTNOTES: Point of use water heaters, or other non-central systems used to serve nonresidential spaces, are considered individual systems.*
[2] *Dwelling units refers to hotel/motel guest rooms and units in a multifamily residential occupancy.*
[3] *DHW systems serving 2 or more dwelling units are considered "Central Systems" for multifamily occupancies*

C. COMPLIANCE RESULTS

Table C will indicate if the project data input into the compliance document is compliant with water heating requirements. If this table says "DOES NOT COMPLY" or "COMPLIES with Exceptional Conditions" refer to Table D. or the table indicated as not compliant for guidance.

01	02	03	04
Domestic Hot Water Equipment	Distribution Systems	Controls	**Compliance Results**
Table F	Table G	Table H	
Yes	Yes	Yes	COMPLIES

D. EXCEPTIONAL CONDITIONS

This table is auto-filled with uneditable comments because of selections made or data entered in tables throughout the form.

STATE OF CALIFORNIA
Domestic Water Heating System
CALIFORNIA ENERGY COMMISSION

CERTIFICATE OF COMPLIANCE			**NRCC-PLB-E**
Project Name:	24X40 (PC 04-121369) - Wall AC	**Report Page:**	**(Page 3 of 6)**
		Date Prepared:	9/7/2023

G. DOMESTIC HOT WATER DISTRIBUTION SYSTEM

This table is used to demonstrate compliance for nonresidential occupancies with distribution requirements in 120.3 and 140.5. For multifamily and hotel/motel occupancies, compliance is demonstrated with requirements 110.3(c), 160.4, 170.2(d).

Mandatory Pipe Insulation All Occupancies

13	☐	For systems serving dwelling units, pipe insulation must meet the minimum insulation requirements in Table 160.4-A (see blow) except: • Piping that penetrates framing members shall not be required to have pipe insulation for the distance of the framing penetration. Piping that penetrates metal framing shall use grommets, plugs, wrapping or other insulating material to assure that no contact is made with the metal framing. Insulation shall abut securely against all framing members • Piping installed in interior or exterior walls shall not be required to have pipe insulation if all of the requirements are met for compliance with Quality Insulation Installation (QII) as specified in the Reference Residential Appendix RA3.5. • Piping surrounded with a minimum of 1 inch of wall insulation, 2 inches of crawlspace insulation, or 4 inches of attic insulation, shall not be required to have pipe insulation.
14	☒	For systems serving nonresidential spaces, pipe insulation for the following applications is specified to comply with Table 120.3-A (see below) per 120.3: • Recirculating system piping, including supply and return piping of the water heater • The first 8 ft of hot and cold outlet piping, including between storage tank and heat trap, for a nonrecirculating storage system • Pipes that are externally heated
15	☐	Insulation shall be protected from damage, including that due to sunlight, moisture, equipment maintenance, and wind. Insulation exposed to weather shall be installed with a cover suitable for outdoor service per 120.3(b) / 160.4(f). Pipe insulation buried below grade must be installed in a water proof and non-crushable casing or sleeve.

TABLE 120.3-A / 160.4-A PIPE INSULATION THICKNESS

Fluid Temperature Range (°F)	Conductivity Range (Btu-in per hour per ft^2 per °F)	Insulation Mean Rating Temp (°F)	Nominal Pipe Diameter (in)			
			< 1	1 to < 1.5	1.5 to < 4	1.5 to < 4 Multifamily & Hotel/Motel
			Minimum Insulation Required			
105-140	0.22 - 0.28	100	1.0 in or R-7.7	1.5 in or R-12.5	1.5 in or R-11	2.0 in or R-16

STATE OF CALIFORNIA
Domestic Water Heating System
CALIFORNIA ENERGY COMMISSION

CERTIFICATE OF COMPLIANCE			**NRCC-PLB-E**
Project Name:	24X40 (PC 04-121369) - Wall AC	**Report Page:**	**(Page 4 of 6)**
		Date Prepared:	9/7/2023

E. ADDITIONAL REMARKS

This table includes remarks made by the permit applicant to the Authority Having Jurisdiction.

F. DOMESTIC HOT WATER EQUIPMENT

This table is used to demonstrate compliance with mandatory equipment requirements in 110.1 and 110.3. Compliance with prescriptive requirements in 140.5(c) / 170.2(d) must also be demonstrated and with 141.0 / 180.1/ 180.2 for addition and alteration scopes.

Equipment Schedule: Water Heating Efficiency and Standby Loss

03	04			05		06		
System Name	A O Smith DEL-10	Exception to 140.5(c)/ 170.2(d)3		☐	Gas Service Water Heating System >= 1MMBtu/h[1]	Capacity-weighted Average Efficiency %		
07	08	09	10	11	12	13	14	15
Name or Item Tag	Equipment Type	Volume (gal)	Rated Input Capacity (Btu/h)	Max GPM/ First Hour Rating (FHR)	Rated Efficiency	Minimum Efficiency Required	Efficiency Unit	Designed Standby Loss	Maximum Standby Loss
A O Smith DEL-10	Consumer Rated Electric Storage	10	5,120	FHR >=75	0.95	0.93	UEF		

[1]*FOOTNOTE: In systems >= 1MMBtu/h with multiple units, gas water heaters with input capacity > 100,000 Btu/h may meet 90% Et requirements via an input capacity-weighted average.*

Water Heating Equipment All Occupancies

	Yes	No	Not Applicable	Requirement
18	☐	☐	☒	Unfired storage tank insulation shall have Internal + External >=R-16 OR External >=R-3.5. Label required per 110.3(i)3
19	☐	☐	☒	New state buildings 60% of energy for service water heating from site solar energy or recovered energy per 110.3(c)5
20	☐	☐	☒	Isolation valves for instantaneous water heater with input rating >6.8 kBTUH or 2 kW has been specified per 110.3(c)6
21	☐	☐	☒	School buildings < 25,000 ft^2 and < 4 stories must install a heat pump water heating system per 140.5(a)1. Water heating systems serving an individual bathroom space may be an instantaneous electric water heater.

STATE OF CALIFORNIA
Domestic Water Heating System
CALIFORNIA ENERGY COMMISSION

CERTIFICATE OF COMPLIANCE			**NRCC-PLB-E**
Project Name:	24X40 (PC 04-121369) - Wall AC	**Report Page:**	**(Page 5 of 6)**
		Date Prepared:	9/7/2023

H. DOMESTIC HOT WATER CONTROLS

This table is used to demonstrate compliance with control requirements in 110.3 for all occupancies. For multifamily residential and hotel/motel occupancies, compliance is also demonstrated with requirements in 160.4(e) / 170.2(d).

	Yes	No	Not Applicable	Requirement
01	☒	☐	☐	Construction documents require manufacturer certification that service water-heating systems are equipped with automatic temperature controls capable of adjusting temperature settings per 110.3(a).
02	☐	☐	☒	Systems with capacity > 167,000 BTUH equipped with outlet temperature controls per 110.3(c)1 unless covered by California Plumbing Code 613.0.
03	☐	☐	☒	Controls for circulating pumps or electrical heat trace systems are capable of automatically turning off the system per §110.3(c)2 unless systems serves healthcare facility.
04	☐	☐	☒	For recirculation systems serving multiple dwelling units, design includes automatic pump controls per 170.2(d) or 180.1(b)3 for additions.
05	☐	☐	☒	For recirculation systems serving individual dwelling units, design includes manual on/off controls as specified in Reference Appendix RA4.4.9 per 170.2(d).
06	☐	☐	☒	Combustion air positive shut-off shall be provided per 160.4(3).on all newly installed commercial boilers as follows: • Boilers with input capacity >= 2.5 MMBtu/h, in which the boiler is designed to operate with a nonpositive vent static pressure • Boilers where one stack serves two or more boilers with a total combined input capacity per stack of 2.5 MMBtu/h.
07	☐	☐	☒	Boiler combustion air fans with motor >= 10 hp shall meet one of the following • The fan motor shall be driven by a variable speed drive OR • The fan motor shall include controls that limit the fan motor demand to <=30% of the total design wattage at 50% of the design air volume.
08	☐	☐	☒	Newly installed boilers with an input capacity (d/gte/)1 5MMBtu/h and a steady state full-load combustion efficiency < 90% shall maintain excess (stack-gas) oxygen concentrations <= 5% by volume on a dry basis over firing rates of 20-100%. Combustion air volume shall be controlled with respect to firing rate or flue gas oxygen concentration. Use of a common gas and combustion air control linkage or jack shaft is prohibited.

STATE OF CALIFORNIA
Domestic Water Heating System
CALIFORNIA ENERGY COMMISSION

CERTIFICATE OF COMPLIANCE			**NRCC-PLB-E**
Project Name:	24X40 (PC 04-121369) - Wall AC	**Report Page:**	**(Page 6 of 6)**
Project Address:	Climate Zone 14	**Date Prepared:**	9/7/2023

I. DECLARATION OF REQUIRED CERTIFICATES OF INSTALLATION

Selections have been made based an information provided in this document. If any selection have been changed by permit applicant, an explanation should be included in Table E. Additional Remarks. These documents must be provided to the building inspector during construction and can be found online

Form/Title

NRCI-PLB-E - Must be submitted for all buildings

J. DECLARATION OF REQUIRED CERTIFICATES OF ACCEPTANCE

There are no forms required for this project.

K. DECLARATION OF REQUIRED CERTIFICATES OF VERIFICATION

There are no forms required for this project.

DOCUMENTATION AUTHOR'S DECLARATION STATEMENT

I certify that this Certificate of Compliance documentation is accurate and complete.

Documentation Author Name: LAL B. SAHGAL	Documentation Author Signature: Lal Sahgal
Company: LSA CONSULTING ENGINEERS	Signature Date:
Address: 83, WINDSWEPT WAY	CEA/ HERS Certification Identification (if applicable): M26885
City/State/Zip: MISSION VIEJO CA 92692	Phone: (949) 830-4746

RESPONSIBLE PERSON'S DECLARATION STATEMENT

I certify the following under penalty of perjury, under the laws of the State of California:
1. The information provided on this Certificate of Compliance is true and correct.
2. I am eligible under Division 3 of the Business and Professions Code to accept responsibility for the building design or system design identified on this Certificate of Compliance (responsible designer)
3. The energy features and performance specifications, materials, components, and manufactured devices for the building design or system design identified on this Certificate of Compliance conform to the requirements of Title 24, Part 1 and Part 6 of the California Code of Regulations.
4. The building design features or system design features identified on this Certificate of Compliance are consistent with the information provided on other applicable compliance documents, worksheets, calculations, plans and specifications submitted to the enforcement agency for approval with this building permit application.
5. I will ensure that a completed signed copy of this Certificate of Compliance shall be made available with the building permit(s) issued for the building, and made available to the enforcement agency for all applicable inspections. I understand that a completed signed copy of this Certificate of Compliance is required to be included with the documentation the builder provides to the building owner at occupancy.

Responsible Designer Name: Lal Sahgal	Responsible Designer Signature: Lal Sahgal
Company: LSA Consulting Engineers	Date Signed: 2023-09-07
Address: 83, Windswept Way	License: M26885
City/State/Zip: Mission Viejo Ca. 92692	Phone:

Mandatory Measures: The following notes (items) represent the Mandatory Measures for all buildings.

Heat pumps with supplementary electric resistance heaters shall have controls:

1) That prevent supplementary heater operation when the heating load can be met by the heat pump alone; and

2) In which the cut-on temperature for compression heating is higher than the cut-on temperature for supplementary heating, and the cut-off temperature for compression heating is higher than the cut-off temperature for supplementary heating.

Sec. 110.2 (b)

The minimum rate of outdoor air required per Section 120.1 (b) 2 shall be supplied to each space at all time the space is usually occupied.

Sec. 120.1 (c) 3

The Lesser of the minimum rate of outdoor air required by Sec. 120.1 (b) 2, or three complete air changes shall be supplied to the entire building during the one-hour period immediately before the building is normally occupied.

Sec. 120.1 (c) 2

Hotel/Motel Guest Room Thermostats shall have numeric temperature set points in degrees F; and set point stops accessible only to authorized personnel, to restrict over-heating and over-cooling.

Sec. 120.2 (c)

All air distribution system ducts and plenums, including, but not limited to, building cavities, mechanical closets, air-handler boxes and support platforms used as ducts or plenums, shall be installed, sealed and insulated to meet the requirements of chapter 6 of the 2001 CMC. Supply-air and return-air ducts conveying heated or cooled air shall be insulated to a minimum installed level of R-8, unless ducts are in conditioned space.

Sec. 120.4 (a)

The thermostatic controls for HVAC systems shall meet the following requirements as applicable:

a) Each space conditioning zone shall be controlled by an individual thermostatic control that responds to temperature within the zone and meets the applicable requirements of Subsection (b).

b) Each Thermostatic control required by Subsection (a) shall be capable of being set locally or remotely by adjustment or selection of sensors to control:

1) Comfort heating down to 55°F or lower.

2) Comfort Cooling up to 85°F or higher.

3) Both heating and cooling, the thermostatic controls shall be capable of providing a temperature range or dead band of at least 5°F within which the supply of heating and cooling energy to the zone is shut off or reduced to a minimum.

Sec. 120.2 (a) & (b)

1) Outdoor air supply and exhaust equipment shall be installed with dampers that automatically close upon fan shutdown.

Sec. 120.2 (f)

2) Demand Control Ventilation Devices (CO2 sensors) shall be installed in accordance with Sec. 120.1 (c) 4.

Sec. 120.1 (c) 4

3) Each space-conditioning system shall be installed with controls that comply with Items 1 and 2 below:

1) Are capable of automatically shutting off the system during periods of non-use and shall have:

a) An automatic time switch control device complying with Sec. 119(c), with an accessible manual override that allows operation of the system for up to 4 hours; or
b) An occupancy sensor; or
c) A four-hour timer that can be manually operated.
d) EXCEPTION: Mechanical systems serving retail stores and associated malls, restaurants, grocery stores, churches, and theaters equipped with 7-day programmable timers.

2) Automatically restart and temporarily operate the system as required to maintain:
a) A setback heating thermostat set point, if the system provides mechanical heating; and
EXCEPTION: Area with the design winter outdoor temperature of greater than 32°F.
b) A setup cooling thermostat set point, if the system provides mechanical cooling.

EXCEPTION: Area with the design summer outdoor temperature of less than 100°F.
EXCEPTION: Systems serving hotel/motel guest rooms, if they have a readily accessible manual shut-off switch.

Sec. 120.2 (e)

4) The piping for all space conditioning and service water heating systems shall be insulated in accordance with TABLE 123-A.

Sec. 120.3

5) Service water heating systems and equipment shall meet the applicable requirements of the Appliance Efficiency Regulations as required by Sec. 110.1.

Sec. 110.3 (b)

6) Service hot water systems with circulating pumps or with electrical heat trace systems shall be capable of automatically turning off the system.

Sec. 110.3 (c) 2

7) Lavatories in public restrooms shall have controls that limit the water supply temperature to 110°F.

Sec. 110.3 (c) 3

PROJECT SPECIFIC STATE AGENCY APPROVAL

IDENTIFICATION STAMP
DIV. OF THE STATE ARCHITECT
APP: 02-123433 INC:
REVIEWED FOR
SS ☑ FLS ☑ ACS ☑
DATE: 01/20/2026

R&S TAVARES ASSOCIATES
DESIGN ★ CONSULTING ★ PROJECT MGT
11590 W BERNARDO COURT, SUITE 100
SAN DIEGO, CA 92127
WWW.RSTAVARES.COM

PROFESSIONAL STAMP

REGISTERED PROFESSIONAL ENGINEER — MANNY D. FRANCISCO — No. 63380 — 03/31/24 — CIVIL STRUCTURAL — STATE OF CALIFORNIA
RST#22088
02/16/24

THE PLANS, IDEAS & DESIGNS SHOWN ON THESE DRAWINGS ARE THE PROPERTY OF R&S TAVARES ASSOCIATES, INC. DEVISED SOLELY FOR THIS CONTRACT. THESE PLANS SHALL NOT BE USED, IN WHOLE OR IN PART, FOR ANY PURPOSE FOR WHICH THEY WERE NOT INTENDED WITHOUT THE EXPRESS WRITTEN CONSENT OF R&S TAVARES ASSOCIATES, INC. ©

CLIENT

Class Leasing
1651Juanita Street, San Jacinto, CA 92583
Voice (951) 943-1908 Fax (951)943-5768

ORIGINAL PC STATE AGENCY APPROVAL

APPROVED
DIV. OF THE STATE ARCHITECT
APP: 04-123059 PC
REVIEWED FOR
SS ☑ FLS ☑ ACS ☑ CG ☑
DATE: 02/20/2024

Revision Schedule

#	Description	Date

PRE-CHECK (PC) DOCUMENT

Code: 2022 CBC

A separate project application for construction is required

PROJECT TITLE
PC 2022 CBC: 24' x 40' EXPANDABLE TO 120' x 40'

SHEET TITLE
ENVELOPE AND NOTES

PROJECT NUMBER
22088

DRAWN BY
rMc/CG

CHECKED BY
RH/RT

DATE

SHEET NO.
M3.3

SHEET OF

8/4/2021 4:23:31 PM C:\Users\User\Documents\20093 - Aries, 24x40 PC - MainFile - Low Seismic_6.7_michael43356.rvt

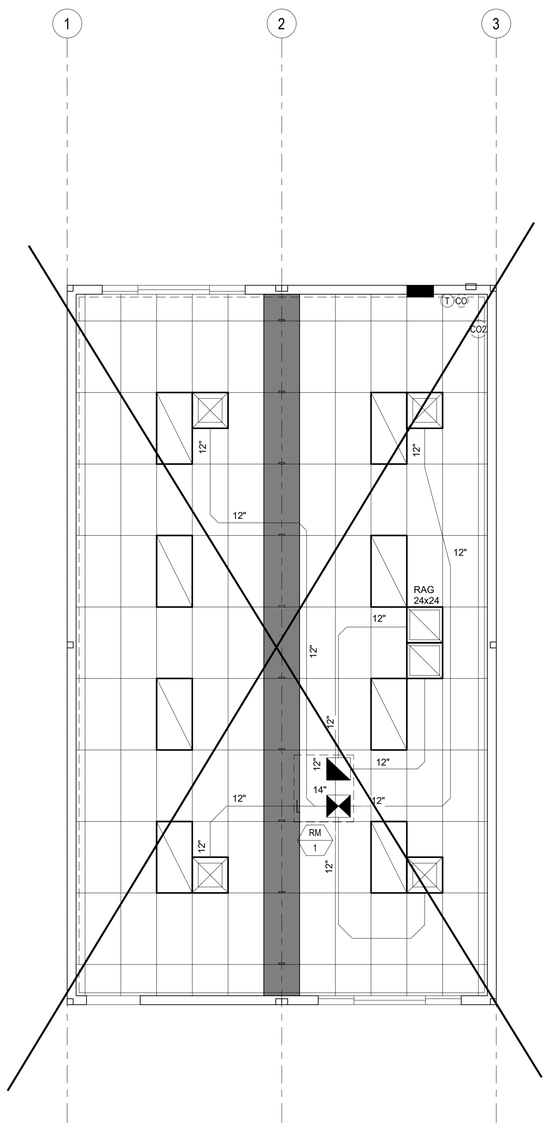

OPT. ROOF MOUNTED

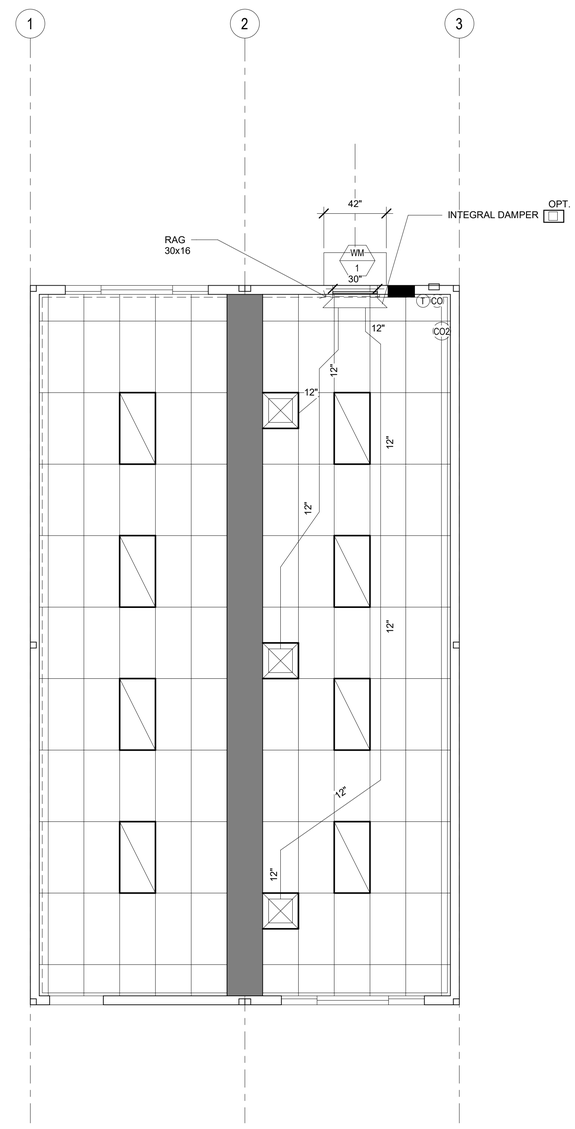

OPT. WALL MOUNTED

1 *1/4" = 1'-0"*
24x40 RM-1 MECH PLANS

6/15/2021 11:53:32 PM C:\Users\User\Documents\20093 - Aries, 24x40 PC - MainFile - Low Seismic_6.7_CESAR24D63.rvt

PROJECT SPECIFIC STATE AGENCY APPROVAL

IDENTIFICATION STAMP
DIV. OF THE STATE ARCHITECT
APP: 02-123433 INC:
REVIEWED FOR
SS ☑ FLS ☑ ACS ☑
DATE: 01/20/2026

R&S TAVARES ASSOCIATES
DESIGN ◆ CONSULTING ◆ PROJECT MGT
11590 W BERNARDO COURT, SUITE 100
SAN DIEGO, CA 92127
WWW.RSTAVARES.COM

PROFESSIONAL STAMP

REGISTERED PROFESSIONAL ENGINEER
MANNY D. FRANCISCO
C 53380
03/31/24
CIVIL STRUCTURAL
STATE OF CALIFORNIA
RST#22088
02/16/24

THE PLANS, IDEAS & DESIGNS SHOWN ON THESE DRAWINGS ARE THE PROPERTY OF R&S TAVARES ASSOCIATES, INC. DEVISED SOLELY FOR THIS CONTRACT. THESE PLANS SHALL NOT BE USED, IN WHOLE OR IN PART, FOR ANY PURPOSE FOR WHICH THEY WERE NOT INTENDED WITHOUT THE EXPRESS WRITTEN CONSENT OF R&S TAVARES ASSOCIATES, INC. ©

CLIENT

Class Leasing
1651Juanita Street, San Jacinto, CA 92583
Voice (951) 943-1908 Fax (951)943-5768

ORIGINAL PC STATE AGENCY APPROVAL

APPROVED
DIV. OF THE STATE ARCHITECT
APP: 04-123059 PC
REVIEWED FOR
SS ☑ FLS ☑ ACS ☑ CG ☑
DATE: 02/20/2024

Revision Schedule

#	Description	Date

PRE-CHECK (PC) DOCUMENT

Code: 2022 CBC

A separate project application for construction is required

PROJECT TITLE

PC 2022 CBC: 24' x 40' EXPANDABLE TO 120' x 40'

SHEET TITLE

MECHANICAL CEILING PLAN 24x40

PROJECT NUMBER

22088

DRAWN BY

rMc/SC

CHECKED BY

RH/RT

DATE

SHEET NO.

M5.1

SHEET OF

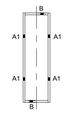

VENT AREA REQ = $\frac{960}{150}$ SF = 6.4 SF

VENT AREA AVAIL = (4)2.175 + (2)*1.875 = 12.5 SF

NET AREA AVAIL = 0.6 * 12.5 = 7.5 SF

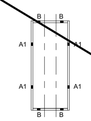

VENT AREA REQ = $\frac{1440}{150}$ SF = 9.6 SF

VENT AREA AVAIL (4)2.175 + (4)*1.875 = 16.25 SF

NET AREA = 0.6 * 16.25 = 9.75 SF

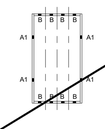

VENT AREA REQ = $\frac{1920}{150}$ SF = 12.8 SF

VENT AREA AVAIL (4)2.175 + (8)*1.875 = 23.75 SF

NET AREA = 0.6 * 23.75 = 14.25 SF

NOTE: WOOD FOUNDATION EXPANDABLE TO 48x40

1 ***50+15 VENTING LAYOUT***

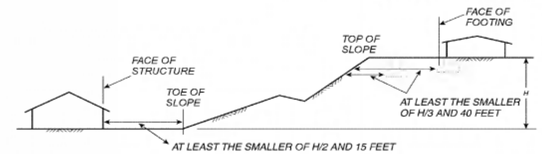

For SI: 1 foot = 304.8 mm.

FIGURE 1808.7.1
FOUNDATION CLEARANCES FROM SLOPES

3 ***1/4" = 1'-0"***
FOUNDATION SETBACKS

1. WOOD FOUNDATION CONSTRUCTION IS ALLOWED FOR BUILDINGS WITH 2160 SF AND UNDER.

2. SILL PLATES SHALL BE OF FOUNDATION GRADE REDWOOD OR PRESERVATIVE PRESURE TREATED MATERIAL AND IS ALLOWED TO REST DIRECTLY ON SOIL OR PAVEMENT. MATERIALS ABOVE THE SILL PLATES ARE NOT CONTROLLED BY THIS REQUIREMENT.

3. VENTS THAT OCCUR INSIDE RAMP BOUNDARIES SHALL REQUIRE A VENT OF EQUAL SIZE AT RAMP SKIRTING.

4. TO PREVENT SLIDING; A 1 INCH G.S. SCHEDULE 40 PIPE (1.315" ACTUAL O.D.) SHALL BE ATTACHED TO SILL PLATE AND ANCHORED INTO THE EARTH W/ 12" MIN EMBEDMENT (PROJECTED VERTICALLY) @ 10' - 0" MAX O.C. AND SHALL BE LOCATED A MAXIMIUM OF 2'-0" FROM CORNERS

5. STACKED FOUNDATION MEMBERS SHALL BE FASTENED TO ONE ANOTHER W/ CORROSION RESISTANT NAILS.

6. WOOD FOUNDATION HAVE BEEN DESIGNED FOR AN ALLOWABLE BEARING PRESSURE OF 1,000 PSF IN ABSENSE OF A SOILS INVESTIGATION REPORT PROVIDED BY A LICENSED GEOTECHNICAL ENGINEER.

7. REFER TO ARCHITECT'S SITE PLAN FOR DRAINAGE.

7 ***1/4" = 1'-0"***
NOTES FOR 50+15

KEY PLAN VENTING SCHEDULE

VENT "A1" (SIDEWALL): 3'-6" x 7.5" = **2.188 SF VENTILATION AVAILABLE**

VENT "B" (ENDWALL): 3'-0" x 7.5" = **1.875 SF VENTILATION AVAILABLE**

SEE 2/F1.40 FOR REFERENCE

9 ***1/4" = 1'-0"***
KEY PLAN VENTING SCHEDULE FOR 50+15 PSF

(2) 16d NAILS SILL TO BASE CONNECTION FOR 50+15 SEE 7 / F1.10

	ENDWALL	SIDEWALL	SEPERATION
24x40	7" O.C	12" O.C	12" O.C
36x40	7" O.C	12" O.C	12" O.C
48x40	7" O.C	12" O.C	12" O.C

6 ***1/4" = 1'-0"***
NAILING SCHEDULE FOR 50+15

WOOD FOUNDATION PLATE SCHEDULE

50 + 15 PSF

PLATES	END WALL	SIDE WALL	MODLINE ENDS	MODLINE INTERIOR	ML "B" ENDS	ML "B" INTERIOR	SEPERATION ENDS	SEPERATION INTERIOR
BOOSTER	2x4	2x4	2x6	2x6	2x8	2x8	2x4	2x4
TOP	2x6	2x6	2x8	2x8	2x10	2x10	2x6	2x6
BASE	2x8	2x8	2x10	2x10	2x12	2x12	2x8	2x8
SILL	2x12	2x12	(6) 2x12, 24" LONG	(6) 2x12, 24" LONG	(8) 2x12, 24" LONG	(8) 2x12, 24" LONG	2x12	2x12

* MODLINE "B" - MODLINE W/ EXT. WALLS BACK-TO-BACK SEE F1.14

8 ***1/4" = 1'-0"***
WOOD FOUNDATION PLATE SCHEDULE FOR 50+15

TIE PLATE SCHEDULE

	END WALL	SIDE WALL
24x40	5	3
36x40	7	3
48x40	10	3

4 ***1/4" = 1'-0"***
TIE PLATE SCHEDULE FOR 50+15

PROJECT SPECIFIC STATE AGENCY APPROVAL

IDENTIFICATION STAMP
DIV. OF THE STATE ARCHITECT
APP: 02-123433 INC:
REVIEWED FOR
SS ☑ FLS ☑ ACS ☑
DATE: 01/20/2026

R&S TAVARES ASSOCIATES
DESIGN ★ CONSULTING ★ PROJECT MGT
11590 W BERNARDO COURT, SUITE 100
SAN DIEGO, CA 92127
WWW.RSTAVARES.COM

PROFESSIONAL STAMP

REGISTERED PROFESSIONAL ENGINEER
MANNY D. FRANCISCO
No. 93380
Exp. 03/31/24
STRUCTURAL
STATE OF CALIFORNIA

RST#22088

02/16/24

THE PLANS, IDEAS & DESIGNS SHOWN ON THESE DRAWINGS ARE THE PROPERTY OF R&S TAVARES ASSOCIATES, INC. DEVISED SOLELY FOR THIS CONTRACT. THESE PLANS SHALL NOT BE USED, IN WHOLE OR IN PART, FOR ANY PURPOSE FOR WHICH THEY WERE NOT INTENDED WITHOUT THE EXPRESS WRITTEN CONSENT OF R&S TAVARES ASSOCIATES, INC. ©

CLIENT

Class Leasing
1651Juanita Street, San Jacinto, CA 92583
Voice (951) 943-1908 Fax (951)943-5768

ORIGINAL PC STATE AGENCY APPROVAL

APPROVED
DIV. OF THE STATE ARCHITECT
APP: 04-123059 PC
REVIEWED FOR
SS ☑ FLS ☑ ACS ☑ CG ☑
DATE: 02/20/2024

Revision Schedule

#	Description	Date

PRE-CHECK (PC) DOCUMENT

Code: 2022 CBC

A separate project application for construction is required

PROJECT TITLE

PC 2022 CBC:24' x 40' EXPANDABLE TO 120' x 40'

SHEET TITLE

WOOD FOUNDATION NOTES SCHED FOR BLDG W/ 50+15

PROJECT NUMBER

22088

DRAWN BY

rMc/SC

CHECKED BY

JA/RT

DATE

SHEET NO.

F1.10

SHEET OF

6/16/2021 7:44:47 AM C:\Users\User\Documents\RST#20132 - Class Leasing_PC 24x40 to 120x40 HS_detached_CESAR24D63.rvt

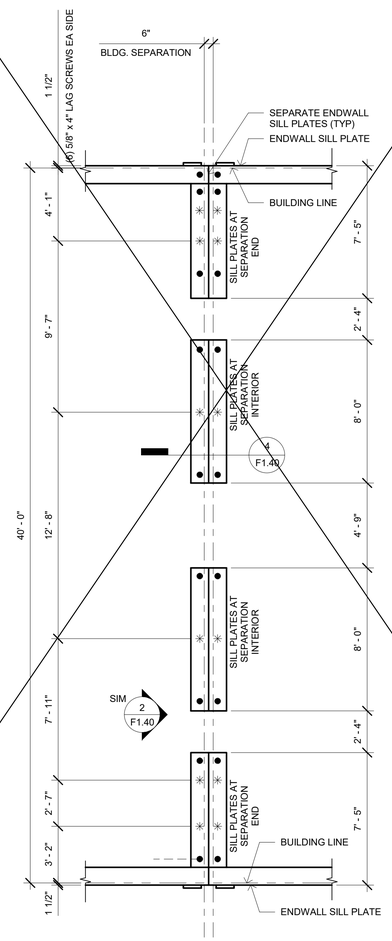

SYMBOLS LEGEND
✳ LAG SCREWS (6 TOTAL EACH SIDE)
● SILL RESTRAINTS (SEE NOTE #4, 7 / F1.10)

3 *1/4" = 1'-0"*
FOOTING AT SEPARATION

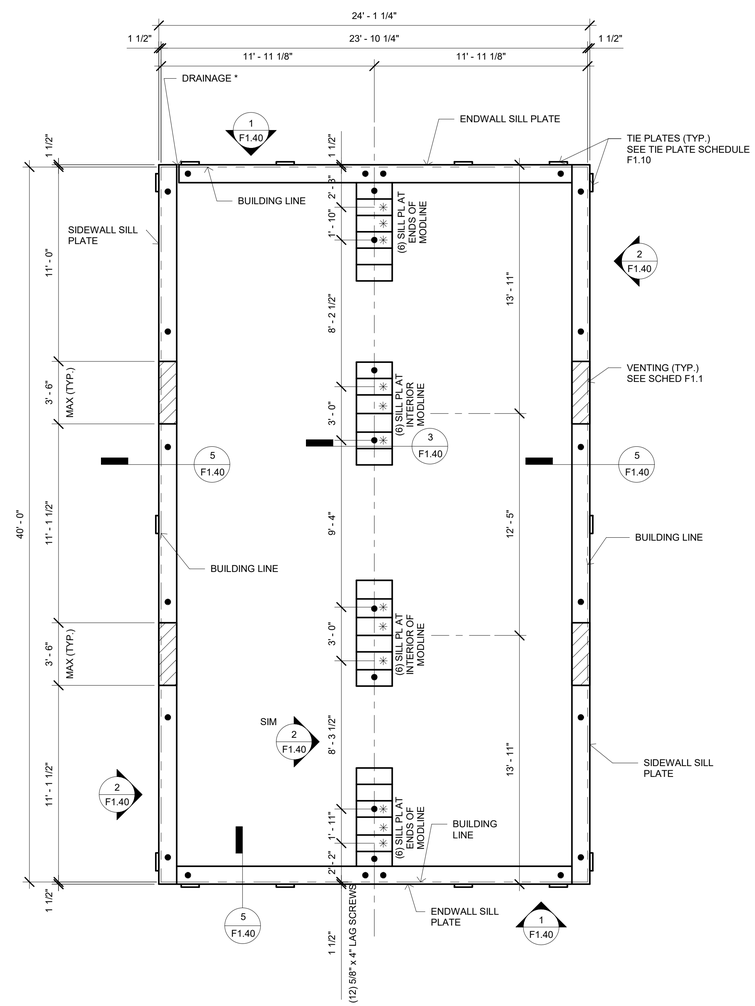

* REFER TO ARCHITECTURAL SITE PLAN FOR DRAINAGE

SYMBOLS LEGEND
✳ LAG SCREWS (12 TOTAL)
● SILL RESTRAINTS (SEE NOTE #4, 7 / F1.10)

2 *1/4" = 1'-0"*
24x40 FOUNDATION PLAN

PROJECT SPECIFIC STATE AGENCY APPROVAL

IDENTIFICATION STAMP
DIV. OF THE STATE ARCHITECT
APP: 02-123433 INC:
REVIEWED FOR
SS ☑ FLS ☑ ACS ☑
DATE: 01/20/2026

R&S TAVARES ASSOCIATES
DESIGN ◆ CONSULTING ◆ PROJECT MGT
11590 W Bernardo Court, Suite 100
San Diego, CA 92127
www.rstavares.com

PROFESSIONAL STAMP

REGISTERED PROFESSIONAL ENGINEER
MANNY D. FRANCISCO
No. 63380
03/31/24
CIVIL STRUCTURAL
STATE OF CALIFORNIA
RST#22088
02/16/24

THE PLANS, IDEAS & DESIGNS SHOWN ON THESE DRAWINGS ARE THE PROPERTY OF R&S TAVARES ASSOCIATES, INC. DEVISED SOLELY FOR THIS CONTRACT. THESE PLANS SHALL NOT BE USED, IN WHOLE OR IN PART, FOR ANY PURPOSE FOR WHICH THEY WERE NOT INTENDED WITHOUT THE EXPRESS WRITTEN CONSENT OF R&S TAVARES ASSOCIATES, INC. ©

CLIENT

Class Leasing
1651Juanita Street, San Jacinto, CA 92583
Voice (951) 943-1908 Fax (951)943-5768

ORIGINAL PC STATE AGENCY APPROVAL

APPROVED
DIV. OF THE STATE ARCHITECT
APP: 04-123059 PC
REVIEWED FOR
SS ☑ FLS ☑ ACS ☑ CG ☑
DATE: 02/20/2024

Revision Schedule

#	Description	Date

PRE-CHECK (PC) DOCUMENT

Code: 2022 CBC

A separate project application for construction is required

PROJECT TITLE
PC 2022 CBC:24' x 40' EXPANDABLE TO 120' x 40'

SHEET TITLE
WOOD FOUNDATION PLAN 24x40 BLDG W/ 50+15

PROJECT NUMBER
22088

DRAWN BY
rMc/SC

CHECKED BY
JA/RT

DATE

SHEET NO.
F1.11

SHEET OF

6/16/2021 7:44:48 AM C:\Users\User\Documents\RST#20132 - Class Leasing, PC 24x40 to 120x40 HS_detached_CESAR24D63.rvt

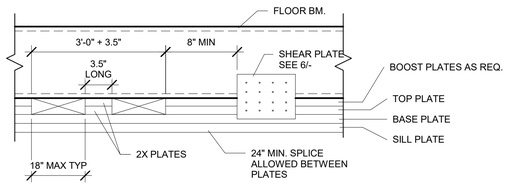

1 *1 1/2" = 1'-0"*
VENT OPENING OVER BASE PLATE

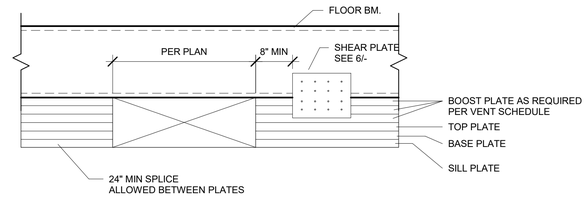

2 *1 1/2" = 1'-0"*
VENT OPENING @ SIDEWALL OR MODLINE @ SEPERATION

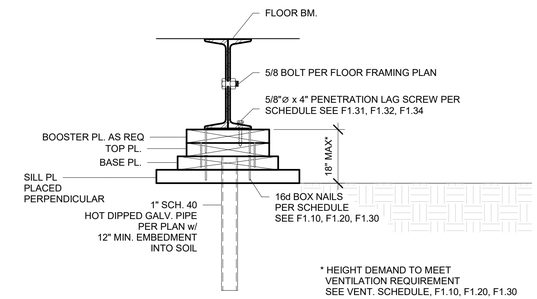

3 *1 1/2" = 1'-0"*
FOUNDATION PAD AT MOD LINE

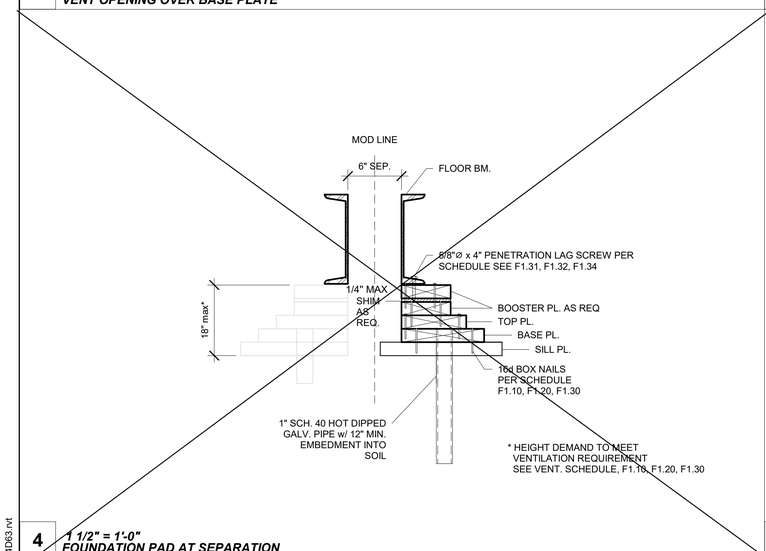

4 *1 1/2" = 1'-0"*
FOUNDATION PAD AT SEPARATION

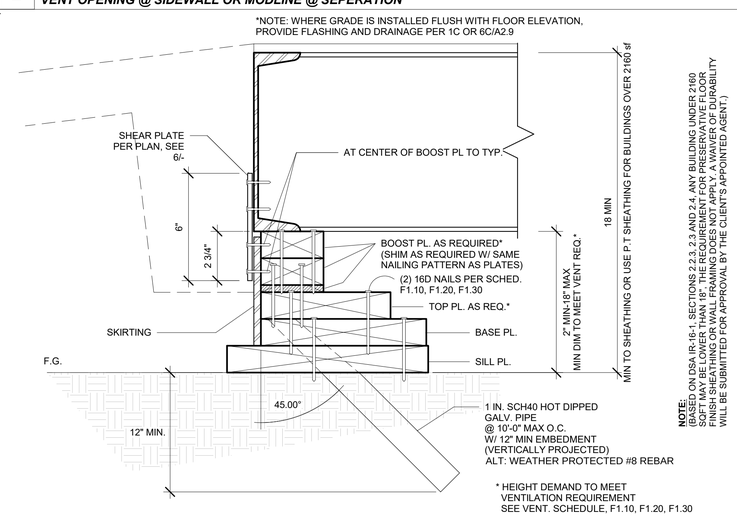

NOTE:
(BASED ON DSA IR-16-1, SECTIONS 2.2.3 AND 2.4, ANY BUILDING UNDER 2160 SQFT MAY BE LOWER THAN 18". THE REQUIREMENT FOR PRESERVATIVE FLOOR FINISH SHEATHING OR WALL FRAMING DOES NOT APPLY. A WAIVER OF DURABILITY WILL BE SUBMITTED FOR APPROVAL BY THE CLIENT'S APPOINTED AGENT.)

5 *3" = 1'-0"*
SILL PLATE PROFILE

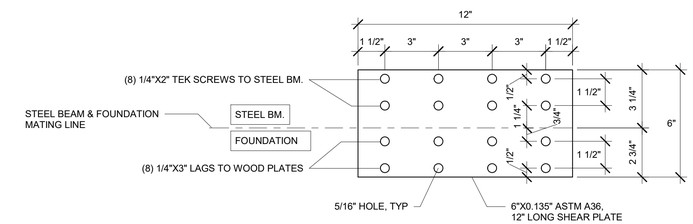

6 *3" = 1'-0"*
SHEAR PLATE

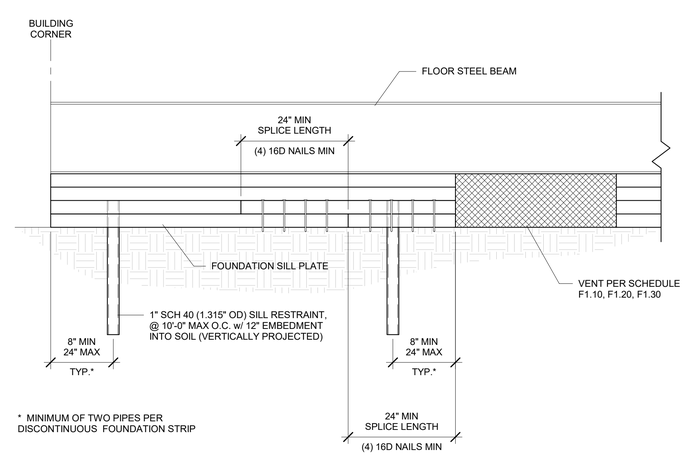

7 *1 1/2" = 1'-0"*
Splice at Sills

PROJECT SPECIFIC STATE AGENCY APPROVAL

IDENTIFICATION STAMP
DIV. OF THE STATE ARCHITECT
APP: 02-123433 INC:
REVIEWED FOR
SS ☑ FLS ☑ ACS ☑
DATE: 01/20/2026

R&S TAVARES ASSOCIATES
DESIGN ♦ CONSULTING ♦ PROJECT MGT
11590 W BERNARDO COURT, SUITE 100
SAN DIEGO, CA 92127
WWW.RSTAVARES.COM

PROFESSIONAL STAMP

REGISTERED PROFESSIONAL ENGINEER
MANNY D. FRANCISCO
C 63380
03/31/24
CIVIL STRUCTURAL
STATE OF CALIFORNIA
RST#22088
02/16/24

THE PLANS, IDEAS & DESIGNS SHOWN ON THESE DRAWINGS ARE THE PROPERTY OF R&S TAVARES ASSOCIATES, INC. DEVISED SOLELY FOR THIS CONTRACT. THESE PLANS SHALL NOT BE USED, IN WHOLE OR IN PART, FOR ANY PURPOSE FOR WHICH THEY WERE NOT INTENDED WITHOUT THE EXPRESS WRITTEN CONSENT OF R&S TAVARES ASSOCIATES, INC. ©

CLIENT

Class Leasing
1651Juanita Street, San Jacinto, CA 92583
Voice (951) 943-1908 Fax (951)943-5768

ORIGINAL PC STATE AGENCY APPROVAL

APPROVED
DIV. OF THE STATE ARCHITECT
APP: 04-123059 PC
REVIEWED FOR
SS ☑ FLS ☑ ACS ☑ CG ☑
DATE: 02/20/2024

Revision Schedule

#	Description	Date

PRE-CHECK (PC) DOCUMENT

Code: 2022 CBC

A separate project application for construction is required

PROJECT TITLE
PC 2022 CBC:24' x 40' EXPANDABLE TO 120' x 40'

SHEET TITLE
WOOD FOUNDATION DETAILS

PROJECT NUMBER
22088

DRAWN BY
rMc/SC

CHECKED BY
JA/RT

DATE

SHEET NO.
F1.40

SHEET OF

STRUCTRUAL STEEL:

A. ALL WORK, UNLESS MODIFIED BY THE CONCTRACT DOCUMENTS, SHALL BE PERFORMED IN ACCORDANCE WITH CURRENT AISC SPECIFICATIONS AND STANDARDS.
B. STEEL SHAPES SHALL COMFORM TO THE FOLLOWING STANDARD:
   a. STRUCTURAL HSS COLUMNS: ASTM A500 GRADE B
   b. STRUCTURAL W-SHAPES: ASTM A992 GRADE 50
   c. TUBE STEEL: ASTM A500 GRADE A
   d. ALL OTHER: ASTM A36

C. FABRICATION, ERECTION, AND SHOP PAINTING SHALL BE IN ACCORDANCE WITH THE PROVISIONS OF THE AISC *CODE OF STANDARD PRACTICE FOR STEEL BUILDING AND BRIDGES*.
D. HOLES IN STRUCTURAL STEEL SHALL NOT BE PERMITTED, UNLESS SPECIFIED IN THE STRUCTURAL DRAWINGS

CONCRETE

A. ALL CONCRETE WORK, UNLESS MODIFIED BY CONTRACT DOCUMENTS, SHALL BE PERFORMED IN ACCORDANCE WITH CHAPTER 19A, CBC 2022 AND ACI 318-19.

B. TESTS AND INSPECTION SHALL BE PERFORMED BY A TESTING LABORATRY CONTRACTED BY THE DISTRICT.

C. MIX DESIGN SHALL BE SUBMITTED FOR QUALIFICATION AND PROVIDE A 28-DAY COMPRESSIVE STRENGTH F'C OF 3500 PSI, COMPOSED OF NORMAL WEIGHT TYPE I PORTALAND CEMENT IN CONFORMANCE WITH ASTM C150.

D. FORMWORK SHALL RESULT IN FINAL STRUCTURE THAT CONFORMS TO SHAPES, LINES, AND DIMENSIONS AS REQUIRED BY THE CONTRACT DOCUMENTS.

E. LOCATIONS OF VENTS AND OPENINGS FOR MECHANICAL AND ELECTRICAL USE SHALL BE VERIFIED BY ARCHITECT.

F. EMBEDMENT OF MATERIALS NOT HARMFULL TO CONCRETE AND WITHIN LIMITATIONS OF SECTION 20.6, ACI-318-19 SHALL BE PERMITTED. REFER TO OTHER DISCIPLINES FOR LOCATION OF CONDUIT, PIPES, FITTINGS, SLEEVES, ETC.

G. CONTINUOUS BATCH PLANT INSPECTION WAIVED PER CBC 1705A3.3. WHEN CONTINUOUS BATCH PLANT INSPECTION IS WAIVED, THE FOLLOWING PERIODIC INSPECTION SHALL BE REQUIRED:(INSPECTIONS PROVIDED BY DISTRICT)

   1. QUALIFIED TECHNICIAN OF THE TESTING LABORATORY SHALL CHECK THE FIRST BATCH AT THE START OF THE DAY.
   2. LICENSED WEIGHMASTER TO POSITIVELY IDENTIFY MATERIALS AS TO QUANTIFY AND CERTIFY TO EACH LOAD BY A BATCH TICKET.
   3. BATCH TICKETS, INCLUDING MATERIAL QUANTITIES AND WEIGHTS SHALL ACCOMPANY THE LOAD, SHALL BE TRANSMITTED TO THE INSPECTOR OF RECORD BY A TRUCK DRIVER WITH THE LOAD IDENTIFIED THEREON. THE LOAD SHALL NOT BE PLACED WITHOUT A BATCH TICKET IDENTIFYING THE MIX. THE INSPECTOR WILL KEEP A DAILY RECORD OF PLACEMENTS, IDENTIFYING EACH TRUCK, ITS LOAD, AND TIME OF RECEIPT, AND APPROXIMATE LOCATION OF DEPOSIT IN THE STRUCTURE AND WILL TRANSMIT A COPY OF THE DAILY RECORD TO THE ENFORCEMENT AGENCY.

H. ANCHOR BOLTS, AND REINFORCING STEEL SHALL BE SECURELY TIED BEFORE CONCRETE IS POURED.

CONCRETE MIX

IN ADDITION TO THOSE REQUIREMENTS DICTATED BY THE PC DESIGN, THE CONCRETE MIX USED IN THE FOUNDATION ELEMENTS SHALL COMPLY WITH THE DURABILITY REQUIREMENTS OF AMERICAN CONCRETE INSTITUTE (ACI) 318 SECTION 19.3. THE PC DRAWINGS SHALL ACCOUNT FOR THE DEPENDENCY OF THESE DURABILITY REQUIREMEMNTS ON SITE-SPECIFIC CHARACTERISTICS.

A. WHEN THE PC DRAWINGS DO NOT REQUIRE A SITE-SPECIFIC GEOTECHNICAL REPORT THAT QUANTIFIES SULFATE CONTENT IN THE SOIL, THE PC DRAWINGS SHALL REQUIRE A CONCRETE MIX SHALL COMPLYING WITH ONE OF THE FOLLOWING PER ACI 318 TABLE 19.3.2.1. SEE THIS SHEET A.1 & A.2 FOR OPTIONS

B. MAXIMUM WATER/CEMENT RATION OF 0.45; MINIMUM COMPRESSIVE STRENGTH OF 4,500 POUNDS PER SQUARE INCH (PSI); TYPE V CEMENT PLUS POZZOLAN OR SLAG CEMENT COMPLYING WITH FOOTNOTE 7; AND PROHIBITION OF ADMIXTURES CONTAINING CALCIUM CHLORIDE

C. MAXIMUM WATER/CEMENT RATIO OF 0.40; MINIMUM COMPRESSIVE STRENGTH OF 5,000 PSI; TYPE V CEMENT COMPLYING WITH FOOTNOTE 8; AND PROHIBITION OF ADMIXTURES CONTAING CALCIUM CHLORIDE.

D. WHEN THE PC DRAWINGS REQUIRE A SITE-SPECIFIC GEOTECHNICAL REPORT THAT QUANTIFIES SULFATE CONTENT IN THE SOIL, THE PC DRAWINGS SHALL CLEARLY STATE THE EXPOSURE CLASS FOR EACH CATAGORY (I.E., F, S, W, AND C) OR COMBINATION THEREOF THE PC DESIGN IS APPROVED FOR. THE MAXIMUM WATER/CEMENT RATIO, MINIMUM COMPRESSIVE STRENGTH, CEMENTITOUS MATERIAL REQUIREMENTS, AND ADMIXTURE LIMITATIONS SHALL BE STATED ON THE PC DRAWINGS FOR EACH APPROVED CASE.

E. BOTH APPROACHES GIVEN SECTIONS 5.5.1 AND 5.5.2 ABOVE CAN BE INCLUDED ON THE PC DRAWINGS AS ALTERNATE OPTIONS IN ACCORDANCE WITH SECTION 1.4 ABOVE

F. CONCRETE EXPOSE TO THAW AND FREEZE CYCLES SHALL BE AIR ENTRAINED PER ACI 318 SECTION 19.3.3.1

STEEL REINFORCEMENT

A. DEFORMED BARS SHALL CONFORM TO ASTM A615.
B. fy= 60,000 PSI, FOR ALL BARS EXEPT FOR #3 BARS, fy= 40,000 PSI.
C. PROVIDE A MINIMUM CONCRETE COVER FOR REINFORCEMENT EMBEDDED IN:
   a. CONCRETE CAST AGAINST AND PERMANENTLY EXPOSED TO EARTH = 3"
   b. CONCRETE EXPOSED TO EARTH OR WEATHER FOR #5 BARS OR SMALLER = 1.5"
D. SPLICE LENGTHS SHALL BE A MINIMUM OF 48" FOR #5 BARS, AND 30" FOR #4 BARS UNLESS OTHERWISE SPECIFIED IN DRAWINGS.

BOLTS

A. ALL BOLTS AND ANCHOR BOLTS SHALL COMFORM TO ASTM A-307
B. BOLTS EXPOSED TO THE ELEMENTS SHALL BE GALVANIZED BY THE HOT-DIP OR MECHANICAL PROCESS

WELDING

A. ALL WELDING SAHLL BE IN COMFORMANCE TO:
   a. AWS D1.1, EXCEPT AS MODIFIED IN SECTION J2, AISC-360 FOR STEEL
   b. AWS D1.3 FOR LIGHT GAUGE STEEL
   c. AWS D1.4 FOR REINFORCING STEEL

B. ELECTRODE CLASSIFICATION:
   a. E70XX FOR STEEL AND CONCRETE STEEL REINFORCEMENT
   b. E60XX FOR LIGHT GAUGE STEEL

C. WELDS SHALL BE CAPABLE OF PRODUCING THE FOLLOWING V-NOTCH TOUGHNESS AS DETERMINED BY APPROPRIATE AWS A5 CLASSIFICATION TEST METHOD OR MANUFACTURER CERTIFICATION:
   a. LATERAL FORCE RESISTING SYSTEM (LFRS) = 20 FT-LB AT 0 DEGREE F
   b. COMPLETE JOINT PENETRATION GROOVE WELD = 20 FT-LB AT 40 DEGREE F

D. SHOP AND FIELD WELDING SHALL BE PERFORMED BY AWS CERTIFIED WELDERS.

E. INSPECTION:
   a. PERIODIC INSPECTION OF FILLET WELDS LESS THAN OR EQUAL TO 5/16", FLOOR AND ROOF DECK WELDS.
   b. CONTINUOUS INSPECTION FOR OTHER WELDS.

F. NONDESTRUCTIVE TESTING (NDT):
   a. ULTRASONIC TESTING SHALL BE PERFORMED ON 100 PERCENT OF CJP GROOVE WELDS IN MATERIALS 5/16" OR THICK OR GREATER. ULTRASONIC TESTING NOT REQUIRED FOR MATERIALS LESS THAN 5/16" THICK. TESTING FREQUENCY MAY BE REDUCED TO 25%, PROVIDED PROVISIONS SET FORTH IN SECTION N5.5e, AISC-360 IS MET.
   b. MAGNETIC PARTICLE TESTING SHALL BE PERFORMED ON 25 PERCENT OF ALL BEAM-TO-COLUMN CJP GROOVE WELDS. TESTING FREQUENCY MAY BE REDUCED TO 10%, PROVIDED PROVISIONS SET FORTH IN J6.2g, AISC-341 IS MET.

FOUNDATIONS

GEOTECHNICAL INVESTIGATION SHALL BE CONDUCTED IN ACCORDANCE WITH SECTION 1803A.1 THROUGH 1803A.8 BY GEOTECHNICAL ENGINEER CONTRACTED BY THE DISTRICT. ALLOWABLE FOUNDATION AND LATERAL SOIL PRESSURE VALUES MAY BE DETERMINED FROM TALBLE 1806A.2, WHERE GEOTECHNINCAL REPORTS IS NOT REQUIRED PER SECT 1803A.2. A MAXIMUM ALLOWABLE SOIL PRESSURE OF 1000 PSF AND 1500 PSF SHALLBE PERMITTED FOR TEMPORARY W AND PERMANENT CONCRETE FOUNDATIONS RESPECTIVELY IN ACCORDANCE WITH SECTION 4.6, IR 16-1

A PREVIIOUS REPORT FOR A SPECIFIC SITE MAY BE RESUBMITTED. THE ALLOWABLE FOUNDATIONA AND LATERAL SOIL PRESSURE VALUES ARE ALLOWED A 33% INCREASE FOR SHORT TERM WIND AND SEIMIC LOADS.

THE DISTRCT SHALL BE RESPONSIBLE FOR EXCAVATION, BACKFILL, SETTING ELEVATIONS, CRANING AND RIGGING. PROVIDE SHIMS TO LEVEL BUILDING WITHIN 1/2" TOLERANCE.

COLD-FORMED STEEL:

A. ALL WORK SHALL, UNLESS MODIFIED BY THE CONCTRACT DOCUMENTS, SHALL BE PERFORMED IN ACCORDANCE WITH CURRENT AISI SPECIFICATIONS AND STANDARDS.

B. MATERIAL SPECIFICATION:
   a. ASTM A-1011/A, GRADE 33 FOR MATERIALS THICKNESS 0.120 OR LESS UNLESS OTHERWISE NOTI
   b ASTM A-1003, GRADE 33 TYPE H FOR LIGHT GUAGE STUDS AND TRACKS
   c. SHAPES SHALL BE DIMENSIONED TO SSMA SPECIFICATIONS.

C. SCREWS EXPOSED TO THE ELEMENTS SHALL BE GALVANIZED

STEEL DECK

MINIMUM THICKNESS PERMITTED FOR FLOOR STEEL DECKING IS 20GA. PER DSA IR 16-1, 1.2.1, MINIMUM THICKNESS OF NON-STRUCTURAL STEEL ROOF DECKING OR DSA STANDING SEAM ROOF PANELS ARE GRADE 40 SHEET STEEL WITH ALUMINUM ZINC COATING CONFORMING TO ASTM A792 AND AZ55.

CHANGES

CHANGES AFFECTING STRUCTURAL PORTION OF THE APPROVED PC SHALL NEED DSA APPROVAL AND SHALL BE CLASSIFIED AS CCD CATEFORY A.

WOOD

ALL FRAMING LUMBER SHALL BE GRADE MARKED BY AN APPROVED GRADING AGENCY

SHEATHING:

EACH SHEET SHALL BE GRADE MARKED BY THE AMERICAN PLYWOOD ASSOCIATION IN ACCORDANCE WITH THE PROCEDURES AND QUALIFICATIONS SET FORTH BY PS 1-19.

1. SUB FLOOR: 1 1/8" T&G UNBLOCKED PLYWOOD, SHALL PROVIDE A SMOOTH AND UNIFORM SURFACE

   CAPABLE OF ACCEPTING CARPET FINISH
2. PLYWOOD ROOF DECK OPTION: APA RATED 3/4" T&G OSB OR EQUIVALENT RATED SHEATHING
3. EXTERIOR WALL SIDING:
   I. STANDARD: 5/8" DURATEMP OR 5/8" SMART PANEL
   II. OPTION: 5/8" MOD
   III. OPTION: 1/2" OSB OR CDX PLYWOOD FOR PLASTER/STUCCO FINISH
   IV. OPTION: 1/2" OSB OR CDX PLYWOOD FOR HARDIE BOARD (LAP SIDING) FINISH

4. EXTERIOR WALL SIDING ATTACHMENT:

   FASTENERS USED FOR THE ATTACHMENT OF EXTERIOR WALL COVERINGS SHALL BE HOT-DIPPED GALVANIZED, MECHANICALLY DEPOSITED ZINC-COATED, STAINLESS, SILICON BRONZE OR COPPER PER CBC SECTION 2304.10.1.1

   FASTEN TO WOOD FRAMING WITH 8D BOX NAILS @ 6" E.N., 12" F.N.
   FASTEN TO LIGHT GAGE METAL FRAMING WITH #8 WAFER HEAD STSMS @ 6" E.N., 12" F.N.
   FASTEN TO STRUCTURAL STEEL WITH #12 STSMS OR 0.145 DIAM SHOT PINS @ 12" O.C.

TREATED WOOD:

ALL WOOD LOCATED WITHIN 6" OF EXPOSED EARTH SHALL BE "PRESERVATIVE TREATED" OR SHALL BE "NATURALLY DURABLE" MATERIAL IN ACCORDANCE WITH CBC SECTION 2304.12.1.2.
1. ALL ROUGH LUMBER SHALL BE DF #2 OR BETTER.
2. ALL POWER DRIVEN FASTENERS SHALL BE HILTI FASTENERS ICC# ESR-1663, AND RAMSET POWER DRIVEN FASTENERS (ICC # ESR-1799), OR SIMPSON POWER DRIVEN FASTENERS ICC #ESR-2138, OR OTHER EQUIVALENT PRODUCTS WITH ICC REPORTS AND APPROVED BY DSA.
3. FASTENERS, INCLUDING NUTS AND WASHERS, IN CONTACT WITH PRESERVATIVE-TREATED WOOD SHALL BE OF HOT-DIPPED ZINC-COATED GALVANIZED STEEL, STAINLESS STEEL, SILICON BRONZE OR COPPER PER CBC 2304.10.1.1

ROOF DIAPHRAGM:

3/4" T&G RATED SHEATHING UNBLOCKED DIAPHRAGM, EXPOSURE 1, 48/24 SPAN RATING
FASTEN AT METAL SUPPORTS W/ #10 x 1 1/4" SELF-TAPPING PHILLIPS FLAT-HEAD ZINC COATED TEKS SCREWS @ 6" BN/CON. EDGE, 6" EN, AND 12" O.C. FN. PROVIDE A MINIMUM OF 3/8" EDGE DISTANCE FOR FASTENERS TO PLYWOOD EDGE PER CBC SECTION 2306.2.
NOTE: ALL PANEL EDGES SHALL BE ATTACHED TO FRAMING MEMBERS OR BLOCKING. WHERE USED AS BLOCKING, FLAT STRAPPING SHALL BE A MINIMUM THICKNESS OF 33MILS WITH A MINIMUM WIDTH OF 1.5 INCHES AND SHALL BE EITHER INSTALLED BELOW SHEATHING. FOR OTHER THAN STEEL SHEATHING, THE SCREWS SHALL BE INSTALLED THROUGH THE SHEATHING TO THE BLOCKING.

FLOOR DIAPHRAGM:

1 1/8" PLYWOOD UNBLOCKED DIAPHRAGM - STURD-I-FLOOR T&G RATED SHEATHING, EXTERIOR, 48" oc SPAN RATING
FASTEN AT METAL SUPPORTS W/ #10 - 24 x 2" SELF-TAPPING PHILLIPS FLAT-HEAD ZINC COATED TEKS @ 6" O.C. BN/CON. EDGE, 6" O.C. EN, 12" FN. PROVIDE A MINIMUM OF 3/8" EDGE DISTANCE FOR FASTENERS TO PLYWOOD EDGE PER CBC SECTION 2306.2
NOTE: ALL PANEL EDGES SHALL BE ATTACHED TO FRAMING MEMBERS OR BLOCKING. WHERE USED AS BLOCKING, FLAT STRAPPING SHALL BE A MINIMUM THICKNESS OF 33MILS WITH A MINIMUM WIDTH OF 1.5 INCHS AND SHALL BE EITHER INSTALLED BELOW SHEATHING. FOR OTHER THAN STEEL SHEATHING, THE SCREWS SHALL BE INSTALLED THROUGH THE SHEATHING TO THE BLOCKING.

CONCRETE FLOOR DATA: LIGHTWEIGHT CONCRETE FLOOR
STRENGTH: 3500 PSI
TYPE: I OR II
DESINTY: 110 PCF - MAX

DIMENSION LUMBER ATTACHMENT TO STEEL FRAMING:

2 x STUDS AT CORNER STEEL COLUMNS (NAILING STUD)
USE: #10 - 24 x 2 1/2" LG. SELF-DRILLING SELF-TAPPING PHILLIPS FLAT-HEAD WITH WASHER ZINC COATED TEK SCREWS AT 24" OC.

NAILING NOTES:

1. ALL NAILS SHALL BE COMMON UNLESS OTHERWISE NOTED
2. MACHINE APPLIED 16d FASTENERS SHALL HAVE AN EMBEDMENT OF NOT LESS THAN 1 1/2" INTO THE SECOND MEMBER, AND SHALL NOT BE LESS THAN 3" IN OVERALL LENGTH.
3. NAILS SHALL BE ACCEPTABLE FOR HAND NAILING, PROVIDED THE REQUIREMENT EMBEDMENT IS MAINTAINED

CONNECTIONS AND FASTENERS:

ALL CONNECTIONS AND FASTENERS IN DRAWINGS CAN BE SUBSTITUTED BY AN EQUIVALENT PRODUCT PROVIDING REPORTS ARE SUBMITTED TO AND APPROVED BY DSA.

CONNECTIONS LAG SCREWS:

LAG SCREWS SHALL BE INSTALLED WITH WASHER AND TURNED BY WRENCH, OVER-TORQUING SHALL BE AVOIDED. PRE-DRILLED CLEARANCE AND LEAD HOLE SHALL BE REQUIRED AS DESCRIBED BELOW:

a) THE CLEARANCE HOLE FOR THE UNTHREADED PORTION OR THE SHANK SHALL HAVE SAME DEPTH AND DIAMETER.

b) THE LEAD HOLE FOR THE THREADED PORTION OF THE SHANK SHALL HAVE SAME DEPTH AND
   65% TO 85% OF SHANK DIAMETER FOR LUMBER WITH SPECIFC GRAVITY OF, G > 0.6
   60% TO 75% OF SHANK DIAMETER FOR LUMBER WITH SPECIFC GRAVITY OF, 0.5 < G ≤ 0.6
   40% TO 70% OF SHANK DIAMETER FOR LUMBER WITH SPECIFC GRAVITY OF, G ≤ 0.5

LEAD OR CLEARANCE HOLES SHALL NOT BE REQUIRED FOR 3/8" DIAMETER OR SMALLER LAG SCREWS.

NAILING SCHEDULE: (ALL NAILS SHALL BE COMMON OR BOX NAILS, GALVANIZED WHERE EXPOSED) PER CBC TABLE 2304.10.2

CONNECTION	COMMON FASTENERS	BOX NAIL FASTENERS	LOCATION
	QTY SIZE SPACING O.C.	QTY SIZE SPACING O.C.	
1. JOIST TO SILL OR GIRDER	3- 8d	3- 10d	TOENAIL
2. BRIDGING TO JOIST	2- 8d	2- 10d	TOENAIL EA. END
1X6 OR LESS SUBFLOOR TO			
3. EA. JOIST	2- 8d	2- 10d	FACE NAIL
WIDER THAN 1X6 SUBFLOOR			
4. TO EA. JOIST	3- 8d	3- 10d	FACE NAIL
5. 2" SUBFLOOR TO JOIST	2- 16d	N/A N/A N/A	BLIND & FACE NAIL
SOLE PLT. TO JOIST OR BLK'G			
6. TO EA. JOIST	16d @ 16"	16d @ 12"	FACE NAIL
SOLE PLT. TO JOIST OR BLK'G			
@ BRACED WALL PANEL	3- 16d @ 16"	3- 16d @ 16"	TYP. FACE NAIL
7. TOP PLT. TO STUD	2- 16d	3- 10d	END NAIL
8. STUD TO SOLE PLT.	2- 16d	3- 10d	END NAIL
OR	4- 8d	4- 10d	TOENAIL
9. DOUBLE STUDS	16d @ 24"	10d @ 16"	FACE NAIL
10. DOUBLE TOP PLT.	16d @ 16"	10d @ 12"	TYP. FACE NAIL
DOUBLE TOP PLT.	8- 16d MIN. U.N.O.	12- 10d	24" MIN LAP SPLICE
BLKG. BTW. JOIST OR			
11. RAFTERS TO TOP PLT.	3- 8d	3- 10d	TOENAIL
12. RIM JOIST TO TOP PLT.	8d @ 6"	10d @ 6"	TOENAIL
TOP PLT., LAPS &			
13. INTERSECTIONS	2- 16d	3- 10d	FACE NAIL
14. CONT. HDR. 2 PIECES	16d @ 16"		ALONG EDGE
15. CLG. JOIST TO PLT.	3- 8d	3- 10d	EA. JOIST, TOENAIL
16. CONT. HDR. TO STUD	4- 8d	4- 10d	TOENAIL
CLG. JOIST LAP OVER			
17. PARTITIONS	3- 16d	4- 10d	FACE NAIL
CLG. JOIST PARALLEL TO			
18. RAFTERS	3- 16d	SEE TABLE 2308.7.3.1	FACE NAIL
19. RAFTER TO PLT.	3- 8d	3- 16d	TOENAIL[c]
1" DIA. BRACE TO EZ. STUD &			
20. PLT.	2- 8d	2- 10d	FACE NAIL
21. 1X8 SHT'G. TO EA. BRG.	3- 8d	3- 10d	FACE NAIL
WIDER THAN 1X8 SHT'G TO			
22. BRG.	3- 8d	3- 10d	FACE NAIL
23. BUILT-UP CORNER STUDS	16d @ 24"		FACE NAIL
			FACE NAIL @ TOP & BTM. STAGR.
24. BUILT-UP GIRDERS & BEAMS	20d @ 32"	10d @ 24"	ON OPP. SIDES
	2- 20d	N/A N/A N/A	FACE NAIL @ ENDS & @ EA. SPLICE
25. 2" PLANKS	2- 16d	N/A N/A N/A	@ EA. BRG.
26. COLLAR TIE TO RAFTER	3- 10d	4- 10d	FACE NAIL
27. JACK RAFTER TO HIP	3- 10d	4- 16d	TOENAIL
28. ROOF RAFTER TO 2X RIDGE	2- 16d	3- 10d	END NAIL
29. JOIST TO BAND JOIST	3- 16d	3- 10d	END NAIL
30. 4X BLOCKING TO STUDS	1- A34	N/A N/A N/A	FACE NAIL
OR	4- 8d	4- 10d	TOENAIL

A.) NAILS SPACED AT 6 INCHES AT INTERMEDIATE SUPPORTS WHERE SPANS ARE 48 INCHES OR MORE. FOR NAILING OF WOOD STRUCTURAL PANEL AND PARTICLEBOARD DIAPGHRAMS AND SHEAR WALLS, REFER TO SECTION 2305 NAILS. FOR WALL SHEATHING ARE PERMITTED TO BE COMMON, BOX OR CASING.
B.)SPACING SHALL BE 6 INCHES ON CENTER ON THE EDGES AND 12 INCHES ON CENTER AT INTERMEDIATE SUPPORTS FOR NONSTRUCTURAL APPLICATIONS. PANEL SUPPORTS AT 36 INCHES (20 INCHES IF STRENGTH AXIS IN THE LONG DIRECTION OF THE PANEL, UNLESS OTHERWISE MARKED).
C.) WHERE A RAFTER IS FASTENED TO AN ADJACENT PARALLEL CEILING JOIST IN ACCORDANCE WITH THIS SCHEDULE AND THE CEILING JOIST IS FASTENED TO THE TOP PLATE IN ACCORDANCE WITH THIS SCHEDULE, THE NUMBER OF TOENAILS IN THE RAFTER SHALL BE PERMITTED TO BE REDUCED BY ONE NAIL.

D.) RSRS-01 IS A ROOF SHEATHING RING SHANK NAIL MEETING THE SPECIFICATIONS IN ASTM F1667

DECIMAL AND GAUGE CHARTS

FRACTION	DECIMAL
1/32	0.03125
1/16	0.0625
3/32	0.09375
1/8	0.125
5/32	0.15625
3/16	0.1875
7/32	0.21875
1/4	0.25
9/32	0.28125
5/16	0.3125
11/32	0.34375
3/8	0.375
13/32	0.40625
7/16	0.4375
15/32	0.46875
1/2	0.5
17/32	0.53125
9/16	0.5625
19/32	0.59375
5/8	0.625
21/32	0.65625
11/16	0.6875
23/32	0.71875
3/4	0.75
25/32	0.78125
13/16	0.8125
27/32	0.84375
7/8	0.875
29/32	0.90625
15/16	0.9375
31/32	0.96875
1	1

PENNY	GAUGE	DEC.
60d, 40d	4	0.2242
30d	5	0.2092
20d	6	0.1943
	7	0.1793
16d	8	0.1644
12d, 10d	9	0.1495
8d	10	0.1345
6d	11	0.1196

12" = 1'-0"
STRUCTURAL NOTES

PROJECT SPECIFIC STATE AGENCY APPROVAL
IDENTIFICATION STAMP
DIV. OF THE STATE ARCHITECT
APP: 02-123433 INC:
REVIEWED FOR
SS ☑ FLS ☑ ACS ☑
DATE: 01/20/2026

R&S TAVARES ASSOCIATES
DESIGN ★ CONSULTING ★ PROJECT
11777 BERNARDO PLAZA COURT, SUITE 105
SAN DIEGO, CA 92128

PROFESSIONAL STAMP
REGISTERED PROFESSIONAL ENGINEER
MANNY D. FRANCISCO-TAVARES
No. 63380
Exp. 03/31/24
STRUCTURAL
STATE OF CALIFORNIA
RST#22088
02/16/24

THE PLANS, IDEAS & DESIGNS SHOWN ON THESE DRAWINGS ARE THE PROPERTY OF R&S TAVARES ASSOCIATES, INC. DEVISED SOLELY FOR THIS CONTRACT. THESE PLANS SHALL NOT BE USED, IN WHOLE OR IN PART, FOR ANY PURPOSE FOR WHICH THEY WERE NOT INTENDED WITHOUT THE EXPRESS WRITTEN CONSENT OF R&S TAVARES ASSOCIATES, INC. ©

CLIENT
Class Leasing
1651Juanita Street, San Jacinto, CA 92583
Voice (951) 943-1908 Fax (951)943-5768

ORIGINAL PC STATE AGENCY APPROVAL
APPROVED
DIV. OF THE STATE ARCHITECT
APP: 04-123059 PC
REVIEWED FOR
SS ☑ FLS ☑ ACS ☑ CG ☑
DATE: 02/20/2024

Revision Schedule

#	Description	Date

PRE-CHECK (PC) DOCUMENT

Code: 2022 CBC

A separate project application for construction is required

PROJECT TITLE
PC 2022 CBC: 24' x 60' EXPANDABLE TO 72' x 60'

SHEET TITLE
STRUCTURAL GEN NOTES

PROJECT NUMBER
22088

DRAWN BY
rMc/SM

CHECKED BY
JA/RT

DATE

SHEET NO.
S0.1

SHEET OF

6/16/2021 7:18:48 AM C:\Users\User\Documents\20133 - Aries, 24x60 PC -High Seismic MainFile_detached_CESAR24D63.rvt

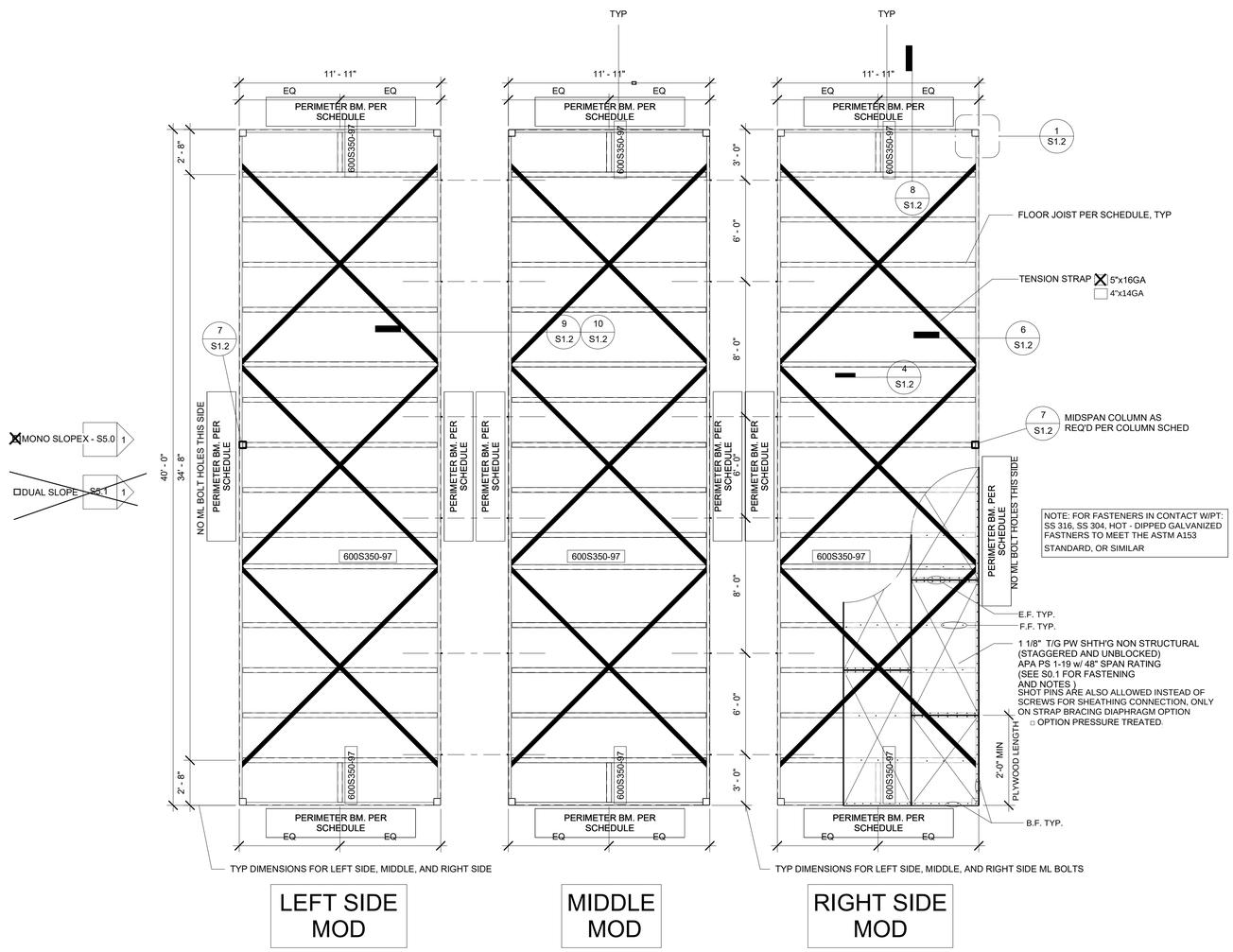

NOTE: FOR FASTENERS IN CONTACT W/PT: SS 316, SS 304, HOT - DIPPED GALVANIZED FASTNERS TO MEET THE ASTM A153 STANDARD, OR SIMILAR

MONO SLOPE X - S5.0 1

DUAL SLOPE - S5.1 1

1 *1/4" = 1'-0"*
WD Shth'g Flr Framing Plan (50+15 PSF) CROSS-STRAP OPT.

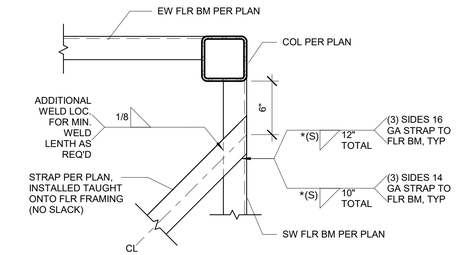

2 *1 1/2" = 1'-0"*
FLOOR BRACING STRAP @ ENDWALL

* SIZE OF WELD (S) = THICKNESS OF THINER MATERIAL

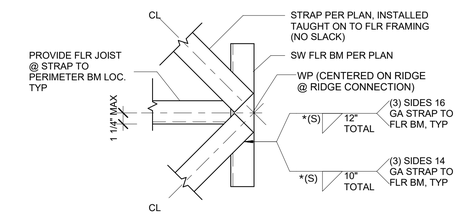

3 *1 1/2" = 1'-0"*
FLOOR STRAP BRACING @ SIDEWALL

* SIZE OF WELD (S) = THICKNESS OF THINER MATERIAL

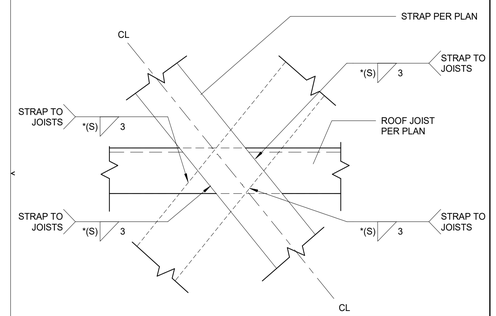

4 *3" = 1'-0"*
STRAP TO JOIST CONNECTION

* SIZE OF WELD (S) = THICKNESS OF THINER MATERIAL

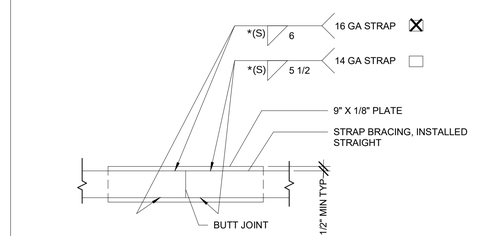

5 *1 1/2" = 1'-0"*
STRAP SPLICE DETAIL

* SIZE OF WELD (S) = THICKNESS OF THINER MATERIAL

NOTE: ALL PANEL EDGES SHLL BE ATTACHED TO FRAMING MEMBERS OR BLOCKING. WHERE USED AS BLOCKING, FLAT STRAPPING SHALL BE A MINIMUM THICKNESS OF 33MILS WITH A MINIMUM WIDTH OF 1.5 INCHES AND SHALL BE INSTALLED BELOW SHEATHING. FOR OTHER THAN STEEL SHEATHING, THE SCREWS SHALL BE INSTALLED THROUGH THE SHEATHING TO THE BLOCKING.

Floor Joist Schedule		
FLL	JOIST	SPACING
X 50+15 PSF[1]	600S350-97	32" O.C.
☐ 100 PSF[1]	600S350-97	24" O.C.
☐ 150 PSF[2]	600S350-97	16" O.C.

FOOTNOTES:
1. APPLICABLE FOR OCCUPANCY E
2. APPLICABLE FOR OCCUPANCY E &B

Perimeter Floor Beam Schedule			
HT	No Plaster Walls	Plaster Walls	w/ Parapet, 18" max
X 9'	C10x15.3	C10x15.3	C10x15.3
☐ 10'	C10x15.3	C10x15.3	C10x15.3

NOTE: SPLICE AT FLOOR BEAM PERMITTED PER 3/S1.2

Column Schedule			
HT	No Plaster Walls	Plaster Walls	w/ Parapet, 18" max
X 9'	5x5x1/4	5x5x1/4	6x6X1/4
☐ 10'	6x6x1/4	6x6X1/4	6x6X1/4
			3x3X3/16 mid-span column

PROJECT SPECIFIC STATE AGENCY APPROVAL

IDENTIFICATION STAMP
DIV. OF THE STATE ARCHITECT
APP: 02-123433 INC:
REVIEWED FOR
SS ☑ FLS ☑ ACS ☑
DATE: 01/20/2026

R&S TAVARES ASSOCIATES
DESIGN ♦ CONSULTING ♦ PROJECT
11590 W. BERNARDO COURT, SUITE 100
SAN DIEGO, CA 92127
WWW.RSTAVARES.COM

PROFESSIONAL STAMP

REGISTERED PROFESSIONAL ENGINEER
MANNY D. FRANCISCO
C 63380
03/31/24
CIVIL STRUCTURAL
STATE OF CALIFORNIA
RST#22088
02/16/24

THE PLANS, IDEAS & DESIGNS SHOWN ON THESE DRAWINGS ARE THE PROPERTY OF R&S TAVARES ASSOCIATES, INC. DEVISED SOLELY FOR THIS CONTRACT. THESE PLANS SHALL NOT BE USED, IN WHOLE OR IN PART, FOR ANY PURPOSE FOR WHICH THEY WERE NOT INTENDED WITHOUT THE EXPRESS WRITTEN CONSENT OF R&S TAVARES ASSOCIATES, INC. ©

CLIENT

Class Leasing
1651Juanita Street, San Jacinto, CA 92583
Voice (951) 943-1908 Fax (951)943-5768

ORIGINAL PC STATE AGENCY APPROVAL

APPROVED
DIV. OF THE STATE ARCHITECT
APP: 04-123059 PC
REVIEWED FOR
SS ☑ FLS ☑ ACS ☑ CG ☑
DATE: 02/20/2024

REVISIONS

#	Description	BY

PRE-CHECK (PC) DOCUMENT

Code: 2022 CBC

A separate project application for construction is required

PROJECT TITLE
PC 2022 CBC:24' x 40' EXPANDABLE TO 120' x 40'

EL DORADO 160# SNOW LOAD

SHEET TITLE
WD SHTH'G FLR FRAMING PLAN CROSS-STRAP OPT.
50 + 15 PSF
100 PSF
150 PSF

PROJECT NUMBER
22073

DRAWN BY
Author

CHECKED BY
Checker

DATE
06/07/2021

SHEET NO.
S1.0.4

SHEET OF SHEETS

6/2/2022 9:46:43 AM \\192.168.10.2\Clients\2022\22073 - Class Leasing, El Dorado Cty OE - S Lake Tahoe MS 160lb Snow load\Main Files\REVIT\RST#22073 - Class Leasing, PC 24x40 to 120x40 HS_Eldorado Cty OE - 160# Snow Load_MainFile_detached.rvt

BH-36 METAL DECK PROPERTIES & PROFILE					
PLAN DESIGNATION	DECK TYPE	MINIMUM EFFECTIVE PROPERTIES			DECK PROFILE
		5/8" IN³/FT	3/4" IN³/FT	1" IN³/FT	1½" IN³/FT
	1-1/2"-18GA ASC BH-36 GALV. DECK (36" WIDE)	0.311	0.329	0.287	0.313

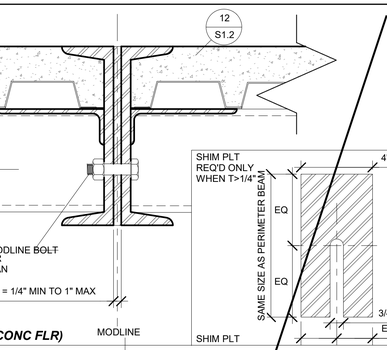

NOTE:
ASC STEEL DECKING: IAPMO UES ER #0329

- SIDE LAP ATTACHMENT TO BE BUTTON PUNCHED @ 24" O.C. WHEN WELDED
- SIDE LAP ATTACHMENT TO BE #10 SDSTS @ 24" O.C. WHEN SCREWED

20 *1 1/2" = 1'-0"*
BH-36 Metal Deck Properties & Profile

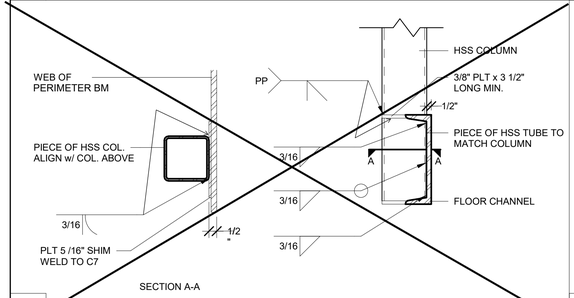

7 *1 1/2" = 1'-0"*
Mid-Span Column Connection

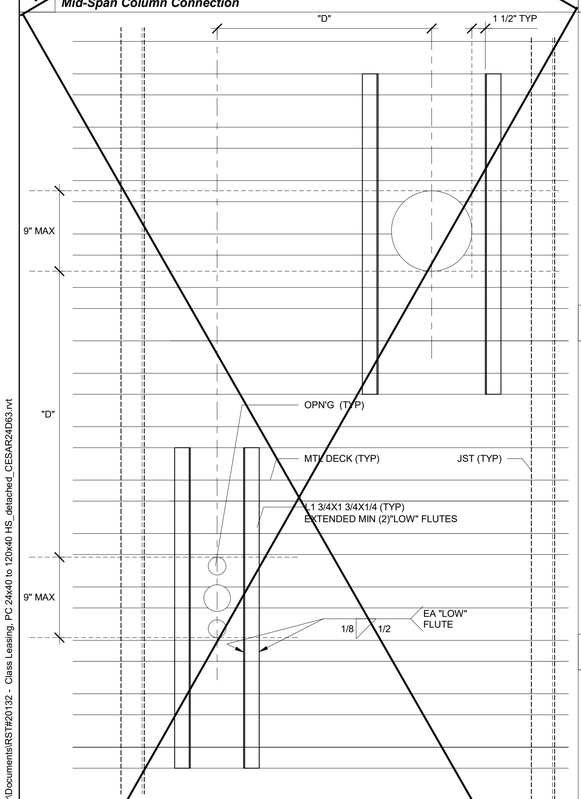

1. THIS DETAIL IS FOR USE ONLY FOR OPENINGS OR OPENING GROUPS THAT ARE 0'-9" OR SMALLER.

2. OPENINGS 2"Ø OR LESS NOT OCCURING IN THE LOWER FLUTE DO NOT REQUIRE REINFORCING AND MAY BE CORED THRU THE CONCRETE.

3. IF "D" IS LESS THAN 32" THEN THE GROUP OF OPENINGS MUST BE BLOCKED OUT WITH ADDITIONAL FRAMING.

4. PRIOR TO CONCRETE POUR, BLOCK OUT THE OPENINGS. AFTER THE CONCRETE HAS BEEN CURED THE DECK MAY BE CUT.

16 *1 1/2" = 1'-0"*
Typ Deck Penetrations (CONC FLR)

15 *3" = 1'-0"*
Flr @ ML w/ Shim (CONC FLR)

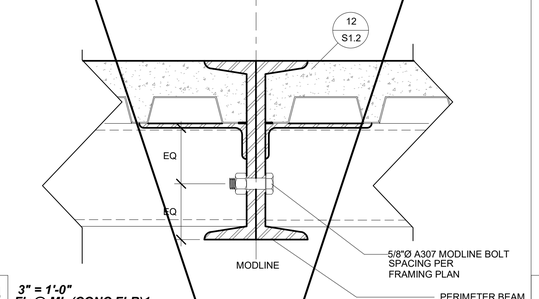

14 *3" = 1'-0"*
Flr @ ML (CONC FLR)1

* SIZE OF WELD (S) = THICKNESS OF THINER MATERIAL

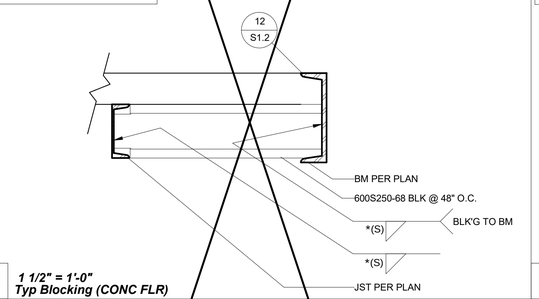

13 *1 1/2" = 1'-0"*
Typ Blocking (CONC FLR)

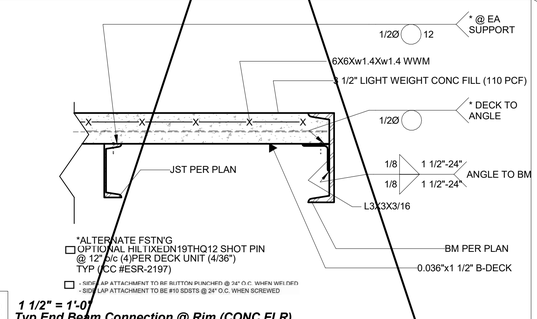

12 *1 1/2" = 1'-0"*
Typ End Beam Connection @ Rim (CONC FLR)

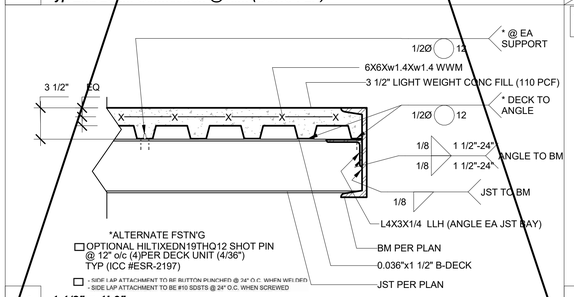

11 *1 1/2" = 1'-0"*
Typ Side Beam Connection @ Rim (CONC FLR)

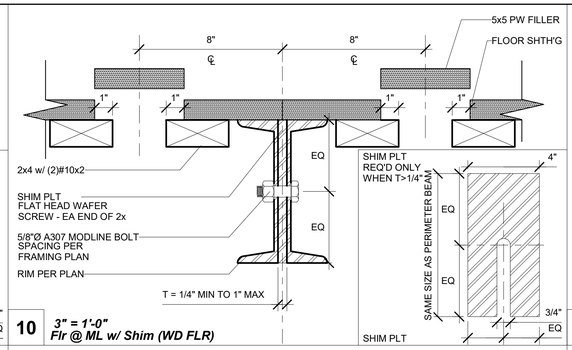

10 *3" = 1'-0"*
Flr @ ML w/ Shim (WD FLR)

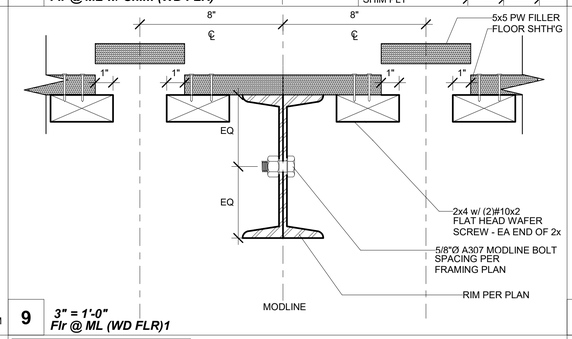

9 *3" = 1'-0"*
Flr @ ML (WD FLR)1

* SIZE OF WELD (S) = THICKNESS OF THINER MATERIAL

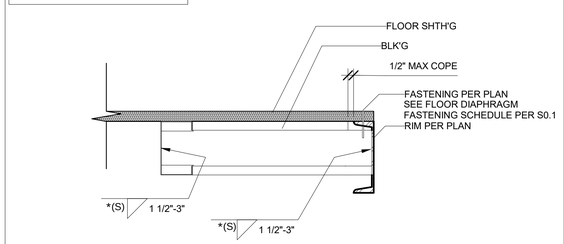

8 *1 1/2" = 1'-0"*
Typ Blk'g Connection @ Rim (WD FLR)

* SIZE OF WELD (S) = THICKNESS OF THINER MATERIAL

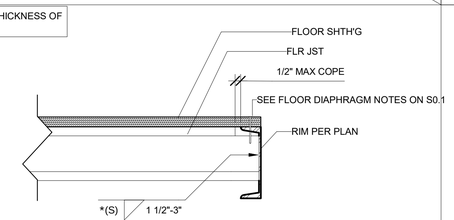

6 *1 1/2" = 1'-0"*
Typ Joist Connection @ Rim (WD FLR)

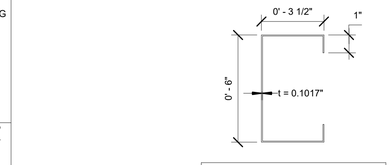

CHANNEL JOIST SECTION PROPERTIES
A-1011, GRADE 33

t	= 0.1017"
S_x	= 2.822 IN^3
I_x	= 8.631 IN^4
F_y	= 33 KSI

5 *3" = 1'-0"*
Channel Joist Section Properties (600S350-97)

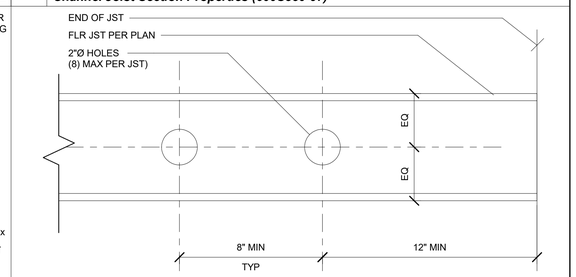

4 *3" = 1'-0"*
Elevation - Allowable Jst Holes

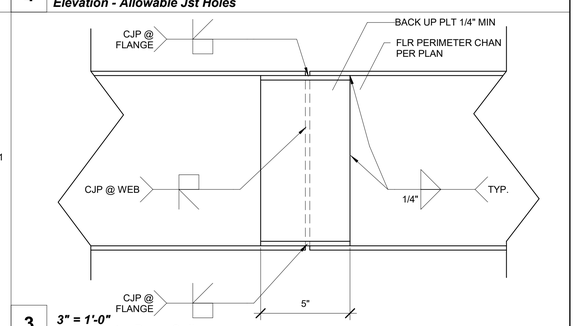

3 *3" = 1'-0"*
Flr Perimeter Beam Splice

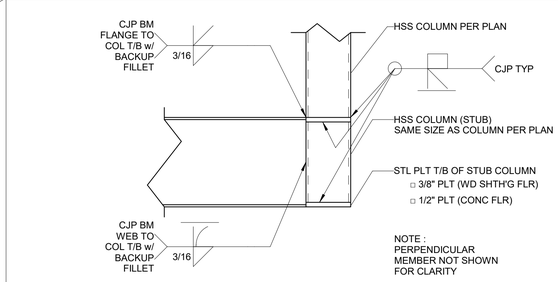

2 *1 1/2" = 1'-0"*
Typ Flr Bm to Column Connection

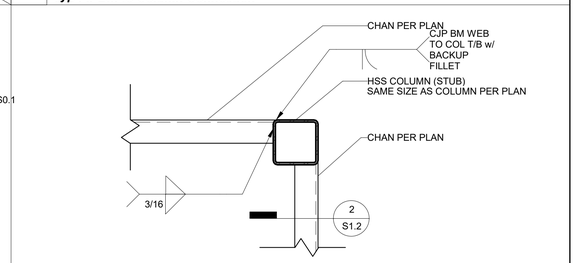

1 *1 1/2" = 1'-0"*
Typ Corner Connection

PROJECT SPECIFIC STATE AGENCY APPROVAL

IDENTIFICATION STAMP
DIV. OF THE STATE ARCHITECT
APP: 02-123433 INC: A
REVIEWED FOR
SS ☑ FLS ☑ ACS ☑
DATE: 01/20/2026

R&S TAVARES ASSOCIATES
DESIGN ♦ CONSULTING ♦ PROJECT MGT
11590 W BERNARDO COURT, SUITE 100
SAN DIEGO, CA 92127
WWW.RSTAVARES.COM

PROFESSIONAL STAMP

REGISTERED PROFESSIONAL ENGINEER
MANNY D. FRANCISCO
No. 63380
Exp. 03/31/24
STRUCTURAL
STATE OF CALIFORNIA
RST#22088
02/16/24

THE PLANS, IDEAS & DESIGNS SHOWN ON THESE DRAWINGS ARE THE PROPERTY OF R&S TAVARES ASSOCIATES, INC. DEVISED SOLELY FOR THIS CONTRACT. THESE PLANS SHALL NOT BE USED, IN WHOLE OR IN PART, FOR ANY PURPOSE FOR WHICH THEY WERE NOT INTENDED WITHOUT THE EXPRESS WRITTEN CONSENT OF R&S TAVARES ASSOCIATES, INC. ©

CLIENT

Class Leasing
1651Juanita Street, San Jacinto, CA 92583
Voice (951) 943-1908 Fax (951)943-5768

ORIGINAL PC STATE AGENCY APPROVAL

APPROVED
DIV. OF THE STATE ARCHITECT
APP: 04-123059 PC
REVIEWED FOR
SS ☑ FLS ☑ ACS ☑ CG ☑
DATE: 02/20/2024

Revision Schedule

#	Description	Date

PRE-CHECK (PC) DOCUMENT

Code: 2022 CBC

A separate project application for construction is required

PROJECT TITLE
PC 2022 CBC:24' x 40' EXPANDABLE TO 120' x 40'

SHEET TITLE
STRUCTURAL DETAILS (FLOOR)

PROJECT NUMBER
22088

DRAWN BY
rMc/SC

CHECKED BY
JA/RT

DATE

SHEET NO.
S1.2

SHEET OF

C:\Users\User\Documents\RST#20132 - Class Leasing, PC 24x40 to 120x40 HS_detached_CES&R24D63.rvt

6/8/2021 1:52:34 AM

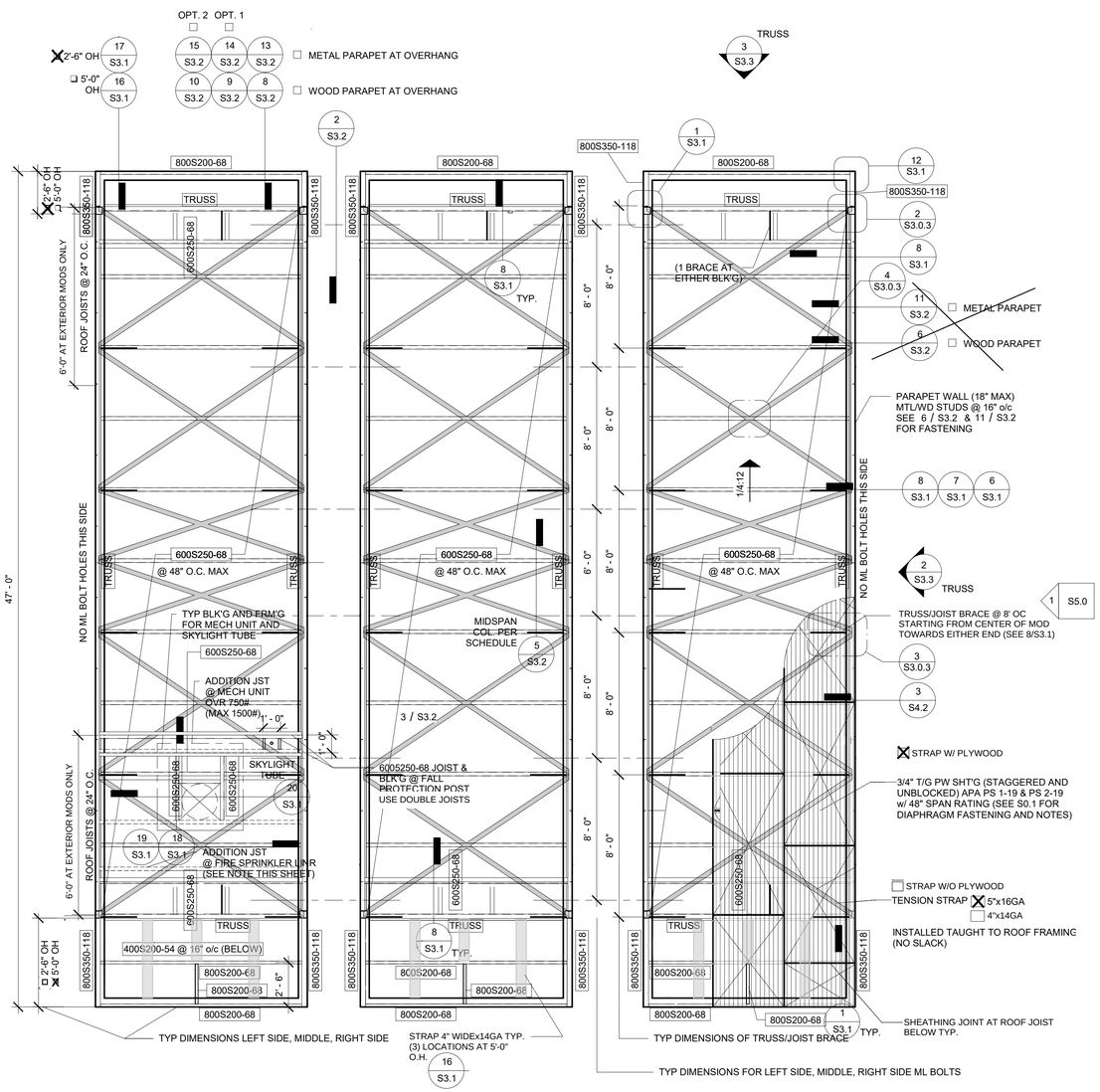

1 *1/4" = 1'-0"*
Mono Roof Framing Plan

NOTES:

FIRE SPRINKLER
ADDITIONAL ROOF JOIST FOR FIRE SPRINKLER LINE AS REQ'D
LOCATION OF FIRE SPRINKLER AND ADDITIONAL JOIST TO BE DETERMINED

PV REQUIREMENTS:

1.7 REQUIRED PHOTOVOLTAIC (PV) SYSTEMS

WHEN A PV SYSTEM IS REQUIRED BY THE CALIFORNIA ENERGY CODE FOR A PC BUILDING CONFIGURATION, THE PV SYSTEM DESIGN SHALL BE IN ACCORDANCE WITH IR 16-8: SOLAR PHOTOVOLTAIC AND THERMAL SYSTEMS REVIEW AND APPROVAL REQUIREMENTS. THE PC DESIGN SHALL SHOW THAT THE STRUCTURE CAN SUPPORT THE REQUIRED SYSTEM LOADS WHEN THE BUILDING IS SUPPORTING THE PV SYSTEM. IF THE PV SYSTEM IS REQUIRED IT WILL BE SUBMITTED WITH THE SITE SPECIFIC APPLICATION

8.3 REQUIRED PHOTOVOLTAIC (PV) SYSTEMS ENERGY REVIEW

WHEN A PV SYSTEM IS REQUIRED PER THE CALIFORNIA ENERGY CODE FOR A PC CONFIGURATION, THE SYSTEM POWER REQUIREMENTS SHALLL BE CLEARLY DELINEATED ON THE PC PLANS IN THE DESIGN INFORMATION SECTION FOR THE PC. SEE SECTION 1.7 ABOVE FOR DESIGN AND SUBMITTAL REQUIREMENTS OF THE PV SYSTEM.

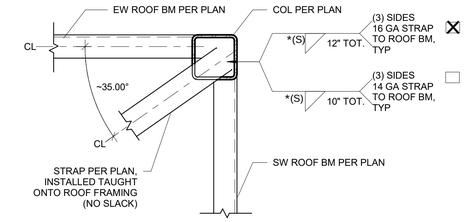

2 *1 1/2" = 1'-0"*
ROOF BRACING STRAP @ ENDWALL

* SIZE OF WELD (S) = THICKNESS OF THINER MATERIAL

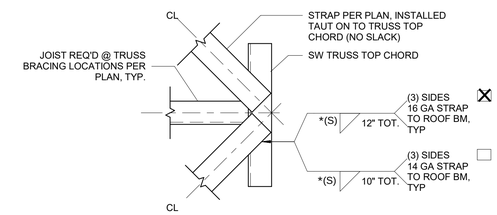

3 *1 1/2" = 1'-0"*
ROOF STRAP BRACING @ SIDEWALL

* SIZE OF WELD (S) = THICKNESS OF THINER MATERIAL

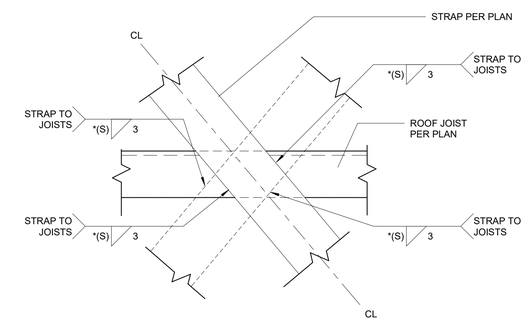

4 *3" = 1'-0"*
STRAP TO JOIST CONNECTION (ROOF)

* SIZE OF WELD (S) = THICKNESS OF THINER MATERIAL

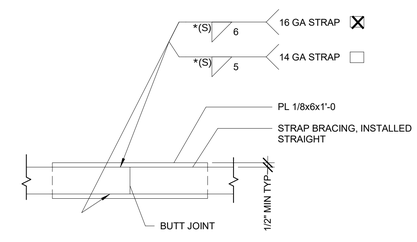

5 *1 1/2" = 1'-0"*
STRAP SPLICE DETAIL (ROOF)

* SIZE OF WELD (S) = THICKNESS OF THINER MATERIAL

PROJECT SPECIFIC STATE AGENCY APPROVAL

IDENTIFICATION STAMP
DIV. OF THE STATE ARCHITECT
APP: 02-123433 INC:
REVIEWED FOR
SS ☑ FLS ☑ ACS ☑
DATE: 01/20/2026

R&S TAVARES ASSOCIATES
DESIGN ♦ CONSULTING ♦ PROJECT MGT
11590 W BERNARDO COURT, SUITE 100
SAN DIEGO, CA 92127
WWW.RSTAVARES.COM

PROFESSIONAL STAMP

REGISTERED PROFESSIONAL ENGINEER
MANNY D. FRANCISCO
No. 53380
03/31/24
CIVIL STRUCTURAL
STATE OF CALIFORNIA
RST#22088
02/16/24

THE PLANS, IDEAS & DESIGNS SHOWN ON THESE DRAWINGS ARE THE PROPERTY OF R&S TAVARES ASSOCIATES, INC. DEVISED SOLELY FOR THIS CONTRACT. THESE PLANS SHALL NOT BE USED, IN WHOLE OR IN PART, FOR ANY PURPOSE FOR WHICH THEY WERE NOT INTENDED WITHOUT THE EXPRESS WRITTEN CONSENT OF R&S TAVARES ASSOCIATES, INC. ©

CLIENT

Class Leasing
1651Juanita Street, San Jacinto, CA 92583
Voice (951) 943-1908 Fax (951)943-5768

ORIGINAL PC STATE AGENCY APPROVAL

APPROVED
DIV. OF THE STATE ARCHITECT
APP: 04-123059 PC
REVIEWED FOR
SS ☑ FLS ☑ ACS ☑ CG ☑
DATE: 02/20/2024

Revision Schedule

#	Description	Date

PRE-CHECK (PC) ALTERNATE DOCUMENT

CODE: 2019 CBC

A separate project application for construction is required

PROJECT TITLE
PC 2022 CBC:24' x 40' EXPANDABLE TO 120' x 40'

SHEET TITLE
MONO SLOPE ROOF FRM'G PLAN CROSS-STRAP OPT.

PROJECT NUMBER
22088

DRAWN BY
MJM

CHECKED BY
RH/rMc

DATE
06/07/2021

SHEET NO.
S3.0.3

SHEET OF

10/25/2022 3:45:46 PM M:\2022\22088 - Class Leasing, 24x40 to 120x40 High Seismic 2022 PC\REVIT\source file detached 22095 for S3.0.3 and S3.0.4\source file detached 22095 for S3.0.3 and S3.0.4.rvt

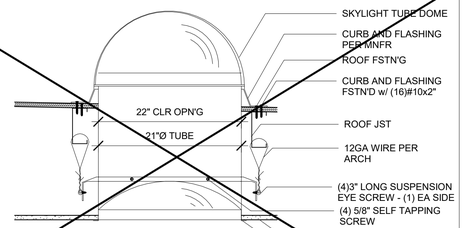

20 *1" = 1'-0"*
SKYLIGHT TUBE

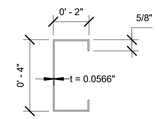

OVERHANG CHANNEL SECTION PROPERTIES
400S200-54
A-1003, GRADE 33, TYPE H
t = 0.0566"
S_x = 0.623 IN^3
I_x = 1.292 IN^4
F_y = 33 KSI

15 *3" = 1'-0"*
Soffit Channel Section Properties

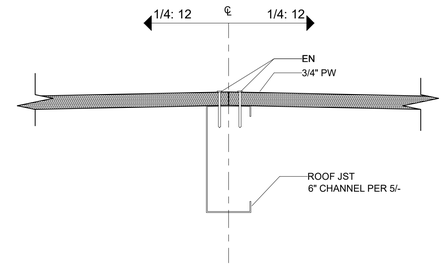

10 *3" = 1'-0"*
Roof @ Ridge

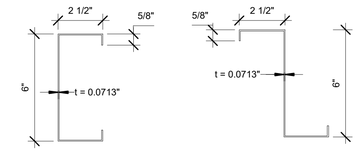

CHANNEL JOIST SECTION PROPERTIES
600S250-68 OR Z6X2.5X5/8-14GA
A-1003, GRADE 33, TYPE H
t = 0.0713"
S_x = 1.508 IN^3
I_x = 4.727 IN^4
F_y = 33 KSI

5 *3" = 1'-0"*
Roof Channel Joist Section Properites

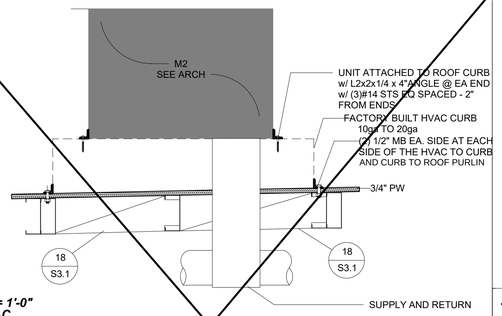

19 *1" = 1'-0"*
HVAC

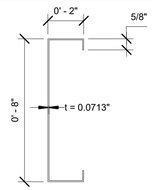

OVERHANG CHANNEL SECTION PROPERTIES
800S200-68
A-1003, GRADE 33, TYPE H
t = 0.0713"
S_x = 2.035 IN^3
I_x = 8.140 IN^4
F_y = 33 KSI

14 *3" = 1'-0"*
Fascia Channel Section Properties

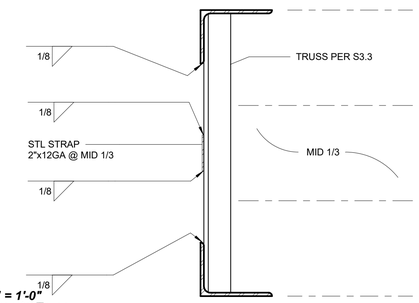

9 *3" = 1'-0"*
Strap to Truss

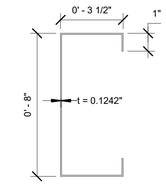

OVERHANG CHANNEL SECTION PROPERTIES
800S350-118
A-1003, GRADE 33, TYPE H
t = 0.1242"
S_x = 5.010 IN^3
I_x = 20.041 IN^4
F_y = 33 KSI

4 *3" = 1'-0"*
Overhang Beam Section Properites

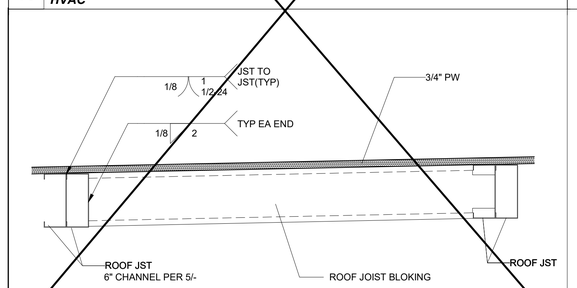

18 *1 1/2" = 1'-0"*
HVAC Frmg

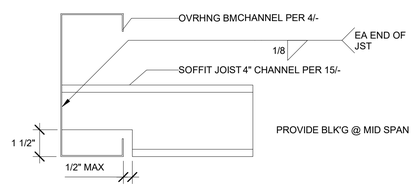

13 *3" = 1'-0"*
Typ Soffit Joist Connection

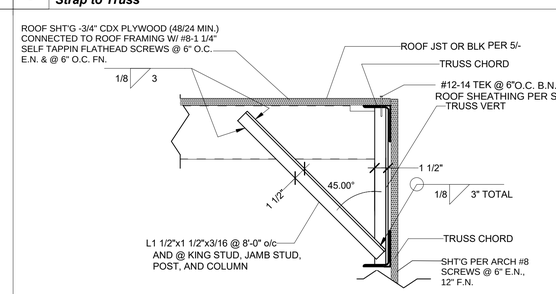

8 *1 1/2" = 1'-0"*
Typ Roof Jst Bracing

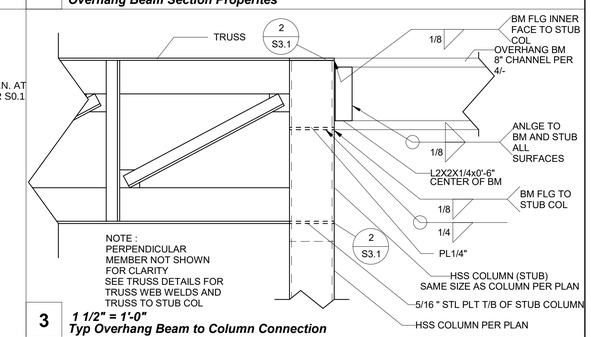

3 *1 1/2" = 1'-0"*
Typ Overhang Beam to Column Connection

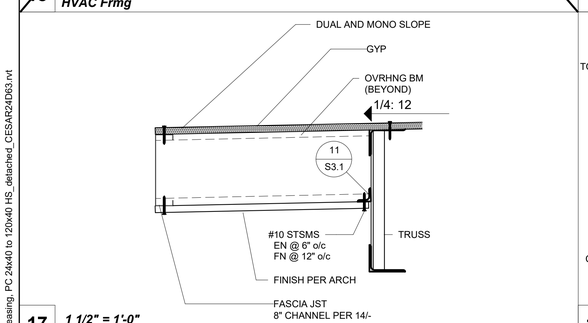

17 *1 1/2" = 1'-0"*
2'-6" Overhang @ Endwall

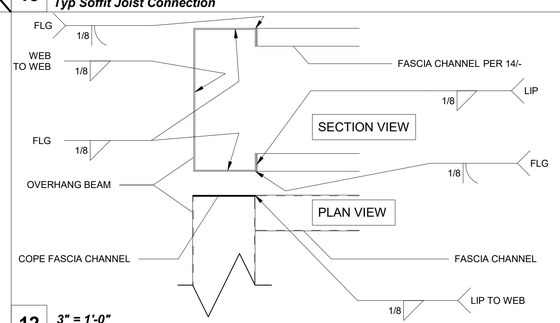

12 *3" = 1'-0"*
Fascia to Overhang Beam

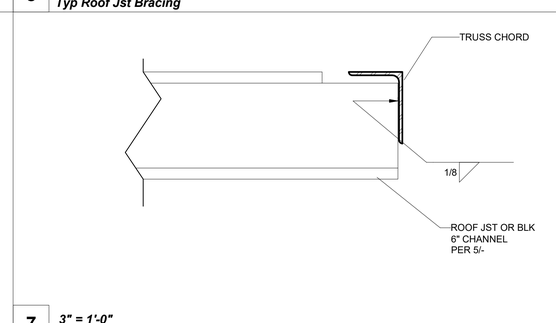

7 *3" = 1'-0"*
Typ Roof Joist Connection @ Truss Chord

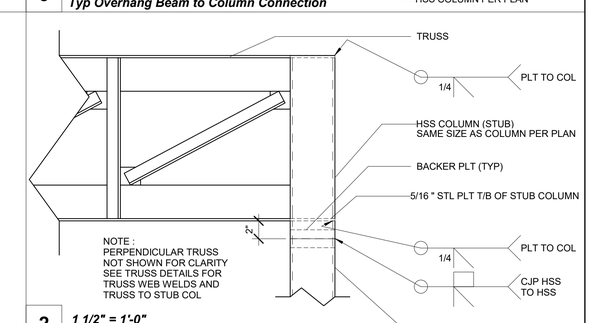

2 *1 1/2" = 1'-0"*
Typ Stub Column Connection

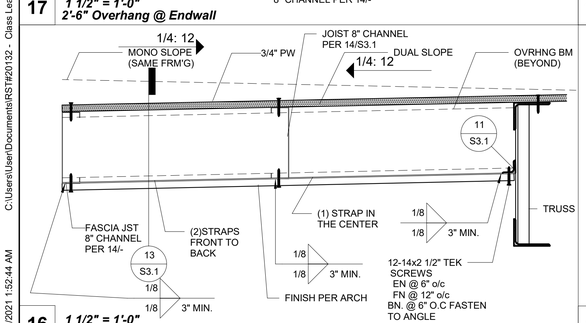

16 *1 1/2" = 1'-0"*
5'-0" Overhang @ Endwall

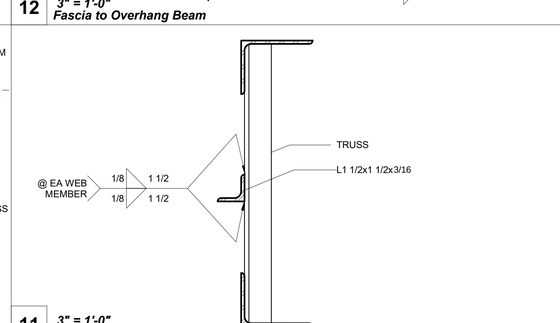

11 *3" = 1'-0"*
Angle to Truss

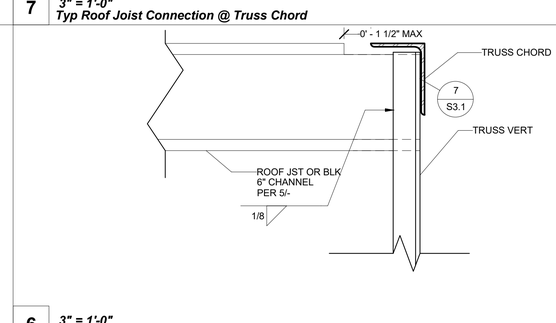

6 *3" = 1'-0"*
Typ Roof Joist Connection @ Truss Vert

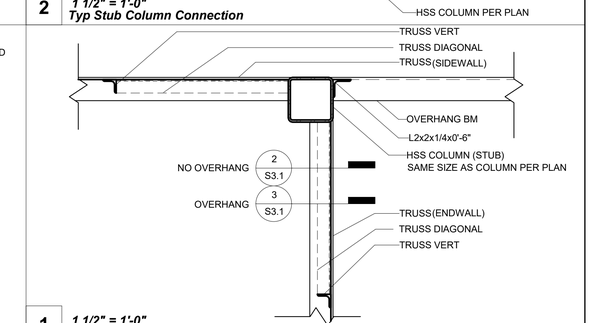

1 *1 1/2" = 1'-0"*
Typ Corner Connection @ Roof

PROJECT SPECIFIC STATE AGENCY APPROVAL

IDENTIFICATION STAMP
DIV. OF THE STATE ARCHITECT
APP: 02-123433 INC:
REVIEWED FOR
SS ☑ FLS ☑ ACS ☑
DATE: 01/20/2026

R&S TAVARES ASSOCIATES
DESIGN ♦ CONSULTING ♦ PROJECT MGT
11590 W BERNARDO COURT, SUITE 100
SAN DIEGO, CA 92127
WWW.RSTAVARES.COM

PROFESSIONAL STAMP

REGISTERED PROFESSIONAL ENGINEER
MANNY D. FRANCISCO
No. 63380
Exp. 03/31/24
STRUCTURAL
STATE OF CALIFORNIA
RST#22088
02/16/24

THE PLANS, IDEAS & DESIGNS SHOWN ON THESE DRAWINGS ARE THE PROPERTY OF R&S TAVARES ASSOCIATES, INC. DEVISED SOLELY FOR THIS CONTRACT. THESE PLANS SHALL NOT BE USED, IN WHOLE OR IN PART, FOR ANY PURPOSE FOR WHICH THEY WERE NOT INTENDED WITHOUT THE EXPRESS WRITTEN CONSENT OF R&S TAVARES ASSOCIATES, INC. ©

CLIENT

Class Leasing
1651Juanita Street, San Jacinto, CA 92583
Voice (951) 943-1908 Fax (951)943-5768

ORIGINAL PC STATE AGENCY APPROVAL

APPROVED
DIV. OF THE STATE ARCHITECT
APP: 04-123059 PC
REVIEWED FOR
SS ☑ FLS ☑ ACS ☑ CG ☑
DATE: 02/20/2024

Revision Schedule

#	Description	Date

PRE-CHECK (PC) DOCUMENT

Code: 2022 CBC

A separate project application for construction is required

PROJECT TITLE
PC 2022 CBC:24' x 40' EXPANDABLE TO 120' x 40'

SHEET TITLE
STRUCTURAL DETAILS (ROOF)

PROJECT NUMBER
22088

DRAWN BY
rMc/SC

CHECKED BY
JA/RT

DATE

SHEET NO.
S3.1

SHEET OF

C:\Users\User\Documents\RST#20132 - Class Leasing, PC 24x40 to 120x40 HS_detached_CESAR24D63.rvt
6/8/2021 1:52:44 AM

TABLE A-SECTION CENTROID	
SECTION	CENTROID C
L4X3 (LLV)	1 1/4"
L4X3 (LLH)	3/4"
L2X2X3/16	9/16"
L1.5X1.5X3/16	7/16"

NOTE: SEE DETAIL 8 / S3.3

12 *1/2" = 1'-0"*
TABLE A - SECTION CENTROID

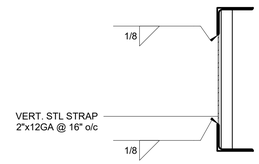

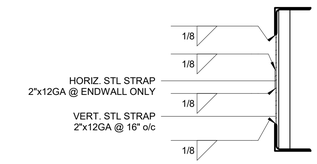

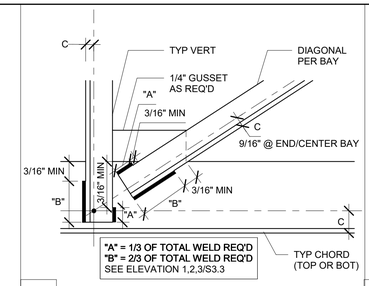

8 *3" = 1'-0"*
Typ Fillet Weld Lengths

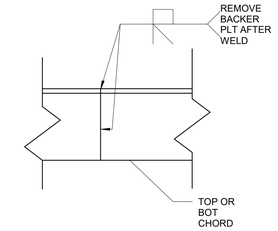

9 *3" = 1'-0"*
Typ Truss Chord Splice

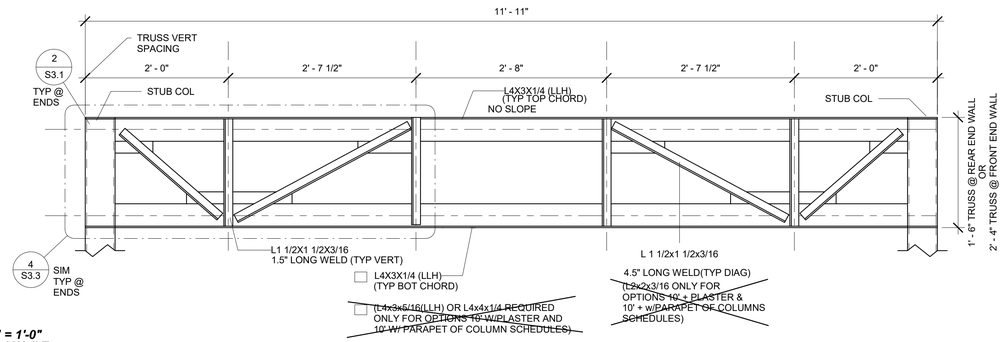

3 *1" = 1'-0"*
End Wall Truss

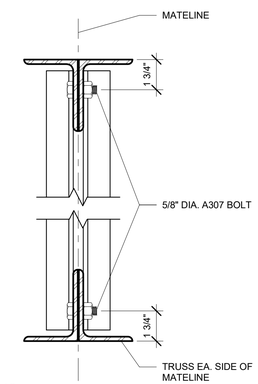

10 *3" = 1'-0"*
TRUSS CONN. @ MATELINE

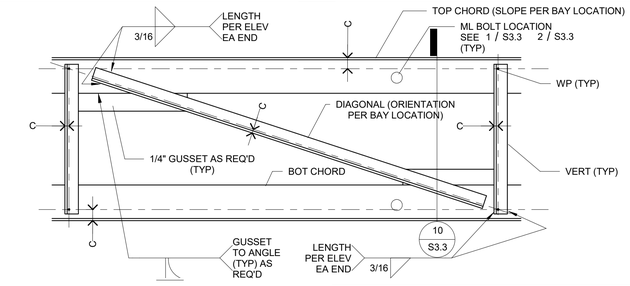

NOTE:
SEE 8 / S3.3 FOR ALL FILLET WELD LENGTH DISTRIBUTION

7 *1 1/2" = 1'-0"*
Typ Truss Bay

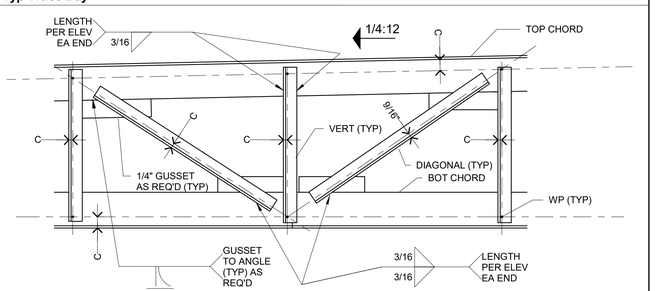

NOTE:
SEE 8 / S3.3 FOR ALL FILLET WELD LENGTH DISTRIBUTION

6 *1 1/2" = 1'-0"*
Typ Truss @ Center Bay (Mono Slope)

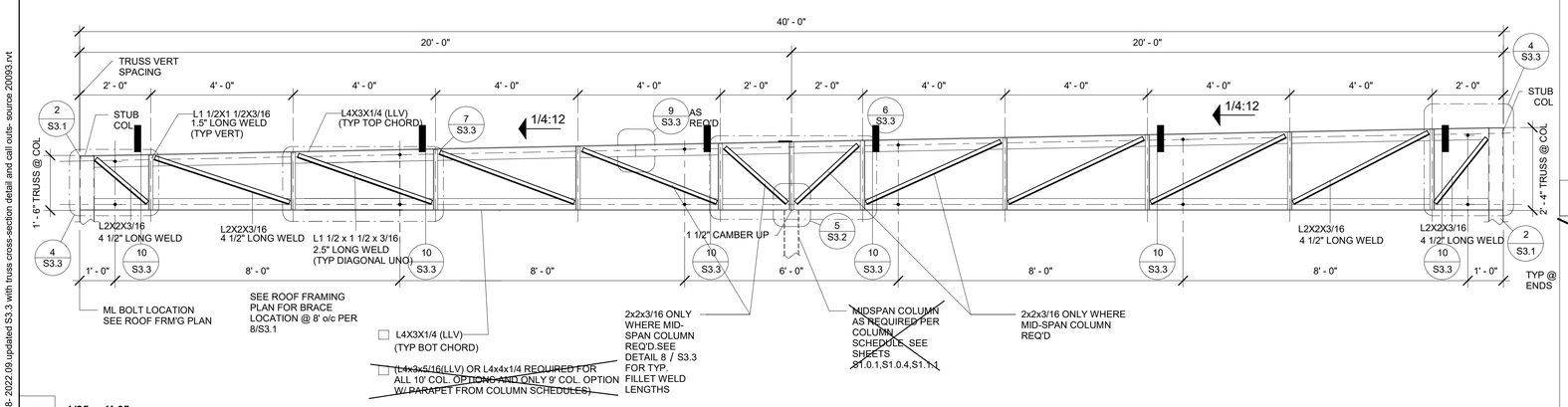

2 *1/2" = 1'-0"*
Mono Truss

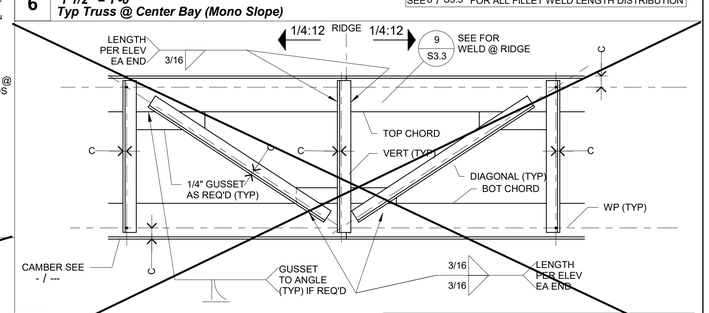

NOTE:
SEE 8 / S3.3 FOR ALL FILLET WELD LENGTH DISTRIBUTION

5 *1 1/2" = 1'-0"*
Typ Truss @ Center Bay (Dual Slope)

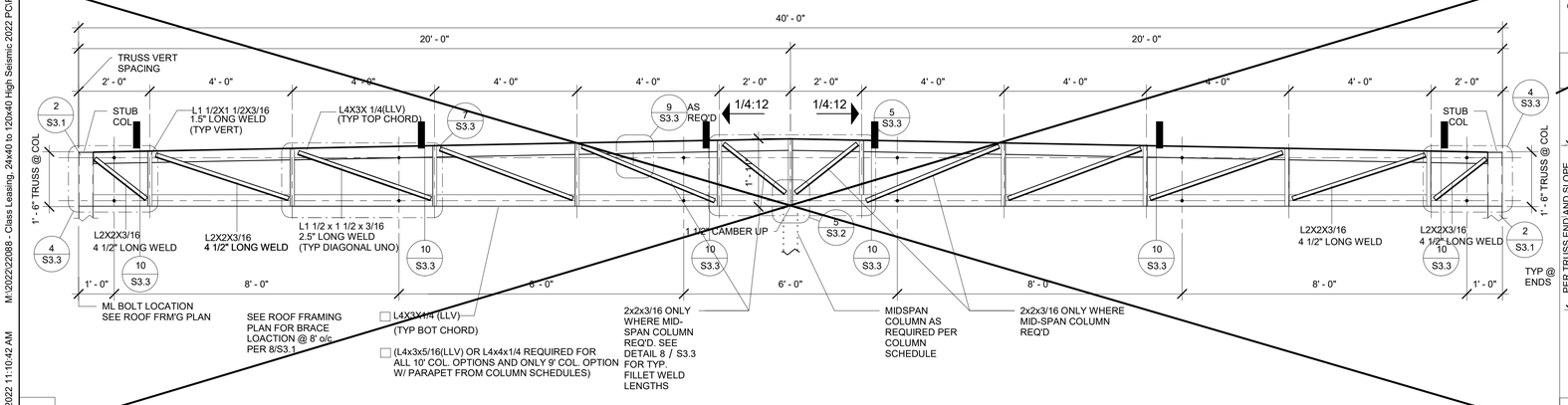

1 *1/2" = 1'-0"*
Dual Truss

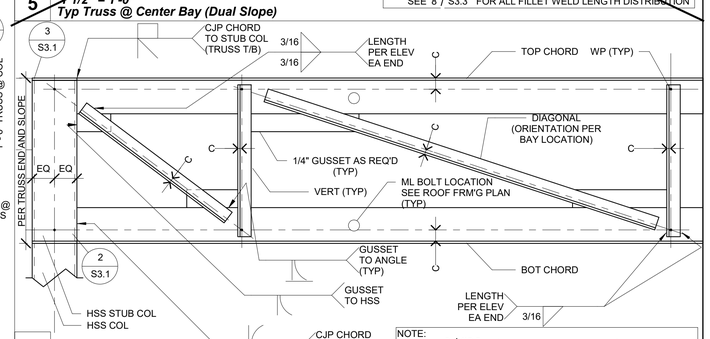

NOTE:
SEE 8 / S3.3 FOR ALL FILLET WELD LENGTH DISTRIBUTION

4 *1 1/2" = 1'-0"*
Typ End Bay to Stub Conn

PROJECT SPECIFIC STATE AGENCY APPROVAL

IDENTIFICATION STAMP
DIV. OF THE STATE ARCHITECT
APP: 02-123433 INC:
REVIEWED FOR
SS ☑ FLS ☑ ACS ☑
DATE: 01/20/2026

R&S TAVARES ASSOCIATES
DESIGN ♦ CONSULTING ♦ PROJECT MGT
11590 W BERNARDO COURT, SUITE 100
SAN DIEGO, CA 92127
WWW.RSTAVARES.COM

PROFESSIONAL STAMP

REGISTERED PROFESSIONAL ENGINEER
MANNY D. FRANCISCO
C 63380
03/31/24
CIVIL STRUCTURAL
STATE OF CALIFORNIA
RST#22088
02/16/24

THE PLANS, IDEAS & DESIGNS SHOWN ON THESE DRAWINGS ARE THE PROPERTY OF R&S TAVARES ASSOCIATES, INC. DEVISED SOLELY FOR THIS CONTRACT. THESE PLANS SHALL NOT BE USED, IN WHOLE OR IN PART, FOR ANY PURPOSE FOR WHICH THEY WERE NOT INTENDED WITHOUT THE EXPRESS WRITTEN CONSENT OF R&S TAVARES ASSOCIATES, INC. ©

CLIENT

Class Leasing
1651Juanita Street, San Jacinto, CA 92583
Voice (951) 943-1908 Fax (951)943-5768

ORIGINAL PC STATE AGENCY APPROVAL

APPROVED
DIV. OF THE STATE ARCHITECT
APP: 04-123059 PC
REVIEWED FOR
SS ☑ FLS ☑ ACS ☑ CG ☑
DATE: 02/20/2024

Revision Schedule

#	Description	Date

PRE-CHECK (PC) DOCUMENT

CODE: 2022 CBC

A separate project application for construction is required

PROJECT TITLE
PC 2022 CBC: 24' x 40' EXPANDABLE TO 120' x 40'

SHEET TITLE
ROOF PERIMETER TRUSS

PROJECT NUMBER
22088

DRAWN BY
rMc/SC

CHECKED BY
RH/RT

DATE

SHEET NO.
S3.3

SHEET OF

9/22/2022 11:10:42 AM M:\2022\22088 - Class Leasing, 24x40 to 120x40 High Seismic 2022 PC\REVIT\22088- 2022.09.updated S3.3 with truss cross-section detail and call outs- source 20093.rvt

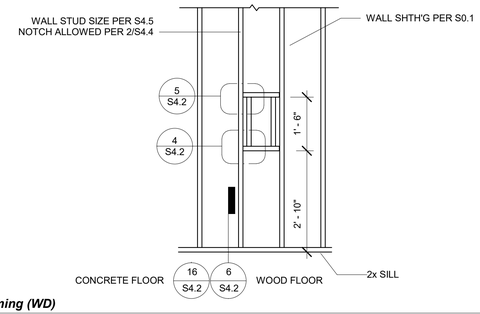

6 *1/2" = 1'-0"*
Typ Fire Extinguisher Framing (WD)

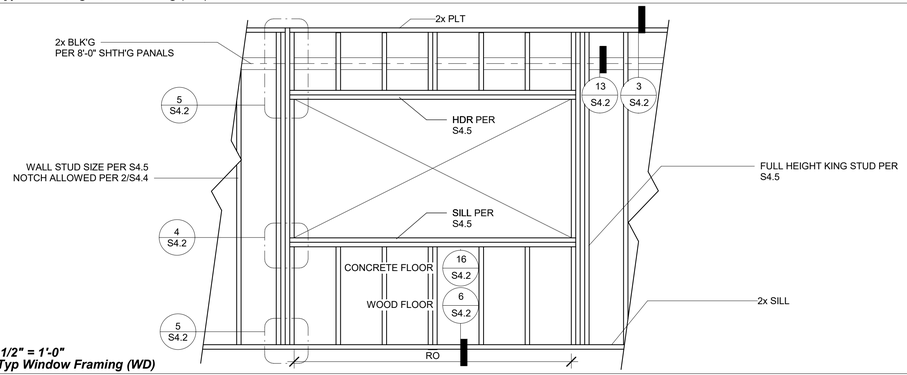

4 *1/2" = 1'-0"*
Typ Window Framing (WD)

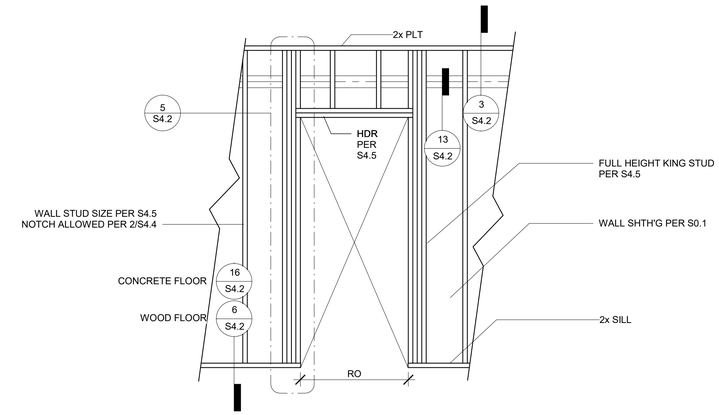

5 *1/2" = 1'-0"*
Typ Door Framing (WD)

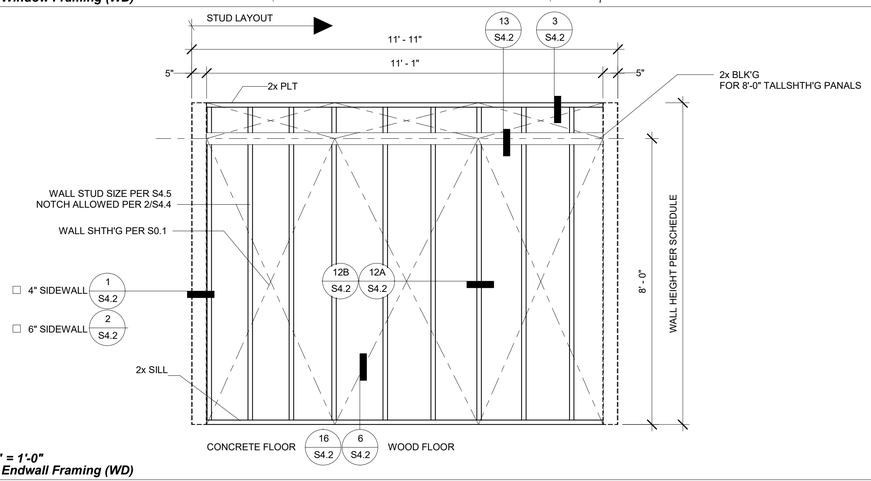

2 *1/2" = 1'-0"*
Typ Endwall Framing (WD)

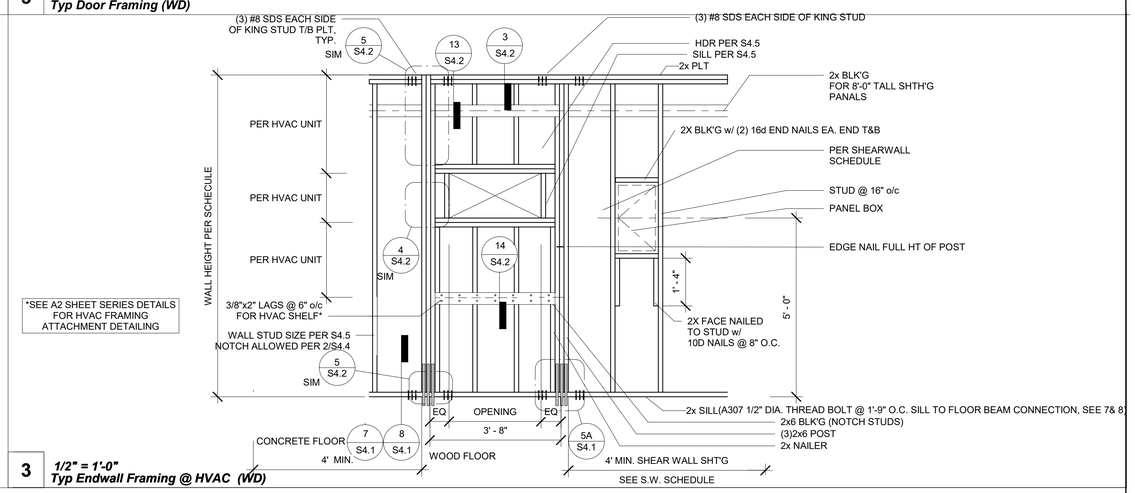

3 *1/2" = 1'-0"*
Typ Endwall Framing @ HVAC (WD)

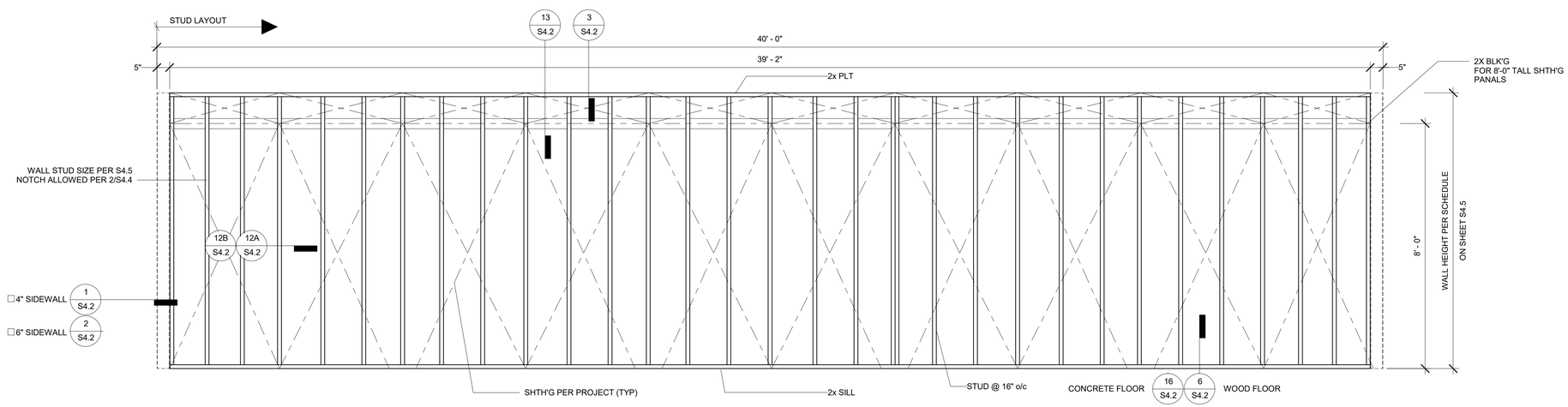

1 *1/2" = 1'-0"*
Typ Sidewall Framing (WD)

PROJECT SPECIFIC STATE AGENCY APPROVAL

IDENTIFICATION STAMP
DIV. OF THE STATE ARCHITECT
APP: 02-123433 INC:
REVIEWED FOR
SS ☑ FLS ☑ ACS ☑
DATE: 01/20/2026

R&S TAVARES ASSOCIATES
DESIGN ◆ CONSULTING ◆ PROJECT MGT
11590 W BERNARDO COURT, SUITE 100
SAN DIEGO, CA 92127
WWW.RSTAVARES.COM

PROFESSIONAL STAMP

REGISTERED PROFESSIONAL ENGINEER
JAMANT D. FRANCHETTI
No. 53380
Exp. 03/31/24
STRUCTURAL
STATE OF CALIFORNIA
RST#22088
02/16/24

THE PLANS, IDEAS & DESIGNS SHOWN ON THESE DRAWINGS ARE THE PROPERTY OF R&S TAVARES ASSOCIATES, INC. DEVISED SOLELY FOR THIS CONTRACT. THESE PLANS SHALL NOT BE USED, IN WHOLE OR IN PART, FOR ANY PURPOSE FOR WHICH THEY WERE NOT INTENDED WITHOUT THE EXPRESS WRITTEN CONSENT OF R&S TAVARES ASSOCIATES, INC. ©

CLIENT

Class Leasing
1651Juanita Street, San Jacinto, CA 92583
Voice (951) 943-1908 Fax (951)943-5768

ORIGINAL PC STATE AGENCY APPROVAL

APPROVED
DIV. OF THE STATE ARCHITECT
APP: 04-123059 PC
REVIEWED FOR
SS ☑ FLS ☑ ACS ☑ CG ☑
DATE: 02/20/2024

Revision Schedule

#	Description	Date

PRE-CHECK (PC) DOCUMENT

Code: 2022 CBC

A separate project application for construction is required

PROJECT TITLE
PC 2022 CBC:24' x 40' EXPANDABLE TO 120' x 40'

SHEET TITLE
WD WALL FRAMING ELEVATIONS

PROJECT NUMBER
22088

DRAWN BY
rMc/SC

CHECKED BY
JA/RT

DATE

SHEET NO.
S4.1

SHEET OF

C:\Users\User\Documents\RST#20132 - Class Leasing, PC 24x40 to 120x40 HS_detached_CESAR24D63.rvt

6/8/2021 1:52:57 AM

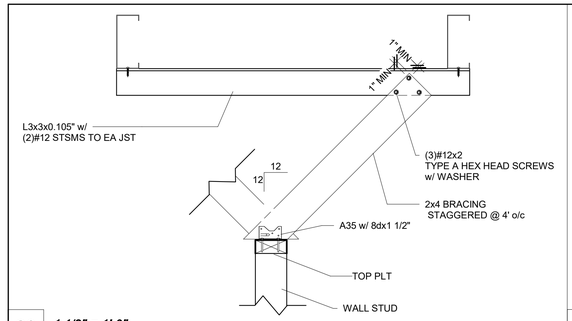

20 *1 1/2" = 1'-0"*
Sections - Interior Partition w/ Brace to Blk'g (WD)

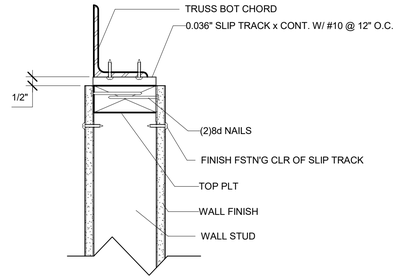

15 *3" = 1'-0"*
Section - Interior Wall Top Plate @ Truss (ML)

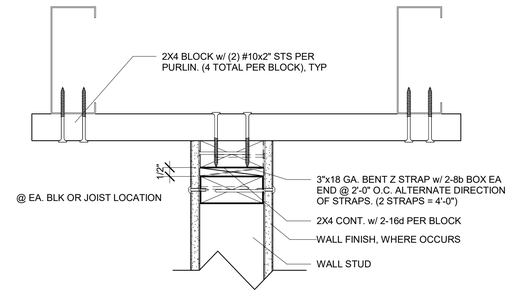

10 *3" = 1'-0"*
Sections - Interior Partition @ Blk'g (WD)

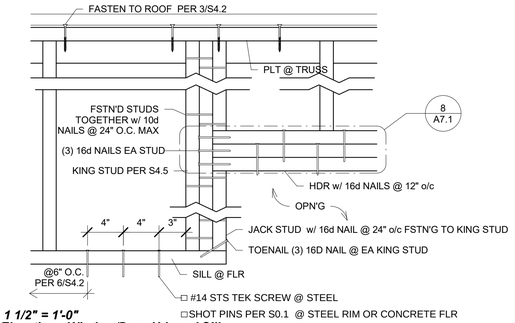

5 *1 1/2" = 1'-0"*
Elevation - Window/Door Hdr and Sill

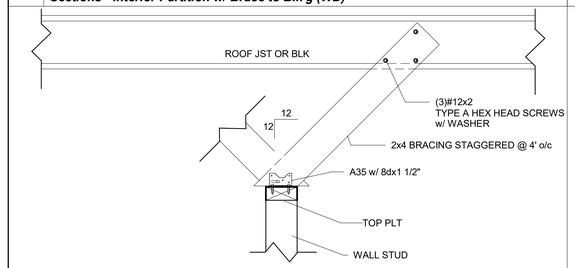

19 *1 1/2" = 1'-0"*
Sections - Interior Partition w/ Brace (WD)

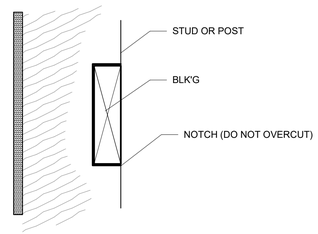

14 *3" = 1'-0"*
Notch Stud @ Blk'g

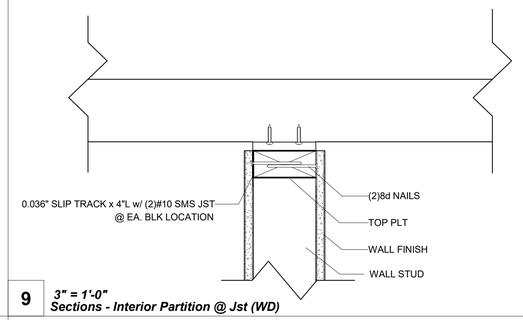

9 *3" = 1'-0"*
Sections - Interior Partition @ Jst (WD)

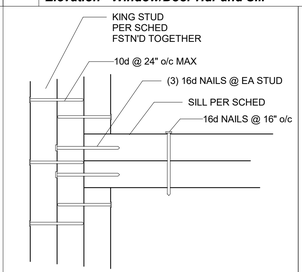

4 *3" = 1'-0"*
Elevation - Ext Wall Sill @ Window

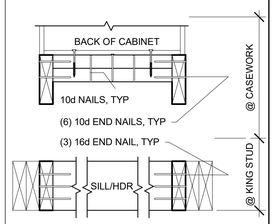

12 *1 1/2" = 1'-0"*
CASEWORK END NAIL PLAN

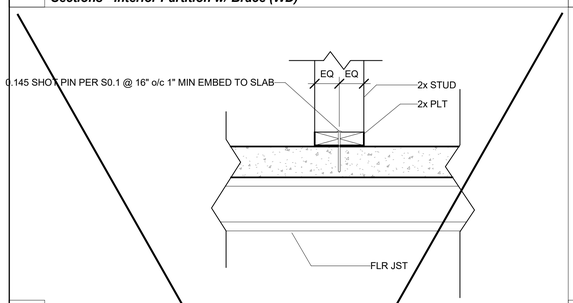

18 *1 1/2" = 1'-0"*
Typ Partition Sill Connection (CONC)

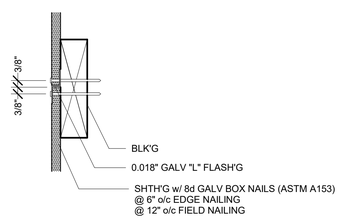

13 *3" = 1'-0"*
Shth'g @ Blk'g

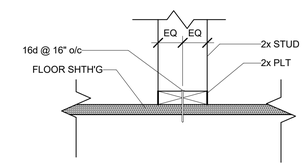

8 *1 1/2" = 1'-0"*
Typ Partition Sill Connection (WD)

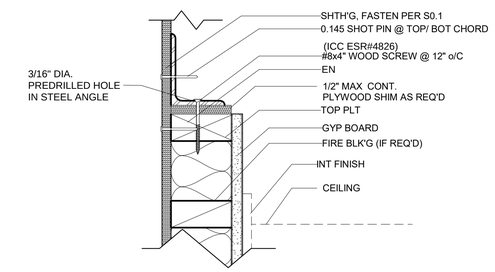

3 *3" = 1'-0"*
Section - Exterior Wall Top Plate @ Truss (WD)

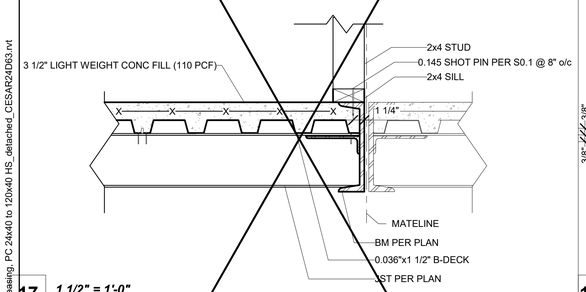

17 *1 1/2" = 1'-0"*
Wall Sill Plt Connection @ Interior Sidewall (CONC)

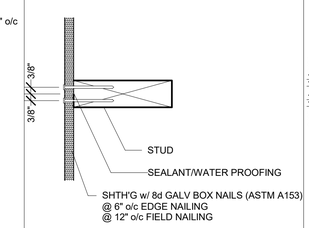

12A *3" = 1'-0"*
Shth'g @ Butt Jnt

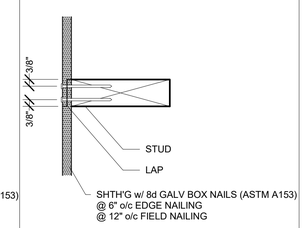

12B *3" = 1'-0"*
Shth'g @ Lap Jnt

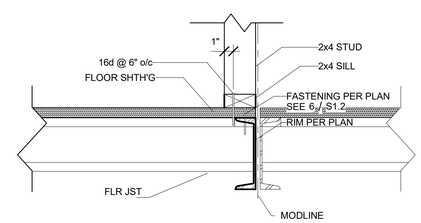

7 *1 1/2" = 1'-0"*
2x4 Wall Sill Connection @ Interior Sidewalls (WD)

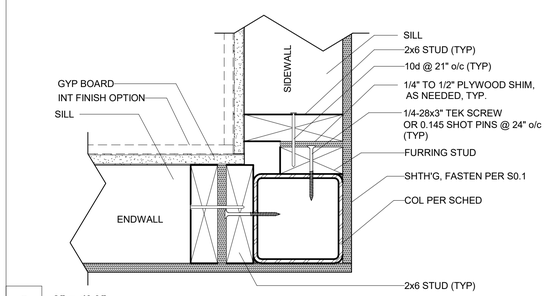

2 *3" = 1'-0"*
2x6 Framing @ Column (WD)

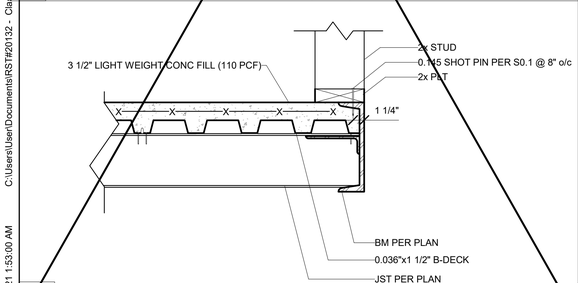

16 *1 1/2" = 1'-0"*
Wall Sill Plt Connection @ Exterior Rim (CONC)

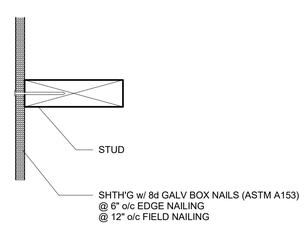

11 *3" = 1'-0"*
Shth'g @ Stud Conn

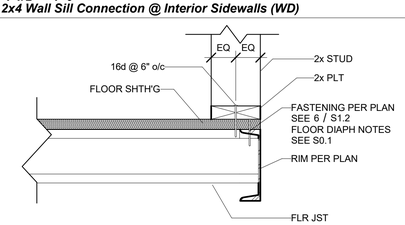

6 *1 1/2" = 1'-0"*
Wall Sill Connection @ Exterior Rim (WD)

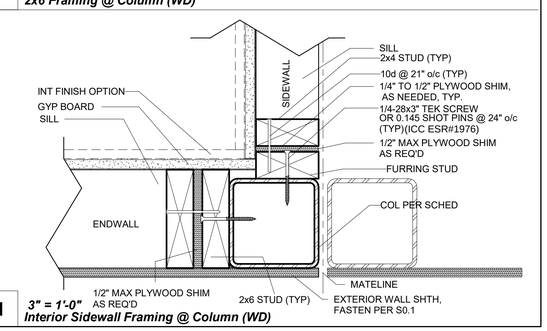

1 *3" = 1'-0"*
Interior Sidewall Framing @ Column (WD)

PROJECT SPECIFIC STATE AGENCY APPROVAL

IDENTIFICATION STAMP
DIV. OF THE STATE ARCHITECT
APP: 02-123433 INC:
REVIEWED FOR
SS ☑ FLS ☑ ACS ☑
DATE: 01/20/2026

R&S TAVARES ASSOCIATES
DESIGN ◆ CONSULTING ◆ PROJECT MGT
11590 W BERNARDO COURT, SUITE 100
SAN DIEGO, CA 92127
WWW.RSTAVARES.COM

PROFESSIONAL STAMP

REGISTERED PROFESSIONAL ENGINEER
MANNY D. FRANCISCO
No. 63380
Exp. 03/31/24
STRUCTURAL
STATE OF CALIFORNIA
RST#22088
02/16/24

THE PLANS, IDEAS & DESIGNS SHOWN ON THESE DRAWINGS ARE THE PROPERTY OF R&S TAVARES ASSOCIATES, INC. DEVISED SOLELY FOR THIS CONTRACT. THESE PLANS SHALL NOT BE USED, IN WHOLE OR IN PART, FOR ANY PURPOSE FOR WHICH THEY WERE NOT INTENDED WITHOUT THE EXPRESS WRITTEN CONSENT OF R&S TAVARES ASSOCIATES, INC. ©

CLIENT

Class Leasing
1651Juanita Street, San Jacinto, CA 92583
Voice (951) 943-1908 Fax (951)943-5768

ORIGINAL PC STATE AGENCY APPROVAL

APPROVED
DIV. OF THE STATE ARCHITECT
APP: 04-123059 PC
REVIEWED FOR
SS ☑ FLS ☑ ACS ☑ CG ☑
DATE: 02/20/2024

Revision Schedule

#	Description	Date

PRE-CHECK (PC) DOCUMENT

Code: 2022 CBC

A separate project application for construction is required

PROJECT TITLE
PC 2022 CBC:24' x 40' EXPANDABLE TO 120' x 40'

SHEET TITLE
WALL DETAILS (WOOD FRAMING)

PROJECT NUMBER
22088

DRAWN BY
rMc/SC

CHECKED BY
JA/RT

DATE

SHEET NO.
S4.2

SHEET OF

C:\Users\User\Documents\RST\#20132 - Class Leasing, PC 24x40 to 120x40 HS_detached_CESAR24D63.rvt

6/8/2021 1:53:00 AM

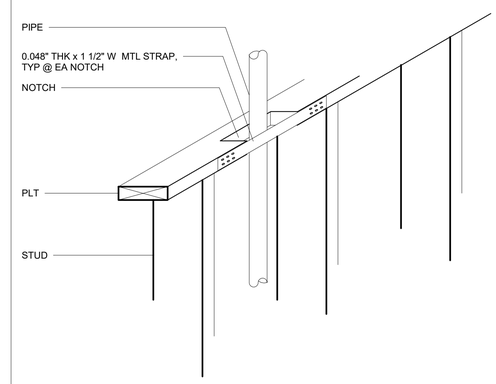

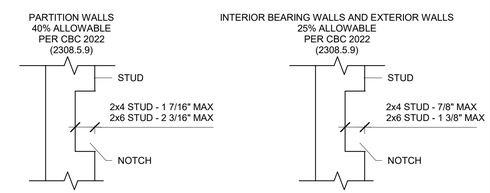

2 ***1 1/2" = 1'-0"***
Plt Notch

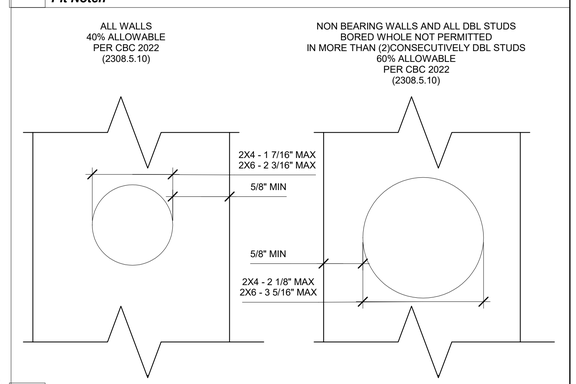

1 ***6" = 1'-0"***
Stud Penetration

PROJECT SPECIFIC STATE AGENCY APPROVAL

IDENTIFICATION STAMP
DIV. OF THE STATE ARCHITECT
APP: 02-123433 INC:
REVIEWED FOR
SS ☑ FLS ☑ ACS ☑
DATE: 01/20/2026

R&S TAVARES ASSOCIATES
DESIGN ◆ CONSULTING ◆ PROJECT MGT
11590 W Bernardo Court, Suite 100
San Diego, CA 92127
www.rstavares.com

PROFESSIONAL STAMP

REGISTERED PROFESSIONAL ENGINEER
MANNY D. FRANCISCO
No. C 53380
Exp. 03/31/24
STRUCTURAL
STATE OF CALIFORNIA
RST#22088
02/16/24

THE PLANS, IDEAS & DESIGNS SHOWN ON THESE DRAWINGS ARE THE PROPERTY OF R&S TAVARES ASSOCIATES, INC. DEVISED SOLELY FOR THIS CONTRACT. THESE PLANS SHALL NOT BE USED, IN WHOLE OR IN PART, FOR ANY PURPOSE FOR WHICH THEY WERE NOT INTENDED WITHOUT THE EXPRESS WRITTEN CONSENT OF R&S TAVARES ASSOCIATES, INC. ©

CLIENT

Class Leasing
1651Juanita Street, San Jacinto, CA 92583
Voice (951) 943-1908 Fax (951)943-5768

ORIGINAL PC STATE AGENCY APPROVAL

APPROVED
DIV. OF THE STATE ARCHITECT
APP: 04-123059 PC
REVIEWED FOR
SS ☑ FLS ☑ ACS ☑ CG ☑
DATE: 02/20/2024

Revision Schedule

#	Description	Date

PRE-CHECK (PC) DOCUMENT

Code: 2022 CBC

A separate project application for construction is required

PROJECT TITLE
PC 2022 CBC:24' x 40' EXPANDABLE TO 120' x 40'

SHEET TITLE
TYP FRAMING

PROJECT NUMBER
22088

DRAWN BY
rMc/SC

CHECKED BY
JA/RT

DATE

SHEET NO.
S4.4

SHEET OF

6/8/2021 1:53:06 AM C:\Users\User\Documents\RST#20132 - Class Leasing, PC 24x40 to 120x40 HS_detached_CES&R24D63.rvt

2x4 Interior Wall Opening Schedule

COL HEIGHT	OPN'G SIZE	HDR			SILL			FULL HEIGHT KING STUD		
		Lumber	Number	Type	Lumber	Number	Type	Lumber	Number	Type
9FT	3070	HF / SYP	1	#2	-	-	-	HF	2	#2
		DF / SYP	1	#2	-	-	-	DF	2	#2
	4070	HF / SYP	1	#2	-	-	-	HF	2	#2
		DF / SYP	1	#2	-	-	-	DF	2	#2
	6040	HF / SYP	2	#2	DF	2	#2	HF	2	#2
		DF / SYP	2	#2	DF	2	#2	DF	2	#2
	8040	HF / SYP	3	#2	HF	3	#2	HF	2	#2
		DF / SYP	3	#2	DF	3	#2	DF	2	#2
10FT	3070	HF / SYP	1	#2	-	-	-	HF	2	#2
		DF / SYP	1	#2	-	-	-	DF	2	#2
	4070	HF / SYP	1	#2	-	-	-	HF	2	#2
		DF / SYP	1	#2	-	-	-	DF	2	#2
	6040	HF / SYP	2	#2	HF	2	#2	HF	2	#2
		DF / SYP	2	#2	DF	2	#2	DF	2	#2
	8040	HF / SYP	3	#2	HF	3	#2	HF	2	#2
		DF / SYP	3	#2	DF	3	#2	DF	2	#2

2x6 Exterior Wall Opening Schedule (SHTH'G FINISH)

COL HEIGHT	OPN'G SIZE	HDR			SILL			FULL HEIGHT KING STUD		
		Lumber	Number	Type	Lumber	Number	Type	Lumber	Number	Type
9FT	3070	HF / SYP	1	#2	HF	1	#2	HF	1	#2
		DF / SYP	1	#2	DF	1	#2	DF	1	#2
	4070	HF / SYP	1	#2	HF	1	#2	HF	1	#2
		DF / SYP	1	#2	DF	1	#2	DF	1	#2
	6040	HF / SYP	1	#2	HF	1	#2	HF	1	#2
		DF / SYP	1	#2	DF	1	#2	DF	1	#2
	8040	HF / SYP	1	#2	HF	1	#2	HF	2	#2
		DF / SYP	1	#2	DF	1	#2	DF	2	#2
10FT	3070	HF / SYP	1	#2	HF	1	#2	HF	1	#2
		DF / SYP	1	#2	DF	1	#2	DF	1	#2
	4070	HF / SYP	1	#2	HF	1	#2	HF	1	#2
		DF / SYP	1	#2	DF	1	#2	DF	1	#2
	6040	HF / SYP	1	#2	HF	1	#2	HF	2	#2
		DF / SYP	1	#2	DF	1	#2	DF	2	#2
	8040	HF / SYP	1	#2	HF	1	#2	HF	2	#2
			1	#2	DF	1	#2	DF	2	#2

2x6 Exterior Wall Opening Schedule (PLASTER FINISH)

COL HEIGHT	OPN'G SIZE	HDR			SILL			FULL HEIGHT KING STUD		
		Lumber	Number	Type	Lumber	Number	Type	Lumber	Number	Type
9FT	3070	HF	1	#2	HF	1	#2	HF	1	#2
		DF	1	#2	DF	1	#2	DF	1	#2
	4070	HF	1	#2	HF	1	#2	HF	1	#2
		DF	1	#2	DF	1	#2	DF	1	#2
	6040	HF	1	#2	HF	1	#2	HF	2	#2
		DF	1	#2	DF	1	#2	DF	1	#2
	8040	HF	2	#2	HF	1	#2	HF	2	#2
		DF	1	#2	DF	1	#2	DF	2	#2
10FT	3070	HF	1	#2	HF	1	#2	HF	2	#2
		DF	1	#2	DF	1	#2	DF	1	#2
	4070	HF	1	#2	HF	1	#2	HF	2	#2
		DF	1	#2	DF	1	#2	DF	1	#2
	6040	HF	1	#2	HF	1	#2	HF	2	#2
		DF	1	#2	DF	1	#2	DF	2	#2
	8040	HF	2	#2	HF	1	#2	HF	3	#2
		DF	1	#2	DF	1	#2	DF	2	#2

2x4 Interior Wall Framing Schedule

COL HEIGHT	Typical Location				4ft From Building Corner			
	Lumber	Number	Type	Spacing	Lumber	Number	Type	Spacing
9	HF	1	#2	16" O.C.	-	-	-	-
	DF	1	#2	16" O.C.	-	-	-	-
10	HF	1	#2	16" O.C.	-	-	-	-
	DF	1	#2	16" O.C.	-	-	-	-

2x6 Exterior Wall Framing Schedule (SHTH'G FINISH)

COL HEIGHT	Typical Location				4ft From Building Corner			
	Lumber	Number	Type	Spacing	Lumber	Number	Type	Spacing
9	HF	1	#2	16" O.C.	HF	1	#2	16" O.C.
	DF	1	#2	16" O.C.	DF	1	#2	16" O.C.
10	HF	1	#2	16" O.C.	HF	1	#2	16" O.C.
	DF	1	#2	16" O.C.	DF	1	#2	16" O.C.

2x6 Exterior Wall Framing Schedule (PLASTER FINISH)

COL HEIGHT	Typical Location				4ft From Building Corner			
	Lumber	Number	Type	Spacing	Lumber	Number	Type	Spacing
9	HF	1	#2	16" O.C.	HF	1	#2	16" O.C.
	DF	1	#2	16" O.C.	DF	1	#2	16" O.C.
10	HF	1	#2	16" O.C.	HF	1	#2	16" O.C.
	DF	1	#2	16" O.C.	DF	1	#2	16" O.C.

NOTE: SEE DETAIL 1 ON SHEETS A2.1 - A2.6

PROJECT SPECIFIC STATE AGENCY APPROVAL

IDENTIFICATION STAMP
DIV. OF THE STATE ARCHITECT
APP: 02-123433 INC:
REVIEWED FOR
SS ☑ FLS ☑ ACS ☑
DATE: 01/20/2026

R&S TAVARES ASSOCIATES
DESIGN ♦ CONSULTING ♦ PROJECT MGT
11590 W Bernardo Court, Suite 100
San Diego, CA 92127
www.rstavares.com

PROFESSIONAL STAMP

REGISTERED PROFESSIONAL ENGINEER
JANNY D. FRANCISCO-TAVARES
No. 63380
Exp. 03/31/24
CIVIL STRUCTURAL
STATE OF CALIFORNIA

RST#22088

02/16/24

THE PLANS, IDEAS & DESIGNS SHOWN ON THESE DRAWINGS ARE THE PROPERTY OF R&S TAVARES ASSOCIATES, INC. DEVISED SOLELY FOR THIS CONTRACT. THESE PLANS SHALL NOT BE USED, IN WHOLE OR IN PART, FOR ANY PURPOSE FOR WHICH THEY WERE NOT INTENDED WITHOUT THE EXPRESS WRITTEN CONSENT OF R&S TAVARES ASSOCIATES, INC. ©

CLIENT

Class Leasing
1651Juanita Street, San Jacinto, CA 92583
Voice (951) 943-1908 Fax (951)943-5768

ORIGINAL PC STATE AGENCY APPROVAL

APPROVED
DIV. OF THE STATE ARCHITECT
APP: 04-123059 PC
REVIEWED FOR
SS ☑ FLS ☑ ACS ☑ CG ☑
DATE: 02/20/2024

Revision Schedule

#	Description	Date

PRE-CHECK (PC) DOCUMENT

Code: 2022 CBC

A separate project application for construction is required

PROJECT TITLE

PC 2022 CBC:24' x 40' EXPANDABLE TO 120' x 40'

SHEET TITLE

FRAMING SCHEDULES

PROJECT NUMBER 22088

DRAWN BY rMc/SC

CHECKED BY JA/RT

DATE

SHEET NO. S4.5

SHEET OF

6/8/2021 1:53:06 AM C:\Users\User\Documents\RST#20132 - Class Leasing, PC 24x40 to 120x40 HS_detached_CES&R24D63.rvt

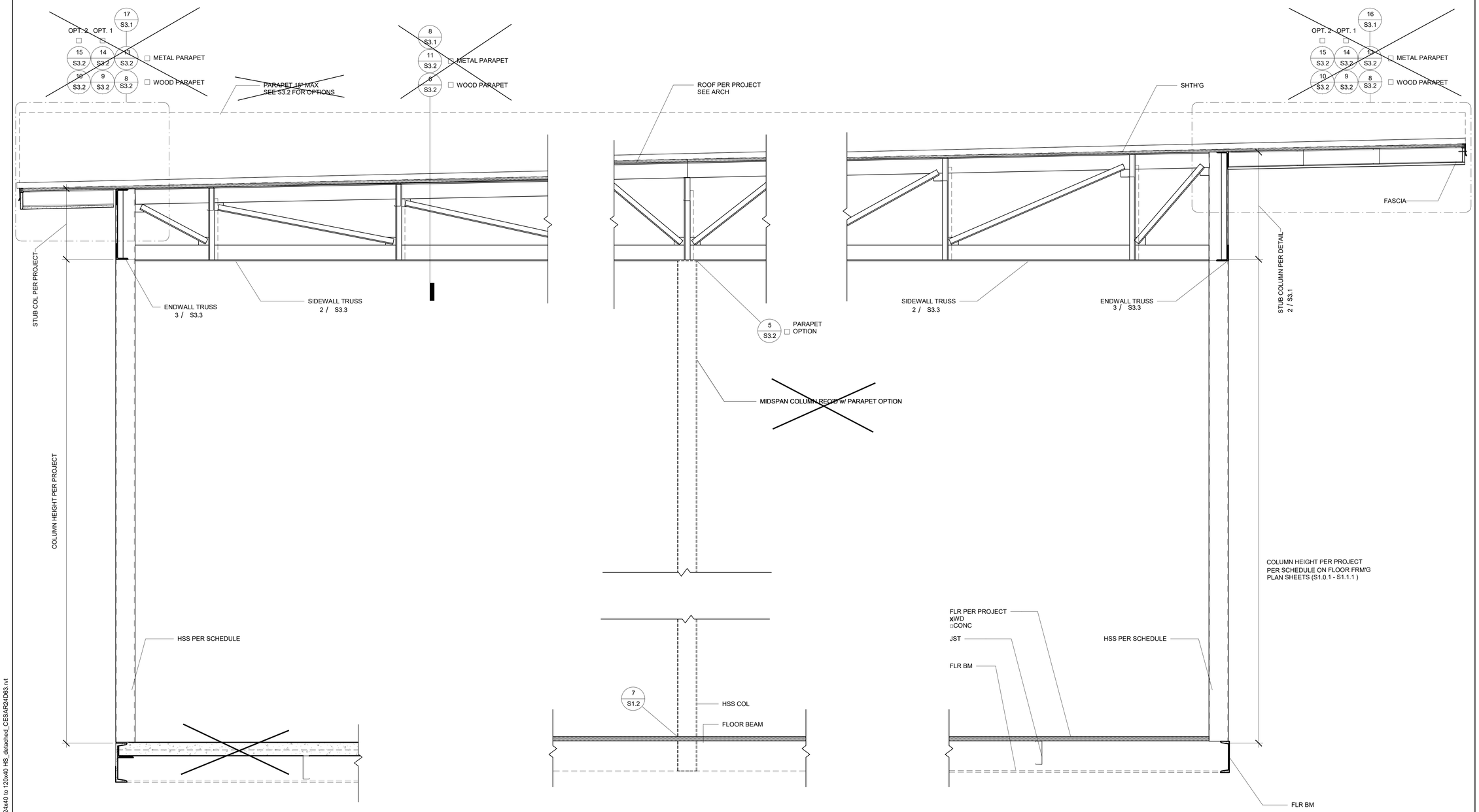

1 *1" = 1'-0"*
Structural Section (MONO)

PROJECT SPECIFIC STATE AGENCY APPROVAL

IDENTIFICATION STAMP
DIV. OF THE STATE ARCHITECT
APP: 02-123433 INC:
REVIEWED FOR
SS ☑ FLS ☑ ACS ☑
DATE: 01/20/2026

R&S TAVARES ASSOCIATES
DESIGN ♦ CONSULTING ♦ PROJECT MGT
11590 W BERNARDO COURT, SUITE 100
SAN DIEGO, CA 92127
WWW.RSTAVARES.COM

PROFESSIONAL STAMP

REGISTERED PROFESSIONAL ENGINEER
JAMANT D. FRANCIS
No. 63380
Exp. 03/31/24
CIVIL STRUCTURAL
STATE OF CALIFORNIA
RST#22088
02/16/24

THE PLANS, IDEAS & DESIGNS SHOWN ON THESE DRAWINGS ARE THE PROPERTY OF R&S TAVARES ASSOCIATES, INC. DEVISED SOLELY FOR THIS CONTRACT. THESE PLANS SHALL NOT BE USED, IN WHOLE OR IN PART, FOR ANY PURPOSE FOR WHICH THEY WERE NOT INTENDED WITHOUT THE EXPRESS WRITTEN CONSENT OF R&S TAVARES ASSOCIATES, INC. ©

CLIENT

Class Leasing
1651Juanita Street, San Jacinto, CA 92583
Voice (951) 943-1908 Fax (951)943-5768

ORIGINAL PC STATE AGENCY APPROVAL

APPROVED
DIV. OF THE STATE ARCHITECT
APP: 04-123059 PC
REVIEWED FOR
SS ☑ FLS ☑ ACS ☑ CG ☑
DATE: 02/20/2024

Revision Schedule

#	Description	Date

PRE-CHECK (PC) DOCUMENT

Code: 2022 CBC

A separate project application for construction is required

PROJECT TITLE
PC 2022 CBC:24' x 40' EXPANDABLE TO 120' x 40'

SHEET TITLE
LONG. SECTION - (MONO)

PROJECT NUMBER
22088

DRAWN BY
rMc/SC

CHECKED BY
JA/RT

DATE

SHEET NO.
S5.0

SHEET OF

6/8/2021 1:53:08 AM C:\Users\User\Documents\RST#20132 - Class Leasing, PC 24x40 to 120x40 HS_detached_CESAR24D63.rvt

PARTIAL LIST OF APPLICABLE CODES AS OF JANUARY 1, 2020

LIST OF APPLICABLE CODES
2022 CALIFORNIA ADMINISTRATIVE CODE (CAC), PART 1, TITLE 24 CCR
2022 CALIFORNIA BUILDING CODE (CBC), PART 2, TITLE 24 CCR
2022 CALIFORNIA ELECTRICAL CODE (CEC), PART 3, TITLE 24 CCR
2022 CALIFORNIA MECHANICAL CODE (CMC), PART 4, TITLE 24 CCR
2022 CALIFORNIA PLUMBING CODE (CPC), PART 5, TITLE 24 CCR
2022 CALIFORNIA ENERGY CODE, PART 6, TITLE 24 CCR
2022 CALIFORNIA FIRE CODE (CFC), PART 9, TITLE 24 CCR
2022 CALIFORNIA EXISTING BUILDING CODE (CEBC), PART 10, TITLE 24 CCR
2022 CALIFORNIA GREEN BUILDING STANDARD CODE (CALGREEEN), PART 11, TITLE 24 CCR
2022 CALIFORNIA REFERENCED STANDARDS CODE, PART 12, TITLE 24 CCR
TITLE 19 CCR, PUBLIC SAFETY, STATE FIRE MARSHAL REGULATIONS

APPLICABLE STANDARDS
FOR A LIST OF APPLICABLE STANDARDS, INCLUDING CALIFORNIA AMENDMENTS TO THE NFPA STANDARDS, REFER TO CBC CHAPTER 35 AND CFC CHAPTER 80.

NOTE: CAL/OSHA ELEVATOR UNIT ENFORCES CCR TITLE 8 AND USES THE 2004 ASME A17.1 BY ADOPTION

*CALIFORNIA ADMINISTRATIVE CODE, PART1, CHAPTER 10, ADMINISTRATIVE REGULATIONS FOR THE CALIFORNIA ENERGY COMMISSION (CEC)

GENERAL NOTES

CHANGES TO THE APPROVED DRAWINGS AND SPECIFICATION SHALL BE MADE BY AN ADDENDUM OR CONSTRUCTION CHANGE DOCUMENT(CCD) BY DSA AS REQUIRED BY SECTION 4-338 PART1, TITLE 24, CCR

A PROJECT INSPECTOR EMPLOYED BY THE DISTRICT(OWNER) AND APPROVED BY DSA SHALL PROVIDE CONTINUOUS INSPECTION OF THE WORK. DUTIES OF INSPECTOR ARE DEFINED IN SECTION 4-342, PART 1 TITLE 24, CCR

COMPLETE ACCESS IS A DIVISION OF INTEGRATED STAIR SYSTEMS INC. WITH CORPORATE OFFICES LOCATED IN 1345 RYAN RD, BUCKLEY, WA 98321, (360) 829-4220

DESIGN LOADS

LIVE LOAD:	100 PSF (4.8 kPa)
HANDRAIL IMPACT:	200 LBS (0.9kN)
HANDRAIL DIST. LOAD:	50 PLF (0.7 kN/m)
RISK CATAGORY:	III
SEISMIC:	Ss=2.80g, S1=1.99g, R=1.25, SITE CLASS D
LATERAL RESISTING SYST:	OTHER STRUCTURES SIMILAR TO BUILDINGS
WIND:	110 MPH, 3 SEC GUST EXPOSURE "C", Kzt=1.0
SEIS IMPORTANCE FACTOR:	Ie=1.25, Iw=1.0 Cs=1.493
DESIGN BASE SHEAR, V:	1493 W
SNOW LOAD:	0 PSF (0 kPa)
SOIL ALLOWABLE BEARING:	1,000 PSF (4.8 kPa

MATERIALS

SQUARE STEEL TUBE	ASTM A513 GR. C	Fy= 33 KSI (345 MPa
RAMP OVERHANG POST	ASTM A500 B	Fy= 46 KSI

*ALL STEEL TO BE COATED WITH GALVANIZED RUST INHIBITING COATING

WOOD FOUNDATION SHALL BE OF FOUNDATION GRADE REDWOOD OR PRESERVATIVE PRESSURE TREATED HEM-FIR #2 AND IS ALLOWED TO REST DIRECTLY ON SOIL OR PAVEMENT.

WELDS

WELDING SHALL BE IN ACCORDANCE WITH AWS D.1.1-10 USING E70XX ELECTRODES FOR STEEL
AND AWS D1.2 AND A5.10 FOR ALUMINUM, USING ALMIGWELD ER4043

BOLTS, SCREWS AND NAILS

STEEL TO STEEL CONNECTIONS: ASTM A307 CARBON STEEL BOLTS SHALL BE GRADE 5 ZINC PLATED. HOT DIPPED GALVANIZED TO ASTM A153 OR ELECTROGALVANIZED TO ASTM B63.3. FASTENER SHALL BE LUBRICATED TO ELIMINATE GALLING. ALL STEEL MEMBERS IN CONTACT WITH ALUMINIUM SHALL BE ZINC COATED TO ELIMINATE GALVANIC REACTION.

STEEL TO STEEL & WOOD CONNECTIONS: ANSI/ASME STEEL LAG SCREWS, STEEL STANDARD WOOD SCREWS, WOOD TO WOOD CONNECTION: ASTM STANDARD COMMOM STEEL NAIL.

ITW RED HEAD CONCRETE WEDGE ANCHORS SHALL BE INSTALLED PER RECOMMENDATION SHOWN IN ESR-2427

HANDRAIL NOTES:

1) MANEUVERING CLEARANCE ON EXTERIOR PULL SIDE OF DOOR SHALL BE 42" TYPICAL (610MM) MINIMUM WITH 60" (1524MM) MINIMUM LANDING IN FRONT OF DOOR.

2) HANDRAILS SHALL BE CONTINUOUS ALONG BOTH SIDES. HANDRAILS SHALL BE PARALLEL WITH THE SURFACE AND PROJECT 12" (301MM) ON BEYOND TOP OF RISER AND 12" (301MM) PLUS 1 TREAD AT BOTTOM RISER. AT RAMPS WHERE HANDRAIL ARE NOT CONTINUOUS BETWEEN RUNS THE HANDRAIL SHALL EXTEND HORIZONTALLY ABOVE THE LANDING 12" (301MM) MINIMUM BEYOND THE BEGINNING AND ENDING OF RAMPS

3) TOP OF HANDRAILS SHALL BE MOUNTED BETWEEN 34" (864MM) AND 38" (965MM) ABOVE THE WALKING SURFACE, ONE CONSISTENT HEIGHT, BEIGINNING TO END.

4) CLEARANCE BETWEEN HANDRAIL AND WALL SHALL BE A MINIMUM OF 1-1/2" (38MM).

5) GUARDS ARE TO BE DESIGNED FOR A CONCENTRATED LOAD OF 200 LBF (0.9 kN) APPLIED @ ANY POINT AND ANY DIRECTION ALONG THE RAIL OR A UNIFORM LOAD OF 50 PLF (0.7 kN/m) APPLIED HORIZONTALLY @ HANDRAIL HEIGHT.

7) HANDRAILS SHALL HAVE A CIRCULAR CROSS SECTION WITH AN OUTSIDE DIAMETER OF 1-1/4" (31.75MM) MINIMUM AND NOT GREATER THAN 2" (51MM) MAXIMUM. **11B-505.7.2** NON-CIRCULAR CROSS SECTIONS: HANDRAIL GRIPPING SURFACES WITH A NON-CIRCULAR CROSS SECTION SHALL HAVE A PERIMETER DIMENSION OF 4 INCHES (102 MM) MINIMUM AND 6¼ INCHES (159 MM) MAXIMUM, AND A CROSS-SECTION DIMENSION OF 2 ¼ INCHES (57 MM) MAXIMUM.

8) GRIPPING SURFACE SHALL BE CONTINUOUS ALONG THIER LENGTH AND SHALL NOT BE OBSTRUCTED ALONG THEIR TOPS OR SIDES.

9) HANDRAILS SHALL NOT ROTATE IN THEIR FITTINGS.

10) ENDS OF HANDRAILS SHALL RETURN SMOOTHLY TO FLOOR, WALL OR POST.

1 *1 1/2" = 1'-0"*
Notes

RAMP NOTES

1) RAMPS SHALL CONFORM TO CBC 2022 TITLE 24 PART 2, CHAPTER 11B, 11B-405

2) RAMP SHALL HAVE A RUNNING SLOPE NOT STEEPER THAN 1:12 (8.33% SLOPE) FOR A MAXIMUM RISE OF 30" (762MM)

3) THE MAXIMUM VERTICAL RISE OF RAMP RUN SHALL BE 30" (762MM) MAXIMUM

4) RAMPS SHALL HAVE LANDING AT BOTTOM AND TOP OF EACH RAMP RUN

5) THE SLOPE ON LANDINGS SHALL NOT BE STEEPER THAN ONE UNIT VERTICAL IN 48 UNITS HORIZONTAL (2% SLOPE) IN ANY DIRECTION

6) LANDING SHALL HAVE A WIDTH AT LEAST AS WIDE AS THE WIDEST RAMP RUN LEADING TO THE LANDING AND A MINIMUM LENGTH OF 60" IN THE DIRECTION OF TRAVEL @ TOP LANDING - 72" MIN @ BOT LANDING

7) CHANGES IN DIRECTION OF TRAVEL SHALL HAVE A LANDING 60" WIDE BY 72" LONG (1524MM x 1829MM) MINIMUM, WITH WITH THE LENGTH BEING IN THE DIRCTION OF DOWNWARD TRAVEL AND CHANGES IN DIRECTION

8) MANEUVERING CLEARANCE ON LANDING ADJACENT TO DOORWAYS SHALL BE NO LESS THAN 42" WITH DOOR IN ANY POSITION AND SHALL NOT BE REDUCED BY MORE THAN 3" WHEN DOOR IS FULLY OPENED

9) WALKING SURFACE SHALL BE ROUGHED OR SHALL BE OF SLIP RESISTANT DIAMOND PLATE ALUMINUM AND ALL LANDINGS TO BE DESIGNED TO NOT RETAIN STANDING WATER - 2.083 MAX SLOPE ANY DIRECTION

ADDITIONAL NOTES

CHANGES TO THE APPROVED DRAWINGS AND SPECIFICATIONS SHALL BE MADE BY AN ADDENDUM OR A CONSTRUCTION CHANGE DOCUMENT (CCD) APPROVED BY THE DIVISION OF THE STATE ARCHITECT, AS REQUIRED BY SECTION 4-338, PART 1, TITLE 24, CCR

SCOPE OF WORK

CONSTRUCTION OF RAMP AND STAIRS BUILDINGS (RELOCATABLE)

DSA 103-22: LISTING OF STRUCTURAL TESTS & SPECIAL INSPECTIONS, 2022 CBC

Application Number:	**School Name:**	**School District:**
DSA File Number:	**Increment Number:**	**Date Created:**

2022 CBC

IMPORTANT: This form is only a summary list of structural tests and some of the special inspections required for the project. Generally, the structural tests and special inspections noted on this form are those that will be performed by the Geotechnical Engineer of Record, Laboratory of Record, or Special Inspector. The actual complete test and inspection program must be performed as detailed on the DSA approved documents. The appendix at the bottom of this form identifies work NOT subject to DSA requirements for special inspection or structural testing. The project inspector is responsible for providing inspection of all facets of construction, including but not limited to, special inspections not listed on this form such as structural wood framing, high-load wood diaphragms, cold-formed steel framing, anchorage of non-structural components, etc., per Title 24, Part 2, Chapter 17A (2022 CBC).

****NOTE:** Undefined section and table references found in this document are from the CBC, or California Building Code.

KEY TO COLUMNS

1. TYPE	2. PERFORMED BY
Continuous – Indicates that a continuous special inspection is required	**GE (Geotechnical Engineer)** – Indicates that the special inspection shall be performed by a registered geotechnical engineer or his or her authorized representative.
Periodic – Indicates that a periodic special inspection is required	**LOR (Laboratory of Record)** – Indicates that the test or special inspection shall be performed by a testing laboratory accepted in the DSA Laboratory Evaluation and Acceptance (LEA) Program. See CAC Section 4-335.
Test – Indicates that a test is required	**PI (Project Inspector)** – Indicates that the special inspection may be performed by a project inspector when specifically approved by DSA.
	SI (Special Inspection) – Indicates that the special inspection shall be performed by an appropriately qualified/approved special inspector.

C5. POST-INSTALLED ANCHORS:

	Test or Special Inspection	Type	Performed By	Code References and Notes
☐	**a.** Inspect installation of post-installed anchors	See Notes	SI*	**1617A.1.19, Table 1705A.3 Item 4a (Continuous) & 4b (Periodic), 1705A.3.8** (See Appendix (end of this form) for exemptions). ACI 318-14 Sections 17.8 & 26.13. * May be performed by the project inspector when specifically approved by DSA.
☐	**b.** Test post-installed anchors.	Test	LOR	**1910A.5.** (See Appendix (end of this form) for exemptions.)

S/A1. STRUCTURAL STEEL, COLD-FORMED STEEL AND ALUMINUM USED FOR STRUCTURAL PURPOSES

	Test or Special Inspection	Type	Performed By	Code References and Notes
☑	**a.** Verify identification of all materials and: • Mill certificates indicate material properties that comply with requirements. • Material sizes, types and grades comply with requirements.	Periodic	*	**Table 1705A.2.1 Item 3a–3c.** 2202A.1; AISI S100-20 Section A3.1 & A3.2, AISI S240-20 Section A3 & A5, AISI S220-20 Sections A4 & A6. * By special inspector or qualified technician when performed off-site.
☑	**b.** Test unidentified materials	Test	LOR	**2202A.1.**
☑	**c.** Examine seam welds of HSS shapes	Periodic	SI	DSA IR 17-3.
☑	**d.** Verify and document steel fabrication per DSA-approved construction documents.	Periodic	SI	Not applicable to cold-formed steel light-frame construction, except for trusses (**1705A.2.4**).

S/A3. WELDING:

	Test or Special Inspection	Type	Performed By	Code References and Notes
☑	**a.** Verify weld filler material identification markings per AWS designation listed on the DSA-approved documents and the WPS.	Periodic	SI	**1705A.2.5, Table 1705A.2.1 Items 4 & 5:** AWS D1.1 and AWS D1.8 for structural steel; AWS D1.2 for Aluminum; AWS D1.3 for cold-formed steel; AWS D1.4 for reinforcing steel; DSA IR 17-3.
☑	**b.** Verify weld filler material manufacturer's certificate of compliance.	Periodic	SI	DSA IR 17-3.
☑	**c.** Verify WPS, welder qualifications and equipment.	Periodic	SI	DSA IR 17-3.

S/A4. SHOP WELDING (IN ADDITION TO SECTION S/A3):

	Test or Special Inspection	Type	Performed By	Code References and Notes
☑	**a.** Inspect groove welds, multi-pass fillet welds, single pass fillet welds > 5/16", plug and slot welds.	Continuous	SI	**Table 1705A.2.1 Items 5a.1–4;** AISC 360-16 (and AISC 341-16 as applicable); DSA IR 17-3.
☑	**b.** Inspect single-pass fillet welds ≤ 5/16", floor and roof deck welds.	Periodic	SI	**1705A.2.2, Table 1705A.2.1 Items 5a.5 & 5a.6;** AISC 360-16 (and AISC 341-16 as applicable); DSA IR 17-3.
☑	**c.** Inspect welding of stairs and railing systems.	Periodic	SI	**1705A.2.1;** AISC 360-16 (and AISC 341-16 as applicable); AWS D1.1 & D1.3; DSA IR 17-3.

1. Structural Testing and Inspection: Laboratory Verified Report Form DSA 291

2. Shop Welding Inspection: Laboratory Verified Report Form DSA 291, or, for independently contracting SI, Special Inspection Verified Report Form DSA 292

THE EXAMPLE OF FORM DSA-103s SHOWN ON THIS SHEET ARE FOR ILLUSTRATION PURPOSE ONLY. A FORM DSA-103 IS TO BE COMPLETED FOR EACH APPLICATION THAT THIS PC IS BEING INCORPORATED INTO AND ALL EXAMPLE FORM DSA-103s ARE TO BE CROSSED OUT ON THIS DRAWING.

Ramp Option Schedule:

option1 : ramp & landing @ building
(plan view 1/SR1)

option 2 : ramp and landing with offset ramp
(plan view 2/SR1)

option 3: ramp and platform landing
(plan view 3/SR1)

option 4 : ramp and landing with switch back ramp
(plan view 4/SR1)

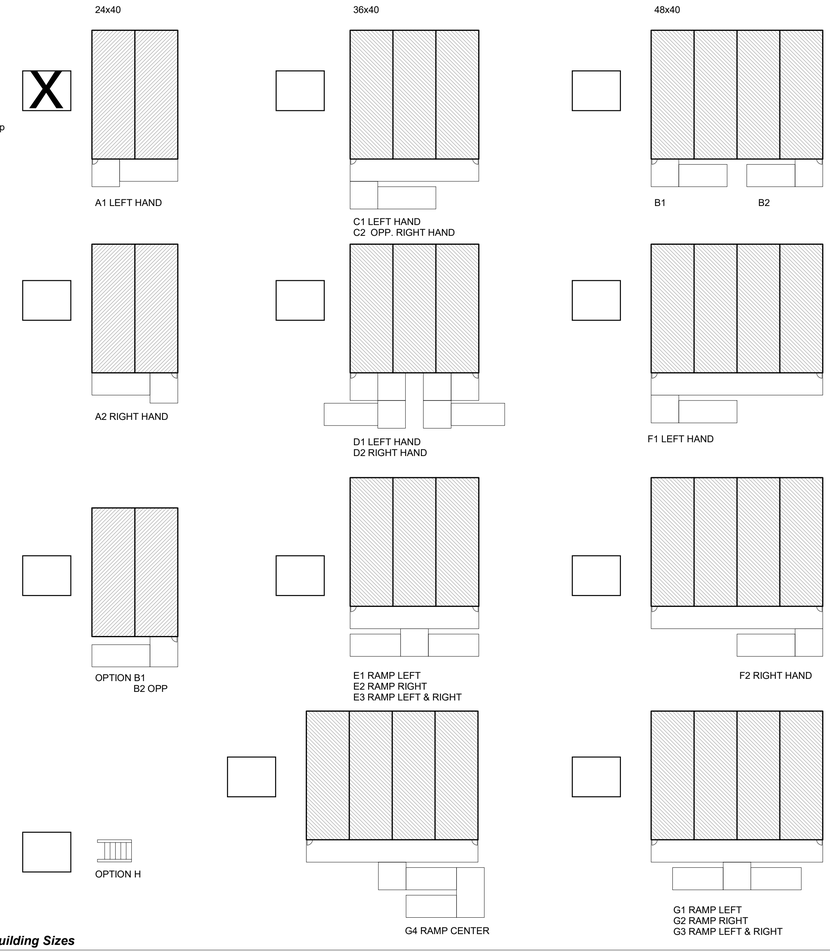

2 ***Ramps Options w/ Different Building Sizes***

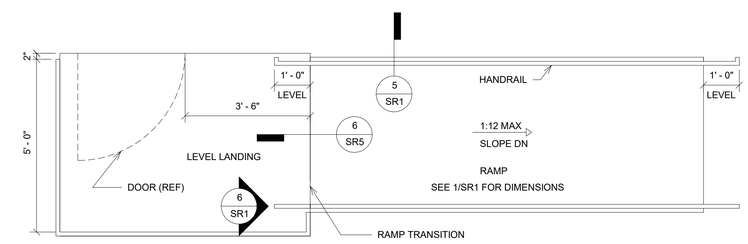

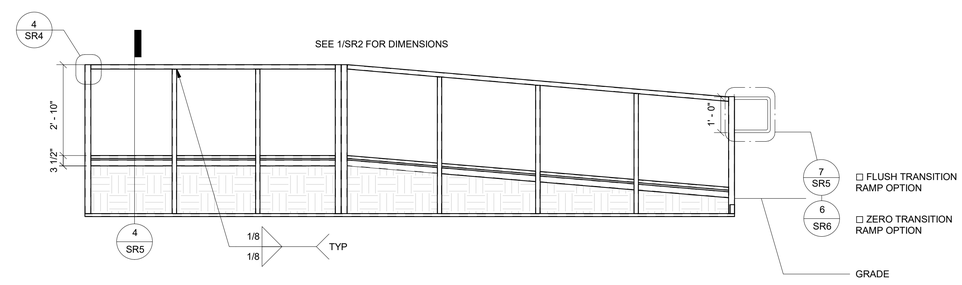

3 *1/2" = 1'-0"*
Standard Ramp

PROJECT SPECIFIC STATE AGENCY APPROVAL

IDENTIFICATION STAMP
DIV. OF THE STATE ARCHITECT
APP: 02-123433 INC:
REVIEWED FOR
SS ☑ FLS ☑ ACS ☑
DATE: 01/20/2026

R&S TAVARES ASSOCIATES
DESIGN ♦ CONSULTING ♦ PROJECT MGT
11590 W BERNARDO COURT, SUITE 100
SAN DIEGO, CA 92127
WWW.RSTAVARES.COM

PROFESSIONAL STAMP

REGISTERED PROFESSIONAL ENGINEER
NAVAID D. FARAHANI
S3385
Exp. 03/31/24
STRUCTURAL
STATE OF CALIFORNIA

02/16/24

THE PLANS, IDEAS & DESIGNS SHOWN ON THESE DRAWINGS ARE THE PROPERTY OF R&S TAVARES ASSOCIATES, INC. DEVISED SOLELY FOR THIS CONTRACT. THESE PLANS SHALL NOT BE USED, IN WHOLE OR IN PART, FOR ANY PURPOSE FOR WHICH THEY WERE NOT INTENDED WITHOUT THE EXPRESS WRITTEN CONSENT OF R&S TAVARES ASSOCIATES, INC. ©

CLIENT

Class Leasing
1320 W. Oleander Ave. Perris CA 92571-7408
VOICE (951) 943-1908 FAX Fax (951) 943-5768

ORIGINAL PC STATE AGENCY APPROVAL

APPROVED
DIV. OF THE STATE ARCHITECT
APP: 04-123059 PC
REVIEWED FOR
SS ☑ FLS ☑ ACS ☑ CG ☑
DATE: 02/20/2024

Revision Schedule

#	Description	Date22079

PRE-CHECK (PC) DOCUMENT

Code: 2022 CBC

A separate project application for construction is required

PROJECT TITLE
RAMPS PC
CLASS LEASING
PC#04-121419

SHEET TITLE
Module Plan and Notes (COVER SHEET)

PROJECT NUMBER
22079

DRAWN BY
SM

CHECKED BY
rMc

DATE
6/15/2021

SHEET NO.
SR0

SHEET OF

6/15/2021 7:29:24 PM M:\2020\22116 - Class Leasing, 24x40 - 120x40 2022 CBC Updates\REVITRST\#22116 - Aries, Ramps and Stairs PC.rvt

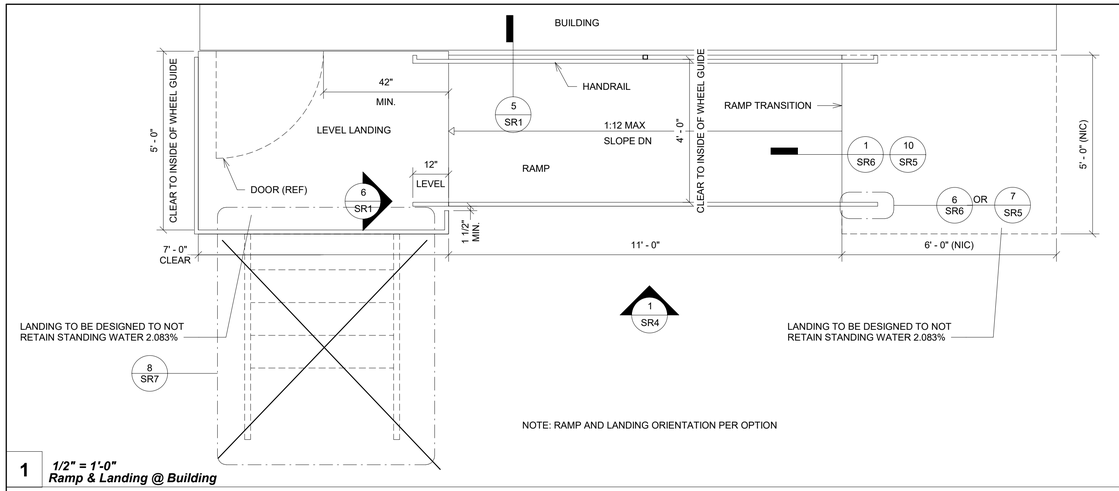

1 *1/2" = 1'-0"*
Ramp & Landing @ Building

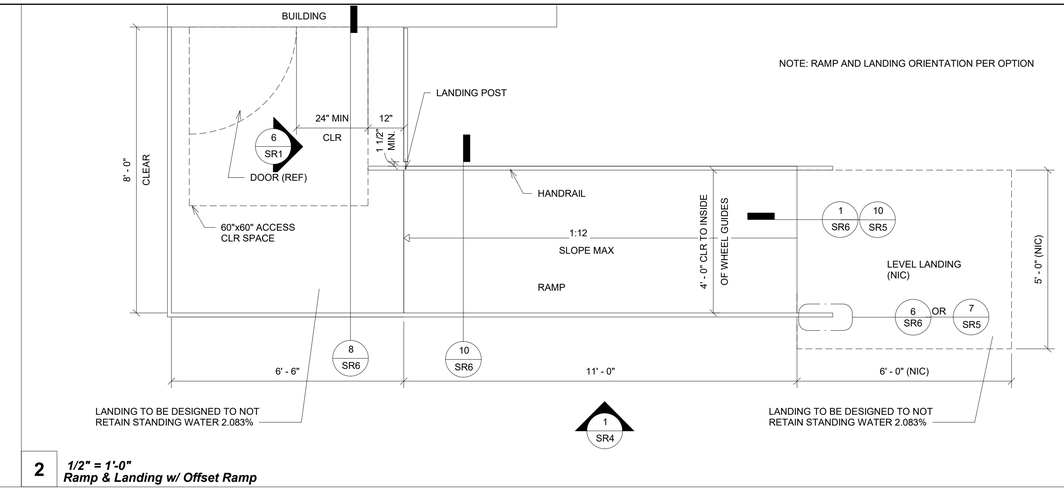

2 *1/2" = 1'-0"*
Ramp & Landing w/ Offset Ramp

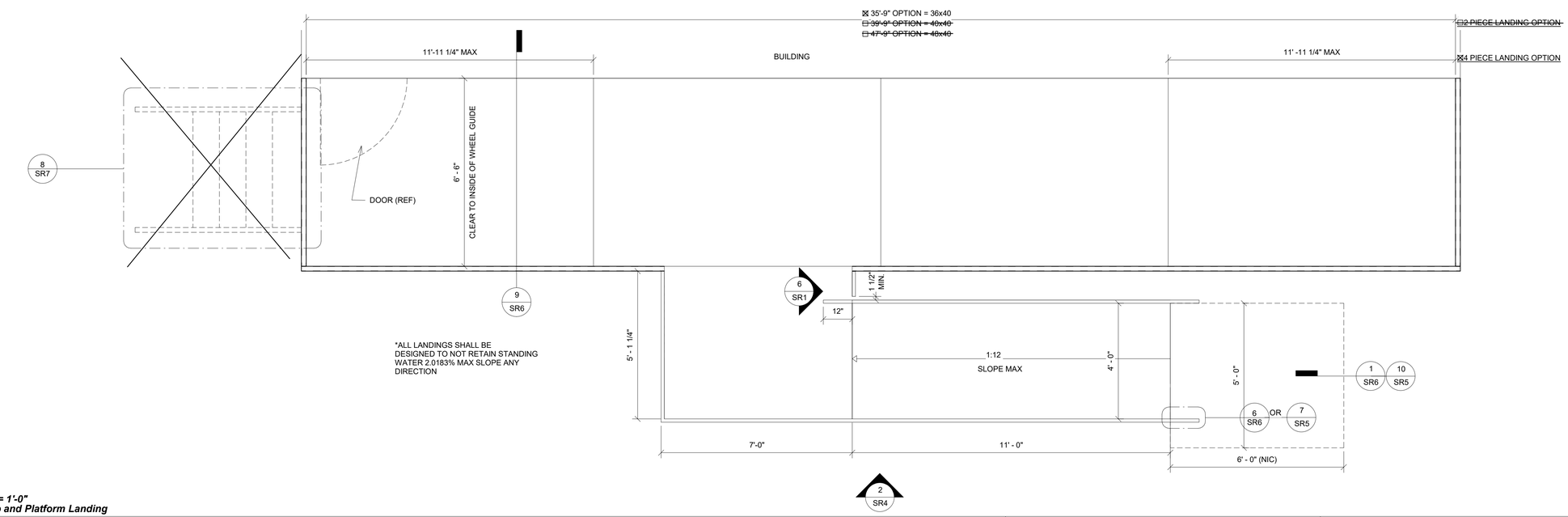

3 *1/2" = 1'-0"*
Ramp and Platform Landing

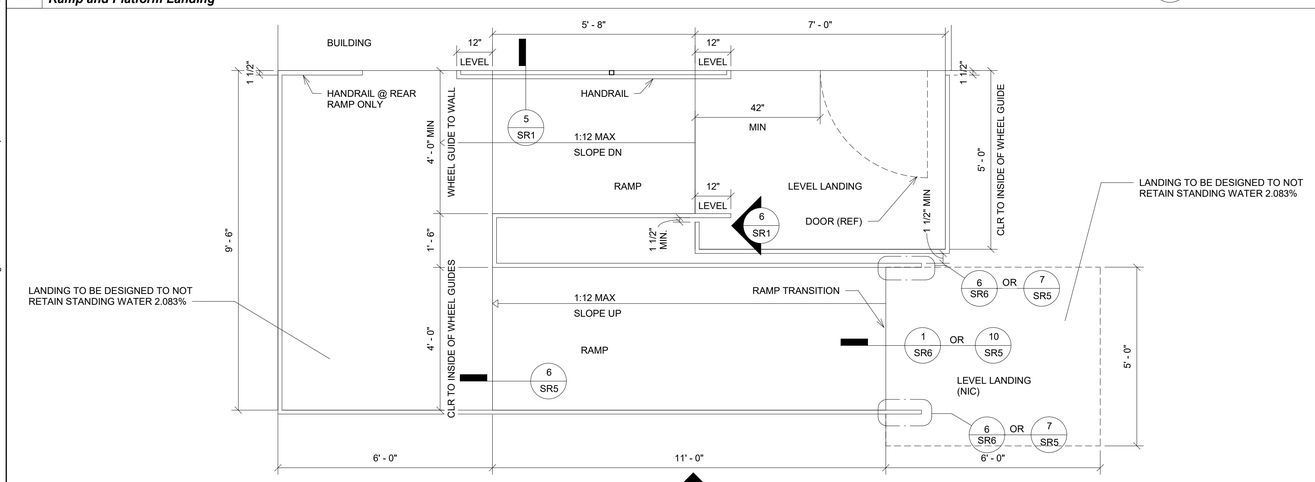

4 *1/2" = 1'-0"*
Ramp & Landing w/ Switch Back Ramp

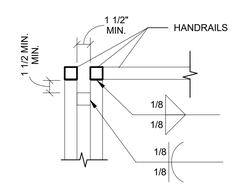

6 *1 1/2" = 1'-0"*
RAMP & LANDING CONNECTION @ RAILS

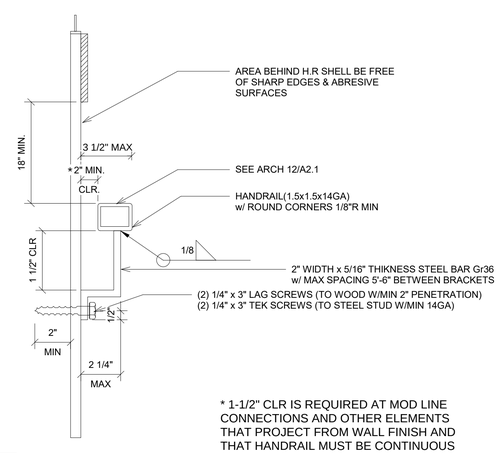

* 1-1/2" CLR IS REQUIRED AT MOD LINE CONNECTIONS AND OTHER ELEMENTS THAT PROJECT FROM WALL FINISH AND THAT HANDRAIL MUST BE CONTINUOUS (CANNOT CURVE AROUND PROJECTION)

5 *3" = 1'-0"*
Handrail

PROJECT SPECIFIC STATE AGENCY APPROVAL

IDENTIFICATION STAMP
DIV. OF THE STATE ARCHITECT
APP: 02-123433 INC:
REVIEWED FOR
SS ☑ FLS ☑ ACS ☑
DATE: 01/20/2026

R&S TAVARES ASSOCIATES
DESIGN ★ CONSULTING ★ PROJECT MGT
11590 W BERNARDO COURT, SUITE 100
SAN DIEGO, CA 92127
WWW.RSTAVARES.COM

PROFESSIONAL STAMP

REGISTERED PROFESSIONAL ENGINEER
MANAV D. PATEL
S3385
Exp. 03/31/24
STRUCTURAL
STATE OF CALIFORNIA

02/16/24

THE PLANS, IDEAS & DESIGNS SHOWN ON THESE DRAWINGS ARE THE PROPERTY OF R&S TAVARES ASSOCIATES, INC. DEVISED SOLELY FOR THIS CONTRACT. THESE PLANS SHALL NOT BE USED, IN WHOLE OR IN PART, FOR ANY PURPOSE FOR WHICH THEY WERE NOT INTENDED WITHOUT THE EXPRESS WRITTEN CONSENT OF R&S TAVARES ASSOCIATES, INC. ©

CLIENT

Class Leasing
1320 W. Oleander Ave. Perris CA 92571-7408
VOICE (951) 943-1908 FAX Fax (951) 943-5768

ORIGINAL PC STATE AGENCY APPROVAL

APPROVED
DIV. OF THE STATE ARCHITECT
APP: 04-123059 PC
REVIEWED FOR
SS ☑ FLS ☑ ACS ☑ CG ☑
DATE: 02/20/2024

Revision Schedule

#	Description	Date
		22079

PRE-CHECK (PC) DOCUMENT

Code: 2022 CBC

A separate project application for construction is required

PROJECT TITLE
RAMPS PC
CLASS LEASING
PC#04-121419

SHEET TITLE
Ramp and Landing Plan

PROJECT NUMBER
22079

DRAWN BY
SM

CHECKED BY
rMc

DATE
12/23/2022

SHEET NO.
SR1

SHEET OF

M:\2020\20093 - Class Leasing, 24x40 - 120x40 2022 CBC Updates\REVIT\RST#20093 - Aries, Ramps and Stairs PC.rvt

6/15/2021 7:29:25 PM

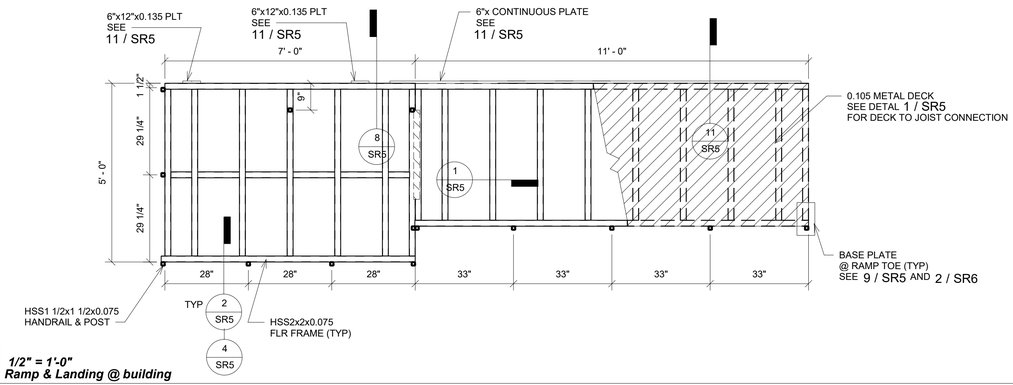

1 *1/2" = 1'-0"*
Ramp & Landing @ building

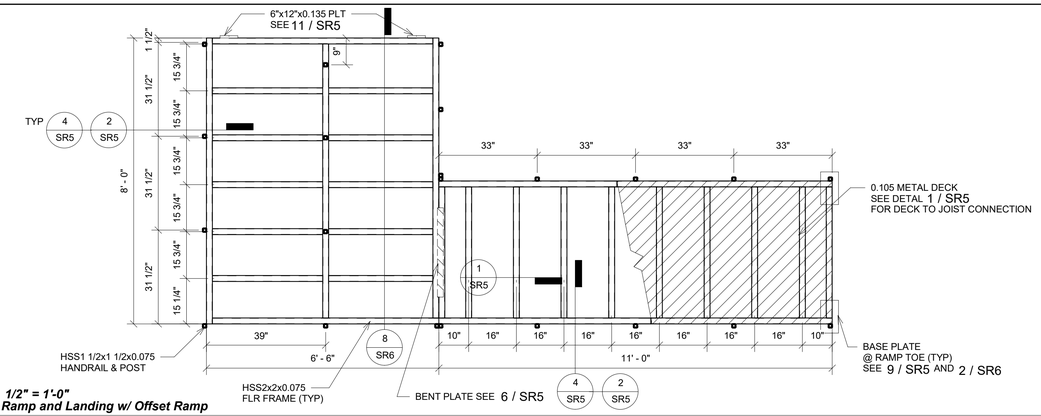

2 *1/2" = 1'-0"*
Ramp and Landing w/ Offset Ramp

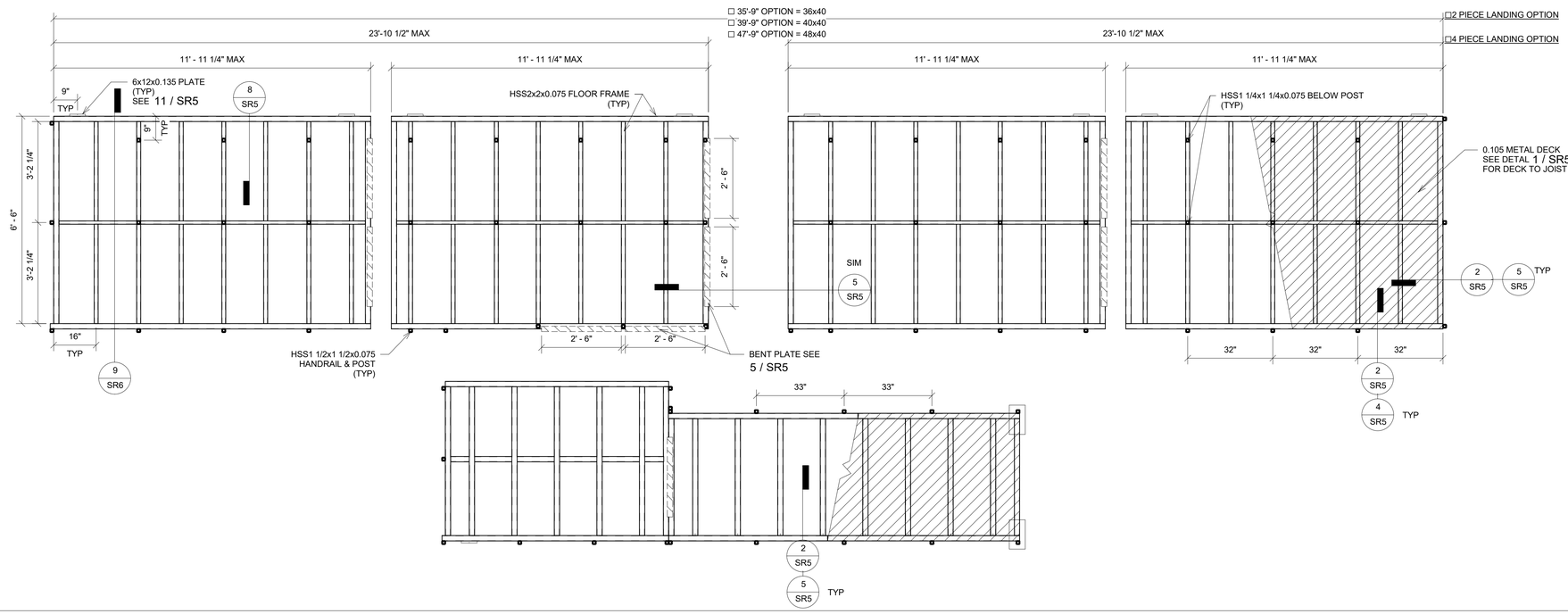

3 *1/2" = 1'-0"*
Ramp & Platform Landing Frame

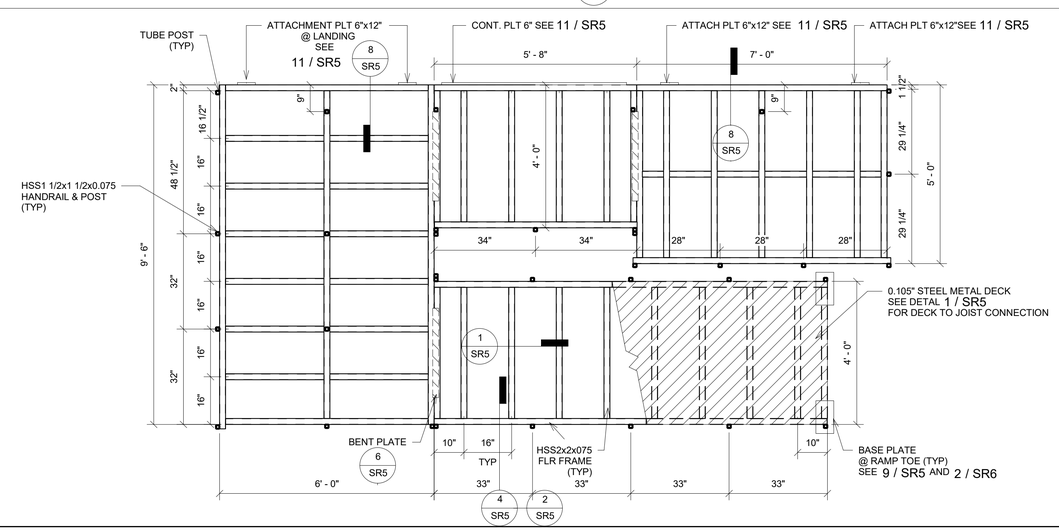

4 *1/2" = 1'-0"*
Ramp & Landing w/ Switch Back Ramp

PROJECT SPECIFIC STATE AGENCY APPROVAL

IDENTIFICATION STAMP
DIV. OF THE STATE ARCHITECT
APP: 02-123433 INC:
REVIEWED FOR
SS ☑ FLS ☑ ACS ☑
DATE: 01/20/2026

R&S TAVARES ASSOCIATES
DESIGN ● CONSULTING ● PROJECT MGT
11590 W BERNARDO COURT, SUITE 100
SAN DIEGO, CA 92127
WWW.RSTAVARES.COM

PROFESSIONAL STAMP

REGISTERED PROFESSIONAL ENGINEER
MANNY D. FERNANDEZ
No. S3385
Exp. 03/31/24
STRUCTURAL
STATE OF CALIFORNIA

02/16/24

THE PLANS, IDEAS & DESIGNS SHOWN ON THESE DRAWINGS ARE THE PROPERTY OF R&S TAVARES ASSOCIATES, INC. DEVISED SOLELY FOR THIS CONTRACT. THESE PLANS SHALL NOT BE USED, IN WHOLE OR IN PART, FOR ANY PURPOSE FOR WHICH THEY WERE NOT INTENDED WITHOUT THE EXPRESS WRITTEN CONSENT OF R&S TAVARES ASSOCIATES, INC. ©

CLIENT

Class Leasing
1320 W. Oleander Ave. Perris CA 92571-7408
VOICE (951) 943-1908 FAX Fax (951) 943-5768

ORIGINAL PC STATE AGENCY APPROVAL

APPROVED
DIV. OF THE STATE ARCHITECT
APP: 04-123059 PC
REVIEWED FOR
SS ☑ FLS ☑ ACS ☑ CG ☑
DATE: 02/20/2024

Revision Schedule

#	Description	Date22079

PRE-CHECK (PC) DOCUMENT

Code: 2022 CBC

A separate project application for construction is required

PROJECT TITLE
RAMPS PC
CLASS LEASING
PC#04-121419

SHEET TITLE
Ramp and Landing Framing

PROJECT NUMBER
22079

DRAWN BY
SM

CHECKED BY
BR/rMc

DATE
12/23/2022

SHEET NO.
SR2

SHEET OF

6/15/2021 7:29:26 PM M:\2020\20093 - Class Leasing, 24x40 - 120x40 2022 CBC Updates\REVIT\RST#20093 - Aries, Ramps and Stairs PC.rvt

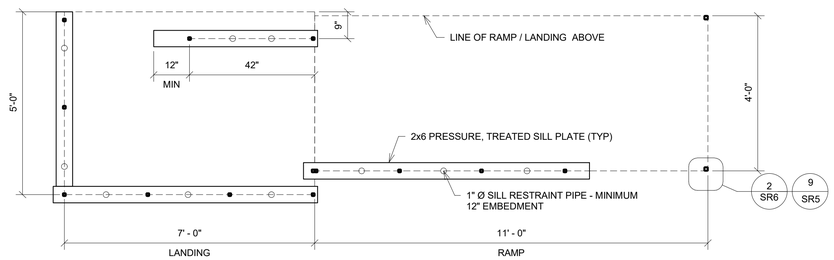

1 *1/2" = 1'-0"*
Sill Plan For Ramp & Landing

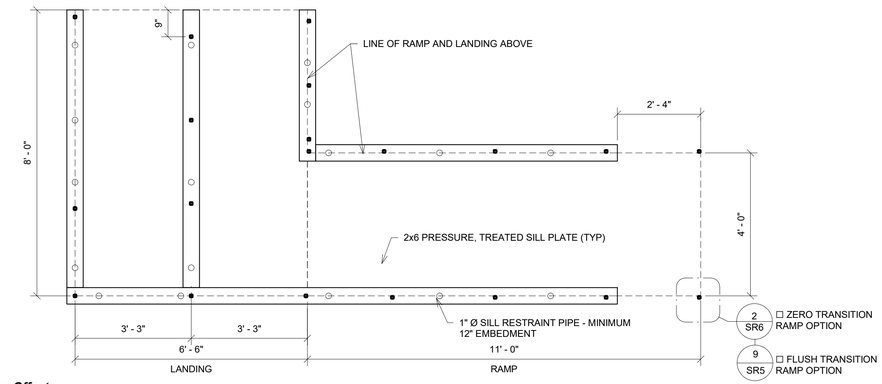

2 *1/2" = 1'-0"*
Sill Plan For Ramp & Landing Offset

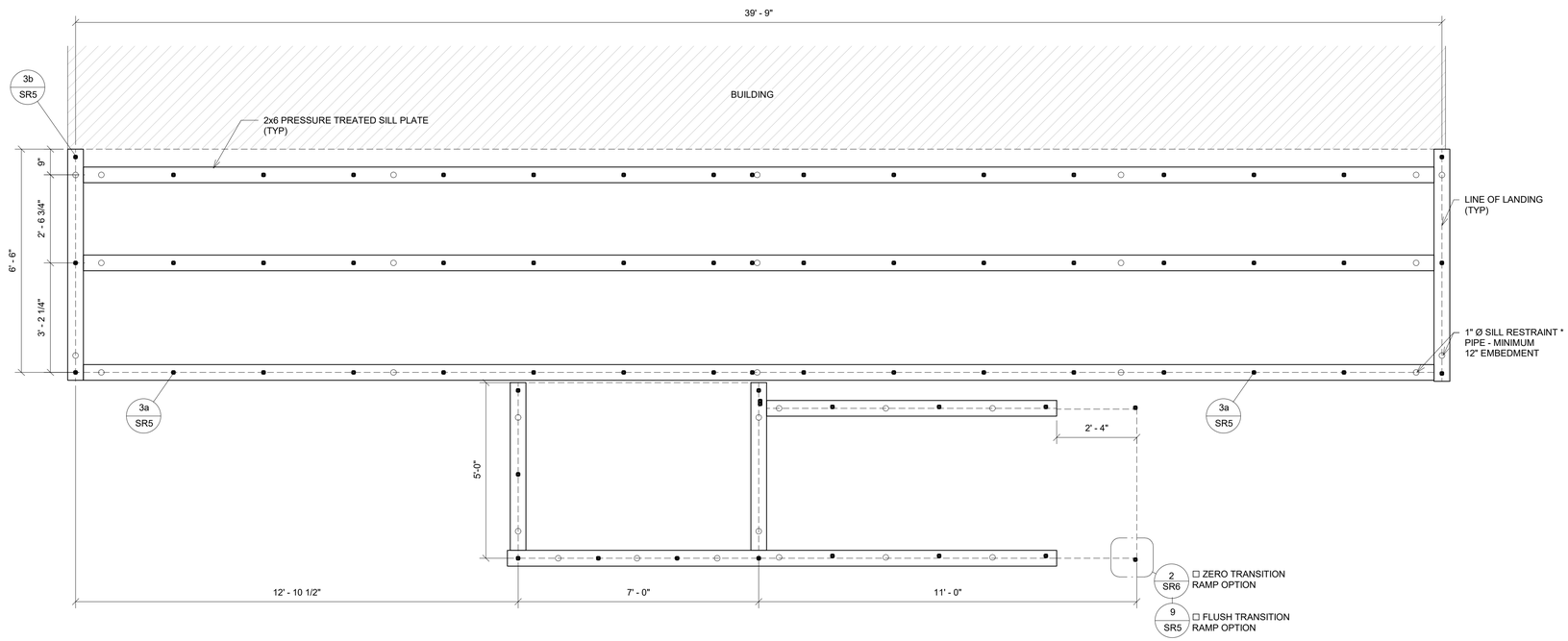

3 *1/2" = 1'-0"*
Platform Sill Plan For Ramp & Landing

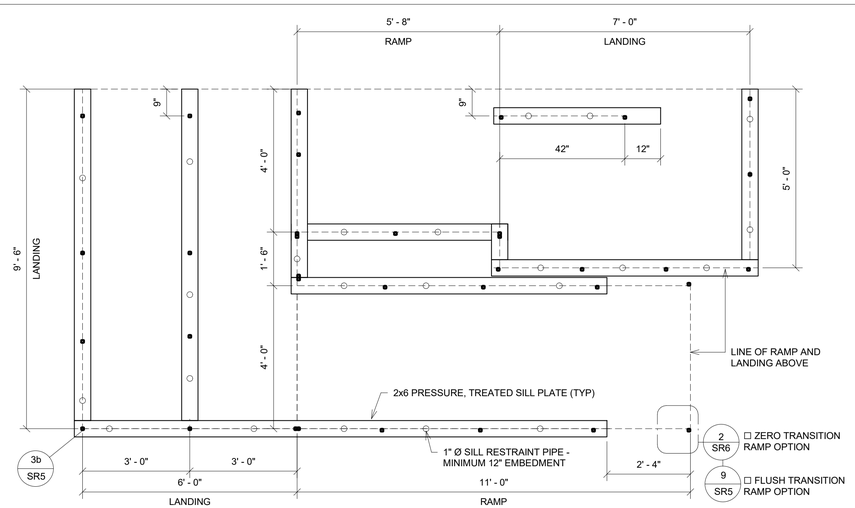

4 *1/2" = 1'-0"*
Sill Plan For Ramp & Landing Switchback

* "RESTRAINING PIPES / RODS SPECS"
ONE INCH DIAMETER STANDARD WEIGHT (1.315" ACTUAL 0.0) NOT DIPPED GALVANIZED PIPES OR ONE INCH DIAMETER SOLID STEEL RODS SPACED AT NOT MORE THAN 10'-0" o/c.
ONE PIPE / ROD SHALL BE LOCATED A MAXIMUM OF TWO FEET FROM EACH CORNERIN BOTH DIRECTIONS AND MINIMUM OF TWO PIPES / RODS PER DISCONTINUOUS FOUNDATION STRIP.
PIPES SHOULD PENETRATE INTO SOIL AND/OR PAVING A MIN. OF 12" MEASURED VERTICALLY.
PER DSA IR 16-1

PROJECT SPECIFIC STATE AGENCY APPROVAL

IDENTIFICATION STAMP
DIV. OF THE STATE ARCHITECT
APP: 02-123433 INC: A
REVIEWED FOR
SS ☑ FLS ☑ ACS ☑
DATE: 01/20/2026

R&S TAVARES ASSOCIATES
DESIGN ● CONSULTING ● PROJECT MGT
11590 W Bernardo Court, Suite 100
San Diego, CA 92127
www.rstavares.com

PROFESSIONAL STAMP

REGISTERED PROFESSIONAL ENGINEER
MANAV D. FAGNANI
S3385
Exp. 03/31/24
STRUCTURAL
STATE OF CALIFORNIA

02/16/24

THE PLANS, IDEAS & DESIGNS SHOWN ON THESE DRAWINGS ARE THE PROPERTY OF R&S TAVARES ASSOCIATES, INC. DEVISED SOLELY FOR THIS CONTRACT. THESE PLANS SHALL NOT BE USED, IN WHOLE OR IN PART, FOR ANY PURPOSE FOR WHICH THEY WERE NOT INTENDED WITHOUT THE EXPRESS WRITTEN CONSENT OF R&S TAVARES ASSOCIATES, INC. ©

CLIENT

Class Leasing
1320 W. Oleander Ave. Perris CA 92571-7408
VOICE (951) 943-1908 FAX Fax (951) 943-5768

ORIGINAL PC STATE AGENCY APPROVAL

APPROVED
DIV. OF THE STATE ARCHITECT
APP: 04-123059 PC
REVIEWED FOR
SS ☑ FLS ☑ ACS ☑ CG ☑
DATE: 02/20/2024

Revision Schedule

#	Description	Date22079

PRE-CHECK (PC) DOCUMENT

Code: 2022 CBC

A separate project application for construction is required

PROJECT TITLE
RAMPS PC
CLASS LEASING
PC#04-121419

SHEET TITLE
Foundation Plan

PROJECT NUMBER
22079

DRAWN BY
SM

CHECKED BY
rMc

DATE
12/23/2022

SHEET NO.
SR3

SHEET OF

M:\2020\20093 - Class Leasing, 24x40 - 120x40 2022 CBC Updates\REVIT\RST#20093 - Aries, Ramps and Stairs PC.rvt

6/15/2021 7:29:26 PM

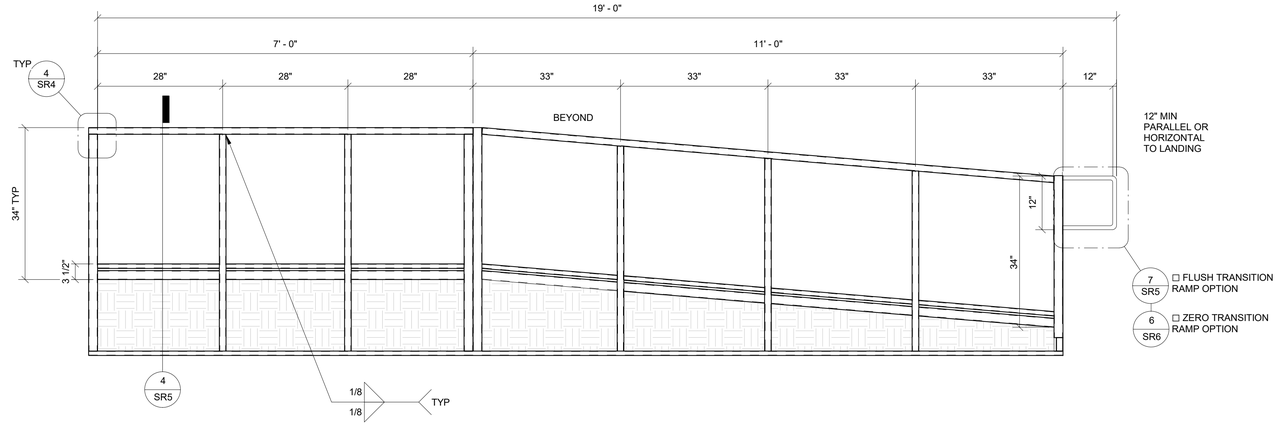

1 *3/4" = 1'-0"*
Ramp & Landing Elevation

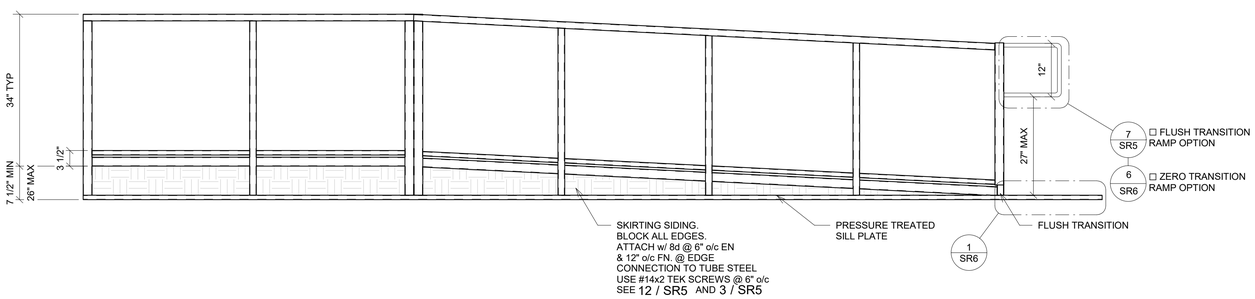

2 *3/4" = 1'-0"*
Ramp & Landing Elevation Option X Copy 1

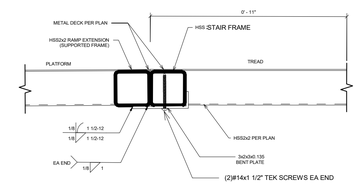

5 *3" = 1'-0"*
Conn @ Platform

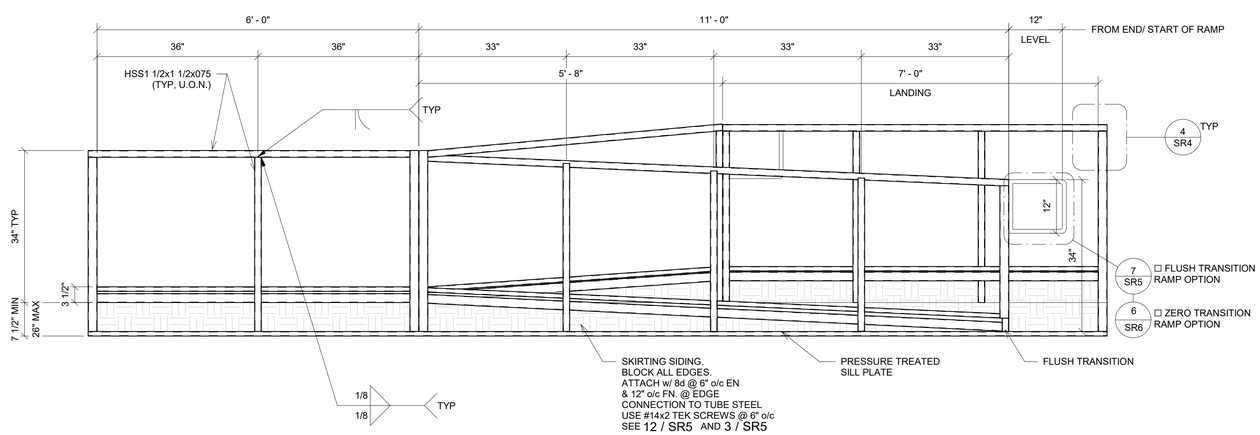

3 *3/4" = 1'-0"*
Ramp & Landing Elevation Option X

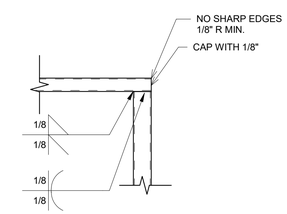

4 *1 1/2" = 1'-0"*
Ramp & Landing Elevation Option X1 - Callout 1

PROJECT SPECIFIC STATE AGENCY APPROVAL

IDENTIFICATION STAMP
DIV. OF THE STATE ARCHITECT
APP: 02-123433 INC:
REVIEWED FOR
SS ☑ FLS ☑ ACS ☑
DATE: 01/20/2026

R&S TAVARES ASSOCIATES
DESIGN ♦ CONSULTING ♦ PROJECT MGT
11590 W Bernardo Court, Suite 100
San Diego, CA 92127
www.rstavares.com

PROFESSIONAL STAMP

REGISTERED PROFESSIONAL ENGINEER
MANAV D. PATEL
S3385
Exp. 03/31/24
STRUCTURAL
STATE OF CALIFORNIA

02/16/24

THE PLANS, IDEAS & DESIGNS SHOWN ON THESE DRAWINGS ARE THE PROPERTY OF R&S TAVARES ASSOCIATES, INC. DEVISED SOLELY FOR THIS CONTRACT. THESE PLANS SHALL NOT BE USED, IN WHOLE OR IN PART, FOR ANY PURPOSE FOR WHICH THEY WERE NOT INTENDED WITHOUT THE EXPRESS WRITTEN CONSENT OF R&S TAVARES ASSOCIATES, INC. ©

CLIENT

Class Leasing
1320 W. Oleander Ave. Perris CA 92571-7408
VOICE (951) 943-1908 FAX Fax (951) 943-5768

ORIGINAL PC STATE AGENCY APPROVAL

APPROVED
DIV. OF THE STATE ARCHITECT
APP: 04-123059 PC
REVIEWED FOR
SS ☑ FLS ☑ ACS ☑ CG ☑
DATE: 02/20/2024

Revision Schedule

#	Description	Date22079

PRE-CHECK (PC) DOCUMENT

Code: 2022 CBC

A separate project application for construction is required

PROJECT TITLE

RAMPS PC
CLASS LEASING
PC#04-121419

SHEET TITLE

Ramp and Landing / Stair Framing Elevation

PROJECT NUMBER: 22079

DRAWN BY: SM

CHECKED BY: rMc

DATE: 12/23/2022

SHEET NO.

SR4

SHEET OF

M:\2020\20093 - Class Leasing, 24x40 - 120x40 2022 CBC Updates\REVIT\RST#20093 - Aries, Ramps and Stairs PC.rvt

6/15/2021 7:29:27 PM

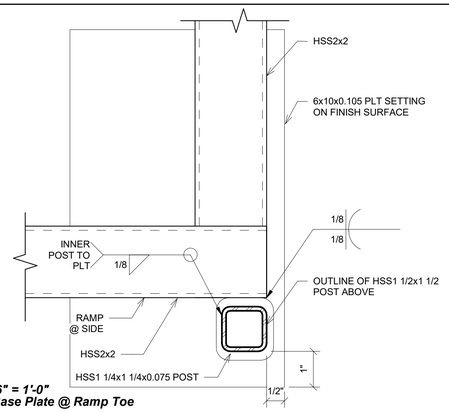

9 *6" = 1'-0"*
Base Plate @ Ramp Toe

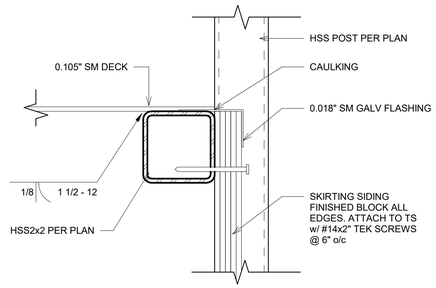

12 *6" = 1'-0"*
Skirt Flashing

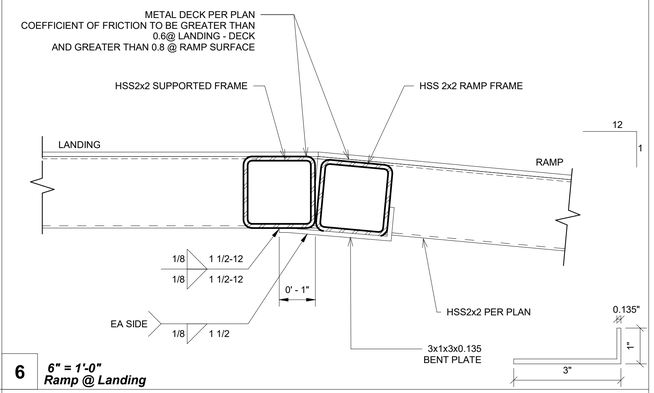

6 *6" = 1'-0"*
Ramp @ Landing

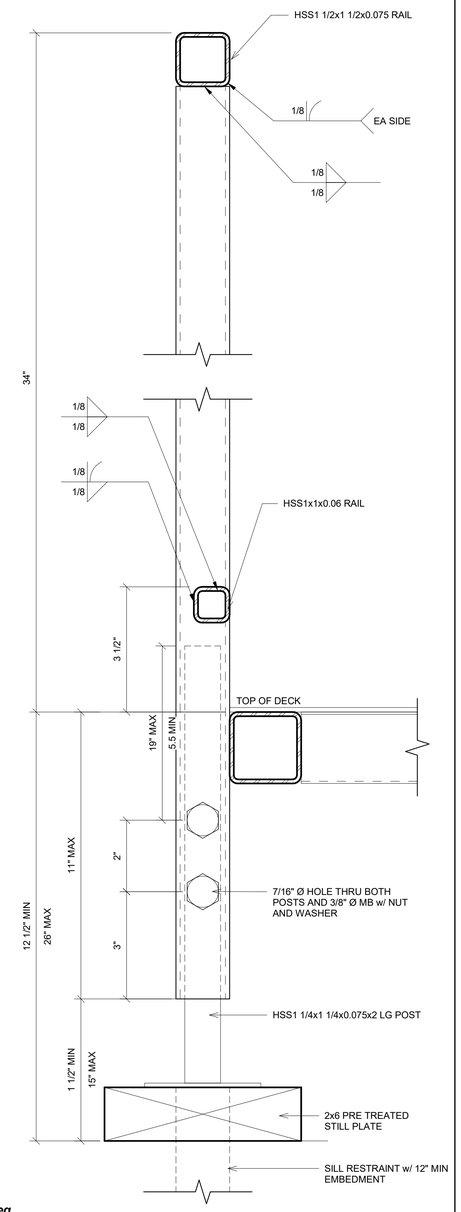

2 *6" = 1'-0"*
Adjustable Leg

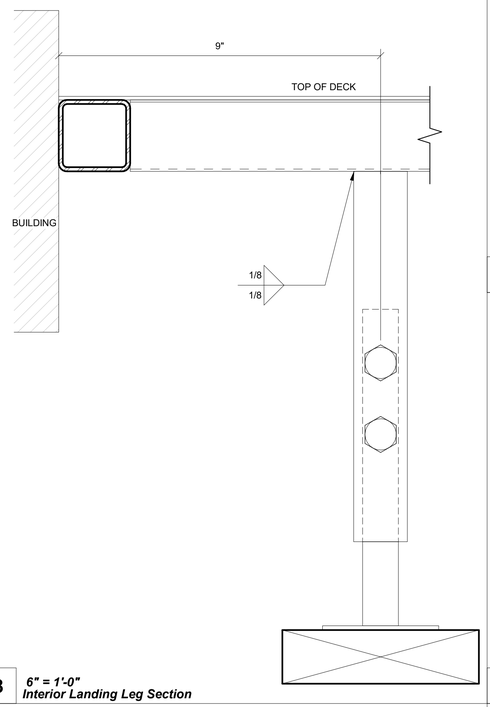

8 *6" = 1'-0"*
Interior Landing Leg Section

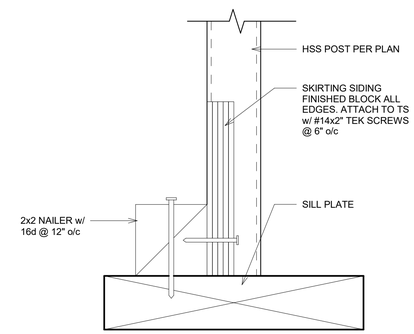

3 *6" = 1'-0"*
Skirt Flashing @ Sill Plate

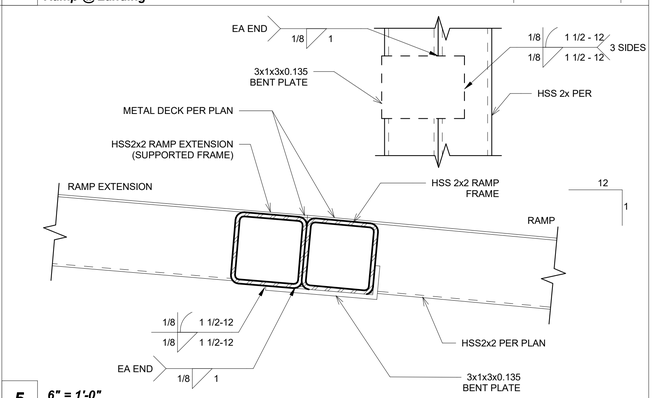

5 *6" = 1'-0"*
Ramp Extension

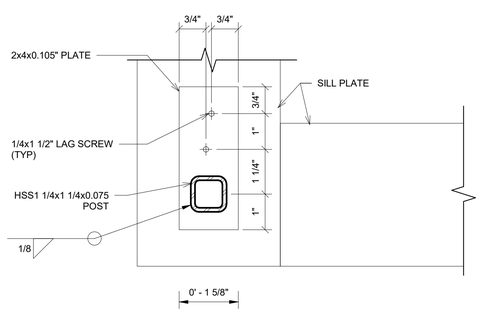

3b *6" = 1'-0"*
Adjustable Leg Base Plate

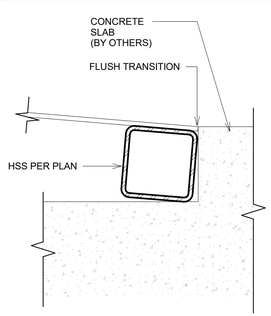

10 *6" = 1'-0"*
Flush Transition @ Bottom of Ramp

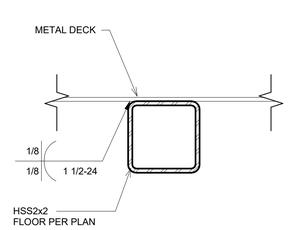

1 *6" = 1'-0"*
Deck to Frame

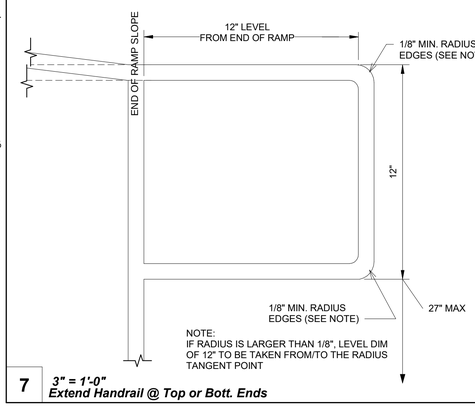

7 *3" = 1'-0"*
Extend Handrail @ Top or Bott. Ends

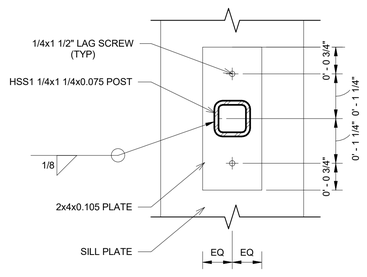

3a *6" = 1'-0"*
Adjustable Leg Plate

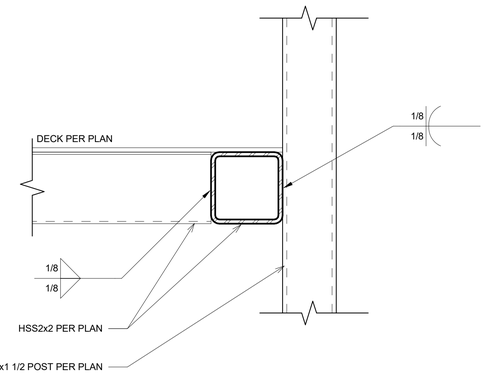

4 *6" = 1'-0"*
Guardrail post Attachment

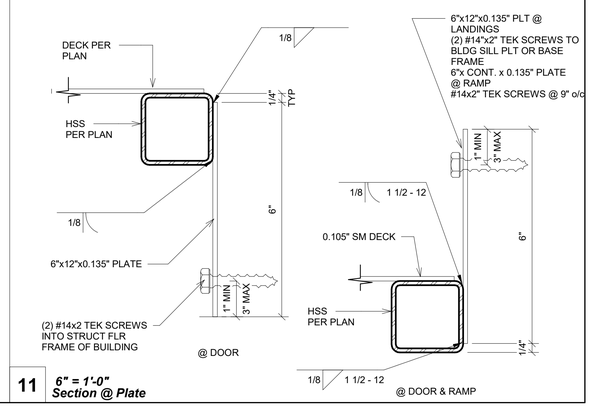

11 *6" = 1'-0"*
Section @ Plate

PROJECT SPECIFIC STATE AGENCY APPROVAL

IDENTIFICATION STAMP
DIV. OF THE STATE ARCHITECT
APP: 02-123433 INC:
REVIEWED FOR
SS ☑ FLS ☑ ACS ☑
DATE: 01/20/2026

R&S TAVARES ASSOCIATES
DESIGN ♦ CONSULTING ♦ PROJECT MGT
11590 W BERNARDO COURT, SUITE 100
SAN DIEGO, CA 92127
WWW.RSTAVARES.COM

PROFESSIONAL STAMP

REGISTERED PROFESSIONAL ENGINEER
MANAV D. FAGNANI
S3385
Exp. 03/31/24
STRUCTURAL
STATE OF CALIFORNIA

02/16/24

THE PLANS, IDEAS & DESIGNS SHOWN ON THESE DRAWINGS ARE THE PROPERTY OF R&S TAVARES ASSOCIATES, INC. DEVISED SOLELY FOR THIS CONTRACT. THESE PLANS SHALL NOT BE USED, IN WHOLE OR IN PART, FOR ANY PURPOSE FOR WHICH THEY WERE NOT INTENDED WITHOUT THE EXPRESS WRITTEN CONSENT OF R&S TAVARES ASSOCIATES, INC. ©

CLIENT

Class Leasing
1320 W. Oleander Ave. Perris CA 92571-7408
VOICE (951) 943-1908 FAX Fax (951) 943-5768

ORIGINAL PC STATE AGENCY APPROVAL

APPROVED
DIV. OF THE STATE ARCHITECT
APP: 04-123059 PC
REVIEWED FOR
SS ☑ FLS ☑ ACS ☑ CG ☑
DATE: 02/20/2024

Revision Schedule

#	Description	Date
		22079

PRE-CHECK (PC) DOCUMENT

Code: 2022 CBC

A separate project application for construction is required

PROJECT TITLE
RAMPS PC
CLASS LEASING
PC#04-121419

SHEET TITLE
Ramp Details

PROJECT NUMBER
22079

DRAWN BY
SM

CHECKED BY
rMc

DATE
12/23/2022

SHEET NO.
SR5

SHEET OF

M:\2020\20093 - Class Leasing, 24x40 - 120x40 2022 CBC Updates\REVITRST#20093 - Aries, Ramps and Stairs PC.rvt
6/15/2021 7:29:28 PM

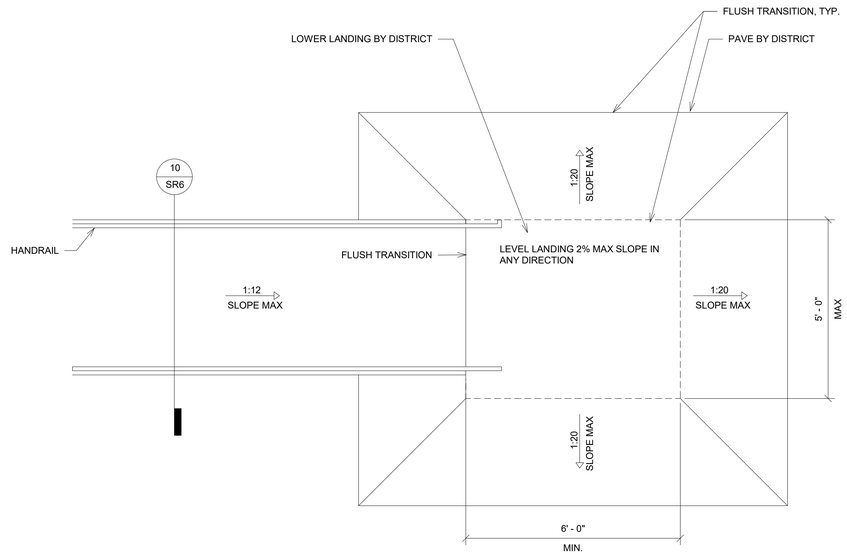

NOTE:
1. 1:20 TRANSITION OFF OF LOWER LANDING REQUIRES NO HANDRAIL.
2. TRANSITIONS EXCEEDING 1:20 BUT NOT EXCEED 1:12 REQUIRE REMOVAL OF 12" HANDRAIL EXTENSION AND ADDITIONAL HANDRAILING BY DISTRICT. (THIS CONDITION REQUIRES A SITE SPECIFIC DETAIL PROVIDED BY ARCHITECT TO DEMOSTRATE ACCESSIBLE RAMP)

LANDING TO BE DESIGNED TO NOT RETAIN STANDING WATER 1% 1% 2.083 MAX SLOPE

7 *1/2" = 1'-0"*
Ramp Transition

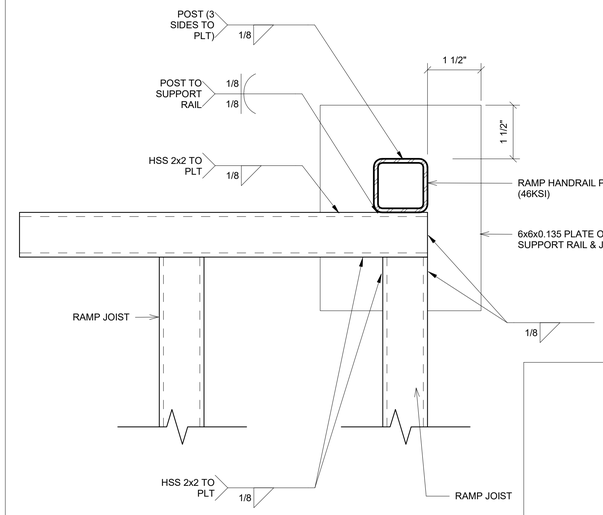

2 *6" = 1'-0"*
Base Plt @ Ramp Toe For Zero Transition

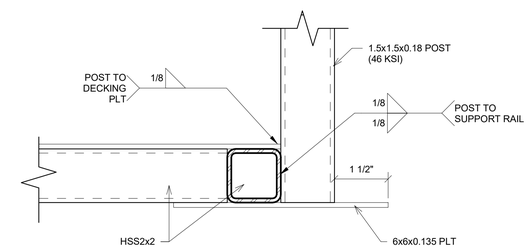

3 *6" = 1'-0"*
Base Plt @ Ramp Toe Low Zero Side View

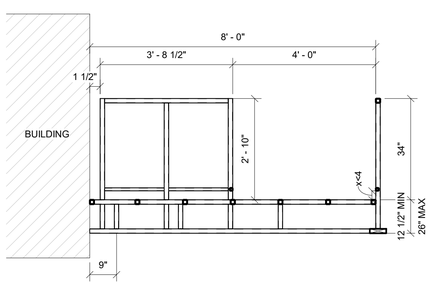

8 *1/2" = 1'-0"*
Section @ Landing

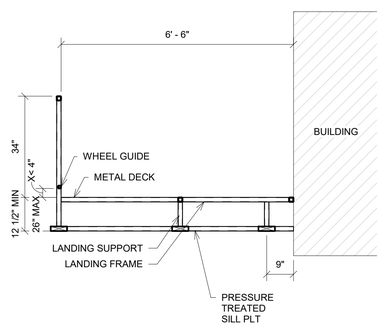

9 *1/2" = 1'-0"*
Section @ Landing

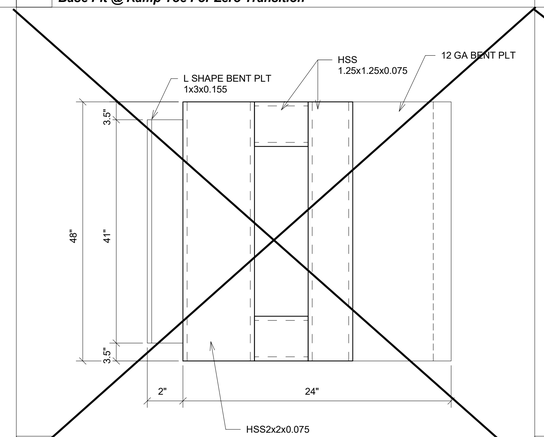

4 *6" = 1'-0"*
Top View Ramp Zero Transition

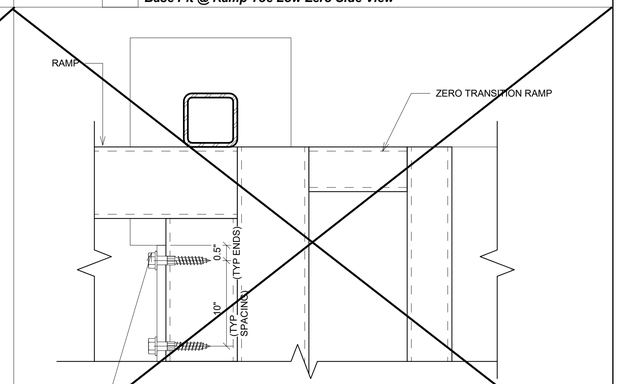

5 *6" = 1'-0"*
Zero Transition Ramp Connection

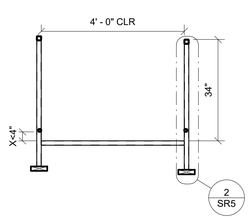

10 *1/2" = 1'-0"*
Section @ Ramp

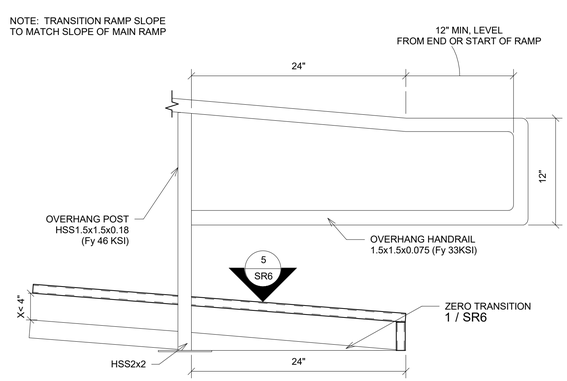

6 *1 1/2" = 1'-0"*
Extend Handrail @ Bottom End For Zero Transition Ramp

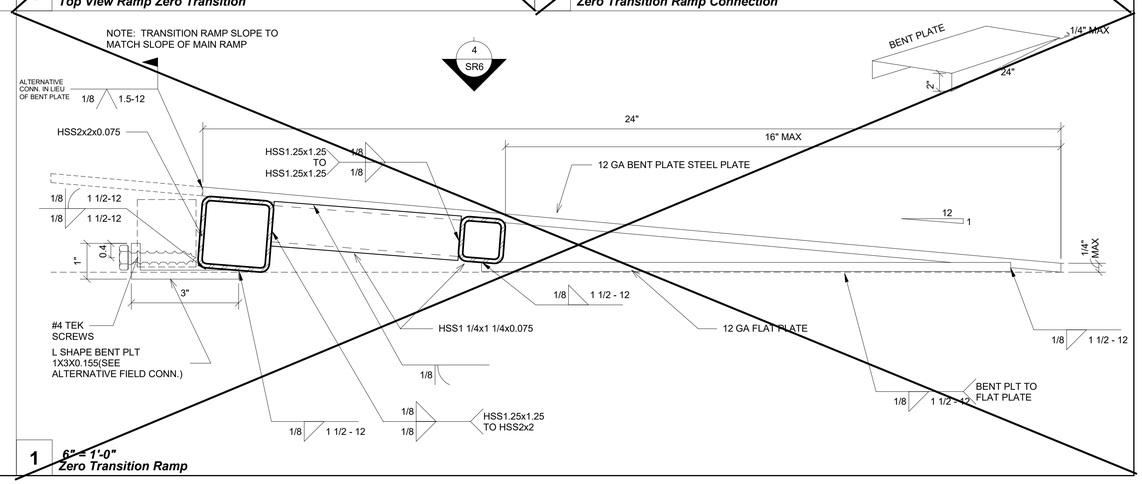

1 *6" = 1'-0"*
Zero Transition Ramp

PROJECT SPECIFIC STATE AGENCY APPROVAL

IDENTIFICATION STAMP
DIV. OF THE STATE ARCHITECT
APP: 02-123433 INC:
REVIEWED FOR
SS ☑ FLS ☑ ACS ☑
DATE: 01/20/2026

R&S TAVARES ASSOCIATES
DESIGN ● CONSULTING ● PROJECT MGT
11590 W BERNARDO COURT, SUITE 100
SAN DIEGO, CA 92127
WWW.RSTAVARES.COM

PROFESSIONAL STAMP

REGISTERED PROFESSIONAL ENGINEER
MANAV D. PARIKH
S3383
Exp. 03/31/24
STRUCTURAL
STATE OF CALIFORNIA

02/16/24

THE PLANS, IDEAS & DESIGNS SHOWN ON THESE DRAWINGS ARE THE PROPERTY OF R&S TAVARES ASSOCIATES, INC. DEVISED SOLELY FOR THIS CONTRACT. THESE PLANS SHALL NOT BE USED, IN WHOLE OR IN PART, FOR ANY PURPOSE FOR WHICH THEY WERE NOT INTENDED WITHOUT THE EXPRESS WRITTEN CONSENT OF R&S TAVARES ASSOCIATES, INC. ©

CLIENT

Class Leasing
1320 W. Oleander Ave. Perris CA 92571-7408
VOICE (951) 943-1908 FAX Fax (951) 943-5768

ORIGINAL PC STATE AGENCY APPROVAL

APPROVED
DIV. OF THE STATE ARCHITECT
APP: 04-123059 PC
REVIEWED FOR
SS ☑ FLS ☑ ACS ☑ CG ☑
DATE: 02/20/2024

Revision Schedule

#	Description	Date
		22079

PRE-CHECK (PC) DOCUMENT

Code: 2022 CBC

A separate project application for construction is required

PROJECT TITLE
RAMPS PC
CLASS LEASING
PC#04-121419

SHEET TITLE
Ramp Details

PROJECT NUMBER
22079

DRAWN BY
SM

CHECKED BY
rMc

DATE
12/23/2022

SHEET NO.
SR6

SHEET OF

M:\2020\20093 - Class Leasing, 24x40 - 120x40 2022 CBC Updates\REVITFIRST\#20093 - Aries, Ramps and Stairs PC.rvt
6/15/2021 7:29:30 PM

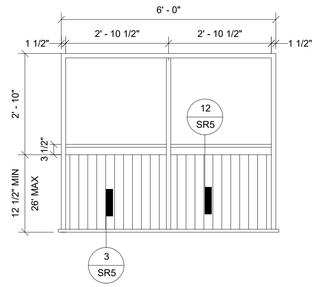

1 *1/2" = 1'-0"*
LANDING ELEVATION VIEW

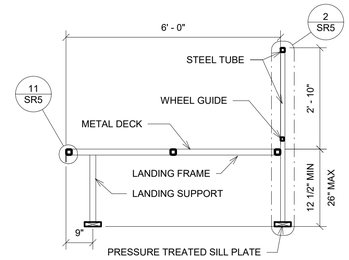

2 *1/2" = 1'-0"*
LANDING SECTION

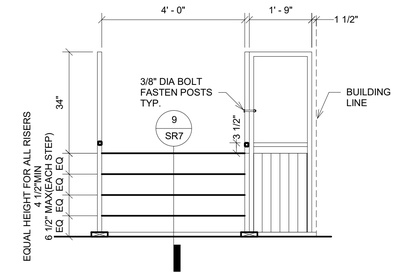

6 *1/2" = 1'-0"*
STEPS ELEVATION

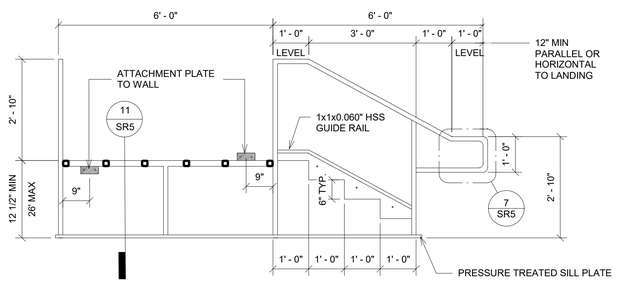

*THE TRIANGULAR OPENING AT THE OPEN SIDES OF A STAIR,FORMED BY THE RISER, TREAD, AND BOTTOM RAIL SHALL NOT ALLOW PASSAGE OF A SPHERE 6 INCHES IN DIAMETER PER CBC 1015.4(TYP)

3 *1/2" = 1'-0"*
STEP AND LANDING SECTION

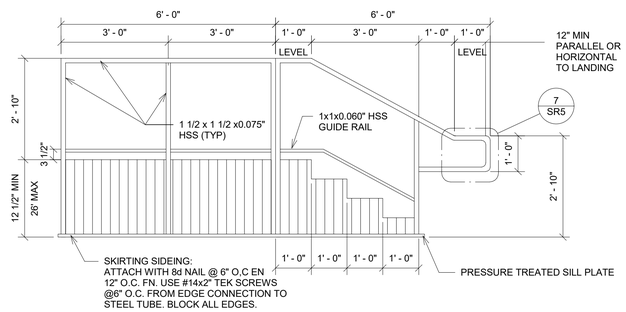

4 *1/2" = 1'-0"*
STEPS AND LANDING SECTION

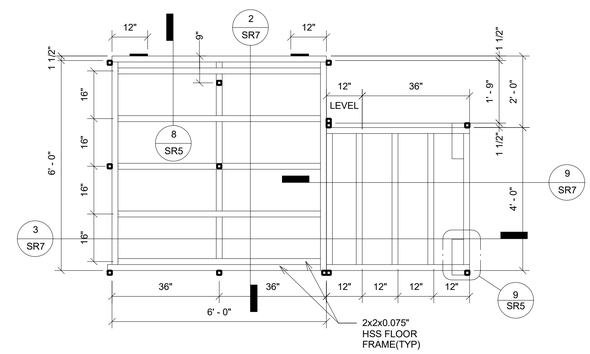

5 *1/2" = 1'-0"*
STEPS/LANDING FRAMING PLAN

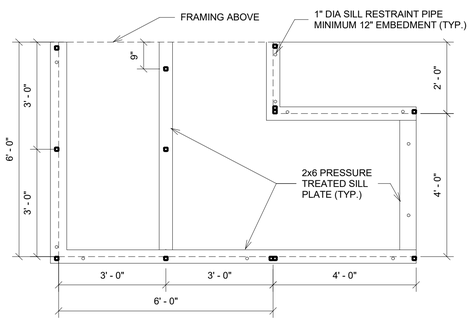

7 *1/2" = 1'-0"*
SILL PLAN

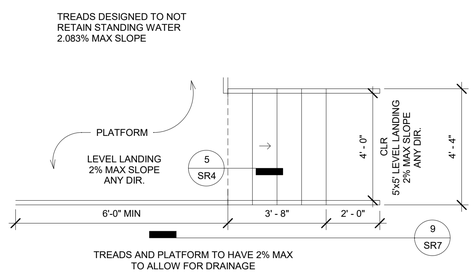

8 *3/8" = 1'-0"*
Stair

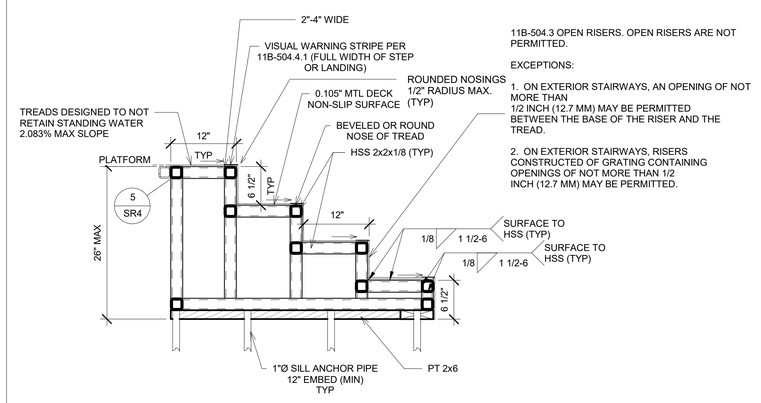

11B-504.3 OPEN RISERS. OPEN RISERS ARE NOT PERMITTED.

EXCEPTIONS:

1. ON EXTERIOR STAIRWAYS, AN OPENING OF NOT MORE THAN 1/2 INCH (12.7 MM) MAY BE PERMITTED BETWEEN THE BASE OF THE RISER AND THE TREAD.

2. ON EXTERIOR STAIRWAYS, RISERS CONSTRUCTED OF GRATING CONTAINING OPENINGS OF NOT MORE THAN 1/2 INCH (12.7 MM) MAY BE PERMITTED.

9 *1" = 1'-0"*
Stair Elev

PROJECT SPECIFIC STATE AGENCY APPROVAL

IDENTIFICATION STAMP
DIV. OF THE STATE ARCHITECT
APP: 02-123433 INC:
REVIEWED FOR
SS ☑ FLS ☑ ACS ☑
DATE: 01/20/2026

R&S TAVARES ASSOCIATES
DESIGN ● CONSULTING ● PROJECT MGT
11590 W BERNARDO COURT, SUITE 100
SAN DIEGO, CA 92127
WWW.RSTAVARES.COM

PROFESSIONAL STAMP

REGISTERED PROFESSIONAL ENGINEER
MANNY D. FERNANDEZ
S3385
Exp. 03/31/24
STRUCTURAL
STATE OF CALIFORNIA

02/16/24

THE PLANS, IDEAS & DESIGNS SHOWN ON THESE DRAWINGS ARE THE PROPERTY OF R&S TAVARES ASSOCIATES, INC. DEVISED SOLELY FOR THIS CONTRACT. THESE PLANS SHALL NOT BE USED, IN WHOLE OR IN PART, FOR ANY PURPOSE FOR WHICH THEY WERE NOT INTENDED WITHOUT THE EXPRESS WRITTEN CONSENT OF R&S TAVARES ASSOCIATES, INC. ©

CLIENT

Class Leasing
1320 W. Oleander Ave. Perris CA 92571-7408
VOICE (951) 943-1908 FAX Fax (951) 943-5768

ORIGINAL PC STATE AGENCY APPROVAL

APPROVED
DIV. OF THE STATE ARCHITECT
APP: 04-123059 PC
REVIEWED FOR
SS ☑ FLS ☑ ACS ☑ CG ☑
DATE: 02/20/2024

Revision Schedule

#	Description	Date22079

PRE-CHECK (PC) DOCUMENT

Code: 2022 CBC

A separate project application for construction is required

PROJECT TITLE
RAMPS PC
CLASS LEASING
PC#04-121419

SHEET TITLE
Stair Conn

PROJECT NUMBER
22079

DRAWN BY
rMc

CHECKED BY
BR

DATE
12/23/2022

SHEET NO.
SR7

SHEET OF

M:\2020\20093 - Class Leasing, 24x40 - 120x40 2022 CBC Updates\REVITRST#20093 - Aries, Ramps and Stairs PC.rvt

6/15/2021 7:29:30 PM