San Angelo Independent School District

26-005
Carver Abatement & Demo

The San Angelo Independent School District is accepting sealed proposals for the **Abatement & Demolition of Carver (Building A) A MANDATORY PRE BID WALK on 3/13/26 will begin at 11:00 AM at Carver, 301 W 9th.**

Proposals will be received in the Purchasing Department, 1621 University, San Angelo, TX 76904 until **3PM, Wednesday, March 25, 2026.** Proposal envelopes shall be plainly marked on the lower left-hand corner with **your company name** and the following information:

Sealed RFP #26-005	**For: Carver Abatement & Demo**
Your Company Name:	**Do Not Open Until: 3/25/26 – 3:00 PM**

The bid packet may be found at http://www.saisd.org/bids OR may be obtained from the SAISD Purchasing Department, 1621 University, San Angelo, Texas, 325.947.3759.

This project will require a Bid Bond, Payment Bond, & Performance Bonds.

Any deviation from our General Terms and Conditions for Bidding and the Special Terms and Conditions must be noted on the Deviation/Compliance Signature form provided.

Proposals will be publicly opened immediately following the specified deadline. Any proposal received later than the specified time, whether delivered in person or mailed, will be disqualified. **FAXED & EMAILED PROPOSALS WILL NOT BE ACCEPTED.**

After evaluation of all proposals is completed, the Purchasing Department will present a recommendation to the SAISD Board of Trustees at a scheduled meeting. After approval by the Board of Trustees, the bid tab will be posted on the SAISD website at http://www.saisd.org/bids.

Disclosure Statement:
HB 914 requires vendors to submit a conflict-of-interest questionnaire for gifts given to public officers. HB 914 and this questionnaire may be found on the San Angelo ISD website at www.saisd.org/ HB914. Each vendor desiring to do business with San Angelo ISD is required to familiarize themselves with this law and comply with all requirements. Failure to follow these requirements may result in being removed from the approved vendor list for San Angelo ISD.

The San Angelo Independent School District reserves the right to reject any or all proposals and to accept any proposal deemed most advantageous to the District.

If additional information should be required, contact the undersigned at 325.947.3759.

Respectfully,
Jason Henry
Director of Purchasing
Jason.Henry@saisd.org

Purchasing Department
1621 UNIVERSITY
SAN ANGELO, TX 76904
325.947.3759
FAX: 325.947.3837

San Angelo Independent School District
Carver Abatement & Demo
Request for Proposal #26-005

TABLE OF CONTENTS

- Special Terms and Conditions 70 pages
- SAISD Request for Proposal Form **(must return)** 1 page
- BID FORM **(must return)** 3 pages
- SAISD Standard Forms 25 pages
    1. General Conditions for Bidding
    2. Standard Terms and Conditions
    3. Non-Collusion Statement Form **(must return)**
    4. Felony Conviction Notification Form **(must return)**
    5. Bidders Certification Form **(must return)**
    6. Debarment and Suspension Certification Form **(must return)**
    7. Deviation/Compliance Form (**must return**)
    8. No Bid Notification Form (**return if applicable**)
    9. Certification Packet-6 pages (**must return**)
    10. Forms Checklist
    11. W-9 Form **(must return page 1)**

The following criteria will be used to award the bid based on the best value for the District. The **%** for scoring is listed beside the criteria requirement.

1. Purchase price **(50%)**
2. Reputation of the vendor **(5%)**
3. Quality of vendor's goods or services **(5%)**
4. Extent to which the goods or services meet the district's needs **(20%)**
5. Vendor's past relationship with district **(10%)**
6. HUB requirements
7. Total long-term cost to the district to acquire the goods
8. Vendor's ultimate parent company or majority owner has its principal place of business in the State of Texas or employees at least 500 persons in this state (not applicable to contracts related to telecommunications and information services, building construction and maintenance, or instructional materials)
9. Any other relevant factor listed in the request for proposal **(10%)**

San Angelo Independent School District
Purchasing Department

Please duplicate the below label and affix to the outside of your sealed proposal envelope.

Sealed Bid

San Angelo Independent School District
Purchasing Department
1621 University Ave.
San Angelo, TX 76904
Attn: Jason A. Henry, Director of Purchasing

Bid: 26-005
Carver Abatement & Demo
Company Name_____
Bid Deadline: 3/25/26 – 3:00 PM

Sealed Bid

Vendor's name and return address should be printed on the sealed proposal envelope.

San Angelo ISD has added a new feature to our bid opportunities webpage. You can sign up to receive an email alert whenever we post new bid opportunities to the webpage. Note: this is for all bid opportunities.

If you're interested in signing up, go to https://www.saisd.org/bids

Click on the orange bell icon on the webpage

Click on the word "Purchasing" in the box that pops up.
Click Next
Fill in your name & email address.
Click "signup"

San Angelo Independent School District

Special Terms and Conditions
Carver Abatement & Demo
RFP # 26-005

The San Angelo Independent School District is accepting sealed proposals for the Abatement & Demolition of Carver (Building A) A MANDATORY PRE BID WALK on 3/13/26 will begin at 11:00 AM at Carver, 301 W 9th.

This project will require a Bid Bond, Payment Bond, & Performance Bonds.

All Demolition and Abatement documents have been prepared by King Consultants and are contained within these Special Terms and Conditions.

For more information, or to schedule an additional sight visit contact Jason A. Henry at (325) 947-3759.

If this project is approved by the Board of Trustees, the district is expecting the work to begin no later than May 4, 2026.

Proof of insurance will be required for general liability, automobile liability, and worker's comp. Please check the limits in the general conditions for bidding line 33.

All contractors/sub-contractors/employees of a contractor who work on District property where students are present must present a clear criminal history report to the District prior to the start of the project.

The Board of Trustees, for the purpose of complying with Section 2288, Subchapter B of the Texas Government Code for all public contracts, has adopted the prevailing wage rates as determined by the US Department of **Labor in accordance with the Davis —Bacon Act as the published rates for the District. It** is the responsibility of the contractor to pay the appropriate rate or higher on the construction project or be subject to penalty as set forth in section 2258.023 of the Texas General Government Code.
This project **will be subject to bonding requirements. See general conditions line 33.**

All proposals **MUST** be submitted on the proposal form provided.

Proposal documents **MUST be signed by the company's authorized representative in the space(s) provided. Failure to manually sign the proposal documents may result in disqualification of the proposal.**

The District reserves the right to waive formalities and/or irregularities and to accept or reject any/each item separately or as a whole.

Purchasing Department
1621 University
San Angelo, TX 76904
325.947.3759
Fax: 325.947.3837

King Consultants
Environmental
1205 E. 46th Street
Lubbock, Texas 79404
(806) 763-6157
1-800-658-6018

SPECIFICATIONS
FOR
ASBESTOS ABATEMENT

AT

SAN ANGELO INDEPENDENT SCHOOL DISTRICT
CARVER LEARNING CENTER
301 WEST 9TH STREET
SAN ANGELO, TEXAS 76903

FOR

SAN ANGELO INDEPENDENT SCHOOL DISTRICT
1621 UNIVERSITY AVENUE
SAN ANGELO, TEXAS 76904

FEBRUARY 2026

KC PROJECT # 26-01-11

King Consultants
Environmental

1205 E. 46th Street
Lubbock, Texas 79404
(806) 763-6157
1-800-658-6018

Project Name:
San Angelo Independent School District
Carver Learning Center
301 West 9th Street
San Angelo, Texas 79603

February 27, 2026

Asbestos Abatement – Base Bid – Remove and properly dispose of joint compound/texture on sheetrock walls and fur down, plaster on walls, joint compound/texture on sheetrock ceilings, hard pipe fittings, vinyl linoleum with mastic, black mastic on wooden floors, felt paper with black mastic on floors, black mastic glue dots on plaster walls, transite chalkboards, window assemblies, & sink undercoating, as marked on the site maps.

The following project managers for King Consultants, Inc. have the authority to conduct the responsibilities and functions, including final clearance inspections as stated in the specifications of this project and any other project to which they are assigned.

Name	PM #	AMT #
Laurent Dinka	50-1407	70-6539
Dixie Rumsey	Consultant	10-5885
Benjamin Rumsey	50-1764	70-6912
Luis Baca	50-1037	70-5804
Austin Williams	50-1972	70-7130
Stacy Jennings	50-1308	70-6450
Samuel Valerio	50-1729	70-6876
Marcus Preston	50-1470	70-6568
Curtis Childers	50-1873	70-7035
Jeremy Probasco	50-1937	70-7103
Araceli Rodriquez	50-1916	70-7081
Michael Monte	50-1282	70-2804
Kendon Draper	50-1964	70-7135

Henry King, Consultant
TDSHS #10-5135
Expiration Date Feb. 7, 2027

Jace Hassoldt, Consultant
TDSHS #10-5759
Expiration Date Feb. 12, 2027

Dixie Rumsey, Consultant
TDSHS #10-5885
Expiration Date Sept. 29, 2027

King Consultants, Inc.

Bedford	Lubbock	San Angelo
805 Forest Ridge, Suite 107	1205 East 46th Street	324 West 26th Street
Bedford, Texas 76022	Lubbock, Texas 79404	San Angelo, Texas 76901
817-354-9890	806-763-6157	325-944-0931

CERTIFICATE OF PRE-START SUBMITTALS

Project Name _____ Date _____

Project Address _____ Project No. _____

Activity/Type & Quantity of ACBM Removed _____

_____

Area Where Work will be conducted _____

Contractor's Name _____

Requirements for Work to Proceed:

Contractor's TDSHS License	Number:		Expiration Date:	
Contractor's Certificate of Insurance	Yes	☐	No	☐
Waste Transporter's TDSHS Lic.	Number			
Waste Transporter's Cert. of Insur.	Yes	☐	No	☐
MSDS Sheets for Supplies	Yes	☐	No	☐
Respirator Program	Yes	☐	No	☐
Safety Program	Yes	☐	No	☐
Hazardous Communications Prgm	Yes	☐	No	☐
Job Specifications and All Revisions	Yes	☐	No	☐
TDSHS Notification	Yes	☐	No	☐
Abatement Workers Certifications	Yes	☐	No	☐

Project Manager _____

Printed Name _____

ASBESTOS ABATEMENT

SAN ANGELO INDEPENDENT SCHOOL DISTRICT
1621 UNIVERSITY AVENUE
SAN ANGELO, TEXAS 76904

Consultant
Dixie Rumsey
King Consultants, Inc.
2032 E. Highway 80
Abilene, Texas 79601
(325) 669-8119

DIXIE RUMSEY ASBESTOS CONSULTANTS • 10-5885 • TEXAS

Dixie Rumsey, Consultant

TABLE OF CONTENTS

TITLE	Page #
Invitation to Bid	1-7
General Terms and Conditions	1-5
Specifications	1-38
Drawings (Appendix A)	1-5
Submittal Forms (Appendix B)	1-2

Invitation To Bid For:

SAN ANGELO INDEPENDENT SCHOOL DISTRICT
CARVER LEARNING CENTER
301 WEST 9TH STREET
SAN ANGELO, TEXAS 76903

Bids for asbestos abatement will be received by the San Angelo Independent School District, 1621 University Avenue; San Angelo, Texas 76904. Bids will be received until **TBD.**

Bids must be clearly marked **ASBESTOS ABATEMENT – SAN ANGELO ISD – CARVER LEARNING CENTER**

Any bids not received on time will be returned unopened.

Bidder Requirements: The successful bidder shall furnish all necessary labor, supervision, tools, supplies, job insurance and required equipment to perform the work in a workman like manner. All work performed is subject to the provisions of Part 40 CFR, 763, Texas Department of Health, all local codes and regulations and these specifications.

Bidder shall demonstrate prior experience on asbestos abatement projects of similar nature and scope through letters of reference from a minimum of 5 previous users of bidder's service. (Section 1.2.1.1 of specifications manual)

Please see attached sheet marked "Instruction to Bidders" for additional requirements.

INSTRUCTION TO BIDDERS:

The following items must be included with your bid:

A. A statement that states that the Contractor has been in business at least two (2) years.

B. A list of any work not completed within the time frame as specified, and list of any projects that had liquidated damages.

C. Any project involving litigation or project that resulted in any unresolved problems with the owner or project manager.

D. A list of five (5) completed projects and phone numbers of persons to contact. This list must include at least two (2) projects that involved ceiling scrapes. Also, the list must include at least two (2) projects of the same or greater size.

E. Certified statement naming the principal owners and their ownership in any other asbestos related companies.
Notarized statement per Sections 1.2.1.3 - 1.2.1.4, 1.2.1.5 - 1.2.1.6, 1.2.1.7 - 1.2.1.8.

A. You must submit a list of any violations received from the Texas Department of State Health Services.

FAILURE TO FURNISH THIS WITH YOUR BID COULD RESULT IN YOUR BID BEING DISQUALIFIED.

Attendance of the walk through is mandatory by those submitting a proposal on the project. The walk through will be held at **TBD,** with participants meeting at the Carver Learning Center located at 301 West 9th Street in San Angelo, Texas. The enclosed form MUST be used in submitting your proposal.

SPECIAL NOTICE: The Consultant and the owner, San Angelo ISD, are charged with the responsibility of creating a healthy and competitive atmosphere among a large number of vendors; however, vendors may be removed from the various bid lists due to:

1. Lack of response to bid invitations.
2. Non-competitive bidding (on or receiving a very small part of bids).
3. Failure to adhere to terms and conditions of bids.
4. Substituting (without approval) items other than those actually bid.
5. Failure to render service normally associated with the sale of goods; i.e. delivery dates, shipment problems, return and replacement of damaged goods, provided (within reason) availability of contact person associated with the bid.

Questions regarding specifics of this bid should be addressed to Ms. Dixie Rumsey, King Consultants, 2032 East Highway 80; Abilene, Texas 79601, Phone # (325) 669-8119. Plans are available from King Consultants at the address above.

Thank you for your interest in this project.

SAN ANGELO INDEPENDENT SCHOOL DISTRICT

Items below apply to and become part of terms and conditions of construction related to bids. Any exceptions must be in writing.

Bids shall be submitted on the form provided. Each bid shall be placed in a separate envelope, sealed, and identified with the bid title placed on the left bottom corner.

Bids must be received by the Owner BEFORE the hour specified on the opening date. Bids received LATE will be returned to the bidder.

Prices must remain firm for a period of 90 days from the bid opening date to allow the Owner time to accept or reject the bids as recommended by the Consultant. Unit price on quantity specified must be bid, extended and total shown. In case of error in extension, unit price will govern.

Bids cannot be altered or amended after opening time. Any alterations made before opening time must be initialed by bidder or his authorized agent. No bid can be withdrawn after opening time.

DELIVERY and RECEIPT of items related to the construction or installation of the item(s) in the bid is strictly the responsibility of the vendor. Owner personnel are not authorized to accept delivery on behalf of the vendor.

Bids must show the full name and address of the bidder if different than the name and address shown on the bid request. Failure to manually sign bid may disqualify it.

The Owner reserves the right to accept or reject any or all bids, and to waive any or all formalities, or to accept any part of this bid deemed to be most advantageous to the owner.

This bid is submitted subject to the existing written policies of San Angelo ISD which will become part of this contract.

INSPECTION OF WORK: Work shall be inspected and approved by San Angelo ISD or a designated representative.

BID SECURITY: Each bidder shall include an acceptable bidder's bond, payable to San Angelo ISD in the amount not less than five (5%) of the largest possible total bid award he might receive as a result of this bid submission.

Both the bid bond and the payment and performance bond shall be written by a Surety Company listed by the United States Department of the Treasury (Federal Register Circular 570) as an acceptable surety on Federal Bonds and shall hold a B+ or better rating by A.M. Best Company, Oldwick, N.J. The right to accept a bid from a company with an acceptable bond that is not Treasury listed shall be reserved by the owner.

PAYMENT AND PERFORMANCE BOND: The successful bidder shall be required to execute at his expense for the benefit of the owner, if the bid award is $25,000 or more, a Statutory Performance Bond and Statutory Payment Bond as required by the Statutes of the State of Texas. Said bond must be written by a company licensed to do business in the state of Texas and must meet the above qualifications.

INSURANCE: Copies of approved Worker's Compensation Insurance, automobile insurance and Occurrence Liability Insurance with minimum limits as set forth in section 1.1.3.2.1, 1.1.3.3, and 1.1.3.4 shall be placed on file with the representative for San Angelo ISD by the successful bidder. All insurance shall be carried with insurance companies licensed to operate in the State of Texas, and the policies shall be written by Agents who are bona fide residents of the State of Texas.

LIQUIDATED DAMAGES: The owner shall have the right to deduct and retain from the amount agreed to be paid to the successful bidder the sum of Six Hundred and Fifty dollars ($650.00), for each and every day that such work is delayed beyond the date mutually agreed upon as completion date by the bidder and owner at the time of the signing of the contract for his work. These liquidated damages pertain to each phase of the project.

PAYMENT FOR WORK: Payment for work will be made upon completion of the work and the inspection and approval of the work by the Consultant and Coordinator of the project for San Angelo ISD. One payment shall be made at the completion of the work based on the Consultant/Coordinators approval or as outlined in the General Conditions. Partial payments will be considered, subject to the approval of San Angelo ISD, as outlined in the General Conditions.

VISITATION: Bidders shall visit the project site and compare drawings and specifications with actual site and conditions which will in any way affect the project. Failure to do so, or oversight while there, will in no way relieve the successful bidder of responsibility for completing the project in accordance with drawings and specifications without additional cost to the owner.

General Terms and Conditions
For Specifications and Contract

1. Governing Laws and Guidelines

- This contract and specifications shall be governed by Asbestos regulations as governed by the Texas Department of State Health Services, (TDSHS) the EPA and OSHA.
- All parts of the specifications shall be applicable if they are at least as stringent or more so than the above State and Federal laws.
- The contract for the work covered by the specifications shall not be assigned to others without the written consent of the owner or owner's representative.
- A written notice to the specifications or contract shall be binding when delivered to the contact either in person, by mail or electronic mail.

2. Testing and Inspections

- All required testing or inspections shall be conducted by the owner's representative, in this case the Consultant, or his on-site representative and shall be coordinated with this representative with the exception of the contractor required OSHA personal sampling. This shall be paid for by the contractor.
- All cost associated with the testing and inspection shall be paid for by the owner unless additional testing is required due to failure of the contractor to pass the first set of samples conducted by the Consultant's representative. The contractor shall be responsible for personal sampling as required by OSHA.

3. Proposal/Bid Security Bid Bond

- A bid bond or cashier's check must accompany each sealed proposal/bid payable to the owner in the amount of no less than (5%) or the largest possible total for the proposal/bid submitted. Money orders or cash are not acceptable security.
- The proposal/bid bonds received shall be returned by the owner within ten days for all proposals/bids not accepted by the owner.
- The proposer/bidder whose proposal/bid is accepted by the owner, but the proposer/bidder does not execute a contract within ten days from the date of offer of a contract, the owner may declare his/her Proposal/Bid Security or Bid Bond forfeited to the Owner.

4. Qualification Documentation Required

- All requirements for qualifications as required by the specifications must accompany the proposal/bid. Failure to do so will result in the proposal/bid not being accepted at the discretion of the owner.

5. License, Permits, Taxes and Fees

- All permit requirements by this contract shall be paid for by the contractor.
- All taxes due to any government entity on this contract shall be paid by the contractor
- As specified in the specifications, the owner shall be responsible for the ARU fee charged by TDSHS.

6. Withdrawal or Modification or Submitted Proposal/Bid

- Any proposal/bid submitted may be withdrawn prior to the scheduled time for opening of proposals/ bids. This withdrawal must be in writing and submitted to the owner prior to the scheduled time of opening.
- No changes or amendments to the proposal/bid or other changes shall be accepted after the scheduled time for opening. If a change is desired, the submitted proposal/bid must be withdrawn and a new proposal/bid submitted prior to the scheduled opening time.
- No proposer/bidder may have more than one proposal/bid submitted on the same project.
- After the scheduled time for opening the proposal/bid, it may not be withdrawn for 90 days.

7. Erasures or Corrections to the Proposal/Bid

- If there are any erasures of corrections made to the proposal/bid, said erasures or corrections shall be signed by the proposer/bidder prior to the submittal of the proposal/bid.

8. Proposal/Bid Cost

- The owner shall not be responsible for any cost incurred by the proposer/bidder in the preparation of the proposal/bid.
- By submitting a proposal/bid, the owner is not obligated to enter into a contract for any services or equipment.

9. Award of Contract

- The owner reserves the right to accept or reject any and all proposals/bids and to waive any irregularities or informalities in any proposal/bid or in the proposal/bid process. The contract will be awarded to the responsible proposer/bidder whose proposal/bid proves to be the most advantageous to the owner, considering the relative importance of price and other evaluation criteria which is part of these specifications.
- The owner reserves the right to not accept a proposal/bid solely on the basis of low price; quality and suitability to purpose will be the controlling factors and the owner reserves the right to arrive at such by means it deems appropriate. The proposal/bid shall be based on the criteria that is part of these specifications.
- If the owner finds that the awarded contractor has in any way offered and accepted any form of gratuities, such as entertainment, gifts or otherwise made an offer to any person to whom has a bearing as to the award of the contract, then the owner will, with written notice, cancel the contract
- By acceptance and signing of the contract, the contractor agrees to abide by the Fair Labor Standard Act, Equal Opportunity Employment Act, and all other applicable Federal, State, and Local Laws, regulations, and executive orders to the extent that the same may be applicable.
- The owner reserves the right to accept and to award on a "line item" basis or "all or none" basis, whichever is the most advantageous to the owner. The owner reserves the right to award contracts or portions thereof exclusively or to multiple or proposers/bidders to achieve the best value to the owner.

10. Clarification and Addendums

- Any questions that are applicable to the specifications, plans or any addendums issued shall be submitted in writing to the owner or Consultant. Any questions written shall be answered in writing to all contractors who were present and signed in at the scheduled pre-proposal/bid walk through. These written responses shall be binding and will become part of the plans, specifications, and contract for the project.
- All written answers shall be sent by mail and/or by E-mail by use of the information furnished on the pre-proposal/bid walk through. The owner is not responsible for the accuracy of this information.
- All addendums issued shall be acknowledged on the proposal/bid form.

11. Proposal Disclosure

- In the event that the proposer/bidder desires to claim a portion of his/her proposal/bid are exempt from disclosure, it is incumbent upon the proposer/bidder to identify those portions in a transmittal letter. The transmittal letter must identify the pages, the particular exemption(s) from disclosure and the contended justifications for exemption upon which it is making its claim. The owner will consider a proposer's/bidder's request (s) for exemption from disclosure; however, the owner will not be bound by the assertion that a page contains exempt material. An assertion by proposer/bidder that the entire volume of the proposal/bid is exempt from disclosure will not be honored.
- No disclosure of any material that is contained in the proposal/bid shall be made in any form by either the proposer/bidder or the owner or owner's representative except as provided by law, including the Texas Public Information Act, Texas Government Code Chapter 552.
- A proposer/bidder shall not reveal any information to a news agency or other entity concerning the proposal/bid or the fact that there may be pending action to issue a contract unless he/she has written permission from the owner and only then in joint cooperation with the owner.
- Any proposal/bid submitted and signed shall include information of any conflict of interest that may exist between himself/herself and any personnel that are part of the owner personnel or the Consultant's personnel.
- Any proposal/bid submitted and signed shall affirm that the price submitted was not arrived at by the receipt of any unfair advantage or information that is not otherwise public knowledge.

12. Forfeiture for Failure to Execute Contract

- In the event that a proposer/bidder fails to/or refuses to execute within ten (10) calendar days of the date of the issuance of the notice to proceed the owner reserves the right to award the contract to the next contractor that was rated as being the next best value to the owner. The owner may at his/her discretion call for a new proposal/bid to be submitted on the project.

13. Applicable Specifications

- The specifications, plans and any other documents associated with this project are the property of the owner and Consultant and they are not to be shared with any personnel, company or other individual that were not present at and signed in at the pre-proposal/bid walk through.
- The proposer/bidder shall submit their proposal/bid on the form found in the specifications or amended form found in an addendum.
- All quantities appearing in the specifications, plans or any issued addendum are approximate only and the owner and the Consultant are not responsible for the accuracy of these quantities.

14. On-Site Supervision of Project

- The contractor shall provide a qualified, certified and Texas licensed project supervisor that must be present at any time that there is work being performed.
- This supervisor shall have the necessary experience to perform the task required for this contract and shall make corrections as directed by the Consultant's Project Manager.
- This supervisor shall not be replaced without first providing for this replacement in writing to the Consultant's Project Manager and by providing the name and qualifications of the replacement supervisor. This replacement supervisor must be approved by the Consultant.

15. Safety of Persons and Property

- The contractor shall take all necessary precautions for safety of, and shall provide reasonable protection to prevent damage, injury or loss to: 1- employees on the project and to other persons who may be affected thereby; 2-The Work and materials and equipment to be incorporated therein, whether in storage on or off site, under care, custody or control of the Contractor or the Contractor's Subcontractors or Sub-contractors; 3-other property at the site or adjacent thereto, such as trees, shrubs, lawns, walks, pavements, roadways, structures, and utilities not designated for removal, relocation or replacement in the course of the contract.
- The contractor shall have a written safety program on site and shall show that all employees have been trained in the execution of this safety program.

End of Document

TABLE OF CONTENTS

Part 1 General Information
1.1 Bid Requirements
1.1.1 Site Investigation
1.1.2 Discrepancies
1.1.3 Insurance Requirements and Bid Security
1.2 Licenses and Qualifications
1.3 Definitions
1.4 Scope of Work
1.5 Description of Work
1.6 Applicable Standards and Guidelines
1.7 Submittals and Notices
1.8 Site Security
1.9 Emergency Planning
1.10 Pre-start Meeting

Part 2 Materials and Equipment
2.1 Materials
2.2 Equipment
2.3 Substitutions

Part 3 Execution
3.1 Preparation
3.1.1 Work Area Pre-cleaning
3.1.2 Worker Decontamination Enclosure
3.1.3 Waste Container pass-out Airlock
3.1.4 Barriers Between the Work Area and Occupied Areas
3.1.5 Maintenance of Enclosures
3.1.6 Establishing Emergency Exits
3.1.7 Removing and Cleaning Fixtures from Area
3.1.8 Removal of Building Structural Components
3.1.9 Commencement of Work
3.1.10 Enclosure System Approval
3 1.11 Alternative Procedures
3.2 Workplace Entry and Exit Procedures
3.3 Training
3.4 Respiratory Protection
3.5 Protective Clothing
3.6 Removal Procedures
3.7 Clean-up
3.8 Lock-down
3.9 Final Inspection and Clearance Air Monitoring
3.10 Disposal Procedures
3.11 Transportation to the Landfill
3.12 Disposal at Landfill
3.13 Re-establishment of the Work Area and Systems
3.14 Repairs

Part 4 Support Activities
4.1 Training
4.2 Medical Monitoring
4.3 Safety

PART 1 GENERAL INFORMATION

1.1 Bid Requirement

1.1.1 Site Investigation

1.1.1.1 By Submitting a Bid, the contractor acknowledges that he has investigated and satisfied himself as to (A) the conditions affecting the work, including but not limited to physical conditions of the site which may bear upon site access, handling and storage of tools and material, access to water, electric and other utilities or otherwise affect performance of required activities:(B) The character and quantity of all surface and subsurface materials or obstacles to be encountered insofar as this information is reasonably ascertainable from an inspection of the site, including exploratory work done by the Building Owner or a designated consultant, as well as information presented in drawing and specifications included with this contract. Any failure by the Contractor to acquaint himself with available information will not relieve him from the responsibility for estimating properly the difficulty or cost of successfully performing the work. The Building Owner is not responsible for any conclusions or interpretations made by the Contractor on the basis of the information made available by the Building Owner: (C) Has completely read these specifications and agrees to all parts of it. Agrees that upon entering into either a written or verbal agreement and does start work on the project as outlined in these specifications that the contractor agrees to all terms and stipulations as outlined in these specifications.

1.1.1.2 No Bids will be accepted from any Contractor who has not inspected the job site either in person or through a qualified designated representative. The walk through is mandatory.

1.1.1.3 Failure to meet any of the conditions of these specifications will result in the forfeit of the Bid Security.

1.1.1.4 Hold harmless and indemnity agreement. By entering into either a verbal or written agreement the contractor agrees to hold harmless and to indemnity the Consultant and owner from any legal action resulting from any action caused by either the contractor or any employee or sub-contractor. This includes but is not limited to any legal action resulting from an OSHA violation, TDSHS rules violation, or any other violation or injury to any employee other than employees of the Consultant.

1.1.2 Discrepancies

1.1.2.1 Should a Person submitting a Bid find discrepancies in the plans and/or specifications or should he be in doubt as to the meaning or intent of any part thereof, he must, prior to commencement of work, request clarification from the Consultant or Building Owner. Discrepancies with regard to conflicts between the Contract Documents and applicable Federal, State or Local regulations or requirements shall be included therein. Failure to request such clarification is a waiver to any claim by the Person submitting a Bid for expense made necessary by reason of later interpretation of the Contract Documents by the Building Owner.

1.1.2.2 Copy of the plans will be at the back of these specifications, when available.

1.1.2.3 Oral explanations or instructions will not be binding; only written addenda are binding.

1.1.3 Insurance Requirements and Bid Security

1.1.3.1 Insurance requirements-The Contractor shall purchase and maintain insurance that will protect him from claims that may arise out of or result from his activities under this Contract, whether those activities are performed by himself or by any Subcontractor or by anyone directly or indirectly employed by any of them or by anyone for whose acts any of them may be liable. The contractor agrees to name King Consultants or any of its subsidiaries or sister companies as additional insured. Failure to do this does not relieve the contract of all liability resulting from any legal action.

1.1.3.2 Required Workers Compensation Insurance Coverage - 28 TAC 110.110(c)(7), adopted to implement Texas Labor Code 406.096
The owner shall use the following language for Bid specifications and contracts for building or construction, without any additional works or changes, except those required to accommodate the specific document in which they are contained or to impose stricter standards of documentation.

A copy of a certificate of insurance, a certificate of authority to self-insure issued by the commission, or a coverage agreement (TWCC-81, TWCC-82, TWCC-83, or TWCC-84), showing statutory workers' compensation insurance coverage for the person's or entity's employees providing services on a project is required for the duration of the project.

Duration of the project includes the time from the beginning of the work on the project until the contractor's/person's work on the project has been completed and accepted by the governmental entity.

Persons providing services on the project ("subcontractor" in Texas Labor Code 406.096) include all persons or entities performing all or part of the services the contractor has undertaken to perform on the project, regardless of whether that person contracted directly with the contractor and regardless of whether that person has employees. This includes, without limitation, independent contractors, subcontractors, leasing companies, motor carriers, owner-operators, employees or any such entity, or employees or any entity that furnishes persons to provide services on the project.

Services include, without limitation, providing, hauling, or delivering equipment or materials, or providing labor, transportation, or other service related to a project. Services do not include activities unrelated to the project, such as food/beverage vendors, office supply deliveries, and delivery of portable toilets.

1.1.3.3 The contractor must provide a certificate of coverage to the owner prior to being awarded the contract. The contractor agrees to name King Consultants or any of its subsidiaries or sister companies as additional insured. Failure to do this does not relieve the contract of all liability resulting from any legal action.

If the coverage period shown on the contractor's current certificate of coverage ends during the duration of the project, the contractor must, prior to the end of the coverage period, file a new certificate of coverage with the building owner showing that coverage has been extended.

The contractor shall obtain from each person providing services on a project, and provide to the governmental entity:

A certificate of coverage, prior to that person beginning work on the project, so the building owner will have on file certificates of coverage showing coverage for all persons providing services on the project; and

No later than seven days after receipt by the contractor, a new certificate of coverage showing extension of coverage if the coverage period shown on the current certificate ends during the duration of the project.

The contractor shall retain all required certificates of coverage for the duration of the project and for one year thereafter.

The contractor shall notify the building owner in writing by certified mail or personal delivery, within ten days after the contractor knows or should have known, of any change that materially affects the provision of coverage of any person providing services on the project.

The contractor shall post on each project site a notice, in the text, form, and manner prescribed by the Texas Workers' Compensation Commission, informing all persons providing services on the project that they are required to be covered, and stating how a person may verify coverage and report lack of coverage.

The contractor shall contractually require each person with whom it contracts to provide services on a project, to:

1. Provide coverage, based on proper reporting of classification codes and payroll amounts and filing of any coverage agreements, which meets the statutory requirements of Texas Labor Code 401,011(44) for all of its employee's providing services on the project for the duration of the project.

2. Provide the contractor, prior to that person beginning work on the project, a certificate of coverage showing that coverage is being provided for all employees of the person providing services on the project for the duration of the project.

3. Provide the contractor, prior to the end of the coverage period, with a new certificate of coverage showing extension of coverage, if the coverage period shown on the current certificate of coverage ends during the duration of the project.

4. Obtain from each person with whom it contracts, and provide to the contractor:

   a. A certificate of coverage, prior to the other person beginning work on the project; and
   b. A new certificate of coverage showing extension of coverage, prior to the end of the coverage period, if the coverage period shown on the current certificate of coverage ends during the duration of the project.

5. Retain all required certificates of coverage on file for the duration of the project and for one year thereafter.

6. Notify the building owner in writing by certified mail or personal delivery, within ten days after the person knew or should have known, of any change that materially affects the provision of coverage of any person providing services on the project; and
7. Contractually require each person with whom it contracts to perform as required by items 1-6, with the certificates of coverage to be provided to the person for whom they are providing services.

By signing this contract or providing or causing to be provided a certificate of coverage, the contractor is representing to the building owner that all employees of the contractor who will provide services on the project will be covered by workers' compensation coverage for the duration of the project, that the coverage will be based on proper reporting of classification codes and payroll amounts, and that all coverage agreements will be filed with the appropriate insurance carriers or, in the case of a self-insured, with the commission's Division of Self-Insurance Regulation. Providing false or misleading information may subject the contractor to administrative penalties, criminal penalties, civil penalties, or other civil actions.

The contractor's failure to comply with any of these provisions is a breach of the contract by the contractor that entitles the building owner to declare the contract void if the contractor does not remedy the breach within ten days after receipt of notice of breach from the building owner.

The coverage requirement recited above does not apply to sole proprietors, partners, and corporate officers who are excluded from coverage in an insurance policy or certificate of authority to self-insure that is delivered, issued for delivery, or renewed on or after January 1, 1996. 38 TAC 110.110(I)

1.1.3.4 The contractor shall submit a certificate of Asbestos Abatement general liability insurance for personal injury, occupational disease and sickness or death, premises-operations, products /completed operations hazard, contractual insurance, independent contractors, and broad form property damage. Insurance shall include "Occurrence" claim provisions.

Minimum Coverage Shall Be:

$1,000,000.00	Combined Single Limit for Bodily Injury and Property Damage
$ 500,000.00	Bodily Injury
$ 500,000.00	Property Damage (each occurrence)
$2,000,000.00	Aggregate limit

The property owner and the Consultant shall be named as additional insured.

In addition to the above general liability insurance the contractor will be required to furnish the following additional insurance:

1.1.3.3.1 Installation Floater(not applicable)

The contractor shall, during the progress of the work, maintain insurance equal to the full amount of the cost of the project plus three percent for additional costs. Policy shall be inland marine form, subject to the approval of the Owner. The insurance shall cover all work incorporated in the building project and all materials for the same, in or about the premises. Money received under any such insurance shall be paid in the same manner as monthly progress payments in relation to the cost incurred in the rebuilding or reparation of the work destroyed or damaged. Floaters Installation Insurance shall be subject to a deductible of $1,000.00 for all losses occasioned by perils insured. All other losses will be at the risk of the contractor(s).

Owner's Liability Insurance

The contractor shall obtain, at his expense, an Owner's Protection Liability Insurance Policy, naming the Owner, its employees, and the Consultant as insured, with the following limits:

$ 500,000.00	Each Occurrence
1,000,000.00	Aggregate

Certificates of Insurance for the above coverage shall be filed with the Owner before work is started.

1.1.3.3.2 Pollution Liability Insurance

The asbestos abatement contractor shall provide the Owner with an insurance certificate for Pollution Liability Insurance in the amount of $1 million dollars for the asbestos waste transportation company. Should the abatement contractor transport their own waste, they must provide this insurance.

1.1.3.4 The Contractor shall provide vehicle liability and property damage insurance for the duration of the project for all owned, hired, and non-owned vehicles with the following limits.

Bodily Injury	$ 300,000.00 (each person)
Bodily Injury	500,000.00 (each occurrence)
Property Damage	300,000.00 (each occurrence)

1.1.3.5 Should the person submitting a Bid to whom the contract is awarded fail or be unable to execute the contract for any reason within (30) days after notification of award, then an amount equal to the difference between the acceptable Bid price and that of the next highest person submitting a Bid shall be paid to the Building Owner as liquidated damages.

1.1.3.5.1 If required by the owner, the contractor will furnish a payment bond and performance bond in the amount of 100% of the contract price. This bond must be written by a Surety Company listed by the United States Department of the Treasury (Federal Register Circular 570) as an acceptable surety on Federal Bonds and shall hold a B+ or better rating by A.M. Best Company, Oldwick, N.J. The right to accept a Bid from a company with an acceptable bond that is not treasury listed shall be reserved by the owner.

1.1.3.6 As a prerequisite to signing the contract, the contractor shall have furnished Performance and Payment Bonds if required and Certificates of Insurance.

1.2 Licenses and Qualifications

1.2.1 Contractors must be licensed as required by the Texas Department of State Health Services for the purpose of removal, encapsulation, enclosure, demolition and maintenance of structures or components covered by or composed of asbestos-containing materials. In accordance with Texas Department of State Health Services regulations (295.31(e) each person on the job site must have the identification card issued by the TDSHS, proof of required training, current physical, and current respirator fit-test prior to work.

1.2.1.1 Contractor shall demonstrate prior experience on asbestos abatement projects of similar nature and scope through the submission of letters of reference from the Building Owner's including the name, address, and telephone number of contact person (someone specifically familiar with the Contractor's work) for at least three (5) previous users of service. Include descriptions of projects, locations, and records of all air monitoring data that were generated during the project.

1.2.1.2 In addition, Contractor shall furnish a copy of work procedure (e.g., containment, decon-unit, respirator, emergency plan, etc.).

1.2.1.3 Contractor shall submit a notarized statement, signed by an officer of the company, containing the following information.

1.2.1.4 A record of any citations issued by Federal, State or Local regulatory agencies relating to asbestos abatement activity. Include projects, dates, and resolutions.

1.2.1.5 A list of penalties incurred through non-compliance with asbestos abatement project specifications including liquidated damages, over-runs in scheduled time limitations and resolutions.

1.2.1.6 Situations in which an asbestos-related contract has terminated including projects, dates, and reasons for termination.

1.2.1.7 A listing of any asbestos-related legal proceedings/claims in which the Contractor (or employees scheduled to participate in this project) has participated or is currently involved. Include descriptions of role, issue, and resolution to date.

1.2.1.8 A certified statement listing all owners of said company and their ownership in any. other asbestos related companies or other professional entities.

1.2.1.9 All personnel working on this project shall be able to meet all requirements of the Federal Security. No person with a felony record conviction will be allowed to work on this project.

1.2.1.10 The primary contractor shall be the licensed asbestos abatement contractor and shall be one submitting the bid.

1.3 Definitions-

1.3.1 Abatement – Procedures to control fiber release from asbestos-containing materials. Includes removal, encapsulation, enclosure, repair, demolition, and renovation activities.

1.3.1.1 Abatement preparation– Preparation before asbestos abatement begins, which includes the following activities:

A. Removing any movable objects from the interior space of a public building once an asbestos abatement contractor takes control of that space for the purpose of asbestos abatement.
B. Pre-cleaning, wet wiping, HEPA vacuuming, and sealing a penetration or opening.
C. Installing plastic sheeting, such as a critical barrier, any part of a decontamination system, or any part of the water line connections to a shower, drain, or filtration.
D. Setting-up or using a load-out or bag-out system.
E. Selecting, installing, or maintaining a respiratory system or fiber reduction system (such as misting or spraying).
F. Posting warning signs.

G. Installing engineering controls, including local exhaust ventilation equipped with a HEPA filer dust collection system, construction of a containment or isolation mechanism to control processes producing asbestos dust, and ventilation of the regulated area to move contaminated air away from the breathing zone of person in containment and toward a filtration or collection device equipped with a HEPA filter;
H. Installing scaffolding in an area in which asbestos may be disturbed during the installation; and
I. Installing, setting-up, and calibration monitoring devices, including sampling systems and manometers.

1.3.1.2 ACGIN - American Conference of Governmental Industrial Hygienists, 6500 Glenway Avenue, Building D-5, Cincinnati, Ohio 45211.

1.3.1.3 Adequately wet – Sufficiently mixed or penetrated with liquid clean through with no dry material to prevent the release of particulates. If visible emissions are observed coming from asbestos-containing material, then that material has not been adequately wetted. However, the absence of visible emissions is not sufficient evidence of being adequately wet.

1.3.1.4 Aggressive air sampling – Collecting air samples after walls, ceilings, and floors are swept with the exhaust of an unaltered leaf blower that is operated per the manufacturer's instructions and is directed at all surfacing to cause loose asbestos fibers to become airborne.

1.3.1.5 AHERA – Asbestos Hazard Emergency Response Act of 1986, Public Law 99-519. The act amends the Federal Toxic Substances Control Act, 15 United States Codes, §2641, et seq., by requiring an inspection of all school buildings (Grades K-12), all school administrations to develop plans for controlling asbestos in or removing asbestos from school buildings and providing penalties for non-compliance.

1.3.1.6 AIHA - American Industrial Hygiene Association, 4676 Columbia Parkway (R-8) Cincinnati, Ohio 45226.

1.3.1.7 Airlock - A system for permitting ingress and egress with minimum air movement between a contaminated area and an uncontaminated area, typically consisting of two curtained doorways separated by distance of at least 3 feet such that one passes through one doorway into the airlock, allowing the doorway sheeting to overlap and close off the opening before proceeding through the second doorway, thereby preventing flow-through contamination.

1.3.1.8 Air monitoring - The process of measuring the fiber content of a known volume of air collected during a specific period of time. The procedure normally utilized for asbestos follows the NIOSH Standard Analytical Method for Asbestos in Air, Method 7400. For clearance air monitoring, electron microscopy methods may be utilized for lower detectability and specific fiber identification.

1.3.1.9 Air Sampling Professional - The professional contracted or employed by the Building Owner to supervise and/or conduct air monitoring. This individual may also function as the Asbestos Project Manager, if qualified. Supervision of air sampling and evaluation of results should be performed by an individual who has completed an EPA approved NIOSH 582 course and has specialized experience in air sampling for asbestos. Other acceptable Air Sampling Professionals include Environmental Engineers, Architects, Chemists, and Environmental Scientists or others with equivalent experience in asbestos air monitoring and asbestos abatement. This individual shall not be affiliated in any way other than through this contract with the Contractor performing the abatement work.

1.3.1.10 Amended Water - Water to which a surfactant has been added.

1.3.1.11 ANSI - American National Standards Institute, 1430 Broadway, New York, N.Y. 10018.

1.3.1.12 Asbestos - the asbestiform varieties of serpentine (chrysotile) riebeckite (crocidolite), cummingtonite-grunerite (amosite), anthophyllite, and actinolite, and tremolite. Includes any of these materials that have been chemically treated and/or altered.

1.3.1.13 Asbestos abatement – The removal, the encapsulation, or the enclosure of asbestos for the purpose of, that has the effect of, reducing or eliminating airborne concentrations of asbestos fibers or amounts of ACM.

1.3.1.14 Asbestos abatement contractor – A person who undertakes to perform asbestos removal, enclosure, or encapsulation for others under contract or other agreement, or who bids to undertake asbestos activities.

1.3.1.15 Asbestos abatement supervisor – An individual who is in the direct and responsible charge of the personnel, practices, and procedures of an asbestos abatement operation or project.

1.3.1.16 Asbestos consulting activities – consulting activities in public buildings include: the designing of asbestos abatement projects; the inspection for asbestos-containing materials (ACM); the evaluation and selection of appropriate asbestos abatement methods and project layout; the preparation of plans, specifications and contract documents; the review of environmental controls, abatement procedures for personal protection employed during the project; the design of area and clearance air monitoring of the project; any inspection, management planning, air monitoring, or project management performed by of for the consultant or consulting agency; consultation regarding compliance with various regulations and standards; recommending abatement options; and representing the consultant agency or consultant in obtaining consulting work.

1.3.1.17 Asbestos-containing building material (ACBM) – Surfacing ACM, thermal system insulation ACM, or miscellaneous ACM that is found in or on interior structural members or other parts of a public or commercial building.

1.3.1.18 Asbestos-containing Material (ACM) – Materials or products that contain more than 1.0% of any kind or combination of asbestos, as determined by the Environmental Protection Agency (EPA) recommended methods as listed in EPA/600/R-93/116, July 1993 "Method for the Determination of Asbestos in Bulk Building Materials". This means any one material component of a structure or any layer of a material sample. Composite sample analysis is not allowed. For purposes of complying with TAHPR provision relating to a public building, materials or products that contain 1.0% or more asbestos.

1.3.1.19 Asbestos-containing Waste Material - Includes mill tailings or any waste that contains commercial asbestos and is generated by a source subject to the provisions of 40 CFR Part 61, Subpart M. This term includes filters from control devices, friable asbestos waste material, and bags or other similar packaging contaminated with asbestos. As applied to demolition and renovation operations, this term also includes regulated asbestos-containing materials, and materials contaminated with asbestos including disposable equipment and clothing.

1.3.1.20 Asbestos debris – Pieces of ACBM that can be identified by color, texture, or composition, or means dust, if the dust is determined by an accredited inspector.

1.3.1.21 Asbestos exposure – Airborne asbestos fiber concentrations resulting from disturbance or deterioration of asbestos or asbestos containing material (ACM).

1.3.1.22 Asbestos project design – Asbestos abatement project design includes the inspection of public buildings for asbestos containing material (ACM), the evaluation and selection of appropriate asbestos abatement methods, project layout, the preparation of plans, specifications and contract documents, and the review of environmental controls, abatement procedures and personal protection equipment employed during the project.

1.3.1.23 Asbestos Project Manager - That person designated by the Consultant to manage all asbestos work.

1.3.1.24 Asbestos-related activity – The disturbance (whether intention or unintentional), removal, encapsulation, or enclosure of asbestos, including preparations or final clearance, the performance of asbestos surveys, the development of management plans and response actions, asbestos project design, the collection or analysis of asbestos samples, monitoring for airborne asbestos, proposing for a contract for any of these activities, or any other activity required to be licensed under the Texas Asbestos Health Protection Act.

1.3.1.25 Asbestos removal – Any action that dislodges, strips, or otherwise takes away asbestos containing material (ACM).

1.3.1.26 Asbestos reporting unit (ARU) – An asbestos reporting unit is 160 square feet or 260 linear feet or 35 cubic feet of ACBM in public buildings or RACM in facilities, as defined under NESHAP.

1.3.1.27 Asbestos survey – An inspection of a building or facility to determine the location, quantity, and condition of asbestos-containing material (ACM) therein by taking samples for analysis or by visual inspection.

1.3.1.28 ASTM - American Society for Testing and Materials, 1916 Race Street, Philadelphia, PA 19103.

1.3.1.29 Authorized Visitor - The Building Owner (and any designated representatives) and any representative of a regulatory or other agency having jurisdiction over the project.

1.3.1.30 Bag-out area -An area distinct from the decontamination area that is used to decontaminate asbestos waste bags before placing them into outer bags.

1.3.1.31 Building Owner - The Owner or his authorized representative.
1.3.1.32 Certified Industrial Hygienist - (CIH) An industrial hygienist certified in Comprehensive Practice by the American Board of Industrial Hygiene. (See Section 1.3.1.2 for address).
1.3.1.33 Clean Room - An uncontaminated area or room which is a part of the worker decontamination enclosure system with provisions for storage of worker's street clothes and clean protective equipment.
1.3.1.34 Commercial asbestos – Any material containing asbestos that is extracted from ore and has value because of its asbestos content (NESHAP definition, 1990).
1.3.1.35 Commercial Building – The interior of any industrial or federal government owned building. Interior space includes exterior hallways connecting buildings, porticos, and mechanical systems used to condition interior space.
1.3.1.36 Competent person – The individual designated as the competent person as required by the United States Occupational and Health Administration regulations in 29 CFR , §1926.32(f).
1.3.1.37 Containment – A portion of the regulated area that has been sealed and placed under negative air pressure with high efficiency particulate air-filter (HEPA) filtered negative air machines.
1.3.1.38 Contractor – A person under contract to perform a service with wage or income reporting and tax responsibilities.
1.3.1.39 Curtained Doorway - A device to allow ingress and egress from one room to another while permitting minimal air movement between the rooms, typically constructed by placing two overlapping sheets of plastic over an existing or temporarily framed doorway, securing each along the top of the doorway, securing the vertical edge of one sheet along one vertical side of the doorway and securing the vertical edge of the other sheet along the opposite vertical side of the doorway. Other effective designs are permissible if approved in advance by the Consultant.
1.3.1.40 Decontamination Enclosure System - A series of connected rooms, separated from the work area and from each other by air locks, for the decontamination of workers and equipment. The system shall be in accordance with TAHPR 295.60 (e).
1.3.1.41 Demolition - The wrecking or taking out of any load-supporting structural member of a facility together with any related handling operations.
1.3.1.42 Designated person – The individual designated under Asbestos Hazard Emergency Response Act (AHERA) to oversee all asbestos activities to include compliance with all laws, regulations, and rules.
1.3.1.43 Disturbance –Activities that disrupt the matrix of ACM, render ACM friable, or generate visible debris from ACM.
1.3.1.44 Employee - A person who is paid a salary, wage, or remuneration by an entity for services performed and has a relationship with the entity that would result in the entity being liable for that person's acts or judgements.
1.3.1.45 Encapsulant - A liquid material which can be applied to asbestos-containing material which controls the possible release of asbestos fibers from the material either by creating a membrane over the surface (Bridging encapsulant) or by penetrating into the material and binding its components together (Penetrating encapsulant).
1.3.1.46 Encapsulation - The application of an encapsulant to asbestos-containing materials to control the release of asbestos fibers into the air.
1.3.1.47 Enclosure - The construction of an airtight, impermeable, permanent barrier around asbestos-containing material to control the release of asbestos fibers into the air.
1.3.1.48 EPA - U.S. Environmental Protection Agency, 401 M. Street S.W., Washington, D. C. 20460.
1.3.1.49 Equipment Decontamination Enclosure System - That portion of a decontamination enclosure system designed for controlled transfer of material and equipment into or out of the work area, typically consisting of a washroom and holding area.
1.3.1.50 Equipment Room - A contaminated area or room which is part of the worker decontamination enclosure system with provisions for storage of contaminated clothing and equipment.
1.3.1.51 Facility - Any institutional, commercial, or industrial structure, installation, or building.
1.3.1.52 Facility component – Any pipe, duct, boiler, tank, reactor turbine, or furnace at or in a facility or any structural member of a facility.
1.3.1.53 Facility owner – The owner of record of any facility or public building or any person who exercises control over a facility or public building to the extent that said person contracts for or permits renovation to or demolition of said facility or public building.

1.3.1.54 Federal government owned building – Any building, which is not a school building as defined in 40 CFR 763.83, owned by the United States Federal Government or any other type of US military building.

1.3.1.55 Fixed object - A piece of equipment or furniture in the work area which cannot be removed from the work area.

1.3.1.56 Friable Material - Materials that when dry can be crumbled, pulverized, or reduced to powder by hand pressure, and includes previously nonfriable material after such previously nonfriable material becomes damaged to the extent that, when dry, it may be crumbled, pulverized, or reduced to powder by hand pressure.

1.3.1.57 Glovebag Technique - A method with limited applications for removing small amounts of friable asbestos-containing material from HVAC ducts, short piping run, valves, joints, elbows, and other non-planar surfaces in a non-contained (plasticized) work area. The glovebag assembly is a manufactured or fabricated device consisting of a glovebag (typically constructed of 6 mil transparent polyethylene or polyvinylchloride plastic) two inward projecting long sleeves, an internal tool pouch, and an attached, labeled receptacle for asbestos waste. The glovebag is constructed and installed in such a manner that it surrounds the object or material to be removed and contains all asbestos fibers released during the process. OSHA's definition of a glove bag is that it may be no larger than 60"x60", may be used only one time, may not be slid along the pipe and may not be joined to form a continuous line of glove bags. All workers who are permitted to use the glovebag technique must be highly trained, experienced, and skilled in this method. This definition will be strictly applied to on all projects.

1.3.1.58 HVAC - Heating, ventilation, and air conditioning system.

1.3.1.59 HEPA Filter - A high efficiency particulate air filter capable of trapping and retaining particles 0.3µm in diameter or larger with 99.97% efficiency.

1.3.1.60 HEPA Vacuum - A vacuum system equipped with HEPA filtration.

1.3.1.61 Holding Area - A chamber in the equipment decontamination enclosure located between the washroom and an uncontaminated area. The holding area comprises an airlock.

1.3.1.62 Homogenous area –an area of surfacing material or thermal system insulation that is uniform in color or texture.

1.3.1.63 Independent third-party air monitor – A person retained to collect area air samples to be analyzed by and for the owner of the building or facility being abated. The person must not be employed by the abatement contractor to analyze any area samples collected during the abatement projects being monitored or the clearance samples.

1.3.1.64 Industrial building – Any building where industrial or manufacturing operations or processes are conducted to which access is limited principally to employees and contractors of the facility operator or to invited guests under controlled conditions.

1.3.1.65 Inspection – Any activity undertaken in a school building, public building, or commercial building to determine the presence or location, or to access the condition of, friable or non-friable asbestos-containing building material (ACBM) or suspected ACBM, whether by visual or physical examination, or by collecting samples of such material. This term includes re-inspections of friable and non-friable known or assumed ACBM, which has been previously identified. The term does not include the following:

A. Periodic surveillance of the type described in 40 CFR §763.92(b) solely for the purpose of recording or reporting a change in the condition of known or assumed ACBM.
B. Inspections performed by employees or agents of the federal, state, or local government solely for the purpose of determining compliance with applicable statutes or regulations; or
C. Visual inspections of the type described in 40 CFR §763.90(I) solely for the purpose of determining completion of response actions.

1.3.1.66 Intact– As defined by 29 CFR §1926.1101(b), ACM that has not crumbled, been pulverized, or otherwise deteriorated so that the asbestos is no longer likely to be bound with its matrix.

1.3.1.67 Layer – Any constituent of an asbestos bulk sample that exhibits different physical properties such as color or composition and can be readily separated from the rest of the sample with an instrument such as a modeler's knife.

1.3.1.68 License – Any license or regulation issued under this chapter.

1.3.1.69 Licensee – A person who meets all qualifications and has been issued a license or registration by the Texas Department of State Health Services in accordance with these sections.

1.3.1.70 Major Fiber Release Episode – Any uncontrolled or unintentional disturbance of ACBM, resulting in a visible emission, which involves the falling or dislodging of more than 3 square or linear feet of friable ACBM.
1.3.1.71 Management plan – A written plan describing appropriate actions for surveillance and management of asbestos containing material (ACM).
1.3.1.72 Mini-containment –A small walk-in containment that accommodates no more than two people and conforms to its localized work area. A mini-containment is constructed of 6-mil thick plastic sheeting or the equivalent and is kept under negative pressure by means of HEPA vacuum or similar ventilation unit as describe for a mini-enclosure in 29 CFR §1926.1101(g)(5)(vi).
1.3.1.73 Minor Fiber Release Episode – Any uncontrolled or unintentional disturbance of ACBM, resulting in a visible emission, which involves the falling or dislodging of 3 square or linear feet or less of friable ACBM.
1.3.1.74 Movable Object - A piece of equipment or furniture in the work area which can be removed from the work area.
1.3.1.75 MSDS -Material safety data sheet. Also known as SDS.
1.3.1.76 Negative Pressure Assessment – A demonstration by an employer in accordance with 29 CFR §1926.1101(f) that employee exposure during an operation is expected to remain below the PELS for the duration of the applicable asbestos-related activity.
1.3.1.77 Negative Pressure Ventilation System - A portable exhaust system equipped with HEPA filtration and capable of maintaining a constant low velocity air flow into contaminated areas from adjacent uncontaminated areas.
1.3.1.78 NESHAPS - The National Emission Standards for Hazardous Air Pollutants (40 CFR Part 61).
1.3.1.79 NIOSH - The National Institute for Occupational Safety and Health CDC-NIOSH, Building J N.E., Room 3007, Atlanta, Ga. 30333.
1.3.1.80 Nonfriable material – Material which, when dry, may not be crumbled, pulverized, or reduce to powder by hand pressure.
1.3.1.81 NVLAP – The National Voluntary Laboratory Accreditation Program.
1.3.1.82 Operations and maintenance (O&M) – Operations and maintenance activities are repairs, maintenance, renovation, installation, replacement, or cleanup of building materials or equipment.
1.3.1.83 Operations and maintenance (O&M) manual – A record or O&M activities in a public building. The public building owner shall record each individual O&M activity in the manual, including the date of activity, the persons performing the activity, complete description of the activity, including methods used to prevent the emission of asbestos fibers, and the amount of asbestos removed. An updated total of the amount of asbestos abated shall be kept as a comparison to the amount estimated in the annual O&M notification. The manual will be made available to the department upon request.
1.3.1.84 OSHA - The Occupational Safety and Health Administration, 200 Constitution Ave. Washington, D.C. 20210.7
1.3.1.85 Outside Air - The air outside buildings and structures.
1.3.1.86 PAT – Proficiency Analytical Testing.
1.3.1.87 PCM – Phase-contract microscopy, a method of analysis for overall airborne fiber counts using an optical microscope.
1.3.1.88 PEL – Permissible Exposure Limit as defined by OSHA regulations (29 CFR §1926.1101).
1.3.1.89 PLM – Polarized-light microscopy, a method of analysis for detection of the presence and type of asbestos.
1.3.1.90 Plasticize - To cover floors and walls with plastic sheeting as herein specified.
1.3.1.91 Preventive measures – Actions taken to reduce disturbance of ACBM or otherwise eliminate the reasonable likelihood of the material becoming damaged or significantly damaged.
1.3.1.92 Prior Experience - Experience required of the contractor on asbestos projects of similar nature and scope to ensure capability of performing the asbestos abatement in a satisfactory manner. Similarities shall be in areas related to material composition, project size, abatement methods required, number of employees and the engineering, work practice and personal protection controls required.

1.3.1.93 Public building – The interior space of a building used or to be used for the purposes that provide for public access or occupancy, including prisons and similar buildings. Interior space includes exterior hallways connecting buildings, porticos, and mechanical systems used to condition interior space. The term includes any building during a period of vacancy, including the period during preparations prior to actual demolition. The term does not include:

A. an industrial facility to which access is limited principally to employees of the facility because of processes or functions that are hazardous to human safety or health.
B. a federal building or installation (civilian or military).
C. a private residence.
D. an apartment building with no more than four dwelling units; or
E. a manufacturing facility or building that is limited to workers and invited guests under controlled conditions.
F. a building, facility, or any portion of which has been determined to be structurally unsound and in danger of imminent collapse by a professional engineer, registered architect, or a city, county, or state government official.
G. the portion of a building that has become structurally unsound due to demolition.

1.3.1.94 RACM–Regulated asbestos-containing material. RACM means:

A. Friable asbestos material.
B. Category I nonfriable ACM that has become friable.
C. Category I nonfriable ACM that will be or has been subjected to sanding, grinding, cutting, or abrading: or
D. Category II nonfriable ACM that has a high probability of becoming or has become crumbled, pulverized, or reduced to power by the forces expected to act on the material in the course of demolition or renovation operations.

1.3.1.95 Regulated area – The demarcated area in which asbestos abatement activity takes place, and in which the possibility of exceeding the permissible exposure limits (PEL) for the concentrations of airborne asbestos exists.

1.3.1.96 Renovation – Additions to or alterations of the building for purposed of restoration by removal, repairing, and rebuilding.

1.3.1.97 Removal - The stripping of any asbestos-containing materials from surfaces or components of a facility.

1.3.1.98 Renovation – Additions to or alterations of the building for purposed of restoration by removal, repairing, and rebuilding.

1.3.1.99 Response action – A method, including removal, encapsulation, enclosure, repair, and operation and maintenance, which protects human health and the environment from friable ACBM.

1.3.1.100 Responsible person – The individual that is designated by the licensed Asbestos Abatement Contractor, Asbestos Operations and Maintenance Contractor, Asbestos laboratory, Asbestos Consultant Agency, or Asbestos Management Planner Agency, as responsible for their operations and compliance with these rules.

1.3.1.101 RFCI-Resilient Floor Covering Institute

1.3.1.102 Shower room - A room between the clean room and the equipment room in the worker decontamination enclosure with hot and cold or warm running water controllable at the tap and suitably arranged for complete showering during decontamination.

1.3.1.103 Small-scale, short-duration activities (SSSD) – are tasks such as, but not limited to removal of asbestos-containing insulation on pipes; removal of small quantities of asbestos-containing insulation on beams or above ceilings; replacement of an asbestos-containing gasket on a valve; installation or removal of a small section of drywall; installation of electrical conduits through or proximate to asbestos-containing materials. These tasks, when performed in a commercial building, do not require accreditation. SSSD can be further defined by the following:

A. A. Removal of small quantities of ACM only if required in the performance of another maintenance activity not intended as asbestos abatement.
B. Removal of asbestos-containing thermal system insulation not to exceed amounts greater than those which can be contained in a single glove bag.
C. Minor repairs to damaged thermal system insulation which do not require removal.
D. Repairs to a piece of asbestos-containing wallboard.

E. Repairs, involving encapsulation, enclosure, or removal, to small amounts of friable ACBM only if required in the performance of emergency or routine maintenance activity and not intended solely as asbestos abatement. Such work may not exceed amounts greater than those which can be contained in a single prefabricated mini-enclosure. Such an enclosure shall conform spatially and geometrically to the localized work areas, in order to perform its intended containment function.

1.3.1.104 Staging area - Either the holding area or some area near the waste transfer airlock where containerized asbestos waste has been placed prior to removal from the work area.

1.3.1.105 Start date – The dates defined as:

A. asbestos abatement start date – the date on which the disturbance of asbestos begins.
B. demolition/renovation start date – the date on which the demolition or renovation process begins.

1.3.1.106 Stop date – the dates defined as:

A. asbestos abatement stop date (completion date) – The date upon which air monitoring clearance of asbestos abatement has been achieved. Where air clearance is not required, such as roofing removal, the date upon which the removal of asbestos-containing material is complete.
B. Demolition/renovation stop date – the date on which the demolition or renovation is complete.

1.3.1.107 Strip - To take off friable asbestos materials from any part of facility.

1.3.1.108 Structural Member - Any load-supporting member of a facility, such as beams and load-supporting walls or any non-load-supporting walls or any non-load-supporting member, such as ceilings and non-load-supporting walls.

1.3.1.109 Surfactant - A chemical wetting agent added to water to improve penetration.

1.3.1.110 Survey – An activity undertaken in a school building, or a public and commercial building to determine the presence or location, or to access the condition of, friable or non-friable asbestos-containing building material (ACBM) or suspected ACBM, whether by visual or physical examination, or by collecting samples of such material. This term includes re-inspections of friable and non-friable known or assumed ACBM, which has been previously identified. The term does not include the following:

A. periodic surveillance of the type described in 40 CFR §763.92(b) solely for the purpose of recording or reporting a change in the condition of known or assumed ACBM.
B. inspections performed by employees or agents of federal, state, or local government solely for the purpose of determining compliance with applicable statutes or regulations; or
C. visual inspections of the type described in 40 CFR §763.90(I) solely for the purpose of determining completion of response action.

1.3.1.111 TAHPR– Texas Asbestos Health Protection Rules

1.3.1.112 TEM – Transmission Electron Microscopy.

1.3.1.113 Transportation of asbestos containing material (ACM) – Moving asbestos material from one site to another.

1.3.1.114 Visible Emissions - Any emissions containing particulate material that are visually detectable without the aid of instruments. This does not include condensed un-combined water vapor.

1.3.1.115 Waste Transfer Airlock - A decontamination system utilized for transferring containerized waste from inside to outside of the work area.

1.3.1.116 Wet Cleaning - The process of eliminating asbestos contamination from building surfaces and objects by using cloths, mops or other cleaning utensils which have been dampened with water and afterwards thoroughly decontaminated or disposed of as asbestos contaminated waste.

1.3.1.117 Work Area - Designated rooms, spaces, or areas of the project in which asbestos abatement actions are to be undertaken or which may become contaminated as a result of such abatement actions. A contained work area is a work area which has been sealed, plasticized, and equipped with a decontamination enclosure system. A non-contained work area is an isolated or controlled-access work area which has not been plasticized nor equipped with a decontamination enclosure system.

1.3.1.118 Worker Decontamination Enclosure - A decontamination system consisting of a clean room, a shower room and an equipment room separated from each other and from the work area airlocks and contained doorways. This system is used for all workers entering and exiting the work area and for equipment.

1.3.1.119 Working days – Monday through Friday including holidays which fall on those days.

1.4 Scope of Work

1.4.1 This specification covers the abatement of asbestos hazards from building structures and components listed in 1.4.2. It is the intent of the Contract Documents to show all of the work necessary to complete the project.

1.4.1.1 Project schedule is as follows:

Project Walk-through:	**TBD** **San Angelo Independent School District** **Carver Learning Center** **301 West 9th Street** **San Angelo, Texas 76903**
Bid Opening:	**TBA**
Pre-Construction Meeting:	First Day of Project
Notification Date:	In sufficient time to begin on selected start date.
Bond and Insurance Submitted:	To Consultant before start of project.
Project Start Date:	**TBD**
Project Completion Date:	**TBD**

1.4.2 Asbestos Abatement is to be performed for **San Angelo Independent School District** at the Carver Learning Center located at 301 West 9th Street in San Angelo, Texas

1.4.3 A floor plan of the facility is located at the back of these specifications in Appendix A.

1.4.4 All submittal forms are located at the back of these specifications in Appendix B.

1.4.5 The work will consist of the removal and proper disposal of the following asbestos-containing materials:

Base Bid - Asbestos Abatement

- Remove and properly dispose of approximately 30,000 square feet of asbestos containing joint compound/texture on sheetrock fur down (bulkhead) in the basement and sheetrock walls throughout the building and basement, except the men's & women's restrooms and hallway 1, as marked on site map pages 1 and 2.
- Remove and properly dispose of approximately 1,250 square feet of asbestos containing plaster walls beneath a heavy textured skim coat located in room 1, room 2, hallway 5, and the original exterior east wall of the building, as marked on site map page 3.
- Remove and properly dispose of approximately 2,050 square feet of asbestos containing joint compound/texture on sheetrock ceilings located in room 8, room 12, room 14, cafeteria, restrooms throughout, closets throughout, and hallway 4, as marked on site map page 1.
- Remove and properly dispose of approximately 30 asbestos containing hard fittings on pipes located in the crawl space beneath the building, as marked on site map page 4.
- Remove and properly dispose of approximately 145 square feet of asbestos containing tan pebble patterned vinyl sheet linoleum with tan mastic on floors located in room 17 and room 22, as marked on site map page 5. This material is beneath 12x12 off-white with gray streaked floor tile, 12x12 beige floor tile, and plywood.
- Remove and properly dispose of approximately 165 square feet of asbestos containing black mastic on wooden floors associated with 12x12 beige floor tile located in room 5 restrooms, as marked on site map page 5. This material is beneath 12x12 off-white with gray streaked floor tile and a layer of wood.
- Remove and properly dispose of approximately 6,800 square feet of asbestos containing felt paper with black mastic on floors located throughout the east side of the building, as marked on site map page 5. This material is beneath wooden plank flooring and/or plywood beneath a mix of carpet and vinyl floor tile.
- Remove and properly dispose of approximately 50 square feet of asbestos containing black mastic glue dots on plaster walls behind sheetrock located in room 18 closet, as marked on site map page 3. This material is assumed to be throughout the building where sheetrock is directly applied to plaster walls.
- Remove and properly dispose of approximately 50 square feet of asbestos containing wall-mounted transite chalkboards located in room 4 and room 7, as marked on site map page 3. These shall be removed as a whole component.
- Remove and properly dispose of approximately 1,300 square feet of window assemblies and associated asbestos containing interior window caulking throughout the building, as marked on site map page 3.
- Remove and properly dispose of approximately 10 square feet of asbestos containing purple spray-on sink undercoating located in room 5 northside restroom, as marked on site map page 3.

Site Specific Notes:
Window assemblies shall be removed as a component from the exterior of the building following all NESHAP regulations. After removal, all exterior openings **not** located within the fenced off areas shall be boarded and secured with plywood.
This structure is planned for full demolition and shall therefore be cleared utilizing PCM analysis.

Note:
No work may begin until notice to proceed is given by the building owner or his representative. No abatement preparations or procedures may begin unless the consultant's project manager is on site and is notified that work is about to begin.

This includes all prep work, including arrival and stocking. This also includes all project tear down.

FIRE RETARDANT POLY SHALL BE USED.

These specifications do not state all of the requirements of the applicable regulations and are only to be used to supplement those regulations. All work must be performed in accordance with applicable Federal, State and Local Regulations. Where a conflict exists between these specifications and/or regulations, the more stringent shall apply. The contractor and all workers are to be licensed by the State of Texas.

All quantities are approximate and must be verified by the contractor during the walk through.

The abatement contractor is responsible for all sampling as required by OSHA and shall be made available to the project manager daily. The abatement contractor must give the project manager a letter stating exactly how this OSHA sampling is to be accomplished prior to the start of work. Negative exposure data will not be acceptable in lieu of personal OSHA sampling.

1.4.2.1 Pre-abatement air sampling of the designated work area and the adjoining area is to be accomplished by the project manager/air monitor technician. The project manager/air monitoring technician has the express permission to conduct the final visual inspection and to take the final clearance air samples.

1.4.2.1.1 The air monitoring scheme for this project shall be a minimum of the following:

- Base Line Samples – There shall be a minimum of 5 samples taken of each work area prior to the disturbance of ACM. There is to be a minimum of 1,250 liters collected at not over ten (10) liters per sample, these samples are to be archived for 60 days. When there are multiple work areas the base lines are to be taken just prior to starting in that work area.
- Prep Work Samples – There is to be a minimum of one (1) sample for each adjacent area and three (3) samples in the work area taken each day. These are to be taken at 4 to 5 liters collecting approximately 1250 liters per sample each. When feasible there should be a set of samples taken during the morning shift and the evening shift. The PM/AMT may use his desecration to vary from this sampling when a different sampling strategy will better serve representative sampling of the work progress.
- Ambient Samples – The following areas are the minimum requirements for ambient air samples, or work samples. Adjacent area, one (1) per area, negative pressure machines, at least one (1) in the negative air exhaust (if there is more than one machine, rotate the samples each time a new cassette or sample is started at each machine), a minimum number of samples to assure that all areas of the containment are being sampled during a work shift, care must be taken to assure that there are no dead spaces that are not sampled, one (1) at the bag-out area, one (1) at the decon exit. These samples are to be analyzed at the end of each shift.
- For all NESHAP work one (1) sample shall be taken down wind and one (1) sample up wind. When work is conducted in an occupied building additional sampling is to be conducted within the occupied areas. Size of occupied area shall dictate the number of samples to be taken in these areas. A minimum of one (1) shall be taken with no more than three (3) total be taken unless instructed by the consultant.
- Aggressive Clearance Samples – If the samples are to be analyzed by PCM there is to be a minimum of five (5) samples taken inside containment; one (1) field blank and one (1) box blank taken at approximately 1250 liters per sample. If the samples are to be analyzed by TEM there are to be 5 samples taken inside, 5 samples taken outside, 1 box blank and 2 field blanks.
- The Project manager/Air monitor technician must remain on site while the final clearance samples are running unless access to the regulated area can be controlled.
- The project manager assigned to this project has the express permission to conduct visual clearance and to take the above specified clearance sampling.

All daily samples are to be collected using 25 mm cassettes with a 0.8 MCE filter. These samples are to be analyzed according to the NIOSH 7400 protocol, counting rules using a Phase Contract Microscope.

Each day there are to be a minimum of two (2) field blanks or 10% of the total samples collected analyzed.

Samples are to be analyzed at the end of each shift and results posted. Should the results of any outside samples be above the clearance level of 0.010 f/cc, work is to be suspended, and the consultant notified. All corrective action is to be documented. Should it be discovered that there has been a breech, the area where the breech occurred is to be completely cleaned using a HEPA vacuum and/or wet wipe.

These are the minimum air monitoring requirements. Should, during the course of the project, the PM/AMT see the need for additional sampling they are to proceed and notify the Consultant for approval.

1.4.2.1.2 The contractor is responsible for all scaffolding used on the project and for the training required by OSHA of all employees including the PM/AMT on the project. This includes all rolling towers; platform scaffolding and all other ladders or scaffolding used on this project. The consultant accepts no responsibility, nor liability for the erection of any scaffolding, for the load limits of any scaffolding or for other safety issues involving any scaffolding or ladders used except those responsibilities to the Consultant's employees. All scaffolding is to be designed by a registered engineer, and he is to stamp and sign this design and a copy of this is to be given to the Consultant. The Consultant is to be held harmless and is to indemnify from any legal action arising from any accident in connection from any scaffolding, rolling towers or ladders used on this project.

1.4.2.2 No pre-abatement work is to start until the project manager or consultant has approved all submittals required in these specifications. All submittals must be provided to the consultant or the PM/AMT no later than the pre-start meeting.

1.4.2.3 Pre-Abatement

1.4.2.3.1 Representative for **San Angelo Independent School District** must be notified as to the work schedule and
warning signs as required in 3.1.1.1 of these specifications are to be posted.

1.4.2.3.2 Contractor is responsible for the securing of the work area as specified in 1.8. The perimeter of the regulated work area must have barricades installed.

1.4.2.3.3 Pre-clean the work area using HEPA vacuum and/or wet wipes.

1.4.2.3.3 Remove any furniture, fixtures and equipment from the work area and store as directed by the Owner. After all work is complete all removed items are to be replaced in their original locations.

1.4.2.3.4 Install critical barriers and seal all electrical outlets, vents, lights, other openings, and objects which cannot be disconnected or removed from the work area.

1.4.2.3.6 Set up containment as required in 3.1.1.

1.4.2.3.7 Set up worker decontamination enclosure system as required in 3.1.2.

1.4.2.3.8 Establish and mark emergency exits as required in 3.1.3.5.

1.4.2.3.9 Install pressure differential ventilation equipment to provide an air change in the work area every 15 minutes. This ventilation system is to remain in operation until final air clearance is received.

1.4.2.3.10 A strip recorder will be used to measure the negative air pressure within containment and a complete copy of this is to be provided to the Consultant each day. A negative pressure of 0.02 inches H_20 or greater is to be maintained at all times.

1.4.2.4 Abatement Activities

1.4.2.4.1 All HVAC and any other ventilation must be shut down and disconnected and locked-out and tagged-out when possible.

1.4.2.4.2 Removal of asbestos containing material must be pre-wet with amended water and removed a section at a time.

1.4.2.4.3 Contaminated material is to be bagged in small sections as it is removed. No buildup of debris is to occur on the floor. Bags must be washed and placed in a second bag when bagging out. Bagged material must be removed through a bag out chamber unless there is only one entrance/exit to the contained area. In the event there is only one entrance/exit point, material may be removed through the decon unit.

1.4.2.4.4 Work time shall be 7:00 A.M. to 5:00 P.M. Monday through Friday, unless prior arrangements are made with the Owner and the Consultant. The contractor shall work a minimum of an eight hour work shifts. A shift must not exceed 8 hours unless previous arrangement has been made and approved by the project manager. If the contractor works beyond an 8-hour shift, he will be back charged for the PM/AMT time at a rate of time and a half for weekdays and double time for weekends.

1.4.2.4.5 Contractor is to furnish the Project Manager with a work schedule showing the start time and stop time each day and projected completion date.

1.4.2.4.6 The Contractor will be back charged by the Owner for the Project Manager's time and expenses plus 10% when the Contractor fails to work within these scheduled work hours due to late arrivals or no-shows.

1.4.2.4.7 The Contractor will be back charged by the Owner for the Project Manager's time and expenses plus 10% for failure to have on-site his competent person, as required by OSHA and TAHPR, or failure to have adequate personnel or equipment.

1.4.2.4.8 Charges for the Project Manager will be charged back to the Contractor by the Owner should the project not be completed on the date specified in the contract.

NOTE: It is not the intent of the Owner to penalize the Contractor for unavoidable acts of God, but to confirm the intentions of the Owner's contract with the Contractor. It is the intent to ensure the Contractor will maintain an adequate work force, equipment, and materials to complete this project in a timely and adequate manner as called for by the Contract and these specifications. Failure to meet the dates may be cause for implementation of the Liquidated Damage Clause of the contract.

1.4.2.4.9 Final inspection according to specifications. See Section 3.9

1.4.2.4.10 Final air samples will be taken by the Project Manager. Samples shall be analyzed by **PCM.** Should this set fail the contractor is to re-clean and a second set of samples taken. Expenses incurred for the collection of this set will be paid for by the contractor.

1.4.2.4.11 Disposal and transportation as per 3.10 of specification.

1.4.2.4.12 Complete documentation as per EPA requirements.

1.4.2.4.13 The required minimum work force for this project is to be a sufficient number of certified asbestos workers to complete this project as scheduled, the number of workers must be approved by the project manager, and there must be sufficient certified supervisors. The supervisor must be present at all times and must go into the containment at least 25% of the time. All workers on this project must have a current state asbestos license when applicable in hand as well as current certification and physical. No pending application for workers or supervisors will be acceptable. All workers must have current certification as required by AHERA, and a current state license. If the project manager feels that there are too many workers for the work area, he has the authority to remove any number of workers he deems adequate. No work may be conducted unless the Consultants' Project Manager is present at the job site.

1.5 Description of Work

1.5.1 The work specified herein shall be the removal and disposal of asbestos-containing materials by competent persons; trained, knowledgeable and qualified in the techniques of abatement, handling and disposal of asbestos containing and asbestos contaminated materials and the subsequent cleaning of contaminated areas, who comply with all applicable Federal, State, and Local regulations and are capable of and willing to perform the work of this Contract.

1.5.2 The Contractor shall supply all labor, materials, services, insurance, permits and equipment necessary to carry out the work in accordance with all applicable Federal, State and Local regulations, and these specifications. The Contractor shall NOT be responsible for the TDSHS notification fee. This fee shall be the responsibility of the Building Owner.

1.5.3 The Contractor shall pay all royalties and license fees. The Contractor shall defend all suits or claims for infringement of any patent rights and shall save the Consultant and Owner harmless from loss on account hereof, except that the Owner shall be responsible for all such loss when a particular design process on the product of a particular manufacture or manufacturer is specified, but if the Contractor has reason to believe the design, process or product specified is an infringement of a patent the Contractor shall be responsible for such loss unless he promptly gives such information to the Owner.

1.5.4 The Contractor is responsible for the grounds surrounding the buildings as well as the building itself during the removal time. If there is any damage to the property, any of its furnishings, finishes or any other of the owner's property. If there is any damage to any of the preceding the contractor shall pay full replacement cost.

1.5.4.1 If the Owner permits the Contractor to use any of the Owner's equipment, tools or facilities, such use will be gratuitous and the Contractor shall release the Owner from any responsibility arising from claims for personal injuries, including death, arising out of the use of such equipment, tools, or facilities irrespective of the condition thereof or any negligence on the part of the Owner in permitting their use.

1.6 Applicable Standards and Guidelines

1.6.1 General Requirements

1.6.1.1 All work under this contract shall be done in strict accordance with all applicable Federal, State and Local regulations, standards and codes governing asbestos abatement and other trade work done in conjunction with the abatement.

1.6.1.2 The most current edition of any relevant regulation, standard, document or code shall be in effect. Where conflict among the requirements or with these specifications exists the most stringent requirements shall be utilized.

1.6.1.3 Copies of all standards, regulations, codes. M.S.D. Sheets and other applicable documents, including this specification and those listed in Section 1.6.2 shall be available at the work site in the clean change area of the worker decontamination system.

1.6.2 Specific Requirements.

1.6.2.1 Occupational Safety and Health Administration (OSHA)

1.6.2.1.1 Title 29 Code of Federal Regulations, Section 1910,1001-General Industry Standard for Asbestos.

1.6.2.1.2 1926.1101, titled, "Occupational Exposure to Asbestos, Tremolite, Anthophyllite, Actinolite", October 11, 1994.

1.6.2.1.3 Title 29 Code of Federal Regulation, Section 1910, 134 General Industry Standard for Respiratory Protection.

1.6.2.1.4 4 Title 29 Code of Federal Regulations, Section 1926 Construction Industry.

1.6.2.1.5 Title 29 Code of Federal Regulations, Section 1910.2 Access to Employee Exposure and Medical Records.

1.6.2.1.6 Title 29 Code of Federal Regulations, Section 1910.1200 Hazard Communication.

1.6.2.2 Environmental Protection Agency (EPA)

1.6.2.2.1Title 40 Code of Federal Regulations, Part 61, Subparts A and M (Revised Subpart B)-National Emission Standard for Asbestos.

1.6.2.2.2Title 40 CFR Part 61, Subpart G, 763.120-763.126 and Appendices A, C, D, and E titled Asbestos Abatement Projects: Worker Protection Rules" February 25, 1987.

1.6.2.2.3Title 40 CFR Part 763 Subpart E, 763.80-763.99, and Appendices A and B titled, Asbestos Containing Materials in Schools" (AHERA rules), July 1, 1992. Plan" February 3, 1994.

1.6.2.2.4Title 40 CFR Part 763 Subpart E, Appendix B, titled, Work Practices and Engineering Controls for Small Scale, Short Duration Operations Maintenance and Repair (O&M) Activities Involving ACM", July 1,1992.

1.6.2.2.5Title 40 CFR Part 763, Subpart E, Appendix D, titled, "Transport and Disposal of Asbestos Waste" July 1, 1993.

1.6.2.2.6Title 40 CFR Part 763, Subpart F, Appendix A, Section 1, Titled," Polarized Light Microscopy", July 1, 1992.

1.6.2.2.7Title 40 CFR Part 763, Subpart E, Appendix A, titled, "Transmission Electron Microscopy Analytic Methods", July 1 1992.

1.6.2.2.8Title 49 CFR Chapter 1, Part 172, Appendix A, Subchapter C, October 1, 1992, and Title 49 CFR Chapter 1, Part 172, Appendix A, Subpart H, October 1, 1992.

(The above regulations are required to be on the job site as required by the TDSHS (295.33).

1.7 Submittals and Notices

1.7.1 Contractor shall:

1.7.1.1 Prior to Commencement of Work:

1.7.1.1.1 All projects regardless of size must have a notification sent to the Texas Department of State Health Services (11) eleven working days prior to the start of the project. It is the responsibility of the abatement contractor to send this notification. The building owner is responsible for the permit fee that is required by the Texas Department of State Health Services unless there is a prior agreement with the owner. Provide Building Owner and Consultant with a copy of the notification.

1.7.1.1.2 Submit proof satisfactory to the Building Owner that required permits, license, site location and arrangements for transport and disposal of asbestos-containing waste materials have been made. Obtain and submit a copy of handling procedures and list of protective equipment utilized for asbestos disposal at the landfill, signed by the Landfill Owner (Required for all abatement projects).

1.7.1.1.3 Submit documentation satisfactory to the Building Owner that the Contractor's employees, including foreman, supervisors and any other company personnel or agents who may be exposed to airborne asbestos fibers or who may be responsible for any aspects of abatement activities, have received adequate training that includes, at a minimum, information in Part 4, Section 4.1 of this document.

1.7.1.1.4 Submit documentation from a physician that all employees or agents who may be exposed to airborne asbestos in excess of background level have been provided with an opportunity to be medically monitored to determine whether they are physically capable of working while wearing the respirator required without suffering adverse health effects. In addition, document that personnel have received medical monitoring as required in OSHA 29 CFR 1910.1001. The Contractor must be aware of and provide information to the examining physician about unusual conditions in the workplace environment (e.g. high temperatures, humidity, chemical contaminant) that may impact on the employee's ability to perform work activities.

1.7.1.1.5 Contractor should, after inspection of job site, submit in writing to the Owner any existing damage found.

1.7.1.1.6 Spray glue shall not be applied to any walls, doors, or any other finished surface within any building. Damage caused by any spray glue is the sole responsibility of the abatement contractor and must be cleaned prior to leaving the project. If the contractor does not do so the owner will have the spray glue removed and back charge the contractor. Where splash guards are attached to a finished surface it is recommended that the contractor use 3M no-stick blue tape. The abatement contractor shall repair any damage to any finished surface caused by his work. Where painting is required, it shall be the entire area damaged, i.e., if it is a wall, it shall be painted corner to corner, floor to ceiling. If the paint cannot be matched at the owners request the entire room or units, i.e., doors etc. must be painted in a color selected by the owner. The abatement contractor shall also exercise caution and common sense when removing any cove base and make sure that there is no damage to the walls. Any damage caused by removal of the cove base shall be repaired at the abatement contractor's expenses.

1.7.1.1.7 Any damage other than as listed in 1.7.1.1.6 that is caused to the building or any building components or building furnishings shall be repaired at the abatement contractor's expenses.

1.7.1.1.8 Submit manufacturer's certification that the HEPA vacuum, negative pressure ventilation units, and other local exhaust ventilation equipment conform to ANSI 29,2-79.

1.7.1.1.9 Document NIOSH approvals for all respiratory protective devices utilized on the site. Include manufacturer certification of HEPA filtration capabilities for all cartridges and filters.

1.7.1.1.10 Submit documentation of respirator fit testing for all Contractor employees and agents who must enter the work area. This fit testing shall be in accordance with qualitative procedures as detailed in the OSHA Standard 29 CFR 1910.1025 Appendix D Qualitative Fit Text Protocol or be quantitative in nature.

1.7.1.2 Submit copies of all M.S.D. sheets for all products that are to be used on the project. Copies of these sheets must be kept in a notebook at the job site.

1.7.1.3 Submit documentation of your company's Hazard Communication Program.

1.7.1.2 During Abatement Activities:

1.7.1.2.1 Submit copies of all transport manifests, trip tickets and disposal receipts for all asbestos waste materials removed from the work area during the abatement process to the building owner or his representative.

1.7.1.2.2 Submit daily copies of work site entry logbooks with information on worker and visitor access.

1.7.1.2.3 Submit logs documenting filter changes on respirators, HEPA vacuums, negative pressure ventilation units, and other engineering controls.

1.7.1.2.4 Submit results of materials testing conducted during abatement activities (e.g., testing of encapsulant for depth of penetration, testing of substitute materials for adherence to encapsulated surfaces).

1.7.1.2.5 Post in the clean room area of the worker decontamination enclosure a list containing the names, addresses, and telephone numbers of the Contractor, the Building Owner, the Asbestos Project Officer, The General Superintendent, the Air Sampling Professionals, the Testing laboratory and any other personnel who may be required to assist during abatement activities (e.g. Safety Officer, Building Maintenance Supervisor, Energy Conservation Officer).

1.7.1.2.6 The contractor shall certify in writing that no materials used in the work contain lead or asbestos materials in them in excess of amounts allowed by Local/State standards, laws, codes, rules and regulations; the Federal Environmental Protection Agency (EPA) standards and/or the Federal Occupational Safety and Health Administration (OSHA) standards, whichever is most restrictive. The Contractor shall provide this written certification as part of his submittals under Section 1.7 of the specifications.

1.7.2 Owner Shall:

1.7.2.1 Prior to Commencement of Work:

1.7.2.1.1 Notify occupants of work areas that may be disrupted by the abatement of project dates and requirements for relocation. Arrangements must be made prior to start, for relocation of desks, files, equipment, and personal possessions to avoid unauthorized access into the work area.

1.7.2.1.2 Document that Owner's employees who will be required to enter the work area during abatement have received training equal to that detailed in Part 4, Section 4.1. (This training may be provided by the Contractor's or the Owner's training consultant at the Owner's discretion).

1.7.2.2 During Abatement

1.7.2.2.1 Submit to the Contractor, results of bulk material analysis and air sampling data collected during the course of the abatement.

1.7.2.2.2 The Contractor will be responsible for personal air monitoring as required by OSHA for his employees.

1.7.2.2.3 The Owner will be responsible for furnishing an Asbestos Consultant. The Consultant may assign some on-site duties to a Project Manager/Air Monitoring Professional. This Project Manager/Air monitor technician will be in charge of all air monitoring as required by the Owner. The Project Manager will have the authority to stop work at any time he feels it necessary, because of failure of the Contractor to follow these specifications or regulations. Any unsafe conditions that result in any accident or injury shall be the responsibility of the contractor and said contractor shall hold the owner and the consultant harmless from any legal proceeding or claims. The Project Manager/Air monitor technician shall be responsible for the final visual inspection and for the taking of the final clearance air sample and said responsibilities have been granted to the Project Manager/Air Monitor Technician by the consultant.

1.7.2.2.4 The Project Manager/Air monitor technician shall be responsible for the final visual inspection and for the taking of the final clearance air samples.

1.7.3 Construction Contractor Shall:

1.7.3.1 Prior to Commencement of Work:

1.7.3.2 The construction contractor shall certify in writing that no materials used in the work contain lead or asbestos materials in them in excess of amounts allowed by Local/State standards, laws, codes, rules and regulations; the Federal Environmental Protection Agency (EPA) standards and/or the Federal Occupational Safety and Health Administration (OSHA) standards, whichever is most restrictive. The Contractor shall provide this written certification as part of his submittals under Section 1.7 of the specifications.

1.8 Site Security

1.8.1 The work area is to be restricted to authorized, trained, and protected personnel only. These may include the Contractor's employees, employees of Subcontractors, Owner employees and representatives, State and Local inspectors and any other designated individuals. A list of authorized personnel shall be established prior to job start and posted in the clean-room of the worker decontamination facility.

1.8.1.1 Entry into the work area by unauthorized individuals shall be reported immediately to the Building Owner and the project manager by the Contractor.

1.8.1.2 In addition to the above logbook, each worker or each licensee on the project must keep a daily record of his or her activities (TDSHS Regulations 295.58 (d)).

1.8.1.3 A Logbook shall be maintained in the clean-room area of the worker decontamination system. Anyone who enters the work area must record name, affiliation, time in and time out for each entry.

1.8.1.4 Access to the work area shall be through a single worker decontamination system located at (designated location at the work site). All other means of access (Doors, windows, hallways, etc.) shall be blocked or locked so as to prevent entry to or exit from the work area. The only exceptions for this rule are the waste pass-out airlock which shall be sealed except during the removal of containerized asbestos waste from the work area, and emergency exits in the case of fire or accident. Emergency exits shall NOT be locked from the inside; however, they shall be sealed with polyethylene sheeting and tape until needed. Emergency exits shall have a sign and be clearly marked.

1.8.1.5 Contractors should have control of site security during abatement operations, in order to protect work efforts and equipment.

1.8.1.6 Contractor will have Owner's assistance in notifying building occupants of impending activity and enforcement of restricted access by Owner's employees.

1.9 Emergency Planning

1.9.1 Emergency planning shall be developed prior to abatement initiation and agreed to by Contractor and Owner.

1.9.1.1 Emergency procedures shall be in written form and prominently posted in the clean change area and equipment room of the worker decontamination area. Everyone, prior to entering the work area, must read and sign these procedures to acknowledge receipt and understanding of work site layout, location of emergency exits and emergency procedures.

1.9.1.2 Emergency planning shall include written notification for police, fire and emergency medical personnel of planned abatement activities, work schedule, and layout of work area, particularly that which may affect response capabilities.

1.9.1.3 Emergency planning shall include considerations of fire, explosion, toxic atmospheres, electrical hazards, slips, trips and falls, scaffolding, eye protection, confined spaces and heat related injury. Written procedures shall be developed and employee training in procedures shall be provided. Daily safety meetings in accordance with OSHA are the responsibility of the contractor.

1.9.1.4 Employees shall be trained in evacuation procedures in the event of workplace emergencies.

1.9.1.4 For non-life-threatening situations, employees injured or otherwise incapacitated shall decontaminate following normal procedures with assistance from fellow workers, if necessary, before exiting the workplace to obtain proper medical treatment.

1.9.1.5 For life-threatening injury or illness, worker decontamination shall take least priority after measures to stabilize the injured worker, remove him from the workplace and secure proper medical treatment.

1.9.1.6 Telephone numbers of all emergency response personnel shall be prominently posted in the clean change area and equipment room, along with the location of the nearest telephone.

1.9.1.7 There must be a telephone available for emergency use at all times. If the owner does not have one on site, the contractor must provide one at his expense.

1.10 Pre-Start Meeting

1.10.1 The successful Proposer shall attend a pre-start job meeting. Attending this meeting will be representatives of the Owner and the Owner's agents along with testing/monitoring personnel (e.g., Asbestos Project Manager, Air sampling Professional) who will actually participate in the Owner's testing/monitoring program.

1.10.1.1 The Contractor and supervisory personnel who will provide on-site direction of the abatement activities must attend.

1.10.1.2 At this meeting, the Contractor shall provide all submittals as required in Section 1.7. Failure to do this will result in the Contract being awarded to the next qualified Proposer. In addition, he shall be prepared to provide detailed information concerning:

1.10.1.3 Preparation of work area.

1.10.1.4 Personnel protective equipment including respiratory protection and protective clothing.

1.10.1.5 Employees who will participate in the project, including delineation of experience, training, and assigned responsibilities during the project.

1.10.1.6 Decontamination procedures for personnel, work area, and equipment.

1.10.1.7 Abatement methods and procedures to be utilized.

1.10.1.8 OSHA Required air monitoring procedures.

1.10.1.9 Procedures for handling and disposing of waste materials.

1.10.1.10 Procedures for final decontamination and cleanup.

1.10.1.11 A sequence of work and performance schedule.

1.10.1.12 Procedures for dealing with heat stress.

1.10.1.13 Emergency procedures.

1.10.1.14 Items that MUST be presented at the pre-start meeting are; Performance and Payment Bond, if required, Insurance Certifications as required in 1.1, asbestos workers certifications, medical physicals and required State license for those workers to work on this project only, logs documenting filter changes in respirators, HEPA vacuum and negative pressure ventilation units as required in 1.7, and work schedule. Failure to have this material ready at the pre-start meeting could result in the project being awarded to the next person who submitted a Bid.

1.10.1.15 The contractor shall submit the name of the project supervisor, **(THIS SUPERVISOR CANNOT BE REPLACED WITHOUT PRIOR NOTIFICATION AND APPROVAL OF THE PROJECT MANAGER)**. The project supervisor is to be present at all times and spend 25% of his time in containment. He is to see that there is someone to maintain the containment at all times. It is his responsibility to assure that all TDSHS, EPA, OSHA and the project specifications are followed at all times. He is to report any failure to do so to the Consultants Project Manager immediately.

PART 2 MATERIAL AND EQUIPMENT

2.1 Materials

2.1.1 General (All abatement projects)

2.1.1.1 Deliver all materials in the original packages, containers or bundles bearing the name of the manufacturer and the brand name.

2.1.1.2 Store all materials subject to damage off the ground away from wet or damp surfaces and under cover sufficient enough to prevent damage or contamination. Replacement materials shall be stored outside of the work area until abatement is completed.

2.1.1.3 Damaged, deteriorating or previously used materials shall not be used and shall be removed from the work site and disposed of properly.

2.1.1.4 Polyethylene sheeting for walls and stationary objects shall be a minimum of 4-mil thick. For floors and all other uses sheeting of at least 6-mil thickness shall be used in widths selected to minimize the frequency of joints. **All poly is to be fire retardant.**

2.1.1.5 Method of attaching polyethylene sheeting shall be agreed upon in advance by the Contractor and Building Owner and selected to minimize damage to equipment and surfaces. Method of attachment may include any combination of duct tape or other waterproof tape, furring strips, spray glue, staples, nails, screws, or other effective procedures capable of sealing polyethylene to dissimilar finished or unfinished surfaces under both wet and dry conditions (including the use of amended water).

2.1.1.6 Polyethylene sheeting utilized for worker decontamination enclosure shall be opaque white or black in color.

2.1.1.7 Sufficient protection should be placed under scaffold legs ladders or other equipment to prevent damage to any building components, equipment, or furnishings.
2.1.1.8 Disposal bags shall be of 6-mil polyethylene, pre- printed with labels as required by EPA regulation 40 CFR 61. 152 (b) (i) (iv) or OSHA requirement 29 CFR 1910.1001 (g) (2) (ii).
2.1.1.9 Disposal drums shall be metal or fiberboard with locking ring tops.
2.1.1.10 Stick-on labels as per EPA or OSHA requirements (see 2.1.1.8) for disposal drums, bags or wrapped ACM.
2.1.1.11 Warning signs and generator identification labels as required by TAHPR and OSHA.
2.1.2 Removal
2.1.2.1 Surfactant (wetting agent) shall be a 50/50 mixture of polyoxyethlyene ether and polyoxyethylene ester, or equivalent, mixed in a proportion of 1 fluid ounce to 5 gallons of water or as specified by manufacturer. (An equivalent surfactant shall be understood to mean a material with a surface tension of 29 dynes/cm as tested in its properly mixed concentration using ASTM method D1331-56- "Surface and Interfacial Tension of Solutions of Surface-Active Agents").
2.1.2.2 After removal, a lock down spray must be used to contain any fiber remaining imbedded in the substrate. Care must be taken to cover the entire work area completely.
2.1.2.3 Additional materials as necessary for removal, as specified in 2.1.2.

2.2 Equipment

2.2.1 General
2.2.1.1 A sufficient quantity of negative pressure ventilation units equipped with HEPA filtration and operated in accordance with ANSI 29.2.79 (local exhaust ventilation requirements) and EPA guidance document EPA 560/5-83-002 Guidance for controlling Friable Asbestos-Containing Materials in Building Appendix F: Recommended Specifications and Operating Procedures for the Use of Negative Pressure Systems for Asbestos Abatement shall be utilized so as to provide a minimum of one work place AIR CHANGE EVERY 15 MINUTES. A pressure differential of 0.02 in. H_2O as measured with a recording manometer.
To calculate total air flow requirement:
Total $ft.^3$ /min=Vol. of work area (in $ft.^3$)
To calculate the number of units needed for the abatement: Number of units needed= (total cu. ft./min.) (capacity of unit (use 80% of rated capacity)in cu. ft./min.).
If air-supplied respirators are utilized, estimate the volume of supplied air and add to workplace air volume when calculating ventilation requirements. For small enclosures and glove bags, a HEPA filtered vacuum system may be utilized to provide negative air pressure.
2.2.1.2 Type "C" air supplied respirators in positive pressure or pressure demand mode with full face piece and HEPA filtered disconnect protection are recommended by the U.S. EPA for all full shift abatement work until the successful completion of final clearance air monitoring. Powered air purifying respirators equipped with HEPA filters and full-face pieces of respirators with a higher NIOSH assigned protection factor may be used for inspection or repair work for less than 1 hour duration per day. A sufficient supply of charged replacement batteries and filters and a flow test meter shall be available in the clean change area for use with powered air purifying respirators. Half Mask respirators with dual high-efficiency (HEPA) filters may be utilized during work area preparation activities if approved by the Consultant. (See Section 3.4.1.2.) Spectacle kits and eyeglasses must be provided for employees who wear glasses and who must wear full-face piece respirators. Respirators shall be provided that have been tested and approved by the National Institute of Occupational Safety and Health for use in asbestos contaminated atmospheres with air volumes and pressures to accommodate respirator manufacturer's specifications. The compressed air systems shall have a receiver of adequate capacity to allow escape of all respirator wearers from contaminated areas in the event of compressor failure. Manufacturer approved emergency egress filters must be in place on each face piece. Compressors must meet the requirements of 29 CFR 1910.134 (d). Compressors must have an in-line carbon monoxide monitor and audible alarm and periodic inspection of the carbon monoxide monitor must be evidenced. Documentation of adequacy of compressed air systems/respiratory protection system must be retained on site. This documentation will include a list of compatible components with the maximum number and type of respirators that may be used with the system. Periodic testing of compressed air shall insure that systems provide air of sufficient quality (Grade D breathing air as described in Compressed Gas Association Commodity Specifications G-7.1).

2.2.1.3 Full body disposable protective clothing, including head, body and foot covering (unless using footwear as described in 2.2.1.5) consisting of material impenetrable by asbestos fibers (Tyvek R or equivalent) shall be provided to all workers and authorized visitors in sizes adequate to accommodate movement without tearing.

2.2.1.4 Additional safety equipment (e.g. hard hats, meeting the requirements of ANSI Standard Z89.1-1981, eye protection, meeting the requirements of ANSI Standard Z87.2-1979, safety shoes, meeting the requirement of ANSI Standard Z41.1-1067, disposable PVC gloves), as necessary shall be provided to all workers and authorized visitors.

2.2.1.5 Non-Skid footwear shall be provided to all abatement workers. Disposable clothing shall be adequately sealed to the footwear to prevent body contamination.

2.2.1.6 A sufficient supply of disposable mops, rags and sponges for work area decontamination shall be available.

2.2.2 Removal

2.2.2.1 A sufficient supply of scaffolds, ladders, lifts, and hand tools (e.g., scraper, wire cutters, brushes, utility knives, wire saws, etc.) shall be provided as needed. The use of all ladders and scaffolding must be in strict adherence with OSHA regulations.

Scaffolding:

The contractor is responsible for all scaffolding used on the project and for the training required by OSHA of all employees and the PM/AMT on the project. This includes all rolling towers, platform scaffolding, man lifts and all other ladders or scaffolding used on this project. The consultant accepts no responsibility or liability for the erection of any scaffolding, for the load limits of any scaffolding or for other safety issues involving any scaffolding or ladders used on this project. All scaffolding must be erected by scaffolding company that has been in business for a minimum of three years. All scaffolding that is erected is to be designed by a licensed engineer and a signed, stamped copy of his approval must be given to the building owner or his representative. **No work on the scaffolding may begin until this has been done.** The consultant shall be held harmless and indemnity against any accident or legal action resulting for this scaffolding.

2.2.2.2 Sprayers with pumps capable of providing 500 pounds per square inch (psi) at the nozzle tip at a flow rate of 2 gallons per minute for spraying amended water.

2.2.2.3 Rubber dustpans and rubber squeegees shall be provided for cleanup.

2.2.2.4 Brushes utilized for removing loose asbestos-containing materials shall have nylon or fiber bristles, not metal.

2.2.2.5 A sufficient supply of HEPA filtered vacuum systems shall be available during cleanup.

2.2.3 Enclosures

2..2.3.1 Hand tools equipped with HEPA filtered local exhaust ventilation shall be utilized during the installation of enclosures and supports if there is any need to disturb asbestos-containing materials during this process.

2.3 Substitutions

2.3.1 Approval Required:

2.3.1.1 The Contract is based on the materials, equipment and methods described in the Contract Documents.

2.3.1.2 The Building Owner will consider Bids for substitutions of materials, equipment, and methods only when such Bids are accompanied by full and complete technical data and all other information required by the Owner to evaluate the proposed substitution. Any substitution request is to be submitted through the Consultants Project Manager for approval.

2.3.1.3 Do not substitute materials, equipment, or methods unless such substitution has been specifically approved for this work by the Building Owner and Consultant.

2.3.2 " Or equal":

2.3.2.1 Where the phrase " or equal" or "or equal as approved by the Owner" occurs in the Contract Document, do not assume that materials, equipment, or methods will be approved by the Owner unless the item has been specifically approved for the work by the Owner and Consultant

2.3.2.2 The decision of the Owner or his representative shall be final.

PART 3 EXECUTION

3.1 Preparation

3.1.1 Work Area (**The contractor shall not work in more than one containment at a time without prior approval from the Consultant)**

3.1.1.1 Post signs meeting the specifications of TAHPR and OSHA in English and Spanish at any location and approaches to a location where airborne concentrations of asbestos may exceed ambient background levels. Signs shall be posted at a distance sufficiently far enough away from the work area to permit an employee to read the sign and take the necessary protective measures to avoid exposure. Additional signs may need to be posted following construction of workplace enclosure barriers. Asbestos caution tape must not be substituted for a warning sign.

3.1.1.2 Ensure safe installation (including ground faulting) of temporary power sources and equipment by compliance with all applicable electrical code requirements and OSHA requirements for temporary electrical systems. Contractor shall connect to existing Owner system using only licensed tradesmen and in accordance with all State and local regulations and building codes. All cost for electricity shall be paid for by the Owner unless otherwise specified. If Owners electrical source is inadequate, the Contractor shall provide alternate electrical power at the Contractor's expense. Tying in of contractors panel to existing electrical panel shall be done by a licensed electrical contractor and shall be paid for by the contractor.

3.1.1.3 Shut down and lock out and tag-out all heating, ventilation and air conditioning system (HVAC) components that are in, supply or pass through the work area. (Note: Interiors of existing ductwork may require decontamination. This may be done during the pre-cleaning phase of operations before the ductwork is sealed off or during the final cleaning phase prior to re-engagement of the system. Appropriate equipment and control measures shall be utilized to prevent contamination of building spaces during this operation. Adequate cleaning of ductwork may sometimes be accomplished by drawing high volumes of air through the system using the HEPA filtered negative pressure ventilation units) Investigate the work area and agree on pre-abatement condition with the Building Owner. Seal all intake and exhaust vents in the work area with tape and 6-mil polyethylene. Also seal any seams in system components that pass through the work area. Remove all HVAC filters and place them in labeled 6-mil polyethylene bags for staging and eventual disposal as asbestos-contaminated waste.

3.1.1.4 The Contractor shall provide sanitary facilities for abatement personnel outside of the enclosed work area and maintain them in a clean and sanitary condition throughout the project. If facilities are not available for use from the Owner, the Contractor shall provide temporary facilities at the Contractors expense. These facilities must meet OSHA's minimum standard.

3.1.1.5 The Owner will provide water for construction purposes. Contractor shall connect to existing Owner system using only licensed tradesmen and in accordance with all State and local regulations and building codes.

3.1.1.6 Pre-clean all movable objects within the work area using a HEPA filtered vacuum and/or wet cleaning methods as appropriate. After cleaning, these objects shall be removed from the work area and carefully stored in an uncontaminated location. (Carpeting, drapes, clothing, upholstered furniture, and other fabric items may be disposed of as asbestos contaminated waste or cleaned as asbestos contaminated items utilizing HEPA vacuum techniques and off- premises steam cleaning. Since adequate cleaning of severely contaminated fabric is difficult, the Building Owner or Consultant must carefully consider whether this option is appropriate. After abatement, all moved items are to be replaced in their original location.

3.1.1.7 Pre-clean all fixed objects in the work area using HEPA filtered vacuum and/or wet cleaning techniques as appropriate. Careful attention must be paid to machinery behind grills or gratings where access may be difficult. After pre-cleaning, enclose fixed objects in 4-mil polyethylene sheeting and seal securely in place with tape.

3.1.1.8 Pre-clean all surfaces in the work area using HEPA filtered vacuums and/or wet cleaning methods as appropriate. Do not use any methods that would raise dust such as dry sweeping or vacuuming with equipment not equipped with HEPA filters. Do not disturb asbestos-containing materials during the pre-cleaning phase.

3.1.1.8.1 Seal off all windows, doorways, elevator opening, corridor entrances, drains, ducts, grills, grates, diffusers skylights and any other openings between the work area and uncontaminated areas outside of the work area (including the outside of the building, tunnels and crawl spaces) with 6-mil polyethylene sheeting and tape (see Section 3.1.4-Isolation work area from occupied areas).

3.1.1.10 Cover floors in the work area with polyethylene.

3.1.1.10.1.1 Floor shall be covered with two layers of 6-mil (minimum) sheeting. Both layers shall extend up the wall a minimum of 12" under the wall poly. Additional layers of sheeting may be utilized as drop cloths to aid in cleanup of bulk materials. **All poly is to be fire retardant.**

3.1.1.10.2 Plastic shall be sized to minimize seams. If the floor area necessitates seams, those on successive layers of sheeting shall be staggered to reduce the potential for water to penetrate to the flooring material. Do NOT locate any seams at wall/floor joints.

3.1.1.10.3 Floor sheeting shall extend a minimum of 12" up the sidewalls of the work area.

3.1.1.10.3 Sheeting shall be installed in a fashion so as to prevent slippage between successive layers of material. (Vinyl sheeting may be used for improved traction on floors).

3.1.1.11 Walls shall be covered with a minimum of two layers of 4-mil polyethylene sheeting. **All poly is to be fire retardant.**

3.1.1.12 **For the removal of floor tile and or mastic, work shall be completed under full containment.**

3.1.1.12.1 Plastic shall be sized to minimize seams. Seams shall be staggered and separated by a distance of at least 6 feet.

3.1.1.12.2 Wall sheeting shall overlap floor sheeting by at least 12 inches beyond the wall/floor joint to provide a better seal against water damage and for negative pressure.

3.1.1.12.3 Wall sheeting shall be secured adequately to prevent it from falling away from the walls. This will require additional support attachment when negative pressure ventilation systems are utilized. (**Note: See Section 2.1.1.5.**)

3.1.1.12.4 Lower utilities as necessary and re-install in a manner which permits proper utilization and does not disturb the integrity of the enclosure. Utility maintenance should not require the enclosure to be opened or disturbed. (If it does, an alternative abatement strategy is indicated.)

3.1.2 Worker Decontamination Enclosure Systems

3.1.2.1 Worker decontamination enclosure systems shall be provided at all locations where workers will enter or exit the work area. One system at a single location for each contained work area is preferred. These systems may consist of existing rooms outside of the work area, if the layout is appropriate, that can be enclosed in plastic sheeting and are accessible from the work area. When this situation does not exist, enclosure systems may be constructed out of metal, wood, or plastic support as appropriate.

3.1.2.2 Plans for construction, including materials and layout, shall be submitted as shop drawings and approved, in writing or verbally by the Building Owner or his representative prior to work initiation. Worker decontamination enclosure systems constructed at the work site shall utilize 6-mil opaque black or white polyethylene sheeting or other acceptable materials for privacy.

3.1.2.3 The worker decontamination enclosure system shall consist of at least a clean room, a shower room, and an equipment room, each separated from each other and from the work area by airlock.

3.1.2.4 Entry to and exit from all airlocks and decontamination enclosure system chambers shall be through curtained doorways consisting of two sheets of overlapping polyethylene sheeting. One sheet shall be secured at the top and left side, the other sheet at the top and right side. Both sheets shall have weights attached to the bottom to ensure that they hang straight and maintain a seal over the doorway when not in use. Doorway design, providing equivalent protection and acceptable to the Building Owner, may be utilized.

3.1.2.5 Access between any two rooms in the decontamination enclosure system shall be through an airlock with at least 3 feet separating each curtained doorway. Pathways into (from clean to contaminated) and out from (contaminated to clean) the work area shall be clearly designated.

3.1.2.6 Clean-room shall be sized to adequately accommodate the work crew. Benches shall be provided as well as hooks for hanging up street clothes. (Lockers may be provided for valuables, however, workers may be requested to secure valuables in their cars) Shelves for storing respirators shall also be provided in this area. Clean disposable clothing, replacement filters for respirators, towels and other necessary items shall be provided in adequate supply at the clean room. A location for posting shall also be provided in this area. Whenever possible, a lockable door shall be used to permit access into the clean room from outside the work area. Lighting, heat, and electricity shall be provided as necessary for comfort. This space shall not be used for storage of tools, equipment, or materials, (except as specifically designated) or as office space.

3.1.2.7 Shower room shall contain showers sufficient to meet OSHA minimum standards. Each showerhead shall be supplied with hot and cold water adjustable at the tap. The shower enclosure shall be constructed to ensure against leakage of any kind. An adequate supply of soap, shampoo and towels shall be supplied by the Contractor and available at all times. Shower water shall be drained, collected, and filtered through a system with at least 5-micron particle size collection capability. (Note: A system containing a series of several filters with progressively smaller pore sizes is recommended to avoid rapid clogging of filtration system by large particles.

3.1.2.8 The equipment room shall be used for storage of equipment and tools at the end of a shift after they have been decontaminated using a HEPA filtered vacuum and/or wet cleaning techniques as appropriate. Replacement filters (in sealed containers until used) for HEPA vacuums and negative pressure ventilation equipment, extra tools, containers of surfactant and other materials and equipment that may be required during the abatement may also be stored here as needed. A drum lined with a labeled 6-mil polyethylene bag for collection of disposable clothing shall be located in this room. Contaminated footwear (e.g., rubber boots, other reusable footwear) shall be stored in this area for reuse the following workday.

3.1.3 Waste container pass-out or bag-out airlock is required on all projects where it is possible in
addition to emergency exits. The Waste Container pass out may serve as an emergency exit.

3.1.3.1 The waste container pass-out airlock shall be constructed at some location away from the worker decontamination enclosure system. Wherever possible, this shall be located where there is direct access from the work area to the outside of the building.

3.1.3.2 This airlock system shall consist of an airlock, a container staging area, and another airlock with access to outside the work area.

3.1.3.3 The waste container pass-out airlock shall be constructed in similar fashion to the worker decontamination enclosure system using materials and airlock and curtain doorway design.

3.1.3.4 This airlock system SHALL NOT be used to enter or exit the work site.

3.1.3.5 Emergency exits shall be established and clearly marked with duct tape arrows or other effective designations to permit easy location from anywhere within the work area. They shall be secured to prevent access from uncontaminated areas and still permit emergency exiting. These exits shall be properly sealed with polyethylene sheeting which can be cut to permit egress if needed. These exits may be the worker decontamination enclosure, the waste pass-out airlock and/or other alternative exits satisfactory to fire officials.

3.1.4 Barriers and Isolation of the Work Area.

3.1.4.1 The contaminated work area shall be separated from uncontaminated occupied areas of the building by the construction of airtight barriers. (Building Owner must clearly identify all areas that will be occupied.)

3.1.4.2 Walls shall be constructed of wood or metal framing to support barriers in all openings larger than 4'x8'.

3.1.4.3 A sheeting material (plywood, drywall) of at least 3/8" thickness shall be applied to work side of barrier.

3.1.4.4 Cover both sides of partition with a double layer of 6-mil polyethylene sheeting with staggered joints and seal in place.

3.1.4.5 Caulk edges of partition at floor, ceiling, walls, and fixtures to form an airtight seal.

3.1.5 Maintenance of workplace barriers and worker decontamination enclosure systems.

3.1.5.1 Following completion of the construction of all polyethylene barriers and decontamination system enclosures, allow overnight settling to ensure that barriers will remain intact and secured to walls and fixtures before beginning actual abatement activities. No abatement work may begin until approval of the containment has been received from the project manager. No work may be performed unless the project manager has been notified and is on site.

3.1.5.2 All polyethylene barriers inside the work place, in the worker decontamination enclosure system, in the waste container pass-out airlock and at partitions constructed to isolate the work area from occupied area shall be inspected at least twice daily, prior to the start of each day's abatement activities and following the completion of the day's abatement activities. Document inspections and observations in the daily project log.

3.1.5.3 Damage and defects in the enclosure system are to be repaired immediately upon discovery.

3.1.5.4 Use smoke tubes to test the effectiveness of the barrier system when directed by Building Owner.

3.1.5.5 At any time during the abatement activities after barriers have been erected, if visible material is observed outside of the work area or if damage occurs to barriers, work shall immediately stop, repairs be made to barriers, and debris/residue cleaned up using appropriate HEPA vacuuming and wet mopping procedures.

3.1.5.6 If air samples collected outside of the work area during abatement activities indicate airborne fiber concentrations 0.01 f/cc or greater, or per-measured background levels (which is lower) work shall immediately stop for inspection and repair of barriers. Cleanup of surfaces outside of the work area using HEPA vacuum or wet cleaning techniques may be necessary.

3.1.5.7 Install and initiate operation of air filtration equipment as needed to provide one air change in the work area every 15 minutes. (See Section 2.2.1.1) Enough exhaust air must be vented through a HEPA filter to maintain a lower air pressure within the enclosure system than the outside air pressure. Openings made in the enclosure system to accommodate these units shall be made airtight with tape and/or caulking as needed. If more than one unit is vented to the outside, they should be turned on 1 at a time, checking the integrity of wall barriers for secure attachments and need for additional reinforcements. Ensure that adequate power supply is available to satisfy the requirements of the air filtration equipment. Air filtration equipment shall be exhausted to the outside of the building wherever feasible. They shall not be exhausted into occupied areas of the building. Twelve-inch expansion duct shall be used to reach from the work area to the outside when required. Careful installation, air monitoring, and daily inspections shall be done to ensure that the duct does not release fibers into uncontaminated building areas.

3.1.6 Establishing Emergency Exits

3.1.6.1 Emergency exits shall be established and clearly marked with duct tape arrows or other effective designations to permit easy location from anywhere within the work area. They shall be secured to prevent access from uncontaminated areas and still permit emergency exiting. These exits shall be properly sealed with polyethylene sheeting which can be cut to permit egress if needed. These exits may be the worker decontamination enclosure, the waste pass-out airlock and/or other alternative exits satisfactory to fire officials.

3.1.7 Removing and Cleaning Fixtures

3.1.7.1 Remove, clean, and enclose in polyethylene the ceiling mounted objects such as lights and other items that may interfere with the abatement process and were not previously cleaned and sealed off. Utilize localized spraying of amended water and/or HEPA vacuum to reduce fiber dispersal during the removal of these fixtures.

3.1.8 Removal of building structural components, not used.

3.1.8.1 All building structural components that can be removed are to be cleaned and moved to a secure storage area prior to abatement. After abatement is complete all components are to be replaced in original location and condition.

3.1.9 Commencement of work shall not occur until:

3.1.9.1 No abatement work is to start until the Owners Project Manager has given his approval and all of section 3.1.10 has been completed. In addition, no work shall be performed without first notifying the consultants project manager that work is about to commence. No work may be performed unless the consultant's project manager is on site.

3.1.10 Enclosure systems approval

3.1.10.1 Negative pressure ventilation systems are functioning adequately, and negative pressure is a minimum .02-inch water column on the manometer.

3.1.10.2 All pre-abatement submissions, notification, posting and permits have been provided and are satisfactory to the Building Owner (see Section 1.7).

3.1.10.3 All equipment for abatement, clean-up and disposal are on hand.

3.1.10.4 All worker training (and certification) is completed.

3.1.10.5 Contractor receives written permission from Building Owner or his Representative to commence abatement.

3.1.11 Alternative Procedures

3.1.11.1 Procedures described in this specification are to be utilized at all times.

3.1.11.2 If specified procedures cannot be utilized, a request must be made in writing to the Building Owner providing details of the problem encountered and recommended alternatives.

3.1.11.3 Alternative procedures shall provide equivalent or greater protection than procedures that they replace.

3.1.11.4 Any alternative procedure must be approved in writing by the Building Owner prior to implementation.

3.2 Workplace Entry and Exit Procedures

3.2.1 Personnel entry and exit.

3.2.1.1 All workers and authorized personnel shall enter the work area through the worker decontamination enclosure system.

3.2.1.2 All personnel who enter the work area must sign the entry log, located in the clean room, upon entry and exit.

3.2.1.3 Before entering the work area, all personnel shall read and be familiar with all posted regulations, personal protection requirements (including workplace entry and exit procedures) and emergency procedures. A sign-off sheet shall be used to acknowledge that these have been reviewed and understood by all personnel prior to entry.

3.2.1.4 All personnel shall proceed first to the clean room, remove all street clothes, and appropriately don respiratory protection (as deemed adequate for the job condition). And washable and/or disposable coveralls, head covering and foot covering. Hard hats, eye protection, and gloves shall also be utilized if required. Clean respirators and protective clothing shall be provided and utilized by each person for EACH SEPARATE ENTRY into the work area.

3.2.1.5 Personnel wearing designated personal protective equipment shall proceed from the clean room through the shower room and equipment room to the main work area.

3.2.1.6 Before leaving the work area all personnel shall remove gross contamination from the outside of respirators and protective clothing by brushing and/or wet wiping procedures. (Small HEPA vacuums with brush attachments may be utilized for this purpose, however, larger machines may tear the suits) Each person shall clean bottoms of protective footwear in the walk-off pan just prior to entering the equipment room.

3.2.1.7 Personnel shall proceed to equipment room where they remove all protective equipment except respirators. Deposit disposable (and washable) clothing into appropriately labeled containers for disposal (and laundering).

3.2.1.8 Reusable, contaminated footwear shall be stored in the equipment room when not in use in the work area. Upon completion of abatement, it shall be disposed of as asbestos contaminated waste. (Rubber boots may be decontaminated at the completion of the abatement for reuse.)

3.2.1.9 Still wearing respirators, personnel shall proceed to the shower area, clean the outside of the respirators and the face area under running water prior to removal of respirator and shower and shampoo to remove residual asbestos contamination. Various types of respirators will require slight modification of these procedures. An airline respirator with HEPA filtered disconnect protection may be disconnected in the equipment room and worn into the shower. A powered air-purifying respirator face-piece will have to be disconnected from the filter/power pack assembly, which is not waterproof, upon entering the shower. A dual cartridge respirator may be worn into the shower. Cartridges must be replaced for each new entry into the work area.

3.2.1.10 After showering and drying off, proceed to the clean room and don clean disposable (and/or washable) clothing if there will be later re-entry into the work area or street clothes if it is the end of the work shift.

3.2.1.11 These procedures shall be posted in the clean room and equipment room.
3.2.2 Waste container pass-out procedures.
3.2.2.1 Asbestos contaminated waste that has been containerized shall be transported out of the work area through the waste container pass-out airlock (or through the worker decontamination enclosure if a separate airlock has not been constructed).
3.2.2.2 Waste pass-out procedures shall utilize two teams of workers, an "inside" team and an "outside" team.
3.2.2.3 The inside team wearing appropriate protective clothing and respirators for inside the work area shall clean the outside, including bottom, of properly labeled containers (bags, drums, or wrapped components) using HEPA vacuum and wet wiping techniques and transport them into the waste container pass-out airlock. No worker from the inside team shall further exit the work area through this airlock.
3.2.2.4 The outside team wearing protective clothing and appropriately assigned respirators shall enter the airlock FROM OUTSIDE THE WORK AREA, enclose the drums in clean, labeled 6 mil polyethylene bags and remove them from the airlock to the outside. No worker from the outside team shall further enter the work area through this airlock.
3.2.2.5 The exit from this airlock shall be secured to prevent unauthorized entry.

3.3 Training

3.3.1 Prior to commencement of abatement activities all personnel who will be required to enter the work area or handle containerized asbestos containing materials must have received adequate training required by the Texas Department of State Health Services. All personnel on the job site that enter the containment must have Texas licenses in hand (See Part 4, Section 4.1, Training)
3.3.1.1 Special on-site training on equipment and procedures unique to this job site shall be performed as required.
3.3.1.2 Training in emergency response and evacuation procedures shall be provided.

3.4 Respiratory Protection

3.4.1 All respiratory protection shall be provided to workers in accordance with the submitted written respiratory protection program, which includes all items in OSHA 29 CRF 1910.134 (b) (1-11). This program shall be posted in the clean room of the worker decontamination enclosure system.
3.4.1.1 Workers shall be provided with personally issued, individually identified (marked with waterproof designations) respirators.
3.4.1.2 Respirators shall be selected that meet the following level of protection requirements: All workers, foremen, superintendents, authorized visitors, and inspectors must have personally issued and marked equipment approved by NIOSH or MSA. Minimum respiratory protection required for this project must meet the requirement levels for the fiber concentration as determined by the personal samples and/or area samples. Prep work must be conducted using ½ face respirators with dual filter HEPA cartridges where there is a possibility of exposure to asbestos fibers. It is the responsibility of the contractor to furnish all personnel with respirators in accordance with the OSHA requirements as listed above. If there is any doubt as the protection needed the respirator used should be adequate to meet the maximum anticipated concentration. It is the contractor's responsibility to meet or exceed the required respiratory protection at all times.
3.4.1.3 Fit testing
3.4.1.4 Workers must perform positive and negative air pressure fit tests each time a respirator is put on, whenever the respirator design permits. Powered air- purifying respirators shall be tested for adequate flow as specified by the manufacturer.
3.4.1.5 Workers shall be given a qualitative fit test in accordance with procedures detailed in the OSHA lead Standard (29 CFR 1910.1025,Appendix D Qualitative Fit Test Protocols) for all respirators to be used on this abatement project. An appropriately administered quantitative fit test may be substituted for the qualitative fit test.
3.4.1.6 Documentation of adequate respirator fit must be provided to the Building Owner.
3.4.1.7 No one wearing a beard shall be permitted to don a respirator and enter the work area.
3.4.1.8 Additional respirators (minimum of 2 of each type) and training on their donning and use must be available at the work site for authorized visitors who may be required to enter the work area.

3.5 Protective Clothing.

3.5.1 Disposable clothing including head, foot and full body protection shall be provided in sufficient quantities and adequate sizes for all workers and authorized visitors.

3.5.1.1 Hard hats, protective eye wear, gloves, rubber boots, and/or other footwear shall be provided as required for workers and authorized visitors. Safety shoes may be required for some activities.

3.6 Removal Procedures.

3.6.1 Clean and isolate the work area in accordance with Section 3.1

3.6.1.1 Wet all asbestos containing material with an amended water solution using equipment capable of providing a fine spray mist, in order to reduce airborne fiber concentrations when the material is disturbed. Saturate the material to the substrate, however, do not allow excessive water to accumulate in the work area. Keep all removed material wet enough to prevent fiber release until it can be containerized for disposal. If work area temperatures are below 32 F and amended water is subject to freezing, dry removal permits and procedures must be utilized (See 2.1.2.1) Maintain a high humidity in the work area by misting or spraying to assist in fiber settling and reduce airborne concentrations. Wetting procedures are not equally effective on all types of asbestos containing materials but shall be used in all cases.

3.6.1.2 Special circumstances (e.g., live electrical equipment, high amosite content of material, materials previously coated with an encapsulant or paint) may prohibit the adequate use of wet methods to reduce fiber concentrations. For these situations, a dry removal may be required. The Contractor will have to acquire special permits, different from those mentioned herein from the NESHAP enforcement agency.

3.6.1.3 Saturated asbestos containing material shall be removed in manageable sections. Removed material should be containerized before moving to a new location for continuance of work. Surrounding areas shall be periodically sprayed and maintained in a wet condition until visible material is cleaned up.

3.6.1.4 Material removed from building structures or components shall not be dropped or thrown to the floor. Material should be removed as intact sections or components whenever possible and carefully lowered to the floor. If this cannot be done for materials greater than 50 feet above the floor, a dust-tight chute shall be constructed to transport the material to containers on the floor or the material may be containerized at elevated levels (e.g., on scaffolds) and carefully lowered to the ground by mechanical means. For materials between 15 and 50 feet above the ground they may be containerized at elevated levels or dropped onto inclined chutes or scaffolding for subsequent collection and containerization.

3.6.1.5 Containers (6 mil polyethylene bags or drums) shall be sealed when full (Wet material can be exceedingly heavy.) Bags shall not be over-filled. They should be securely sealed to prevent accidental opening and leakage by tying tops of bags in an overhand knot or by taping in gooseneck fashion. Do not seal bags with wire or cord. (Bags may be placed in drums for staging and transportation to the landfill. Bags shall be decontaminated on exterior surfaces by wet cleaning and HEPA vacuuming before being placed in clean drums and sealed with locking ring tops).

3.6.1.6 Large components removed intact may be wrapped in 2 layers of 6 mil polyethylene sheeting secured with tape for transport to the landfill. If wrapped in this manner they shall have the proper label.

3.6.1.7 Asbestos containing waste with sharp-edged components (e.g., nail, screws, metal lath, tin sheeting) will tear the polyethylene bags and sheeting and shall be placed in drums for disposal.

3.6.1.8 After completion of all stripping work, surfaces from which asbestos containing materials have been removed shall be wet brushed and sponged or cleaned by some equivalent method to remove all visible residue.

3.7 Clean-up Procedure

3.7.1 Remove and containerize all visible accumulations of asbestos containing material and asbestos contaminated debris utilizing rubber dustpans and rubber squeegees to move material around. DO NOT use metal shovels to pick up or move accumulated waste. Special care shall be taken to minimize damage to floor sheeting.

3.7.1.1 Wet clean all surfaces in the work area using rags, mops, and sponges as appropriate.

3.7.1.2 Remove the cleaned outer layer of plastic sheeting from walls and floors, windows, and doors. HVAC system vents and all other openings shall remain sealed. The negative pressure ventilation units shall remain in continuous operation. Decontamination enclosure systems shall remain in place and be utilized.

3.7.1.3 After cleaning the work area, HEPA vacuum and wet clean all objects and surfaces in the work area again.

3.7.1.4 Remove all containerized waste from the work area and waste container pass-out airlock.

3.7.1.5 Decontaminate all tools and equipment and remove them at the appropriate time in the cleaning sequence.

3.7.1.6 Inspect the work area for visible residue. If any accumulation of residue is observed, it will be assumed to be asbestos and the 24-hour settling period/cleaning cycle repeated.

3.7.1.7 The work area shall be cleaned until it is in compliance with State and Local requirements and any more stringent criteria agreed upon by the Contractor and Owner prior to initiation of abatement activities. Additional cleaning cycles shall be provided, as necessary, at no cost to the Building Owner until these criteria have been met.

3.7.1.8 Following the satisfactory completion of clearance air monitoring, remaining barriers may be removed and properly disposed of. A final visual inspection by the Owner's representative shall insure that no contamination remains in the work area. Unsatisfactory conditions may require additional cleaning and air monitoring. (See Section 3.10 Re-establishment of the Work Area)

3.8 Lock-Down

3.8.1 After final inspection in accordance with 3.9.

3.8.1.1 Repair damaged and missing areas of existing (sprayed) (troweled) materials with non-asbestos containing substitutes(specify) Material must adhere adequately to existing surfaces and provide an adequate base for application of encapsulating agents. Filler material shall be applied in accordance with manufacturer's recommended specifications.

3.8.1.2 Remove loose or hanging asbestos containing materials in accordance with the requirements of Section 3.6.

3.8.1.3 After the work area has been rendered free of visible residues by the Project Manager/Air monitor technician and final approval given, a thin coat of satisfactory lock-down agent shall be applied to all surfaces in the work area including structural members, building components and plastic sheeting on walls, floors, and covering non-removable items, to seal in non-visible residue.

3.8.1.4 **The flash point for the lock-down must be 140 degrees or higher.**

3.8.1.5 If a mastic remover is used it must be compatible and applicable to the space, occupancy and future occupancy and use and must not have a flash point of greater than 140 degrees.

3.9 Final Inspection and Clearance Air Monitoring

3.9.1 Final Inspection

3.9.1.1 Enter all spaces for the purpose of inspecting the work prior to lock down in all areas where asbestos abatement was performed in order to inspect the work at close range. Get close enough to touch the surface from which ACM was removed, or on which other abatement operations were performed. It is important that all areas of abatement be accessed and inspected. Should this inspection uncover that the work area is in fact not ready for lock down and final clearance samples, the inspection should be suspended until the area has been additionally cleaned.

3.9.1.2 The contractor supervisor must always accompany the inspection during this inspection. A worker with cleaning tools and/or HEPA vacuum should also accompany this inspection so that minor items may be cleaned immediately. Should this additional cleaning prove to be in excess the inspection should be suspended until additional cleaning has been done and the job supervisor has requested another final visual.

3.9.1.3 Inspect all surfaces from which ACM has been removed for completeness of removal. Thorough inspection for the presence of residue is essential. The surface from which ACM was removed should be touched and brushed for the purpose of dislodging any ACM debris that may not be visible. Should this brushing cause the release of residue or the visibility of airborne residue, the surface brushed should be re-cleaned. This process can be greatly enhanced by using a narrow beam flashlight during the inspection. Unless the lighting is very good a flashlight should always be used. To obtain the best results when using a flashlight while brushing the abated surface it should be held parallel to the abated surfaces. The room light should be minimized during this type of inspection to enhance the effects of the flashlight. The surface should also be rubbed by hand to assure its cleanliness.

3.9.1.4 Pay special attention to areas that are difficult to reach or to see. Use a small screwdriver for poking into places such as the spaces between steel beams and the roof or ceiling frames or air duct flanges. Give special care to elbows, valves, and tees on the mechanical system.

3.9.1.5 No lock-down is to be applied until this inspection is complete and the inspector has given the approval for lock-down. After the lock-down is applied the area should be reinspected to assure that all surfaces have been completely coated with the lock-down.

3.9.1.6 Should the abatement of any areas not include the complete removal of all ACM the remaining ACM must be inspected to assure that there are no damaged areas. This inspection must assure that there will be no fiber release from this material if left undisturbed.

3.9.2 Clearance Air Monitoring

3.9.2.1 Following the completion of clean-up operations, and after inspection by the project manager and the project supervisor, final samples shall be taken as set forth by the AHERA guidelines. The project manager has the express permission of the Consultant to conduct the final clearance inspection and sampling.

3.9.2.2 Permission for this final visual and for the final air samples is given to the project manager for this project.

3.9.2.3 Samples shall be taken following E.P.A. guidelines. Negative pressure ventilation units shall NOT be shut down until final clearance is achieved.

3.9.2.4 Final air samples shall be analyzed **as per section 1.4.2.4.10** . Should the first set fail the contractor will completely re-clean the area and a second set of finals will be taken. The cost of these additional samples will be paid for by the contractor.

3.9.2.5 All samples at all locations shall indicate concentrations of airborne fibers less than or equal to the requirements as set forth in the AHERA regulations.

3.9.2.6 Aggressive sampling shall be performed with portable fans circulating air in the work area to simulate actual use conditions. Negative pressure ventilation units shall NOT be utilized for this purpose.

3.9.2.7 Final air samples shall be analyzed **as per section 1.4.2.4.10** , samples taken during the course of the project as well as background samples will be analyzed by PCM.

3.9.2.8 All samples at all locations shall indicate concentrations of airborne fibers less than 0.01 f/cc for release of the work area.

3.9.2.9 Areas exceeding this level shall be re-cleaned using procedures in Section 3.7 and re-tested until satisfactory levels are obtained.

3.9.2.9 Cost of re-testing shall be borne by the Contractor.

3.10 Disposal Procedures

3.10.1 As the work progresses, to prevent exceeding available storage capacity on site, sealed and labeled containers of asbestos containing waste shall be removed and transported to the pre-arranged disposal location.

3.10.1.1 Disposal must occur at an authorized site in accordance with regulatory requirements of NESHAP and applicable State and Local guidelines and regulations.

3.10.1.2 All dump receipts, trip tickets, transportation manifests, or other documentation of disposal shall be delivered to the Building Owner for his records. A recommended record-keeping format utilizes a chain of custody form, which includes the names, and addresses of the Generator (Building Owner), Contractor, pickup site, and disposal site, the estimated quantity of the asbestos waste and the type of containers used. The form should be signed by the Generator, the Contractor, and the Disposal Site Operator, as the responsibility for the material changes hands. If a separate hauler is employed, his name, address, telephone number, and signature should also appear on the form.

3.11 Transportation to the landfill

3.11.1 Once drums, bags and wrapped components have been removed from the work area, they shall be loaded into an ENCLOSED truck or dumpster for transportation. At no time is the asbestos waste to be stored in anything that is not enclosed and lockable. All dumpsters must be enclosed.

3.11.1.1 When moving containers, utilize hand trucks, carts, and proper lifting techniques to avoid back injuries. Trucks with lift gates are helpful for raising drums during truck loading.

3.11.1.2 The enclosed cargo area of the truck shall be free of debris and lined with 6-mil polyethylene sheeting to prevent contamination from leaking or spilled containers. Floor sheeting shall be installed first and extended up the side walls. Wall sheeting shall be overlapped and taped into place.

3.11.1.3 Drums shall be placed on level surfaces in the cargo area and packed tightly together to prevent shifting and tipping. Large structural components shall be secured to prevent shifting and bags placed on top. Do not throw containers into truck cargo area.

3.11.1.4 Personnel loading asbestos waste shall be protected by disposable clothing including head, body, and foot protection and, at a minimum, half face piece, air purifying dual cartridge respirators equipped with high efficiency filters.

3.11.1.5 Any debris or residue observed on containers or surface outside of the work area resulting from clean-up or disposal activities shall be immediately cleaned-up using HEPA filtered vacuum equipment and/or wet methods as appropriate.

3.11.1.6 Large metal dumpsters are sometimes used for asbestos waste disposal. These should have doors or tops that can be closed and locked to prevent vandalism or other disturbance of the bagged asbestos debris and wind dispersion of asbestos fibers. Un-bagged material shall not be placed in these containers, nor shall it be used for non- asbestos waste. Bags shall be placed, not thrown into containers to avoid splitting.

3.11.2 Before the waste leaves the owner's site it must have a waste manifest properly filled out and signed by the owner or his representative. The contractor must then make sure that the owner's copy is given to the individual signing the waste manifest.

3.12 Disposal at the landfill

3.12.1 Prior to unloading, the waste manifest is to be presented to the landfill operator for signing. After signing, the landfill operator must send the original copy of the waste manifest to the owner.

3.12.2 Upon reaching the landfill, trucks are to approach the dump location as closely as possible for unloading of the asbestos containing waste.

3.12.2.1 Bags, drums, and components shall be inspected as they are off-loaded at the disposal site. Material in damaged containers shall be re-packed into empty drums or bags, as necessary. (Local requirements may not allow the disposal of asbestos waste in drums. Check with appropriate agency and institutions for appropriate alternative procedures.)

3.12.2.2 All bags must be a true six mil.

3.12.2.3 Waste containers shall be PLACED on the ground at the disposal site, not pushed or thrown out of trucks (weight of wet material could rupture containers).

3.12.2.4 Personnel off-loading containers at the disposal site shall wear protective equipment consisting of disposable head, body, and foot protection and, at a minimum, half-face piece, air purifying dual cartridge respirators equipped with high efficiency filters.

3.12.2.5 Following the removal of all containerized waste, the truck cargo area shall be decontaminated using HEPA vacuums and/or wet methods to meet the no visible residue criteria. Polyethylene sheeting shall be removed and discarded along with contaminated cleaning materials and protective clothing, in bags or drums at the disposal site.

3.12.2.6 If landfill personnel have not been provided with personal protective equipment for the compaction operation by the landfill operator Contractor shall supply protective clothing and respiratory protection for the duration of this operation.

3.13 Re-establishment of the Work Area and Systems

3.13.1 Re-establishment of the work area shall only occur following the completion of clean-up procedures and after clearance air monitoring has been performed and documented to the satisfaction of the Building Owner.

3.13.1.1 Polyethylene barriers shall be removed from walls and floors at this time, maintaining decontamination enclosure systems and barriers over doors, windows, etc. as required.

3.13.1.2 The Contractor and Owner shall visually inspect the work area for any remaining visible residue. Evidence of contamination will necessitate additional cleaning requirements in accordance with Section 3.7.

3.13.1.3 Additional air monitoring shall be performed in accordance with Section 3.9 if additional clean-up is necessary.

3.13.1.4 Following satisfactory clearance of the work area, remaining polyethylene barriers may be removed and disposed of as asbestos contaminated waste.

3.13.1.5 At the discretion of the Contractor, mandatory requirement for personal protective equipment may be waived following the removal of all barriers.

3.13.1.6 Re-secure mounted objects removed from their former positions during area preparation activities.

3.13.1.7 Relocate objects that were removed to temporary locations back to their original positions.

3.13.1.8 Re-establish HVAC, mechanical and electrical systems in proper working order. Remove contaminated HVAC system filters and dispose of as asbestos contaminated waste. Decontaminate filter assembly using HEPA vacuums and wet cleaning techniques. Install new filters in HVAC systems. Dispose of old filters.

3.14 Repair

3.14.1 Repair all areas of damage that occurred as a result of abatement activities.

PART 4: SUPPORT ACTIVITIES AND PERSONNEL

4.1 Training

4.1.1 Training shall be provided by the contractor to all employees or agents who may be required to disturb asbestos containing or asbestos contaminated materials for abatement and auxiliary purposes and to all supervisory personnel who may be involved in planning, execution, or inspection of abatement projects.

4.1.1.1 All workers must have a minimum of 24 hours of training as required by the EPA, OSHA, NIOSH, and any state requirements, such as additional training and license.

4.1.1.2 All workers must have received the required medical examination.

4.1.1.3 All workers must be trained in the proper use of the type of respirators used on this job.

4.1.1.4 Personal hygiene including entry and exit procedures for the work area, use of showers and prohibition of eating, drinking, smoking, and chewing in the work area.

4.1.1.5 Special safety hazards that may be encountered including electrical hazards, air contaminants, wetting agents, encapsulants, materials from Owner's operation, fire and explosion hazards, scaffold and ladder hazards, slippery surfaces, confined spaces, heat stress, and noise.

4.1.1.6 Workshops affording both supervisory personnel and abatement workers the opportunity to see the construction of containment barriers and decontamination facilities.

4.1.1.7 Supervisory personnel shall, in addition, receive training or contract specifications, liability insurance and bonding, legal considerations related to abatement, establishing respiratory protection medical surveillance programs, EPA, OSHA (and State) record keeping requirements and other topics as requested by the Building Owner.

4.1.1.8 Training must be provided by individuals qualified by virtue of experience and education to discuss the topic areas in 4.2.

4.1.1.9 Training is to have occurred within 12 months prior to the initiation of abatement activities.

4.1.1.10 Contractor must document training by providing date of training, training entity, course outline, and names and qualifications of trainers.

4.2 Medical Monitoring.

4.2.1 Medical Monitoring must be provided by the Contractor to any employee or agent that may be exposed to asbestos in excess of background levels during any phase of the abatement project. (Due to the synergistic effect between smoking and asbestos exposure, it is highly recommended that only non-smokers be employed in positions which may require them to enter asbestos contaminated atmospheres).

4.2.1.1 Medical monitoring shall include at a minimum:

4.2.1.2 A work/medical history to elicit symptomatology of respiratory disease.

4.2.1.3 A chest x-ray (posterior-anterior, 14x13 inches) evaluated by a certified B-reader.

4.3 Safety

4.3.1 PPE – All personal protective equipment must be properly maintained and cleaned. A record of all maintenance and cleaning must be kept and available for verification.

4.3.2 Potable water – There must be potable water available for the workers. It must be dispensed from a tap and there must be disposable cups available.

4.3.3 Toilets – There must be sufficient toilet facilities to meet OSHA's minimum requirements.

4.3.4 Illumination – There must be sufficient lighting to meet OSHA's minimum requirements.

4.3.5 Haz-Com – There must be a Hazardous Communications Program on the project with proof of employee acknowledgment of this program.

4.3.6 Fire Extinguishers – There must be sufficient fire extinguishers to meet OSHA's minimum requirements.

4.3.7 Air Flow – If any electrical or other equipment must be left operational inside the containment it must:

A. Be isolated from the contained work area with its own access that is completely separate from the work area.

B. Sufficient airflow must be maintained to assure proper operation for the duration of the project.

4.3.8 Electrical – All electrical must be locked out and tagged out when possible. In addition, all electrical within the containment must be checked by a competent person.

4.3.9 Fall Protection – Fall protection must be provided to meet OSHA's minimum requirements.

4.3.10 Scaffold – All scaffolding must meet OSHA's minimum requirements and.

A. Must have a competent person as defined by OSHA on all projects where scaffolding is erected.

B. All scaffold erection must be designed by a professional engineer, and after creation must be inspected by this professional engineer.

C. All workers must be trained on scaffold safety as per OSHA requirements.

4.3.11 Flash Point – No material may be used with a flash point less than 140 degrees.

5. Post-Job Submittals

5.1 Post –Job Submittal Requirements

5.1.1 A copy of all contactor field notes and logs, dated and signed by the supervisor, describing work performed each shift of each day, including the work practices and procedures used.

5.1.2 Copies of the Daily Sign In/Out Log showing the following: job name, date, printed name, signature, TDSHS license number, entry and departure times, type of respiratory protection used, company or agency represented and reason for entry for all persons entering the Regulated Area.

5.1.3 Copies of worker air monitoring results relative to OSHA respiratory protections laws.

5.1.4 Copies of all workers and supervisor's certification and licenses.

5.1.5 Copy of the waste manifest that was filled out prior to removal of waste to the landfill. It is the contractor's responsibility to assure that the landfill forwards a copy of the waste manifest that they have signed to the owner.

King Consultants Environmental

SPECIFICATION SITE MAP
CARVER LEARNING CENTER
301 WEST 9TH STREET
SAN ANGELO, TX 76903

KC 26-01-11

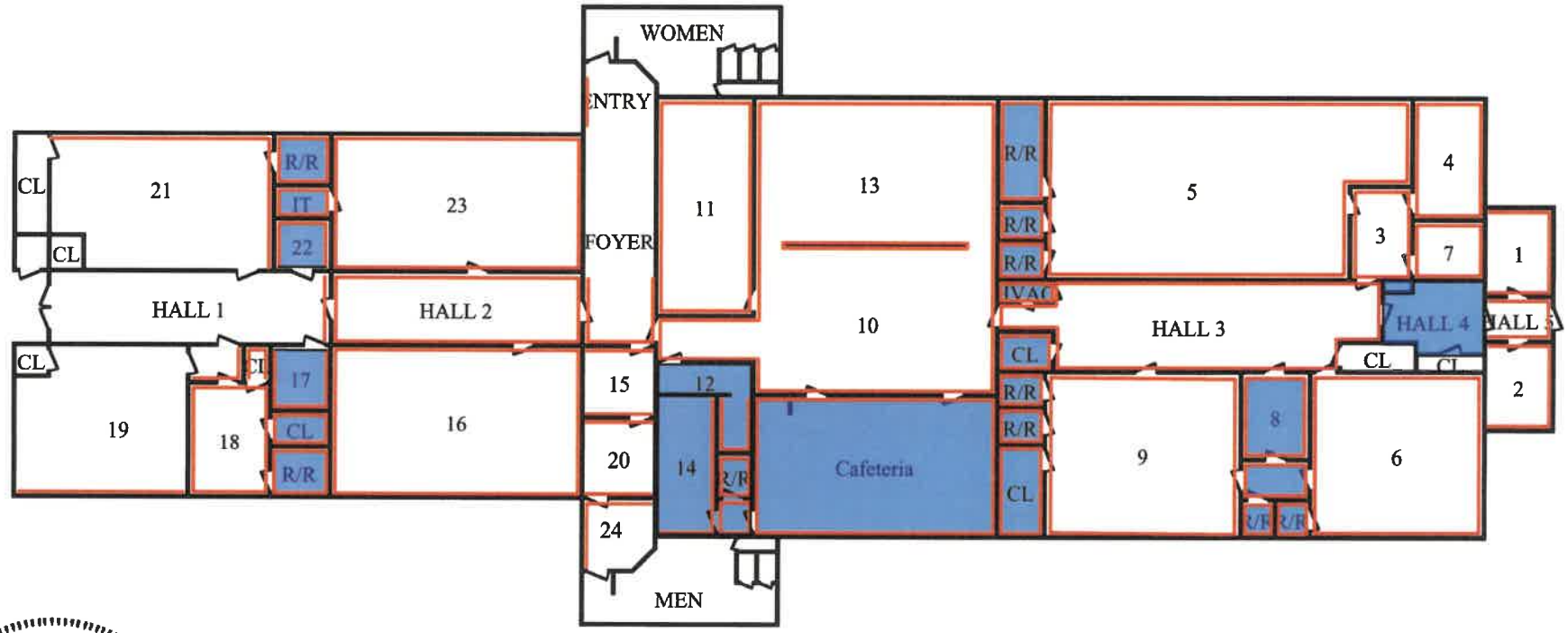

=SHEETROCK/JOINT COMPOUND/TEXTURE WALL TO BE REMOVED

=SHEETROCK/JOINT COMPOUND/TEXTURE CEILINGS TO BE REMOVED

N

Main Level

10-5885 DIXIE RAMSEY ASBESTOS CONSULTANTS • TASE

King Consultants Environmental

SPECIFICATION SITE MAP
CARVER LEARNING CENTER
301 WEST 9TH STREET
SAN ANGELO, TX 76903

KC 26-01-11

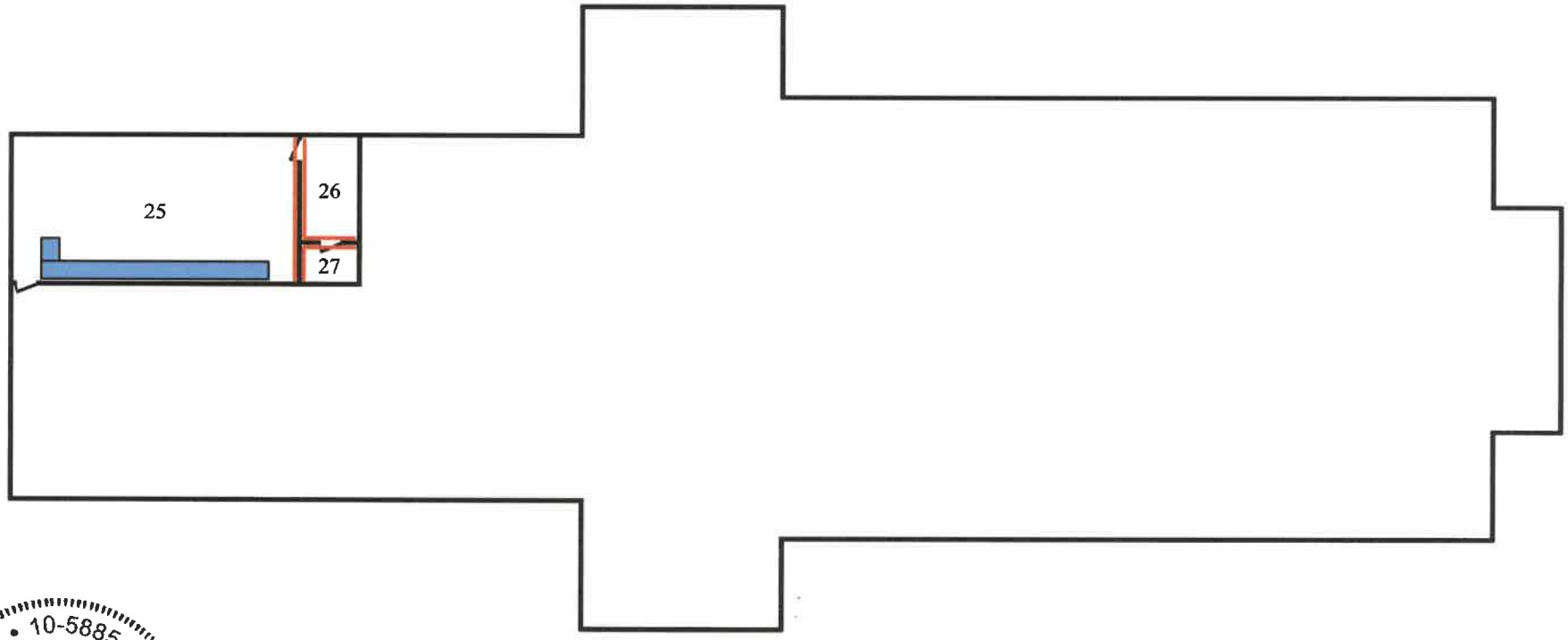

TEXAS ASBESTOS CONSULTANTS • 10-5885 DIXIE RUSSELL

| =SHEETROCK/JOINT COMPOUND/TEXTURE WALL TO BE REMOVED

=SHEETROCK/JOINT COMPOUND/TEXTURE FUR DOWN TO BE REMOVED

N

Basement

King Consultants Environmental

SPECIFICATION SITE MAP
CARVER LEARNING CENTER
301 WEST 9TH STREET
SAN ANGELO, TX 76903

KC 26-01-11

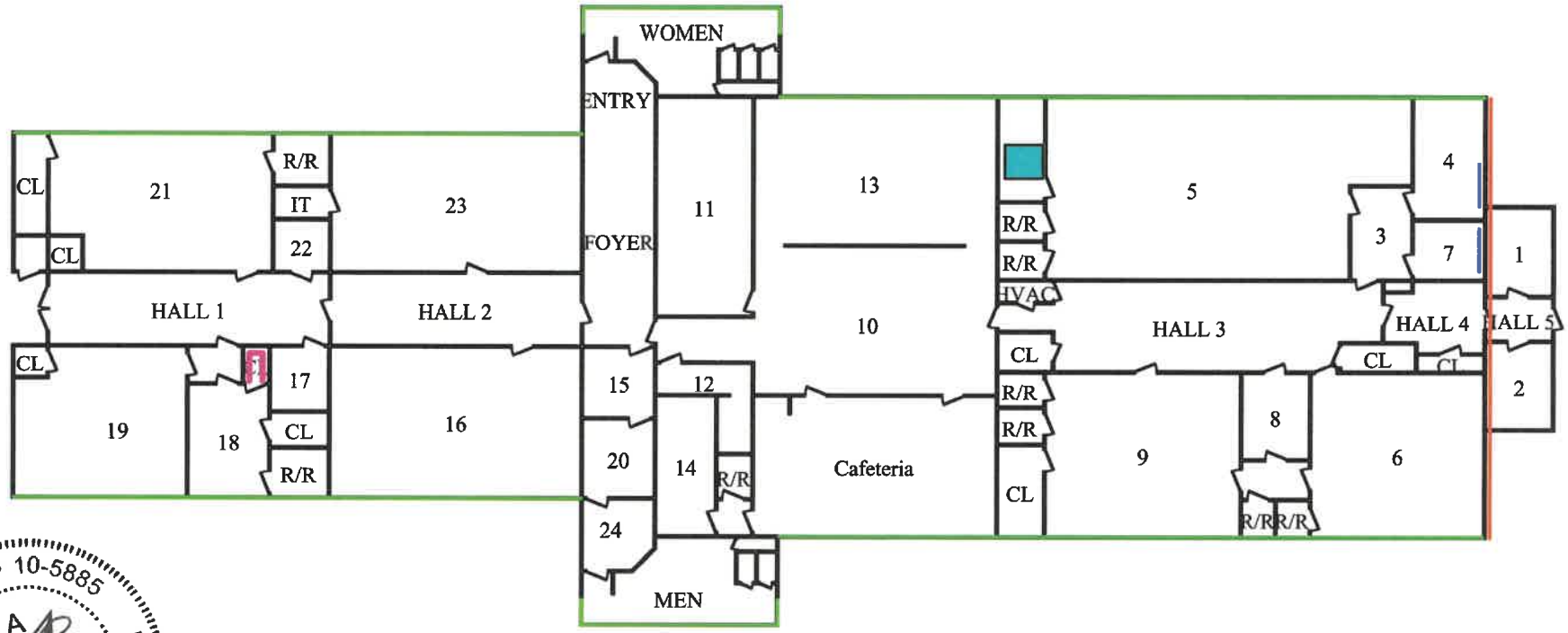

=PLASTER WALL TO BE REMOVED
=MASTIC BENEATH SHEETROCK ON PLASTER WALL TO BE REMOVED
=SINK UNDERCOATING TO BE REMOVED
=CHALKBOARD TO BE REMOVED
=INTERIOR WINDOW CAULKING TO BE REMOVED

N

Main Level

DIXIE RUMSEY ASBESTOS CONSULTANTS • 10-5885

SPECIFICATION SITE MAP
CARVER LEARNING CENTER
301 WEST 9TH STREET
SAN ANGELO, TX 76903

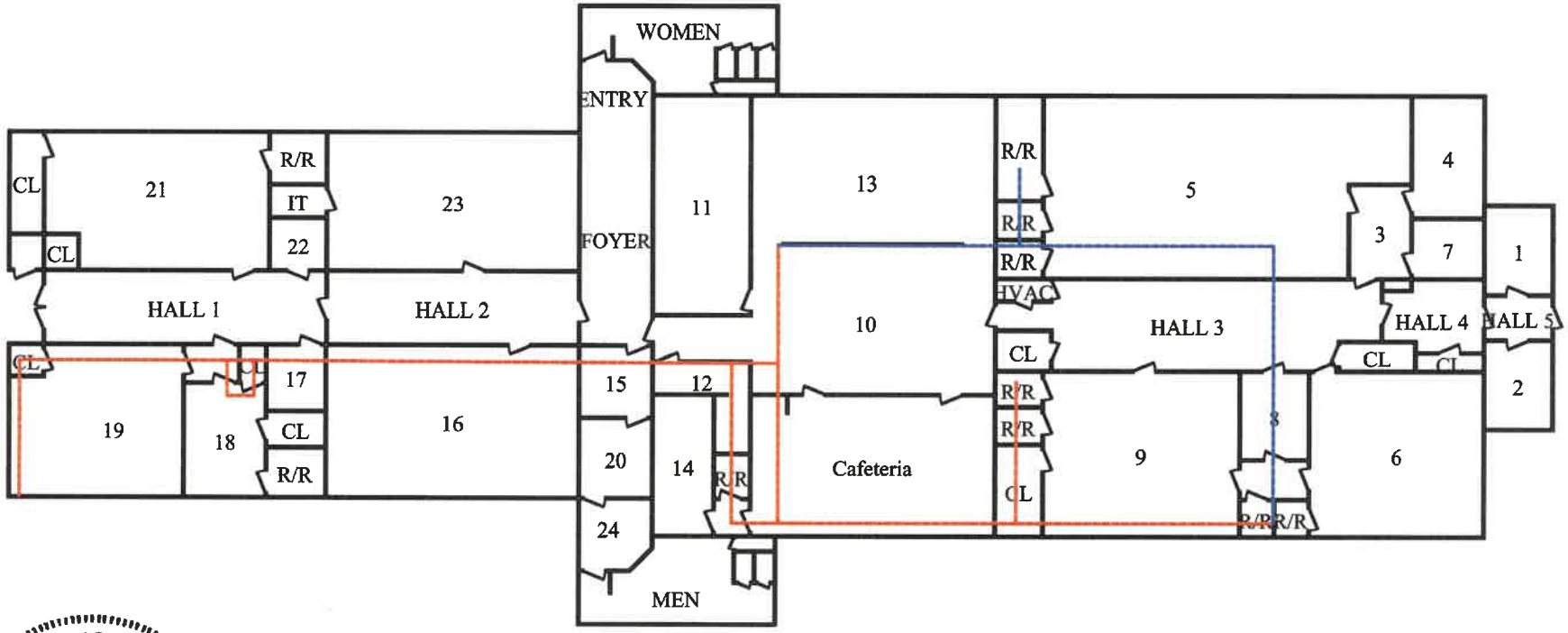

=HARD FITTINGS BENEATH SUBFLOOR TO BE REMOVED (VISIBLE PIPE ROUTE)

=HARD FITTINGS BENEATH SUBFLOOR TO BE REMOVED (SUSPECTED PIPE ROUTE)

N

Main Level

King Consultants Environmental

SPECIFICATION SITE MAP
CARVER LEARNING CENTER
301 WEST 9TH STREET
SAN ANGELO, TX 76903

KC 26-01-11

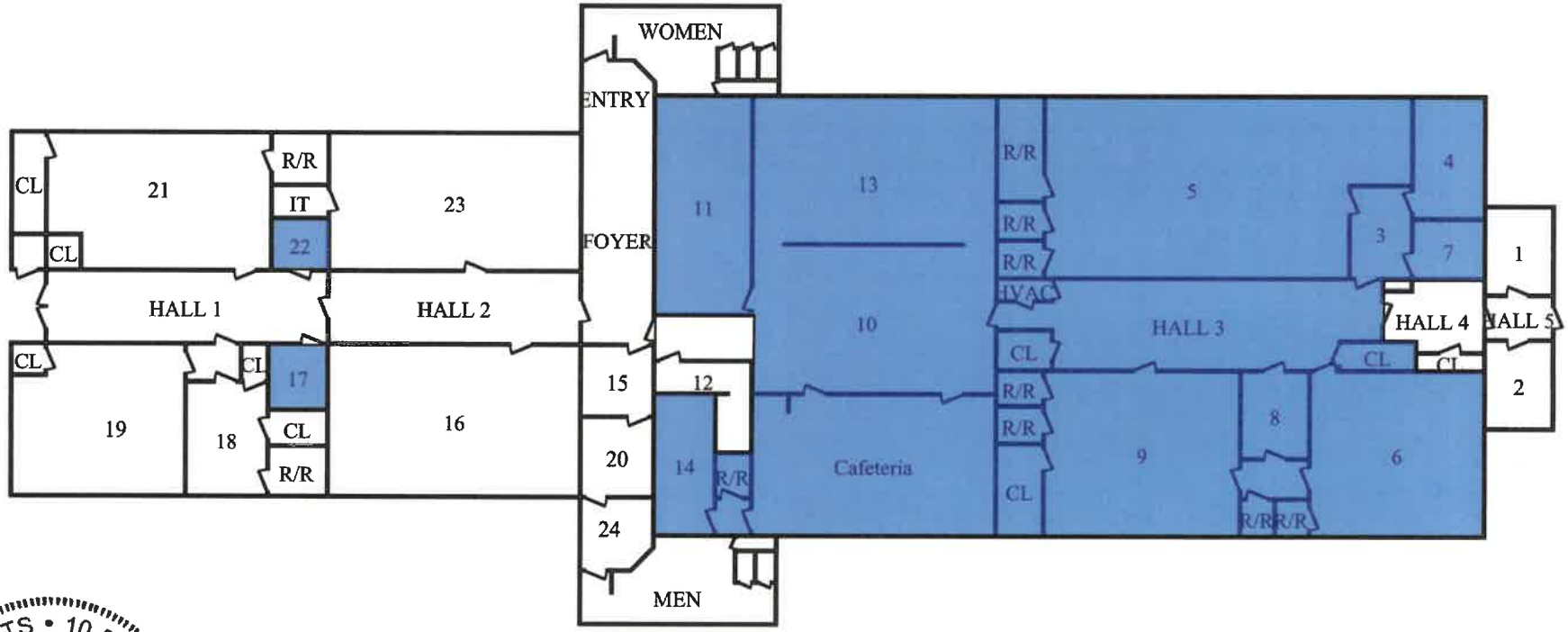

=VINYL FLOOR TILE/LINOLEUM/FELT PAPER WITH BLACK MASTIC TO BE REMOVED. LOCATED BENEATH MULTIPLE LAYERS OF FLOORING (ACBM AND NON-ACBM)

N

Main Level

DIXIE RUMSEY ASBESTOS CONSULTANTS • 10-5885

CERTIFICATE OF WORKER'S RELEASE
(PER WORKER)

Owner: San Angelo Independent School District, 1621 University Avenue; San Angelo, TX 76904

Project: Asbestos Abatement – Base Bid – Remove and properly dispose of joint compound & texture on sheetrock walls and fur down, plaster on walls, joint compound & texture on sheetrock ceilings, hard pipe fittings, vinyl linoleum with mastic, black mastic on wooden floors, felt paper with black mastic on floors, black mastic glue dots on plaster walls, transite chalkboards, window assemblies, & sink undercoating, as marked on the site maps.

Address: SAISD, Carver Learning Center, 301 West 9th Street; San Angelo, Texas 76903

Employee Name: _____

Employee SSN: _____

In consideration of my employment by _____(Contractor) in conjunction with the removal and proper disposal of asbestos containing materials, or other work in asbestos-contaminated work area(s), and for good, valuable, and sufficient consideration, herewith exchanged, the undersigned does hereby acknowledge, warrant, represent, covenant, and agree as follow:

(1) I acknowledge and understand that I have been or will be employed in connection with the removal of, proper disposal of, or other work in asbestos-contaminated work area. I acknowledge that I have been advised of and understand the dangers inherent in handling asbestos and breathing asbestos dust, including, but not limited to, THE FACT THAT ASBESTOS CAN CAUSE ASBESTOSIS AND IS A KNOW CARCINOGEN AND CAN, THEREFORE, CAUSE VARIOUS TYPES OF CANCER.
(2) I acknowledge and understand that ANY CONTACT WITH ASBESTOS, WHETHER IT CAN BE SEEN OR NOT, MAY CAUSE ASBESTOSIS AND VARIOUS FORMS OF CANCER, WHICH MAY NOT SHOW UP FOR MANY YEARS, and I covenant and agree faithfully to take all precautions required of me.
(3) I hereby warrant and represent that I have not been disabled, laid-off, or compensated for damages due to asbestosis or any other cancer disease.
(4) I represent that I can read the English language, or that I have had someone read this instrument to me, and I understand the meaning of all the provisions contained herein.

Employee: _____
(Signature and Date)

I hereby certify and represent that the above information is correct and further certify that documentation of the above represented facts will be provided to the Owner, if so directed. This Certificate of Worker's Release is valid for the duration of the Project.

Contractor: _____

Name: _____

Title: _____
(Signature and Date)

Witness: _____
(Signature and Date)

DISPOSAL SITE INFORMATION

Owner: San Angelo Independent School District, 1621 University Avenue; San Angelo, TX 76904

Project: Asbestos Abatement – Base Bid – Remove and properly dispose of joint compound & texture on sheetrock walls and fur down, plaster on walls, joint compound & texture on sheetrock ceilings, hard pipe fittings, vinyl linoleum with mastic, black mastic on wooden floors, felt paper with black mastic on floors, black mastic glue dots on plaster walls, transite chalkboards, window assemblies, & sink undercoating, as marked on the site maps.

Address: SAISD, Carver Learning Center, 301 West 9th Street; San Angelo, Texas 76903

The proposed disposal site for use in disposing of asbestos-containing waste and/or asbestos-contaminated debris meets or exceeds all current federal and state regulatory requirements.

Landfill Name: _____

Owner: _____

Address: _____

_____

_____

Contact Person: _____

Telephone: _____

I hereby certify and represent that the above information is correct and further certify that documentation of the above represented facts will be provided to the Owner, if so directed.

Contractor: _____

Name: _____

Title: _____

_____

(Signature and Date)

King Consultants
Environmental
1205 E. 46th Street
Lubbock, Texas 79404
(806) 763-6157
1-800-658-6018

SPECIFICATIONS
FOR
DEMOLITION

AT

SAN ANGELO ISD
CARVER LEARNING CENTER
301 WEST 9TH STREET
SAN ANGELO, TEXAS 76903

FOR

SAN ANGELO INDEPENDENT SCHOOL DISTRICT
1621 UNIVERSITY AVENUE
SAN ANGELO, TEXAS 76904

MARCH 2025

KC PROJECT # 26-01-11

TABLE OF CONTENTS

Part 1: General Information

1.1 Related Documents
1.2 Project Work Covered By Contract Documents
1.3 Work By Owner
1.4 Contractor Use Of Site And Premises
1.5 Work Sequence
1.6 Owner Occupancy
1.7 Preconstruction Meeting
1.8 Examination
1.9 Scope Of Work

Part 2: Construction Facilities and Temporary Controls

2.1 Related Documents
2.2 Temporary Water Service
2.3 Temporary Sanitary Facilities
2.4 Barriers
2.5 Water Control
2.6 Security
2.7 Parking
2.8 Progress Cleaning
2.9 Project Signs

Part 3: Building Demolition

3.1 Related Documents
3.2 General Demolition
3.3 Project Record Documents
3.4 Qualifications
3.5 Regulatory Requirements
3.6 Project Conditions

Part 4: Products

4.1 Related Documents
4.2 References
4.3 Preparation
4.4 Backfilling
4.5 Schedule
4.6 Scarifying
4.7 Tolerances
4.8 Field Quality Control

Part 5: Execution

5.1 Preparation
5.2 Demolition Requirements
5.3 Demolition
5.4 Disposal

PROJECT: San Angelo ISD
1621 University Avenue
San Angelo, Texas 76904

Demolition of Carver Learning Center
301 West 9th Street
San Angelo, Texas 76903

PART 1: GENERAL INFORMATION

1.1 Related Documents

A. Drawings, General Conditions of the Contract for Construction and Summary of Work – General Requirements apply to Work of this Section.

1.2 Project Work Covered By Contract Documents

A. Without force or effect, work of the total Project consists of demolition of the Carver Learning Center building, along with foundations, sidewalks, benches, and retaining walls located at 301 West 9th Street in San Angelo, Texas.

1.3 Work By Owner

A. There will be no work by owner except utility disconnects.

1.4 Contractor Use Of Site And Premises

A. Construction Operations: Limited to areas limited on Drawings.
B. Time Restrictions for Performing Work
   1. Normal working hours will be 8:00 am to 5:00 pm, Monday through Friday.
   2. Coordinate with the San Angelo ISD and Consultant for all work to be accomplished outside of the normal working hours.
C. Utility Outages and Shutdown
   1. All utilities will be disconnected by the owner.
   2. The following additional items will be disconnected by owner and removed by Contractor.
      a) Domestic water lines
      b) Gas lines
      c) Electrical

1.5 Work Sequence

A. Coordinate demolition schedule and operations with Consultant/Owner.
B. The start date is To Be Determined.
C. **Contractor shall have project completed within 50 business days from start date.**

1.6 Owner Occupancy

A. This building is unoccupied.

1.7 Preconstruction Meeting

A. Owner will schedule a meeting after Notice to Proceed.
B. Attendance Required: Consultant, Contractor and Owner

C. Agenda:
   1. Submission of insurance certificates and bonding
   2. Distribution of Contract Documents
   3. Designations of personnel representing the parties in Contract and the Consultant.
   4. Procedures and processing of field decision, applications for payments, proposal requests, Change Orders, and Contractor closeout procedures.
   5. Scheduling
   6. Use of premises by Owner and Contractor.
   7. Owner's requirements.
   8. Construction facilities and controls provided by Owner.
   9. Security and housekeeping procedures
   10. Procedures for maintaining record documents.

1.8 Examination

A. Verify that existing site conditions and substrate surfaces are acceptable for subsequent Work.

B. Examine and verify specific conditions described in individual specification sections.

C. Verify that utility services are available, of the correct characteristics, and in the correct location.

1.9 Scope Of Work

The following shall be applicable to the Carver Learning Center and associated items:

A. The Carver Learning Center building, in its entirety, shall be demolished, as marked on the site map. This includes all footings, slabs, sidewalks, retaining walls, steps, and all other concrete directly associated with the building.
B. The basement walls shall be removed at a minimum depth of 3'. The basement floor shall be busted or drilled for proper drainage. Backfill of the basement shall be in 8" lifts at 90%-95% compaction.
C. Install a 6' temporary fence around the work site.
D. All trees shall remain and be protected around the drip edge and wrapped with plywood. If any tree is to be removed due to demolition procedures, approval must be granted from San Angelo ISD prior to removal.
E. Remove concrete pads, sidewalks, awnings, and retaining walls, as marked on the site map.
F. All 4' chain link fence shall remain except for the fence running east and west parallel to the parking lot, as marked on the site map.
G. Remove all school signage.
H. Remove stumps on west side of the property.
I. Parking lot shall remain and not be damaged.
J. All portable buildings shall remain along with concrete steps and ramps accessing the portable buildings.
K. Basketball goals shall be removed and the concrete and back stops shall remain.
L. All sidewalks shall be removed other than the sidewalk along the street.
M. All sidewalks along the street that are to remain shall be protected to prevent damage.
N. All parking lots shall remain and not be damaged.
O. All curbs and gutters associated with the parking lot shall remain.
P. All manifest and load receipts shall be collected daily. All concrete that is taken to be reclaimed or disposed of at a location other than the landfill shall have documents stating location, number of loads, and documentation stating acceptance of materials.
Q. The contractor shall develop and implement a Stormwater Pollution Prevention Plan (SWPPP).
R. The contractor shall have a licensed HVAC company discharge all HVAC units.
S. Provide a minimum of 6" deep layer of clean topsoil for backfill.
T. All curbs and sidewalks along the street shall remain in place and not be damaged.
U. After approval of grading and finished dirt work, the contractor shall seed with a seed mixture approved by the school district
V. The contractor is responsible for watering the seeded area one time after the seed is broadcast.

PART 2: CONSTRUCTION FACILITIES AND TEMPORARY CONTROLS

2.1 Related Documents

A. Drawings, General Conditions of the Contract for Construction, Supplementary Conditions and General Requirements apply to work of this Section.

2.2 Temporary Water Service

A. The contractor is responsible for supplying water and electricity for this project.

2.3 Temporary Sanitary Facilities

A. The contractor shall provide and maintain required facilities.

2.4 Barriers

A. Entrance to work site by other than owner, contractor, and consultant is limited.

2.5 Water Control

A. Grade site to drain. Maintain excavations free of water. Provide, operate, and maintain pumping equipment.

B. Protect site from puddling or running water. Provide water barriers as required to protect site from soil erosion.

2.6 Security

A. Provides security at all times during work.

B. Provide temporary fencing to contain work site.

2.7 Parking

A. All parking is to be confined to the property of the work or at locations as designated by the owner.

2.8 Progress Cleaning

A. Maintain areas free of waste materials, debris, and rubbish. Maintain site in a clean and orderly condition at all times.

B. Remove waste materials, debris, and rubbish from site and dispose off-site at intervals as required to maintain clean site. All demolished material shall be transported off site at the end of each workday.

2.9 Project Signs

A. No signs are allowed without Owner's permission except those required by law.

PART 3: BUILDING DEMOLITION

3.1 Related Documents

A. The Drawings, General Conditions of the Contract for Construction, Supplementary conditions, and General Requirements apply to the work of this Section.

3.2 General Demolition

A. Demolition of designated structures and slab and removal of materials from site.
B. Demolition of all below grade construction, including foundations and footings to 3' below grade. Disconnecting, capping, and removal of identified utilities.
C. Removal of identified utilities.
D. The contractor is responsible for locating all underground utilities to prevent damage to fiber lines, gas lines, and water lines.

3.3 Project Record Documents

A. Accurately record actual locations of capped utilities and subsurface obstructions. Sewer is to be capped in a manner in accordance with the owner.

3.4 Qualifications

A. Demolition Firm: Company specializing in performing the Work of this Section with a minimum of five years documented experience.
B. All subcontractors must be approved by the owner.

3.5 Regulatory Requirements

A. Conform to applicable code for demolition of structures, safety of adjacent structures, dust control, runoff control, and disposal.
B. Obtain required permits from authorities.
C. Notify affected utility companies before starting work and comply with their requirements.
D. Do not close or obstruct roadways or hydrants without permits.
E. Conform to applicable regulatory procedures when discovering hazardous or contaminated materials.
F. Comply with governing EPA/TDSHS Notification Regulations before beginning demolition. Comply with hauling and disposal regulations of Authorities having Jurisdiction.

3.6 Project Conditions

A. Building to be demolished will be vacated and its use discontinued before the start of work.
B. Conditions existing at the time of Pre-Proposal inspection will be maintained by Owner as far as practical.
C. Storage or sale of removed items or materials on site is not Permitted.

PART 4: PRODUCTS

4.1 Related Documents

A. The Drawings, General Conditions of the Contract for construction, Supplementary Conditions and – General Requirements apply to the work of this Section.

4.2 References

A. ASTM D698 – Test Methods for Moisture-Density Relations of Soils and Soil-Aggregate Mixtures, Using 5.5 lb. (2.49 Kg) Rammer and 12-inch (304.8 mm) Drop.

B. ASTM D2922 – Test Methods for Density of Soil and Soil Aggregate in Place by Nuclear Methods (Shallow Depth).

4.3 Preparation

A. Compact sub-grade to density requirements for subsequent backfill materials.

B. Cut-out soft areas of sub-grade not capable of compaction in place. Backfill with fill and compact to density equal to or greater than requirements for subsequent fill material.

C. Scarify and proof roll sub-grade surface to a depth of 8 inches to identify soft spots; fill and compact to density equal to or greater than requirements for subsequent fill materials.

4.4 Backfilling

A. Backfill areas to contours and elevations with unfrozen materials.

B. Systematically backfill to allow maximum time for natural settlement. Do not backfill over porous, wet, frozen, or spongy sub-grade surfaces.

C. Fill: Place and compact material in equal continuous layers not exceeding 8 inches compacted depth.

D. Employ a placement method that does not disturb or damage other work.

E. Maintain optimum moisture content of backfill materials to attain required compaction density.

F. Make gradual grade changes. Blend slopes into level areas.

G. Remove surplus backfill materials from site.

H. Leave fill material stockpile areas free of excess fill materials.

I. Roto till topsoil to provide maximum of 1 ½ inch diameter dirt clods; Hand rake smooth.

J. Provide a minimum of an 6" deep layer of clean topsoil.

4.5 Schedule

A. Fill material: 90% density, ASTM D-1557

B. Topsoil: 85% density, ASTM D-1557.

4.6 Scarifying

A. Scarify existing lawn (turf) areas compacted during demolition to a minimum of 6 inches deep.

B. Reshape and level to meet adjacent undisturbed areas.

C. Roto till area to provide maximum of 1 ½ inch diameter dirt clods; Hand rake smooth.

4.7 Tolerances

A. Top Surface of General Backfilling: Plus or minus 1 inch from required/existing elevations.

4.8 Field Quality Control

A. Compaction testing will be performed in accordance with ASTM D6938, upon owner's discretion.

B. If tests indicate Work does not meet specified requirements, remove work, replace, and retest.

PART 5: EXECUTION

5.1 Preparation

A. A temporary 6' fence shall be erected. Lockable gates shall be installed.
B. Furnish sanitary facilities.
C. Mark locations of utilities.

5.2 Demolition Requirements

A. Conduct demolition to minimize interference with adjacent structures and occupancies.
B. Cease operations immediately if adjacent structures appear to be in danger. Notify Owner and Consultant. Do not resume operations until directed.
C. Conduct operations with minimum interference to public or private accesses. Maintain protected egress and access at all times.
D. Sprinkle Work with water to minimize dust. Provide hoses, water connections, and water trailer/truck for this purpose. **There shall be no visible dust.**
E. There shall be no use of cutting torches until work area is clear of all flammable material. Contractor shall maintain a fire watch and shall employ the use of portable fire suppression devices during all use of cutting torch operations.
F. Use of any type of explosives is prohibited.

5.3 Demolition

A. Disconnect, remove, cap, and identify designated utilities within designated areas.
B. Cut all piping a minimum of 36" below grade.
C. Remove concrete slabs on grade.
D. Rough grade and compact areas affected by demolition to assure water draining.
E. Remove demolished materials from site.
F. Do not burn or bury materials on site. Leave site in clean condition.
G. Remove temporary work.

5.4 Disposal

A. All demolition material must be disposed of in a certified landfill and waste manifest tickets shall be furnished to the owner.
B. No waste will be removed from the site utilizing a truck or dumpster until the waste manifest has been signed by the owner or owner's representative and a copy has been received.

MARKED SITE MAP

CARVER LEARNING CENTER

DEMOLITION OF BUILDING AND AWNING

6' TEMPORARY FENCE

REMOVAL OF 4' CHAIN LINK FENCE

REMOVAL OF STUMPS

King Consultants Environmental

San Angelo Independent School District
REQUEST FOR PROPOSAL

Bid Name:
Carver Abatement & Demo

Opening Date and Time:
3:00 PM – 3/25/26

Bid Number: 26-005

Completion Date: Spring/Summer 2026

Location of Opening:
Purchasing Department
1621 University

San Angelo, TX 76904

The undersigned authorized representative of the vendor indicated below hereby acknowledges:

1. That he/she is authorized to enter into contractual relationships on behalf of the company indicated below, and
2. That he/she has carefully examined this Bid Notice, the accompanying Bid Forms, and the General Terms and Conditions and Item Specifications associated with this Bid Invitation, and
3. That he/she proposes to supply any products or services submitted under this Bid Invitation at the prices quoted and in strict compliance with the General Terms and Conditions, and Item Specifications associated with this Bid Invitation, unless any exceptions are noted in writing with this bid response, and
4. That if any part of the bid is accepted, he/she will furnish all products or services awarded under this bid at the prices quoted and in strict compliance with the General Terms and Conditions, and Item Specifications associated with this Bid Invitation, unless any exceptions are noted in writing with this bid response, and
5. That any and all exceptions to the General Terms or Conditions of this bid have been noted in writing in this bid response, and that no other exceptions to the General Terms or Conditions will be claimed.

By submitting a bid, each bidder agrees to waive any claim it has or may have against the San Angelo Independent School District, the Architect/Engineer, and their respective employees, arising out of or in connection with the administration, evaluation, or recommendation of any bid; waiver of any requirements under the Bid Documents; or the Contract Documents; acceptance or rejection of any bids; and award of the Contract.

Offeror agrees to exhaust its administrative remedies under District Policy and the Disputes Clause of any resulting contract before seeking judicial relief of any type in connection with any matter related to this solicitation, the award of any contract, and any dispute under any resulting contract.

Name of Bidding Company	Date
Address	Signature of Authorized Representative
City, State, Zip	Printed name of Authorized Representative
Contact Name	Position of Authorized Representative
Telephone Number of Contact Person	Fax Number of Contact Person
E-mail Address of Contact Person	Web Address

SAN ANGELO INDEPENDENT SCHOOL DISTRICT Purchasing Department Carver Abatement & Demo RFP 26-005	Company Name	
	Contact	
	Phone Number	
	Address	

Asbestos		
Base Proposal		
1	**Carver Asbestos Abatement.** Contractor proposes to furnish all materials, labor, and equipment necessary to complete the work in accordance with said documents, of which this Proposal is a part, for the following sum:	
	Number of business days to complete Abatement	
A $20,000 owners contingency will be add to the final price of all bids by the owner.		**$20,000**
Total Base Bid Turnkey Project Price Including Owners Contingency		
Asbestos, Unit Pricing		
2	Per linear foot price for asbestos containing pipe insulation removal	price per linear foot
3	Per square foot price for asbestos containing floor tile and mastic removal	price per square foot
4	Per linear foot price for asbestos containing window caulking removal	price per linear foot
5	Price per asbestos containing hard fitting	price per hard fitting
6	Price per square foot for black mastic under sheetrock.	price per square foot
7	Per square foot price for air duct tape and mastic removal	price per square foot
8	Per square foot price removal of exterior moisture barrier	price per square foot

SAN ANGELO INDEPENDENT SCHOOL DISTRICT **Purchasing Department** **Carver Abatement & Demo** RFP 26-005	**Company Name**	
	Contact	
	Phone Number	
	Address	

Demolition		
Base Proposal		
1	**Carver Demolition.** Contractor proposes to furnish all materials, labor, and equipment necessary to complete the work in accordance with said documents, of which this Proposal is a part, for the following sum:	
	A $20,000 owners contingency will be add to the final price of all bids by the owner.	**$20,000**
	Total Base Bid Turnkey Project Price Including Owners Contingency	
	Number of business days to complete Demolition	
Demolition, Unit Pricing		
2	Concrete, 4-inch thick, 3,000 psi, concrete sidewalk, including, base preparation, grading and forming	price per square foot
Questionnaire		
3	Did you Attend the ***MANDATORY PRE BID WALK*** ?	Yes_____, No_____
4	Did you include your mandatory Bid Bond?	Yes_____, No_____

SAN ANGELO INDEPENDENT SCHOOL DISTRICT Purchasing Department Carver Abatement & Demo RFP 26-005	Company Name	
	Contact	
	Phone Number	
	Address	

Important Dates	
03/13/26 MANDATORY PRE BID WALK 11am	
03/25/26 Bids Due by 3PM	
04/20/26 Board Approval	

References	
List at least three ISD references or recent commercial customers, with contact information. Or attach 3 letters of reference to your bid.	
Name Of Customer, Contact Email, Contact Phone Number	

SAN ANGELO INDEPENDENT SCHOOL DISTRICT

GENERAL CONDITIONS FOR BIDDING

1. Bids shall be submitted on this form. All prices must be typed or written in ink. Bids written in pencil will not be accepted. Each bid shall be placed in a separate envelope, sealed and properly identified with the bid title and the time and date to be opened.

2. Bids must be received in the Purchasing Department office ***before the hour and date specified***. **DO NOT FAX OR EMAIL YOUR BID!**

3. The prices bid should be F.O.B. destination, inside delivery. All freight charges must be included in your bid pricing. If otherwise, state on Deviation/Compliance Signature form.

4. Delivery shall be made during normal school hours unless prior approval has been obtained from authorized District personnel.

5. All items bid must be new, unused, and in first-class condition, packaged in containers suitable for shipment and storage. If otherwise, state on Deviation/Compliance Signature form.

   All electrical items must meet all applicable OSHA standards and regulations, and must bear the appropriate listing from US, FMRC, NEMA, or U L Laboratories.

   Materials Safety Data Sheets (MSDS) on chemicals or any other products customarily requiring MSDS Sheets must be provided for each ordering department. MSDS Sheets must be delivered along with the shipment within the contract period. Additional MSDS Sheets must be provided in a timely manner at no charge upon request to the District.

6. Installation: the successful bidder shall provide the following services on the items bid, at no additional cost to the District, if otherwise, state on Deviation/Compliance Signature form.

   a. Provide transportation of items to the facility.
   b. Place the items in the proper location within the facility.
   c. Uncrate and completely assemble (if otherwise, state on Deviation/Compliance Signature form).
   d. Provide adjustment by a trained installation mechanic.
   e. Remove all the debris from site.

7. The District is exempt from Federal Excise Tax, and State Tax. Do not include tax in your bid totals. If it is determined that tax was included in the bid, it will not be included in the tabulation or any awards. The tax exemption certificate will be furnished upon request.

8. Any catalog, brand name, or manufacturer's reference used in the bid is **descriptive and not restrictive** and is intended to indicate type and quality desired. Bids on brands of like nature and quality will be considered. If bidding on other than referenced specifications, bid must show manufacturer, brand, model, etc. of item being offered. If other than brand(s) specified is offered, complete descriptive information of each article being bid should be included with the bid. If bidder takes no exception to the specification of referenced data, he will be required to furnish brand names, models, etc. as specified.

9. Samples, when requested, must be furnished at no cost to the District. Each sample, when requested, should be clearly marked with bidder's name and item number on the bid. **DO NOT ENCLOSE IN OR ATTACH BID TO SAMPLE**.

10. The Board of Trustees of San Angelo Independent School District reserves the right to accept or reject all or any part of any bid, waive minor technicalities and award the bid to best serve the interest of the District.

11. The District reserves the right to purchase or lease-purchase additional articles as listed on this bid subject to verification of the same or lower prices and conditions on bid.

12. All items and services being bid must conform to all appropriate local, state, and federal laws, ordinances, and regulations.

13. It is to be understood that the bidder, if awarded an order or contract, agrees to protect, defend, and hold harmless the San Angelo Independent School District from any suits or demands for payment that may be brought against it for the use of any patented material, process, article, or device that may enter into the manufacture and/or construction or from a part of the work covered by either order or contract and, bidder further agrees to indemnify and hold harmless the San Angelo Independent School District from suits or actions of every nature and description brought against it for, or on account of any injuries or damages received or sustained by any party or parties by, or for any of the acts of the vendor, his servants or agents.

14. It is **not** the policy of the District to purchase on the basis of low bids alone. In evaluating bids submitted and per the Texas Education Code 44.031(b), the following considerations shall be taken into account to determine the best value for the District.

    a. the purchase price;
    b. the reputation of the vendor and of the vendor's goods or services;
    c. the quality of the vendor's goods or services;
    d. the extent to which the goods or services meet the district's needs;
    e. the vendor's past relationship with the district;
    f. the impact on the ability of the district to comply with laws and rules relating to historically underutilized businesses;
    g. the total long-term cost to the district to acquire the vendor's goods or services;
    h. for a contract for goods and services, other than goods and services related to telecommunications and information services, building construction and maintenance, or instructional materials, whether the vendor or the vendor's ultimate parent company or majority owner: (a) has its principal place of business in this state; or (b) employs at least 500 persons in this state; and
    i. any other relevant factor specifically listed in the request for bids and proposals.

15. The contract will be awarded in the best interest of San Angelo Independent School District. Specific award information is located under Specific Terms and Conditions Item #1.

16. Any and all protests regarding San Angelo ISD bidding procedures will be governed by the San Angelo Independent School District Board Policy for Grievances.

17. If the District fails to appropriate funds to provide for the annual renewal of a contract, the District may cancel without termination charge. This is provided that the Contractor receives at least 30 days written notice of the termination stating the lack of funding as the reason for the termination.

18. The San Angelo Independent School District may not be held liable for non-funding of a contract caused through no fault of its own.

19. Vendors not responding appropriately to Bid Requests will be deleted from our qualified vendor list and will not be reinstated unless specifically requested. SAISD reserves the right to delete vendors that do not respond appropriately.

20. All Bidders must execute the "Affidavit of Non-Collusion", "Felony Conviction Notification", "Bidders Certification", "Debarment and Suspension Certification Form", "Deviation/Compliance Signature Form", or "No Bid Notification" enclosed herewith for his bid to be considered. The name of the company representative on these forms should be the same.

21. Bid results will be presented to the San Angelo Independent School District Board of Trustees for approval at the earliest opportunity following the bid/proposal opening if $50,000 or greater.

22. It is the policy of the San Angelo Independent School District not to discriminate on the basis of sex, disability, race, color, or national origin in its educational programs and/or activities, nor in its employment practices.

23. The bidder shall not sell, assign, transfer, or convey any contract resulting from this proposal, in whole or part, without the prior written consent from the District. Such consent shall not relieve the assigned of liability in the event of default by the assignee.

STANDARD TERMS AND CONDITIONS

1. CERTIFICATION: By signature on Bid Document the vendor certifies that:

   a. The vendor has not paid, or agreed to pay, any person, other than bona fide employees, a fee or brokerage resulting from the award of any contract resultant from this bid.
   b. The prices in this bid have been arrived at independently without consultation, communication, or agreement, for the purpose of restricting competition as to any matter relating to such prices, with any other vendor or potential vendor.

2. CONTRACT MODIFICATION: No modification of this contract shall bind buyer unless a formal contract amendment is executed between buyer and vendor.

3. CONTRACT AND PURCHASE ORDERS: A response to this Bid Document is an offer to contract with the SAISD and its members based upon the Item Specifications and the Standard Terms and Conditions contained in the Bid Document. Bids do not become contracts unless and until they are accepted by the SAISD and put into effect by the issuance of a Purchase Order(s) signed by an authorized representative of the SAISD Purchasing Department.

   This contract shall collectively include (1) the General Terms and Conditions and the Item Specifications included in the Bid Document and any subsequent addenda thereto, (2) the bidder's signed Notice of Bid Document sheet and any other data collection sheets included with the Bid Invitation, (3) the bidder's entire response to the Bid Invitation, (4) the bidder's Notice of Award Letter, (5) and any additional terms, conditions, or instructions contained in each individual Purchase Order. The contract shall be interpreted by and governed under the law of the State of Texas in Tom Green County.

4. PACKING AND SHIPPING: (If applicable) the vendor shall be responsible for industry standard packing which conforms to requirements of carrier's tariffs and ICC regulations. Containers must be clearly marked as to the purchase order number. All shipments are to be F.O.B. destination, freight prepaid, to San Angelo Independent School District at the specific address on the purchase order. Delivery shall be made during normal working hours only, 8:00am to 3:00pm, unless approval for late delivery has been obtained.

5. NO REPLACEMENT OF DEFECTIVE TENDER: (If applicable) every tender of goods must fully comply with all the provisions of this contract as to time of delivery, quantity, assortment, quality, and the like. If a tender is made which does not fully conform, this shall constitute a breach, and vendor shall not have the right to substitute a conforming tender.

6. DEFAULT IN ONE INSTALLMENT TO CONSTITUTE A TOTAL BREACH: (If applicable) each installment or lot of this contract is dependent on every other installment or lot and delivery of non-conforming goods/services or a default of any nature under one installment or lot will impair the value of the whole contract and constitutes a breach of the contract as a whole.

7. GRATUITIES: The buyer may, by written notice to the vendor, cancel this contract if it is found by buyer that gratuities, in the form of entertainment, gifts or otherwise were offered or given by the vendor or any agent or representative of the vendor, to any employee of the San Angelo Independent School District with a view toward securing an order or securing favorable treatment with respect to the awarding or amending, or the making of any determinations with respect to the performing of such order. In the event this contract is canceled by the buyer pursuant to this provision, buyer shall be entitled, in addition to any other rights and remedies, to recover or withhold from the vendor the amount of the gratuity.

8. WARRANTIES: (If applicable) vendor warrants that all goods delivered under this contract will conform to the requirements of this contract (including all applicable descriptions, specifications, drawings, and samples), and will be free from defects in design and fit for the intended purposes. Any inspection or acceptance of the goods by buyer shall not alter or affect the obligations of vendor or the right of buyer under the foregoing warranties.

9. ASSIGNMENT-DELEGATION: No right or interest in this contract shall be assigned by vendor without the written permission of buyer, and no delegation of any duty of vendor shall be made

without permission of buyer. Any attempted assignment of delegation shall be wholly void and totally ineffective for purposes unless made in conformity with this paragraph.

10. ASSIGNMENT-CLAIMS: Vendor and the San Angelo Independent School District recognize that in actual economic practice overcharges resulting from anti-trust violations are in fact borne by the District. Therefore, the vendor hereby assigns the District any and all claims for such overcharges.

11. ADVERTISING: Vendor shall not advertise or publish, without the District's prior consent, the fact that the District has entered into this contract, except to the extent necessary to comply with proper requests for information as provided by appropriate statues.

12. TITLE AND RISK OF LOSS: (If applicable) the title and risk of loss of the goods shall not pass to the District until the District actually receives the goods at the point of delivery.

13. INSPECTION: (If applicable) all goods are subject to final inspection and acceptance by the District. Material/services failing to meet the requirements of this contract will be held at vendor's risk and may be returned to the vendor. If so returned, the cost of transportation, unpacking, inspection, repackaging, reshipping, or other like expenses are the responsibility of the vendor.

14. LIENS: All goods delivered, and labor performed under this contract shall be free of all liens, and if the District requests, a formal release of all liens will be delivered to the District.

15. INDEMNIFY: Vendor agrees to indemnify and hold the District harmless from any damage or expense whatsoever resulting to the District from any and all claims and demands on account of infringement or alleged infringement of any patent in connection with the manufacture of use of any product included in this contract. Upon written requests the vendor will defend, at it's own cost and expense, any legal action or suit against the District involving any such alleged patent infringement and will pay and satisfy any and all judgements or decrees rendered in any such legal actions or suits. Vendor will indemnify San Angelo Independent School District against all claims for damages to persons or property resulting from defects in materials or workmanship.

16. REMEDIES AND APPLICABLE LAWS: This contract shall be governed by San Angelo Independent School District and vendor shall have all remedies afforded each by the Uniform Commercial Code, as adopted in the State of Texas, except as otherwise provided in this contract or in statutes pertaining specifically to the State. This contract shall be governed by the laws of the State of Texas, and suits pertaining to this contract may be brought only in the courts of the State of Texas in Tom Green County.

17. CONFLICT OF INTEREST: This contract is subject to cancellation by buyer if any person significantly involved in initiating, negotiating, securing, drafting or creating the contract on behalf of San Angelo Independent School District, is at any time while the contract is in effect, an employee of any other party to the contract in any capacity or a consultant to any other party of the contract with respect to the subject matter of the contract.

18. FORCE MAJEURE: Neither party shall be held responsible for any losses resulting if the fulfillment of any terms or conditions of this contract is delayed or prevented by any other cause not within the control of the party whose performance is interfered with and which, by the exercise of reasonable diligence, said party is unable to prevent.

19. RIGHT TO ASSURANCE: Whenever one party to this contract in good faith has reason to question the other party's intent to perform, he may demand that the other party give a written assurance of this intent to perform. In the event that demand is made and no assurance is given within five (5) days, the demanding party may treat this failure as an anticipatory repudiation of the contract.

20. INTERPRETATION-PAROL EVIDENCE: This contract is intended by the parties as a final expression of their agreement and is intended also as a complete and exclusive statement of the terms of this agreement. No course of prior dealing between the parties and no usage of the trade shall be relevant to supplement or explain any term used in this contract. Acceptance or acquiescence in a course of performance rendered under this contract shall not be relevant to determine the meaning of this contract even though the accepting or acquiescing party has knowledge of the nature of the performance and opportunity to object. Whenever a term defined by the Uniform Commercial Code is used in this contract, the definition contained in the Code is to control.

21. COMPLIANCE OF LAWS: The final contract must follow all federal and Texas State laws and regulations and is subject to termination by the Governing Board of the San Angelo Independent School District, termination for non-availability of funding and for prepayment, without penalty.

22. CHOICE OF LAW: The parties hereby agree that this agreement was negotiated, made and entered in the State of Texas and under the laws of the State of Texas.

23. INFRINGEMENT: Contractor agrees to protect San Angelo Independent School District from claims involving infringement or copyrights.

24. TECHNICAL SPECIFICATIONS: Technical specifications define the minimum acceptable standard.

25. REMEDIES FOR NON-PERFORMANCE OF CONTRACT, AND TERMINATION OF CONTRACT: If the vendor cannot comply with the terms and conditions in fulfilling its contract as anticipated, the vendor must supply the same products or services contracted from other sources at the contract price. The vendor's delay in the above will constitute the vendor's material breach of contract, whereupon the SAISD may terminate the vendor's contract for cause as provided by the remainder of this section.

If any delay or failure of performance is caused by a Force Majeure event as described in section #18 of this Standard Terms and Conditions document entitled "Force Majeure," the SAISD may, in its sole discretion, terminate this contract in whole or part, provided such termination follows the remaining requirements of this section.

Except as otherwise provided for within the Standard Terms and Conditions of this document, this contract may be terminated in whole or in part by either party in the event of substantial failure by the other party to fulfill its obligations under this contract through no fault of the terminating party; provided that no such termination may be implemented unless and until the other party is given (1) at least ten (10) days written notice (delivered by certified mail, return receipt requested) of intent to terminate, and (2) an opportunity for consultation with the terminating party, followed by a reasonable opportunity, of not more than ten (10) working days, to rectify the defects in products or performance, prior to termination.

Valid causes for termination of this contract will include, but are not limited to:

(a) The vendor's failure to adhere to any of the provisions of the General Conditions and Standard Terms and Conditions of the Bid Document.
(b) The vendor delivering any product(s) that fails to meet the Item Specifications included in this Bid Invitation relating to the awarded product(s).
(c) The vendor delivering any substitution(s) of product(s) different than those originally bid and awarded without the written approval of SAISD.
(d) The vendor's incomplete response to the Bid Document.
(e) And the vendor's noncompliance to any additional terms, conditions, or instructions contained in each individual Purchase Order issued by the SAISD.

26. ORDER OF PRECEDENCE: In the event of conflict, the following precedence shall prevail: 1) terms and conditions set forth on the face of the contract, 2) provisions set forth on specifications, 3) provisions set forth in Referenced Documents; and 4) the general bidding instructions to bidders.

27. ERRORS OR OMISSIONS: The District is not responsible for any bidder's errors or omissions.

28. CONFIDENTIAL INFORMATION: If a vendor believes that a bid, proposal, offer, or specification contains information that shall be withheld from disclosure, a statement advising the procurement officer must be attached and noted on page one of the document.

29. ADDENDUM: In the event that any changes to this Bid Document occur after the mailing or other delivery of the original Bid Document, the changes or corrections to this Bid Invitation will be made by addendum. ***It is your responsibility to obtain any addenda that pertains to this bid.*** We are no longer mailing the specifications or addenda.

30. EXTENSION/NON-APPROPRIATIONS CLAUSE: This contract may be renewed for two additional one-year terms if the vendor and the District agree.

31. Price increases for additional year will be negotiated not to exceed the CPI in the San Angelo area at the time of renewal. Price negotiations may be negotiated to prices below the current pricing.

32. Negotiations for additional years and price restructuring must be completed forty-five (45) days before the date of renewal.

33. INSURANCE REQUIREMENTS - PROOF OF INSURANCE WILL BE REQUIRED FOR GENERAL LIABILITY, AUTOMOBILE LIABILITY, AND WORKERS' COMP. INSURANCE LIMITS WILL BE $1,000,000 PER OCCURRENCE ON GENERAL LIABILITY, $500,000 ON AUTO, AND STATUTORY LIMITS ON WORKERS' COMP. THESE REQUIREMENTS APPLY TO ALL CATEGORIES WHERE SERVICES ARE PROVIDED ON A SAN ANGELO ISD SITE.

CONSTRUCTION BOND REQUIREMENTS - BONDING SURETIES MUST BE QUALIFIED TO DO BUSINESS IN TEXAS AND ACCEPTABLE TO THE DISTRICT.

BID BOND IN THE AMOUNT OF FIVE PERCENT (5%) OF THE BID MUST BE SUBMITTED WITH ANY CONSTRUCTION BID.
PAYMENT BONDS WILL BE REQUIRED IF THE CONTRACT FOR SERVICES EXCEEDS $25,000.00.
PERFORMANCE BONDS WILL BE REQUIRED IF THE CONTRACT FOR SERVICES EXCEEDS $100,000.00.

FORM A

NON-COLLUSION STATEMENT

The undersigned Proposer, by signing and executing this proposal, certifies and represents to the **San Angelo Independent School District** that Proposer has not offered, conferred or agreed to confer any pecuniary benefit, as defined by Section 1.07 (a)(6) of the Texas Penal Code, or any other thing of value, as consideration for the receipt of information or any special treatment or advantage relating to this proposal;

the Proposer also certifies and represents that Proposer has not offered, conferred or agreed to confer any pecuniary benefit or other things of value as consideration for the recipient's decision, opinion, recommendation, vote or other exercise of discretion concerning this proposal.

the Proposer certifies and represents that Proposer has neither coerced nor attempted to influence the exercise of discretion by any officer, trustee, agent or employee of the **San Angelo Independent School District** concerning this proposal on the basis of any consideration not authorized by law.

the Proposer also certifies and represents that Proposer has not received any information not available to other proposers so as to give the undersigned an advantage with respect to this proposal.

the Proposer further certifies and represents that Proposer has not violated any state, federal or local law, regulation or ordinance relating to bribery, improper influence, collusion or the like and that Proposer will not in the future, offer, confer, or agree to confer any pecuniary benefit or other thing of value of any officer, trustee, agent or employee of the **San Angelo Independent School District** in return for the person having exercised the person's official discretion, power or duty with respect to this proposal;

the Proposer certifies and represents that it has not now and will not in the future offer, confer, or agree to confer a pecuniary benefit or other thing of value to any office, trustee, agent or employee of the **San Angelo Independent School District** in connection with information regarding this proposal, the submission of this proposal, the award of this proposal or the performance, delivery or sale pursuant to this proposal;

the Proposer certifies that the Proposer has not prepared this proposal and will not prepare any future proposals arising from this Request for Proposal (RFP) in collusion with any other respondent, and that the content of any future proposals arising out of this RFP will not be communicated by the undersigned nor by any employee or agent to any other person engaged in this type of business prior to the District’s selection of a contractor for this RFP.

_____

FIRM NAME

_____

ADDRESS

_____

CITY/STATE/ZIP

_____

TYPED NAME OF REPRESENTATIVE(S)

_____

SIGNATURE OF REPRESENTATIVE(S)

_____

DATE

FORM B

FELONY CONVICTION NOTIFICATION

State of Texas Legislative Senate Bill No. 1, Section 44.034, Notification of Criminal History, Subsection (a), states, "a person or business entity that enters into a contract with a school district must give advance notice to the District if the person or owner or operator of the business entity has been convicted of a felony." The notice must include a general description of the conduct resulting in the conviction of a felony.

Subsection (b) states, "a school district may terminate a contract with a person or business entity if the district determines that the person or business entity failed to give notice as required by Subsection (a) or misrepresented the conduct resulting in the conviction." The district must compensate the person or business entity for services performed before the termination of the contract.

This notice is not required of a publicly held corporation.
Please complete the information below:

I, the undersigned agent for the firm named below, certify that the information concerning notification of felony convictions has been reviewed by me and the following information furnished is true to the best of my knowledge.

Vendor's Name:_____

Authorized Company Official's Name (please print or type):

_____

A. My firm is a publicly held corporation; therefore, this reporting requirement is not applicable:

Signature of Company Official:_____Date:_____

B. My firm is neither owned nor operated by anyone who has been convicted of a felony.

Signature of Company Official:_____Date:_____

C. My firm is owned or operated by the following individual(s) who has/have been convicted of a felony:

Name of Felon(s):_____

Details of Conviction(s):_____

_____

Signature of Company Official:_____**Date:**_____
(Name should be the same as on the affidavit-Form A)

Contractor is responsible for the performance of the persons, employees and/or subcontractors Contractor assigns to provide services for the San Angelo ISD pursuant to this Contract on any and all San Angelo ISD campuses or facilities. Contractor will not assign individuals to provide services at a San Angelo ISD campus or facility who have a history of violent, unacceptable, or grossly negligent behavior or who have a felony conviction, without the prior written consent of the San Angelo ISD Purchasing Department. Prior to supplying labor services under this Contract, Contractor shall provide a list identifying the individuals, employees and subcontractors that may be assigned to San Angelo ISD along with a letter signed by an appropriate officer of Contractor that affirms compliance with this provision. Contractor will revise such letter each time there is a change in Contractor's personnel assigned to a San Angelo ISD campus or facility, but in any case, annually on the anniversary date of this Contract, if applicable.

FORM C

BIDDER'S CERTIFICATION

The 1985 Texas Legislature passed HB 620 relating to bids by nonresident contractors. The pertinent portion of the Act has been extracted and is as follows:

Section 1. (a)

(2) "Nonresident bidder" means a bidder whose principal place of business is not in this state but excludes a contractor whose ultimate parent company or majority owner has its principal place of business in this state.

(3) "Texas resident bidder" means a bidder whose principal place of business is in this state and includes a contractor whose ultimate parent company or majority owner has its principal place of business in this state.

Section 1. (b) The state or a governmental agency of the state may not award a contract for general construction, improvements, services, or public works projects or purchases of supplies, materials, or equipment to a nonresident bidder unless the nonresident's bid is lower than the lowest bid submitted by a responsible Texas resident bidder by the same amount that a Texas resident bidder would be required to underbid a nonresident bidder to obtain a comparable contract in the state in which the nonresident's principal place of business is located.

I certify that _____ is a
(Company Name)

Resident Bidder of Texas as defined in HB 620.

Signature_____

Print Name_____

I certify that _____ is a
(Company Name)

Nonresident Bidder of Texas as defined in HB 620 and our principal place of business is:

_____
(City and State)

Signature_____

Print Name_____

FORM D

DEBARMENT OR SUSPENSION CERTIFICATION FORM

Non-Federal entities are prohibited from contracting with or making sub-awards under covered transaction to parties that are suspended or debarred or whose principals are suspended or debarred. Covered transactions include procurement of goods or services equal to or in excess of $100,000. Contractors receiving individual awards of $100,000 or more and all sub-recipients must certify that the organization and its principals are not suspended or debarred.

By submitting this offer and signing this certificate, this bidder:

- Certifies that no suspension or debarment is in place, which would preclude receiving a federally funded contract under the Federal OMB, A-102, Common Rule (§_.36).

Vendor Name:_____

Vendor Address:_____

_____

_____

Vendor Telephone:_____

Authorized Company Official's Name:_____
(printed)

Signature of Company Official:_____

Date:_____

FORM E

DEVIATION/COMPLIANCE FORM

_____
COMPANY NAME

_____
ADDRESS CITY STATE

_____ _____
PHONE NUMBER FAX NUMBER

If the undersigned bidder intends to deviate from the General Conditions Standard Terms and Conditions or Item Specifications listed in this bid invitation, all such deviations must be listed on this page, with complete and detailed conditions and information included or attached. The District will consider any deviations in its bid award decisions, and the District reserves the right to accept or reject any bid based upon any deviations indicated below or in any attachments or inclusions.

In the absence of any deviation entry on this form, the bidder assures the District of their full compliance with the Standard Terms and Conditions, Item Specifications, and all other information contained in this Bid Invitation.

☐ No Deviation

☐ Yes Deviations

If yes is checked, please list below.

_____

_____

_____

_____

_____

_____

_____

_____

_____

_____

_____

FORM F

NO BID NOTIFICATION

VENDOR NAME_____AGENT'S NAME_____

ADDRESS_____BID NUMBER_____

_____DESCRIPTION_____

The San Angelo Independent School District is interested in receiving competitive pricing on all items bid. We also want to keep your firm as a bidder and supplier of materials and equipment. Therefore, it is important for us to determine why you are not bidding on this item. We will analyze your input carefully and try to determine if future changes are needed in our specifications and/or procedures.

I did not bid for the following reason: (PLEASE CHECK ONE OF THE LISTED REASONS)

_____ Do not supply the requested product

_____ Quantities offered are too small or too large to be supplied by my company.
(please circle one of the underlined)

_____ Specifications are "too tight" or written around a particular product.
(Please elaborate on this item)_____

_____

_____ I cannot bid against manufacturer or jobber on this item.
(please circle one of the underlined)

_____ Time frame for bidding was too short for my organization.

_____ Not awarded a contract by SAISD when you felt you were low bidder.

_____ Other_____

_____

Please indicate your choice for remaining on San Angelo ISD's bid list.

_____I wish to remain on bid list. _____I do not wish to remain on bid list.

_____
VENDOR'S SIGNATURE DATE

Certification Packet

_____
VENDOR NAME

In accordance with §200.326 of the Uniform Administrative Requirements, Cost Principles, and Audit Requirements for Federal Awards (sometimes referred to as the new "EDGAR"), this Addendum ("**Addendum**") is proof of the vendor's willingness and ability to comply with certain requirements which may be applicable to specific SAISD purchases using federal grant funds.

It amends and is hereby incorporated into an existing agreement between the parties as follows:

I. REQUIRED CONTRACT PROVISIONS FOR NON-FEDERAL ENTITY CONTRACTS UNDER FEDERAL AWARDS – APPENDIX II TO 2 CFR PART 200

(A) Contracts for more than the simplified acquisition threshold currently set at $150,000, which is the inflation adjusted amount determined by the Civilian Agency Acquisition Council and the Defense Acquisition Regulations Council (Councils) as authorized by 41 U.S.C. 1908, must address administrative, contractual, or legal remedies in instances where contractors violate or breach contract terms, and provide for such sanctions and penalties as appropriate.

Pursuant to Federal Rule (A) above, when federal funds are expended by SAISD, SAISD reserves all rights and privileges under the applicable laws and regulations with respect to this procurement in the event of breach of contract by either party.

Does vendor agree? YES_____Initials of Authorized Representative of vendor
(B) Termination for cause and for convenience by the grantee or subgrantee including the manner by which it will be affected and the basis for settlement. (All contracts in excess of $10,000)

Pursuant to Federal Rule (B) above, when federal funds are expended by SAISD, SAISD reserves the right to immediately terminate any agreement in excess of $10,000 resulting from this procurement process in the event of a breach or default of the agreement by Vendor, in the event vendor fails to: (1) meet schedules, deadlines, and/or delivery dates within the time specified in the procurement solicitation, contract, and/or a purchase order; (2) make any payments owed; or (3) otherwise perform in accordance with the contract and/or the procurement solicitation. SAISD also reserves the right to terminate the contract immediately, with written notice to vendor, for convenience, if SAISD believes, in its sole discretion that it is in the best interest of SAISD to do so. The vendor will be compensated for work performed and accepted and goods accepted by SAISD as of the termination date if the contract is terminated for convenience of SAISD. Any award under this procurement process is not exclusive and SAISD reserves the right to purchase goods and services from other vendors when it is in the best interest of SAISD.

Does vendor agree? YES_____Initials of Authorized Representative of vendor.

(C) *Equal Employment Opportunity*. Except as otherwise provided under 41 CFR Part 60, all contracts that meet the definition of "federally assisted construction contract" in 41 CFR Part 601.3 must include the equal opportunity clause provided under 41 CFR 60-1.4(b), in accordance with Executive Order 11246, "Equal Employment Opportunity" (30 FR 12319, 12935, 3 CFR Part, 1964-1965 Comp., p. 339), as amended by Executive Order 11375, "Amending Executive Order 11246 Relating to Equal Employment Opportunity," and implementing regulations at 41 CFR part 60, "Office of Federal Contract Compliance Programs, Equal Employment Opportunity, Department of Labor."

Pursuant to Federal Rule (C) above, when federal funds are expended by SAISD on any federally assisted construction contract, the equal opportunity clause is incorporated by reference herein.

Does vendor agree to abide by the above? YES_____ Initials of Authorized Representative of vendor

(D) *Davis-Bacon Act*, as amended (40 U.S.C. 3141-3148). When required by Federal program legislation, all prime construction contracts in excess of $2,000 awarded by non-Federal entities must include a provision for compliance with the Davis-Bacon Act (40 U.S.C. 31413144, and 3146- 3148) as supplemented by Department of Labor regulations (29 CFR Part 5, "Labor Standards Provisions Applicable to Contracts Covering Federally Financed and Assisted Construction"). In accordance with the statute, contractors must be required to pay wages to laborers and mechanics at a rate not less than the prevailing wages specified in a wage determination made by the Secretary of Labor. In addition, contractors must be required to pay wages not less than once a week. The non- Federal entity must place a copy of the current prevailing wage determination issued by the Department of Labor in each solicitation. The decision to award a contract or subcontract must be conditioned upon the acceptance of the wage determination. The non-Federal entity must report all suspected or reported violations to the Federal awarding agency. The contracts must also include a provision for compliance with the Copeland "Anti-Kickback" Act (40 U.S.C. 3145), as supplemented by Department of Labor regulations (29 CFR Part 3, "Contractors and Subcontractors on Public Building or Public Work Financed in Whole or in Part by Loans or Grants from the United States"). The Act provides that each contractor or subrecipient must be prohibited from inducing, by any means, any person employed in the construction, completion, or repair of public work, to give up any part of the compensation to which he or she is otherwise entitled. The non-Federal entity must report all suspected or reported violations to the Federal awarding agency.

Pursuant to Federal Rule (D) above, when federal funds are expended by SAISD, during the term of an award for all contracts and subgrants for construction or repair, the vendor will be in compliance with all applicable Davis-Bacon Act provisions.

Does vendor agree? YES _____ Initials of Authorized Representative of vendor

(E) *Contract Work Hours and Safety Standards Act (40 U.S.C. 3701-3708).* Where applicable, all contracts awarded by the non-Federal entity in excess of $100,000 that involve the employment of mechanics or laborers must include a provision for compliance with 40 U.S.C. 3702 and 3704, as supplemented by Department of Labor regulations (29 CFR Part 5). Under 40 U.S.C. 3702 of the Act, each contractor must be required to compute the wages of every mechanic and laborer on the basis of a standard work week of 40 hours. Work in excess of the standard work week is permissible provided that the worker is compensated at a rate of not less than one and a half times the basic rate of pay for all hours worked in excess of 40 hours in the work week. The requirements of 40 U.S.C. 3704 are applicable to construction work and provide that no laborer or mechanic must be required to work in surroundings or under working conditions which are unsanitary, hazardous or dangerous. These requirements do not apply to the purchases of supplies or materials or articles ordinarily available on the open market, or contracts for transportation or transmission of intelligence.

Pursuant to Federal Rule (E) above, when federal funds are expended by SAISD, the vendor certifies that during the term of an award for all contracts by SAISD resulting from this procurement process, the vendor will be in compliance with all applicable provisions of the Contract Work Hours and Safety Standards Act.

Does vendor agree? YES_____Initials of Authorized Representative of vendor

(F) *Rights to Inventions* Made Under a Contract or Agreement. If the Federal award meets the definition of "funding agreement" under 37 CFR §401.2 (a) and the recipient or subrecipient wishes to enter into a contract with a small business firm or nonprofit organization regarding the substitution of parties, assignment or performance of experimental, developmental, or research work under that "funding agreement," the recipient or subrecipient must comply with the requirements of 37 CFR Part 401, "Rights to Inventions Made by Nonprofit Organizations and Small Business Firms Under Government Grants, Contracts and Cooperative Agreements," and any implementing regulations issued by the awarding agency.

Pursuant to Federal Rule (F) above, when federal funds are expended by SAISD, the vendor certifies that during the term of an award for all contracts by SAISD resulting from this procurement process, the vendor agrees to comply with all applicable requirements as referenced in Federal Rule (F) above.

Does vendor agree? YES_____Initials of Authorized Representative of vendor

(G) *Clean Air Act (42 U.S.C. 7401-7671q.)* and the Federal Water Pollution Control Act (33 U.S.C. 1251-1387), as amended—Contracts and subgrants of amounts in excess of $150,000 must contain a provision that requires the non-Federal award to agree to comply with all applicable standards, orders or regulations issued pursuant to the Clean Air Act (42 U.S.C. 7401-7671q) and the Federal Water Pollution Control Act as amended (33 U.S.C. 1251- 1387). Violations must be reported to the Federal awarding agency and the Regional Office of the Environmental Protection Agency (EPA).

Pursuant to Federal Rule (G) above, when federal funds are expended by SAISD, the vendor certifies that during the term of an award for all contracts by SAISD resulting from this procurement process, the vendor agrees to comply with all applicable requirements as referenced in Federal Rule (G) above.

Does vendor agree? YES _____Initials of Authorized Representative of vendor

(H) *Debarment and Suspension (Executive Orders 12549 and 12689)*—A contract award (see 2 CFR 180.220) must not be made to parties listed on the government wide exclusions in the System for Award Management (SAM), in accordance with the OMB guidelines at 2 CFR 180 that implement Executive Orders 12549 (3 CFR part 1986 Comp., p. 189) and 12689 (3 CFR part 1989 Comp., p. 235), "Debarment and Suspension." SAM Exclusions contains the names of parties debarred, suspended, or otherwise excluded by agencies, as well as parties declared ineligible under statutory or regulatory authority other than Executive Order 12549.

Pursuant to Federal Rule (H) above, when federal funds are expended by SAISD, the vendor certifies that during the term of an award for all contracts by SAISD resulting from this procurement process, the vendor certifies that neither it nor its principals is presently debarred, suspended, proposed for debarment, declared ineligible, or voluntarily excluded from participation by any federal department or agency.

Does vendor agree? YES _____Initials of Authorized Representative of vendor

(I) *Byrd Anti-Lobbying Amendment (31 U.S.C. 1352)*—Contractors that apply or bid for an award exceeding $100,000 must file the required certification. Each tier certifies to the tier above that it will not and has not used Federal appropriated funds to pay any person or organization for influencing or attempting to influence an officer or employee of any agency, a member of Congress, officer or employee of Congress, or an employee of a member of Congress in connection with obtaining any Federal contract, grant or any other award covered by 31 U.S.C. 1352. Each tier must also disclose any lobbying with non-Federal funds that takes place in connection with obtaining any Federal award. Such disclosures are forwarded from tier to tier up to the non- Federal award.

Pursuant to Federal Rule (I) above, when federal funds are expended by SAISD, the vendor certifies that during the term and after the awarded term of an award for all contracts by SAISD resulting from this procurement process, the vendor certifies that it is in compliance with all applicable provisions of the Byrd Anti-Lobbying Amendment (31 U.S.C. 1352). The undersigned further certifies that:

(1) No Federal appropriated funds have been paid or will be paid for on behalf of the undersigned, to any person for influencing or attempting to influence an officer or employee of any agency, a Member of Congress, an officer or employee of congress, or an employee of a Member of Congress in connection with the awarding of a Federal contract, the making of a Federal grant, the making of a Federal loan, the entering into a cooperative agreement, and the extension, continuation, renewal, amendment, or modification of a Federal contract, grant, loan, or cooperative agreement.

(2) If any funds other than Federal appropriated funds have been paid or will be paid to any person for influencing or attempting to influence an officer or employee of any agency, a Member of Congress, an officer or employee of congress, or an employee of a Member of Congress in connection with this Federal grant or cooperative agreement, the undersigned shall complete and submit Standard Form-LLL, "Disclosure Form to Report Lobbying", in accordance with its instructions.

(3) The undersigned shall require that the language of this certification be included in the award documents for all covered sub-awards exceeding $100,000 in Federal funds at all appropriate tiers and that all subrecipients shall certify and disclose accordingly.

Does vendor agree? YES_____Initials of Authorized Representative of vendor

RECORD RETENTION REQUIREMENTS FOR CONTRACTS PAID FOR WITH FEDERAL FUNDS – 2 CFR § 200.333

When federal funds are expended by SAISD for any contract resulting from this procurement process, the vendor certifies that it will comply with the record retention requirements detailed in 2 CFR § 200.333. The vendor further certifies that vendor will retain all records as required by 2 CFR § 200.333 for a period of three years after grantees or subgrantees submit final expenditure reports or quarterly or annual financial reports, as applicable, and all other pending matters are closed.

Does vendor agree? YES_____ Initials of Authorized Representative of vendor

---

CERTIFICATION OF NON-COLLUSION STATEMENT

Vendor certifies under penalty of perjury that its response to this procurement solicitation is in all respects bona fide, fair, and made without collusion or fraud with any person, joint venture, partnership, corporation or other business or legal entity.

Does vendor agree? YES _____ Initials of Authorized Representative of vendor

---

CERTIFICATION REGARDING BOYCOTTING CERTAIN ENERGY COMPANIES

If (a) company is not a sole proprietorship; (b) company has ten (10) or more full-time employees; and (c) this contract has a value of $100,000 or more that is to be paid wholly or partly from public funds, the following certification shall apply; otherwise, this certification is not required. Pursuant to TEX. GOV'T CODE Ch. 2274 of SB 13 (87th session), the company hereby certifies and verifies that the company, or any wholly owned subsidiary, majority-owned subsidiary, parent company, or affiliate of these entities or business associations, if any, does not boycott energy companies and will not boycott energy companies during the term of the contract. For purposes of this contract, the term "company" shall mean an organization, association, corporation, partnership, joint venture, limited partnership, limited liability partnership, or limited liability company, that exists to make a profit. The term "boycott energy company" shall mean "without an ordinary business purpose, refusing to deal with, terminating business activities with, or otherwise taking any action intended to penalize, inflict economic harm on, or limit commercial relations with a company because the company (a) engages in the exploration, production, utilization, transportation, sale, or manufacturing of fossil fuel-based energy and does not commit or pledge to meet environmental standards beyond applicable federal and state law, or (b) does business with a company described by paragraph (a)." *See* TEX. GOV'T CODE § 809.001(1).

Does vendor agree? YES_____Initials of Authorized Representative of vendor

---

CERTIFICATION PROHIBITING DISCRIMINATION AGAINST FIREARM AND AMMUNITION INDUSTRIES

If (a) company is not a sole proprietorship; (b) company has at least ten (10) full-time employees; (c) this contract has a value of at least $100,000 that is paid wholly or partly from public funds; (d) the contract is not excepted under TEX. GOV'T CODE § 2274.003 of SB 19 (87th leg.); and (e) governmental entity has determined that company is not a sole-source provider or governmental entity has not received any bids from a company that is able to provide this written verification, the following certification shall apply; otherwise, this certification is not required. Pursuant to TEX. GOV'T CODE Ch. 2274 of SB 19 (87th session), the company hereby certifies and verifies that the company, or association, corporation, partnership, joint venture, limited partnership, limited liability partnership, or limited liability company, including a wholly owned subsidiary, majority-owned subsidiary parent company, or affiliate of these entities or associations, that exists to make a profit, does not have a practice, policy, guidance, or directive that discriminates against a firearm entity or firearm trade association and will not discriminate during the term of this contract against a firearm entity or firearm trade association. For purposes of this contract, "discriminate against a firearm entity or firearm trade association" shall mean, with respect to the entity or association, to: "(1) refuse to engage in the trade of any goods or services with the entity or association based solely on its status as a firearm entity or firearm trade association; (2) refrain from continuing an existing business relationship with the entity or association based solely on its status as a firearm entity or firearm trade association; or (3) terminate an existing business relationship with the entity or association based solely on its status as a firearm entity or firearm trade association. *See* TEX. GOV'T CODE § 2274.001(3) of SB 19. "Discrimination against a firearm entity or firearm trade association" does not include: "(1) the established policies of a merchant, retail seller, or platform that restrict or prohibit the listing or selling of ammunition, firearms, or firearm accessories; and (2) a company's refusal to engage in the trade of any goods or services, decision to refrain from continuing an existing business relationship, or decision to terminate an existing business relationship to comply with federal, state, or local law, policy, or regulations or a directive by a regulatory agency, or for any traditional business reason that is specific to the customer or potential customer and not based solely on an entity's or association's status as a firearm entity or firearm trade association." *See* TEX. GOV'T CODE § 2274.001(3) of SB 19.

Does vendor agree? YES _____ Initials of Authorized Representative of vendor

---

CERTIFICATION REGARDING CERTAIN FOREIGN-OWNED COMPANIES IN CONNECTION WITH CRITICAL INFRASTRUCTURE

Vendor is prohibited from entering into a contract or other agreement relating to critical infrastructure that would grant to the company direct or remote access to or control of critical infrastructure in this state, excluding access specifically allowed by the *vendor* for product warranty and support purposes. Company, certifies that neither it nor its parent company nor any affiliate of company or its parent company, is (1) owned by or the majority of stock or other ownership interest of the company is held or controlled by individuals who are citizens of China, Iran, North Korea, Russia, or a designated country; (2) a company or other entity, including governmental entity, that is owned or controlled by citizens of or is directly controlled by the government of China, Iran, North Korea, Russia, or a designated country; or (3) headquartered in China, Iran, North Korea, Russia, or a designated country. For purposes of this contract, "critical infrastructure" means "a communication infrastructure system, cybersecurity system, electric grid, hazardous waste treatment system, or water treatment facility." *See* TEX. GOV'T CODE § 2274.0101(2) of SB 1226 (87th leg.). The company verifies and certifies that company will not grant direct or remote access to or control of critical infrastructure, except for product warranty and support purposes, to prohibited individuals, companies, or entities, including governmental entities, owned, controlled, or headquartered in China, Iran, North Korea, Russia, or a designated country, as determined by the Governor.

Does vendor agree? YES_____Initials of Authorized Representative of vendor

San Angelo Independent School District

Purchasing Department

Vendor agrees to comply with all federal, state, and local laws, rules, regulations and ordinances, as applicable. It is further acknowledged that vendor certifies compliance with all provisions, laws, acts, regulations, etc. as specifically noted above.

Vendor's Name/Company Name:_____

Address, City, State, and Zip Code:_____

Phone Number:_____ Fax Number: _____

Printed Name of Authorized Representative: _____

Title of Authorized Representative: _____ _

Email_____

Address: _____

Signature of Authorized Representative: _____

Date: _____

FORMS CHECKLIST

_____ Completed – Form A - Non-Collusion Statement, 1 Page

_____ Completed – Form B - Felony Conviction Notice, 1 Page

_____ Completed – Form C - Bidders Certification, 1 Page

_____ Completed – Form D - Debarment and Suspension Certification, 1 Page

_____ Completed – Form E - Deviation/Compliance, 1 Page

_____ Complete if Applicable - Form F - No Bid Notification, 1 Page

_____ Completed – Certification Packet, 6 pages

_____ Completed – W-9 – Request for Taxpayer Identification Number

Form **W-9**
(Rev. March 2024)
Department of the Treasury
Internal Revenue Service

Request for Taxpayer Identification Number and Certification

Go to *www.irs.gov/FormW9* for instructions and the latest information.

Give form to the requester. Do not send to the IRS.

Before you begin. For guidance related to the purpose of Form W-9, see *Purpose of Form*, below.

Print or type. See ***Specific Instructions*** on page 3.

1 Name of entity/individual. An entry is required. (For a sole proprietor or disregarded entity, enter the owner's name on line 1, and enter the business/disregarded entity's name on line 2.)

2 Business name/disregarded entity name, if different from above.

3a Check the appropriate box for federal tax classification of the entity/individual whose name is entered on line 1. Check only **one** of the following seven boxes.

☐ Individual/sole proprietor ☐ C corporation ☐ S corporation ☐ Partnership ☐ Trust/estate

☐ LLC. Enter the tax classification (C = C corporation, S = S corporation, P = Partnership) . . . . _____

Note: Check the "LLC" box above and, in the entry space, enter the appropriate code (C, S, or P) for the tax classification of the LLC, unless it is a disregarded entity. A disregarded entity should instead check the appropriate box for the tax classification of its owner.

☐ Other (see instructions) _____

3b If on line 3a you checked "Partnership" or "Trust/estate," or checked "LLC" and entered "P" as its tax classification, and you are providing this form to a partnership, trust, or estate in which you have an ownership interest, check this box if you have any foreign partners, owners, or beneficiaries. See instructions . . . . . ☐

4 Exemptions (codes apply only to certain entities, not individuals; see instructions on page 3):

Exempt payee code (if any) _____

Exemption from Foreign Account Tax Compliance Act (FATCA) reporting code (if any) _____

(Applies to accounts maintained outside the United States.)

5 Address (number, street, and apt. or suite no.). See instructions.

Requester's name and address (optional)

6 City, state, and ZIP code

7 List account number(s) here (optional)

Part I Taxpayer Identification Number (TIN)

Enter your TIN in the appropriate box. The TIN provided must match the name given on line 1 to avoid backup withholding. For individuals, this is generally your social security number (SSN). However, for a resident alien, sole proprietor, or disregarded entity, see the instructions for Part I, later. For other entities, it is your employer identification number (EIN). If you do not have a number, see *How to get a TIN*, later.

Note: If the account is in more than one name, see the instructions for line 1. See also *What Name and Number To Give the Requester* for guidelines on whose number to enter.

Social security number

☐☐☐ – ☐☐ – ☐☐☐☐

or

Employer identification number

☐☐ – ☐☐☐☐☐☐☐

Part II Certification

Under penalties of perjury, I certify that:

1. The number shown on this form is my correct taxpayer identification number (or I am waiting for a number to be issued to me); and
2. I am not subject to backup withholding because (a) I am exempt from backup withholding, or (b) I have not been notified by the Internal Revenue Service (IRS) that I am subject to backup withholding as a result of a failure to report all interest or dividends, or (c) the IRS has notified me that I am no longer subject to backup withholding; and
3. I am a U.S. citizen or other U.S. person (defined below); and
4. The FATCA code(s) entered on this form (if any) indicating that I am exempt from FATCA reporting is correct.

Certification instructions. You must cross out item 2 above if you have been notified by the IRS that you are currently subject to backup withholding because you have failed to report all interest and dividends on your tax return. For real estate transactions, item 2 does not apply. For mortgage interest paid, acquisition or abandonment of secured property, cancellation of debt, contributions to an individual retirement arrangement (IRA), and, generally, payments other than interest and dividends, you are not required to sign the certification, but you must provide your correct TIN. See the instructions for Part II, later.

Sign Here **Signature of U.S. person** **Date**

General Instructions

Section references are to the Internal Revenue Code unless otherwise noted.

Future developments. For the latest information about developments related to Form W-9 and its instructions, such as legislation enacted after they were published, go to *www.irs.gov/FormW9*.

What's New

Line 3a has been modified to clarify how a disregarded entity completes this line. An LLC that is a disregarded entity should check the appropriate box for the tax classification of its owner. Otherwise, it should check the "LLC" box and enter its appropriate tax classification.

New line 3b has been added to this form. A flow-through entity is required to complete this line to indicate that it has direct or indirect foreign partners, owners, or beneficiaries when it provides the Form W-9 to another flow-through entity in which it has an ownership interest. This change is intended to provide a flow-through entity with information regarding the status of its indirect foreign partners, owners, or beneficiaries, so that it can satisfy any applicable reporting requirements. For example, a partnership that has any indirect foreign partners may be required to complete Schedules K-2 and K-3. See the Partnership Instructions for Schedules K-2 and K-3 (Form 1065).

Purpose of Form

An individual or entity (Form W-9 requester) who is required to file an information return with the IRS is giving you this form because they

must obtain your correct taxpayer identification number (TIN), which may be your social security number (SSN), individual taxpayer identification number (ITIN), adoption taxpayer identification number (ATIN), or employer identification number (EIN), to report on an information return the amount paid to you, or other amount reportable on an information return. Examples of information returns include, but are not limited to, the following.

• Form 1099-INT (interest earned or paid).

• Form 1099-DIV (dividends, including those from stocks or mutual funds).

• Form 1099-MISC (various types of income, prizes, awards, or gross proceeds).

• Form 1099-NEC (nonemployee compensation).

• Form 1099-B (stock or mutual fund sales and certain other transactions by brokers).

• Form 1099-S (proceeds from real estate transactions).

• Form 1099-K (merchant card and third-party network transactions).

• Form 1098 (home mortgage interest), 1098-E (student loan interest), and 1098-T (tuition).

• Form 1099-C (canceled debt).

• Form 1099-A (acquisition or abandonment of secured property).

Use Form W-9 only if you are a U.S. person (including a resident alien), to provide your correct TIN.

Caution: If you don't return Form W-9 to the requester with a TIN, you might be subject to backup withholding. See *What is backup withholding*, later.

By signing the filled-out form, you:

1. Certify that the TIN you are giving is correct (or you are waiting for a number to be issued);

2. Certify that you are not subject to backup withholding; or

3. Claim exemption from backup withholding if you are a U.S. exempt payee; and

4. Certify to your non-foreign status for purposes of withholding under chapter 3 or 4 of the Code (if applicable); and

5. Certify that FATCA code(s) entered on this form (if any) indicating that you are exempt from the FATCA reporting is correct. See *What Is FATCA Reporting*, later, for further information.

Note: If you are a U.S. person and a requester gives you a form other than Form W-9 to request your TIN, you must use the requester's form if it is substantially similar to this Form W-9.

Definition of a U.S. person. For federal tax purposes, you are considered a U.S. person if you are:

• An individual who is a U.S. citizen or U.S. resident alien;

• A partnership, corporation, company, or association created or organized in the United States or under the laws of the United States;

• An estate (other than a foreign estate); or

• A domestic trust (as defined in Regulations section 301.7701-7).

Establishing U.S. status for purposes of chapter 3 and chapter 4 withholding. Payments made to foreign persons, including certain distributions, allocations of income, or transfers of sales proceeds, may be subject to withholding under chapter 3 or chapter 4 of the Code (sections 1441–1474). Under those rules, if a Form W-9 or other certification of non-foreign status has not been received, a withholding agent, transferee, or partnership (payor) generally applies presumption rules that may require the payor to withhold applicable tax from the recipient, owner, transferor, or partner (payee). See Pub. 515, Withholding of Tax on Nonresident Aliens and Foreign Entities.

The following persons must provide Form W-9 to the payor for purposes of establishing its non-foreign status.

• In the case of a disregarded entity with a U.S. owner, the U.S. owner of the disregarded entity and not the disregarded entity.

• In the case of a grantor trust with a U.S. grantor or other U.S. owner, generally, the U.S. grantor or other U.S. owner of the grantor trust and not the grantor trust.

• In the case of a U.S. trust (other than a grantor trust), the U.S. trust and not the beneficiaries of the trust.

See Pub. 515 for more information on providing a Form W-9 or a certification of non-foreign status to avoid withholding.

Foreign person. If you are a foreign person or the U.S. branch of a foreign bank that has elected to be treated as a U.S. person (under Regulations section 1.1441-1(b)(2)(iv) or other applicable section for chapter 3 or 4 purposes), do not use Form W-9. Instead, use the appropriate Form W-8 or Form 8233 (see Pub. 515). If you are a qualified foreign pension fund under Regulations section 1.897(l)-1(d), or a partnership that is wholly owned by qualified foreign pension funds, that is treated as a non-foreign person for purposes of section 1445 withholding, do not use Form W-9. Instead, use Form W-8EXP (or other certification of non-foreign status).

Nonresident alien who becomes a resident alien. Generally, only a nonresident alien individual may use the terms of a tax treaty to reduce or eliminate U.S. tax on certain types of income. However, most tax treaties contain a provision known as a saving clause. Exceptions specified in the saving clause may permit an exemption from tax to continue for certain types of income even after the payee has otherwise become a U.S. resident alien for tax purposes.

If you are a U.S. resident alien who is relying on an exception contained in the saving clause of a tax treaty to claim an exemption from U.S. tax on certain types of income, you must attach a statement to Form W-9 that specifies the following five items.

1. The treaty country. Generally, this must be the same treaty under which you claimed exemption from tax as a nonresident alien.

2. The treaty article addressing the income.

3. The article number (or location) in the tax treaty that contains the saving clause and its exceptions.

4. The type and amount of income that qualifies for the exemption from tax.

5. Sufficient facts to justify the exemption from tax under the terms of the treaty article.

Example. Article 20 of the U.S.-China income tax treaty allows an exemption from tax for scholarship income received by a Chinese student temporarily present in the United States. Under U.S. law, this student will become a resident alien for tax purposes if their stay in the United States exceeds 5 calendar years. However, paragraph 2 of the first Protocol to the U.S.-China treaty (dated April 30, 1984) allows the provisions of Article 20 to continue to apply even after the Chinese student becomes a resident alien of the United States. A Chinese student who qualifies for this exception (under paragraph 2 of the first Protocol) and is relying on this exception to claim an exemption from tax on their scholarship or fellowship income would attach to Form W-9 a statement that includes the information described above to support that exemption.

If you are a nonresident alien or a foreign entity, give the requester the appropriate completed Form W-8 or Form 8233.

Backup Withholding

What is backup withholding? Persons making certain payments to you must under certain conditions withhold and pay to the IRS 24% of such payments. This is called "backup withholding." Payments that may be subject to backup withholding include, but are not limited to, interest, tax-exempt interest, dividends, broker and barter exchange transactions, rents, royalties, nonemployee pay, payments made in settlement of payment card and third-party network transactions, and certain payments from fishing boat operators. Real estate transactions are not subject to backup withholding.

You will not be subject to backup withholding on payments you receive if you give the requester your correct TIN, make the proper certifications, and report all your taxable interest and dividends on your tax return.

Payments you receive will be subject to backup withholding if:

1. You do not furnish your TIN to the requester;

2. You do not certify your TIN when required (see the instructions for Part II for details);

3. The IRS tells the requester that you furnished an incorrect TIN;

4. The IRS tells you that you are subject to backup withholding because you did not report all your interest and dividends on your tax return (for reportable interest and dividends only); or

5. You do not certify to the requester that you are not subject to backup withholding, as described in item 4 under "*By signing the filled-out form*" above (for reportable interest and dividend accounts opened after 1983 only).

Certain payees and payments are exempt from backup withholding. See *Exempt payee code*, later, and the separate Instructions for the Requester of Form W-9 for more information.

See also *Establishing U.S. status for purposes of chapter 3 and chapter 4 withholding*, earlier.

What Is FATCA Reporting?

The Foreign Account Tax Compliance Act (FATCA) requires a participating foreign financial institution to report all U.S. account holders that are specified U.S. persons. Certain payees are exempt from FATCA reporting. See *Exemption from FATCA reporting code*, later, and the Instructions for the Requester of Form W-9 for more information.

Updating Your Information

You must provide updated information to any person to whom you claimed to be an exempt payee if you are no longer an exempt payee and anticipate receiving reportable payments in the future from this person. For example, you may need to provide updated information if you are a C corporation that elects to be an S corporation, or if you are no longer tax exempt. In addition, you must furnish a new Form W-9 if the name or TIN changes for the account, for example, if the grantor of a grantor trust dies.

Penalties

Failure to furnish TIN. If you fail to furnish your correct TIN to a requester, you are subject to a penalty of $50 for each such failure unless your failure is due to reasonable cause and not to willful neglect.

Civil penalty for false information with respect to withholding. If you make a false statement with no reasonable basis that results in no backup withholding, you are subject to a $500 penalty.

Criminal penalty for falsifying information. Willfully falsifying certifications or affirmations may subject you to criminal penalties including fines and/or imprisonment.

Misuse of TINs. If the requester discloses or uses TINs in violation of federal law, the requester may be subject to civil and criminal penalties.

Specific Instructions

Line 1

You must enter one of the following on this line; **do not** leave this line blank. The name should match the name on your tax return.

If this Form W-9 is for a joint account (other than an account maintained by a foreign financial institution (FFI)), list first, and then circle, the name of the person or entity whose number you entered in Part I of Form W-9. If you are providing Form W-9 to an FFI to document a joint account, each holder of the account that is a U.S. person must provide a Form W-9.

• **Individual.** Generally, enter the name shown on your tax return. If you have changed your last name without informing the Social Security Administration (SSA) of the name change, enter your first name, the last name as shown on your social security card, and your new last name.

Note for ITIN applicant: Enter your individual name as it was entered on your Form W-7 application, line 1a. This should also be the same as the name you entered on the Form 1040 you filed with your application.

• **Sole proprietor.** Enter your individual name as shown on your Form 1040 on line 1. Enter your business, trade, or "doing business as" (DBA) name on line 2.

• **Partnership, C corporation, S corporation, or LLC, other than a disregarded entity.** Enter the entity's name as shown on the entity's tax return on line 1 and any business, trade, or DBA name on line 2.

• **Other entities.** Enter your name as shown on required U.S. federal tax documents on line 1. This name should match the name shown on the charter or other legal document creating the entity. Enter any business, trade, or DBA name on line 2.

• **Disregarded entity.** In general, a business entity that has a single owner, including an LLC, and is not a corporation, is disregarded as an entity separate from its owner (a disregarded entity). See Regulations section 301.7701-2(c)(2). A disregarded entity should check the appropriate box for the tax classification of its owner. Enter the owner's name on line 1. The name of the owner entered on line 1 should never be a disregarded entity. The name on line 1 should be the name shown on the income tax return on which the income should be reported. For example, if a foreign LLC that is treated as a disregarded entity for U.S. federal tax purposes has a single owner that is a U.S. person, the U.S. owner's name is required to be provided on line 1. If the direct owner of the entity is also a disregarded entity, enter the first owner that is not disregarded for federal tax purposes. Enter the disregarded entity's name on line 2. If the owner of the disregarded entity is a foreign person, the owner must complete an appropriate Form W-8 instead of a Form W-9. This is the case even if the foreign person has a U.S. TIN.

Line 2

If you have a business name, trade name, DBA name, or disregarded entity name, enter it on line 2.

Line 3a

Check the appropriate box on line 3a for the U.S. federal tax classification of the person whose name is entered on line 1. Check only one box on line 3a.

IF the entity/individual on line 1 is a(n) . . .	THEN check the box for . . .
• Corporation	Corporation.
• Individual or • Sole proprietorship	Individual/sole proprietor.
• LLC classified as a partnership for U.S. federal tax purposes or • LLC that has filed Form 8832 or 2553 electing to be taxed as a corporation	Limited liability company and enter the appropriate tax classification: P = Partnership, C = C corporation, or S = S corporation.
• Partnership	Partnership.
• Trust/estate	Trust/estate.

Line 3b

Check this box if you are a partnership (including an LLC classified as a partnership for U.S. federal tax purposes), trust, or estate that has any foreign partners, owners, or beneficiaries, and you are providing this form to a partnership, trust, or estate, in which you have an ownership interest. You must check the box on line 3b if you receive a Form W-8 (or documentary evidence) from any partner, owner, or beneficiary establishing foreign status or if you receive a Form W-9 from any partner, owner, or beneficiary that has checked the box on line 3b.

Note: A partnership that provides a Form W-9 and checks box 3b may be required to complete Schedules K-2 and K-3 (Form 1065). For more information, see the Partnership Instructions for Schedules K-2 and K-3 (Form 1065).

If you are required to complete line 3b but fail to do so, you may not receive the information necessary to file a correct information return with the IRS or furnish a correct payee statement to your partners or beneficiaries. See, for example, sections 6698, 6722, and 6724 for penalties that may apply.

Line 4 Exemptions

If you are exempt from backup withholding and/or FATCA reporting, enter in the appropriate space on line 4 any code(s) that may apply to you.

Exempt payee code.

• Generally, individuals (including sole proprietors) are not exempt from backup withholding.

• Except as provided below, corporations are exempt from backup withholding for certain payments, including interest and dividends.

• Corporations are not exempt from backup withholding for payments made in settlement of payment card or third-party network transactions.

• Corporations are not exempt from backup withholding with respect to attorneys' fees or gross proceeds paid to attorneys, and corporations that provide medical or health care services are not exempt with respect to payments reportable on Form 1099-MISC.

The following codes identify payees that are exempt from backup withholding. Enter the appropriate code in the space on line 4.

1—An organization exempt from tax under section 501(a), any IRA, or a custodial account under section 403(b)(7) if the account satisfies the requirements of section 401(f)(2).

2—The United States or any of its agencies or instrumentalities.

3—A state, the District of Columbia, a U.S. commonwealth or territory, or any of their political subdivisions or instrumentalities.

4—A foreign government or any of its political subdivisions, agencies, or instrumentalities.

5—A corporation.

6—A dealer in securities or commodities required to register in the United States, the District of Columbia, or a U.S. commonwealth or territory.

7—A futures commission merchant registered with the Commodity Futures Trading Commission.

8—A real estate investment trust.

9—An entity registered at all times during the tax year under the Investment Company Act of 1940.

10—A common trust fund operated by a bank under section 584(a).

11—A financial institution as defined under section 581.

12—A middleman known in the investment community as a nominee or custodian.

13—A trust exempt from tax under section 664 or described in section 4947.

The following chart shows types of payments that may be exempt from backup withholding. The chart applies to the exempt payees listed above, 1 through 13.

IF the payment is for . . .	THEN the payment is exempt for . . .
• Interest and dividend payments	All exempt payees except for 7.
• Broker transactions	Exempt payees 1 through 4 and 6 through 11 and all C corporations. S corporations must not enter an exempt payee code because they are exempt only for sales of noncovered securities acquired prior to 2012.
• Barter exchange transactions and patronage dividends	Exempt payees 1 through 4.
• Payments over $600 required to be reported and direct sales over $5,000[1]	Generally, exempt payees 1 through 5.[2]
• Payments made in settlement of payment card or third-party network transactions	Exempt payees 1 through 4.

[1] See Form 1099-MISC, Miscellaneous Information, and its instructions.

[2] However, the following payments made to a corporation and reportable on Form 1099-MISC are not exempt from backup withholding: medical and health care payments, attorneys' fees, gross proceeds paid to an attorney reportable under section 6045(f), and payments for services paid by a federal executive agency.

Exemption from FATCA reporting code. The following codes identify payees that are exempt from reporting under FATCA. These codes apply to persons submitting this form for accounts maintained outside of the United States by certain foreign financial institutions. Therefore, if you are only submitting this form for an account you hold in the United States, you may leave this field blank. Consult with the person requesting this form if you are uncertain if the financial institution is subject to these requirements. A requester may indicate that a code is not required by providing you with a Form W-9 with "Not Applicable" (or any similar indication) entered on the line for a FATCA exemption code.

A—An organization exempt from tax under section 501(a) or any individual retirement plan as defined in section 7701(a)(37).

B—The United States or any of its agencies or instrumentalities.

C—A state, the District of Columbia, a U.S. commonwealth or territory, or any of their political subdivisions or instrumentalities.

D—A corporation the stock of which is regularly traded on one or more established securities markets, as described in Regulations section 1.1472-1(c)(1)(i).

E—A corporation that is a member of the same expanded affiliated group as a corporation described in Regulations section 1.1472-1(c)(1)(i).

F—A dealer in securities, commodities, or derivative financial instruments (including notional principal contracts, futures, forwards, and options) that is registered as such under the laws of the United States or any state.

G—A real estate investment trust.

H—A regulated investment company as defined in section 851 or an entity registered at all times during the tax year under the Investment Company Act of 1940.

I—A common trust fund as defined in section 584(a).

J—A bank as defined in section 581.

K—A broker.

L—A trust exempt from tax under section 664 or described in section 4947(a)(1).

M—A tax-exempt trust under a section 403(b) plan or section 457(g) plan.

Note: You may wish to consult with the financial institution requesting this form to determine whether the FATCA code and/or exempt payee code should be completed.

Line 5

Enter your address (number, street, and apartment or suite number). This is where the requester of this Form W-9 will mail your information returns. If this address differs from the one the requester already has on file, enter "NEW" at the top. If a new address is provided, there is still a chance the old address will be used until the payor changes your address in their records.

Line 6

Enter your city, state, and ZIP code.

Part I. Taxpayer Identification Number (TIN)

Enter your TIN in the appropriate box. If you are a resident alien and you do not have, and are not eligible to get, an SSN, your TIN is your IRS ITIN. Enter it in the entry space for the Social security number. If you do not have an ITIN, see *How to get a TIN* below.

If you are a sole proprietor and you have an EIN, you may enter either your SSN or EIN.

If you are a single-member LLC that is disregarded as an entity separate from its owner, enter the owner's SSN (or EIN, if the owner has one). If the LLC is classified as a corporation or partnership, enter the entity's EIN.

Note: See *What Name and Number To Give the Requester*, later, for further clarification of name and TIN combinations.

How to get a TIN. If you do not have a TIN, apply for one immediately. To apply for an SSN, get Form SS-5, Application for a Social Security Card, from your local SSA office or get this form online at *www.SSA.gov*. You may also get this form by calling 800-772-1213. Use Form W-7, Application for IRS Individual Taxpayer Identification Number, to apply for an ITIN, or Form SS-4, Application for Employer Identification Number, to apply for an EIN. You can apply for an EIN online by accessing the IRS website at *www.irs.gov/EIN*. Go to *www.irs.gov/Forms* to view, download, or print Form W-7 and/or Form SS-4. Or, you can go to *www.irs.gov/OrderForms* to place an order and have Form W-7 and/or Form SS-4 mailed to you within 15 business days.

If you are asked to complete Form W-9 but do not have a TIN, apply for a TIN and enter "Applied For" in the space for the TIN, sign and date the form, and give it to the requester. For interest and dividend payments, and certain payments made with respect to readily tradable instruments, you will generally have 60 days to get a TIN and give it to the requester before you are subject to backup withholding on payments. The 60-day rule does not apply to other types of payments. You will be subject to backup withholding on all such payments until you provide your TIN to the requester.

Note: Entering "Applied For" means that you have already applied for a TIN or that you intend to apply for one soon. See also *Establishing U.S. status for purposes of chapter 3 and chapter 4 withholding*, earlier, for when you may instead be subject to withholding under chapter 3 or 4 of the Code.

Caution: A disregarded U.S. entity that has a foreign owner must use the appropriate Form W-8.

Part II. Certification

To establish to the withholding agent that you are a U.S. person, or resident alien, sign Form W-9. You may be requested to sign by the withholding agent even if item 1, 4, or 5 below indicates otherwise.

For a joint account, only the person whose TIN is shown in Part I should sign (when required). In the case of a disregarded entity, the person identified on line 1 must sign. Exempt payees, see *Exempt payee code*, earlier.

Signature requirements. Complete the certification as indicated in items 1 through 5 below.

1. Interest, dividend, and barter exchange accounts opened before 1984 and broker accounts considered active during 1983. You must give your correct TIN, but you do not have to sign the certification.

2. Interest, dividend, broker, and barter exchange accounts opened after 1983 and broker accounts considered inactive during 1983. You must sign the certification or backup withholding will apply. If you are subject to backup withholding and you are merely providing your correct TIN to the requester, you must cross out item 2 in the certification before signing the form.

3. Real estate transactions. You must sign the certification. You may cross out item 2 of the certification.

4. Other payments. You must give your correct TIN, but you do not have to sign the certification unless you have been notified that you have previously given an incorrect TIN. "Other payments" include payments made in the course of the requester's trade or business for rents, royalties, goods (other than bills for merchandise), medical and health care services (including payments to corporations), payments to a nonemployee for services, payments made in settlement of payment card and third-party network transactions, payments to certain fishing boat crew members and fishermen, and gross proceeds paid to attorneys (including payments to corporations).

5. Mortgage interest paid by you, acquisition or abandonment of secured property, cancellation of debt, qualified tuition program payments (under section 529), ABLE accounts (under section 529A), IRA, Coverdell ESA, Archer MSA or HSA contributions or distributions, and pension distributions. You must give your correct TIN, but you do not have to sign the certification.

What Name and Number To Give the Requester

For this type of account:	Give name and SSN of:
1. Individual	The individual
2. Two or more individuals (joint account) other than an account maintained by an FFI	The actual owner of the account or, if combined funds, the first individual on the account[1]
3. Two or more U.S. persons (joint account maintained by an FFI)	Each holder of the account
4. Custodial account of a minor (Uniform Gift to Minors Act)	The minor[2]
5. a. The usual revocable savings trust (grantor is also trustee)	The grantor-trustee[1]
b. So-called trust account that is not a legal or valid trust under state law	The actual owner[1]
6. Sole proprietorship or disregarded entity owned by an individual	The owner[3]
7. Grantor trust filing under Optional Filing Method 1 (see Regulations section 1.671-4(b)(2)(i)(A))**	The grantor*
8. Disregarded entity not owned by an individual	The owner
9. A valid trust, estate, or pension trust	Legal entity[4]
10. Corporation or LLC electing corporate status on Form 8832 or Form 2553	The corporation
11. Association, club, religious, charitable, educational, or other tax-exempt organization	The organization
12. Partnership or multi-member LLC	The partnership
13. A broker or registered nominee	The broker or nominee
14. Account with the Department of Agriculture in the name of a public entity (such as a state or local government, school district, or prison) that receives agricultural program payments	The public entity
15. Grantor trust filing Form 1041 or under the Optional Filing Method 2, requiring Form 1099 (see Regulations section 1.671-4(b)(2)(i)(B))**	The trust

[1] List first and circle the name of the person whose number you furnish. If only one person on a joint account has an SSN, that person's number must be furnished.

[2] Circle the minor's name and furnish the minor's SSN.

[3] You must show your individual name on line 1, and enter your business or DBA name, if any, on line 2. You may use either your SSN or EIN (if you have one), but the IRS encourages you to use your SSN.

[4] List first and circle the name of the trust, estate, or pension trust. (Do not furnish the TIN of the personal representative or trustee unless the legal entity itself is not designated in the account title.)

* **Note:** The grantor must also provide a Form W-9 to the trustee of the trust.

** For more information on optional filing methods for grantor trusts, see the Instructions for Form 1041.

Note: If no name is circled when more than one name is listed, the number will be considered to be that of the first name listed.

Secure Your Tax Records From Identity Theft

Identity theft occurs when someone uses your personal information, such as your name, SSN, or other identifying information, without your permission to commit fraud or other crimes. An identity thief may use your SSN to get a job or may file a tax return using your SSN to receive a refund.

To reduce your risk:

- Protect your SSN,
- Ensure your employer is protecting your SSN, and
- Be careful when choosing a tax return preparer.

If your tax records are affected by identity theft and you receive a notice from the IRS, respond right away to the name and phone number printed on the IRS notice or letter.

If your tax records are not currently affected by identity theft but you think you are at risk due to a lost or stolen purse or wallet, questionable credit card activity, or a questionable credit report, contact the IRS Identity Theft Hotline at 800-908-4490 or submit Form 14039.

For more information, see Pub. 5027, Identity Theft Information for Taxpayers.

Victims of identity theft who are experiencing economic harm or a systemic problem, or are seeking help in resolving tax problems that have not been resolved through normal channels, may be eligible for Taxpayer Advocate Service (TAS) assistance. You can reach TAS by calling the TAS toll-free case intake line at 877-777-4778 or TTY/TDD 800-829-4059.

Protect yourself from suspicious emails or phishing schemes. Phishing is the creation and use of email and websites designed to mimic legitimate business emails and websites. The most common act is sending an email to a user falsely claiming to be an established legitimate enterprise in an attempt to scam the user into surrendering private information that will be used for identity theft.

The IRS does not initiate contacts with taxpayers via emails. Also, the IRS does not request personal detailed information through email or ask taxpayers for the PIN numbers, passwords, or similar secret access information for their credit card, bank, or other financial accounts.

If you receive an unsolicited email claiming to be from the IRS, forward this message to *phishing@irs.gov*. You may also report misuse of the IRS name, logo, or other IRS property to the Treasury Inspector General for Tax Administration (TIGTA) at 800-366-4484. You can forward suspicious emails to the Federal Trade Commission at *spam@uce.gov* or report them at *www.ftc.gov/complaint*. You can contact the FTC at *www.ftc.gov/idtheft* or 877-IDTHEFT (877-438-4338). If you have been the victim of identity theft, see *www.IdentityTheft.gov* and Pub. 5027.

Go to *www.irs.gov/IdentityTheft* to learn more about identity theft and how to reduce your risk.

Privacy Act Notice

Section 6109 of the Internal Revenue Code requires you to provide your correct TIN to persons (including federal agencies) who are required to file information returns with the IRS to report interest, dividends, or certain other income paid to you; mortgage interest you paid; the acquisition or abandonment of secured property; the cancellation of debt; or contributions you made to an IRA, Archer MSA, or HSA. The person collecting this form uses the information on the form to file information returns with the IRS, reporting the above information. Routine uses of this information include giving it to the Department of Justice for civil and criminal litigation and to cities, states, the District of Columbia, and U.S. commonwealths and territories for use in administering their laws. The information may also be disclosed to other countries under a treaty, to federal and state agencies to enforce civil and criminal laws, or to federal law enforcement and intelligence agencies to combat terrorism. You must provide your TIN whether or not you are required to file a tax return. Under section 3406, payors must generally withhold a percentage of taxable interest, dividends, and certain other payments to a payee who does not give a TIN to the payor. Certain penalties may also apply for providing false or fraudulent information.