March 3, 2026

Rainforth Grau Architects Project No. 2022-1545.00
PTN: 68585-238

ADDENDUM NO. 1

Henderson Elementary School - Lunch Shelter
Lodi, California
Lodi Unified School District

RGA, a studio of HMC Architects

1. ALL WORKMANSHIP, MATERIALS, APPLIANCES AND EQUIPMENT which may be included in the following items shall be the same relative quantity as described for similar work set forth in the original or main specifications of which these Addendum items shall be considered a part.

2. ADDENDUM SECTIONS (included with this Addendum)

   The following modify or supplement the issued bid documents.

   Section 13 34 00 – ADD 13 34 00, FABRICATED ENGINEERED STRUCTURES

3. ADDENDUM DRAWINGS (included with this Addendum)

   The following modify or supplement the issued bid documents.

   AD 1.01 ADD Sheet A1.1.2
   AD 1.02 ADD Sheet LS1.0
   AD 1.03 ADD Sheet LS1.1
   AD 1.04 ADD Sheet LS1.2
   AD 1.05 ADD Sheet LS1.3
   AD 1.06 ADD Sheet LS3.0
   AD 1.07 ADD Sheet LS3.1
   AD 1.08 ADD Sheet LS3.4

4. PROJECT MANUAL
   A. Section 00 11 16, Notice to Bidders
      1. Article 2: Add note, “Include full removal of concrete foundations, stairs, and any other building utilities that are in the way of the new shade shelter at VRA/Independence @ Henderson. Also, remove gas stub to dead end in a box in a safe area outside project area, coordinating with PG&E and the District.”
   B. Section 13 34 00, Fabricated Engineered Structures
      1. ADD Section 13 34 00 included with this addendum.
5. DRAWINGS
   A. Sheet A1.1.0, Site Plan and Code Information:
      1. Detail 1, Site Plan: Add light post to be connected from Building B to be located along existing fence line approximately halfway between B and the public right of way for safe dispersal purposes. Light post to be based on Gardco ECF-S-32L-1A-NW-G2-AR-3-120-HB-IMRI3-HB-TLRPC-BZ, 120 volts, 106 Watts with 4” x 20’ straight square aluminum pole with finish to match head. Install on 24” diameter concrete post base 24” above grade with 48” embedment and (8) #5 bars vertical reinforcing steel bars and #4 (MIN.) steel hoops @ 12” o.c.”
   B. Sheet A1.1.2, Lunch Shelter Exhibit
      1. ADD Sheet AD 1.01 included with this addendum.
   C. Sheet A2.1.1, Enlarged Floor Plans and Fixture Schedule
      1. Detail 3: Add Note to read, “Additive Alternate 1: Include as an additive alternate, the full removal of existing raised floor and full removal of two additional existing urinals.”
      2. Detail 4: Add Note to read, “Additive Alternate 1: Include as an additive alternate, the repair and patching of the floor where raised floor was removed and installation of two new urinals similar to UR-1 and installation of one additional urinal screen and post.”
   D. Sheet LS1.0, General Info
      1. ADD Sheet AD 1.02 included with this addendum.
   E. Sheet LS1.1, General Info
      1. ADD Sheet AD 1.03 included with this addendum.
   F. Sheet LS1.2, DSA 103
      1. ADD Sheet AD 1.04 included with this addendum.
   G. Sheet LS1.3, DSA 103
      1. ADD Sheet AD 1.05 included with this addendum.
   H. Sheet LS3.0, 30’ Wide Rectangular Hip Foundation Plan

1. ADD Sheet AD 1.06 included with this addendum.

I. Sheet LS3.1, 30’ Wide Rectangular Hip Framing & Connection Details
   1. ADD Sheet AD 1.07 included with this addendum.

J. Sheet LS3.4, 30’ Wide Rectangular Hip Standing Seam Roofing Plan
   1. ADD Sheet AD 1.08 included with this addendum.

* * * END OF ADDENDUM * * *

SECTION 13 34 00 - FABRICATED ENGINEERED STRUCTURES

PART 1 - GENERAL

1.01 SUMMARY

A. Section Includes: Fabricated engineered structures including structural framing, secondary framing, and concrete footings of the following type :
   1. Shade structures with metal roofing panels.

1.02 PREINSTALLATION MEETINGS

A. Preinstallation Conference: Conduct conference at Project site.
   1. Review methods and procedures related to fabricated engineered structures including, but not limited to, the following:
      a. Preparatory work performed by other trades.
      b. Construction schedule. Verify availability of materials and erector's personnel, equipment, and facilities needed to make progress and avoid delays.
      c. Required tests, inspections, and certifications.
      d. Unfavorable weather and forecasted weather conditions and impact on construction schedule.
      e. Flashings, special details, drainage, penetrations, curbs, and condition of other construction that may affect the work.

1.03 ACTION SUBMITTALS

A. Product Data: For each type of fabricated engineered structure component.

B. Shop Drawings:
   1. Include plans, elevations, sections, structural connection details, and attachment details.
   2. Detail fabrication, assembly, and attachment of metal roofing panels.

C. Samples for Initial Selection: For factory-applied finishes.

1.04 INFORMATIONAL SUBMITTALS

A. Design Data Submittal:
   1. Include analysis data indicating compliance with performance requirements and design data signed and sealed by the qualified professional engineer responsible for their preparation.

B. Sample Warranties: For special warranties.

MasterSpec Copyright © 2025 by the American Institute of Architects, portions Copyright © 2025 by HMC Architects for LODI USD Henderson School Lunch Shelter. Warning: This AIA MasterSpec based document is protected by U.S. Copyright Law and International Treaties.

1.05 QUALITY ASSURANCE

A. Manufacturer Qualifications: A qualified manufacturer.
   1. Engineering Responsibility: Preparation of comprehensive engineering analysis and Shop Drawings by a professional engineer who is legally qualified to practice in jurisdiction where Project is located.

B. Erector Qualifications: An experienced erector who specializes in erecting and installing work similar in material, design, and extent to that indicated for this Project and who is acceptable to manufacturer.

C. Flashing and Sheet Metal Standard: Comply with SMACNA's "Architectural Sheet Metal Manual" unless more stringent requirements are specified or shown on Drawings.

D. Welding Qualifications: Qualify procedures and personnel according to the following:
   1. AWS D1.1/D1.1M, "Structural Welding Code - Steel."
   2. AWS D1.3, "Structural Welding Code - Sheet Steel."

E. Ready-Mix-Concrete Manufacturer Qualifications: A firm experienced in manufacturing ready-mixed concrete products and that complies with ASTM C 94/C 94M requirements for production facilities and equipment.

1.06 DELIVERY, STORAGE, AND HANDLING

A. Deliver components so as not to be damaged or deformed. Package for protection during transportation and handling.

1.07 WARRANTY

A. Special Warranty: Manufacturer and fabricator agree to repair or replace components of fabricated engineered structures that fail in materials or workmanship within specified warranty period.
   1. Failures include, but are not limited to, the following:
      a. Structural failures including framework.
      b. Deterioration of metals, metal finishes, and other materials beyond normal weathering.
   1. Fabricated Engineered Structure Warranty Period: Ten years from date of Substantial Completion.

B. Special Warranty on Panel Finishes: Manufacturer's standard form in which manufacturer agrees to repair finish or replace metal panels that show evidence of deterioration of factory-applied finishes within specified warranty period.
   1. Finish Warranty Period: 20 years from date of Substantial Completion.

MasterSpec Copyright © 2025 by the American Institute of Architects, portions Copyright © 2025 by HMC Architects for LODI USD Henderson School Lunch Shelter. Warning: This AIA MasterSpec based document is protected by U.S. Copyright Law and International Treaties.

PART 2 - PRODUCTS

2.01 MANUFACTURERS

A. Basis-of-Design Fabricated Engineered Structure: Subject to compliance with requirements, provide ICON Shelter Systems, Inc. structure assembly or comparable assembly by an approved manufacturer.

B. Source Limitations: Obtain system components, including primary and secondary framing and metal support assemblies, from single source from single manufacturer.

2.02 SYSTEM DESCRIPTION

A. Provide a complete, integrated set of mutually dependent components and assemblies that form a structure capable of withstanding structural and other loads, thermally induced movement, and exposure to weather without failure.

B. Structural Framing: Manufacturer's standard, consisting of primary frame, capable of supporting design loads.

C. Secondary-Frame Type: Manufacturer's standard purlins, joists, and girts.

D. Eave Height: As indicated on Drawings.

E. Roof Slope: As indicated on Drawings.

2.03 PERFORMANCE REQUIREMENTS

A. Structural Performance: Fabricated engineered structures shall withstand the effects of gravity loads and the following loads and stresses within limits and under conditions indicated.
   1. Design Loads: As indicated on Drawings and in accordance with DSA Pre-Check Design Criteria.
   2. Deflection Limits: No greater than the following:
      a. Purlins and Rafters: Vertical deflection as required by roofing panel manufacturer.
      b. Design secondary-framing system to accommodate deflection of primary framing and construction tolerances, and to maintain clearances at openings.

B. Seismic Performance: Fabricated engineered structures shall withstand the effects of earthquake motions determined according to ASCE/SEI 7.

C. Thermal Movements: Allow for thermal movements from ambient and surface temperature changes by preventing buckling, opening of joints, overstressing of components, failure of joint sealants, failure of connections, and other detrimental

MasterSpec Copyright © 2025 by the American Institute of Architects, portions Copyright © 2025 by HMC Architects for LODI USD Henderson School Lunch Shelter. Warning: This AIA MasterSpec based document is protected by U.S. Copyright Law and International Treaties.

effects. Base calculations on surface temperatures of materials due to both solar heat gain and nighttime-sky heat loss.
1. Temperature Change: 120 deg F, ambient; 180 deg F, material surfaces.

D. Wind-Uplift Resistance: Provide assemblies that comply with UL 580 for wind-uplift-resistance class indicated.
1. Uplift Rating: Meet performance requirements indicated in accordance with ASCE-7, but not less than UL 60.

2.04 STRUCTURAL STEEL FRAMING

A. Structural Steel: Comply with AISC 360, "Specification for Structural Steel Buildings."

B. Bolted Connections: Comply with RCSC's "Specification for Structural Joints Using High-Strength Bolts."

C. Cold-Formed Steel: Comply with AISI's "North American Specification for the Design of Cold-Formed Steel Structural Members" for design requirements and allowable stresses.

D. Primary Framing: Manufacturer's standard primary-framing system, designed to withstand required loads and specified requirements.

E. Secondary Framing: Manufacturer's standard secondary framing, including purlins, girts, eave struts, flange bracing, base members, gable angles, clips, headers, jambs, and other miscellaneous structural members. Unless otherwise indicated, fabricate framing from metallic-coated steel sheet.

F. Miscellaneous Structural Members: Manufacturer's standard sections fabricated from zinc-coated (galvanized) steel; designed to withstand required loads.

G. Steel Pipe: ASTM A53/A53M.

H. Anchors, Fasteners, Fittings, Hardware, and Installation Accessories: Complying with performance requirements indicated and suitable for exposure conditions, supporting structure, anchoring substrates, and installation methods indicated. Corrosion-resistant or noncorrodible units; weather-resistant, tamperproof, vandal- and theft-resistant, of one of the following materials:
1. Zinc coated steel.
2. Stainless steel.

I. Finish: Manufacturer's standard primed and top-coated decorative powder-coat finish complying with finish manufacturer's written instructions.

MasterSpec Copyright © 2025 by the American Institute of Architects, portions Copyright © 2025 by HMC Architects for LODI USD Henderson School Lunch Shelter. Warning: This AIA MasterSpec based document is protected by U.S. Copyright Law and International Treaties.

2.05 SHEET METAL FLASHING

A. Metallic-Coated Steel Sheet: Restricted flatness steel sheet, metallic coated by the hot-dip process and prepainted by the coil-coating process to comply with ASTM A 755/A 755M.
   1. Zinc-Coated (Galvanized) Steel Sheet: ASTM A 653/A 653M, G90 coating designation; structural quality.
   2. Exposed Finish: Fluoropolymer.
      a. Color: As indicated by manufacturer's designations.

2.06 METAL ROOF PANELS

A. Provide factory-formed metal roof panels designed to be installed by lapping side edges of adjacent panels and mechanically attaching panels to supports using exposed fasteners in side laps. Include accessories required for weathertight installation.
   1. Metallic-Coated Steel Sheet: Zinc-coated (galvanized) steel sheet complying with ASTM A653/A653M, G90 (Z275) coating designation, or aluminum-zinc alloy-coated steel sheet complying with ASTM A792/A792M, Class AZ50 (Class AZM150) coating designation; structural quality. Prepainted by the coil-coating process to comply with ASTM A755/A755M.
      a. Nominal Thickness: Manufacturers Standard.
      b. Exterior finish: Two-coat fluoropolymer.
      c. Color: As selected by Architect from Manufacturer full range.

2.07 CONCRETE MATERIALS

A. Furnish formwork and formwork accessories according to ACI 301 (ACI 301M).

B. Forms for Cylindrical Columns, Pedestals, and Supports: Metal, glass-fiber-reinforced plastic, paper, or fiber tubes that produce surfaces not exceeding specified formwork surface class.
   1. Provide forms with sufficient wall thickness to resist plastic concrete loads without detrimental deformation.

C. Concrete Reinforcement:
   1. Reinforcing Bars: ASTM A 615/A 615M, deformed.

D. Portland Cement: ASTM C 150, Type V.

E. Normal-Weight Aggregate: ASTM C 33, graded, 1-inch nominal maximum aggregate size.

F. Water: ASTM C 94/C 94M.

MasterSpec Copyright © 2025 by the American Institute of Architects, portions Copyright © 2025 by HMC Architects for LODI USD Henderson School Lunch Shelter. Warning: This AIA MasterSpec based document is protected by U.S. Copyright Law and International Treaties.

2.08 CONCRETE MIXTURES

A. Normal-Weight Concrete: Prepare design mixes, proportioned according to ACI 301 (ACI 301M), as follows:
   1. Minimum Compressive Strength: 5000 psi at 28 days.

B. Ready-Mixed Concrete: Measure, batch, mix, and deliver concrete according to ASTM C 94/C 94M, and furnish batch ticket information.

2.09 ACCESSORIES

A. General: Provide accessories as standard fabricated engineered structure system manufacturer and as specified. Fabricate and finish accessories at the factory to greatest extent possible, by manufacturer's standard procedures and processes. Comply with indicated profiles and with dimensional and structural requirements.

2.10 FABRICATION

A. General: Design components and field connections required for erection to permit easy assembly.
   1. Mark each piece and part of the assembly to correspond with previously prepared erection drawings, diagrams, and instruction manuals.
   2. Fabricate structural framing to produce clean, smooth cuts and bends. Punch holes of proper size, shape, and location. Members shall be free of cracks, tears, and ruptures.

B. Primary Framing: Shop fabricate framing components to indicated size and section, with baseplates, bearing plates, stiffeners, and other items required for erection welded into place. Cut, form, punch, drill, and weld framing for bolted field assembly.

C. Secondary Framing: Shop fabricate framing components to indicated size and section by roll forming or break forming, with baseplates, bearing plates, stiffeners, and other plates required for erection welded into place. Cut, form, punch, drill, and weld secondary framing for bolted field connections to primary framing.

2.11 SHEET METAL FABRICATION

A. General: Custom fabricate flashing and sheet metal to comply with recommendations in SMACNA's "Architectural Sheet Metal Manual" that apply to design, dimensions, geometry, metal thickness, and other characteristics of item indicated. Fabricate items at the shop to greatest extent possible.
   1. Obtain field measurements for accurate fit before shop fabrication.
   2. Form flashing and sheet metal without excessive oil canning, buckling, and tool marks and true to line and levels indicated, with exposed edges folded back to form hems.

MasterSpec Copyright © 2025 by the American Institute of Architects, portions Copyright © 2025 by HMC Architects for LODI USD Henderson School Lunch Shelter. Warning: This AIA MasterSpec based document is protected by U.S. Copyright Law and International Treaties.

3. Conceal fasteners and expansion provisions where possible. Exposed fasteners are not allowed on faces exposed to view.

B. Sealed Joints: Form nonexpansion but movable joints in metal to accommodate elastomeric sealant.

C. Expansion Provisions: Where lapped expansion provisions cannot be used, form expansion joints of intermeshing hooked flanges, not less than 1 inch deep, filled with butyl sealant concealed within joints.

D. Fabricate cleats and attachment devices from same material as accessory being anchored or from compatible, noncorrosive metal.

E. Hanging Gutters: Fabricate to cross section indicated, complete with end pieces, outlet tubes, and other accessories as required. Fabricate in minimum 96-inch- long sections. Furnish flat-stock gutter spacers and gutter brackets fabricated from same metal as gutters, of size recommended by SMACNA but not less than twice the gutter thickness. Fabricate expansion joints, expansion-joint covers, and gutter accessories from same metal as gutters.
   1. Expansion Joints: Butt type with cover plate.
   2. Gutters: Fabricate from one of the following materials:
      a. Galvanized Steel: 0.022 inch thick.
      b. Aluminum-Zinc Alloy-Coated Steel: 0.022 inch thick.

2.12 PIPE DOWNSPOUTS

A. Downspouts: Fabricate round downspouts complete with mitered elbows. Furnish with metal hangers, from same material as downspouts, and anchors. Hot dip galvanize after fabrication.
   1. Fabricate from the following material:
      a. Schedule 40 steel pipe.
   2. Finish: Manufacturer’s standard powder coat finish.

2.13 SOURCE QUALITY CONTROL

A. Special Inspection: Owner will engage a qualified special inspector to perform source quality control inspections and to submit reports.

PART 3 - EXECUTION

3.01 EXAMINATION

A. Examine substrates, areas, and conditions, with erector present, for compliance with requirements for installation tolerances and other conditions affecting performance of the Work.

MasterSpec Copyright © 2025 by the American Institute of Architects, portions Copyright © 2025 by HMC Architects for LODI USD Henderson School Lunch Shelter. Warning: This AIA MasterSpec based document is protected by U.S. Copyright Law and International Treaties.

B. Before erection proceeds, survey elevations and locations of concrete- and masonry-bearing surfaces and locations of anchor rods, bearing plates, and other embedments to receive structural framing, with erector present, for compliance with requirements and manufacturer's tolerances.

C. Proceed with erection only after unsatisfactory conditions have been corrected.

3.02 PREPARATION

A. Provide temporary shores, guys, braces, and other supports during erection to keep structural framing secure, plumb, and in alignment against temporary construction loads and loads equal in intensity to design loads. Remove temporary supports when permanent structural framing, connections, and bracing are in place unless otherwise indicated.

3.03 CONCRETE

A. Design, construct, erect, brace, and maintain formwork according to ACI 301 (ACI 301M).

B. Place and secure anchorage devices and other embedded items required for adjoining work attached to or supported by cast-in-place concrete. Use setting drawings, templates, diagrams, instructions, and directions furnished with items to be embedded.

C. Comply with CRSI's "Manual of Standard Practice" for fabricating, placing, and supporting reinforcement.

D. Comply with ACI 301 (ACI 301M) for placing concrete.

E. Consolidate concrete with mechanical vibrating equipment.

F. Finish: Provide smooth, as-cast concrete finish imparted by form-facing material, arranged in an orderly and symmetrical manner with a minimum of seams. Repair and patch holes and defective areas. Remove fins and other projections exceeding 1/8 inch (3 mm).

3.04 ERECTION OF STRUCTURAL FRAMING

A. Erect fabricated engineered structures according to manufacturer's written instructions and drawings.

B. Do not field cut, drill, or alter structural members without written approval from system manufacturer's professional engineer.

MasterSpec Copyright © 2025 by the American Institute of Architects, portions Copyright © 2025 by HMC Architects for LODI USD Henderson School Lunch Shelter. Warning: This AIA MasterSpec based document is protected by U.S. Copyright Law and International Treaties.

C. Set structural framing accurately in locations and to elevations indicated, according to AISC specifications referenced in this Section. Maintain structural stability of frame during erection.

D. Align and adjust structural framing before permanently fastening. Before assembly, clean bearing surfaces and other surfaces that will be in permanent contact with framing. Perform necessary adjustments to compensate for discrepancies in elevations and alignment.
   1. Level and plumb individual members of structure.

E. Secondary Framing: Erect framing level, plumb, rigid, secure, and true to line.

F. Bracing: Install bracing where indicated on erection drawings.

G. Erection Tolerances: Maintain erection tolerances of structural framing within AISC 303.

3.05 METAL ROOF PANEL INSTALLATION

A. Standing Seam Metal Panels: Fasten metal panels to supports with fasteners at each lapped joint at location and spacing recommended by manufacturer.
   1. Lap ribbed or fluted sheets one full rib. Apply panels and associated items true to line for neat and weathertight enclosure.
   2. Provide metal-backed washers under heads of exposed fasteners bearing on weather side of metal panels.
   3. Locate and space exposed fasteners in uniform vertical and horizontal alignment. Use proper tools to obtain controlled uniform compression for positive seal without rupture of washer.
   4. Install screw fasteners with power tools having controlled torque adjusted to compress washer tightly without damage to washer, screw threads, or panels. Install screws in predrilled holes.
   5. Flash and seal panels with weather closures at perimeter of all openings.

3.06 SHEET METAL FLASHING INSTALLATION

A. General: Anchor flashing and sheet metal and other components of the Work securely in place, with provisions for thermal and structural movement so that completed flashing and sheet metal shall not rattle, leak, or loosen, and shall remain watertight. Use fasteners, solder, welding rods, protective coatings, separators, sealants, and other miscellaneous items as required to complete flashing and sheet metal system.
   1. Install flashing and sheet metal true to line and levels indicated. Provide uniform, neat seams with minimum exposure of solder, welds, and sealant.
   2. Install flashing and sheet metal to fit substrates and to result in watertight performance. Verify shapes and dimensions of surfaces to be covered before fabricating sheet metal.

MasterSpec Copyright © 2025 by the American Institute of Architects, portions Copyright © 2025 by HMC Architects for LODI USD Henderson School Lunch Shelter. Warning: This AIA MasterSpec based document is protected by U.S. Copyright Law and International Treaties.

3. Install exposed flashing and sheet metal without excessive oil canning, buckling, and tool marks.
4. Torch cutting of flashing and sheet metal is not permitted.

B. Hanging Gutters: Join sections with riveted and soldered joints or with lapped joints sealed with sealant. Provide for thermal expansion. Attach gutters at eave or fascia to firmly anchored gutter brackets spaced not more than 36 inches apart. Provide end closures and seal watertight with sealant. Slope to downspouts.
1. Install gutter with expansion joints at locations indicated, but not exceeding, 50 feet apart. Install expansion-joint caps.

C. Downspouts: Anchor pipe downspouts securely in place, with provisions for thermal and structural movement. Use fasteners, anchors, protective coatings, sealants, and other miscellaneous items as required to complete installation.
1. Install pipe downspouts level, plumb, true to line and elevation and without jogs in alignment.
2. Install pipe downspouts to fit substrates and to result in watertight performance.

3.07 ACCESSORY INSTALLATION

A. General: Install accessories with positive anchorage to building and provide for thermal expansion. Coordinate installation with other components.
1. Where dissimilar metals contact each other or corrosive substrates, protect against galvanic action by painting contact surfaces with corrosion-resistant coating, by applying rubberized-asphalt underlayment to each contact surface, or by other permanent separation as recommended by manufacturer.

3.08 FIELD QUALITY CONTROL

A. Special Inspections: Owner will engage a qualified special inspector to perform field quality control special inspections and to submit reports.

B. Concrete Tests: Perform according to ACI 301 (ACI 301M).

C. Installation will be considered defective if it does not pass tests and inspections.

D. Prepare test and inspection reports.

END OF SECTION

MasterSpec Copyright © 2025 by the American Institute of Architects, portions Copyright © 2025 by HMC Architects for LODI USD Henderson School Lunch Shelter. Warning: This AIA MasterSpec based document is protected by U.S. Copyright Law and International Treaties.

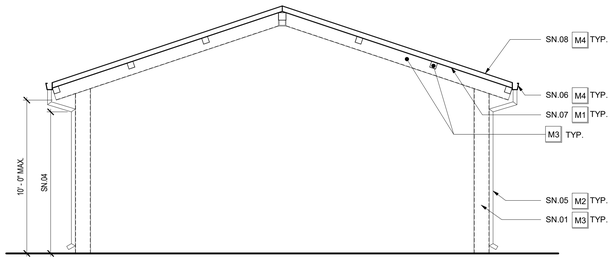

1 LUNCH SHELTER - SECTION
1/4" = 1'-0"

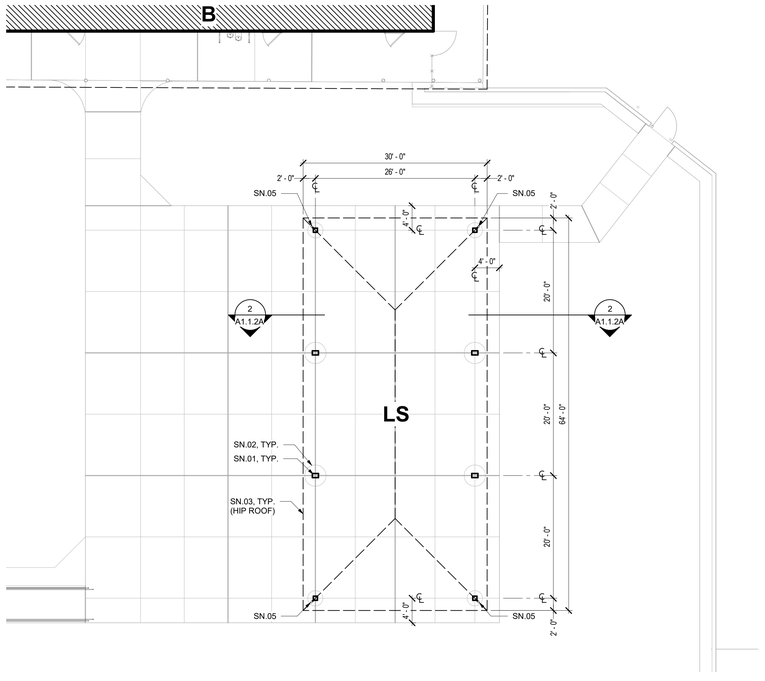

2 ENLARGED SITE PLAN - LUNCH SHELTER
1" = 10'-0"

EXTERIOR COLOR SCHEDULE

	MATERIAL	COLOR
M1	METAL	METAL FINISH COLOR 1 (1)
M2	METAL	METAL FINISH COLOR 2 (1)
M3	METAL	METAL PREFINISH COLOR 1(1)(3)
M4	METAL	METAL PREFINISH COLOR 2(1)(4)

(1) CUSTOM COLORS TO BE SUBMITTED PER SPECIFICATIONS.

(2) CLEAN, PREP AND PAINT ALL SURFACES NOT PREFINISHED.

(3) MATCH METAL PAINT "COLOR 1" WITH COLOR DESIRED IN PREFINISHED "COLOR 1"

(4) MATCH METAL PAINT "COLOR 2" WITH COLOR DESIRED IN PREFINISHED "COLOR 2"

SHEET NOTES

SN.01 HSS COLUMN
SN.02 DRILLED PIER FOOTING
SN.03 ROOF OVERHANG ABOVE
SN.04 HOLD TIGHT TO UNDERSIDE OF FRAMING; MAINTAIN 9'-0" CLEARANCE MIN.
SN.05 3" DIAMETER SCHEDULE 40 STEEL DOWNSPOUT, PAINTED
SN.06 PREFINISHED GUTTER AND FLASHING
SN.07 PAINT DECK UNDERSIDE
SN.08 PREFINISHED STANDING SEAM ROOF

rga + A studio of HMC Architects

LICENSED ARCHITECT
JEFFREY ALAN GRAU
C-14648
5/31/23
RENEWAL DATE
STATE OF CALIFORNIA

HENDERSON SCHOOL LUNCH SHELTER

LODI UNIFIED SCHOOL DISTRICT
LODI, CA

Revision

Copyright © 2021 Rainforth Grau Architects. All rights reserved. Reproduction of these plans, either in whole or in part, including any form of copying and/or preparation of derivative works thereof, for any reason without prior written permission, is strictly prohibited.

LUNCH SHELTER EXHIBIT

PROJECT NO. 22-1545
DATE: 1/21/26
SHEET
A1.1.2
AD 1.01

1545 Henderson_Site_CD_detached.rvt
1/21/2026 3:34:50 PM

DESIGN CRITERIA			
BASE LOCATION LOCATED AT BOTTOM OF BASEPLATE/TOP OF FOOTING			
DESCRIPTION	DESIGN VALUES		
DEAD AND LIVE LOADS			
ROOF LIVE LOAD	20 PSF		
ROOF DEAD LOAD (SUPERIMPOSED ON FRAME)	5 PSF MAX		
ROOF PANEL DEAD LOAD	M=1.1 PSF, G = 1.2 PSF, S = 1.3 PSF		
COLLATERAL DEAD LOAD	M = 3.9 PSF, G = 3.8 PSF, S = 3.7 PSF		
ROOF LIVE LOAD			
ROOF LIVE LOAD, L_r	20 PSF		
ROOF SNOW LOAD			
GROUND SNOW LOAD, P_g	20 PSF		
RISK CATEGORY	II		
ROOF SNOW LOAD: SLOPED, P_s	20 PSF		
FOR SNOW LOAD CONDITIONS ONLY - SITE APPLICATION REVIEWER SHALL VERIFY THE STTRUCTURE SHALL BE LOCATED AT LEAST 20 FEET			
FROM ANY ADJACENT STRUCTURE FOR SNOW DRIFT.			
SNOW LOAD SLOPE FACTOR, C_s	1.0		
SNOW LOAD EXPOSURE FACTOR, C_e	1.0		
SNOW LOAD IMPORTANCE FACTOR, I_s	1.0		
THERMAL FACTOR, C_t	1.2		
LOWEST ANTICIPATED SERVICE TEMPERATURE	30'		
WIND DESIGN			
BASIC WIND SPEED (3 SECOND GUST), V_{ult}, V_{asd}	100 MPH, 78 MPH		
RISK CATEGORY	II		
EXPOSURE CATEGORY	C		
FACTORS: K_z, K_{zt}, K_d	0.85, 1.0, 0.85		
$q_h = 0.00256\ K_z\ K_{zt}\ K_d\ V^2$	18.50 PSF		
C_{NW} PER ASCE FIGURE 27.3-5 ROOF ANGLE 18.43 - CLEAR / OBSTRUCTED	CASE A (1.1 / -1.2) CASE B (0.01 / -0.69)		
C_{NL} PER ASCE FIGURE 27.3-5 ROOF ANGLE 18.43 - CLEAR / OBSTRUCTED	CASE A (-0.17 / -1.09) CASE B (-0.96 / -1.65)		
C_N PER ASCE FIGURE 27.3-7 PARALLEL TO RIDGE - CLEAR / OBSTRUCTED (< h)	CASE A (-0.8 / -1.2) CASE B (0.8 / 0.5)		
C_N PER ASCE FIGURE 27.3-7 PARALLEL TO RIDGE - CLEAR / OBSTRUCTED (> h, < 2h)	CASE A (-0.6 / -0.9) CASE B (0.5 / 0.5)		
C_N PER ASCE FIGURE 27.3-7 PARALLEL TO RIDGE - CLEAR / OBSTRUCTED (>2h)	CASE A (-0.3 / -0.6) CASE B (0.3 / 0.3)		
COMPONENTS & CLADDING - C_N (PRESSURE/SUCTION) CLEAR / OBSTRUCTED	ZONE 3 - (2.29 / -2.11) / (1.0 / -3.0)		
	ZONE 2 - (1.77 / -1.63) / (0.8 / -2.3)		
	ZONE 1 - (1.15 / -1.05) / (0.5 / -1.5)		
SEISMIC DESIGN			
LATERAL FORCE RESISTING SYSTEM	STEEL - ORDINARY CANTILEVER COLUMN		
ANALYSIS PROCEDURE	EQUIVALENT LATERAL FORCE		
SESIMIC IMORTANCE FACTOR, I_e	1.0		
SEISMIC SITE CLASS	D		
MCE_R SPECTRAL RESPONSE ACCELERATION @ 0.2 s, S_S	2.60		
MCE_R SPECTRAL RESPONSE ACCELERATION @ 0.2 s, S_1	0.90		
SHORT PERIOD SITE COEFFICIENT, F_a	1.20		
LONG PERIOD COEFFICIENT, F_v	1.70		
FUNDAMENTAL PERIOD OF THE STRUCTURE, T (WORST CASE FOR ALL STRUCTURES)	0.152 s		
DESIGN SPECTRAL RESPONSE ACCELERATION AT SHORT PERIOD, S_{DS}	2.08 ☐		
DESIGN SPECTRAL RESPONSE ACCELERATION AT SHORT PERIOD, S_{DS} - USED TO DETERMINE Cs (WITH CAP PER ASCE 7 12.8.1.3) SOIL PROPERTIES MAY NOT BE CLASSIFIED AS SITE CLASS E.	2.08 * 0.70 = 1.456 ☐		
DESIGN SPECTRAL RESPONSE ACCELERATION AT 1-s PERIODS, S_{D1}	1.02		
SEISMIC DESIGN CATEGORY	E		
SITE SPECIFIC RESPONSE ANALYSIS NOT REQUIRED PER ASCE 7 11.4.8 EXCEPTION 2	T_s = 0.49 s	T < 1.5 * T_s	
RESPONSE MODIFICATION FACTOR, R	1.25		
OVERSTRENGTH FACTOR, Ω	1.25		
REDUNDANCY FACTOR, ρ	1.3		
HORIZONTAL OR VERTICAL IRREGULARITIES	NONE		
SEISMIC RESPONSE COEFFICIENT, C_s (20' WIDE, 30' WIDE, 40' WIDE)	~~1.16~~	1.00	~~1.00~~
DESIGN BASE SHEAR, V (20' WIDE, 30' WIDE, 40' WIDE)	12.73 PSF [ ]	13.41 PSF [x]	14.65 PSF [ ]
ALLOWABLE SOIL BEARING FOR FOUNDATIONS	VARIES - SEE FOUNDATION CHARTS		
FLOOD DESIGN - DESIGN IS ASSUMED TO NOT BE IN FLOOD HAZARD AREA			
IF PROJECT IS LOCATED IN A FLOOD ZONE OTHERTHAN ZONE X, A LETTER STAMPED & SIGNED FROM A SOILS ENGINEER IS REQUIRED TO VALIDATE THE ALLOWABLE SOIL VALUES SPECIFIED.			

STRUCTURAL SEPARATION

ALL DEFLECTIONS SHOWN ALSO INCLUDE THE P-DELTA ROTATION PER IR PC-7

DEFLECTIONS ARE FOR (1) STRUCTURE

SOIL CLASSES PER CBC TABLE 1806A.2

MAXIMUM DRIFT δ_{max} SIDE COLUMNS		Soil Class 5	Soil Class 4	Soil Class 3
20' WIDE (8' EAVE HT, 10' EAVE HEIGHT, 12' EAVE HT)	(INCHES)	[ ] 2.40	[ ] 2.55	[ ] 2.65
30' WIDE (8' EAVE HEIGHT, 12' EAVE HT)	(INCHES)	[x] 2.15	[ ] 2.30	[ ] 2.40
40' WIDE (8' EAVE + T, 10' EAVE HEIGHT, 12' EAVE HT)	(INCHES)	[ ] 2.20	[ ] 2.20	[ ] 2.30
MINIMUM SEPARATION ($\delta_m = C_d\ \delta_{max}$) C_d = 1.25				
20' WIDE (8' EAVE HT, 10' EAVE HEIGHT, 12' EAVE HT)	(INCHES)	[ ] 3.00	[ ] 3.19	[ ] 3.31
30' WIDE (8' EAVE HT, 10' EAVE HEIGHT, 12' EAVE HT)	(INCHES)	[x] 2.69	[ ] 2.88	[ ] 3.00
40' WIDE (8' EAVE HT, 10' EAVE HEIGHT, 12' EAVE HT)	(INCHES)	[ ] 2.75	[ ] 2.75	[ ] 2.88

MAXIMUM DRIFT δ_{max} END COLUMNS		Soil Class 5	Soil Class 4	Soil Class 3
20' WIDE (8' EAVE HT, 10' EAVE HEIGHT, 12' EAVE HT)	(INCHES)	[ ] 2.40	[ ] 2.55	[ ] 2.65
30' WIDE (8' EAVE HT, 10' EAVE HEIGHT, 12' EAVE HT)	(INCHES)	[x] 2.15	[ ] 2.30	[ ] 2.40
40' WIDE (8' EAVE HT, 10' EAVE HEIGHT, 12' EAVE HT)	(INCHES)	[ ] 2.20	[ ] 2.20	[ ] 2.30
MINIMUM SEPARATION ($\delta_m = C_d\ \delta_{max}$) C_d = 1.25				
20' WIDE (8' EAVE HT, 10' EAVE HEIGHT, 12' EAVE HT)	(INCHES)	[ ] 3.00	[ ] 3.19	[ ] 3.31
30' WIDE (8' EAVE HT, 10' EAVE HEIGHT, 12' EAVE HT)	(INCHES)	[x] 2.69	[ ] 2.88	[ ] 3.00
40' WIDE (8' EAVE HT, 10' EAVE HEIGHT, 12' EAVE HT)	(INCHES)	[ ] 2.75	[ ] 2.75	[ ] 2.88

INSTRUCTIONS FOR ARCHITECTS SUBMITTING THESE PRE-CHECKED DRAWINGS TO DSA:

BEFORE SUBMITTING THESE PRE-CHECKED DRAWINGS FOR YOUR PROJECT, FOLLOW THE STEPS BELOW TO PROPERLY DEFINE THE APPROVED OPTIONS:

STEP 1: SELECT FRAME DIMENSIONS FOR YOUR PROJECT
- HIP STRUCTURES UP TO 20' WIDE USE THE "RH 20" BASE FRAME
- HIP STRUCTURES UP TO 30' WIDE USE THE "RH 30" BASE FRAME
- HIP STRUCTURES UP TO 40' WIDE USE THE "RH 40" BASE FRAME
- MAXIMUM WIDTH IS 40' (SEE "ARCHITECTURAL VIEWS" SHEET FOR REFERENCE)
- THE 24', 44', 64', 84' AND 104' LENGTHS ARE SUGGESTED BECAUSE THEY ARE THE MOST COMMON (20' BAYS ARE THE MOST ECONOMICAL)
- FRAME LENGTHS ASSUME 2' OVERHANGS (UNO BY ARCHITECT = 2' MAX DIMENSION)

STEP 1	FRAME DIMENSIONS				
		SUGGESTED			OTHER
	FRAME WIDTH	[ ] 20'	[X] 30'	[ ] 40'	[ ] (40' MAX)
	FRAME LENGTH	[ ] 44'	[X] 64'	[ ] 84'	[ ] 104' [ ] (NO MAX)

STEP 2: SELECT ROOF DECK FOR YOUR PROJECT
- "M" REPRESENTS McELROY METAL "MULTI-RIB" ROOF PANEL
- "G" REPRESENTS McELROY METAL "MEGA-RIB" ROOF PANEL
- "S" REPRESENTS McELROY METAL "MEDALLION-LOK" 16" STANDING SEAM ROOF PANEL

STEP 2	ROOF PANEL			
	ROOF PANEL TYPE	[ ] M	[ ] G	[X] S

STEP 3: IDENTIFY THE Ss ACCELERATION (g) FOR YOUR PROJECT
- Ss VALUE DETERMINES THE REQUIRED SEISMIC DESIGN FORCES
- Ss VAULE DEPENDS ON THE PROJECTS GEOGRAPHICAL LOCATION (VALUES RANGE FROM 0.00 TO 3.73)
  - FIND Ss VALUES FOR YOUR PROJECT ON THE USGS WEBSITE (SEARCH INTERNET FOR "USGS SEISMIC DESIGN MAPS")

STEP 3	PROJECT SITE - Ss ACCELERATION (g)
	0.760

STEP 4: IDENTIFY THE Ss REGION FOR YOUR PROJECT
- THE REGIONS ARE DEPENDANT ON THE Ss VALUE DETERMINED IN STEP 3
- THE Ss REGION DICTATES THE MAXIMUM DEAD LOAD PERMITTED ON THE FRAME

STEP 4	Ss REGION			
			Ss REGIONS	MAX DEAD LOAD
	DESCRIPTION	X	0 < Ss <= 2.14	5 PSF
			2.14 < Ss <= 2.50	5 PSF
			2.50 < Ss <= 2.60	5 PSF

STEP 5: IDENTIFY THE ROOF DEAD LOAD FOR YOUR PROJECT
- THE ROOF DECK DEAD LOAD WILL ALWAYS BE INCLUDED
- THE COLLATERAL LOAD REPRESENTS ADDITIONAL LOAD THAT CAN BE SUPPORTED BY THE FRAME
- BE SURE THE TOTAL ROOF DEAD LOAD FOR YOUR PROJECT IS LESS THAN OR EQUAL TO THE MAX DEAD LOAD SHOWN IN STEP 4 FOR YOUR Ss VALUE
- Sds VALUE USED IN CALCULATION IS THE CAPPED Sds (SEE DESIGN CRITERIA)

STEP 5	TOTAL ROOF DEAD LOAD		
		DEAD LOAD	EXAMPLES
	ROOF DECK	1.3 PSF	M=1.1PSF; G=1.2PSF ;S=1.3PSF (SEE STEP 2)
	COLLATERAL	_____ PSF	LIGHTNING,FIRE SUPPRESSION,SOLAR PANELS,ETC
	TOTAL	1.3 PSF	ADD ROOF DECK AND COLLATERAL LOADS (MAX 5 PSF)

STEP 6: IDENTIFY THE FOUNDATION REQUIREMENTS FOR YOUR PROJECT
- IDENTIFY SOIL CLASS FOR PROJECT SITE PER SITE SPECIFIC SOIL CONDITIONS
- USE THIS TO SELECT CORRECT FOUNDATION SIZE ON FOUNDATION SHEET

STEP 6	FOUNDATION REQUIREMENTS		
	[x] GEOTECHNICAL REPORT NOT REQUIRED	[ ] GEOTECHNICAL REPORT REQUIRED	
	SOIL CLASS 5 (BEARING) 1500 PSF [x]	SOIL CLASS 4 (BEARING) 2000 PSF [ ]	SOIL CLASS 3 (BEARING) 3000 PSF [ ]
	SOIL CLASS 5 (LATERAL BEARING) 200 PSF/FT	SOIL CLASS 5 (LATERAL BEARING) 300 PSF/FT	SOIL CLASS 5 (LATERAL BEARING) 400 PSF/FT
	COHESION 130 PSF	FRICTION COEFFICIENT 0.25	FRICTION COEFFICIENT 0.30

- SELECT AND VERIFY MINIMUM SEPARATION DISTANCE BETWEEN STRUCTURES

STEP 7: SELECT MISCELLANEOUS OPTIONS FOR YOUR PROJECT
- MAXIMUM CLEAR HEIGHT IS 12'-0"; (SEE "ARCHITECTURAL VIEWS" SHEET FOR REFERENCE)
- MARK UP PC DRAWINGS WITH SIZE AND LOCATION OF CUTOUTS BEFORE SUBMITTING TO DSA

STEP 7	MISCELLANEOUS		
		DESIGN OPTIONS	
	CLEAR HEIGHT	[ ] 8' [X] 10' [ ] 12' MAX	
	ELECTRICAL CUTOUTS	[ ] YES	[X] NO
	GUTTERS	[X] YES	[ ] NO

STEP 8: SELECT APPLICABLE SHEET INDEX FOR YOUR PROJECT
- REFERENCE THE BASE FRAME (STEP 1) AND THE ROOF PANEL TYPE (STEP 2)
- IDENTIFY THE APPLICABLE SHEET INDEX

STEP 8	SHEET INDEX											
	BASE FRAME	RH 20			RH 30			RH 40				
	ROOF PANEL TYPE	M	G	S	M	G	S	M	G	S		
	SELECT ONE	[ ]	[ ]	[ ]	[ ]	[ ]	[X]	[ ]	[ ]	[ ]		
	GENERAL NOTES	LS1.0 LS1.1	LS1.0 LS1.1	LS1.0 LS1.1	LS1.0 LS1.1	LS1.0 LS1.1	LS1.0 LS1.1	LS1.0	LS1.0	LS1.0		
	FOUNDATION PLAN	LS2.0	LS2.0	LS2.0	LS3.0	LS3.0	LS3.0	LS4.0	LS4.0	LS4.0		
	FRAMING PLAN	LS2.1	LS2.1	LS2.1	LS3.1	LS3.1	LS3.1	LS4.1	LS4.1	LS4.1		
	FRAME CONNECTION DETAILS	LS2.1	LS2.1	LS2.1	LS3.1	LS3.1	LS3.1	LS4.2	LS4.2	LS4.2		
	ROOFING LAYOUT & DETAILS	LS2.2	LS2.2	LS2.4	LS3.2	LS3.3	LS3.4	LS4.3	LS4.3	LS4.5		
	DSA 103 EXAMPLE	LS1.2 LS1.3	LS1.2 LS1.3	LS1.2 LS1.3	LS1.2 LS1.3	LS1.2 LS1.3	LS1.2 LS1.3	LS1.2 LS1.3	LS1.2 LS1.3	LS1.2 LS1.3		
	MISC DESIGN OPTIONS	LS5.0	LS5.0	LS5.0	LS5.0	LS5.0	LS5.0	LS5.0	LS5.0	LS5.0		
	-											
	-											

STEP 9: INCLUDE APPLICABLE SHEETS WITH YOUR DSA SUBMITTAL
- INCLUDE 'MISC DESIGN OPTIONS' SHEET FOR PROJECTS WITHOUT ELECTRICAL CUTOUTS OR GUTTERS

STEP 10: IDENTIFY PROJECT NAME AND LOCATION

PROJECT NAME:	SCHOOL DISTRICT:
Henderson School Lunch Shelter	Lodi Unified School District

STEP 11: CROSS OUT EXAMPLE 103 FORMS & INCORPORATE REQUIRED SPECIAL INSPECTIONS 103 FORMS THAT ARE PROJECT SPECIFIC

SITE SPECIFIC PARAMETERS

INSTRUCTIONS: DESIGN PROFESSIONAL SHALL CHECK THE APPROPRIATE SELECTION BOXES BELOW AND ENTER THE DESIGN PARAMETERS APPLICABLE TO THE SPECIFIC PROJECT SITE

SNOW
pg = _____psf
Pf = _____psf
Ce = _____psf

WIND
V = 104 mph < XX mph
kzt = 1 <1
EXPOSURE: C[X] D[ ]

SELECT ONE

SIESMIC
[X] DESIGN BASED ON SITE CLASS D
NO GEOTECHNICAL INVESTIGATION REQUIRED
Ss = 0.760 Fa = 1.2

☐ DESIGN BASED ON SITE CLASS DETERMINED PER CHAPTER 20 OF ASCE 7-16
GEOTECHNICAL INVESTIGATION PROVIDED
SITE CLASS: C ☐ D☐ E☐
Ss = _____ Fa = _____PER ASCE 7-16 SUPPL 3, TABLE 11.4-1

☐ DESIGN BASED ON SITE SPECIFIC GROUND MOTION HAZARD ANALYSIS PER CHAPTER 21 OF ASCE 7-16
SHORT-PERIOD DESIGN SPECTRAL RESPONSE PARAMETER, Sds, SHALL BE AS SPECIFIED IN GEOTECHNICAL INVESTIGATION
CGS APPROVAL REQUIRED
NOT ELEGIBLE FOR OTC REVIEW
SITE CLASS: C☐ D☐ E☐

Sds = Fa Ss = 0.760

[X] SITE CLASS:C or D: 0.7 x Sds* = 0.7 x 0.760 = 0.532 < X.XX
☐ SITE CLASS E: Sds = _____ < X.XX
Cs= X.XXX USED IN DESIGN
SIESMIC DESIGN CATEGORY D ☐ E ☐

*SITE SPECIFIC Sds VALUE BEFORE APPLYING REDUCTION ALLOWED BY ASCE 7 SECTION 12.8.1.3

ABBREVIATIONS:

ACI	AMERICAN CONCRETE INSTITUTE	MPH	MILES PER HOUR
AISC	AMERICAN INSTITUTE OF STEEL CONSTRUCTION	M	MULTI-RIB ROOF PANEL (MCELROY)
ASM	ASSEMBLY (INTERNAL REFERENCE)	NTS	NOT TO SCALE
ASTM	AMERICAN SOCIETY FOR TESTING AND MAT'LS	NO	NUMBER
AWS	AMERICAN WELDING SOCIETY	OC	ON CENTER
CBC	CALIFORNIA BUILDING CODE	OSHA	OCCUPATIONAL HEALTH AND SAFETY ADMIN
CJP	COMPLETE JOINT PENETRATION	PCF	POUNDS PER CUBIC FOOT
CLR	CLEAR	PJ	PRETENSIONED JOINT
DEG	DEGREE	PLCS	PLACES
DIA	DIAMETER	PLT	PLATE
DIM	DIMENSION	PSF	POUNDS PER SQUARE FOOT
DSA	DIVISION OF THE STATE ARCHITECT	PSI	POUNDS PER SQUARE INCH
EQ	EQUAL	QTY	QUANTITY
FT	FEET	REF	REFERENCE
GA	GAGE	SQ	SQUARE
IN	INCHES	SS	STANDING SEAM ROOF PANEL (MCELROY)
KSI	KIPS PER SQUARE INCH	TYP	TYPICAL
MAX	MAXIMUM	UNO	UNLESS NOTED OTHERWISE
MIN	MINIMUM	USGS	U.S. GEOLOGICAL SURVEY
MISC	MISCELLANEOUS	W/	WITH

ARCHITECTURAL REQUIREMENTS	
DESCRIPTION	DESIGN VAULES
TYPE OF CONSTRUCTION	II-B
OCCUPANCY CLASSIFICATION	~~X~~ A-2
NUMBER OF STORIES	1
FIRE SPRINKLER SYSTEM	NOT BY ICON/WEIGHT NOT INCLUDED IN DESIGN
MOST COMMON RH20 MIN/MAX SQ.FT (SEE STEP 1)	480/2,080
MOST COMMON RH30 MIN/MAX SQ.FT (SEE STEP 1)	720/3,120
MOST COMMON RH40 MIN/MAX SQ.FT (SEE STEP 1)	960/4,160

AREA OVER 4000 SQ.FT REQUIRES GEOHAZARD REPORT
ALLOWABLE ARE FOR II-B / A-3 IS 9500 SQ.FT

RELATED BUILDING CODES AND STANDARDS

TITLE 24 CODES:

2022 CALIFORNIA ADMINISTRATIVE CODE (CAC).....(PART 1, TITLE 24, CCR)
2022 CALIFORNIA BUILDING CODE (CBC),PART 2, TITLE 24 CCR
2022 CALIFORNIA ELECTRICAL CODE.....(PART 3, TITLE 24, CCR)
2022 CALIFORNIA MECHANICAL CODE (CMC).....(PART 4, TITLE 24, CCR)
2022 CALIFORNIA PLUMBING CODE (CPC).....(PART 5, TITLE 24, CCR)
2022 CALIFORNIA ENERGY CODE.....(PART 6, TITLE 24, CCR)
2022 CALIFORNIA FIRE CODE (CFC) .....(PART 9, TITLE 24, CCR)
2022 CALIFORNIA GREEN BUILDING STANDARDS CODE.....(PART 11, TITLE 24, CCR)
2022 CALIFORNIA REFERENCE STANDARDS CODE.....(PART 12, TITLE 24, CCR)
TITLE 19 CCR, PUBLIC SAFETY, STATE FIRE MARSHAL REGULATIONS

REFERENCE CODE SECTIONS FOR APPLICABLE STANDARDS:
2022 CBC, CHAPTER 35
2022 CFC, CHAPTER 80

SCOPE OF WORK NARRATIVE

THESE DRAWINGS ILLUSTRATE THE FABRICATION AND INSTALLATION REQUIREMENTS FOR A FREE-STANDING PREFABRICATED STEEL SHADE STRUCTURE. THE ENTIRE STRUCTURAL SYSTEM IS COMPRISED OF HOLLOW STRUCTURAL STEEL MEMBERS SUPPORTED BY CONCRETE FOUNDATIONS. THE FLEXIBILITY INCLUDED HEREIN ALLOWS THE STRUCTURE TO COMPLY WITH A WIDE VARIETY OF PROJECT SITES AND LOADING REQUIREMENTS.

PRE-CHECK (PC) DOCUMENT
Code: 2022 CBC
A separate project application for construction is required.

ICON STD	RH/DSA-PC
DRAWN BY	JD
DATE	7/25/2023
REV	
REV DATE	

JRMA
ARCHITECTS ENGINEERS
2700 SATURN STREET, CA 92821
T. 714.524.1870 F. 714.524.1875
WWW.JRMA.COM

REGISTERED PROFESSIONAL ENGINEER
STATE OF CALIFORNIA
Oct 04, 2023

APPROVED
DIV. OF THE STATE ARCHITECT
APP: 04-122375 PC
REVIEWED FOR
SS ☑ FLS ☑ ACS ☑ CG ☐
DATE 10/10/2023

GENERAL INFO

ICON Shelter Systems Inc
DISTINCTIVE STEEL SHELTERS
WWW.ICONSHELTERS.COM

COPYRIGHT 2004, ICON SHELTER SYSTEMS, INC.

1455 LINCOLN AVE
HOLLAND MI, 49423

616.396.0919
800.748.0985
616.396.0944 FX

LS1.0
AD 1.02

PRINTED ON :

GENERAL:

1. GENERAL NOTES AND TYPICAL DETAILS SHALL APPLY TO ALL PARTS OF THE JOB EXCEPT WHERE THEY MAY CONFLICT WITH DETAILS AND NOTES ON OTHER SHEETS. WHERE CONDITIONS ARE NOT SPECIFICALLY INDICATED BUT ARE OF SIMILAR CHARACTER TO DETAILS SHOWN, SIMILAR DETAILS OF CONSTRUCTION SHALL BE USED SUBJECT TO REVIEW BY THE STRUCTURAL ENGINEER FOR THIS PROJECT.
2. WORK SHALL CONFORM TO THE REQUIREMENTS, AS AMENDED TO DATE, OF THE LATEST ADOPTED EDITION OF THE CBC, C.A.C. TITLE 24, AND ALL STATE AND FEDERAL REGULATIONS.
3. OMISSIONS OR CONFLICTS BETWEEN THE VARIOUS ELEMENTS OF THE WORKING DRAWINGS AND/OR SPECIFICATIONS SHALL BE BROUGHT TO THE ATTENTION OF THE STRUCTURAL ENGINEER FOR THIS PROJECT PRIOR TO PROCEEDING WITH ANY WORK INVOLVED.
4. THE CONTRACTOR SHALL BE RESPONSIBLE FOR COORDINATING THE WORK OF ALL TRADES AND SHALL CHECK ALL DIMENSIONS, ALL DISCREPANCIES SHALL BE CALLED TO THE ATTENTION OF THE STRUCTURAL ENGINEER FOR THIS PROJECT AND BE RESOLVED BEFORE PROCEEDING WITH THE WORK.
5. THESE CONSTRUCTION DRAWINGS AND SPECIFICATIONS REPRESENT THE FINISHED STRUCTURE AND DO NOT INDICATE THE METHOD OF CONSTRUCTION. THE CONTRACTOR SHALL SUPERVISE AND DIRECT THE WORK AND SHALL BE SOLELY RESPONSIBLE FOR CONSTRUCTION MEANS, METHODS, TECHNIQUES, SEQUENCES AND PROCEDURES, INCLUDING, BUT NOT LIMITED TO, BRACING, TEMPORARY SUPPORTS, AND SHORING. OBSERVATION VISIT TO THE SITE BY FIELD REPRESENTATIVES OF THE ARCHITECT/ENGINEER SHALL NOT INCLUDE INSPECTIONS OF THE PROTECTIVE MEASURES OR THE CONSTRUCTION PROCEDURES. ANY SUPPORT SERVICES PERFORMED BY THE ARCHITECT/ENGINEER DURING THE CONSTRUCTION SHALL BE DISTINGUISHED FROM CONSTRUCTION AND DETAILED INSPECTION SERVICES WHICH ARE FURNISHED BY OTHERS. THESE SUPPORT SERVICES PERFORMED BY THE ARCHITECT/ENGINEER, WHETHER OF MATERIAL OR WORK, ARE FOR THE PURPOSE OF ASSISTING IN QUALITY CONTROL AND IN ACHIEVING CONFORMANCE WITH CONTRACT DOCUMENTS, BUT DO NOT GUARANTEE CONSTRUCTION.
6. ASTM DESIGNATIONS AND ALL STANDARDS REFER TO THE LATEST AMENDMENTS, EXCEPT AS AMENDED BY CBC CHAPTER 35.
7. CONFORM TO APPLICABLE CAL/OSHA CONSTRUCTION SAFETY REGULATIONS FOR ALL WORK PERFORMED DURING CONSTRUCTION. JOB SITE SAFETY IS STRICTLY THE RESPONSIBILITY OF THE CONTRACTOR AND NOT THE ARCHITECT/ENGINEER OR OWNER.
8. THE ENGINEER AND THEIR CONSULTANTS SHALL HAVE NO RESPONSIBILITY FOR THE DISCOVERY, HANDLING, REMOVAL OR DISPOSAL OF HAZARDOUS MATERIALS AT THE PROJECT SITE, INCLUDING BUT NOT LIMITED TO ASBESTOS, ASBESTOS PRODUCTS, POLYCHLORINATED BIPHENYL (PCB) OR OTHER TOXIC SUBSTANCES.
9. SHOULD ANY CONDITIONS DEVELOP NOT COVERED BY THE CONTRACT DOCUMENTS, OR IF A CHANGE IN THE SCOPE OF WORK IS PROPOSED, A CONSTRUCTION CHANGE DOCUMENT DETAILING AND SPECIFYING THE REQUIRED CHANGE(S) SHALL BE SUBMITTED TO AND APPROVED BY DSA BEFORE PROCEEDING WITH THE WORK.
10. THE SCHOOL DISTRICT INSPECTOR ON RECORD SHALL INSPECT AND APPROVE THE ERECTED FRAME PRIOR TO ROOF INSTALLATION.
11. SEE REQUIREMENTS FOR LOCATION IN ANY FIRE HAZARD SEVERITY ZONE FOR WILDLAND URBAN INTERFACE AREAS (WUI) AS SPECIFIED IN THE APPLICABLE VERSION OF THE CALIFORNIA BUILDING CODE. PROVIDE PROTECTION AND DETAILS OF ALL AREAS COMPLYING WITH THE WUI REQUIREMENTS.
12. LOCATING THIS STRUCTURE CLOSER THAN 20 FEET TO OTHER STRUCTURES MAY AFFECT THE ALLOWABLE AREA FOR THE EXISTING CONSTRUCTION PER THE APPLICABLE VERSION OF THE CALIFORNIA BUILDING CODE.
13. VIEWS AND DETAILS ARE NOT DRAWN TO SCALE (UNLESS NOTED OTHERWISE). DO NOT SCALE THESE DRAWINGS.

STRUCTURAL AND MISCELLANEOUS STEEL:

1. ALL STRUCTURAL STEEL SHALL BE DETAILED, FABRICATED AND ERECTED IN ACCORDANCE WITH THE AMERICAN INSTITUE OF STEEL CONSTRUCTION (AISC) SPECIFICATION MANUAL REFERENCED BY THE LATEST EDITION OF THE CALIFORNIA BUILDING CODE.
2. PIPE SECTIONS SHALL CONFORM TO ASTM A53, Fy = 35 KSI, GRADE B OR A501 UNLESS NOTED OTHERWISE.
3. STRUCTURAL TUBING (HSS SHAPES) SHALL CONFORM TO ASTM A-500, GRADE B (OR C), Fy = 46 KSI. MIN.
4. IF MATERIAL AVAILABILITY IS LIMITED, MEMBER THICKNESS CAN BE INCREASED BEYOND WHAT IS SHOWN IN THESE DRAWINGS (MAXIMUM INCREASE OF 1/8").
5. ALL CHANNELS, ANGLES, AND MISC. STEEL SHALL CONFORM TO ASTM A-36, Fy = 36 KSI.
6. ALL PLATE STEEL SHALL CONFORM TO ASTM A-572, Fy= 50 KSI.
7. ALL COLD FORM STEEL SHALL CONFORM TO ASTM A-653, CS = TYPE B, Fy = 50 KSI Fu = 65 KSI
8. STRUCTURAL STEEL AND DECK SHALL BE IDENTIFIED FOR CONFORMITY PER CBC 2202A.1.
9. ALL ROOF DECKS SHALL HAVE KYNAR 500 METAL COATING.
10. ALL ROOF DECKS SHALL CONFORM TO ASTM A-792, Fy = 50 KSI.
11. ALL BASE CONNECTIONS ARE A PART OF THE LATERAL FORCE RESISTING SYSTEM

NOTICE OF DISCLAIMER FOR STRUCTURAL ENGINEERING RESPONSIBILITY

1. PER TITLE 24, PART 1, SECTION 4-316(e) OF THE CALIFORNIA CODE OF REGULATIONS, THIS NOTICE SHALL BE GIVEN TO DSA PRIOR TO THE APPROVAL OF PLANS AND SPECIFICATIONS.
2. FOR THE SITE SPECIFIC PROJECT, J. R. MILLER & ASSOCIATES IS NOT THE DESIGN PROFESSIONAL IN GENERAL RESPONSIBLE CHARGE.
3. FOR THE SITE SPECIFIC PROJECT, J.R. MILLER & ASSOCIATES' RESPONSIBILITY IS LIMITED TO THE PREPARATION OF THE PLANS AND SPECIFICATIONS FOR THE SHELTERS OF THIS PC ONLY.
4. STRUCTURAL OBSERVATION OF CONSTRUCTION IS SPECIFICALLY EXCLUDED FROM J.R. MILLER & ASSOCIATES' RESPONSIBILITY FOR THE SITE SPECIFIC PROJECT.
5. ALL CONSTRUCTION ACTIVITIES RELATED TO STRUCTURAL ENGINEERING SHALL BE DELEGATED TO A QUALIFIED ENGINEER BY THE DESIGN PROFESSIONAL IN GENERAL RESPONSIBLE CHARGE. THESE ACTIVITIES INCLUDE, BUT ARE NOT LIMITED TO, STRUCTURAL OBSERVATION OF CONSTRUCTION, REVIEW OF INSPECTION REPORTS, AND SIGNING OFF OF THE VERIFIED REPORT FOR COMPLETED WORK.
6. J.R. MILLER & ASSOCIATES WILL BE RESPONSIBLE FOR RESPONDING TO QUESTIONS PERTAINING TO THE PLANS AND SPECIFICATIONS FOR THE SHELTERS OF THIS PC WHICH ARISE DURING PLAN REVIEW AND CONSTRUCTION.

CONSTRUCTION NOTES

1. A DSA-CERTIFIED CLASS 3 (MINIMUM) PROJECT INSPECTOR IS REQUIRED FOR THIS PROJECT.
2. CHANGES TO THE APPROVED DRAWINGS AND SPECIFICATIONS SHALL BE MADE BY ADDENDA OR CONSTRUCTION CHANGE DOCUMENT (CCD) APPROVED BY DSA, AS REQUIRED BY SECTION 4-338, PART 1, TITLE 24, CCR.
3. A "DSA CERTIFIED" PROJECT INSPECTOR EMPLOYED BY THE DISTRICT (OWNER) AND APPROVED BY DSA SHALL PROVIDE CONTINUOUS INSPECTION OF WORK, THE DUTIES OF THE INSPECTOR ARE DEFINED IN SECTION 4-342, PART 1, TITLE 24, CCR.
4. A DSA ACCEPTED TESTING LABORATORY DIRECTLY EMPLOYED BY THE DISTRICT (OWNER) SHALL CONDUCT ALL THE REQUIRED TESTS AND INSPECTIONS FOR THE PROJECT.
5. THE INTENT OF THESE DRAWINGS AND SPECIFICATIONS ARE THAT ALL THE WORK OF THE ALTERATION, REHABILITATION OR RECONSTRUCTION IS TO BE IN ACCORDANCE WITH TITLE 24, CCR. SHOULD ANY EXISTING CONDITIONS SUCH AS DETERIORATION OR NON-COMPLYING CONSTRUCTION BE DISCOVERED WHICH IS NOT COVERED BY THE CONTRACT DOCUMENTS WHEREIN THE FINISHED WORK WILL NOT COMPLY WITH TITLE 24, CCR, A CONSTRUCTION CHANGE DOCUMENT (CCD), OR A SEPARATE SET OF PLANS AND SPECIFICATIONS, DETAILING AND SPECIFYING THE REQUIRED WORK SHALL BE SUBMITTED TO AND APPROVED BY DSA BEFORE PROCEEDING WITH THE WORK. (SECTION 4-317(c), PART 1, TITLE 24, CCR)
6. GRADING PLANS, DRAINAGE IMPROVEMENTS, ROAD AND ACCESS REQUIREMENTS AND ENVIRONMENTAL HEALTH CONSIDERATIONS SHALL COMPLY WITH ALL LOCAL ORDINANCES

WELDING:

1. ALL WELDING SHALL COMPLY WITH AWS D1.1 SPECIFICATIONS AND SHALL BE DONE BY AWS QUALIFIED WELDERS CERTIFIED FOR THE TYPE OF WELDING TO BE PERFORMED AS REQUIRED BY DSA.
2. ALL WELDING SHALL BE DONE BY GAS METAL ARC PROCESS WITH E70XX ELECTRODES. FLUX CORE ARC WELD SHALL CONFORM TO CHARPY NOTCH TOUGHNESS RATING OF 20 ft-lb @ (0° F).
3. ALL WELDING SHALL BE DONE IN THE SHOP WITH REQUIRED INSPECTION, PRE-APPROVED BY DSA, TO ENSURE PROPER MATERIAL ID AND WELDING.
4. WELD FILLER METAL MANUFACTURER SHALL PROVIDE WRITTEN CERTIFICATION OF COMPLIANCE WITH CODE AND SPECIFICATIONS.

BOLTING:

1. ALL BOLTS SHOWN ON THESE DRAWINGS ARE HOT DIPPED GALVANIZED ASTM F3125 GRADE A325 HIGH STRENGTH BOLTS (UNO), WITH THE NUTS CONFORMING TO HOT DIPPED GALVANIZED ASTM A-563 GRADE DH.
2. HIGH STRENGTH BOLTS SHALL BE VERIFIED AND INSPECTED PER CBC 1705A2.1.
3. BEFORE ERECTING THE FRAME, VERIFY ALL BOLTS AND NUTS ARE CLEAN OF DEBRIS AND BURRS - INCLUDING THE HARDWARE ALREADY FASTENED INSIDE THE MEMBERS. CHASING SOME OF THE BOLTS AND NUTS MAY BE REQUIRED.
4. HARDENED STEEL WASHERS SHALL CONFORM TO ASTM F-436.
5. THE BOLTING INSTALLATION REQUIREMENTS OUTLINED BELOW ARE CRITICAL TO THE STRUCTURE'S DESIGN AND PERFORMANCE. THE INSTALLER IS REQUIRED TO COORDINATE THIS PHASE OF CONSTRUCTION WITH THE SPECIAL BOLTING INSPECTOR AND THE INSPECTOR OF RECORD PRIOR TO THE ERECTION OF THE FRAME BE INSTALLED AND INSPECTED PER THE APPLICABLE VERSION OF AISC'S USING HIGH-STRENGTH BOLTS", CBC 1705A.2.1; AISC 341-16 J7; AISC 360-16 N5.6.

   A) PRETENSIONED JOINTS MUST BE INSTALLED AND INSPECTED TO MEET ONE OF THE FOLLOWING REQUIREMENTS:
      1. TURN-OF-NUT PRETENSIONING: PER SECTION 8.2.1 OF THE *SPECIFICATION FOR STRUCTURAL JOINTS USING HIGH STRENGTH BOLTS* , WASHERS ARE NOT REQUIRED FOR THIS METHOD, THE NUT OR HEAD SHALL BE ROTATED AS SPECIFIED IN TABLE 8.2. THE PART NOT TURNED SHALL BE PREVENTED FROM ROTATING.
      2. CALIBRATED WRENCH: PER THE *SPECIFICATION FOR STRUCTURAL JOINTS USING HIGH STRENGTH BOLTS*, WASHERS ARE REQUIRED (NOT SUPPLIED BY ICON) THESE SHALL BE INSTALLED PER THE INSTALLATION TORQUE DETERMINED IN THE PRE-INSTALLATION VERIFICATION OF THE FASTENER ASSEMBLY PER SECTION 7. THE PART NOT TURNED SHALL BE PREVENTED FROM ROTATING.
      3. IDENTIFIED ON THE FRAME CONNECTION DETAILS WITH "PT REQUIRED"

   B) ALL OTHER JOINTS MUST BE INSTALLED AND INSPECTED TO MEET THE REQUIREMENTS OF THE SNUG-TIGHTENED JOINTS. SNUG TIGHT CONDITION EXISTS WHEN ALL PLIES IN A CONNECTION HAVE BEEN PULLED INTO FIRM CONTACT BY THE BOLTS IN THE JOINT AND ALL OF THE BOLTS IN THE JOINT HAVE BEEN TIGHTENED SUFFICIENTLY TO PREVENT REMOVAL OF THE NUTS WITHOUT THE USE OF A WRENCH.

FOUNDATIONS:

1. ALLOWABLE SOIL PRESSURES ASSUME CLASS 5 SOIL CLASSIFICATION PER CBC TABLE 1806A, UNLESS NOTED OTHERWISE. PASSIVE PRESSURE IS ASSUMED TO START 12" BELOW TOP OF FOOTING.
2. PER CBC SECTION 1803A.2, GEOTECHNICAL REPORTS ARE NOT REQUIRED FOR ONE-STORY LIGHT-STEEL FRAME BUILDINGS OF TYPE II CONSTRUCTION AND 4,000 SQUARE FOOT OR LESS IN FLOOR AREA AND NOT LOCATED WITHIN EARTHQUAKE FAULT ZONESOR SIESMIC HAZARD ZONES AS SHOWN ON THE MOST RECENT MAPS PUBLISHED BY THE CGS. ALLOWABLE FOUNDATION AND LATERAL SOIL PRESSURE VALUES MAY BE DETERMINED FROM TABLE 1806A.2.
3. FILL AND BACKFILL SHALL BE COMPACTED TO 95% OF MAX. DENSITY IN ACCORDANCE WITH ASTM TEST METHOD D-1557 OR AS RECOMMENDED BY THE GEO-TECH ENGINEER. FLOODING NOT PERMITTED.
4. THE CONTRACTOR SHALL BE RESPONSIBLE FOR ALL SHORING, ETC. NECESSARY TO SUPPORT CUT AND/OR FILL BANKS DURING EXCAVATION, AND FORMING AND PLACEMENT OF CONCRETE.
5. MINIMUM SETBACK FROM TOE OF SLOPE ON AN ASCENDING SLOPE SHALL BE 15 FEET AND MINIMUM SETBACK FROM TOE OF SLOPE ON A DESCENDING SLOPE SHALL BE 40 FEET
6. PER CBC SECTION 1803A.6, GEOHAZARD REPORTS ARE NOT REQUIRED FOR ONE-STORY LIGHT-STEEL FRAME BUILDINGS OF TYPE II CONSTRUCTION AND 4,000 SQUARE FOOT OR LESS IN FLOOR AREA AND NOT LOCATED WITHIN EARTHQUAKE FAULT ZONESOR SIESMIC HAZARD ZONES AS SHOWN ON THE MOST RECENT MAPS PUBLISHED BY THE CGS.
7. GEOHAZRD REPORTS ARE TO COMPLY WITH DSA IR A-4 PER IR-7 SECTION 1.8
8. SITE SPECIFIC GEOTECHNICAL REPORT IS REQUIRED AT THE TIME OF SITE APPLICATION IF USING OTHER THAN CLASS 5 SOIL, PER DSA IR PC-7
9. LATERAL BEARING HAS BEEN INCREASED PER CBC 1806A.3.4 FOR THE 1/2" DEFLECTION & HAS BEEN DESIGNED FOR P-DELTA EFFECTS. NO 1/3 INCREASE HAS BEEN APPLIED.
10. MINIMUM CLEARANCE BETWEEN PIERS SHALL BE 8'-0".

CONCRETE:

1. MIX DESIGN REQUIREMENTS: (NORMAL WEIGHT CONCRETE)

STRENGTH Pc (28 DAYS)	W/C RATIO (NON-AIR ENTRAINED)	W/C RATIO (AIR ENTRAINED)	SLUMP (±1")	UNIT WEIGHT (NORMAL WEIGHT)
5000 PSI	0.44	0.35	3"	150 PCF

2. CONCRETE MIX DESIGN PARAMETERS ARE GOOD FOR EXPOSURE CATEGORIES F0, F1 & F2. THE AIR ENTRAINMENT FOR THESE CATEGORIES SHALL BE AS FOLLOWS: F0-0, F1-4.5, F2-6
3. CHANGES TO THE MIX DESIGN MUST BE APPROVED BY THE ENGINEER OR ARCHITECT OF RECORD AND DSA.
4. AGGREGATES SHALL CONFORM TO THE ASTM C-33 WITH PROVEN SHRINKAGE CHARACTERISTICS OF LESS THAN 0.005. MAX AGGREGATE SIZE = 1".
5. CEMENT SHALL CONFORM TO ASTM C-150 (TYPE V) UNLESS NOTED OTHERWISE ON THE DRAWINGS.
6. CONCRETE SHALL BE MAINTAINED IN A MOIST CONDITION FOR A MINIMUM OF FIVE DAYS AFTER PLACEMENT. ALTERNATE METHODS WILL BE APPROVED IF SATISFACTORY PERFORMANCE CAN BE ASSURED.
7. CONCRETE SHALL NOT FREE FALL MORE THAN FIVE FEET.
8. CONCRETE DURABILITY SHALL BE PER CBC 1904A.1 ACI 318-19, CHAPTER 19.
9. CONCRETE SHALL BE TESTED PER CBC 1903A, TABLE 1705A.3. AND ACI 318-19, SECTION 26.12.
10. NO ADMIXTURE SHALL CONTAIN CALCIUM CHLORIDE.

REINFORCING STEEL:

1. REINFORCING STEEL SHALL BE DEFORMED STEEL CONFORMING TO THE REQUIREMENTS OF ASTM A-615, AS FOLLOWS:
   GR 60: (#4 BARS AND LARGER)
   GR 40: (#3 BARS)
2. DETAILING, FABRICATION, AND ERECTION OF REINFORCING BARS SHALL CONFORM TO THE ACI "MANUAL OF STANDARD PRACTICE FOR DETAILING REINFORCING CONCRETE STRUCTURES."
3. MIN. COVER FOR CAST-IN-PLACE CONCRETE SHALL BE AS FOLLOWS:
   A. CAST AGAINST EARTH .....3"
   B. CAST AGAINST FORM BELOW GRADE .....2"
   C. FORMED SLABS (#11 BAR & SMALLER).....3/4"
   D. SLABS ON GRADE (FROM TOP OF SLAB).....1"
4. BARS SHALL BE CLEAN OF RUST, GREASE OR OTHER MATERIAL LIKELY TO IMPAIR BOND. BENDS SHALL BE MADE COLD.
5. REINFORCING SHALL BE LAP SPLICED PER ACI 318-19, SECTION 25.5.
6. PRIOR TO PLACING OF CONCRETE, REINFORCING STEEL AND EMBEDDED ITEMS SHALL BE WELL SECURED IN POSITION.
7. WELDING OF REINFORCING IS NOT ALLOWED.
8. REINFORCING STEEL SHALL BE INSPECTED PER CBC 1705A.3.

POWDER-COAT FINISH SYSTEM:

ALL BUILDINGS THAT HAVE A POWDER-COATED FINISH SHALL MEET THE FOLLOWING SPECIFICATIONS:

1. THE STEEL FRAME (HSS SECTIONS, COLD FORMED & PLATE STEEL) SHALL BE SHOT-BLASTED TO A NEAR WHITE CONDITION PER SSPC-10 SPECIFICATIONS.
2. THE STEEL SHALL BE WASHED IN A ZINC PHOSPHATE IN AN MINIMUM THREE STAGE ELECTRO DEPOSITION PRE-TREATEMENT PROCESS.
3. IMMEDIATELY FOLLOWING PRE-TREATMENT THE STEEL SHALL BE TOTALLY COATED IN AN EPOXY PRIMER TO A UNIFORM THICKNESS OF A MINIMUM OF 0.7 TO 0.9 MILS. THE E-COATING SHALL PROVIDE A MINIMUM OF 1000 HOURS OF SALT SPRAY CORROSION PROTECTION TO THE STEEL.
4. THE STEEL SHALL THEN HAVE A TGIC POLYESTER COLOR COAT APPLIED OVER THE E-COATED SURFACE.
5. THE FINISH THICKNESS OF THESE APPLICATIONS SHALL BE A MINIMUM OF 8 TO 12 MILS.
6. ALL CARBON STEEL MEMBERS (COLUMNS, BEAMS, PLATES, & COLD FORMED STEEL ETC.) NOT POWDER-COATED SHALL BE PAINTED WITH PRIME COAT PER THE "AISC CODE OF STANDARD PRACTICE" AND THE "AISC SPECIFICATION SECTION M3"(UNLESS NOTED OTHERWISE).

ICON STD	RH/DSA-PC
DRAWN BY	JD
DATE	7/25/2023
REV	
REV DATE	

JRMA
ARCHITECTS ENGINEERS
2700 SATURN STREET, CA 92821
T. 714.524.1870 F. 714.524.1875
WWW.JRMA.COM

REGISTERED PROFESSIONAL ENGINEER
JOHN R. DUNN
No. S5400
STRUCTURAL
STATE OF CALIFORNIA

Oct 04, 2023

APPROVED
DIV. OF THE STATE ARCHITECT
APP: 04-122375 PC
REVIEWED FOR
SS ☑ FLS ☑ ACS ☑ CG ☐
DATE: 10/10/2023

GENERAL INFO

ICON Shelter Systems Inc
DISTINCTIVE STEEL SHELTERS
WWW.ICONSHELTERS.COM

COPYRIGHT 2004, ICON SHELTER SYSTEMS, INC.

1455 LINCOLN AVE
HOLLAND MI, 49423

616.396.0919
800.748.0985
616.396.0944 FX

PRE-CHECK (PC) DOCUMENT
Code: 2022 CBC
A separate project application for construction is required.

LS1.1
AD 1.03

PRINTED ON :

DSA 103-22: LISTING OF STRUCTURAL TESTS & SPECIAL INSPECTIONS, 2022 CBC

Application Number: 04-122188
School Name: PC Update
School District: PC Update
DSA File Number:
Increment Number:
Date Created: 2023-04-19 08:36:32

2022 CBC

IMPORTANT: This form is only a summary list of structural tests and some of the special inspections required for the project. Generally, the structural tests and special inspections noted on this form are those that will be performed by the Geotechnical Engineer of Record, Laboratory of Record, or Special Inspector. The actual complete test and inspection program must be performed as detailed on the DSA approved documents. The appendix at the bottom of this form identifies work NOT subject to DSA requirements for special inspection or structural testing. The project inspector is responsible for providing inspection of all facets of construction, including but not limited to, special inspections not listed on this form such as structural wood framing, high-load wood diaphragms, cold-formed steel framing, anchorage of non-structural components, etc., per Title 24, Part 2, Chapter 17A (2022 CBC).

**NOTE: Undefined section and table references found in this document are from the CBC, or California Building Code.

KEY TO COLUMNS

1. TYPE	2. PERFORMED BY
Continuous – Indicates that a continuous special inspection is required	GE (Geotechnical Engineer) – Indicates that the special inspection shall be performed by a registered geotechnical engineer or his or her authorized representative. LOR (Laboratory of Record) – Indicates that the test or special inspection shall be performed by a testing laboratory accepted in the DSA Laboratory Evaluation and Acceptance (LEA) Program. See CAC Section 4-335.
Periodic – Indicates that a periodic special inspection is required	PI (Project Inspector) – Indicates that the special inspection may be performed by a project inspector when specifically approved by DSA.
Test – Indicates that a test is required	SI (Special Inspection) – Indicates that the special inspection shall be performed by an appropriately qualified/approved special inspector.

DSA 103-22: LISTING OF STRUCTURAL TESTS & SPECIAL INSPECTIONS (SOILS), 2022 CBC

Table 1705A.6, Table 1705A.7, Table 1705A.8

Application Number: 04-122188
School Name: PC Update
School District: PC Update
DSA File Number:
Increment Number:
Date Created: 2023-04-19 08:36:32

Geotechnical Reports: Project has a geotechnical report, or CDs indicate soils special inspection is required by GE

	S1. GENERAL:			
	Test or Special Inspection	Type	Performed By	Code References and Notes
☑	a. Verify that: • Site has been prepared properly prior to placement of controlled fill and/or excavations for foundations. • Foundation excavations are extended to proper depth and have reached proper material. • Materials below footings are adequate to achieve the design bearing capacity.	Periodic	GE*	* By geotechnical engineer or his or her qualified representative. (See Appendix (end of this form) form for exemptions.)

	S2. SOIL COMPACTION AND FILL:			
	Test or Special Inspection	Type	Performed By	Code References and Notes
☐	a. Perform classification and testing of fill materials.	Test	LOR*	* Under the supervision of the geotechnical engineer.
☑	b. Verify use of proper materials, densities and inspect lift thicknesses, placement and compaction during placement of fill.	Continuous	GE*	* By geotechnical engineer or his or her qualified representative. (Refer to specific items identified in the Appendix (end of this form) form for exemptions where soils SI and testing may be conducted under the supervision of a geotechnical engineer or LOR's engineering manager. In such cases, the LOR's form DSA 291 shall satisfy the soil SI and test reporting requirements for the exempt items.)
☑	c. Compaction testing.	Test	LOR*	* Under the supervision of the geotechnical engineer. (Refer to specific items identified in the Appendix (end of this form) for exemptions where soils testing may be conducted under the supervision of a geotechnical engineer or LOR's engineering manager. In such cases, the LOR's form DSA 291 shall satisfy the soil test reporting requirements for the exempt items.)

DSA 103-22: LISTING OF STRUCTURAL TESTS & SPECIAL INSPECTIONS (SOILS), 2022 CBC

Table 1705A.6, Table 1705A.7, Table 1705A.8

Application Number: 04-122188
School Name: PC Update
School District: PC Update
DSA File Number:
Increment Number:
Date Created: 2023-04-19 08:36:32

	S3. DRIVEN DEEP FOUNDATIONS (PILES):			
	Test or Special Inspection	Type	Performed By	Code References and Notes
☐	a. Verify pile materials, sizes and lengths comply with the requirements.	Continuous	GE*	* By geotechnical engineer or his or her qualified representative.
☐	b. Determine capacities of test piles and conduct additional load tests as required.	Test	LOR*	* Under the supervision of the geotechnical engineer.
☐	c. Inspect driving operations and maintain complete and accurate records for each pile.	Continuous	GE*	* By geotechnical engineer or his or her qualified representative.
☐	d. Verify locations of piles and their plumbness, confirm type and size of hammer, record number of blows per foot of penetration, determine required penetrations to achieve design capacity, record tip and butt elevations and record any pile damage.	Continuous	GE*	* By geotechnical engineer or his or her qualified representative.
☐	e. Steel piles.	Provide tests and inspections per STEEL section below.		
☐	f. Concrete piles and concrete filled piles.	Provide tests and inspections per CONCRETE section below.		
☐	g. For specialty piles, perform additional inspections as determined by the registered design professional in responsible charge.	*	*	* As defined on drawings or specifications.

	S4. CAST-IN-PLACE DEEP FOUNDATIONS (PIERS):			
	Test or Special Inspection	Type	Performed By	Code References and Note
☐	a. Inspect drilling operations and maintain complete and accurate records for each pier.	Continuous	GE*	* By geotechnical engineer or his or her qualified representative. (See Appendix (end of this form) for exemptions.)

DSA 103-22: LISTING OF STRUCTURAL TESTS & SPECIAL INSPECTIONS (SOILS), 2022 CBC

Table 1705A.6, Table 1705A.7, Table 1705A.8

Application Number: 04-122188
School Name: PC Update
School District: PC Update
DSA File Number:
Increment Number:
Date Created: 2023-04-19 08:36:32

	Test or Special Inspection	Type	Performed By	Code References and Note
☐	b. Verify pier locations, diameters, plumbness, bell diameters (if applicable), lengths and embedment into bedrock (if applicable); record concrete or grout volumes.	Continuous	GE*	* By geotechnical engineer or his or her qualified representative. (See Appendix (end of this form) for exemptions.)
☐	c. Confirm adequate end strata bearing capacity.	Continuous	GE*	* By geotechnical engineer or his or her qualified representative. (See Appendix (end of this form) for exemptions.)
☐	d. Concrete piers.	Provide tests and inspections per CONCRETE section below.		

	S5. RETAINING WALLS:			
	Test or Special Inspection	Type	Performed By	Code References and Notes
☐	a. Placement, compaction and inspection of backfill.	Continuous	GE*	1705A.6.1. * By geotechnical engineer or his or her qualified representative. (See section S2 above).
☐	b. Placement of soil reinforcement and/or drainage devices.	Continuous	GE*	* By geotechnical engineer or his or her qualified representative.
☐	c. Segmental retaining walls; inspect placement of units, dowels, connectors, etc.	Continuous	GE*	* By geotechnical engineer or his or her qualified representative. See DSA IR 18-2.
☐	d. Concrete retaining walls.	Provide tests and inspections per CONCRETE section below.		
☐	e. Masonry retaining walls.	Provide tests and inspections per MASONRY section below.		

DSA 103-22: LISTING OF STRUCTURAL TESTS & SPECIAL INSPECTIONS (SOILS), 2022 CBC

Table 1705A.6, Table 1705A.7, Table 1705A.8

Application Number: 04-122188
School Name: PC Update
School District: PC Update
DSA File Number:
Increment Number:
Date Created: 2023-04-19 08:36:32

	S6. OTHER SOILS:			
	Test or Special Inspection	Type	Performed By	Code References and Notes
☐	a. Soil Improvements	Test	GE*	Submit a comprehensive report documenting final soil improvements constructed, construction observation and the results of the confirmation testing and analysis to CGS (California Geological Survey) for final acceptance. * By geotechnical engineer or his or her qualified representative.
☐	b. Inspection of Soil Improvements	Continuous	GE*	* By geotechnical engineer or his or her qualified representative.
☐	c.			

DSA 103-22: LISTING OF STRUCTURAL TESTS & SPECIAL INSPECTIONS (CONCRETE), 2022 CBC

Table 1705A.3; ACI 318-19 Sections 26.12 & 26.13

Application Number: 04-122188
School Name: PC Update
School District: PC Update
DSA File Number:
Increment Number:
Date Created: 2023-04-19 08:36:32

	C1. CAST-IN-PLACE CONCRETE			
	Test or Special Inspection	Type	Performed By	Code References and Notes
☑	a. Verify use of required design mix.	Periodic	SI	Table 1705A.3 Item 5, 1910A.1.
☑	b. Identify, sample, and test reinforcing steel.	Test	LOR	1910A.2; ACI 318-19 Ch.20 and Section 26.6.1.2; DSA IR 17-10. (See Appendix (end of this form) for exemptions.)
☑	c. During concrete placement, fabricate specimens for strength tests, perform slump and air content tests, and determine the temperature of the concrete.	Test	LOR	Table 1705A.3 Item 6; ACI 318-19 Sections 26.5 & 26.12.
☑	d. Test concrete (f'_c).	Test	LOR	1905A.1.17; ACI 318-19 Section 26.12.
☐	e. Batch plant inspection:	See Notes	SI	Default of 'Continuous' per 1705A.3.3. If approved by DSA, batch plant inspection may be reduced to 'Periodic' subject to requirements in Section 1705A.3.3.1, or eliminated per 1705A.3.3.2. See IR 17-13. (See Appendix (end of this form) for exemptions.)
☐	f. Welding of reinforcing steel.	Provide special inspection per STEEL, Category S/A4(d) & (e) and/or S/A5(g) & (h) below.		

	C2. PRESTRESSED / POST-TENSIONED CONCRETE (IN ADDITION TO SECTION C1):			
	Test or Special Inspection	Type	Performed By	Code References and Notes
☐	a. Sample and test prestressing tendons and anchorages.	Test	LOR	1705A.3.4, 1910A.3
☐	b. Inspect placement of prestressing tendons.	Periodic	SI	1705A.3.4, Table 1705A.3 Items 1 & 9.

DSA 103-22: LISTING OF STRUCTURAL TESTS & SPECIAL INSPECTIONS (CONCRETE), 2022 CBC

Table 1705A.3; ACI 318-19 Sections 26.12 & 26.13

Application Number: 04-122188
School Name: PC Update
School District: PC Update
DSA File Number:
Increment Number:
Date Created: 2023-04-19 08:36:32

	Test or Special Inspection	Type	Performed By	Code References and Notes
☐	c. Verify in-situ concrete strength prior to stressing of post-tensioning tendons.	Periodic	SI	Table 1705A.3 Item 13. Special inspector to verify specified concrete strength test prior to stressing.
☐	d. Inspect application of post-tensioning or prestressing forces and grouting of bonded prestressing tendons.	Continuous	SI	1705A.3.4, Table 1705A.3 Item 9; ACI 318-14 Section 26.13

	C3. PRECAST CONCRETE (IN ADDITION TO SECTION C1):			
	Test or Special Inspection	Type	Performed By	Code References and Notes
☐	a. Inspect fabrication of precast concrete members.	Continuous	SI	ACI 318-19 Section 26.13.
☐	b. Inspect erection of precast concrete members.	Periodic	SI*	Table 1705A.3 Item 10. * May be performed by PI when specifically approved by DSA.
☐	c. For precast concrete diaphragm connections or reinforcement at joints classified as moderate or high deformability elements (MDE or HDE) in structures assigned to Seismic Design Category D, E or F, inspect such connections and reinforcement in the field for: 1. Installation of the embedded parts 2. Completion of the continuity of reinforcement across joints. 3. Completion of connections in the field.	Continuous	SI	Table 1705A.3; ACI 318-19 Section 26.13.1.3; ACI 550.5
☐	d. Inspect installation tolerances of precast concrete diaphragm connections for compliance with ACI 550.5.	Periodic	SI	Table 1705A.3; ACI 318-19 Section 26.13.1.3; ACI 550.5

DSA 103-22: LISTING OF STRUCTURAL TESTS & SPECIAL INSPECTIONS (CONCRETE), 2022 CBC

Table 1705A.3; ACI 318-19 Sections 26.12 & 26.13

Application Number: 04-122188
School Name: PC Update
School District: PC Update
DSA File Number:
Increment Number:
Date Created: 2023-04-19 08:36:32

	C4. SHOTCRETE (IN ADDITION TO SECTION C1):			
	Test or Special Inspection	Type	Performed By	Code References and Notes
☐	a. Inspect shotcrete placement for proper application techniques.	Continuous	SI	1705A.3.9, Table 1705A.3 Item 7, 1908A.1, 1908A.2, 1908A.3. See ACI 506.2-13 Section 3.4, ACI 506R-16.
☐	b. Sample and test shotcrete (f'_c).	Test	LOR	1908A.2, 1705A.3.9

	C5. POST-INSTALLED ANCHORS:			
	Test or Special Inspection	Type	Performed By	Code References and Notes
☐	a. Inspect installation of post-installed anchors	See Notes	SI*	1617A.1.19, Table 1705A.3 Item 4a (Continuous) & 4b (Periodic), 1705A.3.8 (See Appendix (end of this form) for exemptions). ACI 318-14 Sections 17.8 & 26.13. * May be performed by the project inspector when specifically approved by DSA.
☐	b. Test post-installed anchors.	Test	LOR	1910A.5. (See Appendix (end of this form) for exemptions.)

	C6. OTHER CONCRETE:			
	Test or Special Inspection	Type	Performed By	Code References and Notes
☐	a.			

DSA 103-22: LISTING OF STRUCTURAL TESTS & SPECIAL INSPECTIONS (STEEL AND ALUMNINUM), 2022 CBC

1705A.2.1, Table 1705A.2.1; AISC 303-16, AISC 341-16, AISC 358-16, AISC 360-16; AISI S100-20; RCSC 2014; AWS D1.1, AWS D1.2, AWS D1.3, AWS D1.4, AWS D1.8

Application Number: 04-122188
School Name: PC Update
School District: PC Update
DSA File Number:
Increment Number:
Date Created: 2023-04-19 08:36:32

	S/A1. STRUCTURAL STEEL, COLD-FORMED STEEL AND ALUMINUM USED FOR STRUCTURAL PURPOSES			
	Test or Special Inspection	Type	Performed By	Code References and Notes
☑	a. Verify identification of all materials and: • Mill certificates indicate material properties that comply with requirements. • Material sizes, types and grades comply with requirements.	Periodic	*	Table 1705A.2.1 Item 3a–3c. 2202A.1; AISI S100-20 Section A3.1 & A3.2, AISI S240-20 Section A3 & A5, AISI S220-20 Sections A4 & A6. * By special inspector or qualified technician when performed off-site.
☑	b. Test unidentified materials	Test	LOR	2202A.1.
☑	c. Examine seam welds of HSS shapes	Periodic	SI	DSA IR 17-3.
☑	d. Verify and document steel fabrication per DSA-approved construction documents.	Periodic	SI	Not applicable to cold-formed steel light-frame construction, except for trusses (1705A.2.4).
☐	e. Buckling restrained braces.	Test	LOR	Testing and special inspections in accordance with IR 22-4.

	S/A2. HIGH-STRENGTH BOLTS:			
	Test or Special Inspection	Type	Performed By	Code References and Notes
☑	a. Verify identification markings and manufacturer's certificates of compliance conform to ASTM standards specified in the DSA-approved documents.	Periodic	SI	Table 1705A.2.1 Items 1a & 1b, 2202A.1; AISC 360-16 Section A3.3, J3.1, and N3.2; RCSC 2014 Section 1.5 & 2.1; DSA IR 17-8 & DSA IR 17-9.
☑	b. Test high-strength bolts, nuts and washers.	Test	LOR	Table 1705A.2.1 Item 1c, 2213A.1; RCSC 2014 Section 7.2; DSA IR 17-8.
☑	c. Bearing-type ("snug tight") connections.	Periodic	SI	Table 1705A.2.1 Item 2a, 1705A.2.6, 2204A.2; AISC 360-16 J3.1, J3.2, M2.5 & N5.6; RCSC 2014 Section 9.1; DSA IR 17-9.
☑	d. Pretensioned and slip-critical connections.	*	SI	Table 1705A.2.1 Items 2b & 2c, 1705A.2.6, 2204A.2; AISC 360-16 J3.1, J3.2, M2.5 & N5.6; RCSC 2014 Sections 9.2 & 9.3; DSA IR 17-9. "Continuous" or "Periodic" depends on the tightening method used.

ICON STD	RH/DSA-PC
DRAWN BY	JD
DATE	7/25/2023
REV	
REV DATE	

JRMA
ARCHITECTS ENGINEERS
2700 SATURN ST I BREA, CA 92821
T. 714.524.1870 I F. 714.524.1875
WWW.JRMA.COM

REGISTERED PROFESSIONAL ENGINEER
WILLIAM D. ROHR
No. S5802
STRUCTURAL
STATE OF CALIFORNIA
Oct 04, 2023

APPROVED
DIV. OF THE STATE ARCHITECT
APP: 04-122375 PC
REVIEWED FOR
SS ☑ FLS ☑ ACS ☑ CG ☐
DATE: 10/10/2023

DSA 103

ICON Shelter Systems Inc
DISTINCTIVE STEEL SHELTERS
WWW.ICONSHELTERS.COM
COPYRIGHT 2004, ICON SHELTER SYSTEMS, INC.
1455 LINCOLN AVE
HOLLAND MI, 49423
616.396.0919
800.748.0985
616.396.0944 FX

LS1.2
AD 1.04

PRE-CHECK (PC) DOCUMENT
Code: 2022 CBC
A separate project application for construction is required.

PRINTED ON :

DSA 103-22: LISTING OF STRUCTURAL TESTS & SPECIAL INSPECTIONS (STEEL AND ALUMNINUM), 2022 CBC

1705A.2.1, Table 1705A.2.1; AISC 303-16, AISC 341-16, AISC 358-16, AISC 360-16; AISI S100-20; RCSC 2014; AWS D1.1, AWS D1.2, AWS D1.3, AWS D1.4, AWS D1.8

Application Number: 04-122188
School Name: PC Update
School District: PC Update
DSA File Number:
Increment Number:
Date Created: 2023-04-19 08:36:32

	S/A3. WELDING:			
	Test or Special Inspection	Type	Performed By	Code References and Notes
☑	a. Verify weld filler material identification markings per AWS designation listed on the DSA-approved documents and the WPS.	Periodic	SI	1705A.2.5, Table 1705A.2.1 Items 4 & 5; AWS D1.1 and AWS D1.8 for structural steel; AWS D1.2 for Aluminum; AWS D1.3 for cold-formed steel; AWS D1.4 for reinforcing steel; DSA IR 17-3.
☑	b. Verify weld filler material manufacturer's certificate of compliance.	Periodic	SI	DSA IR 17-3.
☑	c. Verify WPS, welder qualifications and equipment.	Periodic	SI	DSA IR 17-3.

	S/A4. SHOP WELDING (IN ADDITION TO SECTION S/A3):			
	Test or Special Inspection	Type	Performed By	Code References and Notes
☑	a. Inspect groove welds, multi-pass fillet welds, single pass fillet welds > 5/16", plug and slot welds.	Continuous	SI	Table 1705A.2.1 Items 5a.1–4; AISC 360-16 (and AISC 341-16 as applicable); DSA IR 17-3.
☑	b. Inspect single-pass fillet welds ≤ 5/16", floor and roof deck welds.	Periodic	SI	1705A.2.2; Table 1705A.2.1 Items 5a.5 & 5a.6; AISC 360-16 (and AISC 341-16 as applicable); DSA IR 17-3.
☐	c. Inspect welding of stairs and railing systems.	Periodic	SI	1705A.2.1; AISC 360-16 (and AISC 341-16 as applicable); AWS D1.1 & D1.3; DSA IR 17-3.
☐	d. Verification of reinforcing steel weldability other than ASTM A706.	Periodic	SI	1705A.3.1; AWS D1.4; DSA IR 17-3. Verify carbon equivalent reported on mill certificates.
☐	e. Inspect welding of reinforcing steel.	Continuous	SI	Table 1705A.2.1 Item 5b, 1705A.3.1, Table 1705A.3 Item 2, 1903A.8; AWS D1.4; DSA IR 17-3.

DSA 103-22: LISTING OF STRUCTURAL TESTS & SPECIAL INSPECTIONS (STEEL AND ALUMNINUM), 2022 CBC

1705A.2.1, Table 1705A.2.1; AISC 303-16, AISC 341-16, AISC 358-16, AISC 360-16; AISI S100-20; RCSC 2014; AWS D1.1, AWS D1.2, AWS D1.3, AWS D1.4, AWS D1.8

Application Number: 04-122188
School Name: PC Update
School District: PC Update
DSA File Number:
Increment Number:
Date Created: 2023-04-19 08:36:32

	S/A5. FIELD WELDING (IN ADDITION TO SECTION S/A3):			
	Test or Special Inspection	Type	Performed By	Code References and Notes
☐	a. Inspect groove welds, multi-pass fillet welds, single pass fillet welds > 5/16", plug and slot welds.	Continuous	SI	Table 1705A.2.1 Items 5a.1–4; AISC 360-16 (AISC 341-16 as applicable); DSA IR 17-3.
☐	b. Inspect single-pass fillet welds ≤ 5/16".	Periodic	SI	Table 1705A.2.1 Item 5a.5; AISC 360-16 (AISC 341-16 as applicable); DSA IR 17-3.
☐	c. Inspect end-welded studs (ASTM A-108) installation (including bend test).	Periodic	SI	2213A.2; AISC 360-16 (AISC 341-16 as applicable); AWS D1.1; DSA IR 17-3.
☐	d. Inspect floor and roof deck welds.	Periodic	SI	1705A.2.2, Table 1705A.2.1 Item 5a.6; AISC 360-16 (AISC 341-16 as applicable); AWS D1.3; DSA IR 17-3.
☐	e. Inspect welding of structural cold-formed steel.	Periodic	SI*	1705A.2.5; AWS D1.3; DSA IR 17-3. The quality control provisions of AISI S240-20 Chapter D shall also apply. * May be performed by the project inspector when specifically approved by DSA.
☐	f. Inspect welding of stairs and railing systems.	Periodic	SI*	1705A.2.1; AISC 360-16 (AISC 341-16 as applicable); AWS D1.1 & D1.3; DSA IR 17-3. * May be performed by the project inspector when specifically approved by DSA.
☐	g. Verification of reinforcing steel weldability.	Periodic	SI	1705A.3.1; AWS D1.4; DSA IR 17-3. Verify carbon equivalent reported on mill certificates.
☐	h. Inspect welding of reinforcing steel.	Continuous	SI	Table 1705A.2.1 Item 5b, 1705A.3.1, Table 1705A.3 Item 2, 1903A.8; AWS D1.4; DSA IR 17-3.

DSA 103-22: LISTING OF STRUCTURAL TESTS & SPECIAL INSPECTIONS (STEEL AND ALUMNINUM), 2022 CBC

1705A.2.1, Table 1705A.2.1; AISC 303-16, AISC 341-16, AISC 358-16, AISC 360-16; AISI S100-20; RCSC 2014; AWS D1.1, AWS D1.2, AWS D1.3, AWS D1.4, AWS D1.8

Application Number: 04-122188
School Name: PC Update
School District: PC Update
DSA File Number:
Increment Number:
Date Created: 2023-04-19 08:36:32

	S/A6. NONDESTRUCTIVE TESTING:			
	Test or Special Inspection	Type	Performed By	Code References and Notes
☐	a. Ultrasonic	Test	LOR	1705A.2.1, 1705A.2.5; AISC 341-16 J6.2, AISC 360-16 N5.5; AWS D1.1, AWS D1.8; DSA IR 17-2.
☐	b. Magnetic Particle	Test	LOR	1705A.2.1, 1705A.2.5; AISC 341-16 J6.2, AISC 360-16 N5.5; AWS D1.1, AWS D1.8; DSA IR 17-2.
☐	c.	Test	LOR	

	S/A7. STEEL JOISTS AND TRUSSES:			
	Test or Special Inspection	Type	Performed By	Code References and Notes
☐	a. Verify size, type and grade for all chord and web members as well as connectors and weld filler material; verify joist profile, dimensions and camber (if applicable); verify all weld locations, lengths and profiles; mark or tag each joist.	Continuous	SI	1705A.2.3, Table 1705A.2.3; AWS D1.1; DSA IR 22-3 for steel joists only. 1705A.2.4; AWS D1.3 for cold-formed steel trusses.

DSA 103-22: LISTING OF STRUCTURAL TESTS & SPECIAL INSPECTIONS (STEEL AND ALUMNINUM), 2022 CBC

1705A.2.1, Table 1705A.2.1; AISC 303-16, AISC 341-16, AISC 358-16, AISC 360-16; AISI S100-20; RCSC 2014; AWS D1.1, AWS D1.2, AWS D1.3, AWS D1.4, AWS D1.8

Application Number: 04-122188
School Name: PC Update
School District: PC Update
DSA File Number:
Increment Number:
Date Created: 2023-04-19 08:36:32

	Test or Special Inspection	Type	Performed By	Code References and Notes
	S/A8. SPRAYED FIRE-RESISTANT MATERIALS:			
	Test or Special Inspection	Type	Performed By	Code References and Notes
☐	a. Examine structural steel surface conditions, inspect application, take samples, measure thickness and verify compliance of all aspects of application with DSA-approved documents.	Periodic	SI	1705A.15, 1705A.1, 1705A.2, 1705A.3, 1705A.4.
☐	b. Test density.	Test	LOR	1705A.15.1, 1705A.15.5, ASTM E736
☐	c. Bond strength adhesion/cohesion.	Test	LOR	1705A.15.1, 1705A.15.4, ASTM E605

	S/A9. ANCHOR BOLTS AND ANCHOR RODS:			
	Test or Special Inspection	Type	Performed By	Code References and Notes
☑	a. Anchor Bolts and Anchor Rods	Test	LOR	Sample and test anchor bolts and anchor rods not readily identifiable per procedures noted in DSA IR 17-11.
☐	b. Threaded rod not used for foundation anchorage.	Test	LOR	Sample and test threaded rods not readily identifiable per procedures noted in DSA IR 17-11.

	S/A10. STORAGE RACK SYSTEMS:			
	Test or Special Inspection	Type	Performed By	Code References and Notes
☐	a. Materials used, to verify compliance with one or more of the material test reports in accordance with the approved construction documents.	Periodic	SI	Table 1705A.13.7
☐	b. Fabricated storage rack elements.	Periodic	SI	1704A.2.5; Table 1705A.13.7

DSA 103-22: LISTING OF STRUCTURAL TESTS & SPECIAL INSPECTIONS (STEEL AND ALUMNINUM), 2022 CBC

1705A.2.1, Table 1705A.2.1; AISC 303-16, AISC 341-16, AISC 358-16, AISC 360-16; AISI S100-20; RCSC 2014; AWS D1.1, AWS D1.2, AWS D1.3, AWS D1.4, AWS D1.8

Application Number: 04-122188
School Name: PC Update
School District: PC Update
DSA File Number:
Increment Number:
Date Created: 2023-04-19 08:36:32

	Test or Special Inspection	Type	Performed By	Code References and Notes
☐	c. Storage rack anchorage installation.	Periodic	SI	ANSI/MH16.1 Section 7.3.2; Table 1705A.13.7
☐	d. Completed storage rack system to indicate compliance with the approved construction documents.	Periodic	SI*	Table 1705A.13.7; * May be preformed by the project inspector when specifically approved by DSA.

	S/A11. Other Steel			
	Test or Special Inspection	Type	Performed By	Code References and Notes
☐	a.			

DSA 103-22: LISTING OF STRUCTURAL TESTS & SPECIAL INSPECTIONS (OTHER), 2022 CBC

Application Number: 04-122188
School Name: PC Update
School District: PC Update
DSA File Number:
Increment Number:
Date Created: 2023-04-19 08:36:32

	X1. OTHER:			
	Test or Special Inspection	Type	Performed By	Code References and Notes
☐	a. Load test for identified product(s):	Test	LOR	1709A.2, 1709A.3. Testing is not required for: 1) a product with a valid evaluation service report per DSA IR A-5, or 2) a product that can be justified by structural calculation.
☐	b. Installation torque for non-HS bolts	Continuous	SI*	Applicable to communication towers identified as Essential Service Facility Projects (ESFP). Calibrated wrench use required, verified by SI during installation. DSA Policy PL 18-01: Communication Towers, Poles and Buildings Utilized by State Agencies for Essential Services Communications.*EXCEPTION: Non-ESFP may use PI without need for notification to DSA.
☐	c.			

Appendix: Work Exempt from DSA Requirements for Structural Tests / Special Inspections

Application Number: 04-122188
School Name: PC Update
School District: PC Update
DSA File Number:
Increment Number:
Date Created: 2023-04-19 08:36:32

Exempt items given in DSA IR A-22 or the 2019 CBC (including DSA amendments) and those items identified below with a check mark by the design professional are NOT subject to DSA requirements for the structural tests / special inspections noted. Items marked as exempt shall be identified on the approved construction documents. The project inspector shall verify all construction complies with the approved construction documents.

	SOILS:
☐	1. Deep foundations acting as a cantilever footing with a design based on minimum allowable pressures per CBC Table 1806A.2 and without a geotechnical report for the following cases: A) free standing sign or scoreboard, B) cell or antenna towers and poles less than 35'-0" tall (e.g., lighting poles, flag poles, poles supporting open mesh fences, etc.), C) single-story structure with dead load less than 5 psf (e.g., open fabric shade structure), or D) covered walkway structure with an apex height less than 10'-0" above adjacent grade.
☐	2. Shallow foundations, etc. are exempt from special inspections and testing by a Geotechnical Engineer for the following cases: A) buildings without a geotechnical report and meeting the exception item #1 criteria in CBC Section 1803A.2 supported by native soil (any excavation depth) or fill soil (not exceeding 12" depth per CBC Section 1804A.6), B) soil scarification/recompaction not exceeding 12" depth, C) native or fill soil supporting exterior non-structural flatwork (e.g., sidewalks, site concrete ramps, site stairs, parking lots, driveways, etc.), D) unpaved landscaping and playground areas, or E) utility trench backfill.

	CONCRETE/MASONRY:
☐	1. Post-installed anchors for the following: A) exempt non-structural components (e.g., mechanical, electrical, plumbing equipment - see item 7 for "Welding" in the Appendix below) given in CBC Section 1617A.1.18 (which replaces ASCE 7-16, Section 13.1.4) or B) interior nonstructural wall partitions meeting criteria listed in exempt item 3 for "Welding" in the Appendix below
☐	2. Concrete batch plant inspection is not required for items given in CBC Section 1705A.3.3.2 subject to the requirements and limitations in that section.
☐	3. Non-bearing non-shear masonry walls may be exempt from certain DSA masonry testing and special inspection items as allowed per DSA IR 21-1. Refer to construction documents for specific exemptions accordingly for each applicable wall condition.
☐	4. Epoxy shear dowels in site flatwork and/or other non-structural concrete.

Appendix: Work Exempt from DSA Requirements for Structural Tests / Special Inspections

Application Number: 04-122188
School Name: PC Update
School District: PC Update
DSA File Number:
Increment Number:
Date Created: 2023-04-19 08:36:32

	CONCRETE/MASONRY:
☐	5. Testing of reinforcing bars is not required for items given in CBC Section 1910A.2 subject to the requirements and limitations in that section.

	WELDING:
☐	1. Solid-clad and open-mesh fences, gates with maximum leaf span of 10', and gates with a maximum rolling section of 10' all having an apex height less than 8'-0" above lowest adjacent grade. When located above circulation or occupied space below, these gates/fences are not located within 1.5x gate/fence height (max 8'-0") to the edge of floor or roof.
☐	2. Handrails, guardrails, and modular or relocatable ramps associated with walking surfaces less than 30" above adjacent grade (excluding post base connections per the 'Exception' language in Section 1705A.2.1); fillet welds shall not be ground flush.
☐	3. Non-structural interior cold-formed steel framing spanning less than 15'-0", such as in interior partitions, interior soffits, etc. supporting only self weight and light-weight finishes or adhered tile, masonry, stone, or terra cotta veneer no more than 5/8" thickness and apex less than 20'-0" in height and not over an exit way. Maximum tributary load to a member shall not exceed the equivalent of that occurring from a 10'x10' opening in a 15' tall wall for a header or king stud.
☐	4. Manufactured support frames and curbs using hot rolled or cold-formed steel (i.e., light gauge) for mechanical, electrical, or plumbing equipment weighing less than 2000# (equipment only) (connections of such frames to superstructure elements using welding will require special inspection as noted in selected item(s) for Sections S/A3, S/A4 and/or S/A5 of listing above).
☐	5. Manufactured components (e.g., Tolco, B-Line, Afcon, etc.) for mechanical, electrical, or plumbing hanger support and bracing (connections of such components to superstructure elements using welding will require special inspection as noted in selected item(s) for Sections S/A3, S/A4 and/or S/A5 of listing above).
☐	6. TV Brackets, projector mounts with a valid listing (see DSA IR A-5) and recreational equipment (e.g., playground structures, basketball backstops, etc.) (connections of such elements to superstructure elements using welding will require special inspection as noted in selected item(s) for sections S/A3, S/A4 and/or S/A5 located in the Steel/Aluminum category of listing above).
☐	7. Any support for exempt non-structural components given in CBC Section 1617A.1.18 (which replaces ASCE 7-16, Section 13.1.4) meeting the following: A) when supported on a floor/roof, <400# and resulting composite center of mass (including component's center of mass) ≤4' above supporting floor/roof, B) when hung from a wall or roof/floor, <20# for discrete units or <5 plf for distributed systems.

DSA 103-22: LISTING OF STRUCTURAL TESTS & SPECIAL INSPECTIONS(SIGNATURE), 2022 CBC

Application Number: 04-122188
School Name: PC Update
School District: PC Update
DSA File Number:
Increment Number:
Date Created: 2023-04-19 08:36:32

Name of Architect or Engineer in general responsible charge:
Name of Structural Engineer (When structural design has been delegated):
Signature of Architect or Structural Engineer: Date:

Note: To facilitate DSA electronic mark-ups and identification stamp application, DSA recommends against using secured electronic or digital signatures.

DSA STAMP

PRE-CHECK (PC) DOCUMENT
Code: 2022 CBC
A separate project application for construction is required.

ICON STD	RH/DSA-PC
DRAWN BY	JD
DATE	7/25/2023
REV	
REV DATE	

JRMA
ARCHITECTS ENGINEERS
2700 SATURN ST I BREA, CA 92821
T. 714.524.1870 I F. 714.524.1875
WWW.JRMA.COM

REGISTERED PROFESSIONAL ENGINEER
STRUCTURAL
STATE OF CALIFORNIA
Oct 04, 2023

APPROVED
DIV. OF THE STATE ARCHITECT
APP: 04-122375 PC
REVIEWED FOR
SS ☑ FLS ☑ ACS ☑ CG ☐
DATE: 10/10/2023

DSA 103

ICON Shelter Systems Inc
DISTINCTIVE STEEL SHELTERS
WWW.ICONSHELTERS.COM
COPYRIGHT 2004 ICON SHELTER SYSTEMS, INC.
1455 LINCOLN AVE
HOLLAND MI, 49423

616.396.0919
800.748.0985
616.396.0944 FX

LS1.3
AD 1.05

PRINTED ON :

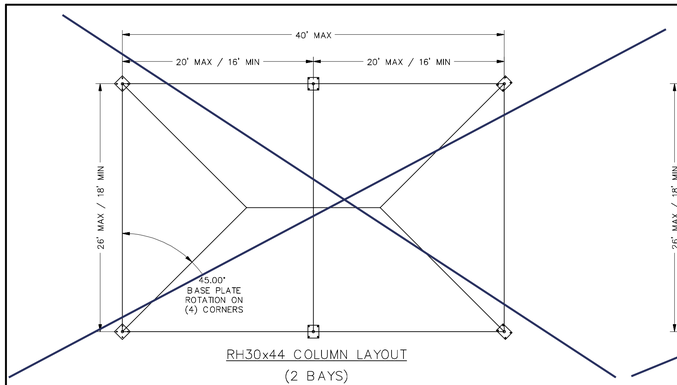

RH30x44 COLUMN LAYOUT

(2 BAYS)

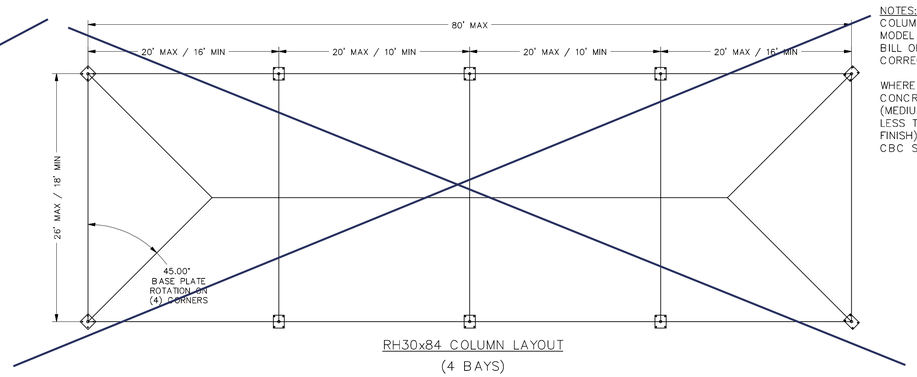

RH30x84 COLUMN LAYOUT

(4 BAYS)

NOTES:

COLUMN SIZE AND LOCATION WILL VARY DEPENDING ON MODEL TYPE ORDERED, PLEASE REFER TO JOB SPECIFIC BILL OF MATERIALS AND INSTALLATION MANUAL FOR CORRECT PLACEMENT AND SIZE.

WHERE CONCRETE SLAB SPECIFIED PORTLAND CEMENT CONCRETE PAVING SHALL HAVE A MEDIUM SALTED (MEDIUM BROOM) FINISH ON ALL SURFACES SLOPED LESS THAN 6% AND SLIP RESISTANT (HEAVY BROOM FINISH) ON ALL SURFACES SLOPED GREATER THAN 6% CBC SECTION 1133B.7.1

BASE PLATE LOCATION

	DETAIL A	DETAIL B
8'	BP1	BP2
10'	BP1	BP2
12'	BP2	BP3

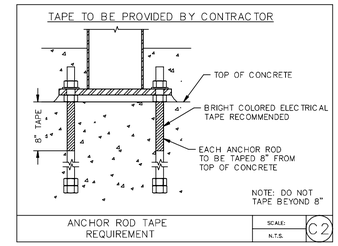

ANCHOR ROD TAPE REQUIREMENT — SCALE: N.T.S. — C2

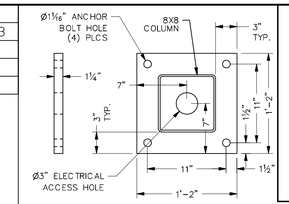

8X8 COLUMN BASE PLATE DETAIL — BP1

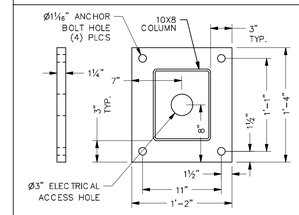

10X8 COLUMN BASE PLATE DETAIL — BP2

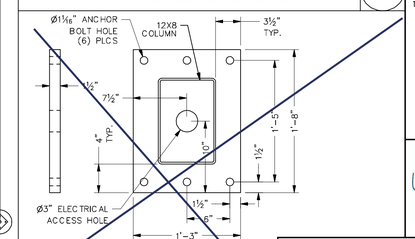

12X8 COLUMN BASE PLATE DETAIL — BP3

ALL ANCHORS RODS SHALL BE 1" X 26" U.N.O.

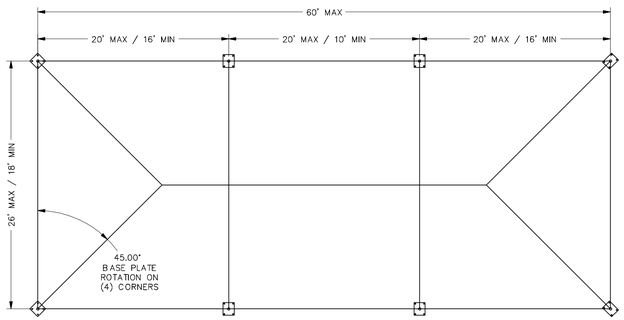

RH30x64 COLUMN LAYOUT

(3 BAYS)

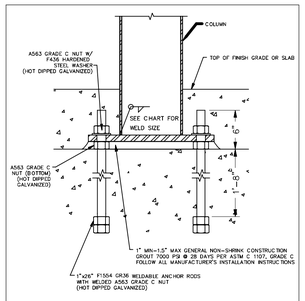

NOTES:

COLUMN BASE PLATES ARE TO HAVE DOUBLE NUTS. PLACE ONE NUT UNDER THE PLATE AND ONE NUT ON TOP WITH A WASHER UNDER THE NUT.

THE BOTTOM NUT CAN BE USED AS A LEVELING NUT.

AFTER COLUMN IS SET AND LEVELED AND THE NUTS HAVE BEEN TIGHTENED THE COLUMN MUST HAVE NON-SHRINK GROUT PLACED UNDER THE BASE PLATE BEFORE COVERING THE BASE WITH CONCRETE.

REFER TO FOOTING DETAIL FOR ROD/NUT LOCATIONS AND SIZE.

FOUNDATION ANCHORS ARE TO BE UNTORQUED.

COLUMN BASE CONNECTION DETAIL — SCALE: N.T.S. — C1

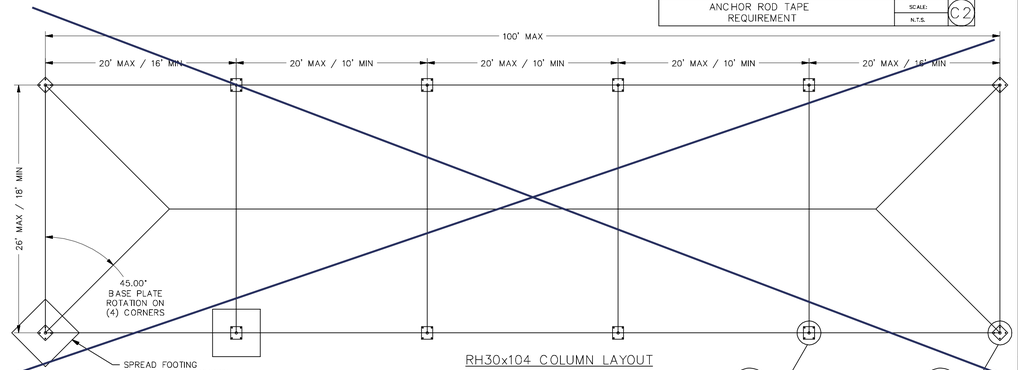

ANCHOR ROD DETAIL

1.HEAT TREATED

2.MAX CARBON CONTENT–27%

3.MAX MANGANESE CONTENT

0.6 TO 0.9%

RH30x104 COLUMN LAYOUT

(5 BAYS)

SIDE COLUMNS

CORNER COLUMNS

30' WIDE RECTANGULAR HIP

RH30 - PIER

8' height - Corner Columns				8' height - Corner Columns				8' height - Corner Columns			
Soil Class 5 - 1500 psf Bearing				Soil Class 4 - 2000 psf Bearing				Soil Class 3 - 3000 psf Bearing			
Dia (A) (in)	Depth (B) (in)	Vertical Rebar Qty	Rebar Size	Dia (A) (in)	Depth (B) (in)	Vertical Rebar Qty	Rebar Size	Dia (A) (in)	Depth (B) (in)	Vertical Rebar Qty	Rebar Size
30	114	8	6	30	98	8	6	30	88	8	6
8' height - Side Columns				8' height - Side Columns				8' height - Side Columns			
Soil Class 5 - 1500 psf Bearing				Soil Class 4 - 2000 psf Bearing				Soil Class 3 - 3000 psf Bearing			
Dia (A) (in)	Depth (B) (in)	Vertical Rebar Qty	Rebar Size	Dia (A) (in)	Depth (B) (in)	Vertical Rebar Qty	Rebar Size	Dia (A) (in)	Depth (B) (in)	Vertical Rebar Qty	Rebar Size
36	144	12	6	30	132	8	6	30	118	8	6
8' Eave - 1500 psf [ ]				8' Eave - 2000 psf [ ]				8' Eave - 3000 psf [ ]			

8' height - Corner Columns			
Rebar Dimensions			Weld
X (in)	Y (in)	Rebar Size	Fillet Weld "W"
12	47	8	1/4
8' height - Side Columns			
Rebar Dimensions			Weld
X (in)	Y (in)	Rebar Size	Fillet Weld "W"
16	59	7	1/4
8' Eave - Rebar & Weld			

10' height - Corner Columns				10' height - Corner Columns				10' height - Corner Columns			
Soil Class 5 - 1500 psf Bearing				Soil Class 4 - 2000 psf Bearing				Soil Class 3 - 3000 psf Bearing			
Dia (A) (in)	Depth (B) (in)	Vertical Rebar Qty	Rebar Size	Dia (A) (in)	Depth (B) (in)	Vertical Rebar Qty	Rebar Size	Dia (A) (in)	Depth (B) (in)	Vertical Rebar Qty	Rebar Size
30	120	8	6	30	102	8	6	30	92	8	6
10' height - Side Columns				10' height - Side Columns				10' height - Side Columns			
Soil Class 5 - 1500 psf Bearing				Soil Class 4 - 2000 psf Bearing				Soil Class 3 - 3000 psf Bearing			
Dia (A) (in)	Depth (B) (in)	Vertical Rebar Qty	Rebar Size	Dia (A) (in)	Depth (B) (in)	Vertical Rebar Qty	Rebar Size	Dia (A) (in)	Depth (B) (in)	Vertical Rebar Qty	Rebar Size
36	136	12	6	36	116	12	6	36	104	12	6
10' Eave - 1500 psf [X]				10' Eave - 2000 psf [ ]				10' Eave - 3000 psf [ ]			

10' height - Corner Columns			
Rebar Dimensions			Weld
X (in)	Y (in)	Rebar Size	Fillet Weld "W"
12	47	8	1/4
10' height - Side Columns			
Rebar Dimensions			Weld
X (in)	Y (in)	Rebar Size	Fillet Weld "W"
12	47	6	1/4
10' height - Side Columns			
Rebar Dimensions			Weld
X (in)	Y (in)	Rebar Size	Fillet Weld "W"
16	59	7	1/4
10' Eave - Rebar & Weld			

12' height - Corner Columns				12' height - Corner Columns				12' height - Corner Columns			
Soil Class 5 - 1500 psf Bearing				Soil Class 4 - 2000 psf Bearing				Soil Class 3 - 3000 psf Bearing			
Dia (A) (in)	Depth (B) (in)	Vertical Rebar Qty	Rebar Size	Dia (A) (in)	Depth (B) (in)	Vertical Rebar Qty	Rebar Size	Dia (A) (in)	Depth (B) (in)	Vertical Rebar Qty	Rebar Size
30	132	8	6	30	112	8	6	30	102	8	6
12' height - Side Columns				12' height - Side Columns				12' height - Side Columns			
Soil Class 5 - 1500 psf Bearing				Soil Class 4 - 2000 psf Bearing				Soil Class 3 - 3000 psf Bearing			
Dia (A) (in)	Depth (B) (in)	Vertical Rebar Qty	Rebar Size	Dia (A) (in)	Depth (B) (in)	Vertical Rebar Qty	Rebar Size	Dia (A) (in)	Depth (B) (in)	Vertical Rebar Qty	Rebar Size
36	140	12	6	36	120	12	6	36	108	12	6
10' Eave - 1500 psf [ ]				10' Eave - 2000 psf [ ]				10' Eave - 3000 psf [ ]			

12' height - Corner Columns			
Rebar Dimensions			Weld
X (in)	Y (in)	Rebar Size	Fillet Weld "W"
16	59	8	5/16
12' height - Side Columns			
Rebar Dimensions			Weld
X (in)	Y (in)	Rebar Size	Fillet Weld "W"
20	59	7	1/4
12' Eave - Rebar & Weld			

SEE DETAILS BP1, BP2 OR BP3 FOR ANCHOR BOLT PATTERNS
BP1 & BP2 ARE (4) BOLT PATTERN WHILE B3 IS A (6) BOLT

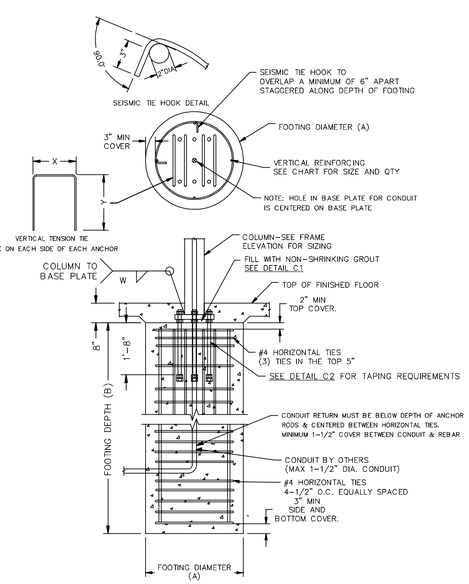

RH30 - SPREAD

8' height - Corner Columns				8' height - Corner Columns				8' height - Corner Columns			
Soil Class 5 - 1500 psf Bearing				Soil Class 4 - 2000 psf Bearing				Soil Class 3 - 3000 psf Bearing			
Size (A) (in)	Depth (in)	T&B Rebar Qty	Rebar Size	Size (A) (in)	Depth (in)	T&B Rebar Qty	Rebar Size	Size (A) (in)	Depth (in)	T&B Rebar Qty	Rebar Size
60	30	8	6	57	30	7	6	57	30	7	6
8' height - Side Columns				8' height - Side Columns				8' height - Side Columns			
Soil Class 5 - 1500 psf Bearing				Soil Class 4 - 2000 psf Bearing				Soil Class 3 - 3000 psf Bearing			
Size (A) (in)	Depth (in)	T&B Rebar Qty	Rebar Size	Size (A) (in)	Depth (in)	T&B Rebar Qty	Rebar Size	Size (A) (in)	Depth (in)	T&B Rebar Qty	Rebar Size
84	30	11	6	81	30	10	6	75	30	10	6
8' Eave - 1500 psf [ ]				8' Eave - 2000 psf [ ]				8' Eave - 3000 psf [ ]			

8' - Corner Columns			
Tie Dimensions			Weld
B (in)	C (in)	Rebar Size	Fillet Weld "W"
16	17.5	5	1/4
8' - Side Columns			
Tie Dimensions			Weld
B (in)	C (in)	Rebar Size	Fillet Weld "W"
16	19.5	5	1/4
8' Eave - Rebar & Weld			

10' height - Corner Columns				10' height - Corner Columns				10' height - Corner Columns			
Soil Class 5 - 1500 psf Bearing				Soil Class 4 - 2000 psf Bearing				Soil Class 3 - 3000 psf Bearing			
Size (A) (in)	Depth (in)	T&B Rebar Qty	Rebar Size	Size (A) (in)	Depth (in)	T&B Rebar Qty	Rebar Size	Size (A) (in)	Depth (in)	T&B Rebar Qty	Rebar Size
66	30	9	6	63	30	8	6	63	30	8	6
10' height - Side Columns				10' height - Side Columns				10' height - Side Columns			
Soil Class 5 - 1500 psf Bearing				Soil Class 4 - 2000 psf Bearing				Soil Class 3 - 3000 psf Bearing			
Size (A) (in)	Depth (in)	T&B Rebar Qty	Rebar Size	Size (A) (in)	Depth (in)	T&B Rebar Qty	Rebar Size	Size (A) (in)	Depth (in)	T&B Rebar Qty	Rebar Size
81	30	10	6	75	30	10	6	75	30	10	6
10' Eave - 1500 psf [ ]				10' Eave - 2000 psf [ ]				10' Eave - 3000 psf [ ]			

8' - Corner Columns			
Tie Dimensions			Weld
B (in)	C (in)	Rebar Size	Fillet Weld "W"
16	17.5	5	1/4
8' - Side Columns			
Tie Dimensions			Weld
B (in)	C (in)	Rebar Size	Fillet Weld "W"
16	19.5	5	1/4
8' Eave - Rebar & Weld			
10' - Corner Columns			
Tie Dimensions			Weld
B (in)	C (in)	Rebar Size	Fillet Weld "W"
16	19.5	5	1/4
10' Eave - Rebar & Weld			

12' height - Corner Columns				12' height - Corner Columns				12' height - Corner Columns			
Soil Class 5 - 1500 psf Bearing				Soil Class 4 - 2000 psf Bearing				Soil Class 3 - 3000 psf Bearing			
Size (A) (in)	Depth (in)	T&B Rebar Qty	Rebar Size	Size (A) (in)	Depth (in)	T&B Rebar Qty	Rebar Size	Size (A) (in)	Depth (in)	T&B Rebar Qty	Rebar Size
78	30	10	6	78	30	10	6	72	30	9	6
12' height - Side Columns				12' height - Side Columns				12' height - Side Columns			
Soil Class 5 - 1500 psf Bearing				Soil Class 4 - 2000 psf Bearing				Soil Class 3 - 3000 psf Bearing			
Size (A) (in)	Depth (in)	T&B Rebar Qty	Rebar Size	Size (A) (in)	Depth (in)	T&B Rebar Qty	Rebar Size	Size (A) (in)	Depth (in)	T&B Rebar Qty	Rebar Size
84	30	11	6	78	30	10	6	78	30	10	6
12' Eave - 1500 psf [ ]				12' Eave - 2000 psf [ ]				12' Eave - 3000 psf [ ]			

8' - Corner Columns			
Tie Dimensions			Weld
B (in)	C (in)	Rebar Size	Fillet Weld "W"
16	17.5	5	1/4
8' - Side Columns			
Tie Dimensions			Weld
B (in)	C (in)	Rebar Size	Fillet Weld "W"
16	19.5	5	1/4
8' Eave - Rebar & Weld			
8' - Corner Columns			
Tie Dimensions			Weld
B (in)	C (in)	Rebar Size	Fillet Weld "W"
16	19.5	5	1/4
10' Side Columns			
Tie Dimensions			Weld
B (in)	C (in)	Rebar Size	Fillet Weld "W"
16	19.5	5	1/4
10' Eave - Rebar & Weld			
12' - Corner Columns			
Tie Dimensions			Weld
B (in)	C (in)	Rebar Size	Fillet Weld "W"
16	19.5	5	5/16
12' - Side Columns			
Tie Dimensions			Weld
B (in)	C (in)	Rebar Size	Fillet Weld
17	21.5	5	1/4
12' Eave - Rebar & Weld			

SEE DETAILS BP1, BP2 OR BP3 FOR ANCHOR BOLT PATTERNS
BP1 & BP2 ARE (4) BOLT PATTERN WHILE B3 IS A (6) BOLT

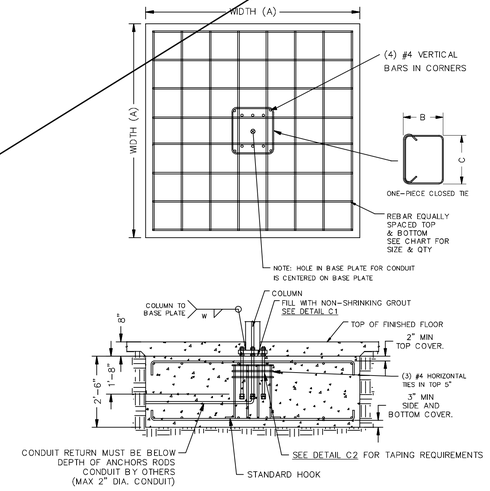

PRE-CHECK (PC) DOCUMENT
Code: 2022 CBC
A separate project application for construction is required.

ICON STD	RH/DSA–PC
DRAWN BY	JD
DATE	7/25/2023
REV	
REV DATE	

JRMA ARCHITECTS ENGINEERS
2700 SATURN ST BREA, CA 92821
T. 714.524.1870 F. 714.524.1875
WWW.JRMA.COM

REGISTERED PROFESSIONAL ENGINEER — DAVID D. ROSS — STRUCTURAL — STATE OF CALIFORNIA
Oct 04, 2023

APPROVED
DIV. OF THE STATE ARCHITECT
APP: 04-122375 PC
REVIEWED FOR
SS ☑ FLS ☑ ACS ☑ CG ☐
DATE: 10/10/2023

30' WIDE RECTANGULAR HIP FOUNDATION PLAN

ICON Shelter Systems Inc
DISTINCTIVE STEEL SHELTERS
WWW.ICONSHELTERS.COM

COPYRIGHT 2004 ICON SHELTER SYSTEMS, INC.

1455 LINCOLN AVE
HOLLAND MI, 49423

616.396.0919
800.748.0983
616.396.0944 FX

LS3.0

AD 1.06

S:\Engineering\Inventor\DSA 2022\PC 2022 RH DSA\30 FOOT\30 WIDE BASE PLATE 1 – DSA 2022 HP.ipt

PRINTED ON :

ALL STRUCTURAL FASTENERS (NUTS, BOLTS, & WASHERS) ON THIS SHEET TO BE HOT DIPPED GALVANIZED

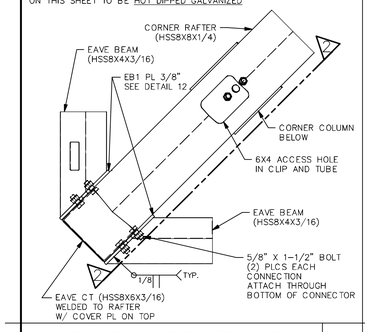

PLAN – EAVE BEAMS & CORNER RAFTER CONNECTIONS @ CORNER COLUMN | 1

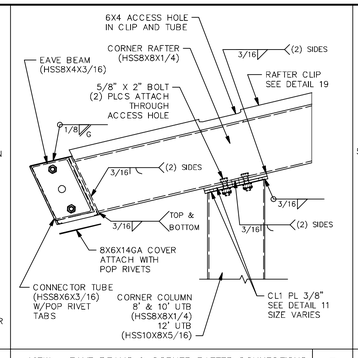

VIEW – EAVE BEAMS & CORNER RAFTER CONNECTIONS @ CORNER COLUMN | 2

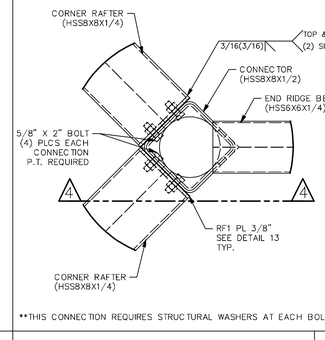

THIS CONNECTION REQUIRES STRUCTURAL WASHERS AT EACH BOLT

PLAN – CORNER RAFTERS CONNECTIONS @ END RIDGE BEAM | 3

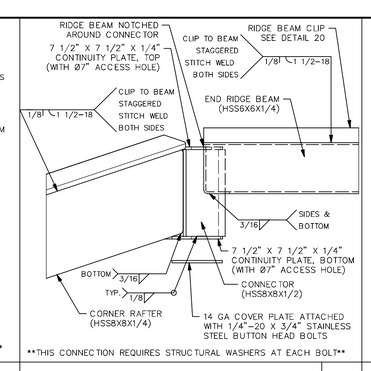

THIS CONNECTION REQUIRES STRUCTURAL WASHERS AT EACH BOLT

VIEW – CORNER RAFTERS CONNECTIONS @ END RIDGE BEAM | 4

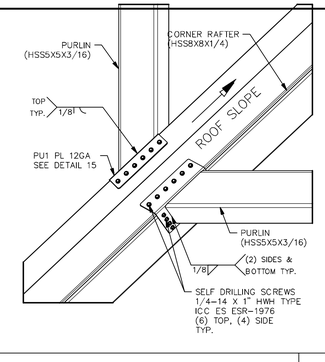

ISOMETRIC – PURLIN CONNECTIONS @ CORNER RAFTER | 5

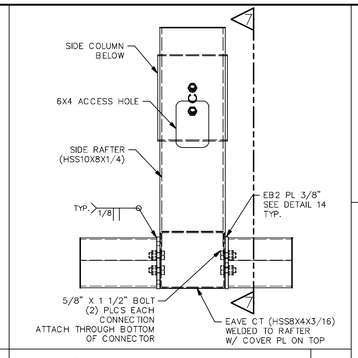

PLAN – EAVE BEAM & SIDE RAFTER CONNECTION @ SIDE COLUMN | 6

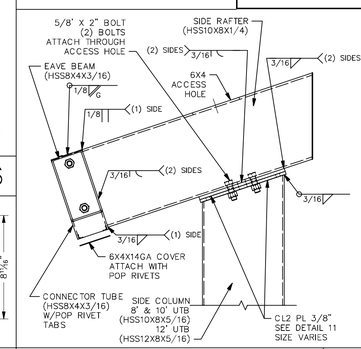

VIEW – EAVE BEAM & SIDE RAFTER CONNECTION @ SIDE COLUMN | 7

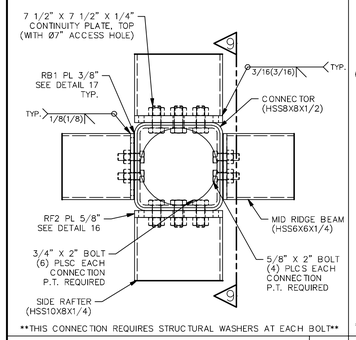

THIS CONNECTION REQUIRES STRUCTURAL WASHERS AT EACH BOLT

PLAN – SIDE RAFTERS & RIDGE BEAM CONNECTIONS @ CONNECTOR | 8

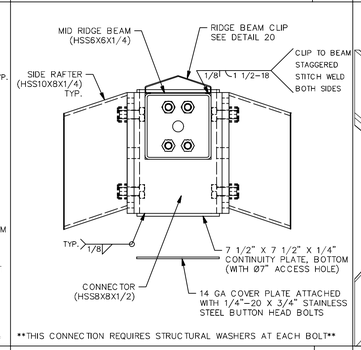

THIS CONNECTION REQUIRES STRUCTURAL WASHERS AT EACH BOLT

VIEW – SIDE RAFTERS & RIDGE BEAM CONNECTIONS @ CONNECTOR | 9

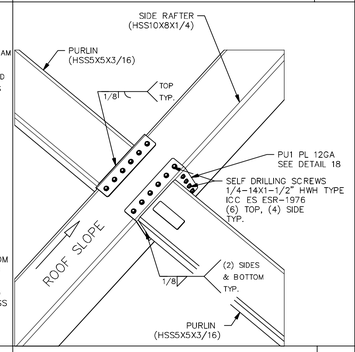

ISOMETRIC – PURLIN CONNECTIONS @ SIDE RAFTER | 10

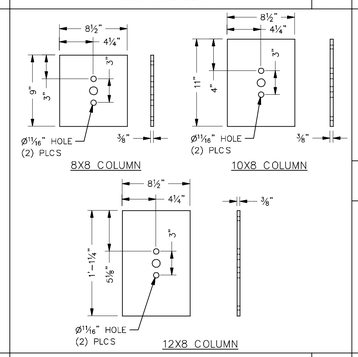

COLUMN TO RAFTER PLATE DETAIL | 11

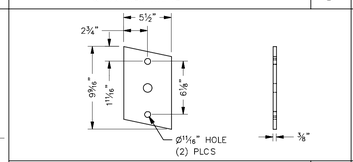

CORNER EAVE BEAM PLATE DETAIL | 12

CORNER PURLIN PLATE DETAIL | 15

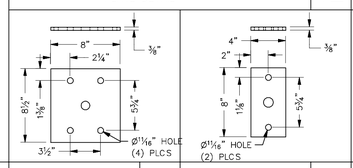

CORNER RAFTER PLATE DETAIL | 13

SIDE EAVE BEAM PLATE DETAIL | 14

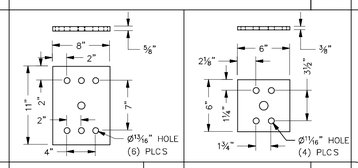

SIDE RAFTER PLATE DETAIL | 16

RIDGE BEAM PLATE DETAIL | 17

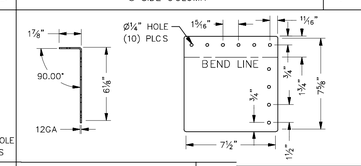

SIDE PURLIN PLATE DETAIL | 18

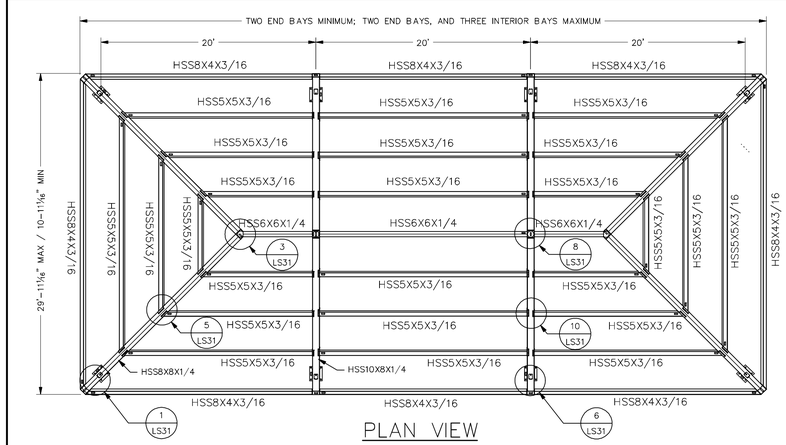

PLAN VIEW

MODEL DESIGNATION	
RH30X44	2 BAY
RH30X64	3 BAY
RH30X84	4 BAY
RH30X104	5 BAY

*NOTE:
QUANTITIES WILL VARY DEPENDING ON SHELTER SIZE ORDERED, PLEASE REFER TO JOB SPECIFIC BILL OF MATERIALS AND INSTALLATION MANUAL.

ITEM	QTY	PART NUMBER	DESCRIPTION	MATERIAL	LENGTH	UNIT WEIGHT
1	4		CORNER COLUMN	**SEE NOTE BELOW		353 lbmass
2	*		SIDE COLUMN	**SEE NOTE BELOW		473 lbmass
3	2		LH SIDE EAVE BEAM	HSS8X4X3/16		311 lbmass
4	2		RH SIDE EAVE BEAM	HSS8X4X3/16		311 lbmass
5	2		END EAVE BEAM	HSS8X4X3/16		422 lbmass
6	*		SIDE EAVE BEAM	HSS8X4X3/16		287 lbmass
7	4		CORNER RAFTER	HSS8X8X1/4		607 lbmass
8	4		SIDE RAFTER	HSS10X8X1/4		473 lbmass
9	2		END RIDGE BEAM	HSS6X6X3/16		149 lbmass
10	*		MID RIDGE BEAM	HSS6X6X3/16		329 lbmass
11	*		CONNECTOR	HSS8X8X1/2		48 lbmass
12	*		LH SIDE PURLIN 1	HSS5X5X3/16		210 lbmass
13	*		RH SIDE PURLIN 1	HSS5X5X3/16		210 lbmass
14	*		END PURLIN 1	HSS5X5X3/16		257 lbmass
15	*		LH SIDE PURLIN 2	HSS5X5X3/16		166 lbmass
16	*		RH SIDE PURLIN 2	HSS5X5X3/16		166 lbmass
17	*		END PURLIN 2	HSS5X5X3/16		169 lbmass
18	*		LH SIDE PURLIN 3	HSS5X5X3/16		122 lbmass
19	*		RH SIDE PURLIN 3	HSS5X5X3/16		122 lbmass
20	*		END PURLIN 3	HSS5X5X3/16		81 lbmass
21	*		MID PURLIN	HSS5X5X3/16		235 lbmass

**NOTE:
MATERIAL WILL VARY DEPENDING ON SHELTER SIZE ORDERED.

☐ CORNER COLUMN 8' UTB – (HSS8X8X1/4)
☐ SIDE COLUMN 8' UTB – (HSS10X8X5/16)

☐ CORNER COLUMN 10' UTB – (HSS8X8X1/4)
☐ SIDE COLUMN 10' UTB – (HSS10X8X5/16)

☐ CORNER COLUMN 12' UTB – (HSS10X8X5/16)
☐ SIDE COLUMN 12' UTB – (HSS12X8X5/16)

**IF MULTI RIB ROOFING IS SELECTED ONLY (4) PURLINS ARE REQUIRED PER BAY (2) PER END

**IF MEGA RIB ROOFING IS SELECTED ONLY (4) PURLINS ARE REQUIRED PER BAY (2) PER END

**IF STANDING SEAM ROOFING IS SELECTED ADDITIONAL PURLINS ARE REQUIRED (6) PURLINS REQUIRED PER BAY (3) PER END

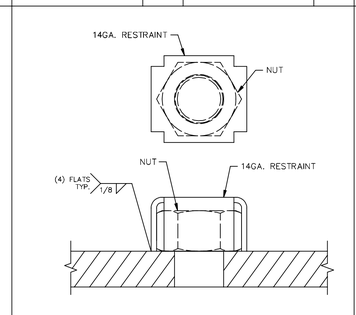

TYPICAL NUT RESTRAINING SYSTEM | NR

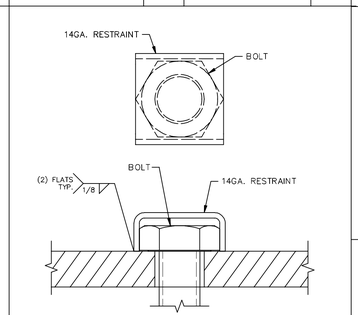

ALL BOLTS ARE ASTM F3125 GR A325 HIGH STRENGTH BOLTS PER SHEET LS1.0

TYPICAL BOLT RESTRAINING SYSTEM | BR

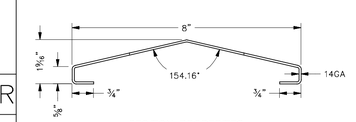

SECTION PROPERTIES
A=0.863 in^2 Fy=36 ksi
Ix=0.197 in^4 Sx=0.286 in^3
Iy=6.579 in^4 Sy=1.645 in^3

CORNER RAFTER CLIP (8" WIDE BEAM) | 19

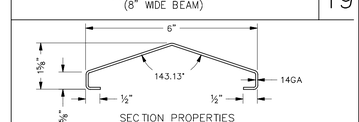

SECTION PROPERTIES
A=0.657 in^2 Fy=36 ksi
Ix=0.087 in^4 Sx=0.03 in^3
Iy=2.92 in^4 Sy=0.97 in^3

RIDGE BEAM CLIP (6" WIDE BEAM) | 20

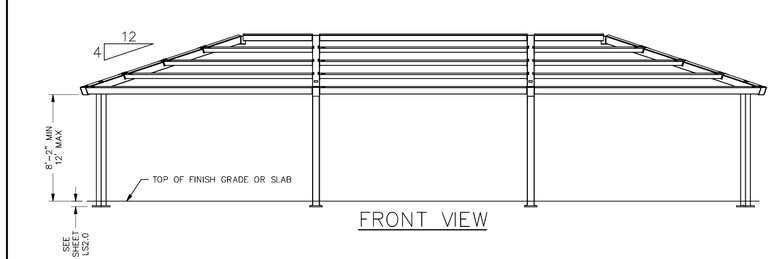

FRONT VIEW

98" MIN IF USED OVER ACCESSIBLE PARKING OR ACCESS AISLES

114" MIN IF LOCATED OVER ACCESSIBLE PASSENGER LOADING ZONES

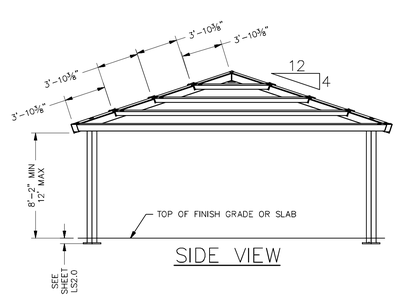

SIDE VIEW

STANDING SEAM FRAMING OPTION SHOWN

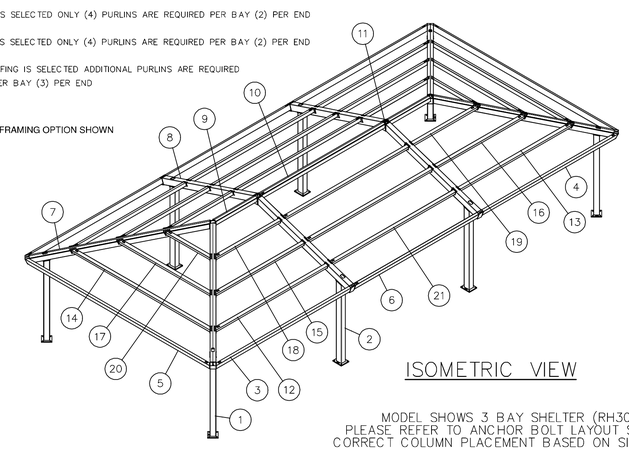

ISOMETRIC VIEW

MODEL SHOWS 3 BAY SHELTER (RH30X64)
PLEASE REFER TO ANCHOR BOLT LAYOUT SHEET FOR CORRECT COLUMN PLACEMENT BASED ON SIZE ORDERED

ICON STD	RH/DSA-PC
DRAWN BY	JD
DATE	7/25/2023
REV	
REV DATE	

JRMA ARCHITECTS ENGINEERS
2700 SATURN ST BREA, CA 92821
T.714.524.1870 F.714.524.1875
WWW.JRMA.COM

REGISTERED PROFESSIONAL ENGINEER JOHN R. DUNCAN STRUCTURAL STATE OF CALIFORNIA
Oct 04, 2023

APPROVED
DIV. OF THE STATE ARCHITECT
APP: 04-122375 PC
REVIEWED FOR
SS ☑ FLS ☑ ACS ☑ CG ☐
DATE: 10/10/2023

30' WIDE RECTANGULAR HIP FRAMING & CONNECTION DETAILS

ICON Shelter Systems Inc
DISTINCTIVE STEEL SHELTERS
WWW.ICONSHELTERS.COM
COPYRIGHT 2004, ICON SHELTER SYSTEMS, INC.

1455 LINCOLN AVE
HOLLAND MI, 49423
616.396.0919
800.748.0983
616.396.0944 FX

PRE-CHECK (PC) DOCUMENT
Code: 2022 CBC
A separate project application for construction is required.

LS3.1
AD 1.07

S:\Engineering\Inventor\DSA 2019\PC 2019 RG DSA\New folder\20 F001\DSA RG40-P4.iam

30' WIDE RECTANGULAR HIP

PRINTED ON :

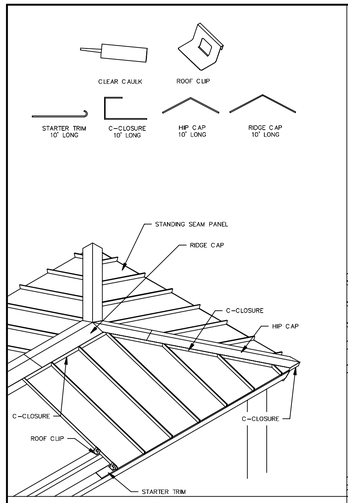

TRIM REFERENCE

THESE DETAILS ASSUME THAT ALL COMPONENTS OF THIS ROOF SYSTEM WILL BE INSTALLED PLUMB AND SQUARE. CAULK AND TRIM SHOULD ALSO BE INSTALLED TO INSURE WATER TIGHTNESS

READ ALL DETAILS IN THIS INSTALLATION MANUAL BEFORE STARTING

S-ST1 STARTER TRIM
S-CP1 ROOF PANEL PREPARATION
S-PI1 FIRST ROOF PANEL
S-PI2 SECOND ROOF PANEL
S-HC1 C-CLOSURE @ HIP
S-RC1 C-CLOSURE @ RIDGE
S-CT1 CORNER TRIM
S-HT1 HIP CAP
S-RT1 RIDGE CAP

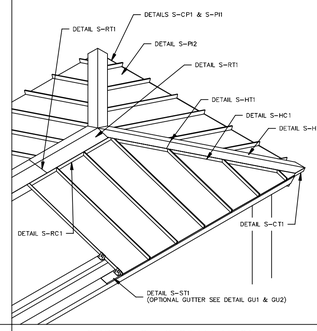

ORDER OF INSTALLATION

INSTALL STARTER TRIM OVERHANGING THE EDGE OF THE EAVE PURLIN 1/2". ATTACH STARTER TRIM WITH 1 1/2" PANCAKE HEAD SCREWS 12" O.C.

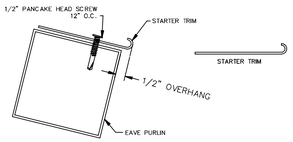

NOTE: SEE DETAILS GU1 AND GU2 IF INSTALLING OPTIONAL GUTTER SYSTEM

STARTER INSTALLATION S-ST1

MEASURE, MARK & CUT THE FIRST ROOF PANEL

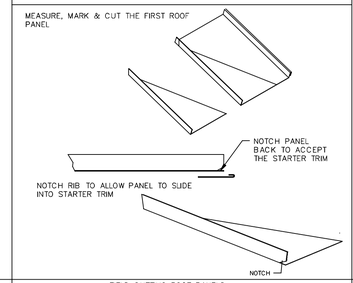

FIELD CUTTING ROOF PANELS S-CP1

AFTER THE ROOF PANEL HAS BEEN CUT TO SIZE (IF NECESSARY) AND NOTCHED, TEST FIT THE PANEL. THEN APPLY A BEAD OF CAULK THE APPROXIMATE LENGTH OF THE PANEL. SLIDE THE PANEL INTO PLACE, AND SQUARE IT UP TO THE ROOF.

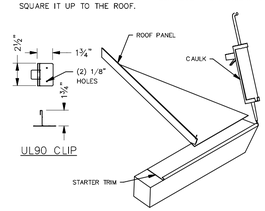

WITH THE ROOF PANEL IN PLACE AND SQUARE, INSTALL THE ROOF CLIPS WITH (2) 1 1/2" PANCAKE HEAD SCREWS.

ROOF CLIPS ARE INSTALLED AT EVERY CROSS MEMBER (EXCEPT RIDGE BEAM)

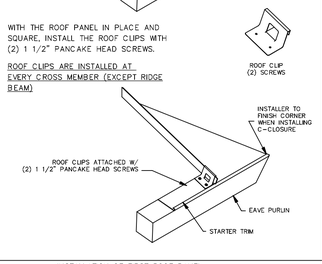

INSTALLATION OF FIRST ROOF PANEL S-PI1

AFTER THE SECOND ROOF PANEL HAS BEEN CUT TO LENGTH (IF NECESSARY) AND NOTCHED, TEST FIT PANEL. THEN APPLY A BEAD OF CAULK INSIDE THE STARTER TRIM. SLIDE THE SECOND ROOF PANEL IN PLACE AND SNAP IT OVER THE BATTEN OF THE FIRST PANEL

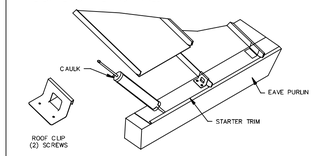

WITH THE SECOND ROOF PANEL IN PLACE AND SQUARE, INSTALL THE ROOF CLIPS WITH (2) 1 1/2" PANCAKE HEAD SCREWS.

REPEAT THIS STEP UNTIL ALL ROOF PANELS ARE INSTALLED

ROOF CLIPS ARE INSTALLED AT EVERY PURLIN

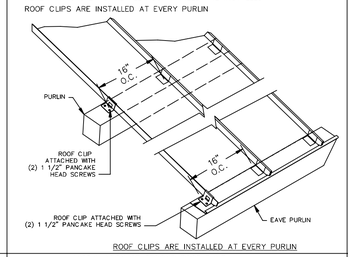

ROOF CLIPS ARE INSTALLED AT EVERY PURLIN

INSTALLATION OF SECOND ROOF PANEL S-PI2

TO INSTALL C-CLOSURES ALONG THE HIP, MARK & CUT THE C-CLOSURE TO LENGTH

APPLY A BEAD OF CAULK TO THE BOTTOM OF THE C-CLOSURE AND FASTEN IT TO THE ROOF WITH (2) 3/4" PAINTED SCREWS ALONG THE RAFTER. THEN APPLY CAULK TO THE END OF THE C-CLOSURE FOR WATER TIGHTNESS

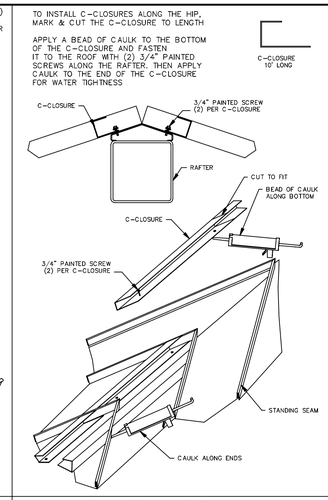

INSTALLATION OF HIP C-CLOSURE S-HC1

TO INSTALL C-CLOSURES ALONG THE RIDGE MEASURE, MARK & CUT THE C-CLOSURE TO LENGTH.

APPLY A 1/4" BEAD OF CAULK TO THE BOTTOM OF THE C-CLOSURE AND FASTEN IT TO THE ROOF WITH (2) 3/4" PAINTED SCREWS (12" O.C. MAX CENTERED ON EACH PANEL) ALONG THE RIDGE BEAM. THEN APPLY CAULK TO THE END OF THE C-CLOSURE FOR WATER TIGHTNESS

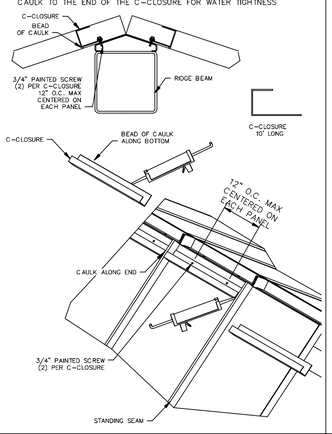

INSTALLATION OF C-CLOSURE @ RIDGE S-RC1

TO FINISH OFF THE END OF THE HIP, MAKE A CORNER CAP BY CUTTING TWO PIECES OF C-CLOSURE TO LENGTH

MEASURE AND CUT A MITER AND CORNER TAB ON (1) PIECE OF C-CLOSURE

CUT AN OPPOSITE MITER ON THE SECOND C-CLOSURE

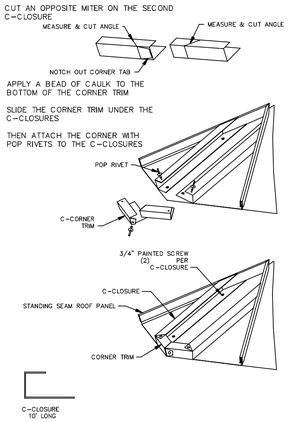

INSTALLATION OF CORNER TRIM S-CT1

TO INSTALL THE HIP CAP, BEVEL THE END OF THE HIP CAP TO MATCH THE ANGLE OF THE ROOF

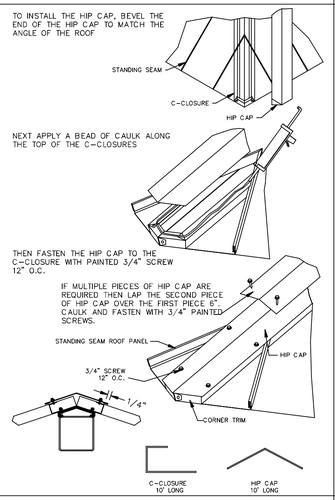

INSTALLATION OF HIP CAP S-HT1

TO INSTALL RIDGE CAP: FIRST APPLY A BEAD OF CAULK ALONG THE TOP OF THE C-CLOSURES

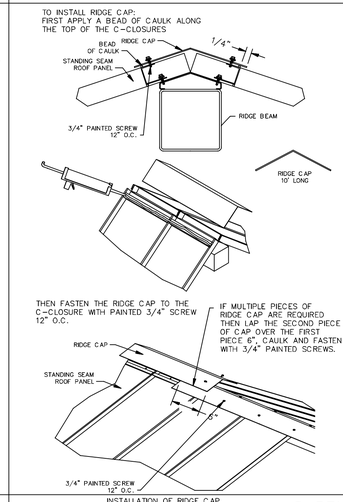

INSTALLATION OF RIDGE CAP S-RT1

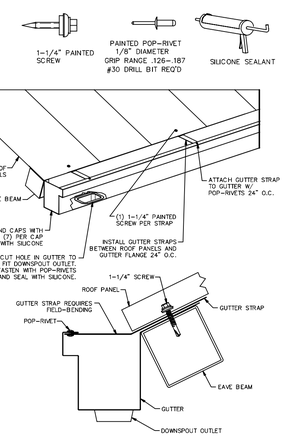

OPTIONAL GUTTER INSTALLATION STANDING SEAM ROOF GU1

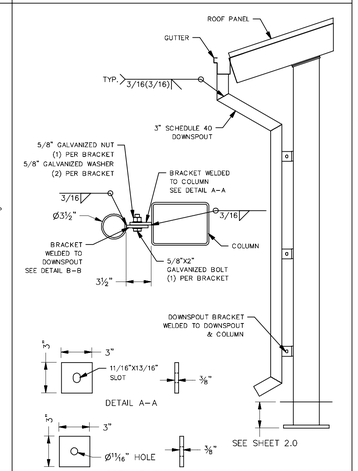

OPTIONAL GUTTER SECTION STANDING SEAM ROOF GU2

ROOF NOTES

ATTENTION INSTALLERS:
METAL SHAVINGS LEFT ON ROOF WILL QUICKLY RUST AND STAIN THE ROOF FINISH!

DRILLING OR INSTALLING ROOF FASTENERS WILL CAUSE METAL SHAVINGS. THESE SHAVINGS MUST BE CAREFULLY REMOVED AT THE END OF EACH DAY BY EITHER SWEEPING OR BRUSHING THE INSTALLED ROOF.

INSTALLED CORRECTLY	INSTALLED TOO TIGHT	INSTALLED TOO LOOSE
THE SEALING MATERIAL SLIGHTLY VISIBLE AROUND THE METAL WASHER	THE SEALING MATERIAL IS DEFORMED BEYOND THE EDGE OF THE METAL WASHER	THE SEALING MATERIAL IS NOT VISIBLE AROUND THE EDGE OF THE METAL WASHER

THE ERECTOR SHOULD THOROUGHLY FAMILIARIZE THEMSELVES WITH ALL INSTALLATION INSTRUCTION MATERIAL BEFORE STARTING WORK.

THE PANELS SHOULD BE INSTALLED PLUMB, STRAIGHT, AND ACCURATELY TO THE ADJACENT WORK.

ERECTORS SHALL BE RESPONSIBLE TO ENSURE THAT THE DETAILS MEET PARTICULAR BUILDING REQUIREMENTS AND TO ASSURE ADEQUATE WATER TIGHTNESS.

FOR THE BEST APPEARANCE ALL TRIM AND FLASHING SHALL BE INSTALLED TRUE, AND IN PROPER ALIGNMENT, WITH ALL EXPOSED FASTENERS EQUALLY SPACED.

SOME FIELD CUTTING AND/OR FITTING OF PANELS, TRIM AND FLASHING IS TO BE EXPECTED BY THE ERECTOR. MINOR FIELD CORRECTIONS ARE PART OF NORMAL ERECTION WORK.

THE INSTALLATION SHALL BE PERFORMED BY EXPERIENCED METAL CRAFTSPERSON AND WORKMANSHIP SHALL MEET THE BEST INDUSTRY STANDARDS.

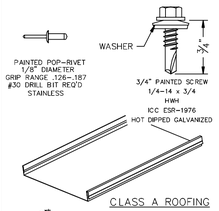

CLASS A ROOFING

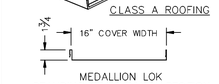

MEDALLION LOK
STANDING SEAM PANEL SECTION
24 ga. Fy = 50 ksi Fu = 65 ksi
ICC ESL-1082

SECTION PROPERTIES
(PER FT. OF WIDTH)

TOP IN COMPRESSION
Ix=0.0898 in^4
Se=0.0565 in^3
Ma=1.4115 in-kips

BOTTOM IN COMPRESSION
Ix=0.039 in^4
Se=0.0476 in^3
Ma=1.0305 in-kips

ICON STD	RH/DSA-PC
DRAWN BY	JD
DATE	7/25/2023
REV	
REV DATE	

JRMA
ARCHITECTS ENGINEERS
2700 SATURN STREET, CA 92821
T.714.524.1870 F. 714.524.1875
WWW.JRMA.COM

REGISTERED PROFESSIONAL ENGINEER
Oct 04, 2023

APPROVED
DIV. OF THE STATE ARCHITECT
APP: 04-122375 PC
REVIEWED FOR
SS ☑ FLS ☑ ACS ☑ CG ☐
DATE: 10/10/2023

30' WIDE RECTANGULAR HIP STANDING SEAM ROOFING

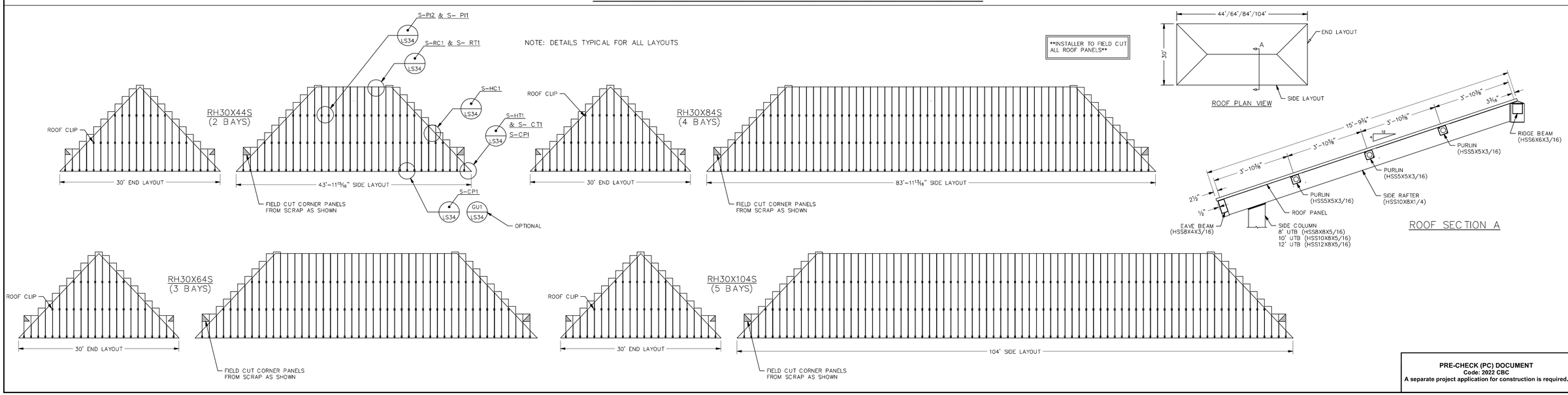

PRE-CHECK (PC) DOCUMENT
Code: 2022 CBC
A separate project application for construction is required.

30' WIDE
RECTANGULAR HIP
STANDING SEAM
ROOFING PLAN

ICON Shelter Systems Inc
DISTINCTIVE STEEL SHELTERS
WWW.ICONSHELTERS.COM

COPYRIGHT 2004, ICON SHELTER SYSTEMS, INC.

1455 LINCOLN AVE
HOLLAND MI, 49423
616.396.0919
800.748.0983
616.396.0944 FX

LS3.4
AD 1.08

S:\Engineering\Inventor\DSA 2019\PC 2019 RH DSA\ROOFS\30 FOOT END SS.dwg

PRINTED ON :