PROJECT MANUAL

BID NUMBER: 109

TAMALPAIS HIGH SCHOOL POOL REPLASTERING PROJECT

TAMALPAIS UNION HIGH SCHOOL DISTRICT

BIDS: March 20, 2026

TABLE OF CONTENTS

Table of Contents
Project Title Page
Table of Contents
List of Drawings
Notice to Bidders
Instructions to Bidders

Bidder Information and Forms

00 41 13	Bid Form and Proposal
00 43 13	Bid Bond
00 43 36	Designated Subcontractors List
00 45 01	Site Visit Certification
00 45 19	Non-Collusion Declaration
00 45 19.01	Iran Contracting Act Certification
00 45 26	Workers' Compensation Certification
00 45 46.01	Prevailing Wage and Related Labor Requirements Certification
00 45 46.02	Disabled Veteran Business Enterprise Participation Certification
00 45 46.03	Drug-Free Workplace Certification
00 45 46.04	Tobacco-Free Environment Certification
00 45 46.05	Drug and Alcohol-Free Schools Certification
00 45 46.06	Workplace Violence Prevention Plan Certification
00 45 46.07	Hazardous Materials Certification
00 45 46.08	Lead-Based Materials Certification
00 45 46.09	Imported Materials Certification
00 45 46.10	Criminal Background Investigation/Fingerprinting Certification
00 45 49	Registered Subcontractors List

Contracting Forms and Supplements

Notice to Award
Agreement for Construction Services (Small Projects)
Exhibit "A" (Scope of Work)
Notice to Proceed

Project Forms

Division 0	Section	Title
	00 61 13.13	Performance Bond
	00 61 13.16	Payment Bond
	00 63 57	Proposed Change Order Form
	00 63 63	Change Order Form
	00 65 19.26	Agreement and Release of Any and All Claims
	00 65 36	Guarantee Form

Conditions of the Contract

Division 0	Section	Title
	00 72 13	General Conditions
	00 73 13	Special Conditions
	00 73 56	Hazardous Materials Procedures and Requirements

General Requirements

Division 1	Section	Title
	01 11 00	Summary of Work

Price and Payment Procedures

Division 1	Section	Title
	01 21 00	Allowance
	01 25 13	Product Options and Substitutions
	01 26 00	Changes in the Work
	01 29 00	Application for Payment and Conditional and Unconditional Waiver and Release Forms

Administrative Requirements

Division 1	Section	Title
	01 33 00	Submittals
	01 35 13.23	Site Standards

Quality Requirements

Division 1	Section	Title
	01 41 00	Regulatory Requirements
	01 42 13	Abbreviations and Acronyms
	01 42 16	Definitions
	01 43 00	Materials and Equipment
	01 45 00	Quality Control

Temporary Facilities and Controls

Division 1	Section	Title
	01 50 00	Temporary Facilities and Controls
	01 50 13	Construction Waste Management and Disposal

Product Requirements

Division 1	Section	Title
	01 64 00	Owner-Furnished Products
	01 66 00	Product Delivery, Storage and Handling

Execution and Closeout Requirements

Division 1	Section	Title
	01 76 00	Alteration Project Procedures
	01 77 00	Contract Closeout and Final Cleaning
	01 78 23	Operation and Maintenance Data
	01 78 36	Warranties
	01 78 39	Record Documents

Division 13 Specifications

Section	Title
13 11 00	Swimming Pool Contractor General Requirements
13 11 09	Swimming Pool Start Up
13 11 10	Swimming Pool Recirculation Equipment
13 11 15	Swimming Pool Deck Equipment
13 11 16	Swimming Pool Underwater Lights
13 11 25	Swimming Pool Cementitious Waterproofing
13 11 40	Swimming Pool Plaster
13 11 45	Swimming Pool Trim Tile

LISTS OF DRAWINGS

List of Drawings

SHEET NUMBER	DESCRIPTION
T0.0	Cover Sheet, Design Data & Sheet Index
D0.0	Swimming Pool Site Demolition Plan
D1.0	Swimming Pool Site Demolition Plan
SP0.0	Swimming Pool Site Plan
SP0.1	Swimming Pool Site Plan Details
SP1.0	Swimming Pool Layout Plan
SP1.1	Swimming Pool Sections
SP1.2	Swimming Pool Finish Details
SP1.3	Swimming Pool Finish Details

9 Sheets Total

DOCUMENT 00 11 16

NOTICE TO BIDDERS

1. Notice is hereby given that the governing board ("Board") of the Tamalpais Union High School District ("District") will receive sealed bids for the following project, **Bid No. 109** ("Project" or "Contract"):

TAMALPAIS HIGH SCHOOL POOL REPLASTERING PROJECT

2. The Project consists of:
Demolition and replacement of plaster and associated finishes of existing Tamalpais High School swimming pool. Associated ADA improvements.

3. To bid on this Project, the Bidder is required to possess one or more of the following State of California contractors' license(s)**: C-53 – Swimming Pool**

   The Bidder's license(s) must remain active and in good standing throughout the term of the Contract.

4. To bid on this Project, the Bidder is required to be registered as a public works contractor with the Department of Industrial Relations pursuant to the Labor Code.

5. Contract Documents will be available on or after February 19, 2026, for review by contacting Brenda Parella, Greystone West at brenda@greystonewest.com for an electronic set of plans; or visiting the District Facilities Planning office at 333 Doherty Drive, Larkspur, California to review a hard copy of the plans; or may be downloaded from the District's website at: https://www.tamdistrict.org/administration/maintenance-operations/rfprfq-bid-information using the "**Notices Inviting Bids**" link.

6. Sealed bids will be received until **2:00 p.m., March 20, 2026**, at the District Facilities Planning Office, 333 Doherty Drive, Larkspur, California 94939, at or after which time the bids will be opened and publicly read aloud. Any bid that is submitted after this time shall be nonresponsive and returned to the bidder. Any claim by a bidder of error in its bid must be made in compliance with section 5109 et seq. of the Public Contract Code.

7. All bids shall be on the form provided by the District. Each bid must conform and be responsive to all pertinent Contract Documents, including, but not limited to, the Instructions to Bidders.

8. A bid bond by an admitted surety insurer on the form provided by the District, a cashier's check or a certified check, drawn to the order of the Tamalpais Union High School District, in the amount of ten percent (10%) of the total bid price shall accompany the Bid Form and Proposal, as a guarantee that the Bidder will, within seven (7) calendar days after the date of the Notice of Award, enter into a contract with the District for the performance of the services as stipulated in the bid.

9. A **mandatory** pre-bid conference and site visit will be held on **Tuesday, February 24, 2026, at 1:00 p.m.** at Tamalpais High School - all interested participants shall meet at the front entrance at 700 Miller Ave., Mill Valley, California.

All participants are required to sign in before the site visit begins, District staff will escort all participants to the pool for the site tour. The site visit is expected to take approximately 30 minutes. Failure to attend or tardiness will render bid ineligible.

10. The successful Bidder shall be required to furnish a 100% Performance Bond and a 100% Payment Bond if it is awarded the Contract for the Work.

11. The successful Bidder may substitute securities for any monies withheld by the District to ensure performance under the Contract, in accordance with the provisions of section 22300 of the Public Contract Code.

12. The successful Bidder will be required to certify that it either meets the Disabled Veteran Business Enterprise ("DVBE") goal of three percent (3%) participation or made a good faith effort to solicit DVBE participation in this Contract if it is awarded the Contract for the Work.

13. The Contractor and all Subcontractors under the Contractor shall pay all workers on all Work performed pursuant to this Contract not less than the general prevailing rate of per diem wages and the general prevailing rate for holiday and overtime work as determined by the Director of the Department of Industrial Relations, State of California, for the type of work performed and the locality in which the work is to be performed within the boundaries of the District, pursuant to section 1770 et seq. of the California Labor Code. Prevailing wage rates are also available from the District or on the Internet at: <http://www.dir.ca.gov>.

14. This Project is subject to labor compliance monitoring and enforcement by the Department of Industrial Relations pursuant to Labor Code section 1771.4 and subject to the requirements of Title 8 of the California Code of Regulations. The successful Bidder shall comply with all requirements of Division 2, Part 7, Chapter 1, Articles 1-5 of the Labor Code.

15. The District shall award the Contract, if it awards it at all, to the lowest responsive responsible bidder based on the **base bid amount only.**

16. The Board reserves the right to reject any and all bids and/or waive any irregularity in any bid received. If the District awards the Contract, the security of unsuccessful bidder(s) shall be returned within sixty (60) days from the time the award is made. Unless otherwise required by law, no bidder may withdraw its bid for ninety (90) days after the date of the bid opening.

END OF DOCUMENT

DOCUMENT 00 21 13
INSTRUCTIONS TO BIDDERS

Bidders shall follow the instructions in this document, and shall submit all documents, forms, and information required for consideration of a bid.

Tamalpais Union High School District ("District") will evaluate information submitted by the apparent low Bidder and, if incomplete or unsatisfactory to District, Bidder's bid may be rejected at the sole discretion of District.

1. Bids are requested for a general construction contract, or work described in general, for the following project ("Project" or "Contract"):

Tamalpais High School Pool Replastering Project

2. A Bidder and its subcontractors must possess the appropriate State of California contractors' license and must maintain the license throughout the duration of the project. Bidders must also be registered as a public works contractor with the Department of Industrial Relations pursuant to the Labor Code. Bids submitted by a contractor who is not properly licensed or registered shall be deemed nonresponsive and will not be considered.

3. The District has prequalified bidders pursuant to Public Contract Code section 20111.5. Only prequalified bidders will be eligible to submit a bid for this Project. Any bid submitted by a bidder who is not prequalified shall be deemed nonresponsive and will not be considered. **N/A**

4. District will receive sealed bids from bidders as stipulated in the Notice to Bidders.

   a. All bids must be sealed in an envelope, marked with the name and address of the Bidder, name of the Project, the Project Number and/or bid number, and time of bid opening.

   b. Bids must be submitted to the District Office by date and time shown in the Notice to Bidders.

   c. Bids must contain all documents as required herein.

5. Bidders are advised that on the date that bids are opened, telephones will not be available at the District Offices for use by bidders or their representatives.

6. Bids will be opened at or after the time indicated for receipt of bids.

7. Bidders must submit bids on the documents titled Bid Form and Proposal and must submit all other required District forms. Bids not submitted on the District's required forms shall be deemed nonresponsive and shall not be considered. Additional sheets required to fully respond to requested information are permissible.

8. Bidders shall not modify the Bid Form and Proposal or qualify their bids. Bidders shall not submit to the District a re-formatted, re-typed, altered, modified, or otherwise recreated version of the Bid Form and Proposal or other District-provided document.

9. Bids shall be clearly written and without erasure or deletions. District reserves the right to reject any bid containing erasures, deletions, or illegible contents.

10. Bidders must supply all information required by each Bid Document. Bids must be full and complete. District reserves the right in its sole discretion to reject any bid as nonresponsive as a result of any error or omission in the bid. Bidders must complete and submit all of the following documents with the Bid Form and Proposal:

    a. Bid Bond on the District's form, or other security.

    b. Designated Subcontractors List.

    c. Site Visit Certification, if a site visit was required.

    d. Non-Collusion Declaration.

    e. Iran Contracting Act Certification, if contract value is $1,000,000 or more.

11. Bidders must submit with their bids a cashier's check or a certified check payable to District, or a bid bond by an admitted surety insurer of not less than ten percent (10%) of amount of Base Bid, plus all additive alternates ("Bid Bond"). If Bidder chooses to provide a Bid Bond as security, Bidder must use the required form of corporate surety provided by District. The Surety on Bidder's Bid Bond must be an insurer admitted in the State of California and authorized to issue surety bonds in the State of California. Bids submitted without necessary bid security will be deemed nonresponsive and will not be considered.

12. If Bidder to whom the Contract is awarded fails or neglects to enter into the Contract and submit required bonds, insurance certificates, and all other required documents, within **TEN (10)** calendar days after the date of the Notice of Award, District may deposit Bid Bond, cashier's check, or certified check for collection, and proceeds thereof may be retained by District as liquidated damages for failure of Bidder to enter into Contract, in the sole discretion of District. It is agreed that calculation of damages District may suffer as a result of Bidder's failure to enter into the Contract would be extremely difficult and impractical to determine and that the amount of the Bidder's required bid security shall be the agreed and conclusively presumed amount of damages.

13. Bidders must submit with the bid the Designated Subcontractors List for those subcontractors who will perform any portion of Work, including labor, rendering of service, or specially fabricating and installing a portion of the Work or improvement according to detailed drawings contained in the plans and specifications, in excess of one half of one percent (0.5%) of total bid. Failure to submit this list when required by law shall result in bid being deemed nonresponsive and the bid will not be considered.

14. All of the listed subcontractors are required to be registered as a public works contractor with the Department of Industrial Relations pursuant to the Labor Code.

    a. An inadvertent error in listing the California contractor license number on the Designated Subcontractors List shall not be grounds for filing a bid protest or grounds for considering the bid nonresponsive if the correct contractor's

license number is submitted to the District within 24 hours after the bid opening and the corrected number corresponds with the submitted name and location for that subcontractor.

b. An inadvertent error listing an unregistered subcontractor shall not be grounds for filing a bid protest or grounds for considering the bid nonresponsive provided that any of the following apply:

(1) The subcontractor is registered prior to the bid opening.

(2) The subcontractor is registered and has paid the penalty registration fee within 24 hours after the bid opening.

(3) The subcontractor is replaced by another registered subcontractor pursuant to Public Contract Code section 4107.

15. If a mandatory pre-bid conference and site visit ("Site Visit") is required as referenced in the Notice to Bidders, then Bidders must submit the Site Visit Certification with their Bid. District will transmit to all prospective Bidders of record such Addenda as District in its discretion considers necessary in response to questions arising at the Site Visit. Oral statements shall not be relied upon and will not be binding or legally effective. Addenda issued by the District as a result of the Site Visit, if any, shall constitute the sole and exclusive record and statement of the results of the Site Visit.

16. Bidders shall submit the Non-Collusion Declaration with their bids. Bids submitted without the Non-Collusion Declaration shall be deemed nonresponsive and will not be considered.

17. The Contractor and all Subcontractors under the Contractor shall pay all workers on all work performed pursuant to the Contract not less than the general prevailing rate of per diem wages and the general prevailing rate for holiday and overtime work as determined by the Director of the Department of Industrial Relations, State of California, for the type of work performed and the locality in which the work is to be performed within the boundaries of the District, pursuant to sections 1770 et seq. of the California Labor Code. Copies of the general prevailing rates of per diem wages for each craft, classification, or type of worker needed to execute the Contract, as determined by Director of the Department of Industrial Relations, are available upon request at the District's principal office. Prevailing wage rates are also available on the internet at http://www.dir.ca.gov.

18. Submission of bid signifies careful examination of Contract Documents and complete understanding of the nature, extent, and location of Work to be performed. Bidders must complete the tasks listed below as a condition to bidding, and submission of a bid shall constitute the Bidder's express representation to District that Bidder has fully completed the following:

a. Bidder has visited the Site, if required, and has examined thoroughly and understood the nature and extent of the Contract Documents, Work, Site, locality, actual conditions, as-built conditions, and all local conditions and federal, state and local laws, and regulations that in any manner may affect cost, progress, performance, or furnishing of Work or that relate to any

aspect of the means, methods, techniques, sequences, or procedures of construction to be employed by Bidder and safety precautions and programs incident thereto;

b. Bidder has conducted or obtained and has understood all examinations, investigations, explorations, tests, reports, and studies that pertain to the subsurface conditions, as-built conditions, underground facilities, and all other physical conditions at or contiguous to the Site or otherwise that may affect the cost, progress, performance, or furnishing of Work, as Bidder considers necessary for the performance or furnishing of Work at the Contract Sum, within the Contract Time, and in accordance with the other terms and conditions of Contract Documents, including specifically the provisions of the General Conditions; and no additional examinations, investigations, explorations, tests, reports, studies, or similar information or data are or will be required by Bidder for such purposes;

c. Bidder has correlated its knowledge and the results of all such observations, examinations, investigations, explorations, tests, reports, and studies with the terms and conditions of the Contract Documents;

d. Bidder has given the District prompt written notice of all conflicts, errors, ambiguities, or discrepancies that it has discovered in or among the Contract Documents and the actual conditions, and the written resolution(s) thereof by the District is/are acceptable to Bidder;

e. Bidder has made a complete disclosure in writing to the District of all facts bearing upon any possible interest, direct or indirect, that Bidder believes any representative of the District or other officer or employee of the District presently has or will have in this Contract or in the performance thereof or in any portion of the profits thereof;

f. Bidder must, prior to bidding, perform the work, investigations, research, and analysis required by this document and that Bidder represented in its Bid Form and Proposal and the Agreement that it performed prior to bidding. Contractor under this Contract is charged with all information and knowledge that a reasonable bidder would ascertain from having performed this required work, investigation, research, and analysis. Bid prices must include entire cost of all work "incidental" to completion of the Work.

g. Conditions Shown on the Contract Documents: Information as to underground conditions, as-built conditions, or other conditions or obstructions, indicated in the Contract Documents, e.g., on Drawings or in Specifications, has been obtained with reasonable care, and has been recorded in good faith. However, District only warrants, and Bidder may only rely, on the accuracy of limited types of information.

(1) As to above-ground conditions or as-built conditions shown or indicated in the Contract Documents, there is no warranty, express or implied, or any representation express or implied, that such information is correctly shown or indicated. This information is verifiable by independent investigation and Bidder is required to make such verification as a condition to bidding. In submitting its Bid,

Bidder shall rely on the results of its own independent investigation. In submitting its Bid, Bidder shall not rely on District-supplied information regarding above-ground conditions or as-built conditions.

(2) As to any subsurface condition shown or indicated in the Contract Documents, Bidder may rely only upon the general accuracy of actual reported depths, actual reported character of materials, actual reported soil types, actual reported water conditions, or actual obstructions shown or indicated. District is not responsible for the completeness of such information for bidding or construction; nor is District responsible in any way for any conclusions or opinions that the Bidder has drawn from such information; nor is the District responsible for subsurface conditions that are not specifically shown (for example, District is not responsible for soil conditions in areas contiguous to areas where a subsurface condition is shown).

h. Conditions Shown in Reports and Drawings Supplied for Informational Purposes: Reference is made to the document entitled Geotechnical Data, and the document entitled Existing Conditions, for identification of:

(1) Subsurface Conditions: Those reports of explorations and tests of subsurface conditions at or contiguous to the Site that have been utilized by Architect in preparing the Contract Documents; and

(2) Physical Conditions: Those drawings of physical conditions in or relating to existing surface or subsurface structures at or contiguous to the Site that has been utilized by Architect in preparing the Contract Documents.

(3) These reports and drawings are **not** Contract Documents and, except for any "technical" data regarding subsurface conditions specifically identified in Geotechnical Data and Existing Conditions, and underground facilities data, Bidder may not in any manner rely on the information in these reports and drawings. Subject to the foregoing, Bidder must make its own independent investigation of all conditions affecting the Work and must not rely on information provided by District.

19. Bids shall be based on products and systems specified in Contract Documents or listed by name in Addenda. Whenever in the Specifications any materials, process, or article is indicated or specified by grade, patent, or proprietary name, or by name of manufacturer, that Specification shall be deemed to be followed by the words "or equal." Bidder may, unless otherwise stated, offer any material, process, or article that shall be substantially equal or better in every respect to that so indicated or specified. The District is not responsible and/or liable in any way for a Contractor's damages and/or claims related, in any way, to that Contractor's basing its bid on any requested substitution that the District has not approved in advance and in writing. Contractors and materials suppliers who submit requests for substitutions prior to the award of the Contract must do so in writing and in compliance with Public Contract Code section 3400. All requests must comply with the following:

a. District must receive any notice of request for substitution of a specified item

a minimum of **TEN (10)** calendar days prior to bid opening. The Successful Bidder will not be allowed to substitute specified items unless properly noticed.

b. Within 35 days after the date of the Notice of Award, the Successful Bidder shall submit data substantiating the request(s) for all substitution(s) containing sufficient information to assess acceptability of product or system and impact on Project, including, without limitation, the requirements specified in the Special Conditions and the Specifications. Insufficient information shall be grounds for rejection of substitution.

c. Approved substitutions, if any, shall be listed in Addenda. District reserves the right not to act upon submittals of substitutions until after bid opening.

d. Substitutions may be requested after Contract has been awarded only if indicated in and in accordance with requirements specified in the Special Conditions and the Specifications.

20. Bidders may examine any available "as-built" drawings of previous work by giving District reasonable advance notice. District will not be responsible for accuracy of "as-built" drawings. The document entitled Existing Conditions applies to all supplied "as-built" drawings.

21. All questions about the meaning or intent of the Contract Documents are to be directed via email to Greystone West, Jason Cave, jason@greystonewest.com and Brenda Parella, brenda@greystonewest.com and cc the District to Mike Woolard, mwoolard@tamdistrict.org. Interpretations or clarifications considered necessary by the District in response to such questions will be issued in writing by Addenda and emailed or delivered to all parties recorded by the District as having received the Contract Documents or posted on the District's website at https://www.tamdistrict.org/administration/maintenance-operations/rfprfq-bidinformation. Questions received less than **SEVEN (7)** calendar days prior to the date for opening bids may not be answered. Only questions answered by formal written Addenda will be binding. Oral and other interpretations or clarifications will be without legal effect.

22. Addenda may also be issued to modify other parts of the Contract Documents as deemed advisable by the District.

23. Each Bidder must acknowledge each Addendum in its Bid Form and Proposal by number or its Bid shall be considered non-responsive. Each Addendum shall be part of the Contract Documents. A complete listing of Addenda may be secured from the District.

24. This Contract may include alternates. Alternates are defined as alternate products, materials, equipment, systems, methods, or major elements of the construction that may, at the District's option and under terms established in the Contract and pursuant to section 20103.8 of the Public Contract Code, be selected for the Work.

25. The District shall award the Contract, if it awards it at all, to the lowest responsive responsible bidder based on the criteria as indicated in the Notice to Bidders. In the event two or more responsible bidders submit identical bids, the District shall select the Bidder to whom to award the Contract by lot.

26. Discrepancies between written words and figures, or words and numerals, will be resolved in favor of figures or numerals.

27. Bidders in contention for contract awards shall be required to attend a Post-Bid interview, which will be set within three (3) calendar days following bid opening. A duly authorized representative of the apparent low bidder is required to attend the Post Bid Interview, in person. The apparent low bidder's authorized representative(s) must have (1) knowledge of how the bid submitted was prepared, (2) the person responsible for supervising performance of the Work, and (3) the authority to bind the apparent low bidder. Failure to attend the Post Bid Interview as scheduled will be considered just cause for the District to reject the Bid as nonresponsive.

28. Any bid protest by any Bidder regarding any other bid must be submitted in writing to the District, before 5:00 p.m. of the **THIRD (3rd)** business day following bid opening.

    a. Only a Bidder who has actually submitted a bid, and who could be awarded the Contract if the bid protest is upheld, is eligible to submit a bid protest. Subcontractors are not eligible to submit bid protests. A Bidder may not rely on the bid protest submitted by another Bidder.

    b. A bid protest must contain a complete statement of any and all bases for the protest and all supporting documentation. Materials submitted after the bid protest deadline will not be considered.

    c. The protest must refer to the specific portions of all documents that form the basis for the protest.

        (1) Without limitation to any other basis for protest, an inadvertent error in listing the California contractor's license number on the Designated Subcontractors List shall not be grounds for filing a bid protest or grounds for considering the bid nonresponsive if the correct contractor's license number is submitted to the District within 24 hours after the bid opening and the corrected number corresponds with the submitted name and location for that subcontractor.

        (2) Without limitation to any other basis for protest, an inadvertent error listing an unregistered subcontractor shall not be grounds for filing a bid protest or grounds for considering the bid nonresponsive provided that any of the following apply:

            (i) The subcontractor is registered prior to the bid opening.

            (ii) The subcontractor is registered and has paid the penalty registration fee within 24 hours after the bid opening.

            (iii) The subcontractor is replaced by another registered subcontractor pursuant to Public Contract Code section 4107.

    d. The protest must include the name, address and telephone number of the person representing the protesting party.

e. The party filing the protest must concurrently transmit a copy of the protest and any attached documentation to all other parties with a direct financial interest that may be adversely affected by the outcome of the protest. Such parties shall include all other bidders or proposers who appear to have a reasonable prospect of receiving an award depending upon the outcome of the protest.

f. The procedure and time limits set forth in this paragraph are mandatory and are each bidder's sole and exclusive remedy in the event of bid protest. Failure to comply with these procedures shall constitute a waiver of any right to further pursue the bid protest, including filing a Government Code Claim or legal proceedings.

29. The Bidder to whom Contract is awarded shall execute and submit the following documents by 5:00 p.m. of the **TENTH (10th)** calendar day following the date of the Notice of Award. Failure to properly and timely submit these documents entitles District to reject the bid as nonresponsive.

a. Agreement: To be executed by successful Bidder. District may require Contractor to submit up to three (3) copies, each bearing an original signature.

b. Performance Bond (100%): On the form provided in the Contract Documents and fully executed as indicated on the form.

c. Payment Bond (Contractor's Labor and Material Bond) (100%): On the form provided in the Contract Documents and fully executed as indicated on the form.

d. Insurance Certificates and Endorsements as required.

e. Workers' Compensation Certification.

f. Prevailing Wage and Related Labor Requirements Certification.

g. Disabled Veteran Business Enterprise Participation Certification.

h. Drug-Free Workplace Certification.

i. Tobacco-Free Environment Certification.

j. Drug and Alcohol-Free Schools Certification.

k. Workplace Violence Prevention Plan Certification.

l. Hazardous Materials Certification.

m. Lead-Based Materials Certification.

n. Imported Materials Certification.

o. Criminal Background Investigation/Fingerprinting Certification.

p. Registered Subcontractors List: Must include Department of Industrial Relations (DIR) registration number of each subcontractor for all tiers.

30. Time for Completion: District may issue a Notice to Proceed within **NINETY (90)** days from the date of the Notice of Award. Once Contractor has received the Notice to Proceed, Contractor shall complete the Work within the period of time indicated in the Contract Documents.

a. In the event that the District desires to postpone issuing the Notice to Proceed beyond this 90-day period, it is expressly understood that with reasonable notice to the Contractor, the District may postpone issuing the Notice to Proceed.

b. It is further expressly understood by Contractor that Contractor shall not be entitled to any claim of additional compensation as a result of the postponement of the issuance of the Notice to Proceed beyond a 90-day period. If the Contractor believes that a postponement of issuance of the Notice to Proceed will cause a hardship to the Contractor, the Contractor may terminate the Contract. Contractor's termination due to a postponement beyond this 90-day period shall be by written notice to District within **TEN (10)** calendar days after receipt by Contractor of District's notice of postponement.

c. It is further understood by the Contractor that in the event that Contractor terminates the Contract as a result of postponement by the District, the District shall only be obligated to pay Contractor for the Work that Contractor had performed at the time of notification of postponement and which the District had in writing authorized Contractor to perform prior to issuing a Notice to Proceed.

d. Should the Contractor terminate the Contract as a result of a notice of postponement, District shall have the authority to award the Contract to the next lowest responsive responsible bidder.

31. District reserves the right to reject any or all bids, including without limitation the right to reject any or all nonconforming, nonresponsive, unbalanced, or conditional bids, to re-bid, and to reject the bid of any bidder if District believes that it would not be in the best interest of the District to make an award to that bidder, whether because the bid is not responsive or the bidder is unqualified or of doubtful financial ability or fails to meet any other pertinent standard or criteria established by District. District also reserves the right to waive any inconsequential deviations or irregularities in any bid. For purposes of this paragraph, an "unbalanced bid" is one having nominal prices for some work items and/or enhanced prices for other work items.

32. It is the policy of the District that no qualified person shall be excluded from participating in, be denied the benefits of, or otherwise be subjected to discrimination in any consideration leading to the award of contract, based on race, religious creed, color, national origin, ancestry, physical disability, mental disability, reproductive health decision-making, medical condition, genetic information, marital status, sex, gender, gender identity, gender expression, age, sexual orientation, or veteran or military status. The Successful Bidder and its subcontractors shall comply with applicable federal and state laws, including, but not limited to the California Fair Employment and Housing Act, beginning with Government Code section 12900, and Labor Code section 1735.

33. Prior to the award of Contract, District reserves the right to consider the responsibility of the Bidder. District may conduct investigations as District deems necessary to assist in the evaluation of any bid and to establish the responsibility, including, without limitation, qualifications and financial ability of Bidders, proposed subcontractors, suppliers, and other persons and organizations to perform and furnish the Work in accordance with the Contract Documents to District's satisfaction within the prescribed time.

END OF DOCUMENT

DOCUMENT 00 21 13.1

BIDDER INFORMATION AND FORMS

[INTENTIONALLY LEFT BLANK UNLESS PROVIDED IN SPECIAL CONDITIONS – SEPARATE PREQUALIFICATION PROCESS RECOMMENDED]

END OF DOCUMENT

DOCUMENT 00 41 13

BID FORM AND PROPOSAL

To: Governing Board of the Tamalpais Union High School District ("District" or "Owner")

From: _____

(Proper Name of Bidder)

The undersigned declares that Bidder has read and understands the Contract Documents, including, without limitation, the Notice to Bidders and the Instructions to Bidders, and agrees and proposes to furnish all necessary labor, materials, and equipment to perform and furnish all work in accordance with the terms and conditions of the Contract Documents, including, without limitation, the Drawings and Specifications of **Bid No. 109**, for the following project known as:

Tamalpais High School Pool Replastering Project

("Project" or "Contract") and will accept in full payment for that Work the following total
lump sum amount, all taxes included:

_____dollars $ _____

BASE BID

Bidder acknowledges and agrees that the Base Bid accounts for any and all Allowance(s).

Additive/Deductive Alternates:

_____dollars $ _____

Alternate 1 – Lane Line Storage Reel *(Reference Section 13 11 15.2.4.C)*

_____dollars $ _____

Alternate 2 – Floating Water Polo Course *(Reference Section 13 11 15.2.5)*

Descriptions of alternates are primarily scope definitions and do not necessarily detail the full range of materials and processes needed to complete the construction.

Unit Prices. The Bidder's Base Bid includes the following unit prices, which the Bidder must provide and the District may, at its discretion, utilize in valuing additive and/or deductive change orders (Unit Prices shall include all labor, materials, services, profit, overhead, insurance, bonds, taxes, and all other incidental costs of Contractor, subcontractors, and suppliers): **N/A**

Allowance. The Bidder's Base Bid **shall** include the following Allowances for the Tasks/Work as noted here:

Task/Work	Allowance Value
Fifty Thousand Dollars Allowance: Allowance for unforeseen conditions.	$50,000.00

The Allowance Value for an Allowance Item includes the direct cost of labor, materials, equipment, transportation, taxes and insurance associated with the applicable Allowance Item. All other costs, including Contractor's overall project management and general conditions costs, overhead and fee, are deemed to be included in the Base Bid.

The District shall have sole discretion to authorize all expenditures from the Allowances. The District shall process expenditures from the Allowances in the form of an Allowance Expenditure Directive ("AED"). Any unused Allowance or unused portion thereof shall be deducted from the Contract Price to the benefit of the District.

1. The undersigned has reviewed the Work outlined in the Contract Documents and fully understands the scope of Work required in this Proposal, understands the construction and project management function(s) is described in the Contract Documents, and that each Bidder who is awarded a contract shall be in fact a prime contractor, not a subcontractor, to the District, and agrees that its Proposal, if accepted by the District, will be the basis for the Bidder to enter into a contract with the District in accordance with the intent of the Contract Documents.

2. The undersigned has notified the District in writing of any discrepancies or omissions or of any doubt, questions, or ambiguities about the meaning of any of the Contract Documents and has contacted the Construction Manager before bid date to verify the issuance of any clarifying Addenda.

3. The undersigned agrees to commence work under this Contract on the date established in the Contract Documents and to complete all work within the time specified in the Contract Documents.

4. The liquidated damages clause of the General Conditions and Agreement is hereby acknowledged.

5. It is understood that the District reserves the right to reject this bid and that the bid shall remain open to acceptance and is irrevocable for a period of ninety (90) days.

6. The following documents are attached hereto:

- Bid Bond on the District's form or other security
- Designated Subcontractors List
- Site Visit Certification
- Non-Collusion Declaration
- Iran Contracting Act Certification

7. Receipt and acceptance of the following Addenda is hereby acknowledged:

No. _____, Dated _____	No. _____, Dated _____
No. _____, Dated _____	No. _____, Dated _____
No. _____, Dated _____	No. _____, Dated _____

8. Bidder acknowledges that the license required for performance of the Work is a **C53** license.

9. Bidder hereby certifies that Bidder is able to furnish labor that can work in harmony with all other elements of labor employed or to be employed on the Work.

10. Bidder specifically acknowledges and understands that if it is awarded the Contract, that it shall perform the Work of the Project while complying with all requirements of the Department of Industrial Relations.

11. Bidder hereby certifies that its bid includes sufficient funds to permit Bidder to comply with all local, state or federal labor laws or regulations during the Project, including payment of prevailing wage, and that Bidder will comply with the provisions of Labor Code section 2810(d) if awarded the Contract.

12. Bidder represents that it is competent, knowledgeable, and has special skills with respect to the nature, extent, and inherent conditions of the Work to be performed. Bidder further acknowledges that there are certain peculiar and inherent conditions existent in the construction of the Work that may create, during the Work, unusual or peculiar unsafe conditions hazardous to persons and property.

13. Bidder expressly acknowledges that it is aware of such peculiar risks and that it has the skill and experience to foresee and to adopt protective measures to adequately and safely perform the Work with respect to such hazards.

14. Bidder expressly acknowledges that it is aware that if a false claim is knowingly submitted (as the terms "claim" and "knowingly" are defined in the California False Claims Act, Gov. Code, § 12650 et seq.), the

District will be entitled to civil remedies set forth in the California False Claim Act. It may also be considered fraud and the Contractor may be subject to criminal prosecution.

15. The undersigned Bidder certifies that it is, at the time of bidding, and shall be throughout the period of the Contract, licensed by the State of California to do the type of work required under the terms of the Contract Documents and registered as a public works contractor with the Department of Industrial Relations. Bidder further certifies that it is regularly engaged in the general class and type of work called for in the Contract Documents.

[SIGNATURE ON FOLLOWING PAGE]

Bidder hereby certifies to the District that all representations, certifications, and statements made by Bidder, as set forth in this bid form, are true and correct and are made under penalty of perjury.

Dated this _____day of 2026

Name of Bidder: _____

Type of Organization: _____

Signature: _____

Print Name: _____

Title: _____

Address of Bidder: _____

Taxpayer Identification No. of Bidder: _____

Telephone Number: _____

Fax Number: _____

E-mail: _____ Web Page: _____

Contractor's License No(s):

No.: _____Class: _____Expiration Date: _____

No.: _____Class:_____Expiration Date: _____

No.: _____Class:_____Expiration Date: _____

Public Works Contractor Registration No.: _____

END OF DOCUMENT

DOCUMENT 00 43 13

BID BOND

(Note: If Bidder is providing a bid bond as its bid security, Bidder must use this form, NOT a surety company form.)

KNOW ALL PERSONS BY THESE PRESENTS:
That the undersigned,_____, as Principal ("Principal"),

and _____, as Surety ("Surety"), a corporation organized and existing under and by virtue of the laws of the State of California and authorized to do business as a surety in the State of California, are held and firmly bound unto the Tamalpais Union High School District ("District") of Marin County, State of California, as Obligee, in an amount equal to **ten percent (10%) of the Base Bid** plus alternates, for the payment of which sum well and truly to be made, we, and each of us, bind ourselves, our heirs, executors, administrators, successors, and assigns, jointly and severally, firmly by these presents.

THE CONDITION OF THIS OBLIGATION IS SUCH that whereas the Principal has submitted a bid to the District for all Work specifically described in the accompanying bid for the following project: **Tamalpais High School Pool Replastering Project** ("Project" or "Contract").
NOW, THEREFORE, if the Principal is awarded the Contract and, within the time and manner required under the Contract Documents, after the prescribed forms are presented to Principal for signature, enters into a written contract, in the prescribed form in accordance with the bid, and files two bonds, one guaranteeing faithful performance and the other guaranteeing payment for labor and materials as required by law, and meets all other conditions to the Contract between the Principal and the Obligee becoming effective, or if the Principal shall fully reimburse and save harmless the Obligee from any damage sustained by the Obligee through failure of the Principal to enter into the written contract and to file the required performance and labor and material bonds, and to meet all other conditions to the Contract between the Principal and the Obligee becoming effective, then this obligation shall be null and void; otherwise, it shall be and remain in full force and effect. The full payment of the sum stated above shall be due immediately if Principal fails to execute the Contract within ten (10) days of the date of the District's Notice of Award to Principal.

Surety, for value received, hereby stipulates and agrees that no change, extension of time, alteration or addition to the terms of the Contract or the call for bids, or to the work to be performed thereunder, or the specifications accompanying the same, shall in any way affect its obligation under this bond, and it does hereby waive notice of any such change, extension of time, alteration or addition to the terms of the Contract or the call for bids, or to the work, or to the specifications.

In the event suit is brought upon this bond by the Obligee and judgment is recovered, the Surety shall pay all costs incurred by the Obligee in such suit, including a reasonable attorneys' fee to be fixed by the Court.

If the District awards the bid, the security of unsuccessful bidder(s) shall be returned within sixty (60) days from the time the award is made. Unless otherwise required by law, no bidder may withdraw its bid for ninety (90) days after the date of the bid opening.
IN WITNESS WHEREOF, this instrument has been duty executed by the Principal and Surety above named, on the _____day of _____, 2026.

_____
Principal

_____
By

_____
Surety

_____
By

_____
Name of California Agent of Surety

_____
Address of California Agent of Surety

_____
Telephone Number of California Agent of Surety

Bidder must attach Power of Attorney and Certificate of Authority for Surety and a Notarial Acknowledgment for all Surety's signatures. The California Department of Insurance must authorize the Surety to be an admitted Surety Insurer.

END OF DOCUMENT

DOCUMENT 00 43 36

DESIGNATED SUBCONTRACTORS LIST

(Public Contact Code Sections 4109-4114)

PROJECT: **Tamalpais High School Pool Replastering Project**

Bidder acknowledges and agrees that it must clearly set forth below the name, location and California contractor license number of each subcontractor who will perform work or labor or render service to the Bidder in or about the construction of the Work or who will specially fabricate and install a portion of the Work according to detailed drawings contained in the plans and specifications in an amount in excess of one-half of one percent (0.5%) of Bidder's total Base Bid and the kind of Work that each will perform. Vendors or suppliers of materials only do not need to be listed.

Bidder acknowledges and agrees that, if Bidder fails to list as to any portion of Work, or if Bidder lists more than one subcontractor to perform the same portion of Work, Bidder must perform that portion itself or be subjected to penalty under applicable law. In case more than one subcontractor is named for the same kind of Work, state the portion of the kind of Work that each subcontractor will perform.

If alternate bid(s) is/are called for and Bidder intends to use subcontractors different from or in addition to those subcontractors listed for work under the Base Bid, Bidder must list subcontractors that will perform Work in an amount in excess of one half of one percent (0.5%) of Bidder's total Base Bid plus alternate(s).
If further space is required for the list of proposed subcontractors, attach additional copies of page 2 showing the required information, as indicated below.

Subcontractor Name: _____

CA Cont. Lic. #: _____ Location: _____

DIR Registration #: _____

Portion of Work: _____

Subcontractor Name: _____

CA Cont. Lic. #: _____ Location: _____

DIR Registration #: _____

Portion of Work: _____

Subcontractor Name: _____

CA Cont. Lic. #: _____ Location: _____
DIR Registration #: _____

Portion of Work: _____

Subcontractor Name: _____

CA Cont. Lic. #: _____ Location: _____

DIR Registration #: _____

Portion of Work: _____

Subcontractor Name: _____

CA Cont. Lic. #: _____ Location: _____

DIR Registration #: _____

Portion of Work: _____

Subcontractor Name: _____

CA Cont. Lic. #: _____ Location: _____

DIR Registration #: _____

Portion of Work: _____

(Provide additional sheets as needed to document all Subcontractors used on project).

Date: _____

Proper Name of Bidder: _____

Signature: _____

Print Name: _____

Title: _____

END OF DOCUMENT

DOCUMENT 00 45 01

SITE VISIT/JOB WALK CERTIFICATION

TO BE EXECUTED BY BIDDER AND SUBMITTED WITH BID
(ONLY IF SITE VISIT/JOB WALK WAS MANDATORY)

PROJECT: Tamalpais High School Pool Replastering Project

Check option that applies:

_____ I certify that I visited the Site of the proposed Work, received the attached _____ pages of information, and became fully acquainted with the conditions relating to construction and labor. I fully understand the facilities, difficulties, and restrictions attending the execution of the Work under contract.

_____ I certify that _____(Bidder's representative) visited the Site of the proposed Work, received the attached _____pages of information, and became fully acquainted with the conditions relating to construction and labor. The Bidder's representative fully understood the facilities, difficulties, and restrictions attending the execution of the Work under contract.

Bidder fully indemnifies the Tamalpais Union High School District, its Architect, its Engineers, its Construction Manager, and all of their respective officers, agents, employees, and consultants from any damage, or omissions, related to conditions that could have been identified during my visit and/or the Bidder's representative's visit to the Site.

I certify under penalty of perjury under the laws of the State of California that the foregoing is true and correct.

Date: _____

Proper Name of Bidder: _____

Signature: _____

Print Name: _____

Title: _____

ATTACHMENTS:

1.

2.

3.

END OF DOCUMENT

DOCUMENT 00 45 19
NON-COLLUSION DECLARATION
(Public Contract Code Section 7106)

The undersigned declares:

I am the _____of _____, the party making the foregoing bid.
[Title] [Name of Firm]

The bid is not made in the interest of, or on behalf of, any undisclosed person, partnership, company, association, organization, or corporation. The bid is genuine and not collusive or sham. The bidder has not directly or indirectly induced or solicited any other bidder to put in a false or sham bid. The bidder has not directly or indirectly colluded, conspired, connived, or agreed with any bidder or anyone else to put in a sham bid, or to refrain from bidding. The bidder has not in any manner, directly or indirectly, sought by agreement, communication, or conference with anyone to fix the bid price of the bidder or any other bidder, or to fix any overhead, profit, or cost element of the bid price, or of that of any other bidder. All statements contained in the bid are true. The bidder has not, directly or indirectly, submitted his or her bid price or any breakdown thereof, or the contents thereof, or divulged information or data relative thereto, to any corporation, partnership, company, association, organization, bid depository, or to any member or agent thereof, to effectuate a collusive or sham bid, and has not paid, and will not pay, any person or entity for such purpose.

Any person executing this declaration on behalf of a bidder that is a corporation, partnership, joint venture, limited liability company, limited liability partnership, or any other entity, hereby represents that he or she has full power to execute, and does execute, this declaration on behalf of the bidder.

I declare under penalty of perjury under the laws of the State of California that the foregoing is true and correct and that this declaration is executed on _____,
[Date]

at _____, _____.
[City] [State]

Date: _____

Proper Name of Bidder: _____

Signature: _____

Print Name: _____

Title: _____

END OF DOCUMENT

DOCUMENT 00 45 19.01

IRAN CONTRACTING ACT CERTIFICATION

(Public Contract Code Sections 2202-2208)

BID NO.: 109 between the Tamalpais Union High School District ("District") and _____ _____ ("Contractor" or "Bidder") ("Contract" or "Project").

Prior to bidding on or submitting a proposal for a contract for goods or services of $1,000,000 or more, the bidder/proposer must submit this certification pursuant to Public Contract Code section 2204.

The bidder/proposer must complete **ONLY ONE** of the following two options. To complete OPTION 1, check the corresponding box **and** complete the certification below. To complete OPTION 2, check the corresponding box, complete the certification below, and attach documentation demonstrating the exemption approval.

☐ **OPTION 1.** Bidder/Proposer is not on the current list of persons engaged in investment activities in Iran created by the California Department of General Services ("DGS") pursuant to Public Contract Code section 2203(b), and we are not a financial institution extending twenty million dollars ($20,000,000) or more in credit to another person, for 45 days or more, if that other person will use the credit to provide goods or services in the energy sector in Iran and is identified on the current list of persons engaged in investment activities in Iran created by DGS.

☐ **OPTION 2.** Bidder/Proposer has received a written exemption from the certification requirement pursuant to Public Contract Code sections 2203(c) and (d). *A copy of the written documentation demonstrating the exemption approval is included with our bid/proposal.*

CERTIFICATION:

I, the official named below, CERTIFY UNDER PENALTY OF PERJURY, that I am duly authorized to legally bind the bidder/proposer to the OPTION selected above. This certification is made under the laws of the State of California.

Vendor Name/Financial Institution (Printed)	*Federal ID Number (or n/a)*
By (Authorized Signature)	
Printed Name and Title of Person Signing	*Date Executed*

END OF DOCUMENT

DOCUMENT 00 45 26

WORKERS' COMPENSATION CERTIFICATION

BID NO.: 109 between the Tamalpais Union High School District ("District") and _____ _____ ("Contractor" or "Bidder") ("Contract" or "Project").

Labor Code section 3700, in relevant part, provides:

Every employer except the State shall secure the payment of compensation in one or more of the following ways:

a. By being insured against liability to pay compensation by one or more insurers duly authorized to write compensation insurance in this state; and/or

b. By securing from the Director of Industrial Relations a certificate of consent to self-insure, which may be given upon furnishing proof satisfactory to the Director of Industrial Relations of ability to self-insure and to pay any compensation that may become due to his employees.

I am aware of the provisions of section 3700 of the Labor Code which require every employer to be insured against liability for workers' compensation or to undertake self- insurance in accordance with the provisions of that code, and I will comply with such provisions before commencing the performance of the Work of this Contract.

Date: _____

Proper Name of Contractor: _____

Signature: _____

Print Name: _____

Title: _____

(In accordance with Labor Code sections 1860 and 1861, the above certificate must be signed and filed with the awarding body prior to performing any Work under this Contract.)

END OF DOCUMENT

DOCUMENT 00 45 46.01

PREVAILING WAGE AND

RELATED LABOR REQUIREMENTS CERTIFICATION

BID NO.: 109 between the Tamalpais Union High School District ("District") and _____ _____ ("Contractor" or "Bidder") ("Contract" or "Project").

I hereby certify that I will conform to the State of California Public Works Contract requirements regarding prevailing wages, benefits, on-site audits with 48-hours' notice, payroll records, and apprentice and trainee employment requirements, for all Work on the above Project including, without limitation, labor compliance monitoring and enforcement by the Department of Industrial Relations.

Date: _____

Proper Name of Contractor: _____

Signature: _____

Print Name: _____

Title: _____

END OF DOCUMENT

DOCUMENT 00 45 46.02

DISABLED VETERAN BUSINESS ENTERPRISE PARTICIPATION CERTIFICATION

BID NO.: 109 between the Tamalpais Union High School District ("District") and _____ _____ ("Contractor" or "Bidder") ("Contract" or "Project").

GENERAL INSTRUCTIONS

Section 17076.11 of the Education Code requires school districts using, or planning to use, funds allocated pursuant to the State of California School Facility Program ("Program") for the construction and/or modernization of school buildings to have a participation goal for disabled veteran business enterprises ("DVBE") of at least three percent (3%) per year of the overall dollar amount expended each year by the school district on projects that receive state funding. Therefore, the lowest responsive responsible Bidder awarded the Contract must submit this document to the District with its executed Agreement, identifying the steps contractor took to solicit DVBE participation in conjunction with this Contract. **Do not submit this form with your bids.**

PART I – Method of Compliance with DVBE Participation Goals. Check the appropriate box to indicate your method of committing the contract dollar amount.

YOUR BUSINESS ENTERPRISE IS:	**AND YOU WILL**	**AND YOU WILL**
A. ☐ Disabled veteran owned and your forces will perform at least 3% of this Contract	Include a copy of your DVBE letter from Office of Small Business and Disabled Veterans Business Enterprise Services ("OSDS")*	Complete Part 1 of this form and the Certification
B. ☐ Disabled veteran owned but is unable to perform 3% of this Contract with your forces	Use DVBE subcontractors /suppliers to bring the Contract participation to at least 3%	Include a copy of each DVBE's letter from OSDS (including yours, if applicable), and complete Part 1 of this form and the Certification
C. ☐ **NOT** disabled veteran owned	Use DVBE subcontractors /suppliers for at least 3% of this Contract	
D. ☐ Unable to meet the required participation goals after good faith efforts	Make good faith efforts, including contacts, advertisement and DVBE solicitation	Complete all of this form and the Certification

* A DVBE letter from OSDS is obtained from the participating DVBE.

You must complete the following table to show the dollar amount of DVBE participation:

	TOTAL CONTRACT PRICE
A. Prime Bidder, if DVBE (own participation)	$
B. DVBE Subcontractor or Supplier	
1.	
2.	
3.	
4.	
C. Subtotal (A & B)	
D. Non-DVBE	
E. Total Bid	

PART II – Contacts. To identify DVBE subcontractors/suppliers for participation in your contract, you must contact each of the following categories. You should contact several DVBE organizations.

CATEGORY	**TELEPHONE NUMBER**	**DATE CONTACTED**	**PERSON CONTACTED**
1. The District, if any			*
2. OSDS, provides assistance locating DVBEs at https://caleprocure.ca.gov/pages/PublicSearch/supplier-search.aspx	(916) 375-4940		*
3. DVBE Organization (List)			*

*Write "recorded message" in this column, if applicable.

PART III – Advertisement. You must advertise for DVBE participation in both a trade and focus paper. List the advertisement you place to solicit DVBE participation. Advertisements should be published at least fourteen (14) days prior to bid/proposal opening; if you cannot advertise fourteen (14) days prior, advertisements should be published as soon as possible. Advertisements must include that your firm is seeking DVBE participation, the project name and location, and your firm's name, your contact person, and telephone number. Attach copies of advertisements to this form.

FOCUS/TRADE PAPER NAME	**CHECK ONE**		**DATE OF ADVERTISEMENT**
	TRADE	**FOCUS**	

PART IV – DVBE Solicitations. List DVBE subcontractors/suppliers that were invited to bid. Use the following instructions to complete the remainder of this section (read the three columns as a sentence from left to right). If you need additional space to list DVBE solicitations, please use a separate page and attach to this form.

IF THE DVBE…..	**THEN…..**	**AND…..**
was selected to participate	Check "YES" in the "SELECTED" column	include a copy of their DVBE letter(s) from OSDS
was **NOT** selected to participate	Check "NO" in the "SELECTED" column	state why in the "REASON NOT SELECTED" column
did not respond to your solicitation	Check the "NO RESPONSE" column.	

DVBE CONTACTED	**SELECTED**		**REASON NOT SELECTED**	**NO RESPONSE**
	YES	**NO**		

A copy of this form must be retained by you and may be subject to a future audit.

CERTIFICATION

I, _____, certify that I am the bidder's _____ and that I have made a diligent effort to ascertain the facts with regard to the representations made herein. In making this certification, I am aware of section 12650 et seq. of the Government Code providing for the imposition of treble damages for making false claims.

Date: _____

Proper Name of Contractor: _____

Signature: _____

Print Name: _____

Title: _____

END OF DOCUMENT

DOCUMENT 00 45 46.03

DRUG-FREE WORKPLACE CERTIFICATION

BID NO.: 109 between the Tamalpais Union High School District ("District") and _____ _____ ("Contractor" or "Bidder") ("Contract" or "Project").

This Drug-Free Workplace Certification form is required from the successful Bidder pursuant to Government Code section 8350 et seq., the Drug-Free Workplace Act of 1990. The Drug-Free Workplace Act of 1990 requires that every person or organization awarded a contract or grant for the procurement of any property or service from any state agency must certify that it will provide a drug-free workplace by doing certain specified acts. In addition, the Act provides that each contract or grant awarded by a state agency may be subject to suspension of payments or termination of the contract or grant, and the contractor or grantee may be subject to debarment from future contracting, if the contracting agency determines that specified acts have occurred.

The District is not a "state agency" as defined in the applicable section(s) of the Government Code, but the District is a local agency and public school district under California law and requires all contractors on District projects to comply with the provisions and requirements of the Drug-Free Workplace Act of 1990.
Contractor must also comply with the provisions of Health & Safety Code section 11362.3 which prohibits the consumption or possession of cannabis or cannabis products in any public place, including school grounds, and specifically on school grounds while children are present.
Contractor shall certify that it will provide a drug-free workplace by doing all of the following:

a. Publishing a statement notifying employees that the unlawful manufacture, distribution, dispensation, possession, or use of a controlled substance is prohibited in the person's or organization's workplace and specifying actions which will be taken against employees for violations of the prohibition.

b. Establishing a drug-free awareness program to inform employees about all of the following:

   (1) The dangers of drug abuse in the workplace.

   (2) The person's or organization's policy of maintaining a drug-free workplace.

   (3) The availability of drug counseling, rehabilitation, and employee-assistance programs.

   (4) The penalties that may be imposed upon employees for drug abuse violations.

c. Requiring that each employee engaged in the performance of the contract or grant be given a copy of the statement required above, and that, as a condition of employment on the contract or grant, the employee agrees to abide by the terms of the statement.

I, the undersigned, agree to fulfill the terms and requirements of Government Code section 8355 listed above and will publish a statement notifying employees concerning (a) the prohibition of controlled substance at the workplace, (b) establishing a drug-free awareness program, and (c) requiring that each employee engaged in the performance of the Contract be given a copy of the statement required by section 8355(a), and requiring that the employee agree to abide by the terms of that statement.

I also understand that if the District determines that I have either (a) made a false certification herein, or (b) violated this certification by failing to carry out the requirements of section 8355, that the Contract awarded herein is subject to termination, suspension of payments, or both. I further understand that, should I violate the terms of the Drug-Free Workplace Act of 1990, I may be subject to debarment in accordance with the requirements of the aforementioned Act.

I acknowledge that I am aware of the provisions of and hereby certify that I will adhere to the requirements of the Drug-Free Workplace Act of 1990 and Health and Safety Code section 11362.3.

Date: _____

Proper Name of Contractor: _____

Signature: _____

Print Name: _____

Title: _____

END OF DOCUMENT

DOCUMENT 00 45 46.04

TOBACCO-FREE ENVIRONMENT CERTIFICATION

BID NO.: 109 between the Tamalpais Union High School District ("District") and _____ _____ ("Contractor" or "Bidder") ("Contract" or "Project").

This Tobacco-Free Environment Certification form is required from the successful Bidder.

Pursuant to, without limitation, 20 U.S.C. section 6083, Labor Code section 6400 et seq., Health & Safety Code section 104350 et seq., Business and Professions Code section 22950 et seq., and District Board policies, all District sites, including the Project site, are tobacco-free environments. Smoking and the use of tobacco products by all persons is prohibited on or in District property. District property includes school buildings, school grounds, school-owned vehicles and vehicles owned by others while on District property. The prohibition on smoking includes the use of any electronic smoking device that creates an aerosol or vapor, in any manner or in any form, and the use of any oral smoking device for the purpose of circumventing the prohibition of tobacco smoking. Further, Health & Safety Code section 11362.3 prohibits the smoking or use of cannabis or cannabis products in any place where smoking tobacco is prohibited.

I acknowledge that I am aware of the District's policy regarding tobacco-free environments at District sites, including the Project site and hereby certify that I will adhere to the requirements of that policy and not permit any of my firm's employees, agents, subcontractors, or my firm's subcontractors' employees or agents, to use tobacco and/or smoke on the Project site.

Date: _____

Proper Name of Contractor: _____

Signature: _____

Print Name: _____

Title: _____

END OF DOCUMENT

DOCUMENT 00 45 46.05

DRUG AND ALCOHOL-FREE SCHOOLS CERTIFICATION

BID NO.: 109 between the Tamalpais Union High School District ("District") and _____ _____ ("Contractor" or "Bidder") ("Contract" or "Project").

Pursuant to, without limitation, District Board policies, all District sites, including the Project site, are drug and alcohol-free schools. Possession, use, or dale of drugs and alcohol is prohibited at any time in district-owned or leased buildings, on district property, and in district vehicles unless otherwise permitted by law.

I acknowledge that I am aware of the District's policy regarding drug and alcohol-free schools, including the Project site and hereby certify that I will adhere to the requirements of that policy and not permit any of my firm's employees, agents, subcontractors, or my firm's subcontractors' employees or agents, to possess, use or sell:

1. Any substance which may not lawfully be possessed, used, or sold in California.

2. Cannabis or cannabis products (Health and Safety Code, § 11362.3; 21 USC §§ 812, 844).

3. Alcohol beverages, unless approved by the Superintendent or designee for limited purposes specified in Business and Professions Code section 25608.

Date: _____

Proper Name of Contractor: _____

Signature: _____

Print Name: _____

Title: _____

END OF DOCUMENT

DOCUMENT 00 45 46.06
WORKPLACE VIOLENCE PREVENTION PLAN CERTIFICATION

BID NO.: 109 between the Tamalpais Union High School District ("District") and _____

_____

_____

_____ ("Contractor" or "Bidder") ("Contract" or "Project").

California Labor Code section 6401.9 requires covered employers to adopt a comprehensive workplace violence prevention plan, which shall be in writing and shall be available and easily accessible to the District's employees. To the extent that it may apply to Contractor's employees, the District's Workplace Violence Prevention Plan ("Prevention Plan") can be found here: https://simbli.eboardsolutions.com/Meetings/Attachment.aspx?S=36030468&AID=842333&MID=31098 or is available at the District Office.

In light of Section 6401.9 of the California Labor Code, Contractor certifies that Contractor has ascertained that the personnel (including the entity's employees and Subcontractors) providing site services on the District's Project have (1) received comprehensive Prevention Plan training and (2) access to the Prevention Plan.

Contractor understands that the Project site will need to comply with the Prevention Plan requirements for its employees and Subcontractors. Personnel who have not received comprehensive Prevention Plan training and do not have access to the Prevention Plan or decline to state if they received such training and have access to the Prevention Plan will be treated as not receiving comprehensive Prevention Plan Training and not having access to the Prevention Plan.

Contractor agrees to compensate the District for any civil penalties and expenses (including attorney's fees) it accrues pursuant to the California Labor Code, including but not limited to, California Labor Code section 6401.9(g), for any California Labor Code violations stemming from Contractor's Project work.

I acknowledge that I am aware of the provisions of and hereby certify that I will adhere to the requirements of the California Labor Code section 6401.9.

Date: _____

Proper Name of Contractor: _____

Signature: _____

_____

Print Name:

Title: _____

END OF SECTION

DOCUMENT 00 45 46.07

HAZARDOUS MATERIALS CERTIFICATION

BID NO.: 109 between Tamalpais Union High School District ("District") and _____ _____ ("Contractor" or "Bidder") ("Contract" or "Project").

1. Contractor hereby certifies that no asbestos, or asbestos-containing materials, polychlorinated biphenyl (PCB), or any material listed by the federal or state Environmental Protection Agency or federal or state health agencies as a hazardous material, or any other material defined as being hazardous under federal or state laws, rules, or regulations, ("New Hazardous Material"), shall be furnished, installed, or incorporated in any way into the Project or in any tools, devices, clothing, or equipment used to affect any portion of Contractor's work on the Project for District.

2. Contractor further certifies that it has instructed its employees with respect to the above-mentioned standards, hazards, risks, and liabilities.

3. Asbestos and/or asbestos-containing material shall be defined as all items containing but not limited to chrysotile, crocidolite, amosite, anthophyllite, tremolite, and actinolite. Any or all material containing greater than one-tenth of one percent (0.1%) asbestos shall be defined as asbestos-containing material.

4. Any disputes involving the question of whether or not material is New Hazardous Material shall be settled by electron microscopy or other appropriate and recognized testing procedure, at the District's determination. The costs of any such tests shall be paid by Contractor if the material is found to be New Hazardous Material.

5. All Work or materials found to be New Hazardous Material or Work or material installed with equipment containing New Hazardous Material will be immediately rejected and this Work will be removed at Contractor's expense at no additional cost to the District.

6. Contractor has read and understood the document titled, "Hazardous Materials Procedures & Requirements" and shall comply with all the provisions outlined therein.

7. Contractor certifies that it is knowledgeable of, and shall comply with, all laws applicable to the Work including, but not limited to, all federal, state, and local laws, statutes, standards, rules, regulations, and ordinances applicable to the Work.

Date: _____

Proper Name of Contractor: _____

Signature: _____

Print Name: _____

Title: _____

END OF DOCUMENT

DOCUMENT 00 45 46.08
LEAD-BASED MATERIALS CERTIFICATION

BID NO.: 109 between the Tamalpais Union High School District ("District") and _____ _____ ("Contractor" or "Bidder") ("Contract" or "Project").

This certification provides notice to the Contractor that:

(1) Contractor's work may disturb lead-containing building materials.

(2) Contractor shall notify the District if any work may result in the disturbance of lead-containing building materials.

(3) Contractor shall comply with the Renovation, Repair and Painting Rule, if lead-based paint is disturbed in a six-square-foot or greater area indoors or a 20-square-foot or greater area outdoors.

1. Lead as a Health Hazard

Lead poisoning is recognized as a serious environmental health hazard facing children today. Even at low levels of exposure, much lower than previously believed, lead can impair the development of a child's central nervous system, causing learning disabilities, and leading to serious behavioral problems. Lead enters the environment as tiny lead particles and lead dust disburses when paint chips, chalks, peels, wears away over time, or is otherwise disturbed. Ingestion of lead dust is the most common pathway of childhood poisoning; lead dust gets on a child's hands and toys and then into a child's mouth through common hand-to-mouth activity.
Exposures may result from construction or remodeling activities that disturb lead paint, from ordinary wear and tear of windows and doors, or from friction on other surfaces.

Ordinary construction and renovation or repainting activities carried out without lead-safe work practices can disturb lead-based paint and create significant hazards. Improper removal practices, such as dry scraping, sanding, or water blasting painted surfaces, are likely to generate high volumes of lead dust.
Because the Contractor and its employees will be providing services for the District, and because the Contractor's work may disturb lead-containing building materials, CONTRACTOR IS HEREBY NOTIFIED of the potential presence of lead-containing materials located within certain buildings utilized by the District. All school buildings built prior to 1978 are presumed to contain some lead-based paint until sampling proves otherwise.

2. Overview of California Law

Education Code section 32240 et seq. is known as the Lead-Safe Schools Protection Act. Under this act, the Department of Health Services is to conduct a sample survey of schools in the State of California for the purpose of developing risk factors to predict lead contamination in public schools. (Ed. Code, § 32241.)

Any school that undertakes any action to abate existing risk factors for lead is required to utilize trained and state-certified contractors, inspectors, and workers. (Ed. Code, § 32243, subd. (b).) Moreover, lead-based paint, lead plumbing, and solders, or other potential sources of lead contamination, shall not be utilized in the construction of any new school facility or the modernization or renovation of any existing school facility. (Ed. Code, § 32244.)
Both the Federal Occupational Safety and Health Administration ("Fed/OSHA") and the California Division of Occupational Safety and Health ("Cal/OSHA") have implemented safety orders applicable to all construction work where a contractor's employee may be occupationally exposed to lead.

The OSHA Regulations apply to all construction work where a contractor's employee may be occupationally exposed to lead. The OSHA Regulations contain specific and detailed requirements imposed on contractors subject to those regulations. The OSHA Regulations define construction work as work for construction, alteration, and/or repair, including painting and decorating. Regulated work includes, but is not limited to, the following:

a. Demolition or salvage of structures where lead or materials containing lead are present;

b. Removal or encapsulation of materials containing lead;

c. New construction, alteration, repair, or renovation of structures, substrates, or portions thereof, that contain lead, or materials containing lead;

d. Installation of products containing lead;

e. Lead contamination/emergency cleanup;

f. Transportation, disposal, storage, or containment of lead or materials containing lead on the site or location at which construction activities are performed; and

g. Maintenance operations associated with the construction activities described in the subsection.

Because it is assumed by the District that all painted surfaces (interior as well as exterior) within the District contain some level of lead, it is imperative that the Contractor, its workers and subcontractors fully and adequately comply with all applicable laws, rules and regulations governing lead-based materials (including title 8, California Code of Regulations, section 1532.1).

Contractor shall notify the District if any Work may result in the disturbance of lead-containing building materials. Any and all Work that may result in the disturbance of lead-containing building materials shall be coordinated through the District. A signed copy of this Certification shall be on file prior to beginning Work on the Project, along with all current insurance certificates.

3. <u>Renovation, Repair and Painting Rule, Section 402(c)(3) of the Toxic Substances Control Act</u>

The EPA requires lead safe work practices to reduce exposure to lead hazards created by renovation, repair and painting activities that disturb lead-based paint. Pursuant to the Renovation, Repair and Painting Rule (RRP), renovations in homes, childcare facilities, and schools built prior to 1978 must be conducted by certified renovations firms, using renovators with training by a EPA-accredited training provider, and fully and adequately complying with all applicable laws, rules and regulations governing lead-based materials, including those rules and regulations appearing within title 40 of the Code of Federal Regulations as part 745 (40 CFR 745).

The RRP requirements apply to all contractors who disturb lead-based paint in a six- square-foot or greater area indoors or a 20-square-foot or greater area outdoors. If a DPH-certified inspector or risk assessor determines that a home constructed before 1978 is lead-free, the federal certification is not required for anyone working on that particular building.

4. Contractor's Liability

If the Contractor fails to comply with any applicable laws, rules, or regulations, and that failure results in a site or worker contamination, the Contractor will be held solely responsible for all costs involved in any required corrective actions, and shall defend, indemnify, and hold harmless the District, pursuant to the indemnification provisions of the Contract, for all damages and other claims arising therefrom.

If lead disturbance is anticipated in the Work, only persons with appropriate accreditation, registrations, licenses, and training shall conduct this Work.

It shall be the responsibility of the Contractor to properly dispose of any and all waste products, including, but not limited to, paint chips, any collected residue, or any other visual material that may occur from the prepping of any painted surface. It will be the responsibility of the Contractor to provide the proper disposal of any hazardous waste by a certified hazardous waste hauler. This company shall be registered with the Department of Transportation (DOT) and shall be able to issue a current manifest number upon transporting any hazardous material from any school site within the District.

The Contractor shall provide the District with any sample results prior to beginning Work, during the Work, and after the completion of the Work. The District may request to examine, prior to the commencement of the Work, the lead training records of each employee of the Contractor.

THE CONTRACTOR HEREBY ACKNOWLEDGES, UNDER PENALTY OF PERJURY, THAT IT:

1. <u>HAS RECEIVED NOTIFICATION OF POTENTIAL LEAD-BASED MATERIALS ON THE OWNER'S PROPERTY;</u>

2. <u>IS KNOWLEDGEABLE REGARDING AND WILL COMPLY WITH ALL APPLICABLE LAWS, RULES, AND REGULATIONS GOVERNING WORK WITH, AND DISPOSAL, OF LEAD.</u>

THE UNDERSIGNED WARRANTS THAT HE/SHE HAS THE AUTHORITY TO SIGN ON BEHALF OF AND BIND THE CONTRACTOR. THE DISTRICT MAY REQUIRE PROOF OF SUCH AUTHORITY.

Date: _____

Proper Name of Contractor: _____

Signature: _____

Print Name: _____

Title: _____

END OF DOCUMENT

DOCUMENT 00 45 46.09

IMPORTED MATERIALS CERTIFICATION

BID NO.: 109 between the Tamalpais Union High School District ("District") and _____ _____ ("Contractor" or "Bidder") ("Contract" or "Project").

This form shall be executed by all entities that, in any way, provide or deliver and/or supply any soils, aggregate, or related materials ("Fill") to the Project Site and shall be provided to the District at least ten (10) days before delivery. All Fill shall satisfy all requirements of any environmental review of the Project performed pursuant to the statutes and guidelines of the California Environmental Quality Act, section 21090 et seq. of the Public Resources Code ("CEQA"), and all requirements of section 17210 et seq. of the Education Code, including requirements for a Phase I environmental assessment acceptable to the State of California Department of Education and Department of Toxic Substances Control.

Certification of: □ Delivery Firm/Transporter □ Supplier □ Manufacturer
□ Wholesaler □ Broker □ Retailer
□ Distributor □ Other _____

Type of Entity □ Corporation □ General Partnership
□ Limited Partnership □ Limited Liability Company
□ Sole Proprietorship □ Other _____

Name of firm ("Firm"): _____

Mailing address: _____

Addresses of branch office used for this Project: _____

If subsidiary, name and address of parent company: _____

_____

By my signature below, I hereby certify that I am aware of section 25260 of the Health and Safety Code and the sections referenced therein regarding the definition of hazardous material. I further certify on behalf of the Firm that all soils, aggregates, or related materials provided, delivered, and/or supplied or that will be provided, delivered, and/or supplied by this Firm to the Project Site are free of any and all hazardous material as defined in section 25260 of the Health and Safety Code. I further certify that I am authorized to make this certification on behalf of the Firm.

Date: _____

Proper Name of Firm: _____

Signature: _____

Print Name: _____

Title: _____ END OF DOCUMENT

DOCUMENT 00 45 46.10

CRIMINAL BACKGROUND INVESTIGATION/
FINGERPRINTING CERTIFICATION

BID NO.: 109 between the Tamalpais Union High School District ("District") and _____ _____ ("Contractor" or "Bidder") ("Contract" or "Project").

The undersigned does hereby certify to the District that I am a representative of the Contractor currently under contract with the District; that I am familiar with the facts herein certified; and that I am authorized and qualified to execute this certificate on behalf of Contractor.
Contractor certifies that it has taken at least one of the following actions (check all that apply):

☐ Pursuant to Education Code section 45125.2(a), Contractor has installed or will install, prior to commencement of Work, a physical barrier at the Work Site, that will limit contact between Contractor's employees, Subcontractors or suppliers and District pupils at all times; and/or

☐ Pursuant to Education Code section 45125.2(a), Contractor certifies that all employees will be under the continual supervision of, and monitored by, an employee of the Contractor who the California Department of Justice ("DOJ") has ascertained, or as described below, will ascertain, has not been convicted of a violent or serious felony. The name and title of the employee who will be supervising Contractor's and its subcontractors' or suppliers' employees is:

Name: _____

Title: _____

NOTE: If Contractor is a sole proprietor, and elects the above option, Contractor must have the above-named employee's fingerprints prepared and submitted by District for submission to the DOJ, in accordance with Education Code section 45125.1(h). No work shall commence until such determination by DOJ has been made.

☐ Pursuant to Education Code section 45125.2(a), the District will take appropriate steps to protect the safety of any pupils that may come in contact with Contractor's employees, subcontractors or suppliers so that the fingerprinting and criminal background investigation requirements of Education Code section 45125.2 shall not apply to Contractor under the Contract.

☐ The Work on the Contract is either (i) at an unoccupied school site and no employee of Contractor and/or subcontractor or supplier of any tier of the Contract shall come in contact with the District pupils or (ii) if Contractor's employees or any subcontractor or supplier of any tier of the Contract interacts with pupils, such interaction shall only take place under the immediate supervision and control of the pupil's parent or guardian or a school employee, so that the fingerprinting and criminal background investigation requirements of Education Code section 45125.1 shall not apply to Contractor under the Contract.

☐ The Contractor, who is not a sole proprietor, has complied with the fingerprinting requirements of Education Code section 45125.1 with respect to all Contractor's employees and all of its Subcontractors' employees who may have contact with District pupils in the course of providing services pursuant to the Contract, and the DOJ has determined (A) that none of those employees has been convicted of a felony, as that term is defined in Education Code section 45122.1 and/or (B) that the prohibition does not apply to an employee as provided by Education Code section 45125.1(e)(2) or (3). When the Contractor performs the criminal background check, it shall immediately provide any subsequent arrest and conviction information it receives to the District pursuant to the subsequent arrest service. No work shall commence until the Department of Justice ascertains that Contractor's employees and any subcontractors' employees have not been convicted of a felony as defined in Education Code Section 45122.1.

A complete and accurate list of Contractor's employees and of all of its subcontractors' employees who may come in contact with District pupils during the course and scope of the Contract is attached hereto as ATTACHMENT "A;" and

☐ The Contractor is a sole proprietor and intends to comply with the fingerprinting requirements of Education Code section 45125.1(h) with respect to all Contractor's employees who may have contact with District pupils in the course of providing services pursuant to the Contract, and hereby agrees to the District's preparation and submission of fingerprints such that the DOJ may determine (A) that none of those employees has been convicted of a felony, as that term is defined in Education Code section 45122.1 and/or (B) that the prohibition does not apply to an employee as provided by Education Code section 45125.1(e)(2) or (3). No work shall commence until the Department of Justice ascertains that Contractor's employees and any subcontractors' employees have not been convicted of a felony as defined in Education Code Section 45122.1.

Contractor's responsibility for background clearance extends to all of its employees, Subcontractors or suppliers, and employees of Subcontractors or suppliers coming into contact with District pupils regardless of whether they are designated as employees or acting as independent contractors of the Contractor.

Date: _____

Proper Name of Contractor: _____

Signature: _____

Print Name: _____

Title: _____

[CONTINUED ON NEXT PAGE]

ATTACHMENT "A"

List of Employees/Subcontractors

Name/Company: _____

Name/Company: _____

Name/Company: _____

Name/Company: _____

Name/Company: _____

Name/Company: _____

Name/Company: _____

Name/Company: _____

Name/Company: _____

Name/Company: _____

Name/Company: _____

Name/Company: _____

Name/Company: _____

Name/Company: _____

Name/Company: _____

Name/Company: _____

Name/Company: _____

Name/Company: _____

Name/Company: _____

Name/Company: _____

Name/Company: _____

Name/Company: _____

If further space is required for the list of employees/subcontractors, attach additional copies of this page.

END OF DOCUMENT

DOCUMENT 00 45 49

REGISTERED SUBCONTRACTORS LIST

(Labor Code Section 1771.1)

PROJECT: **Tamalpais High School Pool Replastering Project**

Date Submitted (for Updates): _____

Contractor acknowledges and agrees that it must clearly set forth below the name and Department of Industrial Relations (DIR) registration number of each subcontractor **for all tiers** who will perform work or labor or render service to Contractor or its subcontractors in or about the construction of the Work **at least two (2) weeks before the subcontractor is scheduled to perform work**. This document is to be updated as all tiers of subcontractors are identified.

Contractor acknowledges and agrees that, if Contractor fails to list as to any subcontractor of any tier who performs any portion of Work, the Contract is subject to cancellation and the Contractor will be subjected to penalty under applicable law.
If further space is required for the list of proposed subcontractors, attach additional copies of page 2 showing the required information, as indicated below.

Subcontractor Name: _____

DIR Registration #: _____

Portion of Work: _____

Subcontractor Name: _____

DIR Registration #: _____

Portion of Work: _____

Subcontractor Name:

DIR Registration #: _____

Portion of Work: _____

Subcontractor Name:

DIR Registration #: _____

Portion of Work: _____

Subcontractor Name:

DIR Registration #: _____

Portion of Work: _____

Subcontractor Name:

DIR Registration #: _____

Portion of Work: _____

Subcontractor Name:

DIR Registration #: _____

Portion of Work: _____

Subcontractor Name:

DIR Registration #: _____

Portion of Work: _____

Subcontractor Name:

DIR Registration #: _____

Portion of Work: _____

Subcontractor Name:

DIR Registration #: _____

Portion of Work: _____

Subcontractor Name:

DIR Registration #: _____

Portion of Work: _____

Subcontractor Name:

DIR Registration #: _____

Portion of Work: _____

Date: _____

Name of Contractor: _____

Signature: _____

Print Name: _____

Title: _____

END OF DOCUMENT

TAMALPAIS UNION HIGH
SCHOOL DISTRICT

NOTICE OF AWARD

Contractor: ***Contractor Name*** *(Contractor Address))*

Project: **Tamalpais High School Pool Replastering Project - BID NO. 109**

Contractor has been awarded the Contract for the above-referenced Project on ***Date of Award***, by action of the District's Board of Trustees at the public Board meeting held on ***Date of Board Approval*** (if needed).

The Contract Price is ***Contract Price – spelled out ($xxx,xxx,xxx)***.

You are required to execute the Contract and furnish the required documents listed below within **ten (10) calendar days** from the date of issuance of this Notice of Award (as signed and dated below):

a. *Agreement:* To be executed by successful Bidder; submit three (3) copies, each bearing an original signature.

b. *Performance Bond (100%):* On the form provided in the Contract Documents and fully executed as indicated on the form.

c. *Payment Bond (Contractor's Labor & Material Bond) (100%):* On the form provided in the Contract Documents and fully executed as indicated on the form.

d. *Insurance Certificates and Endorsements:* As required.

e. *Workers' Compensation Certification*.

f. *Prevailing Wage and Related Labor Requirements Certification*.

g. *Disabled Veteran Business Enterprise Participation Certification:* As required.

h. *Drug-Free Workplace Certification:* As required.

i. *Tobacco-Free Workplace Certification:* As required.

j. *Drug & Alcohol-Free Schools Certification*: As required.

k. *Workplace Violence Prevention Plan Certification*

l. *Hazardous Materials Certification:* As required.

m. *Lead-Based Materials Certification:* As required.

n. *Imported Materials Certification:* As required.

o. *Criminal Background Investigation/Fingerprinting Certification*.

p. *Registered Subcontractors List: Must include Department of Industrial Relations (DIR) registration number of each subcontractor for all tiers.*

Failure to comply with these conditions within the time specified will entitle the District to consider your bid abandoned, to annul this Notice of Award, and to declare your Bid Security forfeited, as well as any other rights the District may have against the Contractor.

You are required to return an acknowledged copy of this Notice of Award to the District, attention to Mike Woolard, Senior Director of Facilities Planning. After you comply with these conditions, the District will provide one fully-signed original of the Agreement.

SIGNATURE

Dated: _____

By: _____

Mike Woolard
Senior Director of Facilities Planning

Contractor to sign and date this NOA to acknowledge acceptance.

Contractor's Acknowledgement of Acceptance for Notice of Award:

Receipt of this Notice of Award is hereby acknowledged by **Contractor Name**

_____ _____

Authorized Company Representative ***Date***

_____

Title

AGREEMENT FOR CONSTRUCTION SERVICES (SMALL PROJECTS)

AGREEMENT NUMBER 109

THIS AGREEMENT is made and entered into this _____ day of _____ _____, 2026, by and between _____ ("Contractor") and Tamalpais Union High School District ("District") ("Contract").

1. The Contractor shall furnish to the District for a total price of _____ _____ Dollars ($_____) ("Contract Price"), the following services ("Services" or "Work"):

   _____

   Contractor's duties and services under this Contract shall not include preparing or assisting the District with any portion of the District's preparation of a request for proposals, request for qualifications, or any other solicitation regarding a subsequent or additional contract with the District. The District shall at all times retain responsibility for public contracting, including with respect to any subsequent phase of this Project. Contractor's participation in the planning, discussions, or drawing of project plans or specifications shall be limited to conceptual, preliminary, or initial plans or specifications. Contractor shall cooperate with the District to ensure that all bidders for a subsequent contract on any subsequent phase of this Project have access to the same information, including all conceptual, preliminary, or initial plans or specifications prepared by Contractor pursuant to this Contract.

2. Payment for the Work shall be made in accordance with the Terms and Conditions.

3. Contractor shall perform the Work at Tamalpais High School, 700 Miller Ave., Mill Valley, CA ("Site"). The Project is the scope of Work performed at the Site.

4. Work shall be completed within Sixty (60) consecutive calendar days ("Contract Time") from the date specified in the District's Notice to Proceed, unless terminated earlier by the District for cause or for convenience.

   It is understood and agreed that the Work shall be performed and completed as required in the Contract Documents (as defined herein) including, without limitation, the Drawings and Specifications and submission of all documents required to secure funding or by the Division of the State Architect ("DSA") for close-out of the Project, under the direction and supervision of, and subject to the approval of, the District or its authorized representative.

5. Contractor agrees that if the Work is not completed within the Contract Time and/or pursuant to the completion schedule, construction schedule, or project milestones developed pursuant to provisions of the Contract, it is understood, acknowledged, and agreed that the District will suffer damage which is not capable of being calculated. Pursuant to Government Code section 53069.85, Contractor shall pay to the District, as fixed and liquidated damages for these incalculable damages, the sum of One Thousand Dollars ($1,000) per day for each and every calendar day of delay beyond the Contract Time or beyond any completion schedule, construction schedule, or project milestones established pursuant to the Contract.

[REMAINDER OF PAGE LEFT BLANK INTENTIONALLY]

6. This Contract incorporates by this reference the Contract Documents attached hereto. Contractor, by executing this Contract, agrees to comply with all obligations set forth in the Contract Documents. The Contract Documents include only the following documents, as indicated:

__X__ Notice to Bidders
__X__ Instructions to Bidders
__X__ Bid Form and Proposal
__X__ Bid Bond
__X__ Designated Subcontractors List
__X___ Site Visit/Job Walk Certification
__X__ Noncollusion Declaration
__X__ Iran Contracting Act Certification
__X__ Workers' Compensation Certification
__X__ Prevailing Wage Certification
__X_ Disabled Veterans' Business Enterprise Participation Certification
__X_ Drug-Free Workplace Certification
__X_ Tobacco-Free Environment Certification
__X__ Drug & Alcohol-Free Schools Certification
__X_ Workplace Violence Prevention Plan Certification
__X_Hazardous Materials Certification
__X__ Lead-Product(s) Certification
__X_ Imported Materials Certification
__X__ Criminal Background Investigation / Fingerprinting Certification
__X__ Registered Subcontractor List
__X_ Notice to Award
__X__ Agreement Form
__X__ Exhibit "A" ("Scope of Work")
__X__ Notice of Proceed
__X__ Performance Bond
__X__ Payment Bond
__X___ Guarantee Form
__X__ Insurance Certificates and Endorsements
__X__ Specifications
__X__ Plans

7. Contractor shall not commence the Work under this Contract until the Contractor has submitted and the District has approved the performance bond, payment (labor and material) bond, the certificate(s) and the endorsement(s) of insurance required under the Terms and Conditions and the District has issued a Notice to Proceed.

8. The Design Professional In General Responsible Charge for the Project is RS+M Design/Engineering ("Architect"), the construction manager on the Project is Greystone West Company ("Construction Manager"), and the project inspector on the Project is _____TBD_____ ("Project Inspector"). Contractor hereby acknowledges that the Architect, the Construction Manager, the Project Inspector, and the Division of the State Architect have authority to approve and/or suspend Work if the Contractor's Work does not comply with the requirements of the Contract Documents, Title 24 of the California Code of Regulations, and all applicable laws. No work shall be carried on except with the knowledge and under the inspection of said Project Inspector. Project Inspector shall have free access to any or all parts of work at any time. Contractor shall furnish Project Inspector reasonable opportunities for obtaining such information as may be necessary to keep Project Inspector fully informed respecting progress, manner of work, and character of materials. The Contractor shall be liable for any delay caused by its non-compliant Work or its failure to provide proper notification for inspection.

9. Inspection and acceptance of the Work shall be performed by Mike Woolard of the Planning Department of the District.

10. Any notice required or permitted to be given under this Contract shall be deemed to have been given, served, and received if given in writing and either personally delivered or deposited in the United States mail, registered or certified mail, postage prepaid, return receipt required, or sent by overnight delivery service, or facsimile or email, addressed as follows:

District	**Contractor**
Tamalpais Union High School District	Name: _____
ATTN: Mike Woolard	ATTN: _____
333 Doherty Drive, Larkspur, CA	[ADDRESS]
mwoolard@tamdistrict.org	[EMAIL]

Any notice personally given or sent by facsimile or email shall be effective upon receipt. Any notice sent by overnight delivery service shall be effective the business day next following delivery to the overnight delivery service. Any notice given by mail shall be effective three (3) days after deposit in the United States mail.

11. Contractor shall guarantee all labor and material used in the performance of this Contract for a period of one (1) year from the date of the District's written approval of the Work.

12. This Contract incorporates by this reference the Terms and Conditions attached hereto. Contractor, by executing this Contract, agrees to comply with all the Terms and Conditions.

13. Each exhibit attached hereto is hereby incorporated herein by reference.

14. Each party has the full power and authority to enter into and perform this Contract, and the person signing this Contract on behalf of each party has been properly authorized and empowered to enter into this Contract.

15. This Contract may be executed in one or more counterparts, and all counterparts together shall be construed as one document. A facsimile or electronic signature shall be deemed to be the equivalent of the actual original signature. All counterparts so executed shall constitute one Contract binding all the Parties hereto.

16. By signing this Contract, Contractor certifies, under penalty of perjury, that all the information provided in the Contract Documents is true, complete, and correct.

[SIGNATURES ON FOLLOWING PAGE]

ACCEPTED AND AGREED on the date indicated below:

Dated: _____, 2026

Tamalpais Union High School District

Signature: _____

Print Name: Mike Woolard

Print Title: Senior Director of Facilities Planning

Address: 333 Doherty Drive, Larkspur, CA

Telephone: 415-945-1083

E-Mail: mwoolard@tamdistrict.org

Dated: _____, 2026

Contractor: _____

Signature: _____

Print Name: _____

Print Title: _____

License No.: _____

Registration No.: _____

Address: _____

Telephone: _____

Facsimile: _____

E-Mail: _____

Information regarding Contractor:

Type of Business Entity:
_____ Individual
_____ Sole Proprietorship
_____ Partnership
_____ Limited Partnership
_____ Corporation, State: _____
_____ Limited Liability Company
_____ Other: _____

_____:
Employer Identification and/or
Social Security Number

NOTE: Section 6041 of the Internal Revenue Code (26 U.S.C. 6041) and Section 1.6041-1 of Title 26 of the Code of Federal Regulations (26 C.F.R. 1.6041-1) requires the recipients of $600.00 or more to furnish their taxpayer information to the payer. In order to comply with these requirements, the District requires the Contractor to furnish the information requested in this section.

[REMAINDER OF PAGE LEFT BLANK INTENTIONALLY; TERMS AND CONDITIONS FOLLOW]

TERMS AND CONDITIONS TO CONTRACT

1. NOTICE TO PROCEED: District shall provide a Notice to Proceed to Contractor pursuant to the Contract at which time Contractor shall proceed with the Work.

2. STANDARD OF CARE: Contractor shall perform, diligently prosecute and complete the Work in a good and workmanlike manner within the Contract Time, and in strict conformity with all Contract Documents.

3. SITE EXAMINATION: Contractor has examined the Site and certifies that it accepts all measurements, specifications and conditions affecting the Work to be performed at the Site. By submitting its quote, Contractor warrants that it has made all Site examination(s) that it deems necessary as to the condition of the Site, its accessibility for materials, workers and utilities, and Contractor's ability to protect existing surface and subsurface improvements. No claim for allowance of time or money will be allowed as to any other undiscovered condition on the Site.

4. PERMITS, LICENSES AND REGISTRATION: Contractor and all of its employees, agents, and subcontractors shall secure and maintain in force, at Contractor's sole cost and expense, all licenses, registration and permits as are required by law, in connection with the furnishing of materials, supplies, or services herein listed.

5. PROJECT INSPECTION CARD: Contractor shall verify that forms DSA 152 Project Inspection Card (or current version) are issued for the Project prior to commencement of construction.

6. NOTIFICATION: Contractor shall notify the Architect and Project Inspector, in writing, of the commencement and completion of construction of each and every aspect of the work at least 48 hours in advance by submitting form DSA 156 (or current version) to the Project Inspector. Forms are available on the DSA's website at: http://www.dgs.ca.gov/dsa/Forms.aspx.

7. LABOR, MATERIALS AND EQUIPMENT: Contractor shall furnish all tools, equipment, apparatus, facilities, transportation, labor, and material necessary to furnish the services herein described, the services to be performed at such times and places as directed by and subject to the approval of the authorized District representative indicated in the Work specifications attached hereto. Unless otherwise specified, all materials shall be new and previously unused, and of the manufacturer's latest model or the best of their respective kinds and grades as noted or specified, and workmanship shall be of good quality.

8. SUBSTITUTIONS: No substitutions of material from those specified in the Work Specifications shall be made without the prior written approval of the District. Contractor shall be responsible for any re-design costs occasioned by District's acceptance and/or approval of any substitute, as well as any costs that the District incurs for professional services, including DSA fees. District may deduct those costs from any amounts owing to Contractor for the review of the request for substitution, even if the request for substitution is not approved. Contractor shall, in the event that a substitute is less costly than that specified, credit the District with one-hundred percent (100%) of the net difference between the substitute and the originally specified material.

9. INDEPENDENT CONTRACTOR: Contractor represents and warrants that Contractor is an independent contractor or business entity that is: (i) free from the control and direction of the District in connection with the performance of the Services, (ii) performing Services that are outside the usual course of the District's business, and (iii) customarily engaged in an independently established trade, occupation, or business of the same nature as that involved in the Services performed, District being interested only in the results obtained. Contractor understands and agrees that it and all of its employees shall not be considered officers, employees, agents, partner, or joint venture of the District, and are not entitled to benefits of any kind or nature normally provided employees of the District and/or to which District's employees are normally entitled, including, but not limited to, State Unemployment Compensation or Worker's Compensation. Contractor shall assume full responsibility for payment of all federal, state, and local taxes or contributions, including unemployment insurance, social security, and income taxes with respect to Consultant's employees.

10. CONTRACTOR SUPERVISION: Contractor shall provide competent supervision of personnel employed on the job Site, use of equipment, and quality of workmanship.

11. WORKERS: Contractor shall at all times enforce strict discipline and good order among its employees and the employees of its subcontractors and shall not employ or work any unfit person or anyone not skilled in work assigned to him or her. Any person in the employ of the Contractor or a

subcontractor whom the District may deem incompetent or unfit shall be dismissed from the Site and shall not again be employed at Site without written consent from the District.

12. SUBCONTRACTORS: Subcontractors, if any, engaged by the Contractor for any Service or Work under this Contract shall be subject to the approval of the District. Contractor agrees to bind every subcontractor by the terms of the Contract as far as such terms are applicable to subcontractor's work, including, without limitation, all registration, indemnification, insurance, bond, and warranty requirements. If Contractor shall subcontract any part of this Contract, Contractor shall be fully responsible to the District for acts and omissions of its subcontractor and of persons either directly or indirectly employed by itself. Nothing contained in the Contract Documents shall create any contractual relations between any subcontractor and the District.

13. SAFETY AND SECURITY: Contractor is responsible for maintaining safety in the performance of this Contract. Contractor shall be responsible to ascertain from the District the rules and regulations pertaining to safety, security, and driving on school grounds, particularly when children are present.

14. RESERVED:

15. RESERVED:

16. LEAD-BASED PAINT: Pursuant to the Lead-Safe Schools Protection Act (Education Code section 32240 et seq.) and other applicable law, no lead-based paint, lead plumbing and solders, or other potential sources of lead contamination shall be utilized on this Project, and only trained and state-certified contractors, inspectors and workers shall undertake any action to abate existing risk factors for lead. Pursuant to the Renovation, Repair and Painting Rule (title 40 of the Code of Federal Regulations part 745 (40 CFR 745)), all contractors who disturb lead-based paint in a six-square-foot area or greater indoors or a 20-square-foot area or greater outdoors must be trained by an EPA-accredited provider and certified by the EPA. Contractor must execute the Lead-Based Paint Certification, if applicable.

17. RESERVED:

18. CLEAN UP: Debris shall be removed from the Site. The Site shall be in order at all times when work is not actually being performed and shall be maintained in a reasonably clean condition.

19. PROTECTION OF WORK AND PROPERTY: Contractor shall erect and properly maintain at all times, as required by conditions and progress of the Work, all necessary safeguards, signs, barriers, lights, and security persons for protection of workers and the public, and shall post danger signs warning against hazards created by the Work. In an emergency affecting life and safety of life or of Work or of adjoining property, Contractor, without special instruction or authorization from District, is permitted to act at his discretion to prevent such threatened loss or injury.

20. FORCE MAJEURE: "Force Majeure" means any event or circumstance unknown at the time of contracting that is beyond the parties' control and makes performance of the contract impractical or impossible. The Party seeking to have its performance obligation(s) excused must demonstrate that there was such an insuperable interference occurring without the party's intervention as could not have been prevented by the exercise of prudence, diligence, and care, by providing prompt notice to the other Party, including full particulars of such event, of its inability to perform its obligations due to such event, following commencement of the claiming Party's inability to so perform its obligations. To the extent satisfying these conditions, Force Majeure events include the following: acts of God, war, civil unrest, epidemic, fire, smoke, volcanic eruption, earthquake, strike, unusually severe weather, flood, or shortage of transportation facilities, lock out, or commandeering of materials, product, plant, or facilities by the government. Force Majeure shall not be based on a Party's financial inability to perform under this Agreement unless there exists extreme and unreasonable difficulty, expense, injury, or loss involved. A Force Majeure event does not include an act of negligence or intentional wrongdoing by a Party. Any Party claiming a Force Majeure event shall use reasonable diligence to remove the condition that prevents performance and shall not be entitled to suspend performance of its obligations in any greater scope or for any longer duration than is required by the Force Majeure event. Each Party shall use its best efforts to mitigate the effects of such Force Majeure event, remedy its inability to perform, and resume full performance of its obligations hereunder. Costs imposed by the government on sales or importation of goods or materials including, without limitation, tariffs or taxes, are not Force Majeure.

21. CORRECTION OF ERRORS: Contractor shall perform, at its own cost and expense and without reimbursement from the District, any work necessary to correct errors or omissions that are caused by the Contractor's failure to comply with the approved plans and specifications and the standard of care required herein. Schedule delays resulting from unauthorized work shall be Contractor's responsibility.

22. NO RELIEF FROM OBLIGATIONS BASED ON REVIEW BY OTHER PERSONS: Contractor shall not be relieved of obligations to perform the Work in accordance with the Contract Documents by act or omission of the District, Architect, Construction Manager, Project Inspector, or DSA or other entities having jurisdiction including, but not limited to, administration of the Contract, review of submittals, or by tests, observation, inspection, or permit/interconnection approvals.

23. DISTRICT'S RIGHT TO PERFORM WORK: If the Contractor should neglect to prosecute the Work properly or fail to perform any provisions of this Contract, the District, after **FORTY-EIGHT (48)** hours' written notice to the Contractor, may make good such deficiencies, without prejudice to any other remedy it may have, including but not limited to the District hiring its own forces or another contractor to replace the Contractor's nonconforming Work, in which case the District shall either issue a deductive Change Order, a Construction Change Directive, or invoice the Contractor for the cost of that work. Contractor shall pay any invoices within thirty (30) days of receipt of same or District may withhold those amounts from payment(s) otherwise due to Contractor.

24. ACCESS TO WORK: District representatives, Architect, and Project Inspector shall at all times have access to the Work wherever it is in preparation or in progress. Contractor shall provide safe and proper facilities for such access.

25. OCCUPANCY: District reserves the right to occupy buildings at any time before formal Contract completion and such occupancy shall not constitute final acceptance or approval of any part of the Work covered by this Contract, nor shall such occupancy extend the date specified for completion of the Work.

26. PAYMENT: On a monthly basis, Contractor shall submit an application for payment based upon the estimated value for materials delivered or services performed under the Contract as of the date of submission ("Application for Payment"). Within thirty (30) days after District's approval of the Application for Payment, Contractor shall be paid a sum equal to ninety-five percent (95%) of the value of the Work performed (as verified by Architect and Inspector and certified by Contractor) up to the last day of the previous month, less the aggregate of previous payments and amount to be withheld. The District may withhold or deduct from any payment an amount necessary to protect the District from loss because of: (1) liquidated damages which have accrued as of the date of the application for payment; (2) any sums expended by the District in performing any of Contractor's obligations under the Contract which Contractor has failed to perform or has performed inadequately; (3) defective Work not remedied; (4) stop payment notices as allowed by state law; (5) reasonable doubt that the Work can be completed for the unpaid balance of the Total Contract price or by the scheduled completion date; (6) unsatisfactory prosecution of the Work by Contractor; (7) unauthorized deviations from the Contract; (8) failure of the Contractor to maintain or submit on a timely basis proper and sufficient documentation as required by the Contract or by District during the prosecution of the Work; (9) erroneous or false estimates by the Contractor of the value of the Work performed; (10) any sums representing expenses, losses, or damages, as determined by the District, incurred by the District for which Contractor is liable under the Contract; and (11) any other sums which the District is entitled to recover from Contractor under the terms of the Contract or pursuant to state law, including section 1727 of the California Labor Code. The failure by the District to deduct any of these sums from a progress payment shall not constitute a waiver of the District's right to such sums. The District shall retain five percent (5%) from all amounts owing as retention. Retention shall be paid pursuant to Public Contract Code sections 7107, 7200 and 7201.

27. AUDIT. Contractor shall establish and maintain books, records, and systems of account, in accordance with generally accepted accounting principles, reflecting all business operations of Contractor transacted under this Contract. Contractor shall retain these books, records, and systems of account during the Term of this Contract and for five (5) years thereafter. Contractor shall permit District, its agent, other representatives, or an independent auditor to audit, examine, and make excerpts, copies, and transcripts from all books and records, and to make audit(s) of all billing statements, invoices, records, and other data related to the Work covered by this Contract. Audit(s) may be performed at any time, provided that District shall give reasonable prior notice to Contractor and shall conduct audit(s) during Contractor's normal business hours, unless Contractor otherwise consents.

28. CHANGE IN SCOPE OF WORK:

28.1. Changes in Scope of Work. Any change in the scope of the Work, method of performance, nature of materials or price thereof, or any other matter materially affecting the performance or nature of the Work shall not be paid for or accepted unless such change, addition, or deletion is approved in advance and in writing by a valid change order executed by the District. Contractor

specifically understands, acknowledges, and agrees that the District shall have the right to request any alterations, deviations, reductions, or additions to the Project or Work, and the cost thereof shall be added to or deducted from the amount of the Contract Price by fair and reasonable valuations. Contractor shall include maximums of ten percent (10%) mark-up for all tiers of subcontractors, five percent (5%) for overhead and profit, and two and one-half percent (2.5%) for bonds and insurance. Contractor also agrees to provide the District with all information requested to substantiate the cost of the change order and to inform the District whether the Work will be done by the Contractor or a subcontractor. In addition to any other information requested, Contractor shall submit, prior to approval of the change order, its request for a time extension (if any), as well as all information necessary to substantiate its belief that such change will delay the completion of the Work. If Contractor fails to submit its request for a time extension or the necessary supporting information, it shall be deemed to have waived its right to request such extension.

28.2. Allowances. If there is an Allowance, then Contractor shall not bill for or be due any portion of an Allowance unless Owner has identified specific work, Contractor has submitted a price for that work or Owner has proposed a price for that work, Owner has accepted the cost for that work, and Owner has executed an Allowance Expenditure Directive incorporating that work. Allowance Expenditure Directives shall be based on Contractor's costs, without overhead and profit, for products, delivery, installation, labor, insurance, payroll, taxes, bonding and equipment rental will be included in Allowance Expenditure Directive authorizing expenditure of funds from the Allowance. No overhead and profit shall be added to the Allowance Expenditure Directive.

29. INDEMNIFICATION:

29.1. To the furthest extent permitted by California law, Contractor shall indemnify and hold harmless the District and its Governing Board, agents, representatives, employees, consultants, and volunteers (the "Indemnified Parties") from any and all demands, damages, injuries, losses, expenses, liabilities, claims, suits, and actions (the "Claims") of any kind, nature, and description, including, but not limited to, attorneys' fees and costs, directly or indirectly arising from, arising out of, connected with, or resulting from the performance of this Contract unless the claims are caused by the active negligence or willful misconduct of the Indemnified Parties and/or defects in design furnished by the Architect, as found by a court or arbitrator of competent jurisdiction, in which case the Contractor's indemnification and hold harmless obligation shall be reduced by the proportion of the Indemnitees' and/or Architect's liability.

29.2. Contractor shall also, to the furthest extent permitted by California law, defend the Indemnified Parties at Contractor's own expense, including attorneys' fees and costs, from any and all claims directly or indirectly arising from, arising out of, connected with, or resulting from the performance of this Contract unless the claims are caused by the active negligence or willful misconduct of the Indemnified Parties and/or defects in design furnished by the Architect, as found by a court or arbitrator of competent jurisdiction, in which case, without impacting Contractor's obligation to provide an immediate and ongoing defense of the Indemnified Parties, the Contractor's defense obligation shall be retroactively reduced by the proportion of the Indemnitees' and/or Architect's liability. The District shall have the right to accept or reject any legal representation that Contractor proposes to defend the District.

29.3. Pursuant to Public Contract Code section 9201, the District shall provide timely notification to Contractor of the receipt of any third-party claim relating to this Contract. The District shall be entitled to recover its reasonable costs incurred in providing said notification.

29.4. If the Indemnitees provide their own defense due to failure to timely respond to tender of defense, rejection of tender of defense, or conflict of interest of proposed counsel, Contractor shall reimburse Indemnitees for any expenditures, including reasonable attorney's fees and costs.

29.5. The District may retain so much of the moneys due the Contractor as shall be considered necessary, until disposition of any such suit, claims or actions for damages or until the District has received written agreement from the Contractor that it will unconditionally defend the Indemnified Parties, and pay any damages due by reason of settlement or judgment.

29.6. The Contractor's defense and indemnification obligations hereunder shall survive the completion of Work, including the warranty/guarantee period, and/or the termination of the Contract.

30. PAYMENT BOND AND PERFORMANCE BOND: Contractor shall not commence the Work until it has provided to the District, in a form acceptable to the District, a Payment (Labor and Material) Bond and a Performance Bond, each in an amount equivalent to one hundred percent (100%) of the Contract Price issued by a surety admitted to issue bonds in the State of California and otherwise acceptable to the District.

31. CONTRACTOR'S INSURANCE:

31.1. The Contractor shall procure and maintain at all times it performs any portion of the Services the following insurance with minimum limits not less than the amount indicated below. If Contractor normally carries insurance in an amount greater than the minimum amounts required by District, that greater amount shall become the minimum required amount of insurance for purposes of the Contract. Therefore, Contractor hereby acknowledges and agrees that all insurance carried by it shall be deemed liability coverage for all actions it performs in connection with the Contract.

Type of Coverage		**Minimum Requirement**
Commercial General Liability	Product Liability and Completed Operations, Fire Damage Liability – Split Limit	$1,000,000 per occurrence; $2,000,000 aggregate
Automobile Liability	Any Auto – Combined Single Limit	$1,000,000
Workers' Compensation		Statutory limits pursuant to State law
Employers' Liability		$1,000,000 per accident for bodily injury or disease
Builder's Risk (Course of Construction)		Full replacement value for scope of Work
Pollution Liability		$1,000,000 per claim; $2,000,000 aggregate

31.1.1. Commercial General Liability and Automobile Liability Insurance. Commercial General Liability Insurance and Any Auto Automobile Liability Insurance that shall protect the Contractor, the District, and the State from all claims of bodily injury, property damage, personal injury, death, advertising injury, and medical payments arising performing any portion of the Services. (Form CG 0001 and CA 0001, or forms substantially similar, if approved by the District.)

31.1.2. Workers' Compensation and Employers' Liability Insurance. Workers' Compensation Insurance and Employers' Liability Insurance for all of its employees performing any portion of the Services. In accordance with provisions of section 3700 of the California Labor Code, the Contractor shall be required to secure workers' compensation coverage for its employees. If any class of employee or employees engaged in performing any portion of the Services under this Contract are not protected under the Workers' Compensation Statute, adequate insurance coverage for the protection of any employee(s) not otherwise protected must be obtained before any of those employee(s) commence performing any portion of the Services.

31.2. Proof of Insurance. The Contractor shall not commence performing any portion of the Services until all required insurance has been obtained and certificates indicating the required

coverage have been delivered in duplicate to the District and approved by the District. Certificates and insurance policies shall include the following:

31.2.1. Language stating in particular those insured, extent of insurance, location and operation to which insurance applies, expiration date, to whom cancellation notice will be sent, and length of notice period.

31.2.2. A clause stating: "This policy shall not be canceled until notice has been mailed to the District, stating date of cancellation. Date of cancellation shall not be less than thirty (30) days after date of mailing notice."

31.2.3. An endorsement stating that the District and its Governing Board, agents, representatives, employees, consultants, and volunteers are named additional insured under all policies except Workers' Compensation Insurance, and Employers' Liability Insurance.

31.2.4. All policies except the Workers' Compensation Insurance, and Employers' Liability Insurance Policies shall be written on an occurrence form.

31.2.5. An endorsement stating that Contractor's insurance policies shall be primary to any insurance or self-insurance maintained by District.

31.2.6. An endorsement stating that there shall be a waiver of any subrogation.

31.2.7. Contractor's insurance limit shall apply separately to each insured against whom a claim is made or suit is brought.

31.3. Acceptability of Insurers. Insurance is to be placed with insurers with a current A.M. Best's rating of no less than A: VII, unless otherwise acceptable to the District.

32. WARRANTY/QUALITY: Unless a longer warranty is called for elsewhere in the Contract Documents, the Contractor, manufacturer, or their assigned agents shall guarantee the workmanship, product or service performed against defective workmanship, defects or failures of materials for a minimum period of one (1) year from filing the Notice of Completion with the county in which the Site is located. All workmanship and merchandise must be warranted to be in compliance with applicable California energy, conservation, environmental, and educational standards.

33. CONFIDENTIALITY: The Contractor shall maintain the confidentiality of any student, parent, personnel, and/or disciplinary information that Contractor encounters while performing the Work. This requirement shall be ongoing and shall survive the expiration or termination of this Contract.

34. LIMITATION OF DISTRICT LIABILITY: District's financial obligations under this Contract shall be limited to the payment of the compensation provided in this Contract. Notwithstanding any other provision of this Contract, in no event shall District be liable, regardless of whether any claim is based on contract or tort, for any special, consequential, indirect or incidental damages, including, but not limited to, lost profits or revenue, or lost bonding capacity, arising out of or in connection with this Contract for the services performed in connection with this Contract.

35. COMPLIANCE WITH LAWS: Contractor shall give all notices and comply with all laws, ordinance, rules and regulations bearing on conduct of the Work as indicated or specified. If Contractor observes that any of the Work required by this Contract is at variance with any such laws, ordinance, rules or regulations, Contractor shall notify the District, in writing, and, at the sole option of the District, any necessary changes to the scope of the Work shall be made and this Contract shall be appropriately amended in writing, or this Contract shall be terminated effective upon Contractor's receipt of a written termination notice from the District. If Contractor performs any work that is in violation of any laws, ordinances, rules or regulations, without first notifying the District of the violation, Contractor shall bear all costs arising therefrom.

36. LABOR CODE REQUIREMENTS: Contractor represents that Contractor and all Subcontractors shall not be presently debarred, suspended, proposed for disbarment, declared ineligible or excluded. Contractor shall comply with all applicable provisions of the California Labor Code, Division 2, Part 7, Chapter 1, Articles 1 – 5, including, without limitation, the payment of the general prevailing per diem wage rates for public work projects of more than one thousand dollars ($1,000). Copies of the prevailing rate of per diem wages are on file with the District or available online at http://www.dir.ca.gov/. In addition, the Contractor and each subcontractor shall comply with Section 1735 forbidding discrimination and Sections 1777.5 and 1777.6 concerning the employment of apprentices by Contractor or subcontractors.

36.1. Registration: Contractor and its subcontractor(s) shall be registered with the Department of Industrial Relations pursuant to Labor Code section 1725.5 and in accordance with Labor Code section 1771.1.

36.2. Registered Subcontractor List: Within 30 days of the award of contract or prior to commencing the Work under this Contract, whichever occurs first, Contractor shall provide District all information required by Labor Code section 1773.3, as amended by Stats. 2017, Ch. 28, Sec. 21, for Company and all tiers of Subcontractors to enable District to provide notice to the Department of Industrial Relations (DIR) of the Contract (PWC-100 form). Contractor shall submit and maintain an updated Registered Subcontractor List including all Subcontractors of any tier furnishing labor, material, or equipment to the Project.

36.3. Certified Payroll Records: Contractor and its subcontractor(s) shall upload certified payroll records ("CPR") electronically using California Department of Industrial Relations' (DIR) eCPR System by uploading the CPRs by electronic XML file or entering each record manually using the DIR's iform (or current form) online directly to the DIR on no less than every 30 days while Work is being performed and within 30 days after the final day of Work performed on the Project, and within ten (10) days of any request by the District or Labor Commissioner at http://www.dir.ca.gov/Public-Works/Certified-Payroll-Reporting.html or current application and URL, showing the name, address, social security number, work classification, straight time, and overtime hours worked each day and week, and the actual per diem wages paid to each journeyman, apprentice, worker, or other employee employed by the Contractor and/or each subcontractor in connection with the Work.

36.4. Labor Compliance: Contractor shall perform the Work of the Project while complying with all the applicable regulations, including section 16000, et seq., of Title 8 of the California Code of Regulations and is subject to labor compliance monitoring and enforcement by the Department of Industrial Relations.

37. ANTI-DISCRIMINATION: Contractor herein agrees to comply with the provisions of the California Fair Employment and Housing Act as set forth in part 2.8 of division 3 of the California Government Code, commencing at section 12900; the Federal Civil Rights Act of 1964, as set forth in Public Law 88-352, and all amendments thereto; Executive Order 11246; and all administrative rules and regulations found to be applicable to Contractor and all of its subcontractors. In addition, the Contractor agrees to require like compliance by all its subcontractor(s).

38. DISABLED VETERAN BUSINESS ENTERPRISES: Section 17076.11 of the Education Code requires school districts using funds allocated pursuant to the State of California School Facility Program for the construction or modernization of a school building (SFP Funds) to have a participation of at least three percent (3%), per year, of the overall dollar amount expended each year by the school district, for disabled veteran business enterprises (DVBE). If this Contract uses SFP Funds, Contractor must submit, with its executed Contract, appropriate documentation to the District identifying the steps Contractor has taken to solicit DVBE participation in conjunction with this Contract.

39. ANTI-TRUST CLAIM: Contractor and its subcontractor(s) agree to assign to the District all rights, title, and interest in and to all causes of action they may have under Section 4 of the Clayton Act (15 U.S.C. Sec. 15) or under the Cartwright Act (Chapter 2 (commencing with Section 16700) of Part 2 of Division 7 of the Business and Professions Code), arising from purchases of goods, services, or materials pursuant to the Contract or a subcontract. This assignment shall be made and become effective at the time the District tenders final payment to the Contractor, without further acknowledgment by the parties.

40. CONTRACTOR CLAIMS: In the event of any demand by Contractor for (A) a time extension, including, without limitation, for relief from damages or penalties for delay assessed by the District under the Contract, (B) payment by the District of money or damages arising from work done by, or on behalf of, the Contractor pursuant to the Contract and payment of which is not otherwise expressly provided for or to which Contractor is not otherwise entitled to, or (C) an amount of payment disputed by the District, the parties shall attempt to resolve the dispute by those procedures set forth in Public Contract Code section 9204 and/or Article 1.5 (commencing with section 20104) of Chapter 1, Part, 3, Division 2, of the Public Contract Code, if applicable, the provisions of which are each attached hereto and incorporated herein by this reference. If a claim, or any portion thereof, remains in dispute upon satisfaction of all applicable dispute resolution requirements, the Contractor shall comply with all claims presentation requirements as provided in Chapter 1 (commencing with section 900) and Chapter 2 (commencing with section 910) of Part 3 of Division 3.6 of Title 1 of Government Code as a condition

precedent to the Contractor's right to bring a civil action against the District. For purposes of those provisions, the running of the time within which a claim must be presented to the District shall be tolled from the time the Contractor submits its written claim until the time the claim is denied, including any time utilized by any applicable meet and confer process. Pending resolution of the dispute, Contractor and its subcontractors shall continue to perform the Work under the Contract and shall not cause a delay of the Work, including the disputed work, during any dispute, claim, negotiation, mediation, or arbitration proceeding, except by written agreement of the District.

41. ATTORNEY FEES/COSTS: Should litigation be necessary to enforce any terms or provisions of this Contract, then each party shall bear its own litigation and collection expenses, witness fees, court costs and attorney's fees.

42. TERMINATION:

42.1. If Contractor fails to perform the Services and Contractor's duties to the satisfaction of the District, or if Contractor fails to fulfill in a timely and professional manner Contractor's obligations under this Contract, or if Contractor violates any of the terms or provisions of this Contract, District shall have the right to terminate this Contract and/or Contractor's right to perform the Work of the Contract for cause effective immediately upon the District giving written notice thereof to Contractor. Contractor and its performance bond surety, if any, shall be liable for all damages caused to the District by reason of Contractor's failure to perform and complete the Contract. In the event termination for cause is determined to have not been for cause, the termination shall be deemed to have been a termination for convenience effective as of the same date as the purported termination for cause.

42.2. District shall also have the right in its sole discretion to terminate the Contract and/or Contractor's right to perform the Work of the Contract for its own convenience upon District giving three (3) days' written notice thereof to the Contractor. In case of a termination for convenience, Contractor shall be paid for the actual cost for labor, materials, and services performed including, without limitation, Contractor's and its subcontractor(s)' mobilization and/or demobilization costs, that is unpaid and can be documented through timesheets, invoices, receipts, or otherwise. If Contractor objects to the termination for convenience, including disagreement on the actual cost, the District retains the right to all the options available to the District under a termination for cause.

42.3. Termination shall have no effect upon any of the rights and obligations of the parties arising out of any transaction occurring prior to the effective date of termination.

43. ASSIGNMENT OF CONTRACT: Contractor shall not assign or transfer in any way any or all of its rights, burdens, duties, or obligations under this Contract without the prior written consent of the District.

44. TIME IS OF THE ESSENCE: Time is of the essence in the performance of and compliance with each of the provisions and conditions of this Contract.

45. CALCULATION OF TIME: For the purposes of this Contract, "days" refers to calendar days unless otherwise specified.

46. GOVERNING LAW: This Contract shall be governed by and construed in accordance with the laws of the State of California with venue of any action in a County in which the District administration office is located.

47. BINDING CONTRACT: This Contract shall be binding upon the parties hereto and upon their successors and assigns, and shall inure to the benefit of said parties and their successors and assigns.

48. DISTRICT WAIVER: District's waiver of any term, condition, covenant or waiver of a breach of any term, condition or covenant shall not constitute the waiver of any other term, condition or covenant or the waiver of a breach of any other term, condition or covenant.

49. CAPTIONS AND INTERPRETATIONS: Paragraph headings in this Contract are used solely for convenience, and shall be wholly disregarded in the construction of this Contract. No provision of this Contract shall be interpreted for or against a party because that party or its legal representative drafted such provision, and this Contract shall be construed as if jointly prepared by the parties.

50. INVALID TERM: If any provision of this Contract is declared or determined by any court of competent jurisdiction to be illegal, invalid or unenforceable, the legality, validity or enforceability of the

remaining parts, terms and provisions shall not be affected thereby, and said illegal, unenforceable or invalid part, term or provision will be deemed not to be a part of this Contract.

51. PROVISIONS REQUIRED BY LAW DEEMED INSERTED: Each and every provision of law and clause required by law to be inserted in this Contract shall be deemed to be inserted herein and this Contract shall be read and enforced as though it were included therein.

52. ENTIRE CONTRACT: This Contract sets forth the entire agreement between the parties hereto and fully supersedes any and all prior agreements, understandings, written or oral, between the parties hereto pertaining to the subject matter thereof.

53. NO ORAL MODIFICATIONS: No oral agreement or conversation with any officer, agent, or employee of District, either before or after execution of Contract, shall affect or modify any of the terms or obligations contained in any of the documents comprising the Contract.

[REMAINDER OF PAGE LEFT BLANK INTENTIONALLY]

Public Contract Code section 9204

(a) The Legislature finds and declares that it is in the best interests of the state and its citizens to ensure that all construction business performed on a public works project in the state that is complete and not in dispute is paid in full and in a timely manner.

(b) Notwithstanding any other law, including, but not limited to, Article 7.1 (commencing with Section 10940) of Chapter 1 of Part 2, Chapter 10 (commencing with Section 19100) of Part 2, and Article 1.5 (commencing with Section 20104) of Chapter 1 of Part 3, this section shall apply to any claim by a contractor in connection with a public works project.

(c) For purposes of this section:

(1) "Claim" means a separate demand by a contractor sent by registered mail or certified mail with return receipt requested, for one or more of the following:

(A) A time extension, including, without limitation, for relief from damages or penalties for delay assessed by a public entity under a contract for a public works project.

(B) Payment by the public entity of money or damages arising from work done by, or on behalf of, the contractor pursuant to the contract for a public works project and payment for which is not otherwise expressly provided or to which the claimant is not otherwise entitled.

(C) Payment of an amount that is disputed by the public entity.

(2) "Contractor" means any type of contractor within the meaning of Chapter 9 (commencing with Section 7000) of Division 3 of the Business and Professions Code who has entered into a direct contract with a public entity for a public works project.

(3) (A) "Public entity" means, without limitation, except as provided in subparagraph (B), a state agency, department, office, division, bureau, board, or commission, the California State University, the University of California, a city, including a charter city, county, including a charter county, city and county, including a charter city and county, district, special district, public authority, political subdivision, public corporation, or nonprofit transit corporation wholly owned by a public agency and formed to carry out the purposes of the public agency.

(B) "Public entity" shall not include the following:

(i) The Department of Water Resources as to any project under the jurisdiction of that department.

(ii) The Department of Transportation as to any project under the jurisdiction of that department.

(iii) The Department of Parks and Recreation as to any project under the jurisdiction of that department.

(iv) The Department of Corrections and Rehabilitation with respect to any project under its jurisdiction pursuant to Chapter 11 (commencing with Section 7000) of Title 7 of Part 3 of the Penal Code.

(v) The Military Department as to any project under the jurisdiction of that department.

(vi) The Department of General Services as to all other projects.

(vii) The High-Speed Rail Authority.

(4) "Public works project" means the erection, construction, alteration, repair, or improvement of any public structure, building, road, or other public improvement of any kind.

(5) "Subcontractor" means any type of contractor within the meaning of Chapter 9 (commencing with Section 7000) of Division 3 of the Business and Professions Code who either is in direct contract with a contractor or is a lower tier subcontractor.

(d) (1) (A) Upon receipt of a claim pursuant to this section, the public entity to which the claim applies shall conduct a reasonable review of the claim and, within a period not to exceed 45 days, shall provide the claimant a written statement identifying what portion of the claim is disputed and what portion is undisputed. Upon receipt of a claim, a public entity and a contractor may, by mutual agreement, extend the time period provided in this subdivision.

(B) The claimant shall furnish reasonable documentation to support the claim.

(C) If the public entity needs approval from its governing body to provide the claimant a written statement identifying the disputed portion and the undisputed portion of the claim, and the governing body does not meet within the 45 days or within the mutually agreed to extension of time following receipt of a claim sent by registered mail or certified mail, return receipt requested, the public entity shall have up to three days following the next duly publicly noticed meeting of the governing body after the 45-day period, or extension, expires to provide the claimant a written statement identifying the disputed portion and the undisputed portion.

(D) Any payment due on an undisputed portion of the claim shall be processed and made within 60 days after the public entity issues its written statement. If the public entity fails to issue a written statement, paragraph (3) shall apply.

(2) (A) If the claimant disputes the public entity's written response, or if the public entity fails to respond to a claim issued pursuant to this section within the time prescribed, the claimant may demand in writing an informal conference to meet and confer for settlement of the issues in dispute. Upon receipt of a demand in writing sent by registered mail or certified mail, return receipt requested, the public entity shall schedule a meet and confer conference within 30 days for settlement of the dispute.

(B) Within 10 business days following the conclusion of the meet and confer conference, if the claim or any portion of the claim remains in dispute, the public entity shall provide the claimant a written statement identifying the portion of the claim that remains in dispute and the portion that is undisputed. Any payment due on an undisputed portion of the claim shall be processed and made within 60 days after the public entity issues its written statement. Any disputed portion of the claim, as identified by the contractor in writing, shall be submitted to nonbinding mediation, with the public entity and the claimant sharing the associated costs equally. The public entity and claimant shall mutually agree to a mediator within 10 business days after the disputed portion of the claim has been identified in writing. If the parties cannot agree upon a mediator, each party shall select a mediator and those mediators shall select a qualified neutral third party to mediate with regard to the disputed portion of the claim. Each party shall bear the fees and costs charged by its respective mediator in connection with the selection of the neutral mediator. If mediation is unsuccessful, the parts of the claim remaining in dispute shall be subject to applicable procedures outside this section.

(C) For purposes of this section, mediation includes any nonbinding process, including, but not limited to, neutral evaluation or a dispute review board, in which an independent third party or board assists the parties in dispute resolution through negotiation or by issuance of an evaluation. Any mediation utilized shall conform to the timeframes in this section.

(D) Unless otherwise agreed to by the public entity and the contractor in writing, the mediation conducted pursuant to this section shall excuse any further obligation under Section 20104.4 to mediate after litigation has been commenced.

(E) This section does not preclude a public entity from requiring arbitration of disputes under private arbitration or the Public Works Contract Arbitration Program, if mediation under this section does not resolve the parties' dispute.

(3) Failure by the public entity to respond to a claim from a contractor within the time periods described in this subdivision or to otherwise meet the time requirements of this section shall result in the claim being deemed rejected in its entirety. A claim that is denied by reason of the public entity's failure to have responded to a claim, or its failure to otherwise meet the time requirements of this section, shall not constitute an adverse finding with regard to the merits of the claim or the responsibility or qualifications of the claimant.

(4) Amounts not paid in a timely manner as required by this section shall bear interest at 7 percent per annum.

(5) If a subcontractor or a lower tier subcontractor lacks legal standing to assert a claim against a public entity because privity of contract does not exist, the contractor may present to the public entity a claim on behalf of a subcontractor or lower tier subcontractor. A subcontractor may request in writing, either on their own behalf or on behalf of a lower tier subcontractor, that the contractor present a claim for work which was performed by the subcontractor or by a lower tier subcontractor on behalf of the subcontractor. The subcontractor requesting that the claim be presented to the public entity shall furnish reasonable documentation to support the claim. Within 45 days of receipt of this written request, the contractor shall notify the subcontractor in writing as to whether the contractor presented the claim to the public entity and, if the original contractor did not present the claim, provide the subcontractor with a statement of the reasons for not having done so.

(e) The text of this section or a summary of it shall be set forth in the plans or specifications for any public works project that may give rise to a claim under this section.

(f) A waiver of the rights granted by this section is void and contrary to public policy, provided, however, that (1) upon receipt of a claim, the parties may mutually agree to waive, in writing, mediation and proceed directly to the commencement of a civil action or binding arbitration, as applicable; and (2) a public entity may prescribe reasonable change order, claim, and dispute resolution procedures and requirements in addition to the provisions of this section, so long as the contractual provisions do not conflict with or otherwise impair the timeframes and procedures set forth in this section.

(g) This section applies to contracts entered into on or after January 1, 2017.

(h) Nothing in this section shall impose liability upon a public entity that makes loans or grants available through a competitive application process, for the failure of an awardee to meet its contractual obligations.

(i) This section shall remain in effect only until January 1, 2027, and as of that date is repealed, unless a later enacted statute that is enacted before January 1, 2027, deletes or extends that date.

Public Contract Code sections 20104 – 20104.6

§ 20104.

(a) (1) This article applies to all public works claims of three hundred seventy-five thousand dollars ($375,000) or less which arise between a contractor and a local agency.

(2) This article shall not apply to any claims resulting from a contract between a contractor and a public agency when the public agency has elected to resolve any disputes pursuant to Article 7.1 (commencing with Section 10940) of Chapter 1 of Part 2.

(b) (1) "Public work" means "public works contract" as defined in Section 1101 but does not include any work or improvement contracted for by the state or the Regents of the University of California.

(2) "Claim" means a separate demand by the contractor for (A) a time extension, (B) payment of money or damages arising from work done by, or on behalf of, the contractor pursuant to the contract for a public work and payment of which is not otherwise expressly provided for or the claimant is not otherwise entitled to, or (C) an amount the payment of which is disputed by the local agency.

(c) The provisions of this article or a summary thereof shall be set forth in the plans or specifications for any work which may give rise to a claim under this article.

(d) This article applies only to contracts entered into on or after January 1, 1991.

§ 20104.2.

For any claim subject to this article, the following requirements apply:

(a) The claim shall be in writing and include the documents necessary to substantiate the claim. Claims must be filed on or before the date of final payment. Nothing in this subdivision is intended to extend the time limit or supersede notice requirements otherwise provided by contract for the filing of claims.

(b) (1) For claims of less than fifty thousand dollars ($50,000), the local agency shall respond in writing to any written claim within 45 days of receipt of the claim, or may request, in writing, within 30 days of receipt of the claim, any additional documentation supporting the claim or relating to defenses to the claim the local agency may have against the claimant.

(2) If additional information is thereafter required, it shall be requested and provided pursuant to this subdivision, upon mutual agreement of the local agency and the claimant.

(3) The local agency's written response to the claim, as further documented, shall be submitted to the claimant within 15 days after receipt of the further documentation or within a period of time no greater than that taken by the claimant in producing the additional information, whichever is greater.

(c) (1) For claims of over fifty thousand dollars ($50,000) and less than or equal to three hundred seventy-five thousand dollars ($375,000), the local agency shall respond in writing to all written claims within 60 days of receipt of the claim, or may request, in writing, within 30 days of receipt of the claim, any additional documentation supporting the claim or relating to defenses to the claim the local agency may have against the claimant.

(2) If additional information is thereafter required, it shall be requested and provided pursuant to this subdivision, upon mutual agreement of the local agency and the claimant.

(3) The local agency's written response to the claim, as further documented, shall be submitted to the claimant within 30 days after receipt of the further documentation, or within a period of time no greater than that taken by the claimant in producing the additional information or requested documentation, whichever is greater.

(d) If the claimant disputes the local agency's written response, or the local agency fails to respond within the time prescribed, the claimant may so notify the local agency, in writing, either within 15 days of receipt of the local agency's response or within 15 days of the local agency's failure to respond within the time prescribed, respectively, and demand an informal conference to meet and confer for settlement of the issues in dispute. Upon a demand, the local agency shall schedule a meet and confer conference within 30 days for settlement of the dispute.

(e) Following the meet and confer conference, if the claim or any portion remains in dispute, the claimant may file a claim as provided in Chapter 1 (commencing with Section 900) and Chapter 2 (commencing with Section 910) of Part 3 of Division 3.6 of Title 1 of the Government Code. For purposes of those provisions, the running of the period of time within which a claim must be filed shall be tolled from the time the claimant submits his or her written claim pursuant to subdivision (a) until the time that claim is denied as a result of the meet and confer process, including any period of time utilized by the meet and confer process.

(f) This article does not apply to tort claims and nothing in this article is intended nor shall be construed to change the time periods for filing tort claims or actions specified by Chapter 1 (commencing with Section 900) and Chapter 2 (commencing with Section 910) of Part 3 of Division 3.6 of Title 1 of the Government Code.

§ 20104.4.

The following procedures are established for all civil actions filed to resolve claims subject to this article:

(a) Within 60 days, but no earlier than 30 days, following the filing or responsive pleadings, the court shall submit the matter to nonbinding mediation unless waived by mutual stipulation of both parties. The mediation process shall provide for the selection within 15 days by both parties of a disinterested third person as mediator, shall be commenced within 30 days of the submittal, and shall be concluded within 15 days from the commencement of the mediation unless a time requirement is extended upon a good cause showing to the court or by stipulation of both parties. If the parties fail to select a mediator within the 15-day period, any party may petition the court to appoint the mediator.

(b) (1) If the matter remains in dispute, the case shall be submitted to judicial arbitration pursuant to Chapter 2.5 (commencing with Section 1141.10) of Title 3 of Part 3 of the Code of Civil Procedure, notwithstanding Section 1141.11 of that code. The Civil Discovery Act (Title 4 (commencing with Section 2016.010) of Part 4 of the Code of Civil Procedure) shall apply to any proceeding brought under this subdivision consistent with the rules pertaining to judicial arbitration.

(2) Notwithstanding any other provision of law, upon stipulation of the parties, arbitrators appointed for purposes of this article shall be experienced in construction law, and, upon stipulation of the parties, mediators and arbitrators shall be paid necessary and reasonable hourly rates of pay not to exceed their customary rate, and such fees and expenses shall be paid equally by the parties, except in the case of arbitration where the arbitrator, for good cause, determines a different division. In no event shall these fees or expenses be paid by state or county funds.

(3) In addition to Chapter 2.5 (commencing with Section 1141.10) of Title 3 of Part 3 of the Code of Civil Procedure, any party who after receiving an arbitration award requests a trial de novo but does not obtain a more favorable judgment shall, in addition to payment of costs and fees under that chapter, pay the attorney's fees of the other party arising out of the trial de novo.

(c) The court may, upon request by any party, order any witnesses to participate in the mediation or arbitration process.

§ 20104.6.

(a) No local agency shall fail to pay money as to any portion of a claim which is undisputed except as otherwise provided in the contract.

(b) In any suit filed under Section 20104.4, the local agency shall pay interest at the legal rate on any arbitration award or judgment. The interest shall begin to accrue on the date the suit is filed in a court of law.

EXHIBIT "A"

SCOPE OF WORK

Contractor's entire Proposal is **not** made part of this Agreement.

TAMALPAIS UNION HIGH
SCHOOL DISTRICT

NOTICE TO PROCEED (NTP)

Contractor: **NAME**
Address Line 1
Adress Line 2

Project: **Tamalpais High School Pool Replastering Project – BID No. 109**

You are hereby notified to commence work in accordance with the signed Agreement dated **Date of Award***,* between Tamalpais Union High School District (TUHSD) and **Contractor Name** on or before ***Date to Proceed.*** In accordance with this signed Agreement, the official contract time and project completion is **Number of calendar days for the Work (60)** ***consecutive calendar days*** from the date of this NTP (**NTP Date**); all project work must be completed by **Final Date**.

You must submit the following documents within 10 calendar days following the NTP:

a. Contractor's preliminary Schedule of Construction;
b. Contractor's preliminary Schedule of Values for all of the Work;
c. Contractor's preliminary Schedule of Submittals, including Shop Drawings, Product Data and Samples submittals;
d. Contractor's Safety Plan specifically adapted for this Project;
e. Registered Subcontractor's List – a complete subcontractors list for all tiers, including the name, Department of Industrial Relations registration number and portion of work.

You are required to return an acknowledged copy of this **NTP** to the District. Please send either a hardcopy to TUHSD, attention Mike Woolard (Sr. Director of Facilities Planning) to *333 Doherty Drive, Larkspur, CA 94939.*

or scan/e-mail a copy electronically to mwoolard@tamdistrict.org.

Dated: Date

By: _____
Mike Woolard
Sr. Director of Facilities Planning

Receipt of this Notice to Proceed is hereby acknowledged by **Contractor Name:**

_____ _____
Authorized Company Representative Date

_____
Title

DOCUMENT 00 61 13.13

PERFORMANCE BOND
(100% of Contract Price)

(Note: Contractor must use this form, NOT a surety company form.)

KNOW ALL PERSONS BY THESE PRESENTS:

WHEREAS, the governing board ("Board") of the Tamalpais Union High School District, ("District") and _____("Principal") have entered into a contract for the furnishing of all materials and labor, services and transportation, necessary, convenient, and proper to perform the following project:

Tamalpais High School Pool Replastering Project

("Project" or "Contract") which Contract dated _____, 2026, and all of the Contract Documents attached to or forming a part of the Contract, are hereby referred to and made a part hereof; and

WHEREAS, said Principal is required under the terms of the Contract to furnish a bond for the faithful performance of the Contract.

NOW, THEREFORE, the Principal and _____
_____("Surety") are held and firmly bound unto the Board of the District in the penal sum of

_____

Dollars ($_____), lawful money of the United States, for the payment of which sum well and truly to be made we bind ourselves, our heirs, executors, administrators, successors, and assigns jointly and severally, firmly by these presents, to:

- Promptly perform all the work required to complete the Project; and
- Pay to the District all damages the District incurs as a result of the Principal's failure to perform all the Work required to complete the Project.

Or, at the District's sole discretion and election, the Surety shall obtain a bid or bids for completing the Contract in accordance with its terms and conditions, and upon determination by the District of the lowest responsible bidder, arrange for a contract between such bidder and the District and make available as Work progresses sufficient funds to pay the cost of completion less the "balance of the Contract Price," and to pay and perform all obligations of Principals under the Contract, including, without limitation, all obligations with respect to warranties, guarantees and the payment of liquidated damages. The term "balance of the Contract Price," as used in this paragraph, shall mean the total amount payable to Principal by the District under the Contract and any modifications thereto, less the amount previously paid by the District to the Principal, less any withholdings by the District allowed under the Contract. District shall not be required or obligated to accept a tender of a completion contractor from the Surety for any or no reason.

The condition of the obligation is such that, if the above bound Principal, its heirs, executors, administrators, successors, or assigns, shall in all things stand to and abide by, and well and truly keep and perform the covenants, conditions, and agreements in the Contract and any alteration

thereof made as therein provided, on its part to be kept and performed at the time and in the intent and meaning, including all contractual guarantees and warrantees of materials and workmanship, and shall indemnify and save harmless the District, its trustees, officers and agents, as therein stipulated, then this obligation shall become null and void, otherwise it shall be and remain in full force and virtue.

Surety expressly agrees that the District may reject any contractor or subcontractor proposed by Surety to fulfill its obligations in the event of default by the Principal. Surety shall not utilize Principal in completing the Work nor shall Surety accept a Bid from Principal for completion of the Work if the District declares the Principal to be in default and notifies Surety of the District's objection to Principal's further participation in the completion of the Work.

As a condition precedent to the satisfactory completion of the Contract, the above obligation shall hold good for a period equal to the warranty and/or guarantee period of the Contract, during which time Surety's obligation shall continue if Contractor shall fail to make full, complete, and satisfactory repair and replacements and totally protect the District from loss or damage resulting from or caused by defective materials or faulty workmanship. The obligations of Surety hereunder shall continue so long as any obligation of Contractor remains. Nothing herein shall limit the District's rights or the Contractor or Surety's obligations under the Contract, law or equity, including, but not limited to, California Code of Civil Procedure section 337.15.

The Surety, for value received, hereby stipulates and agrees that no change, extension of time, alteration, or addition to the terms of the contract or to the work to be performed thereunder or the specifications accompanying the same shall in any way affect its obligation on this bond. The Surety also stipulates and agrees that it shall not be exonerated or released from the obligation of this bond by any overpayment or underpayment by the District that is based upon estimates approved by the Architect. The Surety does hereby waive notice of any such change, extension of time, alteration, or addition to the terms of the Contract or to the work or to the specifications.

IN WITNESS WHEREOF, two (2) identical counterparts of this instrument, each of which shall for all purposes be deemed an original thereof, have been duly executed by the Principal and Surety above named, on the _____day of _____, 2026.

Principal	Surety
By	By
	Name of California Agent of Surety
	Address of California Agent of Surety
	Telephone No. of California Agent of Surety

Contractor must attach a Notarial Acknowledgment for all Surety's signatures and a Power of Attorney and Certificate of Authority for Surety. The California Department of Insurance must authorize the Surety to be an admitted surety insurer.

END OF DOCUMENT

DOCUMENT 00 61 13.16

PAYMENT BOND
Contractor's Labor & Material Bond
(100% Of Contract Price)

(Note: Contractor must use this form, NOT a surety company form.)

KNOW ALL PERSONS BY THESE PRESENTS:

WHEREAS, the governing board ("Board") of the Tamalpais Union High School District, ("District") and _____, ("Principal") have entered into a contract for the furnishing of all materials and labor, services and

Tamalpais High School Pool Replastering Project

("Project" or "Contract") which Contract dated _____, 2026, and all of the Contract Documents attached to or forming a part of the Contract, are hereby referred to and made a part hereof; and

WHEREAS, pursuant to law and the Contract, the Principal is required, before entering upon the performance of the work, to file a good and sufficient bond with the body by which the Contract is awarded in an amount equal to one hundred percent (100%) of the Contract price, to secure the claims to which reference is made in sections 9000 through 9510 and 9550 through 9566 of the Civil Code, and division 2, part 7, of the Labor Code.

NOW, THEREFORE, the Principal and_____
_____("Surety")
are held and firmly bound unto all laborers, material men, and other persons referred to in said statutes in the sum of _____
Dollars ($_____), lawful money of the United States, being a sum not less than the total amount payable by the terms of Contract, for the payment of which sum well and truly to be made, we bind ourselves, our heirs, executors, administrators, successors, or assigns, jointly and severally, by these presents.

The condition of this obligation is that if the Principal or any of its subcontractors, or their heirs, executors, administrators, successors, or assigns of any, all, or either of them shall fail to pay for any labor, materials, provisions, or other supplies, used in, upon, for or about the performance of the work contracted to be done, or for any work or labor thereon of any kind, or for amounts required to be deducted, withheld, and paid over to the Employment Development Department from the wages of employees of the Principal or any of his or its subcontractors of any tier under Section 13020 of the Unemployment Insurance Code with respect to such work or labor, that the Surety will pay the same in an amount not exceeding the amount herein above set forth, and also in case suit is brought upon this bond, will pay a reasonable attorney's fee to be awarded and fixed by the court, and to be taxed as costs and to be included in the judgment therein rendered.

It is hereby expressly stipulated and agreed that this bond shall inure to the benefit of any and all persons, companies, and corporations entitled to file claims under section 9109 of the Civil Code, so as to give a right of action to them or their assigns in any suit brought upon this bond.

Should the condition of this bond be fully performed, then this obligation shall become null and void; otherwise it shall be and remain in full force and affect.

And the Surety, for value received, hereby stipulates and agrees that no change, extension of time, alteration, or addition to the terms of Contract or the specifications accompanying the same shall in any manner affect its obligations on this bond, and it does hereby waive notice of any such change, extension, alteration, or addition.

IN WITNESS WHEREOF, two (2) identical counterparts of this instrument, each of which shall for all purposes be deemed an original thereof, have been duly executed by the Principal and Surety above named, on the _____day of _____, 2026.

Principal	Surety
By	By
	Name of California Agent of Surety
	Address of California Agent of Surety
	Telephone No. of California Agent of Surety

Contractor must attach a Notarial Acknowledgment for all Surety's signatures and a Power of Attorney and Certificate of Authority for Surety. The California Department of Insurance must authorize the Surety to be an admitted surety insurer.

END OF DOCUMENT

DOCUMENT 00 63 57

PROPOSED CHANGE ORDER FORM

Tamalpais Union High School District
333 Doherty Drive
Larkspur, CA 94939

PCO NO.:

Project: _____
Bid No.: _____
RFI #:_____

Date: _____
DSA File No.: _____
DSA Appl. No.:_____

Contractor hereby submits for District's review and evaluation this Proposed Change Order ("PCO"), submitted in accordance with and subject to the terms of the Contract Documents, including Sections 17.7 and 17.8 of the General Conditions. Any spaces left blank below are deemed no change to cost or time.

Contractor understands and acknowledges that documentation supporting Contractor's PCO must be attached and included for District review and evaluation. Contractor further understands and acknowledges that failure to include documentation sufficient to, in District's discretion, support some or all of the PCO, shall result in a rejected PCO.

	WORK PERFORMED OTHER THAN BY CONTRACTOR	**ADD**	**DEDUCT**
(a)	**Material** (attach suppliers' invoice or itemized quantity and unit cost plus sales tax)		
(b)	**Add Labor** (attach itemized hours and rates, fully Burdened, and specify the hourly rate for each additional labor burden, for example, payroll taxes, fringe benefits, etc.)		
(c)	**Add Equipment** (attach suppliers' invoice)		
(d)	**Subtotal**		
(e)	**Add overhead and profit for any and all tiers of Subcontractor**, the total not to exceed ten percent (10%) of Item (d)		
(f)	**Subtotal**		
(g)	**Add General Conditions** (if Time is Compensable) (attach supporting documentation)		
(h)	**Subtotal**		
(i)	**Add Overhead and Profit for Contractor**, not to exceed five percent (5%) of Item (h)		
(j)	**Subtotal**		
(k)	**Add Bond and Insurance**, not to exceed two and one-half percent (2.5%) of Item (j)		
(l)	**TOTAL**		
(m)	**Time** (zero unless indicated; "TBD" not permitted)	_____**Calendar Days**	

[REMAINDER OF PAGE LEFT BLANK INTENTIONALLY]

	WORK PERFORMED BY CONTRACTOR	**ADD**	**DEDUCT**
(a)	**Material** (attach itemized quantity and unit cost plus sales tax)		
(b)	**Add Labor** (attach itemized hours and rates, fully Burdened, and specify the hourly rate for each additional labor burden, for example, payroll taxes, fringe benefits, etc.)		
(c)	**Add Equipment** (attach suppliers' invoice)		
(d)	**Add General Conditions** (if Time is Compensable) (attach supporting documentation)		
(e)	**Subtotal**		
(f)	**Add Overhead and Profit for Contractor**, not to exceed fifteen percent (15%) of Item (e)		
(g)	**Subtotal**		
(h)	**Add Bond and Insurance**, not to exceed two and one-half percent (2.5%) of Item (g)		
(i)	**TOTAL**		
(j)	**Time** (zero unless indicated; "TBD" not permitted)	**_____Calendar Days**	

The undersigned Contractor approves the foregoing as to the changes, if any, to the Contract Price specified for each item, and as to the extension of time allowed, if any, for completion of the entire Work as stated herein, and agrees to furnish all labor, materials, and service, and perform all work necessary to complete any additional work specified for the consideration stated herein. Submission of sums which have no basis in fact or which Contractor knows are false are at the sole risk of Contractor and may be a violation of the False Claims Act set forth under Government Code section 12650 et seq. It is understood that the changes herein to the Contract shall only be effective when approved by the governing board of the District.

It is expressly understood that the value of the extra Work or changes expressly includes any and all of the Contractor's costs and expenses, direct and indirect, resulting from additional time required on the Project or resulting from delay to the Project including, without limitation, cumulative impacts. Contractor is not entitled to separately recover amounts for overhead or other indirect costs. Any costs, expenses, damages, or time extensions not included are deemed waived.

SUBMITTED BY:

Contractor:

_____ _____

[Name] Date

END OF DOCUMENT

DOCUMENT 00 63 63

CHANGE ORDER FORM

Tamalpais Union High School District
333 Doherty Drive
Larkspur, CA 94939

CHANGE ORDER NO.:

CHANGE ORDER

Project: _____
Bid No.: _____

Date: _____
DSA File No.: _____
DSA Appl. No.:_____

The following parties agree to the terms of this Change Order:

Owner: _____
[Name / Address]
_____
_____

Contractor: _____
[Name / Address]
_____
_____

Architect: _____
[Name / Address]
_____
_____

Project Inspector: _____
[Name / Address]
_____
_____

Reference	**Description**	**Cost**	**Days Ext.**
PCO # Requested by: Performed by: Reason:	[Description of change] [Requester] [Performer] [Reason]	$	
PCO # Requested by: Performed by: Reason:	[Description of change] [Requester] [Performer] [Reason]	$	
PCO # Requested by: Performed by: Reason:	[Description of change] [Requester] [Performer] [Reason]	$	

Contract time will be adjusted as follows: Previous Completion Date: [Date] _____[#] Calendar Days Extension (zero unless otherwise indicated) Current Completion Date: [Date]	Original Contract Amount:	$
	Amount of Previously Approved Change Order(s):	$
	Amount of this Change Order:	$
	Contract Amount:	$

The undersigned Contractor approves the foregoing as to the changes, if any, to the Contract Price specified for each item, and as to the extension of time allowed, if any, for completion of the entire work as stated therein, and agrees to furnish all labor, materials and services and perform all work necessary to complete any additional work specified for the consideration stated therein. Submission of sums which have no basis in fact or which Contractor knows are false are at the sole risk of Contractor and may be a violation of the False Claims Act set forth under Government Code section 12650 et seq.

This change order is subject to approval by the governing board of this District and must be signed by the District. Until such time as this change order is approved by the District's governing board and executed by a duly authorized District representative, this change order is not effective and not binding.

It is expressly understood that the compensation and time, if any, granted herein represent a full accord and satisfaction for any and all time and cost impacts of the items herein, and Contractor waives any and all further compensation or time extension based on the items herein. The value of the extra work or changes expressly includes any and all of the Contractor's costs and expenses, and its subcontractors, both direct and indirect, resulting from additional time required on the project or resulting from delay to the project including without limitation, cumulative impacts. Any costs, expenses, damages or time extensions not included are deemed waived.

Signatures:

District:		Contractor:	
_____	_____	_____	_____
[Name]	Date	[Name]	Date
Architect:		Project Inspector:	
_____	_____	_____	_____
[Name]	Date	[Name]	Date

END OF DOCUMENT

DOCUMENT 00 65 19.26

AGREEMENT AND RELEASE OF ANY AND ALL CLAIMS

THIS AGREEMENT AND RELEASE OF CLAIMS ("Agreement and Release") IS MADE AND ENTERED INTO THIS _____DAY OF _____, 2026 by and between the TAMALPAIS UNION HIGH SCHOOL DISTRICT ("District") and _____ _____("Contractor"), whose place of business is _____ _____.

RECITALS

WHEREAS, District and Contractor entered into BID NO.: 109 ("Contract" or "Project") in the County of Marin, California; and

WHEREAS, the Work under the Contract was completed on _____, and a Notice of Completion was recorded with the County Recorder on _____.

NOW, THEREFORE, it is mutually agreed between District and Contractor as follows:

AGREEMENT AND RELEASE

1. Contractor will only be assessed liquidated damages as detailed below:

Original Contract Sum	$_____
Modified Contract Sum	$_____
Payment to Date	$_____
Liquidated Damages	$_____
Payment Due Contractor	$_____

2. Subject to the provisions hereof, District shall forthwith pay to Contractor the undisputed sum of _____Dollars ($_____) under the Contract, less any amounts represented by any notice to withhold funds on file with District as of the date of such payment.

3. Contractor acknowledges and hereby agrees that there are no unresolved or outstanding claims in dispute against District arising from the performance of work under the Contract, except for the claims described in Paragraph 4 and continuing obligations described in Paragraph 6. It is the intention of the parties in executing this Agreement and Release that this Agreement and Release shall be effective as a full, final and general release of all claims, demands, actions, causes of action, obligations, costs, expenses, damages, losses and liabilities of Contractor against District and all of its respective agents, employees, trustees, inspectors, assignees, consultants and transferees, except for any Disputed Claim that may be set forth in Paragraph 4 and the continuing obligations described in Paragraph 6 hereof.

4. The following claims are disputed (hereinafter, the "Disputed Claims") and are specifically excluded from the operation of this Agreement and Release:

Claim No.	Description of Claim	Amount of Claim	Date Claim Submitted
_____	_____	$_____	_____
_____	_____	$_____	_____
_____	_____	$_____	_____
_____	_____	$_____	_____
_____	_____	$_____	_____
_____	_____	$_____	_____

[If further space is required, attach additional sheets showing the required information.]

5. Consistent with California Public Contract Code section 7109, Contractor hereby agrees that, in consideration of the payment set forth in Paragraph 2 hereof, Contractor hereby releases and forever discharges District, all its agents, employees, inspectors, assignees, and transferees from any and all liability, claims, demands, actions, or causes of action of whatever kind or nature arising out of or in any way concerned with the Work under the Contract.

6. Guarantees and warranties for the Work, and any other continuing obligation of Contractor, including without limitation, the duty to defend, indemnify and hold harmless the District, shall remain in full force and effect as specified in the Contract Documents.

7. Contractor hereby waives the provisions of California Civil Code section 1542 which provides as follows:

> A GENERAL RELEASE DOES NOT EXTEND TO CLAIMS THAT THE CREDITOR OR RELEASING PARTY DOES NOT KNOW OR SUSPECT TO EXIST IN HIS OR HER FAVOR AT THE TIME OF EXECUTING THE RELEASE AND THAT, IF KNOWN BY HIM OR HER, WOULD HAVE MATERIALLY AFFECTED HIS OR HER SETTLEMENT WITH THE DEBTOR OR RELEASED PARTY.

8. The provisions of this Agreement and Release are contractual in nature and not mere recitals and shall be considered independent and severable. If any such provision or any part thereof shall be at any time held invalid in whole or in part under any federal, state, county, municipal, or other law, ruling, or regulations, then such provision, or part thereof, shall remain in force and effect to the extent permitted by law, and the remaining provisions of this Agreement and Release shall also remain in full force and effect, and shall be enforceable.

9. All rights of District shall survive completion of the Work or termination of Contract, and execution of this Release.

* * * CAUTION: THIS IS A RELEASE - READ BEFORE EXECUTING * * *

TAMALPAIS UNION HIGH SCHOOL DISTRICT

Signature: _____

Print Name: _____

Title: _____

CONTRACTOR: _____

Signature: _____

Print Name: _____

Title: _____

END OF DOCUMENT

DOCUMENT 00 65 36

GUARANTEE FORM

_____("Contractor") hereby agrees that the _____ _____("Work" of Contractor) which Contractor has installed for the Tamalpais Union High School District ("District") for the following project:

PROJECT: **Tamalpais High School Pool Replastering Project**

("Project" or "Contract") has been performed in accordance with the requirements of the Contract Documents and that the Work as installed will fulfill the requirements of the Contract Documents.

The undersigned agrees to repair or replace any or all of such Work that may prove to be defective in workmanship or material together with any other adjacent Work that may be displaced in connection with such replacement within a period of _____ year(s) from the date of completion as defined in Public Contract Code section 7107, subdivision (c), ordinary wear and tear and unusual abuse or neglect excepted. The date of completion is _____, 20___.

In the event of the undersigned's failure to comply with the above-mentioned conditions within a reasonable period of time, as determined by the District, but not later than seven (7) days after being notified in writing by the District, the undersigned authorizes the District to proceed to have said defects repaired and made good at the expense of the undersigned. The undersigned shall pay the costs and charges therefor upon demand.

Date: _____

Proper Name of Contractor: _____

Signature: _____

Print Name: _____

Title: _____

Representatives to be contacted for service subject to terms of Contract:

Name: _____

Address: _____

Phone No.: _____

Email: _____

END OF DOCUMENT

DOCUMENT 00 72 13

TABLE OF CONTENTS

Page

1. CONTRACT TERMS AND DEFINITIONS 1
   - 1.1 Definitions 1
   - 1.2 Laws Concerning the Contract; Venue 7
   - 1.3 No Oral Agreements 7
   - 1.4 No Assignment 7
   - 1.5 Notice and Service Thereof 7
   - 1.6 No Waiver 8
   - 1.7 Substitutions for Specified Items 8
   - 1.8 Materials and Work 8
2. [RESERVED] 10
3. ARCHITECT 10
4. CONSTRUCTION MANAGER 10
5. INSPECTOR, INSPECTIONS, AND TESTS 11
   - 5.1 Project Inspector 11
   - 5.2 Tests and Inspections 11
   - 5.3 Costs for After Hours and/or Off Site Inspections 12
6. CONTRACTOR 12
   - 6.1 Status of Contractor 12
   - 6.2 Project Inspection Card(s) 13
   - 6.3 Contractor's Supervision 13
   - 6.4 Duty to Provide Fit Workers 14
   - 6.5 Purchase of Materials and Equipment 15
   - 6.6 Documents on Work 15

6.7 Preservation of Records 16
6.8 Integration of Work 16
6.9 Notifications 17
6.10 Obtaining of Permits, Licenses and Registrations 17
6.11 Royalties and Patents 18
6.12 Work to Comply With Applicable Laws and Regulations 18
6.13 Safety/Protection of Persons and Property 19
6.14 Working Evenings and Weekends 22
6.15 Cleaning Up 22
6.16 No Relief from Obligations Based on Review by Other Persons 23
7. SUBCONTRACTORS 23
8. OTHER CONTRACTS/CONTRACTORS 24
9. DRAWINGS AND SPECIFICATIONS 25
10. CONTRACTOR'S SUBMITTALS AND SCHEDULES 26
10.1 Schedule of Work, Schedule of Submittals, and Schedule of Values 26
10.2 Monthly Progress Schedule(s) 29
10.3 Material Safety Data Sheets (MSDS) 30
10.4 Submittals 30
11. SITE ACCESS, CONDITIONS, AND REQUIREMENTS 30
11.1 Site Investigation 30
11.2 Soils Investigation Report 31
11.3 Access to Work 31
11.4 Layout and Field Engineering 31
11.5 Utilities 32
11.6 Sanitary Facilities 32
11.7 Surveys 32
11.8 Regional Notification Center 32

11.9 Existing Utility Lines 32
11.10 Notification 33
11.11 Hazardous Materials 33
11.12 No Signs 33
12. TRENCHES 33
12.1 Trenches Greater Than Five Feet 33
12.2 Excavation Safety 33
12.3 No Tort Liability of District 34
12.4 No Excavation without Permits 34
12.5 Discovery of Hazardous Waste and/or Unusual Conditions 34
13. INSURANCE AND BONDS 35
13.1 Insurance 35
13.2 Contract Security - Bonds 40
14. WARRANTY/GUARANTEE/INDEMNITY 40
14.1 Warranty/Guarantee 40
14.2 Indemnity and Defense 41
15. TIME 43
15.1 Notice to Proceed 43
15.2 Computation of Time / Adverse Weather 43
15.3 Hours of Work 44
15.4 Progress and Completion 44
15.5 Schedule 45
15.6 Expeditious Completion 45
16. EXTENSIONS OF TIME – LIQUIDATED DAMAGES 45
16.1 Liquidated Damages 45
16.2 Excusable Delay 45
16.3 No Additional Compensation for Delays Within Contractor's Control 47

16.4 Force Majeure 48
16.5 Float or Slack in the Schedule 48
17. CHANGES IN THE WORK 48
17.1 No Changes Without Authorization 48
17.2 Architect Authority 49
17.3 Price Request 50
17.4 Change Orders 50
17.5 Proposed Change Order 50
17.7 Change Order Certification 56
17.8 Determination of Change Order Cost 57
17.9 Deductive Change Orders 57
17.10 Addition or Deletion of Alternate Bid Item(s) 57
17.11 Discounts, Rebates, and Refunds 57
17.12 Construction Change Directives 58
17.13 Force Account Directives 58
17.14 Accounting Records 59
17.15 Notice Required 59
17.16 Applicability to Subcontractors 59
17.17 Alteration to Change Order Language 60
17.18 Failure of Contractor to Execute Change Order 60
18. REQUEST FOR INFORMATION 60
19. PAYMENTS 60
19.1 Contract Price 60
19.2 Applications for Progress Payments 60
19.3 Progress Payments 63
19.4 Decisions to Withhold Payment 65
19.5 Subcontractor Payments 67

20. COMPLETION OF THE WORK 68

20.1 Completion 68

20.2 Close-Out/Certification Procedures 68

20.3 Final Inspection 70

20.4 Costs of Multiple Inspections 71

20.5 Partial Occupancy or Use Prior to Completion 71

21. FINAL PAYMENT AND RETENTION 72

21.1 Final Payment 72

21.2 Prerequisites for Final Payment 72

21.3 Retention 73

21.4 Substitution of Securities 73

22. UNCOVERING OF WORK 74

23. NONCONFORMING WORK AND CORRECTION OF WORK 74

23.1 Nonconforming Work 74

23.2 Correction of Work 74

23.3 District's Right to Perform Work 75

24. TERMINATION AND SUSPENSION 75

24.1 District’s Request for Assurances 75

24.2 District's Right to Terminate Contractor for Cause 75

24.3 Termination of Contractor for Convenience 78

24.4 Effect of Termination 78

24.5 Emergency Termination of Public Contracts Act of 1949 79

24.6 Suspension of Work 79

25. CLAIMS PROCESS 80

25.1 Obligation to File Claims for Disputes 80

25.2 Duty to Perform during Claim Process 80

25.3 Definition of Claim 80

25.4 Claims Presentation 81

25.5 Claim Resolution pursuant to Public Contract Code section 9204 82

25.6 Subcontractor Pass-Through Claims 84

25.7 Government Code Claim Act Claim 84

25.8 Claim Resolution pursuant to Public Contract Code section 20104 et seq 84

25.9 Claim Procedure Compliance 86

25.10 Claim Resolution Non-Applicability 86

25.11 Attorney's Fees 87

26. STATE LABOR, WAGE & HOUR, APPRENTICE, AND RELATED PROVISIONS 87

26.1 Labor Compliance and Enforcement 87

26.2 Wage Rates, Travel, and Subsistence 87

26.3 Hours of Work 88

26.4 Payroll Records 89

26.5 [RESERVED] 90

26.6 Apprentices 90

26.7 Non-Discrimination 92

26.8 Labor First Aid 92

27. [RESERVED] 92

28. MISCELLANEOUS 92

28.1 Assignment of Antitrust Actions 92

28.2 Excise Taxes 93

28.3 Taxes 93

28.4 Shipments 93

28.5 Compliance with Government Reporting Requirements 93

DOCUMENT 00 72 13

GENERAL CONDITIONS

1. CONTRACT TERMS AND DEFINITIONS

1.1 Definitions

Wherever used in the Contract Documents, the following terms shall have the meanings indicated, which shall be applicable to both the singular and plural thereof:

1.1.1 Adverse Weather: Shall be only weather that satisfies all of the following conditions: (1) unusually severe precipitation, sleet, snow, hail, or extreme temperature conditions in excess of the norm for the location and time of year it occurred based on the closest weather station data averaged over the past five years, (2) that is unanticipated and would cause unsafe work conditions and/or is unsuitable for scheduled work that should not be performed during inclement weather (i.e., exterior finishes), and (3) at the Project.

1.1.2 Allowance(s): The Allowance Item(s) identified in the Bid Form and Proposal and included in the Contract Price. Any unused portion of the Allowance will revert to the District documented by a deductive Change Order. Contractor hereby authorizes the District to execute a unilateral deductive Change Order at or near the end of the Project for all or any portion of the Allowance not allocated.

1.1.3 Allowance Expenditure Directive: Written authorization for expenditure of an Allowance, if any. Contractor shall not bill for or be due any portion of an Allowance unless the District has identified specific work, Contractor has submitted a price for that work or the District has proposed a price for that work, the District has accepted the cost for that work, and the District has executed an Allowance Expenditure Directive incorporating that work.

1.1.4 Approval, Approved, and/or Accepted: Written authorization, unless stated otherwise.

1.1.5 Architect (or "Design Professional in General Responsible Charge"): The individual, partnership, corporation, joint venture, or any combination thereof, named as Architect, who will have the rights and authority assigned to the Architect in the Contract Documents. The term Architect means the Design Professional in General Responsible Charge as defined in DSA PR 13-02 on this Project or the Architect's authorized representative.

1.1.6 As-Builts: Reproducible blue line prints of drawings to be prepared on a monthly basis pursuant to the Contract Documents, that reflect changes made during the performance of the Work, recording differences between the original design of the Work and the Work as constructed since the preceding monthly submittal. See **Record Drawings**.

1.1.7 Bidder: A contractor who intends to provide a proposal to the District to perform the Work of this Contract.

1.1.8 Burdened: The labor rate for Contractor or any Subcontractor inclusive of any and all burden costs including, but not limited to, health and welfare pay, vacation and holiday pay, pension contributions, training rates, benefits of any kind, insurance of any kind, workers' compensation, liability insurance, truck expenses, supply expenses of any kind, payroll taxes, and any other taxes of any kind.

1.1.9 Change Order: A written order to the Contractor authorizing an addition to, deletion from, or revision in the Work, and/or authorizing an adjustment in the Contract Price or Contract Time.

1.1.10 Claim: A Contractor Claim within the meaning of Public Contract Code sections 9204 and/or 20104 et seq.

1.1.11 Construction Change Directive: A written order prepared and issued by the District, the Construction Manager, and/or the Architect and signed by the District and the Architect, directing a change in the Work.

1.1.12 Construction Manager: The individual, partnership, corporation, joint venture, or any combination thereof, or its authorized representative, named as such by the District. If no Construction Manager is used on the Project that is the subject of this Contract, then all references to Construction Manager herein shall be read to refer to District.

1.1.13 Construction Schedule: The progress schedule of construction of the Project as provided by Contractor and approved by District.

1.1.14 Contract, Contract Documents: The Contract consists exclusively of the documents evidencing the agreement of the District and Contractor, identified as the Contract Documents. The Contract Documents consist of the following documents:

1.1.14.1 Notice to Bidders
1.1.14.2 Instructions to Bidders
1.1.14.3 Bid Form and Proposal
1.1.14.4 Bid Bond
1.1.14.5 Designated Subcontractors List
1.1.14.6 Site Visit Certification (if a site visit was required)
1.1.14.7 Non-Collusion Declaration
1.1.14.8 Off-Road Diesel-Fueled Fleet Certification (if applicable)
1.1.14.9 Notice of Award
1.1.14.10 Notice to Proceed
1.1.14.11 Agreement
1.1.14.12 Escrow of Bid Documentation
1.1.14.13 Escrow Agreement for Security Deposits in Lieu of Retention (if applicable)
1.1.14.14 Performance Bond
1.1.14.15 Payment Bond (Contractor's Labor & Material Bond)
1.1.14.16 General Conditions
1.1.14.17 Special Conditions (if applicable)
1.1.14.18 Project Labor Agreement (if applicable)
1.1.14.19 Hazardous Materials Procedures and Requirements
1.1.14.20 Workers' Compensation Certification

1.1.14.21 Prevailing Wage Certification
1.1.14.22 Disabled Veteran Business Enterprise Participation Certification (if applicable)
1.1.14.23 Drug-Free Workplace Certification (if applicable)
1.1.14.24 Tobacco-Free Environment Certification (if applicable)
1.1.14.25 Workplace Violence Prevention Plan Certification
1.1.14.26 Drug and Alcohol-Free Schools Certification (if applicable)
1.1.14.27 Hazardous Materials Certification (if applicable)
1.1.14.28 Lead-Based Materials Certification (if applicable)
1.1.14.29 Imported Materials Certification (if applicable)
1.1.14.30 Criminal Background Investigation/Fingerprinting Certification
1.1.14.31 Roofing Project Certification (if applicable)
1.1.14.32 Registered Subcontractors List
1.1.14.33 Iran Contracting Act Certification (if applicable)
1.1.14.34 Federal Debarment Certification (if applicable)
1.1.14.35 Federal Byrd Anti-Lobbying Certification (if applicable)
1.1.14.36 Post Bid Interview (if used)
1.1.14.37 All Plans, Technical Specifications, and Drawings
1.1.14.38 Any and all addenda to any of the above documents
1.1.14.39 Any and all change orders or written modifications to the above documents if approved in writing by the District

1.1.15 Contract Price: The total monies payable to the Contractor under the terms and conditions of the Contract Documents.

1.1.16 Contract Time: The time period stated in the Agreement for the completion of the Work.

1.1.17 Contractor: The person or persons identified in the Agreement as contracting to perform the Work to be done under this Contract, or the legal representative of such a person or persons.

1.1.18 Daily Job Report(s): Daily Project reports prepared by the Contractor's employee(s) who are present on Site, which shall include the information required herein.

1.1.19 Day(s): Unless otherwise designated, day(s) means calendar day(s).

1.1.20 Department of Industrial Relations (or "DIR"): is responsible, among other things, for labor compliance monitoring and enforcement of California prevailing wage laws and regulations for public works contracts.

1.1.21 Design Professional in General Responsible Charge: See definition of **Architect** above.

1.1.22 Dispute: A separate demand by Contractor for a time extension, or payment of money or damages arising from Work done by or on behalf of the Contractor pursuant to the Contract and payment of which is not otherwise expressly provided for or Contractor is not otherwise entitled to; or an amount of payment disputed by the District.

1.1.23 District: The public agency or the school district for which the Work is performed. The governing board of the District or its designees will act for the District in all matters pertaining to the Contract. The District may, at any time,

1.1.23.1 Direct the Contractor to communicate with or provide notice to the Construction Manager or the Architect on matters for which the Contract Documents indicate the Contractor will communicate with or provide notice to the District; and/or

1.1.23.2 Direct the Construction Manager or the Architect to communicate with or direct the Contractor on matters for which the Contract Documents indicate the District will communicate with or direct the Contractor.

1.1.24 Drawings (or "Plans"): The graphic and pictorial portions of the Contract Documents showing the design, location, scope and dimensions of the work, generally including plans, elevations, sections, details, schedules, sequence of operation, and diagrams.

1.1.25 DSA: Division of the State Architect.

1.1.26 Force Account Directive: A process that may be used when the District and the Contractor cannot agree on a price for a specific portion of work or before the Contractor prepares a price for a specific portion of work and whereby the Contractor performs the work as indicated herein on a time and materials basis.

1.1.27 Job Cost Reports: Any and all reports or records detailing the costs associated with work performed on or related to the Project that Contractor shall maintain for the Project. Specifically, Job Cost Reports shall contain, but are not limited by or to, the following information: a description of the work performed or to be performed on the Project; quantity, if applicable, of work performed (hours, square feet, cubic yards, pounds, etc.) for the Project; Project budget; costs for the Project to date; estimated costs to complete the Project; and expected costs at completion. The Job Cost Reports shall also reflect all Contract cost codes, change orders, elements of non-conforming work, back charges, and additional services.

1.1.28 Labor Commissioner's Office (or "Labor Commissioner", also known as the Division of Labor Standards Enforcement ("DLSE")): Division of the DIR responsible for adjudicating wage claims, investigating discrimination and public works complaints, and enforcing Labor Code statutes and Industrial Welfare Commission orders.

1.1.29 Municipal Separate Storm Sewer System (or "MS4"): A system of conveyances used to collect and/or convey storm water, including, without limitation, catch basins, curbs, gutters, ditches, man-made channels, and storm drains.

1.1.30 Plans: See **Drawings**.

1.1.31 Premises: The real property owned by the District on which the Site is located.

1.1.32 Product(s): New material, machinery, components, equipment, fixtures and systems forming the Work, including existing materials or components required and approved by the District for reuse.

1.1.33 Product Data: Illustrations, standard schedules, performance charts, instructions, brochures, diagrams, and other information furnished by the Contractor to illustrate a material, product, or system for some portion of the Work.

1.1.34 Program Manager: The individual, partnership, corporation, joint venture, or any combination thereof, or its authorized representative, named as such by the District. If no Program Manager is designated for Project that is the subject of this Contract, then all references to Program Manager herein shall be read to refer to District.

1.1.35 Project: The planned undertaking as provided for in the Contract Documents.

1.1.36 Project Inspector (or "Inspector"): The individual(s) retained by the District in accordance with title 24 of the California Code of Regulations to monitor and inspect the Project.

1.1.37 Project Labor Agreement (or "PLA"): a prehire collective bargaining agreement in accordance with Public Contract Code section 2500 et seq. that establishes terms and conditions of employment for a specific construction project or projects and/or is an agreement described in Section 158(f) of Title 29 of the United States Code.

1.1.38 Proposed Change Order (or "PCO"): a written request prepared by the Contractor requesting that the District and the Architect issue a Change Order based upon a proposed change to the Work.

1.1.39 Provide: Shall include "provide complete in place," that is, "furnish and install," and "provide complete and functioning as intended in place" unless specifically stated otherwise.

1.1.40 Qualified SWPPP Practitioners (or "QSP"): certified personnel that attended a State Water Resources Control Board sponsored or approved training class and passed the qualifying exam.

1.1.41 Record Drawings: Reproducible drawings (or Plans) prepared pursuant to the requirements of the Contract Documents that reflect all changes made during the performance of the Work, recording differences between the original design of the Work and the Work as constructed upon completion of the Project. See also **As-Builts**.

1.1.42 Request for Information (or "RFI"): A written request prepared by the Contractor requesting that the Architect provide additional information necessary to clarify or amplify an item in the Contract Documents that the Contractor believes is not clearly shown or called for in the Drawings or Specifications or other portions of the Contract Documents, or to address problems that have arisen under field conditions.

1.1.43 Request for Substitution for Specified Item: A request by Contractor to substitute an equal or superior material, product, thing, or service for a specific material, product, thing, or service that has been designated in the Contract Documents by a specific brand or trade name.

1.1.44 Safety Orders: Written and/or verbal orders for construction issued by the California Division of Occupational Safety and Health ("CalOSHA") or by the United States Occupational Safety and Health Administration ("OSHA").

1.1.45 Safety Plan: Contractor's safety plan specifically adapted for the Project. Contractor's Safety Plan shall comply with all provisions regarding Project safety, including all applicable provisions in these General Conditions.

1.1.46 Samples: Physical examples that illustrate materials, products, equipment, finishes, colors, or workmanship and that, when approved in accordance with the Contract Documents, establish standards by which portions of the Work will be judged.

1.1.47 Shop Drawings: All drawings, prints, diagrams, illustrations, brochures, schedules, and other data that are prepared by the Contractor, a subcontractor, manufacturer, supplier, or distributor, that illustrate how specific portions of the Work shall be fabricated or installed.

1.1.48 Site: The Project site as shown on the Drawings.

1.1.49 Specifications: That portion of the Contract Documents, Division 1 through Division 49, and all technical sections, and addenda to all of these, if any, consisting of written descriptions and requirements of a technical nature of materials, equipment, construction methods and systems, standards, and workmanship.

1.1.50 State: The State of California.

1.1.51 Storm Water Pollution Prevention Plan (or "SWPPP"): A document which identifies sources and activities at a particular facility that may contribute pollutants to storm water and contains specific control measures and time frames to prevent or treat such pollutants.

1.1.52 Subcontractor: A contractor and/or supplier who is under contract with the Contractor or with any other subcontractor, regardless of tier, to perform a portion of the Work of the Project.

1.1.53 Submittal Schedule: The schedule of submittals as provided by Contractor and approved by District.

1.1.54 Surety: The person, firm, or corporation that executes as surety the Contractor's Performance Bond and Payment Bond, and must be a California admitted surety insurer as defined in the Code of Civil Procedure section 995.120.

1.1.55 Work: All labor, materials, equipment, components, appliances, supervision, coordination, and services required by, or reasonably inferred from, the Contract Documents, that are necessary for the construction and completion of the Project.

1.2 Laws Concerning the Contract; Venue

Contract is subject to all provisions of the Constitution and laws of California and the United States governing, controlling, or affecting District, or the property, funds, operations, or powers of District, and such provisions are by this reference made a part hereof. Any provision required by law to be included in this Contract shall be deemed to be inserted.

To the fullest extent permitted by California law, any action or proceeding that may be brought, or arise out of, in connection with or by reason of this Contract shall exclusively be litigated in the State of California and the county in which the District administration office is located shall be the venue for such litigation.

1.3 No Oral Agreements

No oral agreement or conversation with any officer, agent, or employee of District, either before or after execution of Contract, shall affect or modify any of the terms or obligations contained in any of the documents comprising the Contract.

1.4 No Assignment

Contractor shall not assign this Contract or any part thereof including, without limitation, any Work or money to become due hereunder without the prior written consent of the District. Assignment without District's prior written consent shall be null and void. Any assignment of money due or to become due under this Contract shall be subject to a prior lien for services rendered or material supplied for performance of work called for under this Contract in favor of all persons, firms, or corporations rendering services or supplying material to the extent that claims are filed pursuant to the Civil Code, Code of Civil Procedure, Government Code, Labor Code, and/or Public Contract Code, and shall also be subject to deductions for liquidated damages or withholding of payments as determined by District in accordance with this Contract. Contractor shall not assign or transfer in any manner to a Subcontractor or supplier the right to prosecute or maintain an action against the District.

1.5 Notice and Service Thereof

1.5.1 Any notice from one party to the other or otherwise under Contract shall be in writing and shall be dated and signed by the party giving notice or by a duly authorized representative of that party. Any notice shall not be effective for any purpose whatsoever unless served in one of the following manners:

1.5.1.1 If notice is given by personal delivery thereof, it shall be considered delivered on the day of delivery.

1.5.1.2 If notice is given by overnight delivery service, it shall be considered delivered one (1) day after date deposited, as indicated by the delivery service.

1.5.1.3 If notice is given by depositing same in United States mail, enclosed in a sealed envelope, it shall be considered delivered three (3) days after date deposited, as indicated by the postmarked date.

1.5.1.4 If notice is given by registered or certified mail with postage prepaid, return receipt requested, it shall be considered delivered on the day the notice is signed for.

1.5.1.5 Electronic mail may be used for convenience but is not a substitute for the notice and service requirements herein.

1.6 No Waiver

The failure of District in any one or more instances to insist upon strict performance of any of the terms of this Contract or to exercise any option herein conferred shall not be construed as a waiver or relinquishment to any extent of the right to assert or rely upon any such terms or option on any future occasion. No action or failure to act by the District, Architect, or Construction Manager shall constitute a waiver of any right or duty afforded the District under the Contract, nor shall any action or failure to act constitute an approval of or acquiescence in any breach thereunder, except as may be specifically agreed in writing.

1.7 Substitutions for Specified Items

Unless the Special Conditions contain different provisions, Contractor shall not substitute different items for any items identified in the Contract Documents without prior written approval of the District.

1.8 Materials and Work

1.8.1 Except as otherwise specifically stated in this Contract, Contractor shall provide and pay for all materials, labor, tools, equipment, transportation, supervision, temporary constructions of every nature, and all other services, management, and facilities of every nature whatsoever necessary to execute and complete this Contract, in a good and workmanlike manner, within the Contract Time.

1.8.2 Unless otherwise specified, all materials shall be new and of the best quality of their respective kinds and grades as noted or specified, workmanship shall be of good quality, and Contractor shall use all diligence to inform itself fully as to the required manufacturer's instructions and to comply therewith.

1.8.3 Materials shall be furnished in ample quantities and at such times as to insure uninterrupted progress of Work and shall be stored properly and protected from the elements, theft, vandalism, or other loss or damage as required.

1.8.4 For all materials and equipment specified or indicated in the Drawings, the Contractor shall provide all labor, materials, equipment, and services necessary for complete assemblies and complete working systems, functioning as intended. Incidental items not indicated on Drawings, nor mentioned in the Specifications, that can legitimately and reasonably be inferred to belong to the Work described, or be necessary in good practice to provide a complete assembly or system, shall be furnished as though itemized here in every detail. In all instances, material and equipment shall be installed in strict accordance with each manufacturer's most recent published recommendations and specifications.

1.8.5 Contractor shall, after award of Contract by District and after relevant submittals have been reviewed, place orders for materials and/or equipment as specified so that delivery of same may be made without delays to the Work. Contractor shall, upon five (5) days' demand from District, present documentary evidence showing that orders have been placed.

1.8.6 District reserves the right but has no obligation, in response to Contractor's neglect or failure in complying with the above instructions, to place orders for such materials and/or equipment as the District may deem advisable in order that the Work may be completed at the date specified in the Contract, and all expenses incidental to the procuring of said materials and/or equipment shall be paid for by Contractor or deducted from payment(s) to Contractor.

1.8.7 Contractor warrants good title to all material, supplies, and equipment installed or incorporated in Work and agrees upon completion of all Work to deliver the Site to District, together with all improvements and appurtenances constructed or placed thereon by it, and free from any claims, liens, or charges. Contractor further agrees that neither it nor any person, firm, or corporation furnishing any materials or labor for any work covered by the Contract shall have any right to lien any portion of the Premises or any improvement or appurtenance thereon, except that Contractor may install metering devices or other equipment of utility companies or of political subdivision, title to which is commonly retained by utility company or political subdivision. In the event of installation of any such metering device or equipment, Contractor shall advise District as to owner thereof.

1.8.7.1 If a lien or a claim based on a stop payment notice of any nature should at any time be filed against the Work or any District property, by any entity that has supplied material or services at the request of the Contractor, Contractor and Contractor's Surety shall promptly, on demand by District and at Contractor's and Surety's own expense, take any and all action necessary to cause any such lien or a claim based on a stop payment notice to be released or discharged immediately therefrom.

1.8.7.2 If the Contractor fails to furnish to the District within ten (10) calendar days after demand by the District, satisfactory evidence that a lien or a claim based on a stop payment notice has been so released, discharged, or secured, the District may discharge such indebtedness and deduct the amount required therefor, together with any and all losses, costs, damages, and attorney's fees and expense incurred or suffered by District from any sum payable to Contractor under the Contract.

1.8.8 Nothing contained in this Article, however, shall defeat or impair the rights of persons furnishing materials or labor under any bond given by Contractor for their protection or any rights under any law permitting such protection or any rights under any law permitting such persons to look to funds due Contractor in hands of District (e.g., stop payment notices), and this provision shall be inserted in all subcontracts and material contracts and notice of its provisions shall be given to all persons furnishing material for work when no formal contract is entered into for such material.

1.8.9 Title to new materials and/or equipment for the Work of this Contract and attendant liability for its protection and safety shall remain with Contractor until

incorporated in the Work of this Contract and accepted by District. No part of any materials and/or equipment shall be removed from its place of storage except for immediate installation in the Work of this Contract. Should the District, in its discretion, allow the Contractor to store materials and/or equipment for the Work off-site, Contractor will store said materials and/or equipment at a bonded warehouse and with appropriate insurance coverage at no cost to District. Contractor shall keep an accurate inventory of all materials and/or equipment in a manner satisfactory to District or its authorized representative and shall, at the District's request, forward it to the District.

1.8.10 [RESERVED]

2. [RESERVED]

3. ARCHITECT

3.1 The Architect shall represent the District during the Project and will observe the progress and quality of the Work on behalf of the District. Architect shall have the authority to act on behalf of District to the extent expressly provided in the Contract Documents and to the extent determined by District. Architect shall have authority to reject materials, workmanship, and/or the Work whenever rejection may be necessary, in Architect's reasonable opinion, to ensure the proper execution of the Contract.

3.2 Architect shall, with the District and on behalf of the District, determine the amount, quality, acceptability, and fitness of all parts of the Work, and interpret the Specifications, Drawings, and shall, with the District, interpret all other Contract Documents.

3.3 Architect shall have all authority and responsibility established by law, including title 24 of the California Code of Regulations.

3.4 Contractor shall provide District and the Construction Manager with a copy of all written communication between Contractor and Architect at the same time as that communication is made to Architect, including, without limitation, all RFIs, correspondence, submittals, claims, and proposed change orders.

4. CONSTRUCTION MANAGER

4.1 If a Construction Manager is used on this Project ("Construction Manager" or "CM"), the Construction Manager will provide administration of the Contract on the District's behalf. After execution of the Contract and Notice to Proceed, all correspondence and/or instructions from Contractor and/or District shall be forwarded through the Construction Manager. The Construction Manager will not be responsible for and will not have control or charge of construction means, methods, techniques, sequences, or procedures or for safety precautions in connection with the Work, which shall all remain the Contractor's responsibility.

4.2 The Construction Manager, however, will have authority to reject materials and/or workmanship not conforming to the Contract Documents, as determined by the District, the Architect, and/or the Project Inspector. The Construction Manager shall also have the authority to require special inspection or testing of any portion of the Work, whether it has been fabricated, installed, or fully completed. Any decision made by the

Construction Manager, in good faith, shall not give rise to any duty or responsibility of the Construction Manager to: the Contractor; any Subcontractor; the Contractor or Subcontractor's respective agents, employees; or other persons performing any of the Work. The Construction Manager shall have free access to any or all parts of Work at any time.

4.3 If the District does not use a Construction Manager on this Project, all references within the Contract Documents to Construction Manager or CM shall be read as District.

5. INSPECTOR, INSPECTIONS, AND TESTS

5.1 Project Inspector

5.1.1 One or more Project Inspector(s), including special Project Inspector(s), as required, will be assigned to the Work by District, in accordance with requirements of title 24, part 1, of the California Code of Regulations, to enforce the building code and monitor compliance with Plans and Specifications for the Project previously approved by the DSA. Duties of Project Inspector(s) are specifically defined in section 4-342 of said part 1 of title 24.

5.1.2 No Work shall be carried on except with the knowledge and under the inspection of the Project Inspector(s). The Project Inspector(s) shall have free access to any or all parts of Work at any time. Contractor shall furnish Project Inspector(s) reasonable opportunities for obtaining such information as may be necessary to keep Project Inspector(s) fully informed respecting progress and manner of work and character of materials, including, but not limited to, submission of form DSA 156 (or the most current version applicable at the time the Work is performed) to the Project Inspector at least 48 hours in advance of the commencement and completion of construction of each and every aspect of the Work. Forms are available on the DSA's website at: http://www.dgs.ca.gov/dsa/Forms.aspx. Inspection of Work shall not relieve Contractor from an obligation to fulfill this Contract. Project Inspector(s) and the DSA are authorized to suspend work whenever the Contractor and/or its Subcontractor(s) are not complying with the Contract Documents. Any work stoppage by the Project Inspector(s) and/or DSA shall be without liability to the District. Contractor shall instruct its Subcontractors and employees accordingly.

5.1.3 If Contractor and/or any Subcontractor requests that the Project Inspector(s) perform any inspection off-site, this shall only be done if it is allowable pursuant to applicable regulations and DSA approval, if the Project Inspector(s) agree to do so, and at the expense of the Contractor.

5.2 Tests and Inspections

5.2.1 Tests and Inspections shall comply with title 24, part 1, California Code of Regulations, group 1, article 5, section 4-335, and with the provisions of the Specifications.

5.2.2 The District will select an independent testing laboratory to conduct the tests. Selection of the materials required to be tested shall be by the laboratory or the District's representative and not by the Contractor. The Contractor shall notify

the District's representative a sufficient time in advance of its readiness for required observation or inspection.

5.2.3 The Contractor shall notify the District's representative a sufficient time in advance of the manufacture of material to be supplied under the Contract Documents, which must by terms of the Contract Documents be tested, in order that the District may arrange for the testing of same at the source of supply. This notice shall be provided, at a minimum, seventy-two (72) hours prior to the manufacture of the material that needs to be tested.

5.2.4 Any material shipped by the Contractor from the source of supply prior to having satisfactorily passed such testing and inspection or prior to the receipt of notice from said representative that such testing and inspection will not be required, shall not be incorporated into and/or onto the Project.

5.2.5 The District will select the testing laboratory and pay for the cost of all tests and inspections, excepting those inspections performed at Contractor's request and expense. Contractor shall reimburse the District for any and all laboratory costs or other testing costs for any materials found to be not in compliance with the Contract Documents. At the District's discretion, District may elect to deduct laboratory or other testing costs for noncompliant materials from the Contract Price, and such deduction shall not constitute a withholding.

5.3 Costs for After Hours and/or Off Site Inspections

If the Contractor performs Work outside the Inspector's regular working hours or requests the Inspector to perform inspections off Site, costs of any inspections required outside regular working hours or off Site shall be borne by the Contractor and may be invoiced to the Contractor by the District or the District may deduct those expenses from the next Progress Payment.

6. CONTRACTOR

Contractor shall construct and complete, in a good and workmanlike manner, the Work for the Contract Price including any adjustment(s) to the Contract Price pursuant to provisions herein regarding changes to the Contract Price. Except as otherwise noted, Contractor shall provide and pay for all labor, materials, equipment, permits (excluding DSA), fees, licenses, facilities, transportation, taxes, bonds and insurance, and services necessary for the proper execution and completion of the Work, except as indicated herein.

6.1 Status of Contractor

6.1.1 Contractor represents and warrants that Contractor is an independent contractor or business entity that is: (i) free from the control and direction of the District in connection with the performance of the Services, (ii) performing Services that are outside the usual course of the District's business, and (iii) customarily engaged in an independently established trade, occupation, or business of the same nature as that involved in the Services performed, District being interested only in the results obtained. Contractor understands and agrees that it and all of its employees and its Subcontractors shall not be considered officers, employees, agents, partner, or joint venture of the District, and are not entitled to benefits of any kind or nature normally provided employees of the District and/or to which

District's employees are normally entitled, including, but not limited to, State Unemployment Compensation or Worker's Compensation. Contractor shall assume full responsibility for payment of all federal, state, and local taxes or contributions, including unemployment insurance, social security, and income taxes with respect to Consultant's employees. Contractor is and shall at all times be wholly responsible for the manner in which it, its agents, and its Subcontractors perform the services required of it by the Contract Documents. Nothing herein contained shall be construed as creating the relationship of employer and employee, or principal and agent, between the District, or any of the District's employees or agents, and Contractor or any of Contractor's Subcontractors, agents or employees. District shall be permitted to monitor the Contractor's activities to determine compliance with the terms of this Contract.

6.1.2 As required by law, Contractor and all Subcontractors shall be properly licensed and regulated by the Contractors State License Board, 9821 Business Park Drive, Sacramento, California 95827, http://www.cslb.ca.gov.

6.1.3 As required by law, Contractor and all Subcontractors shall be properly registered as public works contractors by the Department of Industrial Relations at: https://efiling.dir.ca.gov/PWCR/ActionServlet?action=displayPWCRegistrationForm or current URL.

6.1.4 Contractor represents that Contractor and all Subcontractors shall not be presently debarred, suspended, proposed for disbarment, declared ineligible or excluded pursuant to either Labor Code section 1777.1 or Labor Code section 1777.7.

6.1.5 [RESERVED]

6.1.6 Contractor represents that it has no existing interest and will not acquire any interest, direct or indirect, which could conflict in any manner or degree with the performance of Work required under this Contract and that no person having any such interest shall be employed by Contractor.

6.1.7 [RESERVED]

6.1.8 If Contractor intends to make any change in the name or legal nature of the Contractor's entity, Contractor must first notify the District in writing prior to making any contemplated change. The District shall determine in writing if Contractor's intended change is permissible while performing this Contract.

6.2 Project Inspection Card(s)

Contractor shall verify that forms DSA 152 (or the current version applicable at the time the Work is performed) are issued for the Project prior to the commencement of construction.

6.3 Contractor's Supervision

6.3.1 During progress of the Work, Contractor shall keep on the Premises, and at all other locations where any Work related to the Contract is being performed, an experienced and competent project manager and construction superintendent who

are employees of the Contractor, to whom the District does not object and at least one of whom shall be fluent in English, written and verbal.

6.3.2 The project manager and construction superintendent shall both speak fluently the predominant language of the Contractor's employees.

6.3.3 Before commencing the Work herein, Contractor shall give written notice to District of the name of its project manager and construction superintendent. Neither the Contractor's project manager nor construction superintendent shall be changed except with prior written notice to District. If the Contractor's project manager and/or construction superintendent proves to be unsatisfactory to Contractor, or to District, any of the District's employees, agents, the Construction Manager, or the Architect, the unsatisfactory project manager and/or construction superintendent shall be replaced. However, Contractor shall notify District in writing before any change occurs, but no less than two (2) business days prior. Any replacement of the project manager and/or construction superintendent shall be made promptly and must be satisfactory to the District. The Contractor's project manager and construction superintendent shall each represent Contractor, and all directions given to Contractor's project manager and/or construction superintendent shall be as binding as if given to Contractor.

6.3.4 Contractor shall give efficient supervision to Work, using its best skill and attention. Contractor shall carefully study and compare all Contract Documents, Drawings, Specifications, and other instructions and shall at once report to District, Construction Manager, and Architect any error, inconsistency, or omission that Contractor or its employees and Subcontractors may discover, in writing, with a copy to District's Project Inspector(s). The Contractor shall have responsibility for discovery of errors, inconsistencies, or omissions.

6.4 <u>Duty to Provide Fit Workers</u>

6.4.1 Contractor and Subcontractor(s) shall at all times enforce strict discipline and good order among their employees and shall not employ or work any unfit person or anyone not skilled in work assigned to that person. It shall be the responsibility of Contractor to ensure compliance with this requirement. District may require Contractor to permanently remove unfit persons from Project Site.

6.4.2 Any person in the employ of Contractor or Subcontractor(s) whom District may deem incompetent or unfit shall be excluded from working on the Project and shall not again be employed on the Project except with the prior written consent of District.

6.4.3 The Contractor shall furnish labor that can work in harmony with all other elements of labor employed or to be employed in the Work.

6.4.4 **Fingerprinting.** Contractor shall comply with the provisions of Education Code section 45125.2 regarding the submission of employee fingerprints to the California Department of Justice and the completion of criminal background investigations of its employees, its subcontractor(s), and its subcontractors' employees. Contractor shall not permit any employee to have any contact with District pupils until such time as Contractor has verified in writing to the governing board of the District, (A) that such employee has not been convicted of a violent or

serious felony, as defined in Education Code section 45122.1 and/or (B) that the prohibition does not apply to an employee as provided by Education Code section 45125.1(e)(2) or (3). Contractor shall fully complete and perform all tasks required pursuant to the Criminal Background Investigation/ Fingerprinting Certification.

6.5 Purchase of Materials and Equipment

The Contractor is required to order, obtain, and store materials and equipment sufficiently in advance of its Work at no additional cost or advance payment from District to assure that there will be no delays.

6.6 Documents on Work

6.6.1 Contractor shall at all times keep on the Site, or at another location as the District may authorize in writing, one legible copy of all Contract Documents, including Addenda and Change Orders, and Titles 19 and 24 of the California Code of Regulations, the specified edition(s) of the Uniform Building Code, all approved Drawings, Plans, Schedules, and Specifications, and all codes and documents referred to in the Specifications, and made part thereof. These documents shall be kept in good order and available to District, Construction Manager, Architect, Architect's representatives, the Project Inspector(s), and all authorities having jurisdiction. Contractor shall be acquainted with and comply with the provisions of these titles as they relate to this Project. (See particularly the duties of Contractor, Title 24, Part 1, California Code of Regulations, section 4-343.) Contractor shall also be acquainted with and comply with all California Code of Regulations provisions relating to conditions on this Project, particularly Titles 8 and 17. Contractor shall coordinate with Architect and Construction Manager and shall submit its verified report(s) according to the requirements of Title 24.

6.6.2 Daily Job Reports.

6.6.2.1 Contractor shall maintain, at a minimum, at least one (1) set of Daily Job Reports on the Project. These must be prepared by the Contractor's employee(s) who are present on Site, and must include, at a minimum, the following information:

6.6.2.1.1 A brief description of all Work performed on that day.
6.6.2.1.2 A summary of all other pertinent events and/or occurrences on that day.
6.6.2.1.3 The weather conditions on that day.
6.6.2.1.4 A list of all Subcontractor(s) working on that day, including DIR registration numbers.
6.6.2.1.5 A list of each Contractor employee working on that day and the total hours worked for each employee.
6.6.2.1.6 A complete list of all equipment on Site that day, whether in use or not.
6.6.2.1.7 A complete list of all materials, supplies, and equipment delivered on that day.
6.6.2.1.8 A complete list of all inspections and tests performed on that day.

6.6.2.2 Each day Contractor shall provide a copy of the previous day's Daily Job Report to the District or the Construction Manager.

6.7 Preservation of Records

Contractor shall maintain, and District shall have the right to inspect, Contractor's financial records for the Project, including, without limitation, Job Cost Reports for the Project in compliance with the criteria set forth herein. The District shall have the right to examine and audit all Daily Job Reports or other Project records of Contractor's project manager(s), project superintendent(s), and/or project foreperson(s), all certified payroll records and/or related documents including, without limitation, Job Cost Reports, payroll, payment, timekeeping and tracking documents; all books, estimates, records, contracts, documents, bid documents, bid cost data, subcontract job cost reports, and other data of the Contractor, any Subcontractor, and/or supplier, including computations and projections related to bidding, negotiating, pricing, or performing the Work or Contract modification, in order to evaluate the accuracy, completeness, and currency of the cost, manpower, coordination, supervision, or pricing data at no additional cost to the District. These documents may be duplicative and/or be in addition to any Bid Documents held in escrow by the District. The Contractor shall make available at its office at all reasonable times the materials described in this paragraph for the examination, audit, or reproduction until three (3) years after final payment under this Contract. Notwithstanding the provisions above, Contractor shall provide any records requested by any governmental agency, if available, after the time set forth above.

6.8 Integration of Work

6.8.1 Contractor shall do all cutting, fitting, patching, and preparation of Work as required to make its several parts come together properly, to fit it to receive or be received by work of other contractors, and to coordinate tolerances to various pieces of work, showing upon, or reasonably implied by, the Drawings and Specifications for the completed structure, and shall conform them as District and/or Architect may direct.

6.8.2 Contractor shall make its own layout of lines and elevations and shall be responsible for the accuracy of both Contractor's and Subcontractors' work resulting therefrom.

6.8.3 Contractor and all Subcontractors shall take all field dimensions required in performance of the Work and shall verify all dimensions and conditions on the Site. All dimensions affecting proper fabrication and installation of all Work must be verified prior to fabrication by taking field measurements of the true conditions. If there are any discrepancies between dimensions in drawings and existing conditions which will affect the Work, Contractor shall bring such discrepancies to the attention of the District and Architect for adjustment before proceeding with the Work. In doing so, it is recognized that Contractor is not acting in the capacity of a licensed design professional, and that Contractor's examination is made in good faith to facilitate construction and does not create an affirmative responsibility of a design professional to detect errors, omissions or inconsistencies in the Contract Documents or to ascertain compliance with applicable laws, building codes or regulations. However, nothing in this provision shall abrogate Contractor's responsibilities for discovering and reporting any error, inconsistency, or omission pursuant to the Contract within the Contractor's standard of care including, without limitation, any

applicable laws, ordinance, rules, or regulations. Following receipt of written notice from Contractor, the District and/or Architect shall inform Contractor what action, if any, Contractor shall take with regard to such discrepancies.

6.8.4 All costs caused by noncompliant, defective, or delayed Work shall be borne by Contractor, inclusive of repair work. Schedule delays resulting from unauthorized work shall be Contractor's responsibility.

6.8.5 Contractor shall not endanger any work performed by it or anyone else by cutting, excavating, or otherwise altering work and shall not cut or alter work of any other contractor except with consent of District.

6.9 Notifications

6.9.1 Contractor shall notify the Architect and Project Inspector, in writing, of the commencement of construction of each and every aspect of the Work at least 48 hours in advance by submitting form DSA 156 (or the most current version applicable at the time the Work is performed) to the Project Inspector. Forms are available on the DSA's website at: http://www.dgs.ca.gov/dsa/Forms.aspx.

6.9.2 Contractor shall notify the Architect and Project Inspector, in writing, of the completion of construction of each and every aspect of the Work at least 48 hours in advance by submitting form DSA 156 (or current version) to the Project Inspector.

6.10 Obtaining of Permits, Licenses and Registrations

6.10.1 Contractor shall secure and pay for all permits (except DSA), licenses, registrations, approvals and certificates necessary for prosecution of Work, including but not limited to those listed in the Special Conditions, if any, before the date of the commencement of the Work or before the permits, licenses, registrations, approvals and certificates are legally required to continue the Work without interruption. The Contractor shall obtain and pay, only when legally required, for all licenses, registrations, approvals, permits, inspections, and inspection certificates required to be obtained from or issued by any authority having jurisdiction over any part of the Work included in the Contract. All final permits, licenses, registrations, approvals and certificates shall be delivered to District before demand is made for final payment.

6.10.2 General Permit For Storm Water Discharges Associated With Construction and Land Disturbance Activities.

6.10.2.1 Contractor acknowledges that all California school districts are obligated to develop and implement the following requirements for the discharge of storm water to surface waters from its construction and land disturbance activities pursuant to the Clean Water Act and Porter Cologne Water Quality Act. District has determined that the construction of this Project requires enrollment in the Construction Storm Water Permit. District has filed certain submittals referred to as Permit Registration Documents ("PRDS") with the Regional Water Control Board ("Storm Water Pollution Prevention Plan" or "SWPPP").

6.10.2.2 Contractor shall comply with any District SWPPP that is approved by the District and applicable to the Project, at no additional cost to the District. Contractor shall pay any fees and any penalties that may imposed by a regulatory agency for its non-compliance with the SWPPP during the course of Work.

6.10.2.3 Contractor shall provide a Qualified Storm Water Practitioner ("QSP") at no additional cost to the District, who shall perform on-site inspections and implement and monitor any and all SWPPP requirements applicable to the Project, including required visual observations, sampling, analysis, reporting and record keeping, including of Total Maximum Daily Loads ("TMDL") of pollutants and construction dewatering and discharge, and Best Management Practices ("BMPs").

6.11 Royalties and Patents

6.11.1 Contractor shall obtain and pay, only when legally required, all royalties and license fees necessary for prosecution of Work before the earlier of the date of the commencement of the Work or the date that the license is legally required to continue the Work without interruption. Contractor shall defend suits or claims of infringement of patent, copyright, or other rights and shall hold the District, the Architect, and the Construction Manager harmless and indemnify them from loss on account thereof except when a particular design, process, or make or model of product is required by the Contract Documents. However, if the Contractor has reason to believe that the required design, process, or product is an infringement of a patent or copyright, the Contractor shall indemnify and defend the District, Architect and Construction Manager against any loss or damage unless the Contractor promptly informs the District of its information.

6.11.2 The review by the District or Architect of any method of construction, invention, appliance, process, article, device, or material of any kind shall be only its adequacy for the Work and shall not approve use by the Contractor in violation of any patent or other rights of any person or entity.

6.12 Work to Comply With Applicable Laws and Regulations

6.12.1 Contractor shall give all notices and comply with the following specific laws, ordinances, rules, and regulations and all other applicable laws, ordinances, rules, and regulations bearing on conduct of Work as indicated and specified, including but not limited to the appropriate statutes and administrative code sections. If Contractor observes that Drawings and Specifications are at variance therewith, or should Contractor become aware of the development of conditions not covered by Contract Documents that may result in finished Work being at variance therewith, Contractor shall promptly notify District in writing and any changes deemed necessary by District shall be made as provided in Contract for changes in Work.

6.12.1.1 National Electrical Safety Code, U. S. Department of Commerce

6.12.1.2 National Board of Fire Underwriters' Regulations

6.12.1.3 International Building Code, latest addition, and the California Code of Regulations, title 24, and other amendments

6.12.1.4 Manual of Accident Prevention in Construction, latest edition, published by A.G.C. of America

6.12.1.5 Industrial Accident Commission's Safety Orders, State of California

6.12.1.6 Regulations of the State Fire Marshall (title 19, California Code of Regulations) and Pertinent Local Fire Safety Codes

6.12.1.7 Americans with Disabilities Act

6.12.1.8 Education Code of the State of California

6.12.1.9 Government Code of the State of California

6.12.1.10 Labor Code of the State of California, division 2, part 7, Public Works and Public Agencies

6.12.1.11 Public Contract Code of the State of California

6.12.1.12 California Art Preservation Act

6.12.1.13 U. S. Copyright Act

6.12.1.14 U. S. Visual Artists Rights Act

6.12.2 Contractor shall comply with all applicable mitigation measures, if any, adopted by any public agency with respect to this Project pursuant to the California Environmental Quality Act (Public Resources Code section 21090 et seq.).

6.12.3 If Contractor performs any Work that it knew, or through exercise of reasonable care should have known, to be contrary to any applicable laws, ordinance, rules, or regulations, Contractor shall bear all costs arising therefrom and arising from the correction of said Work.

6.12.4 Where Specifications or Drawings state that materials, processes, or procedures must be approved by the DSA, State Fire Marshall, or other body or agency, Contractor shall be responsible for satisfying requirements of such bodies or agencies applicable at the time the Work is performed, and as determined by those bodies or agencies.

6.12.5 [RESERVED]

6.13 Safety/Protection of Persons and Property

6.13.1 The Contractor will be solely and completely responsible for conditions of the Site, including safety of all persons and property during performance of the Work. This requirement will apply continuously and not be limited to normal working hours.

6.13.2 The wearing of hard hats will be mandatory at all times for all personnel on Site. Contractor shall supply sufficient hard hats to properly equip all employees and visitors.

6.13.3 Any construction review of the Contractor's performance is not intended to include review of the adequacy of the Contractor's safety measures in, on, or near the Site.

6.13.4 Implementation and maintenance of safety programs shall be the sole responsibility of the Contractor.

6.13.5 The Contractor shall furnish to the District a copy of the Contractor's safety plan within the time frame indicated in the Contract Documents and specifically adapted for the Project.

6.13.6 Contractor shall be responsible for all damages to persons or property that occur as a result of its fault or negligence in connection with the prosecution of this Contract and shall take all necessary measures and be responsible for the proper care and completion and final acceptance by District. All Work shall be solely at Contractor's risk with the exception of damage to the Work caused by "acts of God" as defined in Public Contract Code section 7105.

6.13.7 Contractor shall take, and require Subcontractors to take, all necessary precautions for safety of workers on the Project and shall comply with all applicable federal, state, local, and other safety laws, standards, orders, rules, regulations, and building codes to prevent accidents or injury to persons on, about, or adjacent to premises where Work is being performed and to provide a safe and healthful place of employment. Contractor shall furnish, erect, and properly maintain at all times, all necessary safety devices, safeguards, construction canopies, signs, nets, barriers, lights, and watchmen for protection of workers and the public and shall post danger signs warning against hazards created by such features in the course of construction.

6.13.8 Hazards Control – Contractor shall store volatile wastes in covered metal containers and remove them from the Site daily. Contractor shall prevent accumulation of wastes that create hazardous conditions. Contractor shall provide adequate ventilation during use of volatile or noxious substances.

6.13.9 Contractor shall designate a responsible member of its organization on the Project, whose duty shall be to post information regarding protection and obligations of workers and other notices required under occupational safety and health laws, to comply with reporting and other occupational safety requirements, and to protect the life, safety, and health of workers. Name and position of person so designated shall be reported to District by Contractor.

6.13.10 Contractor shall correct any violations of safety laws, rules, orders, standards, or regulations. Upon the issuance of a citation or notice of violation by the Division of Occupational Safety and Health, Contractor shall correct such violation promptly.

6.13.11 Contractor shall comply with any District storm water requirements that are approved by the District and applicable to the Project, at no additional cost to the District.

6.13.12 In an emergency affecting safety of life or of work or of adjoining property, Contractor, without special instruction or authorization, shall act, at its discretion, to prevent such threatened loss or injury. Any compensation claimed by Contractor on account of emergency work shall be determined by agreement.

6.13.13 All salvage materials will become the property of the Contractor and shall be removed from the Site unless otherwise called for in the Contract Documents. However, the District reserves the right to designate certain items of value that shall be turned over to the District unless otherwise directed by District.

6.13.14 All connections to public utilities and/or existing on-site services, including, without limitation, internet, phone and data connections, shall be made and maintained in such a manner as to not interfere with the continuing use of same by the District during the entire progress of the Work.

6.13.15 Contractor shall provide such heat, covering, and enclosures as are necessary to protect all Work, materials, equipment, appliances, and tools against damage by weather conditions, such as extreme heat, cold, rain, snow, dry winds, flooding, or dampness.

6.13.16 Contractor shall protect and preserve the Work from all damage or accident, providing any temporary roofs, window and door coverings, boxings, or other construction as required by the Architect. The Contractor shall be responsible for existing structures, walks, roads, trees, landscaping, and/or improvements in working areas; and shall provide adequate protection therefore. If temporary removal is necessary of any of the above items, or damage occurs due to the Work, the Contractor shall replace same at his expense with same kind, quality, and size of Work or item damaged. This shall include any adjoining property of the District and others.

6.13.17 Contractor shall take adequate precautions to protect existing roads, sidewalks, curbs, pavements, utilities, adjoining property, and structures (including, without limitation, protection from settlement or loss of lateral support), and to avoid damage thereto, and repair any damage thereto caused by construction operations.

6.13.18 Contractor shall confine apparatus, the storage of materials, and the operations of workers to limits indicated by law, ordinances, permits, or directions of Architect, and shall not interfere with the Work or unreasonably encumber Premises or overload any structure with materials. Contractor shall enforce all instructions of District and Architect regarding signs, advertising, fires, and smoking, and require that all workers comply with all regulations while on Project Site.

6.13.19 Contractor, Contractor's employees, Subcontractors, Subcontractors' employees, or any person associated with the Work shall conduct themselves in a manner appropriate for a school site. No verbal or physical contact with neighbors, students, and faculty, profanity, or inappropriate attire and/or logos, or behavior will be permitted. District may require Contractor to temporarily or permanently remove non-complying persons from Project Site.

6.13.20 Contractor shall take care to prevent disturbing or covering any survey markers, monuments, or other devices marking property boundaries or corners. If

such markers are disturbed, Contractor shall have a civil engineer, registered as a professional engineer in California, replace them at no cost to District.

6.13.21 In the event that the Contractor enters into any agreement with owners of any adjacent property to enter upon the adjacent property for the purpose of performing the Work, Contractor shall fully indemnify, defend, and hold harmless each person, entity, firm, or agency that owns or has any interest in adjacent property. The form and content of the agreement of indemnification shall be approved by the District prior to the commencement of any Work on or about the adjacent property. The Contractor shall also indemnify the District as provided in the indemnification provision herein. These provisions shall be in addition to any other requirements of the owners of the adjacent property.

6.14 Working Evenings and Weekends

Contractor may be required to work increased hours, evenings, and/or weekends at no additional cost to the District. Contractor shall give the District seventy-two (72) hours' notice prior to performing any evening and/or weekend work. Contractor shall perform all evening and/or weekend work only upon District's approval and in compliance with all applicable rules, regulations, laws, and local ordinances including, without limitation, all noise and light limitations. Contractor shall reimburse the District for any increased or additional Inspector charges as a result of Contractor's increased hours, or evening and/or weekend work.

6.15 Cleaning Up

6.15.1 The Contractor shall provide all services, labor, materials, and equipment necessary for protecting and securing the Work, all school occupants, furnishings, equipment, and building structure from damage until its completion and final acceptance by District. Dust barriers shall be provided to isolate dust and dirt from construction operations. At completion of the Work and portions thereof, Contractor shall clean to the original state any areas beyond the Work area that become dust laden as a result of the Work. The Contractor must erect the necessary warning signs and barricades to ensure the safety of all school occupants. The Contractor at all times must maintain good housekeeping practices to reduce the risk of fire damage and must make a fire extinguisher, fire blanket, and/or fire watch, as applicable, available at each location where cutting, braising, soldering, and/or welding is being performed or where there is an increased risk of fire.

6.15.2 Contractor at all times shall keep Premises, including property immediately adjacent thereto, free from debris such as waste, rubbish (including personal rubbish of workers, e.g., food wrappers, etc.), and excess materials and equipment caused by the Work. Contractor shall not leave debris under, in, or about the Premises (or surrounding property or neighborhood), but shall promptly remove same from the Premises on a daily basis. If Contractor fails to clean up, District may do so and the cost thereof shall be charged to Contractor. If Contract is for work on an existing facility, Contractor shall also perform specific clean-up on or about the Premises upon request by the District as it deems necessary for continued operations. Contractor shall comply with all related provisions of the Specifications.

6.15.3 If the Construction Manager, Architect, or District observes the accumulation of trash and debris, the District will give the Contractor a 24-hour written notice to mitigate the condition.

6.15.4 Should the Contractor fail to perform the required clean-up, or should the clean-up be deemed unsatisfactory by the District, the District may, at its sole discretion, then perform the clean-up. All cost associated with the clean-up work (including all travel, payroll burden, and costs for supervision) will be deducted from the Contract Price.

6.16 No Relief from Obligations Based on Review by Other Persons

6.16.1 Contractor shall not be relieved of obligations to perform the Work in accordance with the Contract Documents by act or omission of the District, Architect, Construction Manager, Project Inspector, or DSA or other entities having jurisdiction including, but not limited to, administration of the Contract, review of submittals, or by tests, observation, inspection, or permit/interconnection approvals.

7. SUBCONTRACTORS

7.1 Contractor shall provide the District with information for all Subcontracts as indicated in the Contractor's Submittals and Schedules Section herein.

7.2 No contractual relationship exists between the District and any Subcontractor, supplier, or sub-subcontractor by reason of this Contract.

7.3 Contractor agrees to bind every Subcontractor by terms of this Contract as far as those terms that are applicable to Subcontractor's work including, without limitation, all labor, wage & hour, apprentice and related provisions and requirements. If Contractor shall subcontract any part of this Contract, Contractor shall be as fully responsible to District for acts and omissions of any Subcontractor and of persons either directly or indirectly employed by any Subcontractor, including Subcontractor caused Project delays, as it is for acts and omissions of persons directly employed by Contractor. The divisions or sections of the Specifications and/or the arrangement of the drawings are not intended to control the Contractor in dividing the Work among Subcontractors or limit the work performed by any trade.

7.4 District's consent to, or approval of, or failure to object to, any Subcontractor under this Contract shall not in any way relieve Contractor of any obligations under this Contract and no such consent shall be deemed to waive any provisions of this Contract.

7.5 Contractor is directed to familiarize itself with sections 4109 through 4114 of the Public Contract Code of the State of California, as regards subletting and subcontracting, and to comply with all applicable requirements therein. In addition, Contractor is directed to familiarize itself with sections 1720 through 1861 of the Labor Code of the State of California, as regards the payment of prevailing wages and related issues, and to comply with all applicable requirements therein including, without limitation, section 1775 and the Contractor's and Subcontractors' obligations and liability for violations of prevailing wage law and other applicable laws.

7.6 No Contractor whose Bid is accepted shall, without consent of the awarding authority and in full compliance with section 4109 et seq. of the Public Contract Code,

including, without limitation, sections 4107, 4107.5, and 4109 of the Public Contract Code, and section 1771.1 of the Labor Code, either:

7.6.1 Substitute any person as a Subcontractor in place of the Subcontractor designated in the original Bid; or

7.6.2 Permit any Subcontract to be assigned or transferred, or allow any portion of the Work to be performed by anyone other than the original Subcontractor listed in the Bid; or

7.6.3 Sublet or subcontract any portion of the Work in excess of one-half of one percent (0.5%) of the Contractor's total bid as to which his original bid did not designate a Subcontractor.

7.7 The Contractor shall be responsible for the coordination of the trades, Subcontractors, sub-subcontractors, and material or equipment suppliers working on the Project.

7.7.1 If the Contract is valued at $1 million or more and uses, or plans to use, state bond funds, then Contractor is responsible for ensuring that first tier Subcontractors holding C-4, C-7, C-10, C-16, C-20, C-34, C-36, C-38, C-42, C-43, and/or C-46 licenses are prequalified by the District to work on the Project pursuant to Public Contract Code section 20111.6.

7.7.2 Contractor is responsible for ensuring that all Subcontractors are properly registered as public works contractors by the Department of Industrial Relations.

7.8 Contractor is solely responsible for settling any differences between the Contractor and its Subcontractor(s) or between Subcontractors.

7.9 Contractor must include in all of its subcontracts the assignment provisions as indicated in the Termination section of these General Conditions.

8. OTHER CONTRACTS/CONTRACTORS

8.1 District reserves the right to let other contracts, and/or to perform work with its own forces, in connection with the Project. Contractor shall afford other contractors reasonable opportunity for introduction and storage of their materials and execution of their work and shall properly coordinate and connect Contractor's Work with the work of other contractors.

8.2 In addition to Contractor's obligation to protect its own Work, Contractor shall protect the work of any other contractor that Contractor encounters while working on the Project.

8.3 If any part of Contractor's Work depends for proper execution or results upon work of District or any other contractor, the Contractor shall inspect and, before proceeding with its Work, promptly report to the District in writing any defects in District's or any other contractor's work that render Contractor's Work unsuitable for proper execution and results. Contractor shall be held accountable for damages to District for District's or any other contractor's work that Contractor failed to inspect or should have inspected. Contractor's failure to inspect and report shall constitute

Contractor's acceptance of all District's or any other contractor's work as fit and proper for reception of Contractor's Work, except as to defects that may develop in District's or any other contractor's work after execution of Contractor's Work and not caused by execution of Contractor's Work.

8.4 To ensure proper execution of its subsequent work, Contractor shall measure and inspect work already in place and shall at once report to the District in writing any discrepancy between that executed work and the Contract Documents.

8.5 Contractor shall ascertain to its own satisfaction the scope of the Project and nature of District's or any other contracts that have been or may be awarded by District in prosecution of the Project to the end that Contractor may perform this Contract in light of the other contracts, if any.

8.6 Nothing herein contained shall be interpreted as granting to Contractor exclusive occupancy of the Site, the Premises, or of the Project. Contractor shall not cause any unnecessary hindrance or delay to the use and/or operation(s) of the Premises and/or to District or any other contractor working on the Project. If simultaneous execution of any contract or Premises operation is likely to cause interference with performance of Contractor's Contract, Contractor shall coordinate with those contractor(s), person(s), and/or entity(s) and shall notify the District of the resolution.

9. DRAWINGS AND SPECIFICATIONS

9.1 A complete list of all Drawings that form a part of the Contract is to be found as an index on the Drawings themselves, and/or may be provided to the Contractor and/or in the Table of Contents.

9.2 Materials or Work described in words that so applied have a well-known technical or trade meaning shall be deemed to refer to recognized standards, unless noted otherwise.

9.3 **Trade Name or Trade Term.** It is not the intention of this Contract to go into detailed descriptions of any materials and/or methods commonly known to the trade under "trade name" or "trade term." The mere mention or notation of "trade name" or "trade term" shall be considered a sufficient notice to Contractor that it will be required to complete the work so named, complete, finished, and operable, with all its appurtenances, according to the best practices of the trade.

9.4 The naming of any material and/or equipment shall mean furnishing and installing of same, including all incidental and accessory items thereto and/or labor therefor, as per best practices of the trade(s) involved, unless specifically noted otherwise.

9.5 Contract Documents are complementary, and what is called for by one shall be binding as if called for by all. As such, Drawings and Specifications are intended to be fully cooperative and to agree. However, if Contractor observes that Drawings and Specifications are in conflict with the Contract Documents, Contractor shall promptly notify District and Architect in writing, and any necessary changes shall be made as provided in the Contract Documents.

9.6 In the case of discrepancy or ambiguity in the Contract Documents, the order of precedence in the Agreement shall prevail. However, in the case of discrepancy or ambiguity solely between and among the Drawings and Specifications, the discrepancy or ambiguity shall be resolved in favor of the interpretation that will provide District with the functionally complete and operable Project described in the Drawings and Specifications. In case of ambiguity, conflict, or lack of information, District will furnish clarifications with reasonable promptness.

9.7 Drawings and Specifications are intended to comply with all laws, ordinances, rules, and regulations of constituted authorities having jurisdiction, and where referred to in the Contract Documents, the laws, ordinances, rules, and regulations shall be considered as a part of the Contract within the limits specified. Contractor shall bear all expense of correcting work done contrary to said laws, ordinances, rules, and regulations.

9.8 As required by Section 4-317(c), Part 1, Title 24, CCR: "Should any existing conditions such as deterioration or non-complying construction be discovered which is not covered by the DSA-approved documents wherein the finished work will not comply with Title 24, California Code of Regulations, a construction change document, or a separate set of plans and specifications, detailing and specifying the required repair work shall be submitted to and approved by DSA before proceeding with the repair work."

9.9 Ownership of Drawings

All copies of Plans, Drawings, Designs, Specifications, and copies of other incidental architectural and engineering work, or copies of other Contract Documents furnished by District, are the property of District. They are not to be used by Contractor in other work and, with the exception of signed sets of Contract Documents, are to be returned to District on request at completion of Work, or may be used by District as it may require without any additional costs to District. Neither the Contractor nor any Subcontractor, or material or equipment supplier shall own or claim a copyright in the Drawings, Specifications, and other documents prepared by the Architect. District hereby grants the Contractor, Subcontractors, sub-subcontractors, and material or equipment suppliers a limited license to use applicable portions of the Drawings prepared for the Project in the execution of their Work under the Contract Documents.

10. CONTRACTOR'S SUBMITTALS AND SCHEDULES

Contractor's submittals shall comply with the provisions and requirements of the Specifications including, without limitation Submittals.

10.1 Schedule of Work, Schedule of Submittals, and Schedule of Values

10.1.1 Within **TEN (10)** calendar days after the date of the Notice to Proceed (unless otherwise specified in the Specifications), the Contractor shall prepare and submit to the District for review, in a form supported by sufficient data to substantiate its accuracy as the District may require:

10.1.1.1 Preliminary Schedule. A preliminary schedule of construction indicating the starting and completion dates of the various stages of the Work, including any information and following any form as may be specified in the Specifications. Once approved by District, this shall become the Construction

Schedule. This schedule shall include and identify all tasks that are on the Project's critical path with a specific determination of the start and completion of each critical path task as well as all Contract milestones and each milestone's completion date(s) as may be required by the District.

10.1.1.1.1 The District is not required to approve a preliminary schedule of construction with early completion, i.e., one that shows early completion dates for the Work and/or milestones. Contractor shall not be entitled to extra compensation if the District approves a Construction Schedule with an early completion date and Contractor completes the Project beyond the date shown in the schedule but within the Contract Time. A Construction Schedule showing the Work completed in less than the Contract Time, the time between the early completion date and the end of the Contract Time shall be Float.

10.1.1.2 Preliminary Schedule of Values. A preliminary schedule of values for all of the Work, which must include quantities and prices of items aggregating the Contract Price and must subdivide the Work into component parts in sufficient detail to serve as the basis for progress payments during construction. Unless the Special Conditions contain different limits, this preliminary schedule of values shall include, at a minimum, the following information and the following structure:

10.1.1.2.1 Divided into at least the following categories:

10.1.1.2.1.1 Overhead and profit;
10.1.1.2.1.2 Supervision;
10.1.1.2.1.3 General conditions;
10.1.1.2.1.4 Layout;
10.1.1.2.1.5 Mobilization;
10.1.1.2.1.6 Submittals;
10.1.1.2.1.7 Bonds and insurance;
10.1.1.2.1.8 Close-out/Certification documentation;
10.1.1.2.1.9 Demolition;
10.1.1.2.1.10 Installation;
10.1.1.2.1.11 Rough-in;
10.1.1.2.1.12 Finishes;
10.1.1.2.1.13 Testing;
10.1.1.2.1.14 Punchlist and District acceptance.

10.1.1.2.2 And also divided by each of the following areas:

10.1.1.2.2.1 Site work;
10.1.1.2.2.2 By each building;
10.1.1.2.2.3 By each floor.

10.1.1.2.3 The preliminary schedule of values shall not provide for values any greater than the following percentages of the Contract value:

10.1.1.2.3.1 Mobilization and layout combined to equal not more than 1%;

10.1.1.2.3.2 Submittals, samples and shop drawings combined to equal not more than 3%;

10.1.1.2.3.3 Bonds and insurance combined to equal not more than 2.5%.

10.1.1.2.3.4 Closeout documentation shall have a value in the preliminary schedule of not less than 3%.

10.1.1.2.4 Notwithstanding any provision of the Contract Documents to the contrary, payment of the Contractor's overhead, supervision, general conditions costs, and profit, as reflected in the Cost Breakdown, shall be paid based on percentage complete, with the disbursement of Progress Payments and the Final Payment.

10.1.1.2.5 Contractor shall certify that the preliminary schedule of values as submitted to the District is accurate and reflects the costs as developed in preparing Contractor's bid. For example, without limiting the foregoing, Contractor shall not "front-load" the preliminary schedule of values with dollar amounts greater than the value of activities performed early in the Project.

10.1.1.2.6 The preliminary schedule of values shall be subject to the District's review and approval of the form and content thereof. In the event that the District objects to any portion of the preliminary schedule of values, the District shall notify the Contractor, in writing, of the District's objection(s) to the preliminary schedule of values. Within five (5) calendar days of the date of the District's written objection(s), Contractor shall submit a revised preliminary schedule of values to the District for review and approval. The foregoing procedure for the preparation, review and approval of the preliminary schedule of values shall continue until the District has approved the entirety of the preliminary schedule of values.

10.1.1.2.7 Once the preliminary schedule of values is approved by the District, this shall become the Schedule of Values. The Schedule of Values shall not be thereafter modified or amended by the Contractor without the prior consent and approval of the District, which may be granted or withheld in the sole discretion of the District.

10.1.1.3 **Preliminary Schedule of Submittals.** A preliminary schedule of submittals, including Shop Drawings, Product Data, and Samples submittals. Once approved by District, this shall become the Submittal Schedule. All submittals shall be forwarded to the District by the date indicated on the approved Submittal Schedule, unless an earlier date is necessary to maintain the Construction Schedule, in which case those submittals shall be forwarded to the District so as not to delay the Construction Schedule. Upon request by the District, Contractor shall provide an electronic copy of all submittals to the District. All submittals shall be submitted no later than 90 days after the Notice to Proceed.

10.1.1.4 **Safety Plan.** Contractor's Safety Plan specifically adapted for the Project. Contractor's Safety Plan shall comply with the following requirements:

10.1.1.4.1 All applicable requirements of California Division of Occupational Safety and Health ("CalOSHA") and/or of the United States Occupational Safety and Health Administration ("OSHA").

10.1.1.4.2 All provisions regarding Project safety, including all applicable provisions in these General Conditions.

10.1.1.4.3 Contractor's Safety Plan shall be in English and in the language(s) of the Contractor's and its Subcontractors' employees.

10.1.1.5 **Update Registered Subcontractors List.** The name, address, telephone number, facsimile number, California State Contractors License number, classification, DIR registration number and monetary value of all Subcontracts of any tier for parties furnishing labor, material, or equipment for completion of the Project.

10.1.2 Contractor must provide all schedules both in hard copy and electronically, in a format (e.g., Microsoft Project or Primavera) approved in advance by the District.

10.1.3 The District will review the schedules submitted and the Contractor shall make changes and corrections in the schedules as requested by the District and resubmit the schedules until approved by the District.

10.1.4 The District shall have the right at any time to revise the schedule of values if, in the District's sole opinion, the schedule of values does not accurately reflect the value of the Work performed.

10.1.5 All schedules must be approved by the District before Contractor can rely on them as a basis for payment.

10.2 Monthly Progress Schedule(s)

10.2.1 Contractor shall provide Monthly Progress Schedule(s) to the District. A Monthly Progress Schedule shall update the approved Construction Schedule or the last Monthly Progress Schedule, showing all work completed and to be completed as well as updating the Registered Subcontractors List. The monthly Progress Schedule shall be sent within the timeframe requested by the District and shall be in a format acceptable to the District and contain a written narrative of the progress of work that month and any changes, delays, or events that may affect the work. The process for District approval of the Monthly Progress Schedule shall be the same as the process for approval of the Construction Schedule.

10.2.2 Contractor shall submit Monthly Progress Schedule(s) with all payment applications.

10.2.3 Contractor must provide all schedules both in hard copy and electronically, in a format (e.g., Microsoft Project or Primavera) approved in advance by the District.

10.2.4 The District will review the schedules submitted and the Contractor shall make changes and corrections in the schedules as requested by the District and resubmit the schedules until approved by the District.

10.2.5 The District shall have the right at any time to revise the schedule of values if, in the District's sole opinion, the schedule of values does not accurately reflect the value of the Work performed.

10.2.6 All schedules must be approved by the District before Contractor can rely on them as a basis for payment.

10.3 Material Safety Data Sheets (MSDS)

Contractor is required to ensure Material Safety Data Sheets are available in a readily accessible place at the Site for any material requiring a Material Safety Data Sheet per the federal "Hazard Communication" standard, or employees' "right to know" law. The Contractor is also required to ensure proper labeling on substances brought onto the job site and that any person working with the material or within the general area of the material is informed of the hazards of the substance and follows proper handling and protection procedures. Two additional copies of the Material Safety Data Sheets shall also be submitted directly to the District.

10.4 Submittals

10.4.1 Architect's favorable review shall neither be construed as a complete check nor relieve the Contractor, Subcontractor, manufacturer, fabricator, or supplier from responsibility for any deficiency that may exist or from any departures or deviations from the requirements of the Contract Documents unless the Contractor has, in writing, called Architect's attention to the deviations at the time of submission and the Architect has given specific written response. "Favorable review" shall mean merely that Architect has no objection to Contractor using, upon Contractor's own full responsibility, plan or method of Work proposed, or furnishing materials or equipment proposed.

11. SITE ACCESS, CONDITIONS, AND REQUIREMENTS

11.1 Site Investigation

Before bidding on this Work, Contractor shall make a careful investigation of the Site and thoroughly familiarize itself with the requirements of the Contract. By the act of submitting a bid for the Work included in this Contract, Contractor shall be deemed to have made a complete study and investigation, and to be familiar with and accepted the existing conditions of the Site.

Prior to commencing the Work, Contractor and the District's representative shall survey the Site to document the condition of the Site. Contractor will record the survey in digital videotape format and provide an electronic copy to the District within fourteen (14) days of the survey. This electronic record shall serve as a basis for determining any damages caused by the Contractor during the Project. The Contractor may also document any pre-existing conditions in writing, provided that both the Contractor and the District's representative agree on said conditions and sign a memorandum documenting the same.

11.2 Soils Investigation Report

11.2.1 When a soils investigation report obtained from test holes at Site or for the Project is available, that report may be available to the Contractor but shall not be a part of this Contract and shall not alleviate or excuse the Contractor's obligation to perform its own investigation. Any information obtained from that report or any information given on Drawings as to subsurface soil condition or to elevations of existing grades or elevations of underlying rock is approximate only, is not guaranteed, does not form a part of this Contract, and Contractor may not rely thereon. By submitting its bid, Contractor acknowledges that it has made visual examination of Site and has made whatever tests Contractor deems appropriate to determine underground condition of soil. Although any such report is not a part of this Contract, recommendations from the report may be included in the Drawings, Specifications, or other Contract Documents. It is Contractor's sole responsibility to thoroughly review all Contract Documents, Drawings, and Specifications.

11.2.2 Contractor agrees that no claim against District will be made by Contractor for damages and hereby waives any rights to damages if, during progress of Work, Contractor encounters subsurface or latent conditions at Site materially differing from those shown on Drawings or indicated in Specifications, or for unknown conditions of an unusual nature that differ materially from those ordinarily encountered in the work of the character provided for in Plans and Specifications, except as indicated in the provisions of these General Conditions regarding trenches, trenching, and/or existing utility lines.

11.3 Access to Work

District and its representatives shall at all times have access to Work wherever it is in preparation or progress, including storage and fabrication. Contractor shall provide safe and proper facilities for such access so that District's representatives may perform their functions.

11.4 Layout and Field Engineering

11.4.1 All field engineering required for layout of this Work and establishing grades for earthwork operations shall be furnished by Contractor at its expense. This Work shall be done by a qualified, California-registered civil engineer approved in writing by District and Architect. Any required Record and/or As-Built Drawings of Site development shall be prepared by the approved civil engineer.

11.4.2 The Contractor shall be responsible for having ascertained pertinent local conditions such as location, accessibility, and general character of the Site and for having satisfied itself as to the conditions under which the Work is to be performed. Contractor shall follow best practices, including but not limited to potholing to avoid utilities. District shall not be liable for any claim for allowances because of Contractor's error, failure to follow best practices, or negligence in acquainting itself with the conditions at the Site.

11.4.3 Contractor shall protect and preserve established benchmarks and monuments and shall make no changes in locations without the prior written approval of District. Contractor shall replace any benchmarks or monuments that

are lost or destroyed subsequent to proper notification of District and with District's approval.

11.5 Utilities

Utilities shall be provided as indicated in the Specifications.

11.6 Sanitary Facilities

Sanitary facilities shall be provided as indicated in the Specifications.

11.7 Surveys

Contractor shall provide surveys done by a California-licensed civil engineer surveyor to determine locations of construction, grading, and site work as required to perform the Work.

11.8 Regional Notification Center

The Contractor, except in an emergency, shall contact the appropriate regional notification center at least two (2) days prior to commencing any excavation if the excavation will be conducted in an area or in a private easement that is known, or reasonably should be known, to contain subsurface installations other than the underground facilities owned or operated by the District, and obtain an inquiry identification number from that notification center. No excavation shall be commenced and/or carried out by the Contractor unless an inquiry identification number has been assigned to the Contractor or any Subcontractor and the Contractor has given the District the identification number. Any damages arising from Contractor's failure to make appropriate notification shall be at the sole risk and expense of the Contractor. Any delays caused by failure to make appropriate notification shall be at the sole risk of the Contractor and shall not be considered for an extension of the Contract Time.

11.9 Existing Utility Lines

11.9.1 Pursuant to Government Code section 4215, District assumes the responsibility for removal, relocation, and protection of main or trunk utility lines and facilities located on the construction Site at the time of commencement of construction under this Contract with respect to any such utility facilities that are not identified in the Plans and Specifications. Contractor shall not be assessed for liquidated damages for delay in completion of the Project caused by failure of District or the owner of a utility to provide for removal or relocation of such utility facilities.

11.9.2 Locations of existing utilities provided by District shall not be considered exact but approximate within a reasonable margin and shall not relieve Contractor of responsibilities to exercise reasonable care or costs of repair due to Contractor’s failure to do so. District shall compensate Contractor for the costs of locating, repairing damage not due to the failure of Contractor to exercise reasonable care, and removing or relocating such utility facilities not indicated in the Plans and Specifications with reasonable accuracy, and for equipment necessarily idle during such work.

11.9.3 No provision herein shall be construed to preclude assessment against Contractor for any other delays in completion of the Work. Nothing in this Article shall be deemed to require District to indicate the presence of existing service laterals, appurtenances, or other utility lines, within the exception of main or trunk utility lines or whenever the presence of these utilities on the Site of the construction Project can be inferred from the presence of other visible facilities, such as buildings, meter junction boxes, on or adjacent to the Site of the construction.

11.9.4 If Contractor, while performing Work under this Contract, discovers utility facilities not identified by District in Contract Plans and Specifications, Contractor shall immediately notify the District and the utility in writing. The cost of repair for damage to above-mentioned discovered facilities without prior written notification to the District shall be borne by the Contractor.

11.10 Notification

Contractor understands, acknowledges and agrees that the purpose for prompt notification to the District pursuant to these provisions is to allow the District to investigate the condition(s) so that the District shall have the opportunity to decide how the District desires to proceed as a result of the condition(s). Accordingly, failure of Contractor to promptly notify the District in writing, pursuant to these provisions, shall constitute Contractor's waiver of any claim for damages or delay incurred as a result of the condition(s).

11.11 Hazardous Materials

Contractor shall comply with all provisions and requirements of the Contract Documents related to hazardous materials including, without limitation, Hazardous Materials Procedures and Requirements.

11.12 No Signs

Neither the Contractor nor any other person or entity shall display any signs not required by law or the Contract Documents at the Site, fences trailers, offices, or elsewhere on the Site without specific prior written approval of the District.

12. TRENCHES

12.1 Trenches Greater Than Five Feet

Pursuant to Labor Code section 6705, if the Contract Price exceeds $25,000 and involves the excavation of any trench or trenches five (5) feet or more in depth, the Contractor shall, in advance of excavation, promptly submit to the District and/or a registered civil or structural engineer employed by the District or Architect, a detailed plan, stamped by a licensed engineer retained by the Contractor, showing the design of shoring for protection from the hazard of caving ground during the excavation of such trench or trenches.

12.2 Excavation Safety

If such plan varies from the Shoring System Standards established by the Construction Safety Orders, the plan shall be prepared by a registered civil or structural engineer, but

in no case shall such plan be less effective than that required by the Construction Safety Orders. No excavation of such trench or trenches shall be commenced until said plan has been accepted by the District or by the person to whom authority to accept has been delegated by the District.

12.3 No Tort Liability of District

Pursuant to Labor Code section 6705, nothing in this Article shall impose tort liability upon the District or any of its employees.

12.4 No Excavation without Permits

The Contractor shall not commence any excavation Work until it has secured all necessary permits including the required CalOSHA excavation/shoring permit. Any permits shall be prominently displayed on the Site prior to the commencement of any excavation.

12.5 Discovery of Hazardous Waste and/or Unusual Conditions

12.5.1 Pursuant to Public Contract Code section 7104, if the Work involves digging trenches or other excavations that extend deeper than four feet below the Surface, the Contractor shall promptly, and before the following conditions are disturbed, notify the District, in writing, of any:

12.5.1.1 Material that the Contractor believes may be material that is hazardous waste, as defined in section 25117 of the Health and Safety Code, is required to be removed to a Class I, Class II, or Class III disposal site in accordance with provisions of existing law.

12.5.1.2 Subsurface or latent physical conditions at the Site differing from those indicated.

12.5.1.3 Unknown physical conditions at the Site of any unusual nature, different materially from those ordinarily encountered and generally recognized as inherent in work of the character provided for in the Contract.

12.5.2 The District shall promptly investigate the conditions, and if it finds that the conditions do materially so differ, or do involve hazardous waste, and cause a decrease or increase in the Contractor's cost of, or the time required for, performance of any part of the Work, shall issue a Change Order under the procedures described herein.

12.5.3 In the event that a dispute arises between District and the Contractor whether the conditions materially differ, or involve hazardous waste, or cause a decrease or increase in the Contractor's cost of, or time required for, performance of any part of the Work, the Contractor shall not be excused from any scheduled completion date provided for by the Contract, but shall proceed with all work to be performed under the Contract. The Contractor shall retain any and all rights provided either by Contract or by law that pertain to the resolution of disputes and protests.

13. INSURANCE AND BONDS

13.1 Insurance

Unless different provisions and/or limits are indicated in the Special Conditions, all insurance required of Contractor and/or its Subcontractor(s) shall be at least as broad as the amounts and include the provisions set forth herein.

13.1.1 Commercial General Liability and Automobile Liability Insurance

13.1.1.1 Contractor shall procure and maintain, during the life of this Contract, Commercial General Liability Insurance and Automobile Liability Insurance in a form at least as broad as Insurance Services (ISO) Form CG 00 01 that shall protect Contractor, its agents, representative, employees, or subcontractors, District, State, Construction Manager(s), Project Inspector(s), and Architect(s) from all claims for products and completed operations, property damage, bodily injury and personal injury, death, advertising injury, and medical payments arising from, or in connection with, the performance of the Work of the Project within the Contract Documents at the required limits, or Contractor shall procure and maintain these coverages separately. Contractor shall procure and maintain Automobile Liability Insurance in a form at least as broad as ISO Form CA 0001 covering Code 1 (any auto) at the required limits, or Contractor shall procure and maintain these coverages separately.

13.1.1.2 Contractor's deductible or self-insured retention for its Commercial General Liability Insurance policy shall not exceed five thousand dollars ($5,000) for deductible or twenty-five thousand dollars ($25,000) for self-insured retention, respectively, unless approved in writing by District.

13.1.1.3 All such policies shall be written on an occurrence form.

13.1.2 Excess Liability Insurance

13.1.2.1 If Contractor's underlying policy limits are less than required, subject to the District's sole discretion, Contractor may procure and maintain, during the life of this Contract, an Excess Liability Insurance Policy to meet the policy limit requirements of the required policies in order to satisfy, in the aggregate with its underlying policy, the insurance requirements herein including, but not limited to, primary and non-contributory, additional insured, Self-Insured Retentions (SIRs), indemnity, and defense requirements. The Excess Liability Insurance Policy shall be provided on a true "following form" or broader coverage basis, with coverage at least as broad as provided on the underlying Commercial General Liability insurance. No insurance policies maintained by the Additional Insureds, whether primary or excess, and which also apply to a loss covered hereunder, shall be called upon to contribute to a loss until Contractor's primary and excess liability policies are exhausted.

13.1.2.2 There shall be no gap between the per occurrence amount of any underlying policy and the start of the coverage under the Excess Liability Insurance Policy. Any Excess Liability Insurance Policy shall be written on a following form and shall protect Contractor, District, its trustees, employees, and agents, the State, Construction Manager(s), Program Manager(s), and

Architect(s) in amounts and including the provisions as set forth in the Supplementary Conditions (if any) and/or Special Conditions, and that complies with all requirements for Commercial General Liability and Automobile Liability and Employers' Liability Insurance.

13.1.3 **Subcontractor(s):** Contractor shall require its Subcontractor(s), if any, to procure and maintain Commercial General Liability Insurance, Automobile Liability Insurance, and Excess Liability Insurance (if Subcontractor elects to satisfy, in part the insurance required herein by procuring and maintaining an Excess Liability Insurance Policy) with minimum limits at least equal to the amount required of Contractor except where smaller minimum limits are permitted as set forth below. For Commercial General Liability coverage, subcontractors shall provide coverage with a form at least as broad as CG 20 38 04 13.

13.1.4 Workers' Compensation and Employers' Liability Insurance

13.1.4.1 In accordance with provisions of section 3700 of the California Labor Code, the Contractor and every Subcontractor shall be required to secure the payment of compensation to its employees.

13.1.4.2 Contractor shall procure and maintain, during the life of this Contract, Workers' Compensation Insurance and Employers' Liability Insurance for all of its employees engaged in work under this Contract, on/or at the Site of the Project. This coverage shall cover, at a minimum, medical and surgical treatment, disability benefits, rehabilitation therapy, and survivors' death benefits. Contractor shall require its Subcontractor(s), if any, to procure and maintain Workers' Compensation Insurance and Employers' Liability Insurance for all employees of Subcontractor(s). Any class of employee or employees not covered by a Subcontractor's insurance shall be covered by Contractor's insurance. If any class of employee or employee engaged in Work under this Contract, on or at the Site of the Project, is not protected under the Workers' Compensation Insurance, Contractor shall provide, or shall cause a Subcontractor to provide, adequate insurance coverage for the protection of any employee(s) not otherwise protected before any of those employee(s) commence work.

13.1.4.3 The Workers' Compensation policy shall be endorsed with a waiver of subrogation in favor of District for all work performed by Contractor, its employees, agents and subcontractors.

13.1.5 Builder's Risk Insurance: Builder's Risk "All Risk" Insurance

Contractor shall procure and maintain, during the life of this Contract, Builder's Risk (Course of Construction) insurance utilizing an "All Risk" (Special Perils) coverage form, with limits equal to the completed value of the Project and no coinsurance penalty provisions. The cost value basis shall be consistent with the total replacement cost of all insurable Work of the Project included within the Contract Documents. Coverage is to insure against all risks of accidental physical loss and shall include without limitation the perils of vandalism and/or malicious mischief (both without any limitation regarding vacancy or occupancy), sprinkler leakage, civil authority, theft, sonic disturbance, earthquake, flood, collapse, wind, rain, dust, fire, war, terrorism, lightning, smoke, and rioting. Coverage shall include debris removal, demolition, increased costs due to enforcement of all applicable ordinances and/or

laws in the repair and replacement of damaged and undamaged portions of the property, and reasonable costs for the Architect's and engineering services and expenses required as a result of any insured loss upon the Work and Project, including completed Work and Work in progress, to the full insurable value thereof.

13.1.6 <u>Pollution Liability Insurance</u>

13.1.6.1 Contractor shall procure and maintain Pollution Liability Insurance in a form at least as broad as ISO Form CG 2415 that shall protect Contractor, District, State, Construction Manager(s), Project Inspector(s), and Architect(s) from all claims for bodily injury, property damage, including natural resource damage, cleanup costs, removal, storage, disposal, and/or use of the pollutant arising from operations under this Contract, and defense, including costs and expenses incurred in the investigation, defense, or settlement of claims, or Contractor shall procure and maintain these coverages separately. Coverage shall apply to sudden and/or gradual pollution conditions resulting from the escape or release of smoke, vapors, fumes, acids, alkalis, toxic chemicals, liquids, or gases, natural gas, waste materials, or other irritants, contaminants, or pollutants, including asbestos.

13.1.6.2 Contractor warrants that any retroactive date applicable to coverage under the policy shall predate the effective date of the Contract and that continuous coverage will be maintained or an extended reporting or discovery period will be exercised for a period of three (3) years, beginning from the time that the Work under the Contract is completed.

13.1.6.3 If the services involve lead-based paint or asbestos identification/ remediation, Contractor's Pollution Liability policy shall not contain lead-based paint or asbestos exclusions. If the services involve mold identification/ remediation, Contractor's Pollution Liability policy shall not contain a mold exclusion, and the definition of Pollution shall include microbial matter, including mold.

13.1.6.4 If Contractor is responsible for removing any pollutants from a site, then Contractor shall ensure that Any Auto, including owned, non-owned, and hired, is included within the above policies and at the required limits, to cover its automobile exposure from transporting the pollutants from the site to an approved disposal site. This coverage shall include the Motor Carrier Act Endorsement, MCS 90.

13.1.7 <u>Proof of Insurance and Other Requirements: Endorsements and Certificates</u>

13.1.7.1 Contractor shall not commence Work nor shall it allow any Subcontractor to commence Work under this Contract, until Contractor and its Subcontractor(s) have procured all required insurance and Contractor has delivered in duplicate to the District complete endorsements (or entire insurance policies) and certificates indicating the required coverages have been obtained, and the District has approved these documents.

13.1.7.2 Endorsements, certificates, and insurance policies shall include the following:

13.1.7.2.1 A clause stating the following, or other language acceptable to the District:

"This policy shall not be canceled until written notice to District, Architect, and Construction Manager stating date of the cancellation by the insurance carrier. Date of cancellation may not be less than thirty (30) days after date of mailing notice."

13.1.7.2.2 Language stating in particular those insured, extent of insurance, location and operation to which insurance applies, expiration date, to whom cancellation and reduction notice will be sent, and length of notice period.

13.1.7.2.3 All endorsements, certificates and insurance policies shall state that District, its trustees, employees and agents, the State of California, Construction Manager(s), Program Manager(s), Inspector(s) and Architect(s) are named additional insureds under all policies except Workers' Compensation Insurance and Employers' Liability Insurance. General liability coverage can be provided in the form of an endorsement to the Contractor's insurance (at least as broad as ISO Form CG 20 10, CG 11 85 or **both** CG 20 10, CG 20 26, CG 20 33, or CG 20 38; **and** CG 20 37 forms if later revisions used).

13.1.7.2.4 All endorsements shall waive any right to subrogation against any of the named additional insureds.

13.1.7.2.5 Contractor's and Subcontractors' insurance coverage at least as broad as ISO CG 20 01 04 13 shall be primary and non-contributory to any insurance or self-insurance maintained by District, its trustees, employees and/or agents, the State of California, Construction Manager(s), Program Manager(s), Inspector(s), and/or Architect(s). This requirement shall also apply to any Excess liability policies.

13.1.7.2.6 Contractor's insurance limit shall apply separately to each insured against whom a claim is made or suit is brought.

13.1.7.3 No policy shall be amended, canceled or modified, and the coverage amounts shall not be reduced, until Contractor or Contractor's broker has provided written notice to District, Architect(s), and Construction Manager(s) stating date of the amendment, modification, cancellation or reduction, and a description of the change. Date of amendment, modification, cancellation or reduction may not be less than thirty (30) days after date of mailing notice.

13.1.7.4 Insurance written on a "claims made" basis shall be retroactive to a date that coincides with or precedes Contractor's commencement of Work, including subsequent policies purchased as renewals or replacements. Said policy is to be renewed by the Contractor and all Subcontractors for a period of five (5) years following completion of the Work or termination of this Agreement. Such insurance must have the same coverage and limits as the policy that was in effect during the term of this Agreement and will cover the Contractor and all Subcontractors for all claims made. If coverage is cancelled or non-renewed, and not replaced with another claims-made policy from with a retroactive date prior

to the effective date of this Agreement, or the start of Work date, the Contractor must purchase extended reporting period coverage for a minimum of five (5) years after completion of contract work. A copy of the claims reporting requirements must be submitted to the District for review.

13.1.7.5 Contractor's and Subcontractors' insurance policy(s) shall be primary and non-contributory to any insurance or self-insurance maintained by District, its Board Members, employees and/or agents, the State of California, Construction Manager(s), Program Manager(s), Inspector(s), and/or Architect(s).

13.1.7.6 Unless otherwise stated in the Special Conditions, all of Contractor's insurance shall be with insurance companies with an A.M. Best rating of no less than **A: VII**.

13.1.7.7 The insurance requirements set forth herein shall in no way limit the Contractor's liability arising out of or relating to the performance of the Work or related activities.

13.1.7.8 Failure of Contractor and/or its Subcontractor(s) to comply with the insurance requirements herein shall be deemed a material breach of the Contract.

[REMAINDER OF PAGE LEFT BLANK INTENTIONALLY]

13.1.8 Insurance Policy Limits

13.1.8.1 Unless different limits are indicated in the Special Conditions, the limits of insurance shall not be less than the following amounts:

Commercial General Liability	Product Liability and Completed Operations, Fire Damage Liability – Split Limit	$1,000,000 per occurrence; $2,000,000 aggregate
Automobile Liability	Any Auto – Combined Single Limit	$1,000,000
Workers' Compensation		Statutory limits pursuant to State law
Employers' Liability		$1,000,000 per accident for bodily injury or disease
Builder's Risk (Course of Construction)		Full replacement value for scope of Work
Pollution Liability		$1,000,000 per claim; $2,000,000 aggregate

13.1.8.2 If Contractor normally carries insurance in an amount greater than the minimum amounts required by District, that greater amount shall become the minimum required amount of insurance for purposes of the Contract. Therefore, Contractor hereby acknowledges and agrees that all insurance carried by it shall be deemed liability coverage for all actions it performs in connection with the Contract.

13.2 Contract Security - Bonds

13.2.1 Contractor shall furnish two surety bonds issued by a California admitted surety insurer as follows:

13.2.1.1 Performance Bond: A bond in an amount at least equal to one hundred percent (109%) of Contract Price as security for faithful performance of this Contract.

13.2.1.2 Payment Bond: A bond in an amount at least equal to one hundred percent (109%) of the Contract Price as security for payment of persons performing labor and/or furnishing materials in connection with this Contract.

13.2.2 Cost of bonds shall be included in the Bid and Contract Price.

13.2.3 All bonds related to this Project shall be in the forms set forth in these Contract Documents and shall comply with all requirements of the Contract Documents, including, without limitation, the bond forms.

14. WARRANTY/GUARANTEE/INDEMNITY

14.1 Warranty/Guarantee

14.1.1 The Contractor shall obtain and preserve for the benefit of the District, manufacturer's warranties on materials, fixtures, and equipment incorporated into the Work.

14.1.2 In addition to guarantees required elsewhere, Contractor shall, and hereby does guarantee and warrant all Work furnished on the job against all defects for a period of **ONE (1)** year after the later of the following dates, unless a longer period is provided for in the Contract Documents:

14.1.2.1 The acceptance by the District's governing board of the Work, subject to these General Conditions, or

14.1.2.2 The date that commissioning for the Project, if any, was completed.

At the District's sole option, Contractor shall repair or replace any and all of that Work, together with any other Work that may be displaced in so doing, that may prove defective in workmanship and/or materials within a **ONE (1)** year period from date of completion as defined above, unless a longer period is provided for in the Contract Documents, without expense whatsoever to District. In the event of failure of Contractor and/or Surety to commence and pursue with diligence said replacements or repairs within ten (10) days after being notified in writing, Contractor and Surety hereby acknowledge and agree that District is authorized to

proceed to have defects repaired and made good at expense of Contractor and/or Surety who hereby agree to pay costs and charges therefore immediately on demand.

14.1.3 If, in the opinion of District, defective work creates a dangerous condition or requires immediate correction or attention to prevent further loss to District or to prevent interruption of District operations, District will attempt to give the notice required above. If Contractor or Surety cannot be contacted or neither complies with District's request for correction within a reasonable time as determined by District, District may, notwithstanding the above provision, proceed to make any and all corrections and/or provide attentions the District believes are necessary. The costs of correction or attention shall be charged against Contractor and Surety of the guarantees provided in this Article or elsewhere in this Contract.

14.1.4 The above provisions do not in any way limit the guarantees on any items for which a longer guarantee is specified or on any items for which a manufacturer gives a guarantee for a longer period. Contractor shall furnish to District all appropriate guarantee or warranty certificates as indicated in the Specifications or upon request by District.

14.1.5 Nothing herein shall limit any other rights or remedies available to District.

14.2 <u>Indemnity and Defense</u>

14.2.1 To the furthest extent permitted by California law, the Contractor shall indemnify, keep and hold harmless the District, the Architect(s), and the Construction Manager(s), their respective consultants, separate contractors, board members, officers, representatives, agents, and employees, in both individual and official capacities ("Indemnitees"), against all suits, claims, injury, damages, losses, and expenses ("Claims"), including but not limited to attorney's fees, caused by, arising out of, resulting from, or incidental to the performance of the Work under this Contract by the Contractor, its Subcontractors, vendors, or suppliers. However, the Contractor's indemnification and hold harmless obligation shall be reduced by the proportion of the Indemnitees' and/or Architect's liability to the extent the Claim(s) is/are caused by the active negligence or willful misconduct of the Indemnitees, and/or defects in design furnished by the Architect, as found by a court or arbitrator of competent jurisdiction. This indemnification and hold harmless obligation of the Contractor shall not be construed to negate, abridge, or otherwise reduce any right or obligation of indemnity that would otherwise exist or arise as to any Indemnitee or other person described herein. This indemnification and hold harmless obligation includes, but is not limited to, any failure or alleged failure by Contractor to comply with any provision of law, any failure or alleged failure to timely and properly fulfill all of its obligations under the Contract Documents in strict accordance with their terms, and without limitation, any failure or alleged failure of Contractor's obligations regarding any stop payment notice actions or liens, including Civil Wage and Penalty Assessments and/or Orders by the DIR.

14.2.2 To the furthest extent permitted by California law, Contractor shall also defend Indemnitees, at its own expense, including but not limited to attorneys' fees and costs, against all Claims caused by, arising out of, resulting from, or incidental to the performance of the Work under this Contract by the Contractor, its Subcontractors, vendors, or suppliers. However, without impacting Contractor's

obligation to provide an immediate and ongoing defense of Indemnitees, the Contractor's defense obligation shall be retroactively reduced by the proportion of the Indemnitees' and/or Architect's liability to the extent caused by the active negligence or willful misconduct of the Indemnitees, and/or defects in design furnished by the Architect, as found by a court or arbitrator of competent jurisdiction. The District shall have the right to accept or reject any legal representation that Contractor proposes to defend the Indemnitees. If a conflict-of-interest bars joint representation of Contractor and Indemnitees, District shall have the right to select its own counsel, subject to Contractor's reasonable right of rejection. If any Indemnitee provides its own defense due to failure to timely respond to tender of defense, rejection of tender of defense, or conflict of interest of proposed counsel, Contractor shall reimburse such Indemnitee for any expenditures. Even if the Contractor assumes the defense of the District with acceptable counsel, the District, at its sole option, may participate in the defense, at its own expense, with counsel of its own choice without relieving the Contractor of any of its obligations hereunder. Contractor's defense obligation shall not be construed to negate, abridge, or otherwise reduce any right or obligation of defense that would otherwise exist as to any Indemnitee or other person described herein. Contractor's defense obligation includes, but is not limited to, any failure or alleged failure by Contractor to comply with any provision of law, any failure or alleged failure to timely and properly fulfill all of its obligations under the Contract Documents in strict accordance with their terms, and without limitation, any failure or alleged failure of Contractor's obligations regarding any stop payment notice actions or liens, including Civil Wage and Penalty Assessments and/or Orders by the DIR. The Contractor shall give prompt notice to the District in the event of any Claim(s).

14.2.3 Without limitation of the provisions herein, if the Contractor's obligation to indemnify and hold harmless the Indemnitees or its obligation to defend Indemnitees as provided herein shall be determined to be void or unenforceable, in whole or in part, it is the intention of the parties that these circumstances shall not otherwise affect the validity or enforceability of the Contractor's agreement to indemnify, defend, and hold harmless the rest of the Indemnitees, as provided herein. Further, the Contractor shall be and remain fully liable on its agreements and obligations herein to the fullest extent permitted by law.

14.2.4 Pursuant to Public Contract Code section 9201, the District shall provide timely notification to Contractor of the receipt of any third-party Claim relating to this Contract. The District shall be entitled to recover its reasonable costs incurred in providing said notification.

14.2.5 In any and all Claims against any of the Indemnitees by any employee of the Contractor, any Subcontractor, anyone directly or indirectly employed by any of them or anyone for whose acts any of them may be liable, the Contractor's indemnification obligation herein shall not be limited in any way by any limitation on the amount or type of damages, compensation, or benefits payable by or for the Contractor or any Subcontractor under workers' compensation acts, disability benefit acts, or other employee benefit acts.

14.2.6 The District may retain so much of the moneys due the Contractor as shall be considered necessary, until disposition of any such Claims or until the District, Architect(s) and Construction Manager(s) have received written agreement from the Contractor that they will unconditionally defend the District, Architect(s) and

Construction Manager(s), their respective officers, agents and employees, and pay any damages due by reason of settlement or judgment.

14.2.7 The Contractor's defense and indemnification obligations hereunder shall survive the completion of Work, the warranty/guarantee period, and the termination of the Contract.

15. TIME

15.1 Notice to Proceed

15.1.1 District may issue a Notice to Proceed within ninety (90) days from the date of the Notice of Award. Once Contractor has received the Notice to Proceed, Contractor shall complete the Work within the period of time indicated in the Contract Documents.

15.1.2 In the event that the District desires to postpone issuing the Notice to Proceed beyond ninety (90) days from the date of the Notice of Award, it is expressly understood that with reasonable notice to the Contractor, the District may postpone issuing the Notice to Proceed. It is further expressly understood by Contractor that Contractor shall not be entitled to any claim of additional compensation as a result of the postponement of the issuance of the Notice to Proceed.

15.1.3 If the Contractor believes that a postponement of issuance of the Notice to Proceed will cause a hardship to Contractor, Contractor may terminate the Contract. Contractor's termination due to a postponement shall be by written notice to District within ten (10) days after receipt by Contractor of District's notice of postponement. It is further understood by Contractor that in the event that Contractor terminates the Contract as a result of postponement by the District, the District shall only be obligated to pay Contractor for the Work that Contractor had performed at the time of notification of postponement. Should Contractor terminate the Contract as a result of a notice of postponement, District shall have the authority to award the Contract to the next lowest responsive responsible bidder.

15.2 Computation of Time / Adverse Weather

15.2.1 The Contractor will only be allowed a time extension for Adverse Weather conditions if requested by Contractor in compliance with the time extension request procedures and only if all of the following conditions are met:

15.2.1.1 The weather conditions constitute Adverse Weather, as defined herein;

15.2.1.2 Contractor can verify that the Adverse Weather caused delays in excess of five (5) hours of the indicated labor required to complete the scheduled tasks of Work on the day affected by the Adverse Weather;

15.2.1.3 The Contractor's crew is dismissed as a result of the Adverse Weather;

15.2.1.4 Said delay adversely affects the critical path in the Construction Schedule; and

15.2.1.5 Exceeds twelve (12) days of delay per year.

15.2.2 If the aforementioned conditions are met, a non-compensable day-for-day extension will only be allowed for those days in excess of those indicated herein.

15.2.3 The Contractor shall work seven (7) days per week, if necessary, irrespective of inclement weather, to maintain access and the Construction Schedule, and to protect the Work under construction from the effects of Adverse Weather, all at no further cost to the District.

15.2.4 The Contract Time has been determined with consideration given to the average climate weather conditions prevailing in the County in which the Project is located.

15.3 Hours of Work

15.3.1 Sufficient Forces

Contractor and Subcontractors shall continuously furnish sufficient and competent work forces with the required levels of familiarity with the Project and skill, training and experience to ensure the prosecution of the Work in accordance with the Construction Schedule.

15.3.2 Performance During Working Hours

Work shall be performed during regular working hours as permitted by the appropriate governmental agency except that in the event of an emergency, or when required to complete the Work in accordance with job progress, Work may be performed outside of regular working hours with the advance written consent of the District and approval of any required governmental agencies.

15.3.3 No Work during State Testing

Contractor shall, at no additional cost to the District and at the District's request, coordinate its Work to not disturb District students including, without limitation, not performing any Work when students at the Site are taking State or Federally-required tests. The District or District's Representative will provide Contractor with a schedule of test dates concurrent with the District's issuance of the Notice to Proceed, or as soon as test dates are made available to the District.

15.4 Progress and Completion

15.4.1 Time of the Essence

Time limits stated in the Contract Documents are of the essence to the Contract. By executing the Agreement, the Contractor confirms that the Contract Time is a reasonable period for performing the Work.

15.4.2 No Commencement Without Insurance or Bonds

The Contractor shall not commence operations on the Project or elsewhere prior to the effective date of insurance and bonds. The date of commencement of the Work shall not be changed by the effective date of such insurance or bonds. If Contractor commences Work without insurance and bonds, all Work is performed at Contractor's

peril and shall not be compensable until and unless Contractor secures bonds and insurance pursuant to the terms of the Contract Documents and subject to District claim for damages.

15.5 Schedule

Contractor shall provide to District, Construction Manager, and Architect a schedule in conformance with the Contract Documents and as required in the Notice to Proceed and the Contractor's Submittals and Schedules section of these General Conditions.

15.6 Expeditious Completion

The Contractor shall proceed expeditiously with adequate forces and shall achieve Completion within the Contract Time.

16. EXTENSIONS OF TIME – LIQUIDATED DAMAGES

16.1 Liquidated Damages

Contractor and District hereby agree that the exact amount of damages for failure to complete the Work within the time specified is extremely difficult or impossible to determine. If the Work is not completed within the time specified in the Contract Documents, it is understood that the District will suffer damage. It being impractical and unfeasible to determine the amount of actual damage, it is agreed the Contractor shall pay to District as fixed and liquidated damages, and not as a penalty, the amount set forth in the Agreement for each calendar day of delay in completion. Contractor and its Surety shall be liable for the amount thereof pursuant to Government Code section 53069.85.

16.2 Excusable Delay

16.2.1 Contractor shall not be charged for liquidated damages because of any delays in completion of the Work which are not the fault of Contractor or its Subcontractors, including adverse weather delays, strikes, acts of God as defined in Public Contract Code section 7105, acts of enemy, epidemics, and quarantine restrictions. Contractor shall, within five (5) calendar days of beginning of any delay, including a Force Majeure event, notify District in writing of causes of delay including documentation and facts explaining the delay and the direct correlation between the cause and effect ("Notice of Delay"). District shall review the facts and extent of any delay and shall grant extension(s) of time for completing Work when, in its judgment, the findings of fact justify an extension. Extension(s) of time shall apply only to that portion of Work affected by delay and shall not apply to other portions of Work not so affected. An extension of time may only be granted if Contractor has timely submitted the Construction Schedule as required herein.

16.2.2 Contractor's Notice of Delay and request for a time extension pursuant to subparagraph 16.2 is a condition precedent to Contractor's submittal of and/or entitlement to a claim pursuant to Article 25 of these Construction Provisions. Contractor shall notify the District pursuant to the Claims Process provisions in these General Conditions of any anticipated delay and its cause. Following submission of a claim, the District may determine whether the delay is to be considered avoidable or

unavoidable, how long it continues, and to what extent the prosecution and completion of the Work might be delayed thereby.

16.2.3 In the event the Contractor requests an extension of Contract Time for unavoidable delay, such request shall be submitted in accordance with the provisions in the Contract Documents governing changes in Work. When requesting time, requests must be submitted with full justification and documentation. If the Contractor fails to submit justification, it waives its right to a time extension at a later date. Such justification must be based on the official Construction Schedule as updated at the time of occurrence of the delay or execution of Work related to any changes to the Scope of Work. Any claim for delay must include the following information as support, without limitation:

16.2.3.1 The duration of the activity relating to the changes in the Work and the resources (manpower, equipment, material, etc.) required to perform the activities within the stated duration.

16.2.3.2 Specific logical ties to the Contract Schedule for the proposed changes and/or delay showing the activity/activities in the Construction Schedule that are affected by the change and/or delay. In particular, Contractor must show an actual impact to the schedule, after making a good faith effort to mitigate the delay by rescheduling the work, by providing an analysis of the schedule ("Time Impact Analysis"). Such Time Impact Analysis shall describe in detail the cause and effect of the delay and the impact on the critical dates in the Project schedule and main sequence of schedule activities to enable District to evaluate the impact of changed Work to the scheduled critical path. (This information must be provided for any portion of any delay of seven (7) days or more.) The Contractor shall be responsible for all costs associated with the preparation of Time Impact Analyses.

16.2.4 A recovery schedule must be submitted within twenty (20) calendar days of written notification to the District of causes of delay to recover the lost time within seven (7) calendar days. As part of this submittal, the Contractor shall provide a written narrative for each revision made to recapture the lost time. If the revisions include sequence changes, the Contractor shall provide a schedule diagram comparing the original sequence to the revised sequence of work. The revisions shall not be incorporated into any schedule update until the revisions have been reviewed by District. At District's discretion, the Contractor can be required to provide Subcontractor certifications for revisions affecting said Subcontractors.

16.2.5 Contractor must comply with requirements in subsection 16.2 for a Notice of Delay and supporting justification notwithstanding if Contractor contends the specific delay period is unknown and continuing. When submitting a Notice of Delay and supporting justification, Contractor must provide an estimated delay duration to critical path activities at the time the Notice of Delay and supporting justification is required to be submitted. Failure of the Contractor to perform in accordance with the current schedule update shall not be excused by submittal of a Notice of Delay. If Contractor contends the delaying event(s) are continuing, Contractor must update monthly the estimated delay period with supporting justification.

16.2.6 Contractor's failure to timely submit a written Notice of Delay and/or provide the justification required in subparagraph 16.2 shall constitute Contractor's

waiver of any right to later submit a Proposed Change Order or pursue a Claim on the circumstances giving rise to the request, or to later pursue any additional money or time extensions in any manner related to that issue, regardless of the merits because the Contractor will not have satisfied a condition precedent or exhausted administrative remedies required to show entitlement to a Contract Time adjustment. Contractor acknowledges that these written notices and justification requirements are critically important to District's Work, Project management, and evaluating potential options and alternatives to implement mitigation efforts to reduce or eliminate additional Project costs and delays.

16.3 <u>No Additional Compensation for Delays Within Contractor's Control</u>

16.3.1 Contractor is aware that governmental agencies, including, without limitation, the Division of the State Architect, the Department of General Services, gas companies, electrical utility companies, water districts, and other agencies may have to approve Contractor-prepared drawings or approve a proposed installation. Accordingly, Contractor shall include in its bid, time for possible review of its drawings and for reasonable delays and damages that may be caused by such agencies. Thus, Contractor is not entitled to make a claim for damages or delays arising from the review of Contractor's drawings.

16.3.2 Contractor shall only be entitled to compensation for delay when all of the following conditions are met:

16.3.2.1 The District is responsible for the delay;

16.3.2.2 The delay is unreasonable under the circumstances involved;

16.3.2.3 The delay was not within the contemplation of the District and Contractor;

16.3.2.4 The delay could not have been avoided or mitigated by Contractor's reasonable diligence; and

16.3.2.5 Contractor timely complies with the claims procedure of the Contract Documents.

16.3.3 Where an event for which District is responsible impacts the projected Completion Date, the Contractor shall provide a written mitigation plan, including a schedule diagram, which explains how (e.g., increase crew size, overtime, etc.) the impact can be mitigated. The Contractor shall also include a detailed cost breakdown of the labor, equipment, and material the Contractor would expend to mitigate District-caused time impact. The Contractor shall submit its mitigation plan to District within fourteen (14) calendar days from the date of discovery of the impact. The Contractor is responsible for the cost to prepare the mitigation plan.

16.3.4 Where a change in the Work extends the Contract Time, Contractor may request and recover additional, actual direct costs, provided that Contractor can demonstrate such additional costs are:

16.3.4.1 Actually incurred performing the Work;

16.3.4.2 Not compensated by the Markup allowed; and

16.3.4.3 Directly result from the extended Contract Time.

16.3.5 Contractor shall comply with all required procedures, documentation and time requirements in the Contract Documents. Contractor may not seek or recover such costs using formulas (e.g. Eichleay, labor factors). No time will be granted under this Contract for cumulative effect of changes.

16.4 Force Majeure

"Force Majeure" means any event or circumstance unknown at the time of contracting that is beyond the parties' control and makes performance of the contract impractical or impossible. The Party seeking to have its performance obligation(s) excused must demonstrate that there was such an insuperable interference occurring without the party's intervention as could not have been prevented by the exercise of prudence, diligence, and care, by providing prompt notice to the other Party, including full particulars of such event, of its inability to perform its obligations due to such event, following commencement of the claiming Party's inability to so perform its obligations. To the extent satisfying these conditions, Force Majeure events include the following: acts of God, war, civil unrest, epidemic, fire, smoke, volcanic eruption, earthquake, strike, unusually severe weather, flood, or shortage of transportation facilities, lock out, or commandeering of materials, product, plant, or facilities by the government. Force Majeure shall not be based on a Party's financial inability to perform under this Agreement unless there exists extreme and unreasonable difficulty, expense, injury, or loss involved. Costs imposed by the government on sales or importation of goods or materials including, without limitation, tariffs or taxes, are not Force Majeure. A Force Majeure event does not include an act of negligence or intentional wrongdoing by a Party. Any Party claiming a Force Majeure event shall use reasonable diligence to remove the condition that prevents performance and shall not be entitled to suspend performance of its obligations in any greater scope or for any longer duration than is required by the Force Majeure event. Each Party shall use its best efforts to mitigate the effects of such Force Majeure event, remedy its inability to perform, and resume full performance of its obligations hereunder. No obligation that arose before the Force Majeure event that could and should have been fully performed before such Force Majeure event is excused as a result of such Force Majeure event.

16.5 Float or Slack in the Schedule

Float or slack is the amount of time between the early start date and the late start date, or the early finish date and the late finish date, of any of the activities in the schedule. Float or slack is not for the exclusive use of or benefit of either the District or the Contractor, but its use shall be determined solely by the District.

17. CHANGES IN THE WORK

17.1 No Changes Without Authorization

17.1.1 There shall be no change whatsoever in the Drawings, Specifications, or in the Work without an executed Change Order or a written Construction Change Directive authorized by the District as herein provided. District shall not be liable for the cost of any extra work or any substitutions, changes, additions, omissions, or

deviations from the Drawings and Specifications unless the District's governing board has authorized the same and the cost thereof has been approved in writing by Change Order or Construction Change Directive in advance of the changed Work being performed. No extension of time for performance of the Work shall be allowed hereunder unless claim for such extension is made at the time changes in the Work are ordered, and such time duly adjusted and approved in writing in the Change Order or Construction Change Directive. Contractor shall be responsible for any costs incurred by the District for professional services and DSA fees and/or delay to the Project Schedule, if any, for DSA to review any request for changes to the DSA approved plans and specifications for the convenience of the Contractor and/or to accommodate the Contractor's means and methods. The provisions of the Contract Documents shall apply to all such changes, additions, and omissions with the same effect as if originally embodied in the Drawings and Specifications.

17.1.2 Contractor shall perform immediately all work that has been authorized by a fully executed Change Order or Construction Change Directive. Contractor shall be fully responsible for any and all delays and/or expenses caused by Contractor's failure to expeditiously perform this Work.

17.1.3 Should any Change Order result in an increase in the Contract Price or extend the Contract Time, the cost of or length of extension in that Change Order shall be agreed to, in writing, by the District in advance of the Work by Contractor and shall be subject to the monetary limitations set forth in Public Contract Code section 20118.4. In the event that Contractor proceeds with any change in Work without a Change Order executed by the District or Construction Change Directive, Contractor waives any claim of additional compensation or time for that additional work. Under no circumstances shall Contractor be entitled to any claim of additional compensation or time not expressly requested by Contractor in a Proposed Change Order or approved by District in an executed Change Order.

17.1.4 A Change Order or Construction Change Directive will become effective when approved by the Board, notwithstanding that Contractor has not signed it. A Change Order or Construction Change Directive will become effective without Contractor's signature provided District indicates it as a "Unilateral Change Order". Any dispute as to the adjustment in the Contract Price or Contract Time, if any, of the Unilateral Change Order shall be resolved pursuant to the Payments and Claims Process provisions herein.

17.1.5 Contractor understands, acknowledges, and agrees that the reason for District authorization is so that District may have an opportunity to analyze the Work and decide whether the District shall proceed with the Change Order or alter the Project so that a change in Work becomes unnecessary.

17.2 <u>Architect Authority</u>

The Architect will have authority to order minor changes in the Work not involving any adjustment in the Contract Price, or an extension of the Contract Time, or a change that is inconsistent with the intent of the Contract Documents. These changes shall be effected by written Change Order, Construction Change Directive, by Architect's response(s) to RFI(s), or by Architect's Supplemental Instructions ("ASI").

17.3 Price Request

17.3.1 Definition of Price Request

A Price Request is a written request prepared by the Architect requesting the Contractor to submit to the District and the Architect an estimate of the effect of a proposed change in the Work on the Contract Price and the Contract Time.

17.3.2 Scope of Price Request

A Price Request shall contain adequate information, including any necessary Drawings and Specifications, to enable Contractor to provide the cost breakdowns required herein. The Contractor shall not be entitled to any additional compensation for preparing a response to a Price Request, whether ultimately accepted or not.

17.4 Change Orders

17.4.1 A Change Order is a written instrument prepared and issued by the District and/or the Architect and signed by the District (as authorized by the District's Governing Board), the Contractor, the Architect, and approved by the Project Inspector (if necessary) and DSA (if necessary), stating their agreement regarding all of the following:

17.4.1.1 A description of a change in the Work;

17.4.1.2 The amount of the adjustment in the Contract Price, if any; and

17.4.1.3 The extent of the adjustment in the Contract Time, if any.

17.5 Proposed Change Order

17.5.1 Definition of Proposed Change Order

A Proposed Change Order ("PCO") is a written request prepared by the Contractor requesting that the District and the Architect issue a Change Order based upon a proposed change to the Work.

17.5.2 Changes in Contract Price

A PCO shall include breakdowns and backup documentation pursuant to the revisions herein and sufficient, in the District's judgment, to validate any change in Contract Price. In no case shall Contractor or any of its Subcontractors be permitted to reserve rights for additional compensation for Change Order Work.

17.5.3 Changes in Time

A PCO shall also include any changes in time required to complete the Project. Any additional time requested shall not be the number of days to make the proposed change but must be based upon the impact to the Construction Schedule as defined in the Contract Documents. The Contractor shall justify the proposed change in time by submittal of a schedule analysis that accurately shows the impact of the change on the critical path of the Construction Schedule ("Time Impact Analysis"). If

Contractor fails to request a time extension in a PCO, including the Time Impact Analysis, then the Contractor is thereafter precluded from requesting, and waives any right to request, additional time and/or claim a delay. In no case shall Contractor or any of its Subcontractors be permitted to reserve rights for additional time for Change Order Work. A PCO that leaves the amount of time requested blank, or states that such time requested is "to be determined", is not permitted and shall also constitute a waiver of any right to request additional time and/or claim a delay.

17.5.4 Allowances

If there is an Allowance, then Contractor shall not bill for or be due any portion of an Allowance unless the District has identified specific work, Contractor has submitted a price for that work or the District has proposed a price for that work, the District has accepted the cost for that work, and the District has executed an Allowance Expenditure Directive incorporating that work. If Allowance was included in Contract Price before mark-up ("above the line"), Allowance Expenditure Directives shall be based on Contractor's costs, without overhead and profit, for products, delivery, installation, labor, insurance, payroll, taxes, bonding and equipment rental will be included in Allowance Expenditure Directive authorizing expenditure of funds from the Allowance. No overhead and profit shall be added to the Allowance Expenditure Directive unless Allowance was included in the Contract Price after mark-up ("below the line"). Allowance will only be treated as "below the line" if shown in the Bid Documents and the Bid Documents are escrowed.

Any unused portion of the Allowance, and related mark-up if Allowance was included above the line, will revert to the District documented by a deductive Change Order. Contractor authorizes the District to execute a unilateral deductive Change Order at or near the end of the Project for all or any portion of the Allowance not allocated.

17.5.5 Unknown and/or Unforeseen Conditions

Separate from what is provided in the Allowance, if Contractor requests an increase in Contract Price and/or Contract Time that is based at least partially on Contractor's assertion that Contractor has encountered unknown and/or unforeseen condition(s) on the Project, then Contractor shall base the PCO on provable information that, beyond a reasonable doubt and to the District's satisfaction, demonstrates that the unknown and/or unforeseen condition(s) were actually unknown and/or unforeseen and that the condition(s) were reasonably unknown and/or unforeseen. If not, the District shall deny the PCO as unsubstantiated, and the Contractor shall complete the Project without any increase in Contract Price and/or Contract Time based on that PCO.

17.5.6 Time to Submit Proposed Change Order

Contractor shall submit its PCO, using Document 00 63 57 (Proposed Change Order Form), within five (5) working days of the date Contractor discovers, or reasonably should have discovered, the circumstances giving rise to the PCO, unless additional time to submit a PCO is granted in writing by the District. Time is of the essence in Contractor's submission of PCOs so that the District can promptly investigate the basis for the PCO. Accordingly, if Contractor fails to submit its PCO within this timeframe, Contractor waives, releases, and discharges any right to assert or claim any entitlement to an adjustment of the Contract Price and/or Time based on circumstances giving rise to the PCO.

17.5.7 Proposed Change Order Certification

In submitting a PCO, Contractor certifies and affirms that the cost and/or time request is submitted in good faith, that the cost and/or time request is accurate and in accordance with the provisions of the Contract Documents, and the Contractor submits the cost and/or request for extension of time recognizing the significant civil penalties and treble damages which follow from making a false claim or presenting a false claim under Government Code section 12650 et seq.

It is expressly understood that the value of the extra Work or changes expressly includes any and all of the Contractor's costs and expenses, direct and indirect, resulting from additional time required on the Project or resulting from delay to the Project including, without limitation, cumulative impacts. Contractor is not entitled to separately recover amounts for overhead or other indirect costs. Any costs, expenses, damages, or time extensions not included are deemed waived.

[THE REMAINDER OF THIS PAGE LEFT BLANK INTENTIONALLY]

17.6 Format for Proposed Change Order

17.6.1 The following format shall be used as applicable by the District and the Contractor (e.g. Change Orders, PCO's) to communicate proposed additions and deductions to the Contract, supported by attached documentation. Any spaces left blank will be deemed no change to cost or time.

	WORK PERFORMED OTHER THAN BY CONTRACTOR	**ADD**	**DEDUCT**
(a)	**Material** (attach suppliers' invoice or itemized quantity and unit cost plus sales tax)		
(b)	**Add Labor** (attach itemized hours and rates, fully Burdened, and specify the hourly rate for each additional labor burden, for example, payroll taxes, fringe benefits, etc.)		
(c)	**Add Equipment** (attach suppliers' invoice)		
(d)	**Subtotal**		
(e)	**Add Overhead and Profit for any and all Tiers of Subcontractor**, the total not to exceed ten percent (10%) of Item (d)		
(f)	**Subtotal**		
(g)	**Add General Conditions Cost** (if Time is Compensable) (attach supporting documentation)		
(h)	**Subtotal**		
(i)	**Add Overhead and Profit for Contractor**, not to exceed five percent (5%) of Item (h)		
(j)	**Subtotal**		
(k)	**Add Bond and Insurance**, not to exceed two and one-half percent (2.5%) of Item (j)		
(l)	**TOTAL**		
(m)	**Time** (zero unless indicated; "TBD" not permitted)	_____**Calendar Days**	

[REMAINDER OF THIS PAGE LEFT BLANK INTENTIONALLY]

	WORK PERFORMED BY CONTRACTOR	**ADD**	**DEDUCT**
(a)	**Material** (attach itemized quantity and unit cost plus sales tax)		
(b)	**Add Labor** (attach itemized hours and rates, fully Burdened, and specify the hourly rate for each additional labor burden, for example, payroll taxes, fringe benefits, etc.)		
(c)	**Add Equipment** (attach suppliers' invoice)		
(d)	**Add General Conditions Cost** (if Time is Compensable) (attach supporting documentation)		
(e)	**Subtotal**		
(f)	**Add Overhead and Profit for Contractor**, not to exceed fifteen percent (15%) of Item (e)		
(g)	**Subtotal**		
(h)	**Add Bond and Insurance**, not to exceed two and one-half percent (2.5%) of Item (g)		
(i)	**TOTAL**		
(j)	**Time** (zero unless indicated; "TBD" not permitted)	**_____Calendar Days**	

17.6.2 Mandatory Use of Forms. Contractor shall only submit PCOs by completing Document 00 63 57 (Proposed Change Order Form). Contractor acknowledges and agrees that use of this specific and consistent format is essential to District's evaluation of PCOs. Accordingly, Contractor waives, releases, and discharges any right to assert or claim any entitlement to an adjustment of the Contract Price and/or Time for any purported PCO that does not comply with Document 00 63 57 (Proposed Change Order Form).

17.6.3 Labor. Contractor shall be compensated for the costs of labor actually and directly utilized in the performance of the Work. Such labor costs shall be the actual cost, use of any formulas (e.g. labor factors) is not allowed, not to exceed prevailing wage rates established by the bid advertisement date or when the Contract was awarded, whichever is applicable, in the locality of the Site and shall be in the labor classification(s) necessary for the performance of the Work, fully Burdened. Labor costs shall exclude costs incurred by the Contractor in preparing estimate(s) of the costs of the change in the Work, in the maintenance of records relating to the costs of the change in the Work, coordination and assembly of materials and information relating to the change in the Work or performance thereof, or the supervision and other overhead and general conditions costs associated with the change in the Work or performance thereof, including but not limited to the cost for the job superintendent. If applicable, District will pay Contractor the reasonable costs for room and board, supported with appropriate backup documentation, without markup for profit or overhead as provided by U.S. General Services Administration per diem rates for California lodging, meals and incidentals, https://www.gsa.gov/travel/plan-book/per-diem-rates/per-diem-rates-lookup.

17.6.4 Materials. Contractor shall be compensated for the costs of materials necessarily and actually used or consumed in connection with the performance of the change in the Work. Costs of materials may include reasonable costs of transportation from a source closest to the Site of the Work and delivery to the Site. If discounts by material suppliers are available for materials necessarily used in the performance of the change in the Work, they shall be credited to the District. If materials necessarily used in the performance of the change in the Work are obtained from a supplier or source owned in whole or in part by the Contractor, compensation therefor shall not exceed the current wholesale price for such materials. If, in the reasonable opinion of the District, the costs asserted by the Contractor for materials in connection with any change in the Work are excessive, or if the Contractor fails to provide satisfactory evidence of the actual costs of such materials from its supplier or vendor of the same, the costs of such materials and the District's obligation to pay for the same shall be limited to the then lowest wholesale price at which similar materials are available in the quantities required to perform the change in the Work. The District may elect to furnish materials for the change in the Work, in which event the Contractor shall not be compensated for the costs of furnishing such materials or any mark-up thereon.

17.6.5 Equipment. As a precondition to the District's duty to pay for Equipment rental or loading and transportation, Contractor shall provide satisfactory evidence of the actual costs of Equipment from the supplier, vendor or rental agency of same. Contractor shall be compensated for the actual cost of the necessary and direct use of Equipment in the performance of the change in the Work. Use of such Equipment in the performance of the change in the Work shall be compensated in increments of fifteen (15) minutes. Rental time for Equipment moved by its own power shall include time required to move such Equipment to the site of the Work from the nearest available rental source of the same. If Equipment is not moved to the Site by its own power, Contractor will be compensated for the loading and transportation costs in lieu of rental time. The foregoing notwithstanding, neither moving time or loading and transportation time shall be allowed if the Equipment is used for performance of any portion of the Work other than the change in the Work. Unless prior approval in writing is obtained by the Contractor from the Architect, the Project Inspector and the District, no costs or compensation shall be allowed for time while Construction Equipment is inoperative, idle or on standby, for any reason. Contractor shall not be entitled to an allowance or any other compensation for Equipment or tools used in the performance of change in the Work where such Equipment or tools have a replacement value of $500.00 or less. Equipment costs claimed by the Contractor in connection with the performance of any Work shall not exceed rental rates established by distributors or construction equipment rental agencies in the locality of the Site; any costs asserted which exceed such rental rates shall not be allowed or paid. Unless otherwise specifically approved in writing by the Architect, the Project Inspector and the District, the allowable rate for the use of Equipment in connection with the Work shall constitute full compensation to the Contractor for the cost of rental, fuel, power, oil, lubrication, supplies, necessary attachments, repairs or maintenance of any kind, depreciation, storage, insurance, labor (exclusive of labor costs of the Equipment operator), and any and all other costs incurred by the Contractor incidental to the use of such Equipment.

17.6.6 General Conditions Cost. The phrase "General Conditions Cost" shall mean, other than expressly limited or excluded herein, the costs of Contractor during the construction phase, including but not limited to: payroll costs for project

manager for Work conducted at the Site, payroll costs for the superintendent and full-time general foremen, workers not included as direct labor costs engaged in support functions (e.g., loading/unloading, clean-up), costs of offices and temporary facilities including office materials, office supplies, office equipment, minor expenses, utilities, fuel, sanitary facilities and telephone services at the Site, costs of consultants not in the direct employ of Contractor or Subcontractors, and fees for permits and licenses.

17.6.7 Overhead and Profit. The phrase "Overhead and Profit" shall include field and office supervisors and assistants, watchperson, use of small tools, consumable, insurance other than construction bonds and insurance required herein, general conditions costs and home office expenses.

17.7 Change Order Certification

17.7.1 All Change Orders and PCOs include the following certification by the Contractor, either in the form specifically or incorporated by this reference:

17.7.1.1 The undersigned Contractor approves the foregoing as to the changes, if any, to the Contract Price specified for each item, and as to the extension of time allowed, if any, for completion of the entire Work as stated herein, and agrees to furnish all labor, materials, and service, and perform all work necessary to complete any additional work specified for the consideration stated herein. Submission of sums which have no basis in fact or which Contractor knows are false are at the sole risk of Contractor and may be a violation of the False Claims Act set forth under Government Code section 12650 et seq. It is understood that the changes herein to the Contract shall only be effective when approved by the governing board of the District.

17.7.1.2 It is expressly understood that the value of the extra Work or changes expressly includes any and all of the Contractor's costs and expenses, direct and indirect, resulting from additional time required on the Project or resulting from delay to the Project including, without limitation, cumulative impacts. Contractor is not entitled to separately recover amounts for overhead or other indirect costs. Any costs, expenses, damages, or time extensions not included are deemed waived.

17.7.2 Accord and Satisfaction: Contractor's execution of any Change Order shall constitute a full accord and satisfaction, and release, of all Contractor (and if applicable, Subcontractor) claims for additional time, money or other relief arising from or relating to the subject matter of the change including, without limitation, impacts of all types, cumulative impacts, inefficiency, overtime, delay and any other type of claim.

17.7.3 Mandatory Use of Forms. Contractor shall only submit Change Orders by completing Document 00 63 63 (Change Order Form). Contractor acknowledges and agrees that use of this specific and consistent format is essential to District's processing of Change Orders. Accordingly, Contractor waives, releases, and discharges any right to assert or claim any entitlement to an adjustment of the Contract Price and/or Time for any change that does not comply with Document 00 63 63 (Change Order Form).

17.8 Determination of Change Order Cost

17.8.1 The amount of the increase or decrease in the Contract Price from a Change Order, if any, shall be determined in one or more of the following ways as applicable to a specific situation and at the District's discretion:

17.8.1.1 District acceptance of a PCO;

17.8.1.2 By unit prices contained in Contractor's original bid;

17.8.1.3 By agreement between District and Contractor.

17.8.2 Mark-up for overhead and profit and bonds and insurance shall be based on the net increase or decrease to the Contract Price; Contractor shall not split Change Orders to artificially increase markup and/or decrease credit.

17.9 Deductive Change Orders

All deductive Change Order(s) must be prepared pursuant to the provisions herein. Where a portion of the Work is deleted from the Contract, the reasonable value of the deducted work less the value of work performed shall be considered the appropriate deduction. The value submitted on the Schedule of Values shall be used to calculate the credit amount unless the bid documentation is being held in escrow as part of the Contract Documents. Unit Prices, if any, may be used in District's discretion in calculating reasonable value. If Contractor offers a proposed amount for a deductive Change Order(s), Contractor shall include a minimum of five percent (5%) total profit and overhead to be deducted with the amount of the work of the Change Order(s). If Subcontractor work is involved, Subcontractors shall also include a minimum of ten percent (10%) profit and overhead to be deducted with the amount of its deducted work. Any deviation from this provision shall not be allowed.

17.10 Addition or Deletion of Alternate Bid Item(s)

If the Bid Form and Proposal includes proposal(s) for Alternate Bid Item(s), during Contractor's performance of the Work, the District may elect to add or delete any such Alternate Bid Item(s) if not included in the Contract at the time of award. If the District elects to add or delete Alternate Bid Item(s) after Contract award, the cost or credit for such Alternate Bid Item(s) shall be as set forth in the Bid Form and Proposal unless the parties agree to a different price and the Contract Time shall be adjusted by the number of days allocated in the Contract Documents. If days are not allocated in the Contract Documents, the Contract Time shall be equitably adjusted.

17.11 Discounts, Rebates, and Refunds

For purposes of determining the cost, if any, of any change, addition, or omission to the Work hereunder, all trade discounts, rebates, refunds, and all returns from the sale of surplus materials and equipment shall accrue and be credited to the Contractor, and the Contractor shall make provisions so that such discounts, rebates, refunds, and returns may be secured, and the amount thereof shall be allowed as a reduction of the Contractor's cost in determining the actual cost of construction for purposes of any change, addition, or omission in the Work as provided herein.

17.12 Construction Change Directives

17.12.1 A Construction Change Directive is a written order prepared and issued by the District, the Construction Manager, and/or the Architect and signed by the District and the Architect, directing a change in the Work. The District may, as provided by law, by Construction Change Directive and without invalidating the Contract, order changes in the Work consisting of additions, deletions, or other revisions. The adjustment to the Contract Price or Time, if any, is subject to the provisions of this section regarding Changes in the Work. If all or a portion of the Project is being funded by funds requiring approval by the State Allocation Board ("SAB"), these revisions may be subject to compensation once approval of same is received and funded by the SAB, and funds are released by the Office of Public School Construction ("OPSC"). Any dispute as to the adjustment in the Contract Price, if any, of the Construction Change Directive or timing of payment shall be resolved pursuant to the Payments and Claims Process provisions herein.

17.12.2 The District may issue a Construction Change Directive in the absence of agreement on the terms of a Change Order.

17.13 Force Account Directives

17.13.1 When work, for which a definite price has not been agreed upon in advance, is to be paid for on a force account basis, all direct costs necessarily incurred and paid by the Contractor for labor, material, and equipment used in the performance of that Work, shall be subject to the approval of the District and compensation will be determined as set forth herein.

17.13.2 The District will issue a Force Account Directive to proceed with the Work on a force account basis, and a not-to-exceed budget will be established by the District.

17.13.3 All requirements regarding direct cost for labor, labor burden, material, equipment, and markups on direct costs for overhead and profit described in this section shall apply to Force Account Directives. However, the District will only pay for actual costs verified in the field by the District or its authorized representative(s) on a daily basis.

17.13.4 The Contractor shall be responsible for all cost related to the administration of Force Account Directive. The markup for overhead and profit for Contractor modifications shall be full compensation to the Contractor to administer Force Account Directive, and Contractor shall not be entitled to separately recover additional amounts for overhead and/or profit.

17.13.5 The Contractor shall notify the District or its authorized representative(s) at least twenty-four (24) hours prior to proceeding with any of the force account work. Furthermore, the Contractor shall notify the District when it has consumed eighty percent (80%) of the budget, and shall not exceed the budget unless specifically authorized in writing by the District. The Contractor will not be compensated for force account work in the event that the Contractor fails to timely notify the District regarding the commencement of force account work, or exceeding the force account budget.

17.13.6 The Contractor shall diligently proceed with the work, and on a daily basis, submit a daily force account report using Document 00 63 47, "Daily Force Account Report," no later than 5:00 p.m. each day. The report shall contain a detailed itemization of the daily labor, material, and equipment used on the force account work only. The names of the individuals performing the force account work shall be included on the daily force account reports. The type and model of equipment shall be identified and listed. The District will review the information contained in the reports, and sign the reports no later than the next work day, and return a copy of the report to the Contractor for their records. The District will not sign, nor will the Contractor receive compensation for work the District cannot verify. The Contractor will provide a weekly force account summary indicating the status of each Force Account Directive in terms of percent complete of the not-to-exceed budget and the estimated percent complete of the work.

17.13.7 In the event the Contractor and the District reach a written agreement on a set cost for the work while the work is proceeding based on a Force Account Directive, the Contractor's signed daily force account reports shall be discontinued, and all previously signed reports shall be invalid.

17.14 Accounting Records

With respect to portions of the Work performed by Change Orders and Construction Change Directives, the Contractor shall keep and maintain cost-accounting records satisfactory to the District, including, without limitation, Job Cost Reports as provided in these General Conditions, which shall be available to the District on the same terms as any other books and records the Contractor is required to maintain under the Contract Documents. Such records shall include without limitation hourly records for Labor and Equipment and itemized records of materials and Equipment used that day in connection with the performance of any Work. All records maintained hereunder shall be subject to inspection, review and/or reproduction by the District, the Architect or the Project Inspector upon request. In the event that the Contractor fails or refuses, for any reason, to maintain or make available for inspection, review and/or reproduction such records, the District's reasonable good faith determination of the extent of adjustment to the Contract Price shall be final, conclusive, dispositive and binding upon Contractor.

17.15 Notice Required

If the Contractor desires to make a claim for an increase in the Contract Price, or any extension in the Contract Time for completion, it shall notify the District pursuant to the provisions herein including, without limitation, Article 25 Claims Process provisions. No claim shall be considered unless made in accordance with this subparagraph. Contractor shall proceed to execute the Work even though the adjustment may not have been agreed upon. Any change in the Contract Price or extension of the Contract Time resulting from such claim shall be authorized by a Change Order.

17.16 Applicability to Subcontractors

Any requirements under this Article shall be equally applicable to Change Orders or Construction Change Directives issued to Subcontractors by the Contractor to the extent as required by the Contract Documents.

17.17 Alteration to Change Order Language

Contractor shall not alter Change Orders or reserve time in Change Orders. Change Orders altered in violation of this provision, if in conflict with the terms set forth herein, shall be construed in accordance with the terms set forth herein. Contractor shall execute finalized Change Orders and proceed under the provisions herein with proper notice.

17.18 Failure of Contractor to Execute Change Order

Contractor shall be in default of the Contract if Contractor fails to execute a Change Order when the Contractor agrees with the addition and/or deletion of the Work in that Change Order.

18. REQUEST FOR INFORMATION

18.1 Any Request for Information shall reference all applicable Contract Document(s), including Specification section(s), detail(s), page number(s), drawing number(s), and sheet number(s), etc. The Contractor shall make suggestions and interpretations of the issue raised by each Request for Information. A Request for Information cannot modify the Contract Price, Contract Time, or the Contract Documents. Upon request by the District, Contractor shall provide an electronic copy of the Request for Information in addition to the hard copy.

18.2 The Contractor shall be responsible for any costs incurred for professional services that District may deduct from any amounts owing to the Contractor, if a Request for Information requests an interpretation or decision of a matter where the information sought is equally available to the party making the request. District, at its sole discretion, shall deduct from and/or invoice Contractor for all the professional services arising herein.

19. PAYMENTS

19.1 Contract Price

The Contract Price is stated in the Agreement and, including authorized adjustments, is the total amount payable by the District to the Contractor for performance of the Work under the Contract Documents.

19.2 Applications for Progress Payments

19.2.1 Procedure for Applications for Progress Payments

19.2.1.1 Application for Progress Payment

19.2.1.1.1 Not before the fifth (5th) day of each calendar month during the progress of the Work, Contractor shall submit to the District and the Architect an itemized Application for Payment for operations completed in accordance with the Schedule of Values. Such application shall be notarized, if required by District, and supported by the following or each portion thereof unless waived by the District in writing:

19.2.1.1.1.1 The amount paid to the date of the Application to the Contractor, to all its Subcontractors, and all others furnishing labor, material, or equipment for its Contract;

19.2.1.1.1.2 The amount being requested under the Application for Payment by the Contractor on its own behalf and separately stating the amount requested on behalf of each of the Subcontractors and all others furnishing labor, material, and equipment under the Contract;

19.2.1.1.1.3 The balance that will be due to each of such entities after said payment is made;

19.2.1.1.1.4 A certification that the As-Built Drawings and annotated Specifications are current;

19.2.1.1.1.5 Itemized breakdown of work done for the purpose of requesting partial payment;

19.2.1.1.1.6 An updated and acceptable construction schedule in conformance with the provisions herein;

19.2.1.1.1.7 The additions to and subtractions from the Contract Price and Contract Time;

19.2.1.1.1.8 A total of the retentions held;

19.2.1.1.1.9 Material invoices, evidence of equipment purchases, rentals, and other support and details of cost as the District may require from time to time;

19.2.1.1.1.10 The percentage of completion of the Contractor's Work by line item;

19.2.1.1.1.11 Schedule of Values updated from the preceding Application for Payment;

19.2.1.1.1.12 A duly completed and executed conditional waiver and release upon progress payment compliant with Civil Code section 8132 from the Contractor and each subcontractor of any tier and supplier to be paid from the current progress payment;

19.2.1.1.1.13 A duly completed and executed unconditional waiver and release upon progress payment compliant with Civil Code section 8134 from the Contractor and each subcontractor of any tier and supplier that was paid from the previous progress payment(s); and

19.2.1.1.1.14 A certification by the Contractor of the following:

The Contractor warrants title to all Work performed as of the date of this payment application has been completed in accordance with the Contract Documents for the Project. The Contractor further warrants that all amounts have been paid for work which previous Certificates for Payment

were issued and payments received and all Work performed as of the date of this payment application is free and clear of liens, claims, security interests, or encumbrances in favor of the Contractor, Subcontractors, material and equipment suppliers, workers, or other persons or entities making a claim by reason of having provided labor, materials, and equipment relating to the Work, except those of which the District has been informed. Submission of sums which have no basis in fact or which Contractor knows are false are at the sole risk of Contractor and may be a violation of the False Claims Act set forth under Government Code section 12650 et seq.

19.2.1.1.1.15 The Contractor shall be subject to the False Claims Act set forth in Government Code section 12650 et seq. for information provided with any Application for Progress Payment.

19.2.1.1.1.16 All remaining certified payroll records ("CPR(s)") for each journeyman, apprentice, worker, or other employee employed by the Contractor and/or each Subcontractor in connection with the Work for the period of the Application for Payment. As indicated herein, the District shall not make any payment to Contractor until:

19.2.1.1.1.16.1 Contractor and/or its Subcontractor(s) provide electronic CPRs directly to the DIR on no less than every 30 days while Work is being performed and within 30 days after the final day of Work performed on the Project for any journeyman, apprentice, worker or other employee was employed in connection with the Work, or within ten (10) days of any request by the District or the DIR to the requesting entity, and

19.2.1.1.1.16.2 Any delay in Contractor and/or its Subcontractor(s) providing CPRs in a timely manner may directly delay the Contractor's payment.

19.2.1.1.2 Applications received after June 20th will not be paid until the second week of July and applications received after December 12th will not be paid until the first week of January.

19.2.2 <u>Prerequisites for Progress Payments</u>

19.2.2.1 <u>First Payment Request</u>: The following items, if applicable, must be completed before the District will accept and/or process the Contractor's first payment request:

19.2.2.1.1 Installation of the Project sign;

19.2.2.1.2 Installation of field office;

19.2.2.1.3 Installation of temporary facilities and fencing;

19.2.2.1.4 Schedule of Values;

19.2.2.1.5 Contractor's Construction Schedule;

19.2.2.1.6 Schedule of unit prices, if applicable;

19.2.2.1.7 Submittal Schedule;

19.2.2.1.8 Receipt by Architect of all submittals due as of the date of the payment application;

19.2.2.1.9 Copies of necessary permits;

19.2.2.1.10 Copies of authorizations and licenses from governing authorities;

19.2.2.1.11 Initial progress report;

19.2.2.1.12 Surveyor qualifications;

19.2.2.1.13 Written acceptance of District's survey of rough grading, if applicable;

19.2.2.1.14 List of all Subcontractors, with names, license numbers, telephone numbers, and Scope of Work;

19.2.2.1.15 All bonds and insurance endorsements; and

19.2.2.1.16 Resumes of Contractor's project manager, and if applicable, job site secretary, record documents recorder, and job site superintendent.

19.2.2.2 <u>Second Payment Request</u>: The District will not process the second payment request until and unless all submittals and Shop Drawings have been accepted for review by the Architect.

19.2.2.3 <u>No Waiver of Criteria</u>: Any payments made to Contractor where criteria set forth herein have not been met shall not constitute a waiver of said criteria by District. Instead, such payment shall be construed as a good faith effort by District to resolve differences so Contractor may pay its Subcontractors and suppliers. Contractor agrees that failure to submit such items may constitute a breach of contract by Contractor and may subject Contractor to termination.

19.3 <u>Progress Payments</u>

19.3.1 <u>District's Approval of Application for Payment</u>

19.3.1.1 Upon receipt of an Application for Payment, The District shall act in accordance with both of the following:

19.3.1.1.1 Each Application for Payment shall be reviewed by the District as soon as practicable after receipt for the purpose of determining that the Application for Payment is a proper Application for Payment.

19.3.1.1.2 Any Application for Payment determined not to be a proper Application for Payment suitable for payment shall be returned to the Contractor as soon as practicable, but not later than seven (7) days, after

receipt. An Application for Payment returned pursuant to this paragraph shall be accompanied by a document setting forth in writing the reasons why the Application for Payment is not proper. The number of days available to the District to make a payment without incurring interest pursuant to this section shall be reduced by the number of days by which the District exceeds this seven-day return requirement.

19.3.1.1.3 An Application for Payment shall be considered properly executed if funds are available for payment of the Application for Payment, and payment is not delayed due to an audit inquiry by the financial officer of the District.

19.3.1.2 The District's review of the Contractor's Application for Payment will be based on the District's and the Architect's observations at the Site and the data comprising the Application for Payment that the Work has progressed to the point indicated and that, to the best of the District's and the Architect's knowledge, information, and belief, the quality of the Work is in accordance with the Contract Documents. The foregoing representations are subject to:

19.3.1.2.1 Observation of the Work for general conformance with the Contract Documents,

19.3.1.2.2 Results of subsequent tests and inspections,

19.3.1.2.3 Minor deviations from the Contract Documents correctable prior to completion, and

19.3.1.2.4 Specific qualifications expressed by the Architect.

19.3.1.3 District's approval of the certified Application for Payment shall be based on Contractor complying with all requirements for a fully complete and valid certified Application for Payment.

19.3.2 <u>Payments to Contractor</u>

19.3.2.1 Within thirty (30) days after approval of the Application for Payment, Contractor shall be paid a sum equal to ninety-five percent (95%) of the value of the Work performed (as verified by Architect and Inspector and certified by Contractor) up to the last day of the previous month, less the aggregate of previous payments and amount to be withheld. The value of the Work completed shall be Contractor's best estimate. No inaccuracy or error in said estimate shall operate to release the Contractor, or any Surety upon any bond, from damages arising from such Work, or from the District's right to enforce each and every provision of this Contract, and the District shall have the right subsequently to correct any error made in any estimate for payment.

19.3.2.2 The Contractor shall not be entitled to have any payment requests processed or be entitled to have any payment made for Work performed, so long as any lawful or proper direction given by the District concerning the Work, or any portion thereof, remains incomplete.

19.3.2.3 If the District fails to make any progress payment within thirty (30) days after receipt of an undisputed and properly submitted Application for Payment from the Contractor, the District shall pay interest to the Contractor equivalent to the legal rate set forth in subdivision (a) of Section 685.010 of the Code of Civil Procedure.

19.3.3 <u>No Waiver</u>

No payment by District hereunder shall be interpreted so as to imply that District has inspected, approved, or accepted any part of the Work. Notwithstanding any payment, the District may enforce each and every provision of this Contract. The District may correct or require correction of any error subsequent to any payment.

19.4 <u>Decisions to Withhold Payment</u>

19.4.1 <u>Reasons to Withhold Payment</u>

The District may withhold payment in whole, or in part, to the extent reasonably necessary to protect the District if, in the District's opinion, the representations to the District required herein cannot be made. The District may withhold payment, in whole, or in part, to such extent as may be necessary to protect the District from loss because of, but not limited to any of the following:

19.4.1.1 Defective Work not remedied within **<u>FORTY-EIGHT (48)</u>** hours of written notice to Contractor.

19.4.1.2 Stop Payment Notices or other liens served upon the District as a result of the Contract. Contractor agrees that the District may withhold up to 125% of the amount claimed in the Stop Payment Notice to answer the claim and to provide for the District's reasonable cost of any litigation pursuant to the stop payment notice.

19.4.1.3 Written notice to withhold payment from Contractor by payment and/or performance bond surety(ies).

19.4.1.4 Liquidated damages assessed against the Contractor.

19.4.1.5 The cost of completion of the Contract if there exists a reasonable doubt that the Work can be completed for the unpaid balance of the Contract Price or by the completion date.

19.4.1.6 Damage to the District or other contractor(s).

19.4.1.7 Unsatisfactory prosecution of the Work by the Contractor.

19.4.1.8 Failure to store and properly secure materials.

19.4.1.9 Failure of the Contractor to submit, on a timely basis, proper, sufficient, and acceptable documentation required by the Contract Documents, including, without limitation, a Construction Schedule, Schedule of Submittals, Schedule of Values, Monthly Progress Schedules, Shop Drawings, Product Data

and samples, Proposed product lists, executed Change Orders, and/or verified reports.

19.4.1.10 Failure of the Contractor to maintain As-Built Drawings.

19.4.1.11 Erroneous estimates by the Contractor of the value of the Work performed, or other false statements in an Application for Payment.

19.4.1.12 Unauthorized deviations from the Contract Documents.

19.4.1.13 Failure of the Contractor to prosecute the Work in a timely manner in compliance with the Construction Schedule, established progress schedules, and/or completion dates.

19.4.1.14 Failure to provide acceptable electronic certified payroll records, as required by the Labor Code, by these Contract Documents, or by written request; for each journeyman, apprentice, worker, or other employee employed by the Contractor and/or by each Subcontractor in connection with the Work for the period of the Application for Payment or if payroll records are delinquent or inadequate.

19.4.1.15 Failure to properly pay prevailing wages as required in Labor Code section 1720 et seq., failure to comply with any other Labor Code requirements, and/or failure to comply with labor compliance monitoring and enforcement by the DIR.

19.4.1.16 Allowing an unregistered subcontractor, as described in Labor Code section 1725.5, to engage in the performance of any work under this Contract.

19.4.1.17 Failure to comply with any applicable federal statutes and regulations regarding minimum wages, withholding, payrolls and basic records, apprentice and trainee employment requirements, equal employment opportunity requirements, Copeland Act requirements, Davis-Bacon Act and related requirements, Contract Work Hours and Safety Standards Act requirements, if applicable.

19.4.1.18 Failure to properly maintain or clean up the Site.

19.4.1.19 Failure to timely indemnify, defend, or hold harmless the District.

19.4.1.20 Any payments due to the District, including but not limited to payments for failed tests, utilities changes, or permits.

19.4.1.21 Failure to pay Subcontractor(s) or supplier(s) as required by law and by the Contract Documents.

19.4.1.22 Failure to pay any royalty, license or similar fees.

19.4.1.23 Contractor is otherwise in breach, default, or in substantial violation of any provision of this Contract.

19.4.1.24 Failure to perform any implementation and/or monitoring required by any SWPPP for the Project and/or the imposition of any penalties or fines therefore whether imposed on the District or Contractor.

19.4.2 Reallocation of Withheld Amounts

19.4.2.1 District may, in its discretion, apply any withheld amount to pay outstanding claims or obligations as defined herein. In so doing, District shall make such payments on behalf of Contractor. If any payment is so made by District, then that amount shall be considered a payment made under Contract by District to Contractor and District shall not be liable to Contractor for any payment made in good faith. These payments may be made without prior judicial determination of claim or obligation. District will render Contractor an accounting of funds disbursed on behalf of Contractor.

19.4.2.2 If Contractor defaults or neglects to carry out the Work in accordance with the Contract Documents or fails to perform any provision thereof, District may, after **FORTY-EIGHT (48)** hours' written notice to the Contractor and, without prejudice to any other remedy, make good such deficiencies. The District shall adjust the total Contract Price by reducing the amount thereof by the cost of making good such deficiencies. If District deems it inexpedient to correct Work that is damaged, defective, or not done in accordance with Contract provisions, an equitable reduction in the Contract Price (of at least one hundred fifty percent (150%) of the estimated reasonable value of the nonconforming Work) shall be made therefor.

19.4.3 Payment After Cure

When Contractor removes the grounds for declining approval, payment shall be made for amounts withheld because of them. No interest shall be paid on any retainage or amounts withheld due to the failure of the Contractor to perform in accordance with the terms and conditions of the Contract Documents.

19.5 Subcontractor Payments

19.5.1 Payments to Subcontractors

No later than seven (7) days after receipt, or pursuant to Business and Professions Code section 7108.5 and Public Contract Code section 7107, the Contractor shall pay to each Subcontractor, out of the amount paid to the Contractor on account of such Subcontractor's portion of the Work, the amount to which said Subcontractor is entitled. The Contractor shall, by appropriate agreement with each Subcontractor, require each Subcontractor to make payments to its Sub-subcontractors in a similar manner.

19.5.2 No Obligation of District for Subcontractor Payment

The District shall have no obligation to pay, or to see to the payment of, money to a Subcontractor except as may otherwise be required by law.

19.5.3 Joint Checks

District shall have the right in its sole discretion, if necessary for the protection of the District, to issue joint checks made payable to the Contractor and Subcontractors and/or material or equipment suppliers. The joint check payees shall be responsible for the allocation and disbursement of funds included as part of any such joint payment. In no event shall any joint check payment be construed to create any contract between the District and a Subcontractor of any tier, or a material or equipment supplier, any obligation from the District to such Subcontractor or a material or equipment supplier, or rights in such Subcontractor or a material or equipment supplier against the District.

20. COMPLETION OF THE WORK

20.1 Completion

20.1.1 District will accept completion of Contract and have the Notice of Completion recorded when the entire Work shall have been completed to the satisfaction of District.

20.1.2 The Work may only be accepted as complete by action of the governing board of the District.

20.1.3 District, at its sole option, may accept completion of Contract and have the Notice of Completion recorded when the entire Work shall have been completed to the satisfaction of District, except for minor corrective items, as distinguished from incomplete items. If Contractor fails to complete all minor corrective items within fifteen (15) days after the date of the District's acceptance of completion, District shall withhold from the final payment one hundred fifty percent (150%) of an estimate of the amount sufficient to complete the corrective items, as determined by District, until the item(s) are completed.

20.1.4 At the end of the 15-day period, if there are any items remaining to be corrected, District may elect to proceed as provided herein related to adjustments to Contract Price, and/or District's right to perform the Work of the Contractor.

20.2 Close-Out/Certification Procedures

20.2.1 Punch List

The Contractor shall notify the Architect when Contractor considers the Work complete. Upon notification, Architect will prepare a list of minor items to be completed or corrected ("Punch List"). The Contractor and/or its Subcontractors shall proceed promptly to complete and correct items on the Punch List. Failure to include an item on Punch List does not alter the responsibility of the Contractor to complete all Work in accordance with the Contract Documents.

20.2.2 Close-Out/Certification Requirements

20.2.2.1 Utility Connections

Buildings shall be connected to water, gas, sewer, and electric services, complete and ready for use. Service connections shall be made and existing services reconnected.

20.2.2.2 <u>Record Drawings and Record Specifications</u>

20.2.2.2.1 Contractor shall provide exact Record Drawings of the Work ("As-Builts") and Record Specifications upon completion of the Project and as a condition precedent to approval of final payment.

20.2.2.2.2 Contractor shall obtain the Inspector's approval of the corrected prints and employ a competent draftsman to transfer the Record Drawings information to the most current version of AutoCAD that is, at that time, currently utilized for plan check submission by either the District, the Architect, OPSC, and/or DSA, and print a complete set of transparent sepias. When completed, Contractor shall deliver to the District corrected sepias and data storage device acceptable to District with AutoCAD file.

20.2.2.2.3 Contractor is liable and responsible for any and all inaccuracies in the Record Drawings and Record Specifications, even if inaccuracies become evident at a future date.

20.2.2.3 <u>Construction Storm Water Permit, if applicable</u>

Contractor shall submit to District all electronic or hard copy records required by the Construction Storm Water Permit, if applicable, within seven (7) days of Completion of the Project.

20.2.2.4 <u>Spare Parts and Maintenance Manuals</u>:

20.2.2.4.1 Contractor shall provide products, spare parts, maintenance, and extra materials in quantities specified in the Specifications and in Manufacturer's recommendations.

20.2.2.4.2 Contractor shall prepare all operation and maintenance manuals and date as indicated in the Specifications.

20.2.2.5 <u>Instruction of District Personnel</u>:

20.2.2.5.1 Before final inspection, at agreed upon times, Contractor shall instruct District's designated personnel in operation, adjustment, and maintenance of products, equipment, and systems.

20.2.2.5.2 For equipment requiring seasonal operation, Contractor shall perform instructions for other seasons within six months or by the change of season.

20.2.2.5.3 Contractor shall use operation and maintenance manuals as basis for instruction. Contractor shall review contents of manual with personnel in detail to explain all aspects of operation and maintenance.

20.2.2.5.4 Contractor shall prepare and insert additional data in Operation and Maintenance Manual when the need for such data becomes apparent during instruction.

20.2.2.5.5 Contractor shall review contents of manual with personnel in detail to explain all aspects of operation and maintenance.

20.2.2.6 **Source Programming:** Contractor shall provide all source programming for all items in the Project.

20.2.2.7 **Verified Reports:** Contractor shall completely and accurately fill out and file forms DSA 6-C or DSA 152 (or current form), as appropriate. Refer to section 4-336 and section 4-343 of Part 1, Title 24 of the California Code of Regulations.

20.3 Final Inspection

20.3.1 Contractor shall comply with Punch List procedures as provided herein and maintain the presence of a Project superintendent and project manager until the Punch List is complete to ensure proper and timely completion of the Punch List. Under no circumstances shall Contractor demobilize its forces prior to completion of the Punch List without District's prior written approval. Upon receipt of Contractor's written notice that all of the Punch List items have been fully completed and the Work is ready for final inspection and District acceptance, Architect and Project Inspector will inspect the Work and shall submit to Contractor and District a final inspection report noting the Work, if any, required in order to complete in accordance with the Contract Documents. Absent unusual circumstances, this report shall consist of the Punch List items not yet satisfactorily completed.

20.3.2 Upon Contractor's completion of all items on the Punch List and any other uncompleted portions of the Work, the Contractor shall notify the District and Architect, who shall again inspect such Work. If the Architect finds the Work complete and acceptable under the Contract Documents, the Architect will notify Contractor, who shall then jointly submit to the Architect and the District its final Application for Payment.

20.3.3 Final Inspection Requirements

20.3.3.1 Before calling for final inspection, Contractor shall determine that the following have been performed:

20.3.3.1.1 The Work has been completed.

20.3.3.1.2 All life safety items are completed and in working order.

20.3.3.1.3 Mechanical and electrical Work including, without limitation, security system, data, and fire alarm, are complete and tested, fixtures are in place, connected, and ready for tryout.

20.3.3.1.4 Electrical circuits scheduled in panels and disconnect switches labeled.

20.3.3.1.5 Replace filters of operating equipment.

20.3.3.1.6 Painting and special finishes complete.

20.3.3.1.7 Doors complete with hardware, cleaned of protective film, relieved of sticking or binding, and in working order.

20.3.3.1.8 Tops and bottoms of doors sealed.

20.3.3.1.9 Floors waxed and polished as specified.

20.3.3.1.10 Carpeted and soft surfaces vacuumed.

20.3.3.1.11 Broken glass replaced and interior and exterior glass and all surfaces exposed to view cleaned.

20.3.3.1.12 Equipment and fixtures cleaned to a sanitary condition.

20.3.3.1.13 Grounds cleared of Contractor's equipment, raked clean of debris, and remove waste and surplus materials, rubbish, and construction facilities from the Site and surrounding areas.

20.3.3.1.14 Site cleaned, paved areas swept, and clean landscaped surfaces raked.

20.3.3.1.15 Roofs, gutters, down spouts, and drainage systems cleaned of debris.

20.3.3.1.16 Work cleaned, free of stains, scratches, and other foreign matter, and damaged and broken material replaced.

20.3.3.1.17 Temporary labels, tape, stains, and foreign substances removed, transparent and glossy surfaces polished,

20.3.3.1.18 Finished and decorative work shall have marks, dirt, and superfluous labels removed.

20.3.3.1.19 Final cleanup, as provided herein.

20.4 Costs of Multiple Inspections

More than two (2) requests of the District to make a final inspection shall be considered an additional service of District, Architect, Construction Manager, and/or Project Inspector, and all subsequent costs will be invoiced to Contractor and if funds are available, withheld from remaining payments.

20.5 Partial Occupancy or Use Prior to Completion

20.5.1 District's Rights to Occupancy

The District may occupy or use any completed or partially completed portion of the Work at any stage, and such occupancy shall not constitute the District's Final Acceptance of any part of the Work. Neither the District's Final Acceptance, the making of Final Payment, any provision in Contract Documents, nor the use or occupancy of the Work, in whole or in part, by District shall constitute acceptance of Work not in accordance with the Contract Documents nor relieve the Contractor or the Contractor's Performance Bond Surety from liability with respect to any warranties or responsibility for faulty or defective Work or materials, equipment and workmanship incorporated therein. In the event that the District occupies or uses

any completed or partially completed portion of the Work, the Contractor shall remain responsible for payments, security, maintenance, heat, utilities, damage to the Work, insurance, the period for correction of the Work, and the commencement of warranties required by the Contract Documents unless the Contractor requests in writing, and the District agrees, to otherwise divide those responsibilities. Any dispute as to responsibilities shall be resolved pursuant to the Claims Process provisions herein, with the added provision that during the dispute process, the District shall have the right to occupy or use any portion of the Work that it needs or desires to use.

20.5.2 Inspection Prior to Occupancy or Use

Immediately prior to partial occupancy or use, the District, the Contractor, and the Architect shall jointly inspect the area to be occupied or portion of the Work to be used in order to determine and record the condition of the Work.

20.5.3 No Waiver

Unless otherwise agreed upon, partial or entire occupancy or use of a portion or portions of the Work shall not constitute beneficial occupancy or District's acceptance of the Work not complying with the requirements of the Contract Documents.

21. FINAL PAYMENT AND RETENTION

21.1 Final Payment

Upon receipt and approval of a valid and final Application for Payment, the Architect will issue a final Certificate of Payment. The District shall thereupon jointly inspect the Work and either accept the Work as complete or notify the Architect and the Contractor in writing of reasons why the Work is not complete. Upon District's acceptance of the Work of the Contractor as fully complete by the Governing Board of the District (that, absent unusual circumstances, will occur when the Punch List items have been satisfactorily completed), the District shall record a Notice of Completion with the County Recorder, and the Contractor shall, upon receipt of final payment from the District, pay the amount due Subcontractors.

21.2 Prerequisites for Final Payment

The following conditions must be fulfilled prior to Final Payment:

21.2.1 A full release of all Stop Payment Notices served in connection with the Work shall be submitted by Contractor.

21.2.2 A duly completed and executed conditional waiver and release upon final payment compliant with Civil Code section 8136, from the Contractor and each subcontractor of any tier and supplier to be paid from the final payment.

21.2.3 A duly completed and executed unconditional waiver and release upon progress payment compliant with Civil Code section 8134, from the Contractor and each subcontractor of any tier and supplier that was paid from the previous progress payments.

21.2.4 A duly completed and executed Document 00 65 19.26, "AGREEMENT AND RELEASE OF ANY AND ALL CLAIMS" from the Contractor.

21.2.5 The Contractor shall have made all corrections to the Work that are required to remedy any defects therein, to obtain compliance with the Contract Documents or any requirements of applicable codes and ordinances, or to fulfill any of the orders or directions of District required under the Contract Documents.

21.2.6 Each Subcontractor shall have delivered to the Contractor all written guarantees, warranties, applications, and bonds required by the Contract Documents for its portion of the Work.

21.2.7 Contractor must have completed all requirements set forth under "Close-Out/Certification Procedures," including, without limitation, submission of an approved set of complete Record Drawings.

21.2.8 Architect shall have issued its written approval that final payment can be made.

21.2.9 The Contractor shall have delivered to the District all manuals and materials required by the Contract Documents, which must be approved by the District.

21.2.10 The Contractor shall have completed final clean-up as provided herein.

21.3 Retention

21.3.1 The retention, less any amounts disputed by the District or that the District has the right to withhold pursuant to provisions herein, shall be paid:

21.3.1.1 After approval by the Architect of the Application and Certificate of Payment,

21.3.1.2 After the satisfaction of the conditions set forth herein, and

21.3.1.3 After forty-five (45) days after the recording of the Notice of Completion by District.

21.3.2 No interest shall be paid on any retention, or on any amounts withheld due to a failure of the Contractor to perform, in accordance with the terms and conditions of the Contract Documents, except as provided to the contrary in any Escrow Agreement between the District and the Contractor pursuant to Public Contract Code section 22300.

21.4 Substitution of Securities

The District will permit the substitution of securities in accordance with the provisions of Public Contract Code section 22300.

22. UNCOVERING OF WORK

If a portion of the Work is covered without Inspector or Architect approval or not in compliance with the Contract Documents, it must, if required in writing by the District, the Project Inspector, or the Architect, be uncovered for the Project Inspector's or the Architect's observation and be corrected, replaced, and/or recovered at the Contractor's expense without change in the Contract Price or Contract Time.

23. NONCONFORMING WORK AND CORRECTION OF WORK

23.1 Nonconforming Work

23.1.1 Contractor shall promptly remove from Premises all Work identified by District as failing to conform to the Contract Documents whether incorporated or not. Contractor shall promptly replace and re-execute its own Work to comply with the Contract Documents without additional expense to the District and shall bear the expense of making good all work of other contractors destroyed or damaged by any removal or replacement pursuant hereto and/or any delays to the District or other Contractors caused thereby.

23.1.2 If Contractor does not remove Work that District has identified as failing to conform to the Contract Documents within a reasonable time, not to exceed **FORTY-EIGHT (48)** hours, District may remove it and may store any material at Contractor's expense. If Contractor does not pay expense(s) of that removal within ten (10) days' time thereafter, District may, upon ten (10) days' written notice, sell any material at auction or at private sale and shall deduct all costs and expenses incurred by the District and/or District may withhold those amounts from payment(s) to Contractor.

23.2 Correction of Work

23.2.1 Correction of Rejected Work

Pursuant to the notice provisions herein, the Contractor shall immediately correct the Work rejected by the District, the Architect, or the Project Inspector as failing to conform to the requirements of the Contract Documents, whether observed before or after Completion and whether or not fabricated, installed, or completed. The Contractor shall bear costs of correcting the rejected Work, including additional testing, inspections, and compensation for the Inspector's or the Architect's services and expenses made necessary thereby.

23.2.2 One-Year Warranty Corrections

If, within one (1) year after the date of Completion of the Work or a designated portion thereof, or after the date for commencement of warranties established hereunder, or by the terms of an applicable special warranty required by the Contract Documents, any of the Work is found to be not in accordance with the requirements of the Contract Documents, the Contractor shall correct it promptly after receipt of written notice from the District to do so. This period of one (1) year shall be extended with respect to portions of the Work first performed after Completion by the period of time between Completion and the actual performance of the Work. This obligation hereunder shall survive District's acceptance of the Work

under the Contract and termination of the Contract. The District shall give such notice promptly after discovery of the condition.

23.3 District's Right to Perform Work

23.3.1 If the Contractor should neglect to prosecute the Work properly or fail to perform any provisions of this contract, the District, after **FORTY-EIGHT (48)** hours' written notice to the Contractor, may, without prejudice to any other remedy it may have, make good such deficiencies and may deduct the cost thereof from the payment then or thereafter due the Contractor.

23.3.2 If it is found at any time, before or after completion of the Work, that Contractor has varied from the Drawings and/or Specifications, including, but not limited to, variation in material, quality, form, or finish, or in the amount or value of the materials and labor used, District may require at its option:

23.3.2.1 That all such improper Work be removed, remade or replaced, and all work disturbed by these changes be made good by Contractor at no additional cost to the District;

23.3.2.2 That the District deduct from any amount due Contractor the sum of money equivalent to the difference in value between the work performed and that called for by the Drawings and Specifications; or

23.3.2.3 That the District exercise any other remedy it may have at law or under the Contract Documents, including but not limited to the District hiring its own forces or another contractor to replace the Contractor's nonconforming Work, in which case the District shall either issue a deductive Change Order, a Construction Change Directive, or invoice the Contractor for the cost of that work. Contractor shall pay any invoices within thirty (30) days of receipt of same or District may withhold those amounts from payment(s) to Contractor.

24. TERMINATION AND SUSPENSION

24.1 District's Request for Assurances

If District at any time reasonably believes Contractor is or may be in default under this Contract, District may in its sole discretion notify Contractor of this fact and request written assurances from Contractor of performance of Work and a written plan from Contractor to remedy any potential default under the terms this Contract that the District may advise Contractor of in writing. Contractor shall, within ten (10) calendar days of District's request, deliver a written cure plan that meets the District's requirements in its request for assurances. Contractor's failure to provide such written assurances of performance and the required written plan, within ten (10) calendar days of request, will constitute a material breach of this Contract sufficient to justify termination for cause.

24.2 District's Right to Terminate Contractor for Cause

24.2.1 **Grounds for Termination:** The District, in its sole discretion, may terminate the Contract and/or terminate the Contractor's right to perform the work of the Contract based upon any of the following:

24.2.1.1 Contractor refuses or fails to execute the Work or any separable part thereof with sufficient diligence as will ensure its completion within the time specified or any extension thereof, or

24.2.1.2 Contractor fails to complete said Work within the time specified or any extension thereof, or

24.2.1.3 Contractor persistently fails or refuses to perform Work or provide material of sufficient quality as to be in compliance with Contract Documents; or

24.2.1.4 Contractor persistently refuses, or repeatedly fails, except in cases for which extension of time is provided, to supply enough properly skilled workers or proper materials to complete the Work in the time specified; or

24.2.1.5 Contractor fails to make prompt payment to Subcontractors, or for material, or for labor; or

24.2.1.6 Contractor persistently disregards laws, or ordinances, or instructions of District; or

24.2.1.7 Contractor fails to supply labor, including that of Subcontractors, that is sufficient to prosecute the Work or that can work in harmony with all other elements of labor employed or to be employed on the Work; or

24.2.1.8 Contractor or its Subcontractor(s) is/are otherwise in breach, default, or in substantial violation of any provision of this Contract, including but not limited to a lapse in licensing or registration.

24.2.2 <u>Notification of Termination</u>

24.2.2.1 Upon the occurrence at District's sole determination of any of the above conditions, District may, without prejudice to any other right or remedy, serve written notice upon Contractor and its Surety of District's termination of this Contract and/or the Contractor's right to perform the work of the Contract. This notice will contain the reasons for termination. Unless, within three (3) days after the service of the notice, any and all condition(s) shall cease, and any and all violation(s) shall cease, or arrangement satisfactory to District for the correction of the condition(s) and/or violation(s) be made, this Contract and/or the Contractor's right to perform the Work of the Contract shall cease and terminate. Upon termination, Contractor shall not be entitled to receive any further payment until the entire Work is finished.

24.2.2.2 Upon termination, District may immediately serve written notice of tender upon Surety whereby Surety shall have the right to take over and perform this Contract only if Surety:

24.2.2.2.1 Within three (3) days after service upon it of the notice of tender, gives District written notice of Surety's intention to take over and perform this Contract; and

24.2.2.2.2 Commences performance of this Contract within three (3) days from date of serving of its notice to District.

24.2.2.3 Surety shall not utilize Contractor in completing the Project if the District notifies Surety of the District's objection to Contractor's further participation in the completion of the Project. Surety expressly agrees that any contractor which Surety proposes to fulfill Surety's obligations is subject to District's approval. District's approval shall not be unreasonably withheld, conditioned or delayed.

24.2.2.4 If Surety fails to notify District or begin performance as indicated herein, District may take over the Work and execute the Work to completion by any method it may deem advisable at the expense of Contractor and/or its Surety. Contractor and/or its Surety shall be liable to District for any excess cost or other damages the District incurs thereby. Time is of the essence in this Contract. If the District takes over the Work as herein provided, District may, without liability for so doing, take possession of and utilize in completing the Work such materials, appliances, plan, and other property belonging to Contractor as may be on the Site of the Work, in bonded storage, or previously paid for.

24.2.2.5 In the alternative, the District shall have the right (but shall have no obligation) to assume and/or assign to a general contractor or construction manager or other third party who is qualified and has sufficient resources to complete the Work, the rights of the Contractor under its subcontracts with any or all Subcontractors. In the event of an assumption or assignment by the District, no Subcontractor shall have any claim against the District or third party for Work performed by Subcontractor or other matters arising prior to termination of the Contract and/or the Contractor's right to perform the work of the Contract. The District or any third party, as the case may be, shall be liable only for obligations to the Subcontractor arising after assumption or assignment. Should the District so elect, the Contractor shall execute and deliver all documents and take all steps, including the legal assignment of its contractual rights, as the District may require, for the purpose of fully vesting in the District the rights and benefits of its Subcontractor under Subcontracts or other obligations or commitments. All payments due the Contractor hereunder shall be subject to a right of offset by the District for expenses and damages suffered by the District as a result of any default, acts, or omissions of the Contractor. Contractor must include this assignment provision in all of its contracts with its Subcontractors.

24.2.3 In the event of a termination for cause, if the expense to the District to finish the Work exceeds the unpaid Contract Price, Contractor and Surety shall pay difference to District within twenty-one (21) days of District's request.

24.2.4 In the event a termination for cause is later determined to have been made wrongfully or without cause, then the termination shall be treated as a termination for convenience, effective as of the same date as the purported termination for cause, and the Contractor shall have no greater rights than it would have had following a termination for convenience. Any Contractor claim arising out of a termination for cause shall be made in accord with Article 12 herein. No other loss, cost, damage, expense or liability may be claimed, requested or recovered by the Contractor.

24.3 Termination of Contractor for Convenience

24.3.1 District in its sole discretion may terminate the Contract in whole or in part upon three (3) days' written notice to the Contractor.

24.3.2 Upon notice, Contractor shall:

24.3.2.1 Cease operations as directed by the District in the notice;

24.3.2.2 Take necessary actions for the protection and preservation of the Work as soon as possible; and

24.3.2.3 Terminate all existing subcontracts and purchase orders and enter into no further subcontracts and purchase orders.

24.3.3 Within 30 days of the notice, Contractor submit to the District a payment application for the actual cost for labor, materials, and services performed, including all Contractor's and Subcontractor(s)' mobilization and/or demobilization costs, that is unpaid. Contractor shall have no claims against the District except for the actual cost for labor, materials, and services performed that adequately documented through timesheets, invoices, receipts, or otherwise. District shall pay all undisputed invoice(s) for work performed until the notice of termination.

24.3.4 If Contractor objects to the termination for convenience, including disagreement on the actual cost due Contractor, the District retains the right to all the options available to the District under a termination for cause.

24.4 Effect of Termination

24.4.1 Contractor shall, only if ordered to do so by the District, immediately remove from the Site all or any materials and personal property belonging to Contractor that have not been incorporated in the construction of the Work, or which are not in place in the Work. The District retains the right, but not the obligation, to keep and use any materials and personal property belonging to Contractor that have not been incorporated in the construction of the Work, or which are not in place in the Work. The Contractor and its Surety shall be liable upon the Performance Bond for all damages caused to the District by reason of the Contractor's failure to complete the Contract.

24.4.2 In the event that the District shall perform any portion of, or the whole of the Work, pursuant to the provisions of the General Conditions, the District shall not be liable nor account to the Contractor in any way for the time within which, or the manner in which, the Work is performed by the District or for any changes the District may make in the Work or for the money expended by the District in satisfying claims and/or suits and/or other obligations in connection with the Work.

24.4.3 In the event that the Contract is terminated for any reason, no allowances or compensation will be granted for the loss of any anticipated profit by the Contractor or any impact or impairment of Contractor's bonding capacity.

24.4.4 The foregoing provisions are in addition to and not in limitation of any other rights or remedies available to District.

24.5 Emergency Termination of Public Contracts Act of 1949

24.5.1 This Contract is subject to termination as provided by sections 4410 and 4411 of the Government Code of the State of California, being a portion of the Emergency Termination of Public Contracts Act of 1949.

24.5.1.1 Section 4410 of the Government Code states:

In the event a national emergency occurs, and public work, being performed by contract, is stopped, directly or indirectly, because of the freezing or diversion of materials, equipment or labor, as the result of an order or a proclamation of the President of the United States, or of an order of any federal authority, and the circumstances or conditions are such that it is impracticable within a reasonable time to proceed with a substantial portion of the work, then the public agency and the contractor may, by written agreement, terminate said contract.

24.5.1.2 Section 4411 of the Government Code states:

Such an agreement shall include the terms and conditions of the termination of the contract and provision for the payment of compensation or money, if any, which either party shall pay to the other or any other person, under the facts and circumstances in the case.

24.5.2 Compensation to the Contractor shall be determined at the sole discretion of District on the basis of the reasonable value of the Work done, including preparatory work. As an exception to the foregoing and at the District's discretion, in the case of any fully completed separate item or portion of the Work for which there is a separate previously submitted unit price or item on the accepted schedule of values, that price shall control. The District, at its sole discretion, may adopt the Contract Price as the reasonable value of the work done or any portion thereof.

24.6 Suspension of Work

24.6.1 District in its sole discretion may suspend, delay or interrupt the Work in whole or in part for such period of time as the District may determine upon three (3) days written notice to the Contractor.

24.6.1.1 An adjustment may be made for changes in the cost of performance of the Work caused by any such suspension, delay or interruption. No adjustment shall be made to the extent:

24.6.1.1.1 That performance is, was or would have been so suspended, delayed or interrupted by another cause for which Contractor is responsible; or

24.6.1.1.2 That an equitable adjustment is made or denied under another provision of the Contract; or

24.6.1.1.3 That the suspension of Work was the direct or indirect result of Contractor’s failure to perform any of its obligations hereunder.

24.6.1.2 Any adjustments in cost of performance may have a fixed or percentage fee as provided in the section on Format for Proposed Change Order herein. This amount shall be full compensation for all Contractor's and its Subcontractor(s)' changes in the cost of performance of the Contract caused by any such suspension, delay or interruption.

25. CLAIMS PROCESS

25.1 Obligation to File Claims for Disputes

25.1.1 Should Contractor otherwise seek extra time or compensation for any reason whatsoever, then Contractor shall first follow procedures set forth in the Contract Documents including, without limitation, Articles 15, 16 and 17, all of which are conditions precedent to submitting a Claim pursuant to Article 25. A Notice of Delay or Proposed Change Order are less formal procedures that proceed the formal claim and do not constitute a Claim. A Claim also does not include correspondence, RFIs, vouchers, invoices, progress payment applications, or other routine or authorized form of requests for progress payments in compliance with the Contract. If a dispute remains, then Contractor shall give written notice to District that expressly invokes this Article 25 within the time limits set forth herein.

25.1.2 Contractor's sole and exclusive remedy for a Dispute is to file a written claim setting forth Contractor's position as required herein within the time limits set forth herein.

25.2 Duty to Perform during Claim Process

Contractor and its subcontractors shall continue to perform its Work under the Contract including the disputed work and shall not cause a delay of the Work during any dispute, claim, negotiation, mediation, or arbitration proceeding, except by written agreement by the District.

25.3 Definition of Claim

25.3.1 Pursuant to Public Contract Code section 9204, the term "Claim" means a separate demand by the Contractor sent by registered mail or certified mail with return receipt requested, for one or more of the following:

25.3.1.1 A time extension, including without limitation, for relief of damages or penalties for delay assessed by the District under the Contract;

25.3.1.2 Payment by the District of money or damages arising from work done by, or on behalf of, the Contractor pursuant to the Contract and payment of which is not otherwise expressly provided for or to which Contractor is not otherwise entitled to; or

25.3.1.3 An amount of payment disputed by the District.

25.4 Claims Presentation

25.4.1 Form and Contents of Claim

25.4.1.1 If Contractor intends to submit a Claim for an increase in the Contract Price and/or Contract Time for any reason including, without limitation, the acts of District or its agents, Contractor shall, within thirty (30) days after the event giving rise to the Claim, give notice of the Claim ("Notice of Potential Claim") in writing specifically identifying Contractor is invoking this Article 25 Claims Presentation. The Notice of Potential Claim shall provide Contractor's preliminary request for an adjustment to the Contract Price and/or Contract Time, with a description of the grounds therefore.

25.4.1.2 Within thirty (30) days after serving the written Notice of Potential Claim, Contractor shall provide a Claim including an itemized statement of the details and amounts of its Claim for any increase in the Contract Price of Contract Time as provided below, including a Time Impact Analysis and any and all other documentation substantiating Contractor's claimed damages:

25.4.1.2.1 The issues, events, conditions, circumstances and/or causes giving rise to the dispute, and shall show, in detail, the cause and effect of same;

25.4.1.2.2 Citation to provisions in the Contract Documents, statute sections, and/or case law entitling Contractor to an increase in the Contract Price or Contract Time;

25.4.1.2.3 The pertinent dates and/or durations and actual and/or anticipated effects on the Contract Price, Contract Schedule milestones and/or Contract Time adjustments;

25.4.1.2.4 The Time Impact Analysis of all time delays that shows actual time impact on the critical path; and

25.4.1.2.5 The line-item costs for labor, material, and/or equipment, if applicable, for all cost impacts priced like a change order according to Article 17 and must be updated monthly as to cost and entitlement if a continuing claim.

25.4.1.3 The Claim shall include the following certification by the Contractor:

25.4.1.3.1 The undersigned Contractor certifies under penalty of perjury that the attached dispute is made in good faith; that the supporting data is accurate and complete to the best of my knowledge and belief; that the amount requested accurately reflects the adjustment for which Contractor believes the District is liable; and that I am duly authorized to certify the dispute on behalf of the Contractor.

25.4.1.3.2 Furthermore, Contractor understands that the value of the attached dispute expressly includes any and all of the Contractor's costs and expenses, direct and indirect, resulting from the Work performed on the Project, additional time required on the Project and/or resulting from delay to

the Project including, without limitation, cumulative impacts. Contractor may not separately recover for overhead or other indirect costs. Any costs, expenses, damages, or time extensions not included are deemed waived.

25.4.2 Contractor shall bear all costs incurred in the preparation and submission of a Claim.

25.4.3 Failure to timely submit a Claim and the requisite supporting documentation shall constitute a waiver of Contractor's claim(s) against the District and Contractor's Claim(s) for compensation or an extension of time shall be deemed waived, released, and discharged as to any entitlement for adjustment to Contract Price and/or Contract Time.

25.5 <u>Claim Resolution pursuant to Public Contract Code section 9204</u>

The Parties may mutually agree in writing to waive the claims procedure under Public Contract Code section 9204 and proceed directly to the commencement of a civil action or binding arbitration. Absent prior mutual waiver, Contractor shall comply with the following steps:

25.5.1 STEP 1:

25.5.1.1 Upon receipt of a Claim by registered or certified mail, return receipt requested, including the documents necessary to substantiate it, the District shall conduct a reasonable review of the Claim and, within a period not to exceed forty-five (45) days, shall provide the Contractor a written statement identifying what portion of the Claim is disputed and what portion is undisputed. Upon receipt of a Claim, the District and Contractor may, by mutual agreement, extend the time period to provide a written statement. If the District needs approval from its governing body to provide the Contractor a written statement identifying the disputed portion and the undisputed portion of the Claim, and the governing body does not meet within the forty-five (45) days or within the mutually agreed to extension of time following receipt of Claim sent by registered mail or certified mail, return receipt requested, the District shall have up to three (3) days following the next duly publicly noticed meeting of the governing body after the 45-day period, or extension, expires to provide Contractor a written statement identifying the disputed portion and the undisputed portion.

25.5.1.1.1 Any payment due on an undisputed portion of the Claim shall be processed and made within sixty (60) days after the District issues its written statement. Amounts not paid in a timely manner as required by this section shall bear interest at seven percent (7%) per annum.

25.5.1.2 Upon receipt of a Claim, the parties may mutually agree to waive, in writing, mediation and proceed directly to the commencement of a civil action or binding arbitration, as applicable. In this instance, District and Contractor must comply with the sections below regarding Public Contract Code section 20104, et seq. and Government Code Claim Act Claims.

25.5.1.3 If the District fails to issue a written statement, or to otherwise meet the time requirements of this section, this shall result in the Claim being deemed rejected in its entirety. A Claim that is denied by reason of the District's failure

to have responded to a Claim, or its failure to otherwise meet the time requirements of this section, shall not constitute an adverse finding with regard to the merits of the Claim or the responsibility or qualifications of Contractor.

25.5.2 STEP 2:

25.5.2.1 If Contractor disputes the District's written response, or if the District fails to respond to a Claim within the time prescribed, Contractor may demand in writing an informal conference to meet and confer for settlement of the issues in dispute. Upon receipt of a demand in writing sent by registered mail or certified mail, return receipt requested, the District shall schedule a meet and confer conference within thirty (30) days for settlement of the dispute. Within ten (10) business days following the conclusion of the meet and confer conference, if the Claim or any portion of the Claim remains in dispute, the District shall provide the Contractor a written statement identifying the portion of the Claim that remains in dispute and the portion that is undisputed.

25.5.2.1.1.1 Any payment due on an undisputed portion of the Claim shall be processed and made within sixty (60) days after the District issues its written statement. Amounts not paid in a timely manner as required by this section shall bear interest at seven percent (7%) per annum.

25.5.3 STEP 3:

25.5.3.1 Any disputed portion of the Claim, as identified by Contractor in writing, shall be submitted to nonbinding mediation, with the District and Contractor sharing the associated costs equally. The District and Contractor shall mutually agree to a mediator within ten (10) business days after the disputed portion of the Claim has been identified in writing. If the parties cannot agree upon a mediator, each party shall select a mediator and those mediators shall select a qualified neutral third party to mediate with regard to the disputed portion of the Claim. Each party shall bear the fees and costs charged by its respective mediator in connection with the selection of the neutral mediator. If mediation is unsuccessful, the parts of the Claim remaining in dispute shall be subject to applicable procedures outside this section.

25.5.3.1.1 For purposes of this section, mediation includes any nonbinding process, including, but not limited to, neutral evaluation or a dispute review board, in which an independent third party or board assists the parties in dispute resolution through negotiation or by issuance of an evaluation. Any mediation utilized shall conform to the timeframes in this section.

25.5.3.2 Unless otherwise agreed to by the District and Contractor in writing, the mediation conducted pursuant to this section shall excuse any further obligation under Public Contract Code section 20104.4 to mediate after litigation has been commenced.

25.5.4 STEP 4:

25.5.4.1 If mediation under this section does not resolve the parties' dispute, the District may, but does not require arbitration of disputes under private arbitration or the Public Works Contract Arbitration Program.

25.6 Subcontractor Pass-Through Claims

25.6.1 If a subcontractor or a lower tier subcontractor lacks legal standing to assert a claim against a District because privity of contract does not exist, the contractor may present to the District a Claim on behalf of a subcontractor or lower tier subcontractor. A subcontractor may request in writing, either on his or her own behalf or on behalf of a lower tier subcontractor, that Contractor present a Claim for work which was performed by the subcontractor or by a lower tier subcontractor on behalf of the subcontractor. The subcontractor requesting that the Claim be presented to the District shall furnish reasonable documentation to support the Claim.

25.6.2 Within forty-five (45) days of receipt of this written request from a subcontractor, Contractor shall notify the subcontractor in writing as to whether the Contractor presented the Claim to the District and, if Contractor did not present the Claim, provide the subcontractor with a statement of the reasons for not having done so.

25.6.3 The Contractor shall bind all its Subcontractors to the provisions of this section and will hold the District harmless against Claims by Subcontractors.

25.7 Government Code Claim Act Claim

25.7.1 If a claim, or any portion thereof, remains in dispute upon satisfaction of all applicable Claim Resolution requirements the Contractor shall comply with all claims presentation requirements as provided in Chapter 1 (commencing with section 900) and Chapter 2 (commencing with section 910) of Part 3 of Division 3.6 of Title 1 of Government Code as a condition precedent to the Contractor's right to bring a civil action against the District.

25.7.2 Contractor shall bear all costs incurred in the preparation, submission and administration of a Claim. Any claims presented in accordance with the Government Code must affirmatively indicate Contractor's prior compliance with the claims procedure herein of the claims asserted.

25.7.3 For purposes of those provisions, the running of the time within which a claim pursuant to Public Contract Code section 20104.2 only must be presented to the District shall be tolled from the time the claimant submits his or her written claim until the time that claim is denied as a result of the meet and confer process, including any period of time utilized by the meet and confer process.

25.8 Claim Resolution pursuant to Public Contract Code section 20104 et seq.

25.8.1 In the event of a disagreement between the parties as to performance of the Work, the interpretation of this Contract, or payment or nonpayment for Work performed or not performed, the parties shall attempt to resolve all claims of three

hundred seventy-five thousand dollars ($375,000) or less which arise between Contractor and District by those procedures set forth in Public Contract Code section 20104, et seq., to the extent applicable.

25.8.1.1 Contractor shall file with the District any written Claim, including the documents necessary to substantiate it, upon the application for final payment.

25.8.1.2 For claims of less than fifty thousand dollars ($50,000), the District shall respond in writing within forty-five (45) days of receipt of the Claim or may request in writing within thirty (30) days of receipt of the Claim any additional documentation supporting the Claim or relating to defenses or claims the District may have against the Contractor.

25.8.1.2.1 If additional information is required, it shall be requested and provided by mutual agreement of the parties.

25.8.1.2.2 District's written response to the documented Claim shall be submitted to the Contractor within fifteen (15) days after receipt of the further documentation or within a period of time no greater than that taken by the Contractor to produce the additional information, whichever is greater.

25.8.1.3 For claims of over fifty thousand dollars ($50,000) and less than or equal to three hundred seventy-five thousand dollars ($375,000), the District shall respond in writing to all written Claims within sixty (60) days of receipt of the claim, or may request, in writing, within thirty (30) days of receipt of the Claim any additional documentation supporting the Claim or relating to defenses or claims the District may have against the Contractor.

25.8.1.3.1 If additional information is required, it shall be requested and provided upon mutual agreement of the District and the Contractor.

25.8.1.3.2 The District's written response to the Claim, as further documented, shall be submitted to the Contractor within thirty (30) days after receipt of the further documentation, or within a period of time no greater than that taken by the Contractor to produce the additional information or requested documentation, whichever is greater.

25.8.1.4 If Contractor disputes the District’s written response, or the District fails to respond within the time prescribed, Contractor may so notify the District, in writing, either within fifteen (15) days of receipt of the District's response or within fifteen (15) days of the District's failure to respond within the time prescribed, respectively, and demand an informal conference to meet and confer for settlement of the issues in dispute. Upon a demand, the District shall schedule a meet and confer conference within thirty (30) days for settlement of the dispute.

25.8.1.5 Following the meet and confer conference, if the Claim or any portion of it remains in dispute, the Contractor may file a claim as provided in Chapter 1 (commencing with Section 900) and Chapter 2 (commencing with Section 910) of Part 3 of Division 3.6 of Title 1 of the Government Code. For purposes of those provisions the running of the time within which a claim must be filed shall be tolled from the time the Contractor submits its written Claim until the time the

Claim is denied, including any period of time utilized by the meet and confer process.

25.8.1.6 For any civil action filed to resolve claims filed pursuant to this section, within sixty (60) days, but no earlier than thirty (30) days, following the filing of responsive pleadings, the court shall submit the matter to nonbinding mediation unless waived by mutual stipulation of both parties. The mediation process shall provide for the selection within fifteen (15) days by both parties of a disinterested third person as mediator, shall be commenced within thirty (30) days of the submittal, and shall be concluded within fifteen (15) days from the commencement of the mediation unless a time requirement is extended upon a good cause showing to the court or by stipulation of both parties. If the parties fail to select a mediator within the 15-day period, any party may petition the court to appoint the mediator.

25.8.1.7 If the matter remains in dispute, the case shall be submitted to judicial arbitration pursuant to Chapter 2.5 (commencing with Section 1141.10) of the Title 3 of Part 3 of the Code of Civil Procedure, notwithstanding Section 1141.11 of that code. The Civil Discovery Act of 1986, (Article 3 (commencing with Section 2016) of Chapter 3 of Title 3 of part 4 of the Code of Civil Procedure) shall apply to any proceeding brought under this subdivision consistent with the rules pertaining to judicial arbitration.

25.8.1.8 The District shall not fail to pay money as to any portion of a Claim which is undisputed except as otherwise provided in the Contract Documents. In any suit filed pursuant to this section, the District shall pay interest due at the legal rate on any arbitration award or judgment. Interest shall begin to accrue on the date the suit is filed in a court of law.

25.8.2 Contractor shall bind its Subcontractors to the provisions of this Article and will hold the District harmless against disputes by Subcontractors.

25.9 Claim Procedure Compliance

25.9.1 Failure to submit and administer claims as required in Article 25 shall waive Contractor's right to claim on any specific issues not included in a timely submitted claim. Claim(s) not raised in a timely protest and timely claim submitted under this Article 25 may not be asserted in any subsequent litigation, Government Code Claim, or legal action.

25.9.2 District shall not be deemed to waive any provision under this Article 25, if at District's sole discretion, a claim is administered in a manner not in accord with this Article 25. Waivers or modifications of this Article 25 may only be made by a signed change order approved as to form by legal counsel for both District and Contractor; oral or implied modifications shall be ineffective.

25.10 Claim Resolution Non-Applicability

25.10.1 The procedures for dispute and claim resolutions set forth in this Article shall not apply to the following:

25.10.1.1 Personal injury, wrongful death or property damage claims;

25.10.1.2 Latent defect or breach of warranty or guarantee to repair;

25.10.1.3 Stop payment notices;

25.10.1.4 District's rights set forth in the Article on Suspension and Termination;

25.10.1.5 Disputes arising out of labor compliance enforcement by the Department of Industrial Relations; or

25.10.1.6 District rights and obligations as a public entity set forth in applicable statutes; provided, however, that penalties imposed against a public entity by statutes, including, but not limited to, Public Contract Code sections 20104.50 and 7107, shall be subject to the Claim Resolution requirements provided in this Article.

25.11 Attorney's Fees

25.11.1 Should litigation be necessary to enforce any terms or provisions of this Agreement, then each party shall bear its own litigation and collection expenses, witness fees, court costs, and attorney's fees.

26. STATE LABOR, WAGE & HOUR, APPRENTICE, AND RELATED PROVISIONS

26.1 Labor Compliance and Enforcement

Since this Project is subject to labor compliance and enforcement by the Department of Industrial Relations ("DIR"), Contractor specifically acknowledges and understands that it shall perform the Work of this Agreement while complying with all the applicable provisions of Division 2, Part 7, Chapter 1, of the Labor Code and Title 8 of the California Code of Regulations, including, without limitation, the requirement that the Contractor and all Subcontractors shall timely furnish complete and accurate electronic certified payroll records directly to the DIR. The District may not issue payment if this requirement is not met.

26.2 Wage Rates, Travel, and Subsistence

26.2.1 Pursuant to the provisions of Article 2 (commencing at section 1770), Chapter 1, Part 7, Division 2, of the Labor Code, the general prevailing rate of per diem wages and the general prevailing rate for holiday and overtime work in the locality in which this public work is to be performed for each craft, classification, or type of worker needed to execute this Contract are on file at the District's principal office and copies will be made available to any interested party on request or available online at http://www.dir.ca.gov/. Contractor shall obtain and post a copy of these wage rates at the job site.

26.2.2 Holiday and overtime work, when permitted by law, shall be paid for at the general prevailing rate of per diem wages for holiday and overtime work on file with the Director of the Department of Industrial Relations, unless otherwise specified. The holidays upon which those rates shall be paid need not be specified by the District but shall be all holidays recognized in the applicable collective bargaining agreement. If the prevailing rate is not based on a collectively bargained rate, the

holidays upon which the prevailing rate shall be paid shall be as provided in Section 6700 of the Government Code.

26.2.3 Contractor shall pay and shall cause to be paid each worker engaged in Work on the Project the general prevailing rate of per diem wages determined by the Director of the Department of Industrial Relations, regardless of any contractual relationship which may be alleged to exist between Contractor or any Subcontractor and such workers.

26.2.4 If during the period this bid is required to remain open, the Director of the Department of Industrial Relations determines that there has been a change in any prevailing rate of per diem wages in the locality in which the Work under the Contract is to be performed, such change shall not alter the wage rates in the Notice to Bidders or the Contract subsequently awarded.

26.2.5 Pursuant to Labor Code section 1775, Contractor shall, as a penalty to District, forfeit the statutory amount up to two hundred dollars ($200) for each calendar day, or portion thereof, for each worker paid less than the prevailing rates, determined by the District and/or the Director, for the work or craft in which that worker is employed for any public work done under Contract by Contractor or by any Subcontractor under it. The difference between such prevailing wage rates and the amount paid to each worker for each calendar day or portion thereof for which each worker was paid less than the prevailing wage rate shall be paid to each worker by Contractor.

26.2.6 Any worker employed to perform Work on the Project, which Work is not covered by any classification listed in the general prevailing wage rate of per diem wages determined by the Director, shall be paid not less than the minimum rate of wages specified therein for the classification which most nearly corresponds to Work to be performed by him, and such minimum wage rate shall be retroactive to time of initial employment of such person in such classification.

26.2.7 Pursuant to Labor Code section 1773.1, per diem wages are deemed to include employer payments for health and welfare, pension, vacation, travel time, subsistence pay, and apprenticeship or other training programs authorized by Labor Code section 3093, and similar purposes.

26.2.8 Contractor shall post at appropriate conspicuous points on the Site of Project, a schedule showing all determined minimum wage rates and all authorized deductions, if any, from unpaid wages actually earned. In addition, Contractor shall post a sign-in log for all workers and visitors to the Site, a list of all subcontractors of any tier on the Site, and the required Equal Employment Opportunity poster(s).

26.3 <u>Hours of Work</u>

26.3.1 As provided in article 3 (commencing at section 1810), chapter 1, part 7, division 2, of the Labor Code, eight (8) hours of labor shall constitute a legal day's work. The time of service of any worker employed at any time by Contractor or by any Subcontractor on any subcontract under this Contract upon the Work or upon any part of the Work contemplated by this Contract shall be limited and restricted by Contractor to eight (8) hours per day, and forty (40) hours during any one week, except as hereinafter provided. Notwithstanding the provisions hereinabove set

forth, Work performed by employees of Contractor in excess of eight (8) hours per day and forty (40) hours during any one week, shall be permitted upon this public work upon compensation for all hours worked in excess of eight (8) hours per day at not less than one and one-half times the basic rate of pay.

26.3.2 Contractor shall keep and shall cause each Subcontractor to keep an accurate record showing the name of and actual hours worked each calendar day and each calendar week by each worker employed by Contractor in connection with the Work or any part of the Work contemplated by this Contract. The record shall be kept open at all reasonable hours to the inspection of District and to the Division of Labor Standards Enforcement of the DIR.

26.3.3 Pursuant to Labor Code section 1813, Contractor shall as a penalty to the District forfeit the statutory amount (believed by the District to be currently twenty-five dollars ($25)) for each worker employed in the execution of this Contract by Contractor or by any Subcontractor for each calendar day during which such worker is required or permitted to work more than eight (8) hours in any one calendar day and forty (40) hours in any one calendar week in violation of the provisions of article 3 (commencing at section 1810), chapter 1, part 7, division 2, of the Labor Code.

26.3.4 Any Work necessary to be performed after regular working hours, or on Sundays or other holidays shall be performed without additional expense to the District.

26.4 Payroll Records

26.4.1 Contractor shall upload, and shall cause each Subcontractor performing any portion of the Work under this Contract to upload, an accurate and complete certified payroll record ("CPR") electronically using DIR's eCPR System by uploading the CPRs by electronic XML file or entering each record manually using the DIR's iform (or current form) online on no less than every thirty (30) days while Work is being performed and within thirty (30) days after the final day of Work performed on the Project and within ten (10) days of any request by the District or Labor Commissioner at http://www.dir.ca.gov/Public-Works/Certified-Payroll-Reporting.html or current application and URL, showing the name, address, social security number, work classification, straight-time, and overtime hours worked each day and week, and the actual per diem wages paid to each journeyman, apprentice, worker, or other employee employed by the Contractor and/or each Subcontractor in connection with the Work.

26.4.1.1 The CPRs enumerated hereunder shall be filed directly with the DIR on a weekly basis or to the requesting party, whether the District or DIR, within ten (10) days after receipt of each written request. The CPRs from the Contractor and each Subcontractor for each week shall be provided on or before Wednesday of the week following the week covered by the CPRs. District may not make any payment to Contractor until:

26.4.1.1.1 Contractor and/or its Subcontractor(s) provide CPRs acceptable to the DIR; and

26.4.1.1.2 Any delay in Contractor and/or its Subcontractor(s) providing CPRs to the DIR in a timely manner may directly delay Contractor's payment.

26.4.2 All CPRs shall be available for inspection at all reasonable hours at the principal office of Contractor on the following basis:

26.4.2.1 A certified copy of an employee's CPR shall be made available for inspection or furnished to the employee or his/her authorized representative on request.

26.4.2.2 CPRs shall be made available for inspection or furnished upon request to a representative of District, Division of Labor Standards Enforcement, Division of Apprenticeship Standards, and/or the DIR.

26.4.2.3 CPRs shall be made available upon request by the public for inspection or copies thereof made; provided, however, that a request by the public shall be made through the District, Division of Apprenticeship Standards, or the Division of Labor Standards Enforcement. If the requested CPRs have not been provided pursuant to the provisions herein, the requesting party shall, prior to being provided the records, reimburse the costs of preparation by Contractor, Subcontractors, and the entity through which the request was made. The public shall not be given access to the records at the principal office of Contractor.

26.4.3 Any copy of records made available for inspection as copies and furnished upon request to the public or any public agency by District, Division of Apprenticeship Standards, or Division of Labor Standards Enforcement shall be marked or obliterated in such a manner as to prevent disclosure of an individual's name, address, and social security number. The name and address of Contractor awarded Contract or performing Contract shall not be marked or obliterated.

26.4.4 Contractor shall inform District of the location of the records enumerated hereunder, including the street address, city, and county, and shall, within five (5) working days, provide a notice of change of location and address.

26.4.5 In the event of noncompliance with the requirements of this section, Contractor shall have ten (10) days in which to comply subsequent to receipt of written notice specifying in what respects Contractor must comply with this section. Should noncompliance still be evident after the ten (10) day period, Contractor shall, as a penalty to District, forfeit up to one hundred dollars ($109) for each calendar day, or portion thereof, for each worker, until strict compliance is effectuated. Upon the request of the Labor Commissioner, these penalties shall be withheld from progress payments then due.

26.4.6 [RESERVED]

26.5 [RESERVED]

26.6 Apprentices

26.6.1 Contractor acknowledges and agrees that, if this Contract involves a dollar amount greater than, or a number of working days greater than that specified in Labor Code section 1777.5, then this Contract is governed by the provisions of Labor Code Section 1777.5. It shall be the responsibility of Contractor to ensure compliance with this Article and with Labor Code section 1777.5 for all apprenticeship occupations.

26.6.2 Apprentices of any crafts or trades may be employed and, when required by Labor Code section 1777.5, shall be employed provided they are properly registered in full compliance with the provisions of the Labor Code.

26.6.3 Every such apprentice shall be paid the standard wage paid to apprentices under the regulations of the craft or trade at which he/she/they is employed, and shall be employed only at the work of the craft or trade to which he/she/they is registered.

26.6.4 Only apprentices, as defined in section 3077 of the Labor Code, who are in training under apprenticeship standards and written apprentice agreements under chapter 4 (commencing at section 3070), division 3, of the Labor Code, are eligible to be employed. The employment and training of each apprentice shall be in accordance with the provisions of the apprenticeship standards and apprentice agreements under which he/she/they is training.

26.6.5 Pursuant to Labor Code section 1777.5, if that section applies to this Contract as indicated above, Contractor and any Subcontractors employing workers in any apprenticeable craft or trade in performing any Work under this Contract shall apply to the applicable joint apprenticeship committee for a certificate approving the Contractor or Subcontractor under the applicable apprenticeship standards and fixing the ratio of apprentices to journeymen employed in performing the Work.

26.6.6 Pursuant to Labor Code section 1777.5, if that section applies to this Contract as indicated above, Contractor and any Subcontractor may be required to make contributions to the apprenticeship program.

26.6.7 If Contractor or Subcontractor willfully fails to comply with Labor Code section 1777.5, then, upon a determination of noncompliance by the Administrator of Apprenticeship, it shall:

26.6.7.1 Be denied the right to bid on any subsequent project for one (1) year from the date of such determination;

26.6.7.2 Forfeit as a penalty to District the full amount as stated in Labor Code section 1777.7. Interpretation and enforcement of these provisions shall be in accordance with the rules and procedures of the California Apprenticeship Council and under the authority of the Chief of the Division of Apprenticeship Standards.

26.6.8 Contractor and all Subcontractors shall comply with Labor Code section 1777.6, which section forbids certain discriminatory practices in the employment of apprentices.

26.6.9 Contractor shall become fully acquainted with the law regarding apprentices prior to commencement of the Work. Special attention is directed to sections 1777.5, 1777.6, and 1777.7 of the Labor Code, and title 8, California Code of Regulations, section 200 et seq. Questions may be directed to the State Division of Apprenticeship Standards, 455 Golden Gate Avenue, 9th floor, San Francisco, California 94109.

26.7 Non-Discrimination

26.7.1 Contractor herein agrees to comply with the provisions of the California Fair Employment and Housing Act as set forth in part 2.8 of division 3 of the California Government Code, commencing at section 12900; the Federal Civil Rights Act of 1964, as set forth in Public Law 88-352, and all amendments thereto; Executive Order 11246; and all administrative rules and regulations found to be applicable to Contractor and Subcontractor.

26.7.2 Special requirements for Federally Assisted Construction Contracts: During the performance of this Contract, Contractor agrees to incorporate in all subcontracts the provisions set forth in Chapter 60-1.4(b) of Title 41 published in Volume 33 No. 104 of the Federal Register dated May 28, 1968.

26.8 Labor First Aid

Contractor shall maintain emergency first aid treatment for Contractor's workers on the Project which complies with the Federal Occupational Safety and Health Act of 1970 (29 U.S.C. § 651 et seq.) and the California Occupational Safety and Health Act of 1973 (Lab. Code, § 6300 et seq.; 8 Cal. Code of Regs., § 330 et seq.).

27. [RESERVED]

28. MISCELLANEOUS

28.1 Assignment of Antitrust Actions

28.1.1 Section 7103.5(b) of the Public Contract Code states:

In entering into a public works contract or subcontract to supply goods, services, or materials pursuant to a public works contract, the Contractor or subcontractor offers and agrees to assign to the awarding body all rights, title, and interest in and to all causes of action it may have under Section 4 of the Clayton Act (15 U.S.C. Sec. 15) or under the Cartwright Act (Chapter 2 (commending with Section 16700) of Part 2 of Division 7 of the Business and Professions Code), arising from purchases of goods, which assignment shall be made and become effective at the time the awarding body tenders final payment to the Contractor, without further acknowledgment by the parties.

28.1.2 Section 4552 of the Government Code states:

In submitting a bid to a public purchasing body, the bidder offers and agrees that if the bid is accepted, it will assign to the purchasing body all rights, title, and interest in and to all causes of action it may have under Section 4 of the Clayton Act (15 U.S.C. Sec. 15) or under the Cartwright Act (Chapter 2 (commencing with Section 16700) of Part 2 of Division 7 of the Business and Professions Code), arising from purchases of goods, materials, or services by the bidder for sale to the purchasing body pursuant to the bid. Such assignment shall be made and become effective at the time the purchasing body tenders final payment to the bidder.

28.1.3 Section 4553 of the Government Code states:

If an awarding body or public purchasing body receives, either through judgment or settlement, a monetary recovery for a cause of action assigned under this chapter, the assignor shall be entitled to receive reimbursement for actual legal costs incurred and may, upon demand, recover from the public body any portion of the recovery, including treble damages, attributable to overcharges that were paid by the assignor but were not paid by the public body as part of the bid price, less the expenses incurred in obtaining that portion of the recovery.

28.1.4 Section 4554 of the Government Code states:

Upon demand in writing by the assignor, the assignee shall, within one year from such demand, reassign the cause of action assigned under this part if the assignor has been or may have been injured by the violation of law for which the cause of action arose and (a) the assignee has not been injured thereby, or (b) the assignee declines to file a court action for the cause of action.

28.1.5 Under this Article, "public purchasing body" is District and "bidder" is Contractor.

28.2 Excise Taxes

If, under Federal Excise Tax Law, any transaction hereunder constitutes a sale on which a Federal Excise Tax is imposed and the sale is exempt from such Federal Excise Tax because it is a sale to a State or Local Government for its exclusive use, District, upon request, will execute documents necessary to show (1) that District is a political subdivision of the State for the purposes of such exemption, and (2) that the sale is for the exclusive use of District. No Federal Excise Tax for such materials shall be included in any Contract Price.

28.3 Taxes

Contract Price is to include any and all applicable sales taxes or other taxes that may be due in accordance with section 7051 et seq. of the Revenue and Taxation Code, Regulation 1521 of the State Board of Equalization or any other tax code that may be applicable.

28.4 Shipments

Contractor is responsible for any or all damage or loss to shipments until delivered and accepted on Site, as indicated in the Contract Documents. There must be no charge for containers, packing, unpacking, drayage, or insurance. The total Contract Price shall be all inclusive (including sales tax) and no additional costs of any type will be considered.

28.5 Compliance with Government Reporting Requirements

If this Contract is subject to federal or other governmental reporting requirements because of federal or other governmental financing in whole or in part for the Project of which it is part, or for any other reason, Contactor shall comply with those reporting requirements at the request of the District at no additional cost.

END OF DOCUMENT

DOCUMENT 00 73 13

SPECIAL CONDITIONS

1. Occupied Site

1.1 Access. Access to the school buildings and entry to buildings, classrooms, restrooms, mechanical rooms, electrical rooms, or other rooms, for construction purposes, must be coordinated with District and onsite District personnel before Work is to start. Unless agreed to otherwise in writing, only a school custodian will be allowed to unlock and lock doors in existing building(s). The custodian will be available only while school is in session. If a custodian is required to arrive before 7:00 a.m. or leave after 3:30 p.m. to accommodate Contractor's Work, the overtime wages for the custodian will be paid by the Contractor, unless at the discretion of the District, other arrangements are made in advance.

1.2 Keys. Upon request, the District may, at its own discretion, provide keys to the school site for the convenience of the Contractor. The Contractor agrees to pay all expenses to re-key the entire school site and all other affected District buildings if the keys are lost or stolen, or if any unauthorized party obtains a copy of the key or access to the school.

1.3 Maintaining Services. The Contractor is advised that Work is to be performed in spaces regularly scheduled for instruction. Interruption and/or periods of shutdown of public access, electrical service, water service, lighting, or other utilities shall be only as arranged in advance with the District. Contractor shall provide temporary services to all facilities interrupted by Contractor's Work.

1.4 Maintaining Utilities. The Contractor shall maintain in operation during duration of Contract, drainage lines, storm drains, sewers, water, gas, electrical, steam, and other utility service lines within working area.

1.5 Confidentiality. Contractor shall maintain the confidentiality of all information, documents, programs, procedures and all other items that Contractor encounters while performing the Work. This requirement shall be ongoing and shall survive the expiration or termination of this Contract and specifically includes, without limitation, all student, parent, and employee disciplinary information and health information.

1.6 Work during Instructional Time. By submitting its bid, Contractor acknowledges that the Project may overlap with ongoing instruction in existing facilities. If so, Contractor agrees to cooperate to the best of its ability to minimize any disruption to school operations and any use of school facilities by the public up to, and including, rescheduling specific work activities, at no additional cost to District. If Contractor cannot adequately minimize the disruption to District's satisfaction, District reserves the

right to require that Contractor perform Work outside of school operation hours at no additional cost to District.

2. Substitutions for Specified Items

Replace Section 1.7 in the General Conditions with the following provisions:

1.7.1 Whenever in the Specifications any materials, process, or article is indicated or specified by grade, patent, or proprietary name, or by name of manufacturer, that Specification shall be deemed to be followed by the words "or equal." Contractor may, unless otherwise stated, offer any material, process, or article that shall be substantially equal or better in every respect to that so indicated or specified.

1.7.1.1 If the material, process, or article offered by Contractor is not, in the opinion of the District, substantially equal or better in every respect to that specified, then Contractor shall furnish the material, process, or article specified in the Specifications without any additional compensation or change order.

1.7.1.2 This provision shall not be applicable with respect to any material, product, thing or service for which District made findings and gave notice in accordance with Public Contract Code section 3400(c); therefore, Contractor shall not be entitled to request a substitution with respect to those materials, products or services.

1.7.2 A request for a substitution shall be submitted as follows:

1.7.2.1 Contractor shall notify the District in writing of any request for a substitution at least ten (10) days prior to bid opening as indicated in the Instructions to Bidders.

1.7.2.2 Requests for Substitutions after award of the Contract shall be submitted within thirty-five (35) days of the date of the Notice of Award.

1.7.3 Within 35 days after the date of the Notice of Award, Contractor shall provide data substantiating a request for substitution of "an equal" item, including but not limited to the following:

1.7.3.1 All variations of the proposed substitute from the material specified including, but not limited to, principles of operation, materials, or construction finish, thickness or gauge of materials, dimensions, weight, and tolerances;

1.7.3.2 Available maintenance, repair or replacement services;

1.7.3.3 Increases or decreases in operating, maintenance, repair, replacement, and spare parts costs;

1.7.3.4 Whether or not acceptance of the substitute will require other changes in the Work (or in work performed by the District or others under Contract with the District); and

1.7.3.5 The time impact on any part of the Work resulting directly or indirectly from acceptance of the proposed substitute.

1.7.4 No substitutions shall be made until approved, in writing, by the District. The burden of proof as to equality of any material, process, or article shall rest with Contractor. The Contractor warrants that if substitutes are approved:

1.7.4.1 The proposed substitute is equal or superior in all respects to that specified, and that such proposed substitute is suitable and fit for the intended purpose and will perform adequately the function and achieve the results called for by the general design and the Contract Documents;

1.7.4.2 The Contractor provides the same warranties and guarantees for the substitute that would be provided for that specified;

1.7.4.3 The Contractor shall be fully responsible for the installation of the substitute and any changes in the Work required, either directly or indirectly, because of the acceptance of such substitute, with no increase in Contract Price or Contract Time. Incidental changes or extra component parts required to accommodate the substitute will be made by the Contractor without a change in the Contract Price or Contract Time;

1.7.4.4 The Contractor shall be responsible for any re-design costs occasioned by District's acceptance and/or approval of any substitute; and

1.7.4.5 The Contractor shall, in the event that a substitute is less costly than that specified, credit the District with one hundred percent (109%) of the net difference between the substitute and the originally specified material. In this event, the Contractor agrees to execute a deductive Change Order to reflect that credit.

1.7.5 In the event Contractor furnishes a material, process, or article more expensive than that specified, the difference in the cost of that material, process, or article so furnished shall be borne by Contractor.

1.7.6 In no event shall the District be liable for any increase in Contract Price or Contract Time due to any claimed delay in the evaluation of any proposed substitute or in the acceptance or rejection of any proposed substitute.

1.7.7 Contractor shall be responsible for any costs the District incurs for professional services, DSA fees, or delay to the Project Schedule, if applicable, while DSA reviews changes for the convenience of Contractor and/or to accommodate Contractor's means and methods. District may deduct those costs from any amounts owing to the Contractor for the review of the request for substitution, even if the request for substitution is not approved. District, at its sole discretion, shall deduct from the payments due to and/or invoice Contractor for all the professional services and/or DSA fees or delay to the Project Schedule, if applicable, while DSA reviews changes for the convenience of Contractor and/or to accommodate Contractor's means and methods arising herein.

[THE REMAINDER OF THIS PAGE LEFT BLANK INTENTIONALLY]

3. As-Builts and Record Drawings

3.1 When called for by Division 1, Contractor shall submit As-Built Drawings pursuant to the Contract Documents consisting of one set of computer-aided design and drafting ("CADD") files in the following format _____, plus one set of As-Built Drawings in hard copy.

3.2 Contractor shall submit Record Drawings pursuant to the Contract Documents consisting of one set of computer-aided design and drafting ("CADD") files in the following format _____, plus one set of Record Drawings in hard copy].

4. Disabled Veteran Business Enterprises

This Project uses or may plan to use funds allocated pursuant to the State of California School Facility Program ("Program") for the construction and/or modernization of school buildings. Therefore, Section 17076.11 of the Education Code requires the District to have a participation goal for disabled veteran business enterprises ("DVBE") of at least three percent (3%), per year, of the overall dollar amount expended each year by the District on projects that receive state funding. The Contractor must submit the Disabled Veteran Business Enterprise Participation Certification to the District with its executed Agreement, identifying the steps Contractor took to solicit DVBE participation in conjunction with this Contract.

5. FEDERAL LABOR, WAGE & HOUR, APPRENTICE, AND RELATED PROVISIONS

5.1 Minimum Wages

The Davis-Bacon Act and 29 CFR parts 1 through 7 shall apply if the Project is financed in whole or in part from Federal funds or in accordance with guarantees of a Federal agency or financed from funds obtained by pledge of any contract of a Federal agency to make a loan, grant or annual contribution.

5.1.1 All laborers and mechanics employed or working upon the Site of the Work (or under the United States Housing Act of 1937 or under the Housing Act of 1949 in the construction or development of the Project), will be paid unconditionally and not less often than once a week, and without subsequent deduction or rebate on any account, except such payroll deductions as are permitted by regulations issued by the Secretary of Labor under the Copeland Act (29 CFR part 3) , the full amount of wages and bona fide fringe benefits, or cash equivalents thereof, due at time of payment computed at rates not less than those contained in the applicable wage determination of the Secretary of Labor regardless of any contractual relationship which may be alleged to exist between the Contractor and such laborers and mechanics.

Contributions made or costs reasonably anticipated for bona fide fringe benefits under section 1(b)(2) of the Davis-Bacon Act on behalf of laborers or mechanics are considered wages paid to such laborers or mechanics, subject to the provisions of this section, including but not limited to paragraph 27.1.7; also, regular contributions made or costs incurred for more than a weekly period, but not less often than quarterly, under plans, funds, or programs which cover the particular weekly period, are deemed to be constructively made or incurred during such weekly period. Such

laborers and mechanics shall be paid the appropriate wage rate and fringe benefits on the wage determination for the classification of Work actually performed, without regard to skill, except as provided in 29 CFR 5.5(a)(4). Laborers or mechanics performing Work in more than one classification may be compensated at the rate specified for each classification for the time actually worked therein: Provided, that the employer's payroll records accurately set forth the time spent in each classification in which Work is performed. The wage determination including any additional classification and wage rates conformed under this section, including but not limited to paragraph 27.1.6 and the Davis-Bacon poster (WH-1321) shall be posted at all times by the Contractor and its Subcontractors at the Site of the Work in a prominent and accessible place where it can be easily seen by the workers.

5.1.2 Any class of laborers or mechanics, including helpers, and which is to be employed under the Contract which is not listed in the wage determination shall be classified in conformance with the wage determination. An additional classification and wage rate and fringe benefits will not be approved unless when the following criteria have been met:

5.1.2.1 The Work to be performed by the classification requested is not performed by a classification in the wage determination; and

5.1.2.2 The classification is utilized in the area by the construction industry; and

5.1.2.3 The proposed wage rate, including any bona fide fringe benefits, bears a reasonable relationship to the wage rates contained in the wage determination.

5.1.3 If the Contractor and the laborers and mechanics to be employed in the classification (if known), or their representatives, and the District agree on the classification and wage rate (including the amount designated for fringe benefits where appropriate), a report of the action taken shall be sent by the Contractor to the Administrator of the Wage and Hour Division, Employment Standards Administration, U.S. Department of Labor, Washington, DC 20210.

5.1.4 In the event the Contractor, the laborers or mechanics to be employed in the classification or their representatives, and the District do not agree on the proposed classification and wage rate (including the amount designated for fringe benefits, where appropriate), the Contractor shall provide the questions, including the views of all interested parties and the recommendation of the District, to the District for the District’s review and referral to the Administrator for determination.

5.1.5 The wage rate (including fringe benefits where appropriate) determined pursuant to this section, shall be paid to all workers performing Work in the classification under this Contract from the first day on which Work is performed in the classification.

5.1.6 Whenever the minimum wage rate prescribed in any applicable wage determination for a class of laborers or mechanics includes a fringe benefit which is not expressed as an hourly rate, Contractor shall either pay the benefit as stated in the wage determination or shall pay another bona fide fringe benefit or an hourly cash equivalent thereof.

5.1.7 If the Contractor does not make payments to a trustee or other third person, the Contractor may consider, as part of the wages of any laborer or mechanic, the amount of any costs reasonably anticipated in providing bona fide fringe benefits under a plan or program, provided that the Secretary of Labor has found, upon the written request of the Contractor, that the applicable standards of the Davis-Bacon Act have been met. If the Secretary of Labor so requires, the Contractor shall set aside in a separate account sufficient assets to meet obligations under the plan or program.

5.2 Withholding. District may, upon its own action or upon written request of an authorized representative of the Department of Labor, withhold or cause to be withheld from the Contractor under this Contract or any other Federal contract with the same Contractor, or any other federally-assisted contract subject to Davis-Bacon prevailing wage requirements, which is held by the same Contractor, so much of the accrued payments or advances as may be considered necessary to pay laborers and mechanics, including apprentices, trainees, and helpers, employed by the Contractor or any Subcontractor the full amount of wages required by the Contract. In the event of Contractor's or any Subcontractors' failure to pay any laborer or mechanic, including any apprentice, trainee, or helper, employed or working on the Site of the Work (or under the United States Housing Act of 1937 or under the Housing Act of 1949 in the construction or development of the project), all or part of the wages required by the Contract, the District may, after written notice to the Contractor, sponsor, applicant, or owner, take such action as it deems necessary to cause the suspension of any further payment, advance, or guarantee of funds until such violations have ceased.

5.3 Payrolls and basic records.

5.3.1 Payrolls and basic records relating thereto shall be maintained by the Contractor during the course of the Work and preserved for a period of three years thereafter for all laborers and mechanics working at the Site of the Work (or under the United States Housing Act of 1937, or under the Housing Act of 1949, in the construction or development of the project). Such records shall contain the name, address, and social security number of each worker, his or her correct classification, hourly rates of wages paid (including rates of contributions or costs anticipated for bona fide fringe benefits or cash equivalents thereof of the types described in section 1(b)(2)(B) of the Davis-Bacon Act), daily and weekly number of hours worked, deductions made and actual wages paid. Whenever the Secretary of Labor has found under 29 CFR 5.5(a)(1)(iv) that the wages of any laborer or mechanic include the amount of any costs reasonably anticipated in providing benefits under a plan or program described in section 1(b)(2)(B) of the Davis-Bacon Act, the Contractor shall maintain records that show that the commitment to provide such benefits is enforceable, that the plan or program is financially responsible, and that the plan or program has been communicated in writing to the laborers or mechanics affected, and records which show the costs anticipated or the actual cost incurred in providing such benefits. Contractors employing apprentices or trainees under approved programs shall maintain written evidence of the registration of apprenticeship programs and certification of trainee programs, the registration of the apprentices and trainees, and the ratios and wage rates prescribed in the applicable programs.

5.3.2 The Contractor shall submit weekly for each week in which any Contract Work is performed a copy of all payrolls to the District. The payrolls submitted shall set out accurately and completely all of the information required to be maintained under 29 CFR 5.5(a)(3)(i), except that full social security numbers and home addresses shall

not be included on weekly transmittals. Instead the payrolls shall only need to include an individually identifying number for each employee (e.g., the last four digits of the employee's social security number). The required weekly payroll information shall be submitted on a form acceptable to the District. Optional Form WH-347 is available for this purpose from the Wage and Hour Division Web site at https://www.dol.gov/whd/programs/dbra/wh347.htm or its successor site. Contractor is responsible for the submission of copies of payrolls by all Subcontractors. Contractor and Subcontractors shall maintain the full social security number and current address of each covered worker, and shall provide them upon request to the District, the Contractor, or the Wage and Hour Division of the Department of Labor for purposes of an investigation or audit of compliance with prevailing wage requirements. Contractor may require a Subcontractor to provide addresses and social security numbers to the Contractor for its own records, without weekly submission to the District or other government agency

5.3.3 Each payroll submitted shall be accompanied by a "Statement of Compliance," signed by the Contractor or Subcontractor or his or her agent who pays or supervises the payment of the persons employed under the Contract and shall certify the following:

5.3.3.1 That the payroll for the payroll period contains the information required to be provided under 29 CFR 5.5 (a)(3)(ii) of Regulations, 29 CFR part 5,

5.3.3.2 That the appropriate information is being maintained under 29 CFR 5.5 (a)(3)(i) of Regulations, 29 CFR part 5, and

5.3.3.3 That such information is correct and complete;

5.3.3.4 That each laborer or mechanic (including each helper, apprentice, and trainee) employed on the Contract during the payroll period has been paid the full weekly wages earned, without rebate, either directly or indirectly, and

5.3.3.5 That no deductions have been made either directly or indirectly from the full wages earned, other than permissible deductions as set forth in Regulations, 29 CFR part 3;

5.3.3.6 That each laborer or mechanic has been paid not less than the applicable wage rates and fringe benefits or cash equivalents for the classification of Work performed, as specified in the applicable wage determination incorporated into or applicable to the Contract.

5.3.3.7 The weekly submission of a properly executed certification in the form set forth on the reverse side of Optional Form WH-347 shall satisfy the requirement for submission of the "Statement of Compliance" required by paragraph 27.3.3 of this section.

5.3.3.8 The falsification of any of the above certifications may subject the Contractor or one or more Subcontractors to civil or criminal prosecution under section 1091 of title 18 and section 231 of title 31 of the United States Code.

5.3.3.9 The Contractor or Subcontractor shall make the records required under this section available for inspection, copying, or transcription by authorized

representatives of the District or the federal Department of Labor, and shall permit representatives to interview employees during working hours on the job. If the Contractor or Subcontractor fails to submit the required records or to make them available, the Federal agency may, after written notice to the Contractor, sponsor, applicant, or owner, take such action as may be necessary to cause the suspension of any further payment, advance, or guarantee of funds. Furthermore, failure to submit the required records upon request or to make such records available may be grounds for debarment action pursuant to 29 CFR 5.12.

5.4 Apprentices and trainees

5.4.1 Apprentices. Apprentices will be permitted to work at less than the predetermined rate for the Work they performed when they are employed pursuant to and individually registered in a bona fide apprenticeship program registered with the U.S. Department of Labor, Employment and Training Administration, Office of Apprenticeship Training, Employer and Labor Services, or with a State Apprenticeship Agency recognized by the Office, or if a person is employed in his or her first ninety (90) days of probationary employment as an apprentice in an eligible apprenticeship program, who is not individually registered in the program, but who has been certified by the Office of Apprenticeship Training, Employer and Labor Services or a State Apprenticeship Agency (where appropriate) to be eligible for probationary employment as an apprentice. The allowable ratio of apprentices to journeymen on the job Site in any craft classification shall not be greater than the ratio permitted to the Contractor as to the entire work force under the registered program. Any worker listed on a payroll at an apprentice wage rate, who is not registered or otherwise employed as stated above, shall be paid not less than the applicable wage rate on the wage determination for the classification of Work actually performed. In addition, any apprentice performing Work on the job Site in excess of the ratio permitted under the registered program shall be paid not less than the applicable wage rate on the wage determination for the Work actually performed. Where a Contractor is performing construction on a project in a locality other than that in which its program is registered, the ratios and wage rates (expressed in percentages of the journeyman's hourly rate) specified in the Contractor's or Subcontractor's registered program shall be observed. Every apprentice must be paid at not less than the rate specified in the registered program for the apprentice's level of progress, expressed as a percentage of the journeyman hourly rate specified in the applicable wage determination. Apprentices shall be paid fringe benefits in accordance with the provisions of the apprenticeship program. If the apprenticeship program does not specify fringe benefits, apprentices must be paid the full amount of fringe benefits listed on the wage determination for the applicable classification. If the Administrator determines that a different practice prevails for the applicable apprentice classification, fringes shall be paid in accordance with that determination. In the event the Office of Apprenticeship Training, Employer and Labor Services, or a State Apprenticeship Agency recognized by the Office, withdraws approval of an apprenticeship program, the Contractor will no longer be permitted to utilize apprentices at less than the applicable predetermined rate for the Work performed until an acceptable program is approved.

5.4.2 Trainees. Except as provided in 29 CFR 5.16, trainees will not be permitted to Work at less than the predetermined rate for the Work performed unless they are employed pursuant to and individually registered in a program which has received prior approval, evidenced by formal certification by the U.S. Department of Labor, Employment and Training Administration. The ratio of trainees to journeymen on the

job Site shall not be greater than permitted under the plan approved by the Employment and Training Administration. Every trainee must be paid at not less than the rate specified in the approved program for the trainee's level of progress, expressed as a percentage of the journeyman hourly rate specified in the applicable wage determination. Trainees shall be paid fringe benefits in accordance with the provisions of the trainee program. If the trainee program does not mention fringe benefits, trainees shall be paid the full amount of fringe benefits listed on the wage determination unless the Administrator of the Wage and Hour Division determines that there is an apprenticeship program associated with the corresponding journeyman wage rate on the wage determination which provides for less than full fringe benefits for apprentices. Any employee listed on the payroll at a trainee rate who is not registered and participating in a training plan approved by the Employment and Training Administration shall be paid not less than the applicable wage rate on the wage determination for the classification of Work actually performed. In addition, any trainee performing Work on the job Site in excess of the ratio permitted under the registered program shall be paid not less than the applicable wage rate on the wage determination for the Work actually performed. In the event the Employment and Training Administration withdraws approval of a training program, the Contractor will no longer be permitted to utilize trainees at less than the applicable predetermined rate for the Work performed until an acceptable program is approved.

5.4.3 Equal employment opportunity. The utilization of apprentices, trainees and journeymen under this part shall be in conformity with the equal employment opportunity requirements of Executive Order 11246, as amended, and 29 CFR part 30.

5.5 Compliance with Copeland Act requirements. Contractor shall comply with the requirements of 29 CFR part 3, which are incorporated by reference in this Contract.

5.6 Subcontracts. The Contractor or Subcontractor shall insert in any subcontracts the clauses contained in 29 CFR 5.5(a)(1) through (10) and such other clauses as the Federal agency may by appropriate instructions require, and also a clause requiring the Subcontractors to include these clauses in any lower tier subcontracts. The Contractor shall be responsible for the compliance by any Subcontractor or lower tier Subcontractor with all the Contract clauses in 29 CFR 5.5.

5.7 Contract termination: debarment. A breach of the Contract clauses in 29 CFR 5.5 may be grounds for termination of the Contract, and for debarment as a Contractor and a Subcontractor as provided in 29 CFR 5.12.

5.8 Compliance with Davis-Bacon and Related Act requirements. All rulings and interpretations of the Davis-Bacon and Related Acts contained in 29 CFR parts 1, 3, and 5 are herein incorporated by reference in this Contract.

5.9 Disputes concerning labor standards. Disputes arising out of the labor standards provisions of this Contract shall not be subject to the general disputes clause of this Contract. Such disputes shall be resolved in accordance with the procedures of the Department of Labor set forth in 29 CFR parts 5, 6, and 7. Disputes within the meaning of this clause include disputes between the Contractor (or any of its Subcontractors) and the contracting agency, the U.S. Department of Labor, or the employees or their representatives.

5.10 Certification of Eligibility.

5.10.1 By entering into this Contract, the Contractor certifies that neither it (nor he or she) nor any person or firm who has an interest in the Contractor's firm is a person or firm ineligible to be awarded Government contracts by virtue of section 3(a) of the Davis-Bacon Act or 29 CFR 5.12(a)(1).

5.10.2 No part of this Contract shall be subcontracted to any person or firm ineligible for award of a Government contract by virtue of section 3(a) of the Davis-Bacon Act or 29 CFR 5.12(a)(1).

5.10.3 Contractor shall be subject to the penalty for making false statements prescribed in the U.S. Criminal Code, 18 U.S.C. 1091.

5.11 Clauses Mandated by Contract Work Hours and Safety Standards Act.

As used in the following paragraphs, the terms laborers and mechanics include watchmen and guards.

5.11.1 Overtime requirements. No Contractor or Subcontractor contracting for any part of the Contract Work which may require or involve the employment of laborers or mechanics shall require or permit any such laborer or mechanic in any workweek in which he or she is employed on such Work to work in excess of forty hours in such workweek unless such laborer or mechanic receives compensation at a rate not less than one and one-half times the basic rate of pay for all hours worked in excess of forty hours in such workweek.

5.11.2 Violation; liability for unpaid wages; liquidated damages. In the event of any violation of the clause set forth in the foregoing paragraph the Contractor and any Subcontractor responsible therefor shall be liable for the unpaid wages. In addition, such Contractor and Subcontractor shall be liable to the United States for liquidated damages. Such liquidated damages shall be computed with respect to each individual laborer or mechanic, including watchmen and guards, employed in violation of the foregoing paragraph, in the sum of $10 for each calendar day on which such individual was required or permitted to Work in excess of the standard workweek of forty hours without payment of the overtime wages required by the foregoing paragraph.

5.11.3 Withholding for unpaid wages and liquidated damages. The District may upon its own action or upon written request of an authorized representative of the Department of Labor withhold or cause to be withheld, from any moneys payable on account of Work performed by the Contractor or Subcontractor under the Contract or any other Federal contract with the same Contractor, or any other federally-assisted contract subject to the Contract Work Hours and Safety Standards Act, which is held by the same Contractor, such sums as may be determined to be necessary to satisfy any liabilities of such Contractor or Subcontractor for unpaid wages and liquidated damages as provided in the forgoing paragraph.

5.11.4 Subcontracts. The Contractor or Subcontractor shall insert in any subcontracts the foregoing paragraphs concerning "Overtime requirements" and "Violation; liability for unpaid wages; liquidated damages" and also a clause requiring each Subcontractor to include these clauses in any lower tier subcontracts. Contractor shall be responsible for compliance by any Subcontractor or lower tier

Subcontractor with the clauses set forth in paragraphs 5.11.1 through 5.11.4 of this section.

END OF SECTION

DOCUMENT 00 73 56

HAZARDOUS MATERIALS
PROCEDURES & REQUIREMENTS

1. Summary

This document includes information applicable to hazardous materials and hazardous waste abatement.

2. Notice of Hazardous Waste or Materials

a. Contractor shall give notice in writing to the District, the Construction Manager, and the Architect promptly, before any of the following materials are disturbed, and in no event later than twenty-four (24) hours after first observance, of any:

(1) Material that Contractor believes may be a material that is hazardous waste or hazardous material, as defined in section 25117 of the Health and Safety Code, that is required to be removed to a Class I, Class II, or Class III disposal site in accordance with provisions of existing law;

(2) Other material that may present a substantial danger to persons or property exposed thereto in connection with Work at the site.

b. Contractor's written notice shall indicate whether the hazardous waste or material was shown or indicated in the Contract Documents to be within the scope of Work, and whether the materials were brought to the site by Contractor, its Subcontractors, suppliers, or anyone else for whom Contractor is responsible. As used in this section the term "hazardous materials" shall include, without limitation, asbestos, lead, Polychlorinated biphenyl (PCB), petroleum and related hydrocarbons, and radioactive material.

c. In response to Contractor's written notice, the District shall investigate the identified conditions.

d. If the District determines that conditions do not involve hazardous materials or that no change in terms of Contract is justified, the District shall so notify Contractor in writing, stating reasons. If the District and Contractor cannot agree on whether conditions justify an adjustment in Contract Price or Contract Time, or on the extent of any adjustment, Contractor shall proceed with the Work as directed by the District.

e. If after receipt of notice from the District, Contractor does not agree to resume Work based on a reasonable belief it is unsafe, or does not agree to resume Work under special conditions, then District may order such portion of Work that is in connection with such hazardous condition or such affected area to be deleted from the Work, or performed by others, or District may invoke its rights to terminate the Contract in whole or in part. District will determine entitlement to or the amount or extent of an adjustment, if any, in Contract Price or Contract Time as a result of deleting such portion of Work, or performing the Work by others.

f. If Contractor stops Work in connection with any hazardous condition and in any area affected thereby, Contractor shall immediately redeploy its workers, equipment, and materials, as necessary, to other portions of the Work to minimize delay and disruption.

3. Additional Warranties and Representations

a. Contractor represents and warrants that it, its employees, and its subcontractors and their employees, shall at all times have the required levels of familiarity with the Site and the Work, training, and ability to comply fully with all applicable laws and contractual requirements for safe and expeditious performance of the Work, including whatever training is or may be required regarding the activities to be performed (including, but not limited to, all training required to address adequately the actual or potential dangers of Contract performance).

b. Contractor represents and warrants that it, its employees, and its subcontractors and their employees, shall at all times have and maintain in good standing any and all certifications and licenses required by applicable federal, state, and other governmental and quasi-governmental requirements applicable to the Work.

c. Contractor represents and warrants that it has studied carefully all requirements of the Specifications regarding procedures for demolition, hazardous waste abatement, or safety practices, specified in the Contract, and prior to submitting its bid, has either (a) verified to its satisfaction that the specified procedures are adequate and sufficient to achieve the results intended by the Contract Documents, or (b) by way of approved "or equal" request or request for clarification and written Addenda, secured changes to the specified procedures sufficient to achieve the results intended by the Contract Documents. Contractor accepts the risk that any specified procedure will result in a completed Project in full compliance with the Contract Documents.

4. Monitoring and Testing

a. District reserves the right, in its sole discretion, to conduct air monitoring, earth monitoring, Work monitoring, and any other tests (in addition to testing required under the agreement or applicable law), to monitor Contract requirements of safe and statutorily compliant work methods and (where applicable) safe re-entry level air standards under state and federal law upon completion of the job, and compliance of the work with periodic and final inspection by public and quasi-public entities having jurisdiction.

b. Contractor acknowledges that District has the right to perform, or cause to be performed, various activities and tests including, but not limited to, pre-abatement, during abatement, and post-abatement air monitoring, that District shall have no obligation to perform said activities and tests, and that a portion of said activities and tests may take place prior to the completion of the Work by Contractor. In the event District elects to perform these activities and tests, Contractor shall afford District ample access to the Site and all areas of the Work as may be necessary for the performance of these activities and tests. Contractor will include the potential impact of these

activities or tests by District in the Contract Price and the Scheduled Completion Date.

c. Notwithstanding District's rights granted by this paragraph, Contractor may retain its own industrial hygiene consultant at Contractor's own expense and may collect samples and may perform tests including, but not limited to, pre-abatement, during abatement, and post-abatement personal air monitoring, and District reserves the right to request documentation of all such activities and tests performed by Contractor relating to the Work and Contractor shall immediately provide that documentation upon request.

5. Compliance with Laws

a. Contractor shall perform safe, expeditious, and orderly work in accordance with the best practices and the highest standards in the hazardous waste abatement, removal, and disposal industry, the applicable law, and the Contract Documents, including, but not limited to, all responsibilities relating to the preparation and return of waste shipment records, all requirements of the law, delivering of all requisite notices, and obtaining all necessary governmental and quasi-governmental approvals.

b. Contractor represents that it is familiar with and shall comply with all laws applicable to the Work or completed Work including, but not limited to, all federal, state, and local laws, statutes, standards, rules, regulations, and ordinances applicable to the Work relating to:

(1) The protection of the public health, welfare and environment;

(2) Storage, handling, or use of asbestos, PCB, lead, petroleum based products, radioactive material, or other hazardous materials;

(3) The generation, processing, treatment, storage, transport, disposal, destruction, or other management of asbestos, PCB, lead, petroleum, radioactive material, or hazardous waste materials or other waste materials of any kind; and

(4) The protection of environmentally sensitive areas such as wetlands and coastal areas.

6. Disposal

a. Contractor has the sole responsibility for determining current waste storage, handling, transportation, and disposal regulations for the job Site and for each waste disposal facility. Contractor must comply fully at its sole cost and expense with these regulations and any applicable law. District may, but is not obligated to, require submittals with this information for it to review consistent with the Contract Documents.

b. Contractor shall develop and implement a system acceptable to District to track hazardous waste from the Site to disposal, including appropriate "Hazardous Waste Manifests" on the EPA form, so that District may track the volume of waste it put in each landfill and receive from each landfill a certificate of receipt.

c. Contractor shall provide District with the name and address of each waste disposal facility prior to any disposal, and District shall have the express right to reject any proposed disposal facility. Contractor shall not use any disposal facility to which District has objected. Contractor shall document actual disposal or destruction of waste at a designated facility by completing a disposal certificate or certificate of destruction forwarding the original to the District.

7. Permits

a. Before performing any of the Work, and at such other times as may be required by applicable law, Contractor shall deliver all requisite notices and obtain the approval of all governmental and quasi-governmental authorities having jurisdiction over the Work. Contractor shall submit evidence satisfactory to District that it and any disposal facility:

(1) have obtained all required permits, approvals, and the like in a timely manner both prior to commencement of the Work and thereafter as and when required by applicable law; and

(2) are in compliance with all such permits, approvals and the regulations.

For example, before commencing any work in connection with the Work involving asbestos-containing materials, or PCBs, or other hazardous materials subject to regulation, Contractor agrees to provide the required notice of intent to renovate or demolish to the appropriate state or federal agency having jurisdiction, by certified mail, return receipt requested, or by some other method of transmittal for which a return receipt is obtained, and to send a copy of that notice to District. Contractor shall not conduct any Work involving asbestos-containing materials or PCBs unless Contractor has first confirmed that the appropriate agency having jurisdiction is in receipt of the required notification. All permits, licenses, and bonds that are required by governmental or quasi-governmental authorities, and all fees, deposits, tap fees, offsite easements, and asbestos and PCB disposal facilities expenses necessary for the prosecution of the Work, shall be procured and paid for by Contractor. Contractor shall give all notices and comply with all the applicable laws bearing on the conduct of the Work as drawn and specified. If Contractor observes or reasonably should have observed that Plans and Specifications and other Contract Documents are at variance therewith, it shall be responsible for promptly notifying District in writing of such fact. If Contractor performs any Work contrary to applicable laws, it shall bear all costs arising therefrom.

b. In the case of any permits or notices held in District's name or of necessity to be made in District's name, District shall cooperate with Contractor in securing the permit or giving the notice, but the Contractor shall prepare for District review and execution upon approval, all necessary applications, notices, and other materials.

8. Indemnification

To the fullest extent permitted by law, the indemnities and limitations of liability expressed throughout the Contract Documents apply with equal force and effect to any claims or liabilities imposed or existing by virtue of the removal, abatement, and disposal of hazardous waste. This includes, but is not limited to, liabilities connected to the selection and use of a waste disposal facility, a waste transporter, personal injury, property damage, loss of use of property, damage to the environment or natural resources, or "disposal" and "release" of materials associated with the Work (as defined in 42 U.S.C. § 960l *et seq*.).

9. Termination

District shall have an absolute right to terminate for default immediately without notice and without an opportunity to cure should Contractor knowingly or recklessly commit a material breach of the terms of the Contract Documents, or any applicable law, on any matter involving the exposure of persons or property to hazardous waste. However, if the breach of contract exposing persons or property to hazardous waste is due solely to an ordinary, unintentional, and non-reckless failure to exercise reasonable care, then the procedures for termination for cause shall apply without modification.

END OF DOCUMENT

DOCUMENT 01 11 00

SUMMARY OF WORK

PART 1 - GENERAL

1.01 WORK COVERED BY CONTRACT DOCUMENTS

A. The Work of this Contract for Tamalpais High School – Swimming Pool Replaster and other items not specifically mentioned herein.

B. The Tamalpais Union High School District is working on a program to upgrade existing athletic facilities. The Tamalpais High School – Swimming Pool Replaster project includes the demolition and reconstruction of the existing swimming pool plaster and tile finish, repair of existing finishes and pool deck, replacement of equipment, and minor improvements to existing facilities including fencing, gates, walls, and signage.

C. The work includes but is not limited to all work as shown by these drawings and specifications.

D. The Work shall include all the work as shown and specified except work indicated "N.I.C." or "Not in Contract" or "Future."

1.02 CONTRACTS

A. The Work will be under a single lump sum contract.

B. The Work indicated "N.I.C." or "Not in Contract" will be provided by the Owner directly or under separate contract.

1.03 WORK BY OTHERS – N/A

1.04 CODES, REGULATIONS, AND STANDARDS

A. The codes, regulations, and standards adopted by the state and federal agencies having jurisdiction shall govern minimum requirements for this Project. Where codes, regulations, and standards conflict with the Contract Documents, these conflicts shall be brought to the immediate attention of the District and the Architect.

B. Codes, regulations, and standards shall be as published effective as of date of bid opening, unless otherwise specified or indicated.

1.05 PROJECT RECORD DOCUMENTS

A. Contractor shall maintain on Site one set of the following record documents; Contractor shall record actual revisions to the Work:

(1) Contract Drawings.

(2) Specifications.

(3) Addenda.

(4) Change Orders and other modifications to the Contract.

(5) Reviewed shop drawings, product data, and samples.

(6) Field test records.

(7) Inspection certificates.

(8) Manufacturer's certificates.

B. Contractor shall store Record Documents separate from documents used for construction. Provide files, racks, and secure storage for Record Documents and samples.

C. Contractor shall record information concurrent with construction progress.

D. Specifications: Contractor shall legibly mark and record at each product section of the Specifications the description of the actual product(s) installed, including the following:

(1) Manufacturer's name and product model and number.

(2) Product substitutions or alternates utilized.

(3) Changes made by Addenda and Change Orders and written directives.

1.06 EXAMINATION OF EXISTING CONDITIONS

A. Contractor shall be held to have examined the Project Site and acquainted itself with the conditions of the Site and of the streets or roads approaching the Site.

B. Prior to commencement of Work, Contractor shall survey the Site and existing buildings and improvements to observe existing damage and defects such as cracks, sags, broken, missing or damaged glazing, other building elements and Site improvements, and other damage.

C. Should Contractor observe cracks, sags, and other damage to and defects of the Site and adjacent buildings, paving, and other items not indicated in the Contract Documents, Contractor shall immediately report same to the District and the Architect.

1.07 CONTRACTOR'S USE OF PREMISES

A. If unoccupied and only with District’s prior written approval, Contractor may use the building(s) at the Project Site without limitation for its operations, storage, and office facilities for the performance of the Work. If the District chooses to beneficially occupy any building(s), Contractor must obtain the District's written approval for Contractor's use of spaces and types of operations to be performed within the building(s) while so occupied. Contractor's access to the building(s) shall be limited to the areas indicated.

B. If the space at the Project Site is not sufficient for Contractor's operations, storage, office facilities and/or parking, Contractor shall arrange and pay for any additional facilities needed by Contractor.

C. Contractor shall not interfere with use of or access to occupied portions of the building(s) or adjacent property.

D. Contractor shall maintain corridors, stairs, halls, and other exit-ways of building clear and free of debris and obstructions at all times.

E. No one other than those directly involved in the demolition and construction, or specifically designated by the District or the Architect shall be permitted in the areas of work during demolition and construction activities.

F. The Contractor shall install the construction fence and maintain that it will be locked when not in use. Keys to this fencing will be provided to the District.

1.08 PROTECTION OF EXISTING STRUCTURES AND UTILITIES

A. The Drawings show above-grade and below-grade structures, utility lines, and other installations that are known or believed to exist in the area of the Work. Contractor shall locate these existing installations before proceeding with excavation and other operations that could damage same; maintain them in service, where appropriate; and repair damage to them caused by the performance of the Work. Should damage occur to these existing installations, the costs of repair shall be at the Contractor's expense and made to the District's satisfaction.

B. Contractor shall be alert to the possibility of the existence of additional structures and utilities. If Contractor encounters additional structures and utilities, Contractor will immediately report to the District for disposition of same as indicated in the General Conditions.

1.09 UTILITY SHUTDOWNS AND INTERRUPTIONS

A. Contractor shall give the District a minimum of three (3) days written notice in advance of any need to shut off existing utility services or to effect equipment interruptions. The District will set exact time and duration for shutdown, and will assist Contractor with shutdown. Work required to re-establish utility services shall be performed by the Contractor.

B. Contractor shall obtain District's written approval as indicated in the General Conditions in advance of deliveries of material or equipment or other activities that may conflict with District's use of the building(s) or adjacent facilities.

1.10 STRUCTURAL INTEGRITY

A. Contractor shall be responsible for and supervise each operation and work that could affect structural integrity of various building elements, both permanent and temporary.

B. Contractor shall include structural connections and fastenings as indicated or required for complete performance of the Work.

PART 2 – PRODUCTS Not Used.

PART 3 – EXECUTION Not Used.

END OF DOCUMENT

DOCUMENT 01 21 00

ALLOWANCE

PART 1 GENERAL

1.1 SECTION INCLUDES

A. Non-specified work.

1.2 RELATED SECTIONS

A. Document 01 10 00 (Summary of Work)

B. Document 01 29 00 (Payments and Completion)

C. Document 01 32 19 (Submittal Procedures)

1.3 ALLOWANCES

A. Included in the Contract, a stipulated sum/price of **$50,000.00** as an allowance for Unforeseen Conditions within the limits set forth in the Contract Documents. This Allowance shall not be utilized without written approval by the District.

B. Contractor's costs, without overhead and profit, for products, delivery, installation, labor, insurance, payroll, taxes, bonding and equipment rental will be included in Allowance Expenditure Directive authorizing expenditure of funds from this Allowance. No overhead and profit shall be added to the Allowance Expenditure Directive.

C. Funds will be drawn from Allowance only with District approval evidenced by an Allowance Expenditure Directive.

D. At Contract closeout, Contractor agrees that unused funds remaining in Allowance will be credited to District by Change Order.

E. Whenever costs are more than the Allowance, the amount covered by the Allowance will be approved at cost (i.e., only the amount within the Allowance will be approved for payment). Contractor must follow the Change Order procedure to adjust the Contract Price for amounts in excess of the Allowance.

PART 2 PRODUCTS

Not used.

PART 3 EXECUTION

Not used.

END OF DOCUMENT

DOCUMENT 01 25 13

PRODUCT OPTIONS AND SUBSTITUTIONS

PART 1 - GENERAL

1.01 RELATED DOCUMENTS AND PROVISIONS

All Contract Documents should be reviewed for applicable provisions related to the provisions in this document, including without limitation:

A. Instructions to Bidders;

B. General Conditions, including, without limitation, Substitutions For Specified Items; and

C. Special Conditions.

1.02 SUBSTITUTIONS OF MATERIALS AND EQUIPMENT

A. Catalog numbers and specific brands or trade names followed by the designation "or equal" are used in conjunction with material and equipment required by the Specifications to establish the standards of quality, utility, and appearance required. Substitutions which are equal in quality, utility, and appearance to those specified may be reviewed subject to the provisions of the General Conditions.

B. Wherever more than one manufacturer's product is specified, the first-named product is the basis for the design used in the work and the use of alternative-named manufacturers' products or substitutes may require modifications in that design. If such alternatives are proposed by Contractor and are approved by the District and/or the Architect, Contractor shall assume all costs required to make necessary revisions and modifications of the design resulting from the substitutions requested by the Contractor.

C. When materials and equipment are specified by first manufacturer's name and product number, second manufacturer's name and "or approved equal," supporting data for the second product, if proposed by Contractor, shall be submitted in accordance with the requirements for substitutions. The District’s Board has found and determined that certain item(s) shall be used on this Project based on the purpose(s) indicated pursuant to Public Contract Code section 3400(c). These findings, as well as the products and brand or trade names, have been identified in the Notice to Bidders.

D. The Contractor will not be allowed to substitute specified items unless the request for substitution is submitted as follows:

(1) District must receive any notice of request for substitution of a specified item a minimum of ten (10) calendar days prior to bid opening.

(2) Within 35 days after the date of the Notice of Award, the Contractor shall submit data substantiating the request(s) for all substitution(s) containing sufficient information to assess acceptability of product or system and impact on Project, including, without limitation, the requirements specified in the Special Conditions and the technical Specifications. Insufficient information shall be grounds for rejection of substitution.

E. If the District and/or Architect, in reviewing proposed substitute materials and equipment, require revisions or corrections to be made to previously accepted Shop Drawings and supplemental supporting data to be resubmitted, Contractor shall promptly do so. If any proposed substitution is judged by the District and/or Architect to be unacceptable, the specified material or equipment shall be provided.

F. Samples may be required. Tests required by the District and/or Architect for the determination of quality and utility shall be made at the expense of Contractor, with acceptance of the test procedure first given by the District.

G. In reviewing the supporting data submitted for substitutions, the District and/or Architect will use for purposes of comparison all the characteristics of the specified material or equipment as they appear in the manufacturer's published data even though all the characteristics may not have been particularly mentioned in the Contract Documents. If more than two (2) submissions of supporting data are required, the cost of reviewing the additional supporting data shall be borne by Contractor, and the District will deduct the costs from the Contract Price. The Contractor shall be responsible for any re-design costs occasioned by District's acceptance and/or approval of any substitute.

H. The Contractor shall, in the event that a substitute is less costly than that specified, credit the District with one hundred percent (109%) of the net difference between the substitute and the originally specified material. In this event, the Contractor agrees to execute a deductive Change Order to reflect that credit. In the event Contractor furnishes a material, process, or article more expensive than that specified, the difference in the cost of that material, process, or article so furnished shall be borne by Contractor.

I. In no event shall the District be liable for any increase in Contract Price or Contract Time due to any claimed delay in the evaluation of any proposed substitute or in the acceptance or rejection of any proposed substitute.

PART 2 – PRODUCTS Not Used.

PART 3 – EXECUTION Not Used.

END OF DOCUMENT

DOCUMENT 01 26 00

CHANGES IN THE WORK

CONTRACTOR SHALL COMPLY WITH ALL APPLICABLE PROVISIONS IN THE AGREEMENT, GENERAL CONDITIONS, AND SPECIAL CONDITIONS, IF USED, RELATED TO CHANGES AND/OR REQUESTS FOR CHANGES.

END OF DOCUMENT

DOCUMENT 01 29 00

APPLICATION FOR PAYMENT AND CONDITIONAL AND UNCONDITIONAL WAIVER AND RELEASE FORMS

CONTRACTOR SHALL COMPLY WITH ALL PROVISIONS IN THE GENERAL CONDITIONS RELATED TO APPLICATIONS FOR PAYMENT AND/OR PAYMENTS.

CONDITIONAL WAIVER AND RELEASE
ON PROGRESS PAYMENT
(CIVIL CODE SECTION 8132)

NOTICE: THIS DOCUMENT WAIVES THE CLAIMANT'S LIEN, STOP PAYMENT NOTICE, AND PAYMENT BOND RIGHTS EFFECTIVE ON RECEIPT OF PAYMENT. A PERSON SHOULD NOT RELY ON THIS DOCUMENT UNLESS SATISFIED THAT THE CLAIMANT HAS RECEIVED PAYMENT.

Name of Claimant: _____

Name of Customer: _____

Job Location: _____

Owner: _____

Through Date: _____

Conditional Waiver and Release

This document waives and releases lien, stop payment notice, and payment bond rights the claimant has for labor and service provided, and equipment and material delivered, to the customer on this job through the Through Date of this document. Rights based upon labor or service provided, or equipment or material delivered, pursuant to a written change order that has been fully executed by the parties prior to the date that this document is signed by the claimant, are waived and released by this document, unless listed as an Exception below. This document is effective only on the claimant's receipt of payment from the financial institution on which the following check is drawn:

Maker of Check: _____

Amount of Check: $_____

Check Payable to: _____

Exceptions

This document does not affect any of the following:

(1) Retentions.

(2) Extras for which the claimant has not received payment.

(3) The following progress payments for which the claimant has previously given a conditional waiver and release but has not received payment:

Date(s) of waiver and release: _____

Amount(s) of unpaid progress payment(s): $_____

(4) Contract rights, including (A) a right based on rescission, abandonment, or breach of contract, and (B) the right to recover compensation for work not compensated by the payment.

Claimant's Signature: _____

Claimant's Title: _____

Date of Signature: _____

UNCONDITIONAL WAIVER AND RELEASE
ON PROGRESS PAYMENT
(CIVIL CODE SECTION 8134)

NOTICE TO CLAIMANT: THIS DOCUMENT WAIVES AND RELEASES LIEN, STOP PAYMENT NOTICE, AND PAYMENT BOND RIGHTS UNCONDITIONALLY AND STATES THAT YOU HAVE BEEN PAID FOR GIVING UP THOSE RIGHTS. THIS DOCUMENT IS ENFORCEABLE AGAINST YOU IF YOU SIGN IT, EVEN IF YOU HAVE NOT BEEN PAID. IF YOU HAVE NOT BEEN PAID, USE A CONDITIONAL WAIVER AND RELEASE FORM.

Name of Claimant: _____

Name of Customer: _____

Job Location: _____

Owner: _____

Through Date: _____

Unconditional Waiver and Release

This document waives and releases lien, stop payment notice, and payment bond rights the claimant has for labor and service provided, and equipment and material delivered, to the customer on this job through the Through Date of this document. Rights based upon labor or service provided, or equipment or material delivered, pursuant to a written change order that has been fully executed by the parties prior to the date that this document is signed by the claimant, are waived and released by this document, unless listed as an Exception below. The claimant has received the following progress payment: $_____

Exceptions

This document does not affect any of the following:

(1) Retentions.

(2) Extras for which the claimant has not received payment.

(3) Contract rights, including (A) a right based on rescission, abandonment, or breach of contract, and (B) the right to recover compensation for work not compensated by the payment.

Claimant's Signature: _____

Claimant's Title: _____

Date of Signature: _____

CONDITIONAL WAIVER AND RELEASE
ON FINAL PAYMENT
(CIVIL CODE SECTION 8136)

NOTICE: THIS DOCUMENT WAIVES THE CLAIMANT'S LIEN, STOP PAYMENT NOTICE, AND PAYMENT BOND RIGHTS EFFECTIVE ON RECEIPT OF PAYMENT. A PERSON SHOULD NOT RELY ON THIS DOCUMENT UNLESS SATISFIED THAT THE CLAIMANT HAS RECEIVED PAYMENT.

Name of Claimant: _____

Name of Customer: _____

Job Location: _____

Owner: _____

Conditional Waiver and Release

This document waives and releases lien, stop payment notice, and payment bond rights the claimant has for labor and service provided, and equipment and material delivered, to the customer on this job. Rights based upon labor or service provided, or equipment or material delivered, pursuant to a written change order that has been fully executed by the parties prior to the date that this document is signed by the claimant, are waived and released by this document, unless listed as an Exception below. This document is effective only on the claimant's receipt of payment from the financial institution on which the following check is drawn:

Maker of Check:

Amount of Check: $_____

Check Payable to: _____

Exceptions

This document does not affect any of the following: _____

Disputed claims for extras in the amount of: $_____

Claimant's Signature: _____

Claimant's Title: _____

Date of Signature: _____

UNCONDITIONAL WAIVER AND RELEASE
ON FINAL PAYMENT
(CIVIL CODE SECTION 8138)

NOTICE TO CLAIMANT: THIS DOCUMENT WAIVES AND RELEASES LIEN, STOP PAYMENT NOTICE, AND PAYMENT BOND RIGHTS UNCONDITIONALLY AND STATES THAT YOU HAVE BEEN PAID FOR GIVING UP THOSE RIGHTS. THIS DOCUMENT IS ENFORCEABLE AGAINST YOU IF YOU SIGN IT, EVEN IF YOU HAVE NOT BEEN PAID. IF YOU HAVE NOT BEEN PAID, USE A CONDITIONAL WAIVER AND RELEASE FORM.

Name of Claimant: _____

Name of Customer: _____

Job Location: _____

Owner: _____

Unconditional Waiver and Release

This document waives and releases lien, stop payment notice, and payment bond rights the claimant has for all labor and service provided, and equipment and material delivered, to the customer on this job. Rights based upon labor or service provided, or equipment or material delivered, pursuant to a written change order that has been fully executed by the parties prior to the date that this document is signed by the claimant, are waived and released by this document, unless listed as an Exception below. The claimant has been paid in full.

Exceptions

This document does not affect any of the following: _____

Disputed claims for extras in the amount of: $_____

Claimant's Signature: _____

Claimant's Title: _____

Date of Signature: _____

DOCUMENT 01 33 00

SUBMITTALS

PART 1 - GENERAL

1.01 RELATED DOCUMENTS AND PROVISIONS:

All Contract Documents should be reviewed for applicable provisions related to the provisions in this document, including without limitation:

A. General Conditions, including, without limitation, Contractor's Submittals and Schedules, Drawings and Specifications;

B. Special Conditions.

1.02 SECTION INCLUDES:

A. Definitions:

(1) Shop Drawings and Product Data are as indicated in the General Conditions and include, but are not limited to, fabrication, erection, layout and setting drawings, formwork and falsework drawings, manufacturers' standard drawings, descriptive literature, catalogues, brochures, performance and test data, wiring and control diagrams. In addition, there are other drawings and descriptive data pertaining to materials, equipment, piping, duct and conduit systems, and methods of construction as may be required to show that the materials, equipment or systems and all positions conform to the requirement of the Contract Documents, including, without limitation, the Drawings.

(2) "Manufactured" applies to standard units usually mass-produced; "fabricated" means specifically assembled or made out of selected materials to meet design requirements. Shop Drawings shall establish the actual detail of manufactured or fabricated items, indicated proper relation to adjoining work and amplify design details of mechanical and electrical equipment in proper relation to physical spaces in the structure.

(3) Manufacturer's Instructions: Where any item of Work is required by the Contract Documents to be furnished, installed, or performed, at a minimum, in accordance with a specified product manufacturer's instructions, the Contractor shall procure and distribute copies of these to the District, the Architect, and all other concerned parties and shall furnish, install, or perform the work, at a minimum, in accordance with those instructions.

B. Samples, Shop Drawings, Product Data, and other items as specified, in accordance with the following requirements:

(1) Contractor shall submit all Shop Drawings, Product Data, and Samples to the District, the Architect, the Project Inspector, and the Construction Manager.

(2) Contractor shall comply with all time frames herein and in the General Conditions and, in any case, shall submit required information in sufficient time to permit proper consideration and action before ordering any materials or items represented by such Shop Drawings, Product Data, and/or Samples.

(3) Contractor shall allow sufficient time so that no delay occurs due to required lead time in ordering or delivery of any item to the Site. Contractor shall be responsible for any delay in progress of Work due to its failure to observe these requirements.

(4) Time for completion of Work shall not be extended on account of Contractor's failure to promptly submit Shop Drawings, Product Data, and/or Samples.

(5) Reference numbers on Shop Drawings shall have Architectural and/or Engineering Contract Drawings reference numbers for details, sections, and "cuts" shown on Shop Drawings. These reference numbers shall be in addition to any numbering system that Contractor chooses to use or has adopted as standard.

(6) When the magnitude or complexity of submittal material prevents a complete review within the stated time frame, Contractor shall make this submittal in increments to avoid extended delays.

(7) Contractor shall certify on submittals for review that submittals conform to Contract requirements. Also certify that Contractor-furnished equipment can be installed in allocated space. In event of any variance, Contractor shall specifically state in transmittal and on Shop Drawings, portions vary and require approval of a substitute. Submittals shall not be used as a means of requesting a substitution.

(8) Unless specified otherwise, sampling, preparation of samples, and tests shall be in accordance with the latest standard of the American Society for Testing and Materials.

(9) Upon demand by Architect or District, Contractor shall submit samples of materials and/or articles for tests or examinations and consideration before Contractor incorporates same in Work. Contractor shall be solely responsible for delays due to sample(s) not being submitted in time to allow for tests. Acceptance or rejection will be expressed in writing. Work shall be equal to approved samples in every respect. Samples that are of value after testing will remain the property of Contractor.

C. Submittal Schedule:

(1) Contractor shall prepare its proposed submittal schedule that is coordinated with the proposed construction schedule and submit both to the District within ten (10) days after the date of the Notice to Proceed. Contractor's proposed schedules shall become the Project Construction Schedule and the Project Submittal Schedule after each is approved by the District.

(2) Contractor is responsible for all lost time should the initial submittal be rejected, marked "revise and resubmit", etc.

(3) All Submittals shall be forwarded to the District by the date indicated on the approved Submittal Schedule, unless an earlier date is necessary to maintain the Construction Schedule, in which case those Submittals shall be forwarded to the District so as not to delay the Construction Schedule.

(4) Contractor may be assessed $109 a day for each day it is late in submitting a shop drawing or sample. No extensions of time will be granted to Trade Contractor or any Subcontractor because of its failure to have shop drawings and samples submitted in accordance with the Schedule.

1.03 SHOP DRAWINGS:

A. Contractor shall submit one reproducible transparency and six (6) opaque reproductions. The District will review and return the reproducible copy and one (1) opaque reproduction to Contractor.

B. Before commencing installation of any Work, the Contractor shall submit and receive approval of all drawings, descriptive data, and material list(s) as required to accomplish Work.

C. Review of Shop Drawings is regarded as a service to assist Contractor and in all cases original Contract Documents shall take precedence as outlined under General Conditions.

D. No claim for extra time or payment shall be based on work shown on Shop Drawings unless the claim is (1) noted on Contractor's transmittal letter accompanying Shop Drawings and (2) Contractor has complied with all applicable provisions of the General Conditions, including, without limitation, provisions regarding changes and payment, and all required written approvals.

E. District shall not review Shop Drawings for quantities of materials or number of items supplied.

F. District's and/or Architect’s review of Shop Drawing will be general. District and/or Architect review does not relieve Contractor of responsibility for dimensions, accuracy, proper fitting, construction of Work, furnishing of materials, or Work required by Contract Documents and not indicated on Shop Drawings. The District’s and/or Architect’s review of Shop Drawings is not to be construed as approving departures from Contract Documents.

G. Review of Shop Drawings and Schedules does not relieve Contractor from responsibility for any aspect of those Drawings or Schedules that is a violation of local, County, State, or Federal laws, rules, ordinances, or rules and regulations of commissions, boards, or other authorities or utilities having jurisdiction.

H. Before submitting Shop Drawings for review, Contractor shall check Shop Drawings of its subcontractors for accuracy, and confirm that all Work

contiguous with and having bearing on other work shown on Shop Drawings is accurately drawn and in conformance with Contract Documents.

I. Submitted drawings and details must bear stamp of approval of Contractor:

(1) Stamp and signature shall clearly certify that Contractor has checked Shop Drawings for compliance with Drawings.

(2) If Contractor submits a Shop Drawing without an executed stamp of approval, or whenever it is evident (despite stamp) that Drawings have not been checked, the District and/or Architect will not consider them and will return them to the Contractor for revision and resubmission. In that event, it will be deemed that Contractor has not complied with this provision and Contractor shall bear risk of all delays to same extent as if it had not submitted any Shop Drawings or details.

J. Submission of Shop Drawings (in either original submission or when resubmitted with correction) constitutes evidence that Contractor has checked all information thereon and that it accepts and is willing to perform Work as shown.

K. Contractor shall pay for cost of any changes in construction due to improper checking and coordination. Contractor shall be responsible for all additional costs, including coordination. Contractor shall be responsible for costs incurred by itself, the District, the Architect, the Project Inspector, the Construction Manager, any other Subcontractor or contractor, etc., due to improperly checked and/or coordination of submittals.

L. Shop Drawings must clearly delineate the following information:

(1) Project name and address.

(2) Specification number and description.

(3) Architect's name and project number.

(4) Shop Drawing title, number, date, and scale.

(5) Names of Contractor, Subcontractor(s) and fabricator.

(6) Working and erection dimensions.

(7) Arrangements and sectional views.

(8) Necessary details, including complete information for making connections with other Work.

(9) Kinds of materials and finishes.

(10) Descriptive names of materials and equipment, classified item numbers, and locations at which materials or equipment are to be installed in the Work. Contractor shall use same reference identification(s) as shown on Contract Drawings.

M. Contractor shall prepare composite drawings and installation layouts when required to solve tight field conditions.

(1) Shop Drawings shall consist of dimensioned plans and elevations and must give complete information, particularly as to size and location of sleeves, inserts, attachments, openings, conduits, ducts, boxes, structural interferences, etc.

(2) Contractor shall coordinate these composite Shop Drawings and installation layouts in the field between itself and its Subcontractor(s) for proper relationship to the Work, the work of other trades, and the field conditions. The Contractor shall check and approve all submittal(s) before submitting them for final review.

1.04 PRODUCT DATA OR NON-REPRODUCIBLE SUBMITTALS:

A. Contractor shall submit manufacturer's printed literature in original form. Any fading type of reproduction will not be accepted. Contract must submit a minimum of six (6) each, to the District. District shall return one (1) to the Contractor, who shall reproduce whatever additional copies it requires for distribution.

B. Contractor shall submit six (6) copies of a complete list of all major items of mechanical, plumbing, and electrical equipment and materials in accordance with the approved Submittal Schedule, except as required earlier to comply with the approved Construction Schedule. Other items specified are to be submitted prior to commencing Work. Contractor shall submit items of like kind at one time in a neat and orderly manner. Partial lists will not be acceptable.

C. Submittals shall include manufacturer's specifications, physical dimensions, and ratings of all equipment. Contractor shall furnish performance curves for all pumps and fans. Where printed literature describes items in addition to that item being submitted, submitted item shall be clearly marked on sheet and superfluous information shall be crossed out. If highlighting is used, Contractor shall mark all copies.

D. Equipment submittals shall be complete and include space requirements, weight, electrical and mechanical requirements, performance data, and supplemental information that may be requested.

E. Imported Materials Certification must be submitted at least ten (10) days before material is delivered.

1.05 SAMPLES:

A. Contractor shall submit for approval Samples as required and within the time frame in the Contract Documents. Materials such as concrete, mortar, etc., which require on-site testing will be obtained from Project Site.

B. Contractor shall submit four (4) samples except where greater or lesser number is specifically required by Contract Documents including, without limitation, the Specifications.

(1) Samples must be of sufficient size and quality to clearly illustrate functional characteristics, with integrally related parts and attachment devices.

(2) Samples must show full range of texture, color, and pattern.

C. Contractor shall make all Submittals, unless it has authorized Subcontractor(s) to submit and Contractor has notified the District in writing to this effect.

D. Samples to be shipped prepaid or hand-delivered to the District.

E. Contractor shall mark samples to show name of Project, name of Contractor submitting, Contract number and segment of Work where representative Sample will be used, all applicable Specifications Sections and documents, Contract Drawing Number and detail, and ASTM or FS reference, if applicable.

F. Contractor shall not deliver any material to Site prior to receipt of District's and/or Architect's completed written review and approval. Contractor shall furnish materials equal in every respect to approved Samples and execute Work in conformance therewith.

G. District's and/or Architect's review, acceptance, and/or approval of Sample(s) will not preclude rejections of any material upon discovery of defects in same prior to final acceptance of completed Work.

H. After a material has been approved, no change in brand or make will be permitted.

I. Contractor shall prepare its Submittal Schedule and submit Samples of materials requiring laboratory tests to specified laboratory for testing not less than ninety (90) days before such materials are required to be used in Work.

J. Samples which are rejected must be resubmitted promptly after notification of rejection and be marked "Resubmitted Sample" in addition to other information required.

K. Field Samples and Mock-Ups are to be removed by Contractor at District's direction:

(1) Size: As Specified.

(2) Furnish catalog numbers and similar data, as requested.

1.06 REVIEW AND RESUBMISSION REQUIREMENTS:

A. The District will arrange for review of Sample(s), Shop Drawing(s), Product Data, and other submittal(s) by appropriate reviewer and return to Contractor as provided below within twenty-one (21) days after receipt or within twenty-one (21) days after receipt of all related information necessary for such review, whichever is later.

B. One (1) copy of product or materials data will be returned to Contractor with the review status.

C. Samples to be incorporated into the Work will be returned to Contractor, together with a written notice designating the Sample with the appropriate review status and indicating errors discovered on review, if any. Other Samples will not be returned, but the same notice will be given with respect thereto, and that notice shall be considered a return of the Sample.

D. Contractor shall revise and resubmit any Sample(s), Shop Drawing(s), Product Data, and other submittal(s) as required by the reviewer. Such resubmittals will be reviewed and returned in the same manner as original Sample(s), Shop Drawing(s), Product Data, and other submittal(s), within fourteen (14) days after receipt thereof or within fourteen (14) days after receipt of all related information necessary for such review. Such resubmittal shall not delay the Work.

E. Contractor may proceed with any of the Work covered by Sample(s), Shop Drawing(s), Product Data, and other submittal(s) upon its return if designated as no exception taken, or revise as noted, provided the Contractor proceeds in accordance with the District and/or the Architect's notes and comments.

F. Contractor shall not begin any of the work covered by a Sample(s), Shop Drawing(s), Product Data, and other submittal(s), designated as revise and resubmit or rejected, until a revision or correction thereof has been reviewed and returned to Contractor.

G. Sample(s), Shop Drawing(s), Product Data, and other submittal(s) designated as revise and resubmit or rejected and requiring resubmittal, shall be revised or corrected and resubmitted to the District no later than fourteen (14) days or a shorter period as required to comply with the approved Construction Schedule, after its return to Contractor.

H. Neither the review nor the lack of review of any Sample(s), Shop Drawing(s), Product Data, and other submittal(s) shall waive any of the requirements of the Contract Documents, or relieve Contractor of any obligation thereunder.

I. District's and/or Architect's review of Shop Drawings does not relieve the Contractor of responsibility for any errors that may exist. Contractor is responsible for the dimensions and design of adequate connections and details and for satisfactory construction of all the Work.

PART 2 – PRODUCTS Not Used.

PART 3 - EXECUTION Not Used.

END OF DOCUMENT

DOCUMENT 01 35 13.23

SITE STANDARDS

PART 1 – GENERAL

1.01 RELATED DOCUMENTS AND PROVISIONS:

All Contract Documents should be reviewed for applicable provisions related to the provisions in this document, including without limitation:

A. General Conditions, including without limitation, Site Access, Conditions, and Regulations;

B. Special Conditions;

C. Drug-Free Workplace Certification;

D. Tobacco-Free Environment Certification;

E. Criminal Background Investigation/Fingerprinting Certification;

F. Temporary Facilities and Controls.

1.02 REQUIREMENTS OF THE DISTRICT:

A. Drug-Free Schools and Safety Requirements:

(1) All school sites and other District Facilities have been declared "Drug-Free Zones." No drugs, alcohol and/or smoking are allowed at any time in any buildings and/or grounds on District property. No students, staff, visitors, or contractors are to use drugs on these sites.

(2) Smoking and the use of tobacco products by all persons is prohibited on or in District property. District property includes school buildings, school grounds, school-owned vehicles and vehicles owned by others while on District property. Contractor shall post: "Non-Smoking Area" in a highly visible location in each work area, staging area, and parking area. Contractor may designate a smoking area outside of District property within the public right-of-way, provided that this area remains quiet and unobtrusive to adjacent neighbors. This smoking area is to be kept clean at all times.

(3) Contractor shall ensure that no alcohol, firearms, weapons, or controlled substances enter or are used at the Site. Contractor shall immediately remove from the Site and terminate the employment of any employee(s) found in violation of this provision.

B. Language: Profanity or other unacceptable and/or loud language will not be tolerated, "Cat calls" or other derogatory language toward students, staff, volunteers, parents or public will not be allowed.

C. Disturbing the Peace (Noise and Lighting):

(1) Contractor shall observe the noise ordinance of the Site at all times including, without limitation, all applicable local, city, and/or state laws, ordinances, and/or regulations regarding noise and allowable noise levels.

(2) The use of radios, etc., shall be controlled to keep all sound at a level that cannot be heard beyond the immediate area of use. District reserves the right to prohibit the use of radios at the Site, except for mobile phones or other handheld communication radios.

(3) If portable lights are used after dark, all light must be located so as not to direct light into neighboring property.

D. Traffic:

(1) Driving on the Premises shall be limited to periods when students and public are not present. If driving or deliveries must be made during the school hours, two (2) or more ground guides shall lead the vehicle across the area of travel. In no case shall driving take place across playgrounds or other pedestrian paths during recess, lunch, and/or class period changes. The speed limit on-the Premises shall be five (5) miles per hour (maximum) or less if conditions require.

(2) All paths of travel for deliveries, including without limitation, material, equipment, and supply deliveries, shall be reviewed and approved by District in advance. Any damage will be repaired to the pre-damaged condition by the Contractor.

(3) District shall designate a construction entry to the Site. If Contractor requests, District determines it is required, and to the extent possible, District shall designate a staging area so as not to interfere with the normal functioning of school facilities. Location of gates and fencing shall be approved in advance with District and at Contractor's expense.

(4) Parking areas shall be reviewed and approved by District in advance. No parking is to occur under the drip line of trees or in softscape areas that could otherwise be damaged.

E. All of the above shall be observed and complied with by the Contractor and all workers on the Site. Failure to follow these directives could result in individual(s) being suspended or removed from the work force at the discretion of the District. The same rules and regulations shall apply equally to delivery personnel, inspectors, consultants, and other visitors to the Site.

PART 2 - PRODUCTS Not Used.

PART 3 - EXECUTION Not Used.

END OF DOCUMENT

DOCUMENT 01 41 00

REGULATORY REQUIREMENTS

PART 1 - GENERAL

1.01 RELATED DOCUMENTS AND PROVISIONS:

All Contract Documents should be reviewed for applicable provisions related to the provisions in this document, including without limitation:

A. General Conditions, including, without limitation, Obtaining of Permits, Licenses and Registrations and Work to Comply with All Applicable Laws and Regulations;

B. Special Conditions; and

C. Quality Control.

1.02 DESCRIPTION:

This section covers the general requirements for regulatory requirements pertaining to the Work and is supplementary to all other regulatory requirements mentioned or referenced elsewhere in the Contract Documents.

1.03 REQUIREMENTS OF REGULATORY AGENCIES:

A. All statutes, ordinances, laws, rules, codes, regulations, standards, and the lawful orders of all public authorities having jurisdiction over the Work, are hereby incorporated into these Contract Documents as if repeated in full herein and are intended to be included in any reference to Code or Building Code, unless otherwise specified, including, without limitation, the references in the list below. Contractor shall make available at the Site copies of all the listed documents applicable to the Work as the District and/or Architect may request, including, without limitation, applicable portions of the California Code of Regulations ("CCR").

(1) California Building Standards Administrative Code, Part 1, Title 24, CCR.

(2) California Building Code (CBC), Part 2, Title 24, CCR; (International Building Code volumes 1-2 and California Amendments).

(3) California Electrical Code (CEC), Part 3, Title 24, CCR; (National Electrical Code and California Amendments).

(4) California Mechanical Code (CMC), Part 4, Title 24, CCR; (Uniform Mechanical Code and California Amendments).

(5) California Plumbing Code (CPC), Part 5, Title 24, CCR; (Uniform Plumbing Code and California Amendments).

(6) California Fire Code (CFC), Part 9, Title 24, CCR; (International Fire Code and California Amendments).

(7) California Green Building Standards Code (CALGreen), Part 11, Title 24, CCR.

(8) California Referenced Standards Code, Part 12, Title 24, CCR.

(9) State Fire Marshal Regulations, Public Safety, Title 19, CCR.

(10) Partial List of Applicable National Fire Protection Association (NFPA) Standards:

(a) NFPA 13 - Automatic Sprinkler System.

(b) NFPA 14 - Standpipes Systems.

(c) NFPA 17A - Wet Chemical System

(d) NFPA 24 - Private Fire Mains.

(e) (California Amended) NFPA 72 - National Fire Alarm Codes.

(f) NFPA 253 - Critical Radiant Flux of Floor Covering System.

(g) NFPA 2001 - Clean Agent Fire Extinguishing Systems.

(11) California Division of the State Architect interpretation of Regulations ("DSA IR"), including, without limitation:

(a) DSA IR A-6 — Construction Change Document Submittal and Approval Processes.

(b) DSA IR A-7 — Project Inspector Certification and Approval.

(c) DSA IR A-8 — Project Inspector and Assistant Inspector Duties and Performance.

(d) DSA IR A-12 — Assistant Inspector Approval.

(12) DSA Procedures ("DSA PR")

(a) DSA PR 13-01 – Construction Oversight Process

(b) DSA PR 13-02 – Project Certification Process

B. This Project shall be governed by applicable regulations, including, without limitation, the State of California's Administrative Regulations for the Division of the State Architect-Structural Safety (DSA/SS), Chapter 4, Part 1, Title 24, CCR, and the most current version on the date the bids are opened and as it pertains to school construction including, without limitation:

(1) Test and testing laboratory per Section 4-335. District shall pay for the testing laboratory.

(2) Special inspections per Section 4-333(c).

(3) Deferred Approvals per section 4-317(g).

(4) Verified reports per Sections 4-336 & 4-343(c).

(5) Duties of the Architect & Engineers shall be per Sections 4-333(a) and 4-341.

(6) Duties of the Contractor shall be per Section 4-343.

(7) Duties of Project Inspector shall be per Section 4-334.

(8) Addenda and Construction Change Documents per Section 4-338.

Contractor shall keep and make available all applicable parts of the most current version of Title 24 referred to in the plans and specifications at the Site during construction.

C. Items of deferred approval shall be clearly marked on the first sheet of the Architect's and/or Engineer's approved Drawings. All items later submitted for approval shall be per Title 24 requirements to the DSA.

(1) Contractor shall submit the following to Architect for review and endorsement:

(a) Product information on proposed material/system supplier.

(b) Drawings, specifications, and calculations prepared, signed, and stamped by an architect or engineer licensed in the State of California for that portion of the Work.

(c) All other requirements as may be required by DSA.

(2) Cost of preparing and submitting documentation per DSA Deferred Approval requirements including required modifications to Drawings and Specifications, whether or not indicated in the Contract Documents, shall be borne by Contractor.

(3) Contractor shall not begin fabrication and installation of deferred approval items without first obtaining DSA approval of Drawings and Specifications.

(4) Schedule of Work Subject to DSA Deferred Approval: Window wall systems exceeding 10 feet in span.

PART 2 – PRODUCTS Not Used.

PART 3 – EXECUTION Not Used.

END OF DOCUMENT

DOCUMENT 01 42 13

ABBREVIATIONS AND ACRONYMS

PART 1 – GENERAL

1.01 RELATED DOCUMENTS AND PROVISIONS:

All Contract Documents should be reviewed for applicable provisions related to the provisions in this document, including without limitation:

A. General Conditions including without limitation, Definitions;

B. Special Conditions.

1.02 DOCUMENT INCLUDES:

A. Abbreviations used throughout the Contract Documents.

B. Reference to a technical society, organization, or body is by abbreviation, as follows:

1.	AA	The Aluminum Association
2.	AABC	Associated Air Balance Council
3.	AASHTO	American Association of State Highway and Transportation Officials
4.	ACI	American Concrete Institute
5.	AGA	American Gas Association
6.	AGC	Associated General Contractors of America
7.	AHC	Architectural Hardware Consultant
8.	AHRI	Air Conditioning, Heating, Refrigeration Institute
9.	AI	Asphalt Institute
10.	AIA	American Institute of Architects
11.	AISC	American Institute of Steel Construction
12.	AISI	American Iron and Steel Institute
13.	AMCA	Air Movement and Control Association
14.	ANSI	American National Standards Institute
15.	APA	APA – The Engineered Wood Association
16.	ASA	Acoustical Society of America
17.	ASCE	American Society of Civil Engineers
18.	ASHRAE	American Society of Heating, Refrigeration and Air Conditioning Engineers
19.	ASME	American Society of Mechanical Engineers
20.	ASTM	American Society of Testing and Materials International
21.	AWPA	American Wood Protection Association
22.	AWS	American Welding Society
23.	AWSC	American Welding Society Codes & Standards
24.	AWI	Architectural Woodwork Institute
25.	AWWA	American Water Works Association
26.	BIA	The Brick Industry Association
27.	BHMA	Builders Hardware Manufacturers Association
28.	CCR	California Code of Regulations

29.	CLFMI	Chain Link Fence Manufacturers Institute
30.	CRA	California Redwood Association
31.	CRSI	Concrete Reinforcing Steel Institute
32.	CS	Commercial Standards
33.	CSI	Construction Specifications Institute
34.	CTI	Cooling Technology Institute
35.	EMMA	Expanded Metal Lath Manufacturers Association
36.	FGIA	Fenestration and Glazing Industry Alliance
37.	FGMA	Flat Glass Manufacturers' Association
38.	FIA	Factory Insurance Association
39.	FM	Factory Mutual Global
40.	FS/FED SPEC	Federal Specification
41.	FTI	Facing Title Institute
42.	GA	Gypsum Association
43.	IAPMO	International Association of Plumbing and Mechanical Officials
44.	ICC	International Code Council
45.	IEEE	Institute of Electrical and Electronics Engineers
46.	IES	Illuminating Engineering Society
47.	MCAC	Mason Contractors Association of California
48.	MIMA	Mineral Wool Insulation Manufacturers Association
49.	MS/MIL SPEC	Military Specifications
50.	NAAMM	National Association of Architectural Metal Manufacturers
51.	NCMA	National Concrete Masonry Association
52.	NCSEA	National Council of Structural Engineers Associations
53.	NEC	National Electrical Code
54.	NEMA	National Electrical Manufacturers Association
55.	NIST	National Institute of Standards and Technology
56.	NSI	Natural Stone Institute
57.	NTMA	National Terrazzo and Mosaic Association, Inc.
58.	ORS	Office of Regulatory Services (California)
59.	OSHA	Occupational Safety and Health Act
60.	PCI	Precast/Prestressed Concrete Institute
61.	PCA	Portland Cement Association
62.	PCA	Painting Contractors Association
63.	PDI	Plumbing & Drainage Institute
64.	PEI	Porcelain Enamel Institute, Inc.
65.	PG&E	Pacific Gas & Electric Company
66.	PS	Product Standards
67.	SDI	Steel Door Institute; Steel Deck Institute
68.	SJI	Steel Joist Institute
69.	SSPC	Society for Protective Coatings
70.	TCNA	Tile Council of North America, Inc.
71.	TPI	Truss Plate Institute
72.	UBC	Uniform Building Code
73.	UL	Underwriters Laboratories Code
74.	UMC	Uniform Mechanical Code
75.	USDA	United States Department of Agriculture
76.	VI	Vermiculite Institute
77.	WCLIB	West Coast Lumber Inspection Bureau
78.	WDMA	Window and Door Manufacturers Association

79.	WEUSER	Western Electric Utilities Service Engineering Requirements
80.	WIC	Woodwork Institute of California

PART 2 - PRODUCTS Not Used.

PART 3 - EXECUTION Not Used.

END OF DOCUMENT

DOCUMENT 01 42 16

DEFINITIONS

PART 1 - GENERAL

1.01 RELATED DOCUMENTS AND PROVISIONS

All Contract Documents should be reviewed for applicable provisions related to the provisions in this document, including without limitation:

A. General Conditions including without limitation, Definitions;

B. Special Conditions.

1.02 QUALITY ASSURANCE

A. For products or workmanship specified by association, trade, or Federal Standards, Contractor shall comply with requirements of the standard, except when more rigid requirements are specified in the Contract Documents, or are required by applicable codes.

B. Contractor shall conform to current reference standard publication date in effect on the date of bid opening.

C. Contractor shall obtain copies of standards unless specifically required not to by the Contract Documents.

D. Contractor shall maintain a copy of all standards at jobsite during submittals, planning, and progress of the specific Work, until final completion, unless specifically required not to by the Contract Documents.

E. Should specified reference standards conflict with Contract Documents, Contractor shall request clarification from the District and/or the Architect before proceeding.

F. The contractual relationship of the parties to the Contract shall not be altered from the contractual relationship as indicated in the Contract Documents by mention or inference otherwise in any referenced document.

G. Governing Codes shall be as shown in the Contract Documents including, without limitation, the Specifications.

END OF DOCUMENT

DOCUMENT 01 43 00

MATERIALS AND EQUIPMENT

PART 1 - GENERAL

1.01 RELATED DOCUMENTS AND PROVISIONS

All Contract Documents should be reviewed for applicable provisions related to the provisions in this document, including without limitation:

A. General Conditions, including, without limitation, Purchase of Materials and Equipment;

B. Special Conditions;

C. Imported Materials Certification.

1.02 MATERIAL AND EQUIPMENT

A. Only items approved by the District and/or Design Professional shall be used.

B. Contractor shall submit lists of products and other product information in accordance with the Contract Documents, including, without limitation, the provisions regarding the submittals.

1.03 MATERIAL AND EQUIPMENT COLORS

A. The District and/or Architect will provide a schedule of colors.

B. No individual color selections will be made until after approval of all pertinent materials and equipment and after receipt of appropriate samples in accordance with the Contract Documents, including, without limitation, the provisions regarding the submittals.

C. Contractor shall request priority in writing for any item requiring advance ordering to maintain the approved Construction Schedule.

1.04 DELIVERY, STORAGE, AND HANDLING

A. Contractor shall deliver manufactured materials in original packages, containers, or bundles (with seals unbroken), bearing name or identification mark of manufacturer.

B. Contractor shall deliver fabrications in as large assemblies as practicable; where specified as shop-primed or shop-finished, package or crate as required to preserve such priming or finish intact and free from abrasion.

C. Contractor shall store materials in such a manner as necessary to properly protect them from damage. Materials or equipment damaged by handling, weather, dirt, or from any other cause will not be accepted.

D. Materials are not acceptable that have been warehoused for long periods of time, stored or transported in improper environment, improperly packaged, inadequately labeled, poorly protected, excessively shipped, deviated from normal distribution pattern, or reassembled.

E. Contractor shall store material so as to cause no obstructions of sidewalks, roadways, access to the Site or buildings, and underground services. Contractor shall protect material and equipment furnished under Contract.

F. Contractor may store materials on Site with prior written approval by the District, all material shall remain under Contractor's control and Contractor shall remain liable for any damage to the materials. Should the Project Site not have storage area available, the Contractor shall provide for off-site storage at a bonded warehouse and with appropriate insurance coverage at no cost to District.

G. When any room in Project is used as a shop or storeroom, the Contractor shall be responsible for any repairs, patching, or cleaning necessary due to that use. Location of storage space shall be subject to prior written approval by District.

PART 2 - PRODUCTS

2.01 MANUFACTURERS

A. Manufacturers listed in various sections of Contract Documents are names of those manufacturers that are believed to be capable of supplying one or more of items specified therein.

B. The listing of a manufacturer does not imply that every product of that manufacturer is acceptable as meeting the requirements of the Contract Documents.

2.02 FACILITIES AND EQUIPMENT

Contractor shall provide, install, maintain, and operate a complete and adequate facility for handling, the execution, disposal, and distribution of material and equipment as required for proper and timely performance of Work connected with Contract.

2.03 MATERIAL REFERENCE STANDARDS

Where material is specified solely by reference to “standard specifications” and if requested by District, Contractor shall submit for review data on actual material proposed to be incorporated into Work of Contract listing name and address of vendor, manufacturer, or producer, and trade or brand names of those materials, and data substantiating compliance with standard specifications.

PART 3 - EXECUTION

3.01 WORKMANSHIP

A. Where not more specifically described in any other Contract Documents, workmanship shall conform to methods and operations of best standards and accepted practices of trade or trades involved and shall include items of fabrication, construction, or installation regularly furnished or required for completion (including finish and for successful operation, as intended).

B. Work shall be executed by tradespersons skilled in their respective lines of Work. When completed, parts shall have been durably and substantially built and present a neat appearance.

3.02 COORDINATION

A. Contractor shall coordinate installation of Work so as to not interfere with installation of others. Adjustment or rework because of Contractor's failure to coordinate will be at no additional cost to District.

B. Contractor shall examine in-place work for readiness, completeness, fitness to be concealed or to receive other work, and in compliance with Contract Documents. Concealing or covering Work constitutes acceptance of additional cost which will result should in-place Work be found unsuitable for receiving other Work or otherwise deviating from the requirements of the Contract Documents.

3.03 COMPLETENESS

Contractor shall provide all portions of the Work, unless clearly stated otherwise, installed complete and operational with all elements, accessories, anchorages, utility connections, etc., in manner to assure well-balanced performance, in accordance with manufacturer's recommendations and by Contract Documents. For example, electric water coolers require water, electricity, and drain services; roof drains require drain system; sinks fit within countertop, etc. Terms such as "installed complete," "operable condition," "for use intended," "connected to all utilities," "terminate with proper cap," "adequately anchored," "patch and refinish," "to match similar," should be assumed to apply in all cases, except where completeness of functional or operable condition is specifically stated as not required.

3.04 APPROVED INSTALLER OR APPLICATOR

Installation by a manufacturer's approved installer or applicator is an understood part of Specifications and only approved installer or applicator is to provide on-site Work where specified manufacturer has on-going program of approving (i.e. certifying, bonding, re-warranting) installers or applicators. Newly established relationships between a manufacturer and an installer or applicator who does not have other approved applicator work in progress or completed is not approved for this Project.

3.05 MANUFACTURER'S RECOMMENDATIONS

All installations shall be in accordance with manufacturer's published recommendations and specific written directions of manufacturer's representative. Should Contract Documents differ from recommendations of manufacturer or directions of his representative, Contractor shall analyze differences, make recommendations to the District and the Architect in writing, and shall not proceed until interpretation or clarification has been issued by the District and/or the Architect.

END OF DOCUMENT

DOCUMENT 01 45 00

QUALITY CONTROL

PART 1 - GENERAL

1.01 RELATED DOCUMENTS AND PROVISIONS:

All Contract Documents should be reviewed for applicable provisions related to the provisions in this document, including without limitation:

A. General Conditions, including, without limitation, Inspector, Inspections and Tests, Uncovering of Work and Non-conforming of Work and Correction of Work;

B. Special Conditions.

1.02 RELATED CODES:

A. The Work is governed by requirements of Title 24, California Code of Regulations ("CCR"), and the Contractor shall keep a copy of these available at the job Site for ready reference during construction.

B. The Division of the State Architect ("DSA") shall be notified at or before the start of construction.

1.03 OBSERVATION AND SUPERVISION:

A. The District and Architect or their appointed representatives will review the Work and the Contractor shall provide facilities and access to the Work at all times as required to facilitate this review. Administration by the Architect and any consulting Structural Engineer will be in accordance with applicable regulations, including, without limitation, CCR, Part 1, Title 24, Section 4-341.

B. One or more Project Inspector(s) approved by DSA and employed by or in contract with the District, referred to hereinafter as the "Project Inspector", will observe the work in accordance with CCR, Part 1, Title 24, Sections 4-333(b) and 4-342:

(1) The Project Inspector and Special Inspector(s) shall have access to the Work wherever it is in preparation or progress for ascertaining that the Work is in accordance with the Contract Documents and all applicable code sections. The Contractor shall provide facilities and operation of equipment as needed, and access as required and shall provide assistance for sampling or measuring materials.

(2) The Project Inspector will notify the District and Architect and call the attention of the Contractor to any observed failure of Work or material to conform to Contract Documents.

(3) The Project Inspector shall observe and monitor all testing and inspection activities required.

The Contractor shall conform with all applicable laws as indicated in the Contract Documents, including, without limitation, to CCR, Part 1, Title 24, Section 4-343. The Contractor shall supervise and direct the Work and maintain a competent superintendent on the job who is authorized to act in all matters pertaining to the Work. The Contractor's superintendent shall also inspect all materials, as they arrive, for compliance with the Contract Documents. Contractor shall reject defective Work or materials immediately upon delivery or failure of the Work or material to comply with the Contract Documents. The Contractor shall submit verified reports as indicated in the Contract Documents, including, without limitation, the Specifications and as required by Part 1, Title 24, Section 4-336.

1.04 TESTING AGENCIES:

A. Testing agencies and tests shall be in conformance with the General Documents and the requirements of Part 1, Title 24, Section 4- 335.

B. Testing and inspection in connection with earthwork shall be under the direction of the District's consulting soils engineer, if any, referred to hereinafter as the "Soils Engineer."

C. Testing and inspection of construction materials and workmanship shall be performed by a qualified laboratory, referred to hereinafter as the "Testing Laboratory." The Testing Laboratory shall be under direction of an engineer registered in the State of California, shall conform to requirements of ASTM E329, and shall be employed by or in contract with the District.

1.05 TESTS AND INSPECTIONS:

A. The Contractor shall be responsible for notifying the District and Project Inspector of all required tests and inspections. Contractor shall notify the District and Project Inspector at least seventy-two hours (72) hours in advance of performing any Work requiring testing or inspection.

B. The Contractor shall provide access to Work to be tested and furnish incidental labor, equipment, and facilities to facilitate all inspections and tests.

C. The District will pay for first inspections and tests required by the “CCR”, and other inspections or tests that the District and/or the Architect may direct to have made, including the following principal items:

(1) Tests and observations for earthwork and paving.

(2) Tests for concrete mix designs, including tests of trial batches.

(3) Tests and inspections for structural steel work.

(4) Field tests for framing lumber moisture content.

(5) Additional tests directed by the District that establish that materials and installation comply with the Contract Documents.

(6) Tests and observations of welding and expansion anchors.

D. The District may at its discretion, pay and then back charge the Contractor for:

(1) Retests or reinspections, if required, and tests or inspections required due to Contractor error or lack of required identifications of material.

(2) Uncovering of work in accordance with Contract Documents.

(3) Testing done on weekends, holidays, and overtime will be chargeable to the Contractor for the overtime portion.

(4) Testing done off Site.

E. Testing and inspection reports and certifications:

(1) If initially received by Contractor, Contractor shall provide to each of the following a copy of the agency or laboratory report of each test or inspection or certification.

(a) The District;

(b) The Construction Manager, if any;

(c) The Architect;

(d) The Consulting Engineer, if any;

(e) Other engineers on the Project, as appropriate;

(f) The Project Inspector; and

(g) The Contractor.

(2) When the test or inspection is one required by the CCR, a copy of the report shall also be provided to the DSA.

PART 2 - PRODUCTS

2.01 TYPE OF TESTS AND INSPECTIONS

A. Testing and inspection shall be in accordance with DSA Form 103 (or current version).

B. Specific types of tests to be provided by District/Architect/Construction Manager.

PART 3 - EXECUTION Not Used.

PART 4

END OF DOCUMENT

DOCUMENT 01 50 00

TEMPORARY FACILITIES AND CONTROLS

PART 1 – GENERAL

1.01 RELATED DOCUMENTS AND PROVISIONS:

All Contract Documents should be reviewed for applicable provisions related to the provisions in this document, including without limitation:

A. General Conditions;

B. Special Conditions;

C. Site Standards; and

D. Construction Waste Management and Disposal.

1.02 TEMPORARY UTILITIES:

A. Electric Power and Lighting:

(1) To the extent power is available in the building(s) or on the Site, Contractor may use the District's existing utilities. Contractor shall be responsible for providing temporary facilities required to deliver that power service from its existing location in the building(s) or on the Site to point of intended use.

(2) Contractor shall verify characteristics of power available in building(s) or on the Site. Contractor shall take all actions required to make modifications where power of higher voltage or different phases of current are required. Contractor shall be fully responsible for providing that service and shall pay all costs required therefor.

(3) Contractor shall furnish, wire for, install, and maintain temporary electrical lights wherever it is necessary to provide illumination for the proper performance and/or observation of the Work: a minimum of 20 foot-candles for rough work and 50 foot-candles for finish work.

(4) Contractor shall be responsible for maintaining existing lighting levels in the project vicinity should temporary outages or service interruptions occur.

B. Heat and Ventilation:

(1) Contractor shall provide temporary heat to maintain environmental conditions to facilitate progress of the Work, to meet specified minimum conditions for the installation and curing of materials, and to protect materials and finishes from damage due to improper

temperature and humidity conditions. Portable heaters shall be standard units complete with controls.

(2) Contractor shall provide forced ventilation and dehumidification, as required, of enclosed areas for proper installation and curing of materials, to disperse humidity, and to prevent hazardous accumulations of dust, fumes, vapors, and gases.

(3) Contractor shall pay the costs of installation, maintenance, operation, and removal of temporary heat and ventilation, including costs for fuel consumed, required for the performance of the Work.

C. Water:

(1) Contractor shall coordinate and pay for installation or use of water meter in compliance with local water agency requirements if required as part of the Work. To the extent water is then available in the building(s) or on the Site, Contractor may use the District's existing utilities. Contractor shall be responsible for providing temporary facilities required to deliver such utility service from its existing location in the building(s), on the Site, or other location approved by the local water agency, to point of intended use.

(2) Contractor shall use backflow preventers on water lines at point of connection to District's water supply. Backflow preventers shall comply with requirements of Uniform Plumbing Code.

(3) Contractor shall make potable water available for human consumption.

D. Sanitary Facilities:

(1) Contractor shall provide sanitary temporary facilities in no fewer numbers than required by law and such additional facilities as may be directed by the Inspector for the use of all workers. The facilities shall be maintained in a sanitary condition at all times and shall be left at the Site until removal is directed by the Inspector or Contractor completes all other work at the Site.

(2) Use of toilet facilities in the Work under construction shall not be permitted except by consent of the Inspector and the District.

E. Telephone Service:

(1) Contractor shall arrange with local telephone service company for telephone service as required for the performance of the Work. Contractor shall, at a minimum, provide in its field office one line for telephone and one line for fax machine.

(2) Contractor shall pay the costs for telephone and fax lines installation, maintenance, service, and removal.

F. Fire Protection:

(1) Contractor shall provide and maintain fire extinguishers and other equipment for fire protection. Such equipment shall be designated for use for fire protection only and shall comply with all requirements of the California Fire, State Fire Marshall and/or its designee.

(2) Where on-site welding and burning of steel is unavoidable, Contractor shall provide protection for adjacent surfaces.

G. Trash Removal:

(1) Contractor shall provide trash removal on a timely basis**.** Under no circumstance shall Contractor use District trash service.

H. Field Office:

(1) If Contractor chooses to provide a field office, it shall be an acceptable construction trailer that is well-lit and ventilated. The construction trailer shall be equipped with shelves, desks, filing cabinet, chairs, and such other items of equipment needed. Trailer and equipment are the property of the Contractor and must be removed from the Site upon completion of the Work.

(2) Contractor shall provide any additional electric lighting and power required for the trailer. Contractor shall make adequate provisions for heating and cooling as required.

I. Temporary Facilities:

(1) To be provided by District (if applicable).

1.03 CONSTRUCTION AIDS:

A. Plant and Equipment:

(1) Contractor shall furnish, operate, and maintain a complete plant for fabricating, handling, conveying, installing, and erecting materials and equipment; and for conveyances for transporting workers. Include elevators, hoists, debris chutes, and other equipment, tools, and appliances necessary for performance of the Work.

(2) Contractor shall maintain plant and equipment in safe and efficient operating condition. Damages due to defective plant and equipment, and uses made thereof, shall be repaired by Contractor at no expense to the District.

B. None of the District's tools and equipment shall be used by Contractor for the performance of the Work.

1.04 BARRIERS AND ENCLOSURES:

A. Contractor shall obtain the District's written permission for locations and types of temporary barriers and enclosures, including fire-rated materials proposed for use, prior to their installation.

B. Contractor shall provide and maintain temporary enclosures to prevent public entry and to protect persons using other buildings and portions of the Site and/or Premises, the public, and workers. Contractor shall also protect the Work and existing facilities from the elements, and adjacent construction and improvements, persons, and trees and plants from damage and injury from demolition and construction operations.

C. Contractor shall provide site access to existing facilities for persons using other buildings and portions of the Site, the public, and for deliveries and other services and activities.

D. Tree and Plant Protection:

(1) Contractor shall preserve and protect existing trees and plants on the Premises that are not designated or required to be removed, and those adjacent to the Premises.

(2) Contractor shall provide barriers to a minimum height of 4'-0" around drip line of each tree and plant, around each group of trees and plants, as applicable, in the proximity of demolition and construction operations, or as denoted on the Plans.

(3) Contractor shall not park trucks, store materials, perform Work or cross over landscaped areas. Contractor shall not dispose of paint thinners, water from cleaning, plastering or concrete operations, or other deleterious materials in landscaped areas, storm drain systems, or sewers. Plant materials damaged as a result of the performance of the Work shall, at the option of the District and at Contractor's expense, either be replaced with new plant materials equal in size to those damaged or by payment of an amount representing the value of the damaged materials as determined by the District.

(4) Contractor shall remove soil that has been contaminated during the performance of the Work by oil, solvents, and other materials which could be harmful to trees and plants, and replace with good soil, at Contractor's expense.

(5) Excavation around Trees:

(a) Excavation within drip lines of trees shall be done only where absolutely necessary and with written permission from the District.

(b) Where trenching for utilities is required within drip lines, tunneling under and around roots shall be by hand digging and shall be approved by the District. Main lateral roots and

taproots shall not be cut. All roots 2 inches in diameter and larger shall be tunneled under and heavily wrapped with wet burlap so as to prevent scarring or excessive drying. Smaller roots that interfere with installation of new work may be cut with prior approval by the District. Roots must first be cut with a Vermeer, or equivalent, root cutter prior to any trenching.

(c) Where excavation for new construction is required within drip line of trees, hand excavation shall be employed to minimize damage to root system. Roots shall be relocated in backfill areas wherever possible. If encountered immediately adjacent to location of new construction, roots shall be cut approximately 6 inches back from new construction.

(d) Approved excavations shall be carefully backfilled with the excavated materials approved for backfilling. Backfill shall conform to adjacent grades without dips, sunken areas, humps, or other surface irregularities. Do not use mechanical equipment to compact backfill. Tamp carefully using hand tools, refilling and tamping until Final Acceptance as necessary to offset settlement.

(e) Exposed roots shall not be allowed to dry out before permanent backfill is placed. Temporary earth cover shall be provided, or roots shall be wrapped with four layers of wet, untreated burlap and temporarily supported and protected from damage until permanently relocated and covered with backfill.

(a) Accidentally broken roots should be sawed cleanly 3 inches behind ragged end.

1.05 SECURITY:

The Contractor shall be responsible for project security for materials, tools, equipment, supplies, and completed and partially completed Work.

1.06 TEMPORARY CONTROLS:

A. Noise Control:

(1) Contractor acknowledges that adjacent facilities may remain in operation during all or a portion of the Work period, and it shall take all reasonable precautions to minimize noise as required by applicable laws and the Contract Documents.

(2) Notice of proposed noisy operations, including without limitation, operation of pneumatic demolition tools, concrete saws, and other equipment, shall be submitted to the District a minimum of forty-eight (48) hours in advance of their performance.

B. Noise and Vibration:

(1) Equipment and impact tools shall have intake and exhaust mufflers.

(2) Contractor shall cooperate with District to minimize and/or cease the use of noisy and vibratory equipment if that equipment becomes objectionable by its longevity.

C. Dust and Dirt:

(1) Contractor shall conduct demolition and construction operations to minimize the generation of dust and dirt, and prevent dust and dirt from interfering with the progress of the Work and from accumulating in the Work and adjacent areas including, without limitation, occupied facilities.

(2) Contractor shall periodically water exterior demolition and construction areas to minimize the generation of dust and dirt.

(3) Contractor shall ensure that all hauling equipment and trucks carrying loads of soil and debris shall have their loads sprayed with water or covered with tarpaulins, and as otherwise required by local and state ordinance.

(4) Contractor shall prevent dust and dirt from accumulating on walks, roadways, parking areas, and planting, and from washing into sewer and storm drain lines.

D. Water:

(1) Contractor shall not permit surface and subsurface water, and other liquids, to accumulate in or about the vicinity of the Premises. Should accumulation develop, Contractor shall control the water or other liquid, and suitably dispose of it by means of temporary pumps, piping, drainage lines, troughs, ditches, dams, or other methods.

E. Pollution:

(1) No burning of refuse, debris, or other materials shall be permitted on or in the vicinity of the Premises.

(2) Contractor shall comply with applicable regulatory requirements and anti-pollution ordinances during the conduct of the Work including, without limitation, demolition, construction, and disposal operations.

F. Lighting:

(1) If portable lights are used after dark, all light must be located so as not to direct light into neighboring property.

1.07 JOB SIGN(S):

A. General:

(1) Contractor shall provide and maintain a Project identification sign with the design, text, and colors designated by the District and/or the Design Professional; locate sign as approved by the District.

(2) Signs other than the specified Project sign and or signs required by law, for safety, or for egress, shall not be permitted, unless otherwise approved in advance by the District.

B. Materials:

(1) Structure and Framing: Structurally sound, new or used wood or metal; wood shall be nominal 3/4-inch exterior grade plywood.

(2) Sign Surface: Minimum 3/4-inch exterior grade plywood.

(3) Rough Hardware: Galvanized.

(4) Paint: Exterior quality, of type and colors selected by the District and/or the Design Professional.

C. Fabrication:

(1) Contractor shall fabricate to provide smooth, even surface for painting.

(2) Size: 4'-0" x 8'-0", unless otherwise indicated.

(3) Contractor shall paint exposed surfaces of supports, framing, and surface material with exterior grade paint: one coat of primer and one coat of finish paint.

(4) Text and Graphics: As indicated.

1.08 PUBLICITY RELEASES:

A. Contractor shall not release any information, story, photograph, plan, or drawing relating information about the Project to anyone, including press and other public communications medium, including, without limitation, on website(s) without the written permission of the District.

PART 2 – PRODUCTS Not used.

PART 3 – EXECUTION Not used.

END OF DOCUMENT

DOCUMENT 01 50 13

CONSTRUCTION WASTE MANAGEMENT AND DISPOSAL

PART 1 - GENERAL

1.01 RELATED DOCUMENTS AND PROVISIONS:

All Contract Documents should be reviewed for applicable provisions related to the provisions in this document, including without limitation:

A. General Conditions;

B. Special Conditions; and

C. Temporary Facilities and Controls.

1.02 SECTION INCLUDES:

A. Administrative and procedural requirements for the following:

(1) Salvaging non-hazardous construction waste.

(2) Recycling non-hazardous construction waste.

(3) Disposing of non-hazardous construction waste.

1.03 DEFINITIONS:

A. Construction Waste: Building and site improvement materials and other solid waste resulting from construction, remodeling, renovation, or repair operations. Construction waste includes packaging.

B. Demolition Waste: Building and site improvement materials resulting from demolition or selective demolition operations.

C. Disposal: Removal off-site of demolition and construction waste and subsequent sale, recycling, reuse, or deposit in landfill or incinerator acceptable to authorities having jurisdiction.

D. Recycle: Recovery of demolition or construction waste for subsequent processing in preparation for reuse.

E. Salvage: Recovery of demolition or construction waste and subsequent sale or reuse in another facility.

F. Salvage and Reuse: Recovery of demolition or construction waste and subsequent incorporation into the Work.

1.04 QUALITY ASSURANCE:

A. Regulatory Requirements: Comply with hauling and disposal regulations of authorities having jurisdiction.

PART 2 - PRODUCTS Not Used.

PART 3 - EXECUTION

3.01 PLAN IMPLEMENTATION:

A. General: Provide handling, containers, storage, signage, transportation, and other items as required for waste management during the entire duration of the Contract.

(1) Comply with Document 01 50 00 for operation, termination, and removal requirements.

B. Training: Train workers, subcontractors, and suppliers on proper waste management procedures, as appropriate for the Work occurring at Project site.

C. Site Access and Temporary Controls: Conduct waste management operations to ensure minimum interference with roads, streets, walks, walkways, and other adjacent occupied and used facilities.

(1) Comply with Document 01 50 00 for controlling dust and dirt, environmental protection, and noise control.

3.02 RECYCLING CONSTRUCTION WASTE:

A. General: Recycle paper and beverage containers used by on-site workers.

B. Recycling Incentives: Revenues, savings, rebates, tax credits, and other incentives received for recycling waste materials shall accrue to the Contractor.

C. Procedures: Separate recyclable waste from other waste materials, trash, and debris. Separate recyclable waste by type at Project site to the maximum extent practical.

(1) Provide appropriately marked containers or bins for controlling recyclable waste until they are removed from Project Site. Include list of acceptable and unacceptable materials at each container and bin.

(a) Inspect containers and bins for contamination and remove contaminated materials if found.

(2) Stockpile processed materials on site without intermixing with other materials. Place, grade, and shape stockpiles to drain surface water. Cover to prevent windblown dust.

(3) Stockpile materials away from construction area. Do not store within drip line of remaining trees.

(4) Store components off the ground and protect from the weather.

(5) Remove recyclable waste off District property and transport to recycling receiver or processor.

D. Packaging:

(1) Cardboard and Boxes: Break down packaging into flat sheets. Bundle and store in a dry location.

(2) Polystyrene Packaging: Separate and bag material.

(3) Pallets: As much as possible, require deliveries using pallets to remove pallets from Project Site. For pallets that remain on Site, break down pallets into component wood pieces and comply with requirements for recycling wood.

(4) Crates: Break down crates into component wood pieces and comply with requirements for recycling wood.

E. Site-Clearing Wastes: Chip brush, branches, and trees on site.

F. Wood Materials:

(1) Clean Cut-Offs of Lumber: Grind or chip into small pieces.

(2) Clean Sawdust: Bag sawdust that does not contain painted or treated wood.

G. Gypsum Board: Stack large clean pieces on wood pallets and store in a dry location.

(1) Clean Gypsum Board: Grind scraps of clean gypsum board using small mobile chipper or hammer mill. Screen out paper after grinding.

3.03 DISPOSAL OF WASTE:

A. General: Except for items or materials to be salvaged, recycled, or otherwise reused, remove waste materials from Project Site and legally dispose of them in a landfill or incinerator acceptable to authorities having jurisdiction.

(1) Except as otherwise specified, do not allow waste materials that are to be disposed of accumulate on site.

(2) Remove and transport debris in a manner that will prevent spillage on adjacent surfaces and areas.

B. Burning: Do not burn waste materials.

C. Disposal: Transport waste materials off District property and legally dispose of them.

END OF DOCUMENT

DOCUMENT 01 64 00

OWNER-FURNISHED PRODUCTS

PART 1 – GENERAL

1.01 RELATED DOCUMENTS AND PROVISIONS

All Contract Documents should be reviewed for applicable provisions related to the provisions in this document, including without limitation:

A. General Conditions;

B. Special Conditions; and

C. Materials and Equipment.

1.02 SECTION INCLUDES

A. Requirements for the following:

(1) Installing Owner-furnished materials and equipment.

(2) Providing necessary utilities, connections and rough-ins.

1.03 DEFINITIONS

A. Owner: District, who is providing/furnishing materials and equipment.

B. Installing Contactor: Contractor, who is installing the materials and equipment furnished by the Owner.

1.04 PRODUCT DELIVERY, STORAGE, AND HANDLING

A. Receive, store and handle products in accordance with the manufacturer's instructions.

B. Protect equipment items as required to prevent damage during storage and construction.

PART 2 – PRODUCTS

2.01 GENERAL PRODUCT REQUIREMENTS

A. Installing Contractor's Responsibilities:

(1) Verify mounting and utility requirements for Owner-furnished materials and equipment items.

(2) Provide mounting and utility rough in for all items where required.

(a) Rough in locations, sizes, capacities, and similar type items shall be as indicated and required by product manufacturer.

B. Owner and Installing Contractor(s) Responsibilities:

(1) Owner-Furnished/Contractor Installed ("OFCI"): Furnished by the Owner; installed by the Installing Contractor.

(a) General: Owner and Installing Contractor(s) will coordinate deliveries of materials and equipment to coincide with the construction schedule.

(b) Owner will furnish specified materials and equipment delivered to the site. Owner/vendor's representative shall be present on Site at the time of delivery to comply with the contract requirements.

(c) The Owner furnishing specified materials and equipment is responsible to provide manufacturer guarantees as required by the Contract to the Installing Contractor.

(d) The Installing Contractor shall:

1) Review, verify and accept the approved manufacturer's submittal/Shop Drawings for all materials and equipment required to be installed by the Installer Contractor and furnished by the Owner. Any discrepancies, including but not limited to possible space conflicts, should be brought to the attention of the Project Manager and/or Program Manager, if applicable.

2) Coordinate timely delivery. Installing Contractor shall receive materials and equipment at Site when delivered and give written receipt at time of delivery, noting visible defects or omissions; if such declaration is not given, the Installing Contractor shall assume responsibility for such defects and omissions.

3) Store materials and equipment until ready for installation and protect from loss and damage. Installing Contractor is responsible for providing adequate storage space.

4) Coordinate with other bid package contractors and field measurement to ensure complete installation.

5) Uncrate, assemble, and set in place.

6) Provide adequate supports.

7) Install materials and equipment in accordance with manufacturer's recommendations, instructions, and Shop Drawings, supply labor and material required, and

make mechanical, plumbing, and electrical connections required to operate equipment.

8) Be certified by equipment manufacturer for installation of the specific equipment supplied by the Owner.

9) Provide anchorage and/or bracing as required for seismic restraint per Title 24, UBC Standard 27-11 and all other applicable codes.

10) Provide the contract-required warranty and guarantee for all work, materials and equipment, and installation upon its completion and acceptance by the District. Guarantee includes all costs associated with the removal, shipping to and from the Site, and re-installation of any equipment found to be defective.

C. Compatibility with Space and Service Requirements:

(1) Equipment items shall be compatible with space limitations indicated and as shown on the Contract Documents and specified in other sections of the Specifications.

(2) Modifications to equipment items required to conform to space limitations specified for rough in shall not cause additional cost to the District.

D. Manufacturer's printed descriptions, specifications, and instructions shall govern the Work unless specifically indicated or specified otherwise.

2.02 FURNISHED MATERIALS AND EQUIPMENT

A. All furnished materials and equipment are indicated or scheduled on the Contract Documents.

PART 3 – EXECUTION

3.01 INSTALLATION

A. Install equipment items in accordance with the manufacturer's instructions.

B. Set equipment items securely in place, rigidly or flexibly mounted in accordance with manufacturers' directions.

C. Make electrical and mechanical connections as indicated and required.

D. Touch-up and restore damaged or defaced finishes to the Owner's satisfaction.

3.02 CLEANING AND PROTECTION

A. Repair or replace items not acceptable to the Architect or Owner.

B. Upon completion of installation, clean equipment items in accordance with manufacturer's recommendations, and protect from damage until final acceptance of the Work by the Owner.

END OF DOCUMENT

SECTION 01 66 00

PRODUCT DELIVERY, STORAGE AND HANDLING

PART 1 - GENERAL

1.01 RELATED DOCUMENTS AND PROVISIONS

All Contract Documents should be reviewed for applicable provisions related to the provisions in this document, including without limitation:

A. General Conditions, including, without limitation, Site Access, Conditions and Requirements;

B. Special Conditions.

1.02 PRODUCTS

A. Products are as defined in the General Conditions.

B. Contractor shall not use and/or reuse materials and/or equipment removed from existing Premises, except as specifically permitted by the Contract Documents.

C. Contractor shall provide interchangeable components of the same manufacturer, for similar components.

1.03 TRANSPORTATION AND HANDLING

A. Contractor shall transport and handle Products in accordance with manufacturer's instructions.

B. Contractor shall promptly inspect shipments to confirm that Products comply with requirements, quantities are correct, and products are undamaged.

C. Contractor shall provide equipment and personnel to handle Products by methods to prevent soiling, disfigurement, or damage.

1.04 STORAGE AND PROTECTION

A. Contractor shall store and protect Products in accordance with manufacturer's instructions, with seals and labels intact and legible. Contractor shall store sensitive products in weather-tight, climate controlled enclosures.

B. For exterior storage of fabricated Products, Contractor shall place on sloped supports, above ground.

C. Contractor shall provide off-site storage and protection when Site does not permit on-site storage or protection.

D. Contractor shall cover products subject to deterioration with impervious sheet covering and provide ventilation to avoid condensation.

E. Contractor shall store loose granular materials on solid flat surfaces in a well-drained area and prevent mixing with foreign matter.

F. Contractor shall provide equipment and personnel to store Products by methods to prevent soiling, disfigurement, or damage.

G. Contractor shall arrange storage of Products to permit access for inspection and periodically inspect to assure Products are undamaged and are maintained under specified conditions.

PART 2 – PRODUCTS Not Used.

PART 3 - EXECUTION Not Used.

END OF DOCUMENT

DOCUMENT 01 76 00

ALTERATION PROJECT PROCEDURES

PART 1 – GENERAL

1.01 RELATED DOCUMENTS AND PROVISIONS:

All Contract Documents should be reviewed for applicable provisions related to the provisions in this document, including without limitation:

A. General Conditions, including, without limitation, Integration of Work, Purchase of Materials and Equipment, Uncovering of Work and Non-conforming Work and Correction of Work and Trenches;

B. Special Conditions.

PART 2 - PRODUCTS

2.01 PRODUCTS FOR PATCHING AND EXTENDING WORK:

A. New Materials: As specified in the Contract Documents including, without limitation, in the Specifications, Contractor shall match existing products, conditions, and work for patching and extending work.

B. Type and Quality of Existing Products: Contractor shall determine by inspection, by testing products where necessary, by referring to existing conditions and to the Work as a standard.

PART 3 - EXECUTION

3.01 EXAMINATION:

A. Contractor shall verify that demolition is complete and that areas are ready for installation of new Work.

B. By beginning restoration Work, Contractor acknowledges and accepts the existing conditions.

3.02 PREPARATION:

A. Contractor shall cut, move, or remove items as necessary for access to alterations and renovation Work. Contractor shall replace and restore these at completion.

B. Contractor shall remove unsuitable material not as salvage unless otherwise indicated in the Contract Documents. Unsuitable material may include, without limitation, rotted wood, corroded metals, and deteriorated masonry and concrete. Contractor shall replace materials as specified for finished Work.

C. Contractor shall remove debris and abandoned items from all areas of the Site and from concealed spaces.

D. Contractor shall prepare surface and remove surface finishes to provide for proper installation of new Work and finishes.

E. Contractor shall close openings in exterior surfaces to protect existing work from weather and extremes of temperature and humidity. Contractor shall insulate ductwork and piping to prevent condensation in exposed areas. Contractor shall insulate building cavities for thermal and/or acoustical protection, as detailed.

3.03 INSTALLATION:

A. Contractor shall coordinate Work of all alternations and renovations to expedite completion and to accommodate District occupancy.

B. Designated Areas and Finishes: Contractor shall complete all installations in all respects, including operational, mechanical work and electrical work.

C. Contractor shall remove, cut, and patch Work in a manner to minimize damage and to provide a means of restoring Products and finishes to original or specified condition.

D. Contractor shall refinish visible existing surfaces to remain in renovated rooms and spaces, to specified condition for each material, with a neat and square or straight transition to adjacent finishes.

E. Contractor shall install products as specified in the Contract Documents, including without limitation, the Specifications.

3.04 TRANSITIONS:

A. Where new Work abuts or aligns with existing, Contractor shall perform a smooth and even transition. Patched Work must match existing adjacent work in texture and appearance.

B. When finished surfaces are cut so that a smooth transition with new Work is not possible, Contractor shall terminate existing surface along a straight line at a natural line of division and make a recommendation for resolution to the District and the Architect for review and approval.

3.05 ADJUSTMENTS:

A. Where removal of partitions or walls results in adjacent spaces becoming one, Contractor shall rework floors, walls, and ceilings to a smooth plane without breaks, steps, or bulkheads.

B. Where a change of plane of 1/4 inch or more occurs, Contractor shall submit a recommendation for providing a smooth transition to the District and the Architect for review and approval.

C. Contractor shall trim and seal existing wood doors and shall trim and paint metal doors as necessary to clear new floor finish and refinish trim as required.

D. Contractor shall fit Work at penetrations of surfaces.

3.06 REPAIR OF DAMAGED SURFACES:

A. Contractor shall patch or replace portions of existing surfaces, which are damaged, lifted, discolored, or showing other imperfections, in the area where the Work is performed.

B. Contractor shall repair substrate prior to patching finish.

3.07 CULTIVATED AREAS AND OTHER SURFACE IMPROVEMENTS:

A. Cultivated or planted areas and other surface improvements which are damaged by actions of the Contractor shall be restored by Contractor to their original condition or better, where indicated.

B. Contractor shall protect and replace, if damaged, all existing guard posts, barricades, and fences.

C. Contractor shall give special attention to avoid damaging or killing trees, bushes and/or shrubs on the Premises and/or identified in the Contract Documents, including without limitation, the Drawings.

3.08 FINISHES:

A. Contractor shall finish surfaces as specified in the Contract Documents, including without limitations, the provisions of all Divisions of the Specifications.

B. Contractor shall finish patches to produce uniform finish and texture over entire area. When finish cannot be matched, Contractor shall refinish entire surface to nearest intersections.

3.09 CLEANING:

A. Contractor shall continually clean the Site and the Premises as indicated in the Contract Documents, including without limitation, the provisions in the General Conditions and the Specifications regarding cleaning.

END OF DOCUMENT

DOCUMENT 01 77 00

CONTRACT CLOSEOUT AND FINAL CLEANING

PART 1 - GENERAL

1.01 RELATED DOCUMENTS AND PROVISIONS

All Contract Documents should be reviewed for applicable provisions related to the provisions in this document, including without limitation:

A. General Conditions, including, without limitation, Completion of Work;

B. Special Conditions;

C. Temporary Facilities and Controls.

1.02 CLOSEOUT PROCEDURES

Contractor shall comply with all closeout provisions as indicated in the General Conditions.

1.03 FINAL CLEANING

A. Contractor shall execute final cleaning prior to final inspection.

B. Contractor shall clean interior and exterior glass and all surfaces exposed to view; remove temporary labels, tape, stains, and foreign substances, polish transparent and glossy surfaces, wax and polish new vinyl floor surfaces, vacuum carpeted and soft surfaces.

C. Contractor shall clean equipment and fixtures to a sanitary condition.

D. Contractor shall replace filters of operating equipment.

E. Contractor shall clean debris from roofs, gutters, down spouts, and drainage systems.

F. Contractor shall clean Site, sweep paved areas, and rake clean landscaped surfaces.

G. Contractor shall remove waste and surplus materials, rubbish, and construction facilities from the Site and surrounding areas.

1.04 ADJUSTING

Contractor shall adjust operating products and equipment to ensure smooth and unhindered operation.

1.05 RECORD DOCUMENTS AND SHOP DRAWINGS

A. Contractor shall legibly mark each item to record actual construction, including:

(1) Measured depths of foundation in relation to finish floor datum.

(2) Measured horizontal and vertical locations of underground utilities and appurtenances, referenced to permit surface improvements.

(3) Measured locations of internal utilities and appurtenances concealed in construction, referenced to visible and accessible features of the Work.

(4) Field changes of dimension and detail.

(5) Details not on original Contract Drawings

(6) Changes made by modification(s).

(7) References to related Shop Drawings and modifications.

B. Contractor will provide one set of Record Drawings to District.

C. Contractor shall submit all required documents to District and/or Architect prior to or with its final Application for Payment.

1.06 INSTRUCTION OF DISTRICT PERSONNEL

A. Before final inspection, at agreed upon times, Contractor shall instruct District's designated personnel in operation, adjustment, and maintenance of products, equipment, and systems.

B. For equipment requiring seasonal operation, Contractor shall perform instructions for other seasons within six months or by the change of season.

C. Contractor shall use operation and maintenance manuals as basis for instruction. Contractor shall review contents of manual with personnel in detail to explain all aspects of operation and maintenance.

D. Contractor shall prepare and insert additional data in Operation and Maintenance Manual when the need for such data becomes apparent during instruction.

E. Contractor shall review contents of manual with personnel in detail to explain all aspects of operation and maintenance.

1.07 SPARE PARTS AND MAINTENANCE MATERIALS

A. Contractor shall provide products, spare parts, maintenance, and extra materials in quantities specified in the Specifications and in Manufacturer's recommendations.

B. Contractor shall provide District with all required Operation and Maintenance Data at one time. Partial or piecemeal submissions of Operation and Maintenance Data will not be accepted.

PART 2 – PRODUCTS Not Used.

PART 3 – EXECUTION Not Used.

END OF DOCUMENT

DOCUMENT 01 78 23

OPERATION AND MAINTENANCE DATA

PART 1 – GENERAL

1.01 RELATED DOCUMENTS AND PROVISIONS:

All Contract Documents should be reviewed for applicable provisions related to the provisions in this document, including without limitation:

A. General Conditions, including, without limitation, Completion of the Work;

B. Special Conditions.

1.02 QUALITY ASSURANCE:

Contractor shall prepare instructions and data by personnel experienced in maintenance and operation of described products.

1.03 FORMAT:

A. Contractor shall prepare data in the form of an instructional manual entitled "OPERATIONS AND MAINTENANCE MANUAL & INSTRUCTIONS" ("Manual").

B. Binders: Contractor shall use commercial quality, 8-1/2 by 11 inch, three-side rings, with durable plastic covers; two inch maximum ring size. When multiple binders are used, Contractor shall correlate data into related consistent groupings.

C. Cover: Contractor shall identify each binder with typed or printed title "OPERATION AND MAINTENANCE MANUAL & INSTRUCTIONS"; and shall list title of Project and identify subject matter of contents.

D. Contractor shall arrange content by systems process flow under section numbers and sequence of Table of Contents of the Contract Documents.

E. Contractor shall provide tabbed fly leaf for each separate product and system, with typed description of product and major component parts of equipment.

F. Text: The content shall include Manufacturer's printed data, or typewritten data on 24 pound paper.

G. Drawings: Contractor shall provide with reinforced punched binder tab and shall bind in with text; folding larger drawings to size of text pages.

1.04 CONTENTS, EACH VOLUME:

A. Table of Contents: Contractor shall provide title of Project; names, addresses, and telephone numbers of the Architect, any engineers, subconsultants, Subcontractor(s), and Contractor with name of responsible parties; and schedule of products and systems, indexed to content of the volume.

B. For Each Product or System: Contractor shall list names, addresses, and telephone numbers of Subcontractor(s) and suppliers, including local source of supplies and replacement parts.

C. Product Data: Contractor shall mark each sheet to clearly identify specific products and component parts, and data applicable to installation. Delete inapplicable information.

D. Drawings: Contractor shall supplement product data to illustrate relations of component parts of equipment and systems, to show control and flow diagrams. Contractor shall not use Project Record Documents as maintenance drawings.

E. Text: Contractor shall include any and all information as required to supplement product data. Contractor shall provide logical sequence of instructions for each procedure, incorporating manufacturer's instructions.

F. Warranties and Bonds: Contractor shall bind in one copy of each.

1.05 MANUAL FOR MATERIALS AND FINISHES:

A. Building Products, Applied Materials, and Finishes: Contractor shall include product data, with catalog number, size, composition, and color and texture designations. Contractor shall provide information for re-ordering custom manufactured products.

B. Instructions for Care and Maintenance: Contractor shall include Manufacturer's recommendations for cleaning agents and methods, precautions against detrimental agents and methods, and recommended schedule for cleaning and maintenance.

C. Moisture Protection and Weather Exposed Products: Contractor shall include product data listing applicable reference standards, chemical composition, and details of installation. Contractor shall provide recommendations for inspections, maintenance, and repair.

D. Additional Requirements: Contractor shall include all additional requirements as specified in the Specifications.

E. Contractor shall provide a listing in Table of Contents for design data, with tabbed fly sheet and space for insertion of data.

1.06 MANUAL FOR EQUIPMENT AND SYSTEMS:

A. Each Item of Equipment and Each System: Contractor shall include description of unit or system, and component parts and identify function, normal operating characteristics, and limiting conditions. Contractor shall include performance curves, with engineering data and tests, and complete nomenclature, and commercial number of replaceable parts.

B. Panelboard Circuit Directories: Contractor shall provide electrical service characteristics, controls, and communications.

C. Contractor shall include color coded wiring diagrams as installed.

D. Operating Procedures: Contractor shall include start-up, break-in, and routine normal operating instructions and sequences. Contractor shall include regulation, control, stopping, shut-down, and emergency instructions. Contractor shall include summer, winter, and any special operating instructions.

E. Maintenance Requirements: Contractor shall include routine procedures and guide for trouble-shooting; disassembly, repair, and reassembly instructions; and alignment, adjusting, balancing, and checking instructions.

F. Contractor shall provide servicing and lubrication schedule, and list of lubricants required.

G. Contractor shall include manufacturer's printed operation and maintenance instructions.

H. Contractor shall include sequence of operation by controls manufacturer.

I. Contractor shall provide original manufacturer's parts list, illustrations, assembly drawings, and diagrams required for maintenance.

J. Contractor shall provide control diagrams by controls manufacturer as installed.

K. Contractor shall provide Contractor's coordination drawings, with color coded piping diagrams as installed.

L. Contractor shall provide charts of valve tag numbers, with location and function of each valve, keyed to flow and control diagrams.

M. Contractor shall provide list of original manufacturer's spare parts, current prices, and recommended quantities to be maintained in storage.

N. Additional Requirements: Contractor shall include all additional requirements as specified in Specification(s).

O. Contractor shall provide a listing in Table of Contents for design data, with tabbed fly sheet and space for insertion of data.

1.07 SUBMITTAL:

A. Contractor shall submit to the District for review two (2) copies of preliminary draft or proposed formats and outlines of the contents of the Manual within thirty (30) days of Contractor’s start of Work.

B. For equipment, or component parts of equipment put into service during construction and to be operated by District, Contractor shall submit draft content for that portion of the Manual within ten (10) days after acceptance of that equipment or component.

C. Contractor shall submit two (2) copies of a complete Manual in final form prior to final Application for Payment. Copy will be returned with Architect/Engineer comments. Contractor must revise the content of the Manual as required by District prior to District's approval of Contractor's final Application for Payment.

D. Contractor must submit two (2) copies of revised Manual in final form within ten (10) days after final inspection.

PART 2 – PRODUCTS Not Used.

PART 3 – EXECUTION Not Used.

END OF DOCUMENT

DOCUMENT 01 78 36

WARRANTIES

PART 1 - GENERAL

1.01 RELATED DOCUMENTS AND PROVISIONS

All Contract Documents should be reviewed for applicable provisions related to the provisions in this document, including without limitation:

A. General Conditions, including, without limitation, Warranty/Guarantee Information;

B. Special Conditions.

1.02 FORMAT

A. Binders: Contractor shall use commercial quality, 8-1/2 by 11 inch, three-side rings, with durable plastic covers; two inch maximum ring size.

B. Cover: Contractor shall identify each binder with typed or printed title "WARRANTIES" and shall list title of Project.

C. Table of Contents: Contractor shall provide title of Project; name, address, and telephone number of Contractor and equipment supplier; and name of responsible principal. Contractor shall identify each item with the number and title of the specific Specification, document, provision, or section in which the name of the product or work item is specified.

D. Contractor shall separate each warranty with index tab sheets keyed to the Table of Contents listing, providing full information and using separate typed sheets as necessary. Contractor shall list each applicable and/or responsible Subcontractor(s), supplier(s), and/or manufacturer(s), with name, address, and telephone number of each responsible principal(s).

1.03 PREPARATION:

A. Contractor shall obtain warranties, executed in duplicate by each applicable and/or responsible subcontractor(s), supplier(s), and manufacturer(s), within ten (10) days after completion of the applicable item or work. Except for items put into use with District's permission, Contractor shall leave date of beginning of time of warranty blank until the date of completion is determined.

B. Contractor shall verify that documents are in proper form, contain full information, and are notarized, when required.

C. Contractor shall co-execute submittals when required.

D. Contractor shall retain warranties until time specified for submittal.

1.04 TIME OF SUBMITTALS:

A. For equipment or component parts of equipment put into service during construction with District's permission, Contractor shall submit a draft warranty for that equipment or component within ten (10) days after acceptance of that equipment or component.

B. Contractor shall submit for District approval all warranties and related documents within ten (10) days after date of completion. Contractor must revise the warranties as required by the District prior to District's approval of Contractor's final Application for Payment.

C. For items of work delayed beyond date of completion, Contractor shall provide an updated submittal within ten (10) days after acceptance, listing the date of acceptance as start of warranty period.

PART 2 - PRODUCTS Not Used.

PART 3 – EXECUTION Not Used.

END OF DOCUMENT

DOCUMENT 01 78 39

RECORD DOCUMENTS

PART 1 - GENERAL

1.01 RELATED DOCUMENTS AND PROVISIONS:

All Contract Documents should be reviewed for applicable provisions related to the provisions in this document, including without limitation:

A. General Conditions, including, without limitation, Documents on Work;

B. Special Conditions.

PART 2 - RECORD DRAWINGS

2.01 GENERAL:

A. As indicated in the Contract Documents, the District will provide Contractor with one set of reproducible, full size original Contract Drawings (mylars).

B. Contractor shall maintain at each Project Site one set of marked-up plans and shall transfer all changes and information to those marked-up plans, as often as required in the Contract Documents, but in no case less than once each month. Contractor shall submit to the Project Inspector one set of reproducible vellums of the Project Record Drawings ("As-Builts") showing all changes incorporated into the Work since the preceding monthly submittal. The As-Builts shall be available at the Project Site. The Contractor shall submit reproducible vellums at the conclusion of the Project following review of the blueline prints.

C. Label and date each Record Drawing "RECORD DOCUMENT" in legibly printed letters.

D. All deviations in construction, including but not limited to pipe and conduit locations and deviations caused by without limitation Change Orders, Construction Claim Directives, RFI's, and Addenda, shall be accurately and legibly recorded by Contractor.

E. Locations and changes shall be done by Contractor in a neat and legible manner and, where applicable, indicated by drawing a "cloud" around the changed or additional information.

2.02 RECORD DRAWING INFORMATION:

A. Contractor shall record the following information:

(1) Locations of Work buried under or outside each building, including, without limitation, all utilities, plumbing and electrical lines, and conduits.

(2) Actual numbering of each electrical circuit to match panel schedule.

(3) Locations of significant Work concealed inside each building whose general locations are changed from those shown on the Contract Drawings.

(4) Locations of all items, not necessarily concealed, which vary from the Contract Documents.

(5) Installed location of all cathodic protection anodes.

(6) Deviations from the sizes, locations, and other features of installations shown in the Contract Documents.

(7) Locations of underground work, points of connection with existing utilities, changes in direction, valves, manholes, catch basins, capped stubouts, invert elevations, etc.

(8) Sufficient information to locate Work concealed in each building with reasonable ease and accuracy.

In some instances, this information may be recorded by dimension. In other instances, it may be recorded in relation to the spaces in the building near which it was installed.

B. Contractor shall provide additional drawings as necessary for clarification.

C. Contractor shall provide reproducible record drawings, made from final Shop Drawings marked "No Exceptions Taken" or "Approved as Noted."

D. After review and approval of the marked-up specifications by the Project Inspector, Contractor shall provide electronic copies of the drawings (in PDF format) with one file with all of the sheets and one set of individual sheet files at the conclusion of the Project.

PART 3 - RECORD SPECIFICATIONS

3.01 GENERAL:

A. Contractor shall mark each section legibly to record manufacturer, trade name, catalog number, and supplier of each Product and item of equipment actually installed.

B. After review and approval of the marked-up specifications by the Project Inspector, Contractor shall provide one electronic copy of the specifications (in PDF format) at the conclusion of the Project.

PART 4 - MAINTENANCE OF RECORD DOCUMENTS

4.01 GENERAL

A. Contractor shall store Record Documents apart from documents used for construction as follows:

(1) Provide files and racks for storage of Record Documents.

(2) Maintain Record Documents in a clean, dry, legible condition and in good order.

B. Contractor shall not use Record Documents for construction purposes.

PART 5 – PRODUCTS Not Used.

END OF DOCUMENT

SECTION 13 11 00
SWIMMING POOL CONTRACTOR GENERAL REQUIREMENTS

PART 1 - GENERAL

1.1 REFERENCE

A. Requirements in Addenda, Alternates and Conditions collectively apply to this work.

1.2 SUMMARY

A. Principal Work Items Are:

(1) Pool Contractor Qualifications and Responsibilities.

B. Related Work Specified Elsewhere:

(1) Section 131109 – Start Up

(2) Section 131110 – Swimming Pool Recirculation Equipment

(3) Section 131115 – Swimming Pool Deck Equipment

(4) Section 131116 – Swimming Pool Underwater Lights

(5) Section 131125 – Swimming Pool Cementitious Waterproofing

(6) Section 131140 – Swimming Pool Plaster

(7) Section 131145 – Swimming Pool Trim Tile

1.3 CONTRACTOR'S ALTERNATE PROPOSAL

A. Contractor shall submit their bid to the owner based on materials, equipment and methods as specified in this section. No substitutions of material will be allowed.

B. It is the intent of the contract documents to encourage competition. The base proposal must be on providing the construction methods and equipment as specified and detailed. Any proposed system substitution must have prior written approval by the Architect.

C. If there is any deviation from the basis of design equipment, it is the responsibility of the Contractor to confirm that all engineering criteria are appropriate for the substituted equipment.

D. All proposed substitutions of specified construction methods and equipment shall include a complete submittal as required by these specifications and drawings of appropriate scale incorporating all required changes. The Contractor shall provide a list of at least ten (10) satisfactory installations comparable to this project that have been manufactured and installed under the manufacturer's current legal name. Submit a list of such projects with the

name, address and current telephone number of the Owner's Operator and Architect of Record to the Architect on the bid date.

E. Any changes or modifications to the contract documents that are not authorized by the Owner or Architect shall be the sole responsibility of the Contractor.

1.4 SUBMITTALS

A. Refer to Division 1 for submittal requirements.

1.5 POOL CONTRACTOR QUALIFICATIONS

A. It is the intent of the Owner to award this Contract based on the specific experience and financial means required to complete the specified work on the swimming pool system. The successful bidder must be regularly engaged in the construction of commercial pools. Each bidding Contractor shall demonstrate their specific experience and competency by complying with the following requirements.

(1) The Pool Contractor must provide a written statement from an approved bonding company certifying that the Contractor can qualify for 100% Performance and Labor - Material Bonds on this Project.

(2) The Pool Contractor shall provide evidence of having a Contractor's License C53 in the state of the California.

(3) The Pool Contractor shall show evidence of having adequate experience in constructing commercial pools. In order to be considered for this Project the Pool Contractor must have completed within the last five years plaster applications of at least five (5) public use 25-Yard size pools with a plaster and tile finish and a perimeter overflow gutter in conjunction with a self-modulating surge and balance tank system. All these pools shall have been in operation for at least one year. Submit a list of such projects with the name, address, and current telephone number of the Owner and Architect for reference.

1.6 POOL CONTRACTOR RESPONSIBILITIES

A. It is the intent of this section to place the entire responsibility for the application of the plaster and tile finish of the swimming pool (including refurbishment and/or installation of all swimming pool related items) under one vested Contractor. Under this section the Pool Contractor will provide but is not necessarily limited to the following:

(1) Providing labor, material, management and coordination of own personnel and specialty subcontractors experienced in commercial pool building to produce a functioning Swimming Pool finish ready for public use upon completion of the Work. Provide all equipment and services required for erection and delivery onto the premises of any equipment or apparatus furnished. Remove equipment from premises when no longer required.

(2) Confirm all electrical conduits that penetrate the pool shell are watertight and installed per N.E.C. Article 680.

(3) Provide cleaning of the surge tank and overflow perimeter skimming system (gutter) of all loose debris and sediment. Flush all piping lines. Contractor may not utilize cleaning equipment to be provided to the Owner.

(4) Provide Cementitious Waterproofing for pool main drain sumps, gutter trough, and surge tank. Reference Section 131125 – Cementitious Waterproofing.

(5) Furnish and install a plaster finish in the pool with a slip resistant surface per Specification Section 131140 – Swimming Pool Plaster. Furnish and install specialty tile for the perimeter waterline, gutter nosing, wall targets, floor return inlets, main drains, floor lane markings, depth markings and warning signs, and all other tile installation within the pool structures. Reference Section 131145 - Swimming Pool Trim Tile - including the tolerance requirements for the concrete substrate.

(6) Provide initial pool water fill and initial chemical balancing, Ryznar Stabilization, Langelier Index.

(7) Provide deck equipment, loose deck equipment, competitive equipment, anchor inserts, and fasteners.

(8) Provide Swimming Pool and related equipment Start-Up as stated in Section 131109, Article 3.03 including minimum consecutive 14-day trouble-free operation. Start, test, calibrate and adjust all mechanical equipment, electrical equipment, recirculation, chemical, and other supplied systems including deck, loose, maintenance, and safety equipment. Instruct the Owner's representative in the systems operation and maintenance as described herein.

(9) Assemble and install the cleaning and maintenance equipment for the pool as specified herein.

(10) Provide for the storage of all pool related equipment, materials and systems. All items are the responsibility of the Contractor until accepted by owner.

(11) Obtain final acceptance by jurisdictional health departments.

(12) Swimming Pool Certification

(a) The Contractor shall provide the services of a registered engineer or land surveyor who shall measure and certify the elevations of the gutter lip at 10 foot centers as well as the length of each lane for each possible racing course. Course length survey must be made with the pool filled with water between 78 and 82 degrees Fahrenheit.

B. Related work specified in other sections

(1) The following work related to the swimming pools may be completed by other contractors.

(a) Provide, erect and maintain all necessary barricades, signs, lights and flares for pool construction to protect workers and the public.

(b) Provide rules and regulations signage as required by code. Reference Division 1 - General Requirements.

PART 2 - Unused

PART 3 - Execution

3.1 TOLERANCES FOR CONSTRUCTION OF THE POOL SHELL

A. The completed finishes shall be constructed level and to the dimensions, elevation, depths and thickness as shown on the plans.

B. The elevation tolerance of the pool shell and gutter lip shall be plus or minus 1/8 inch.

C. The vertical wall surface tolerance of the pool shell, for the first 36 inches from the water surface shall be plus or minus 1/4 inch from plumb measured with a 6 foot straight edge.

D. For competitive race courses, the following pool shell tolerances shall apply:

Course	Tolerance	Minimum	Maximum
25 yard	+ 1 3/16” / -0”	75’ – 3/4"	75’ – 1 15/16”

E. The above dimensions include allowances for a touchpad at each end of the course. The maximum dimension includes the construction tolerance.

F. The above dimensions apply to a vertical plane extending 1’-0” above and 3’-0” below the surface of the water at all points of both end walls.

G. Ground wires or grade pins, if used, shall be installed in such a manner that they accurately outline the section of the pool shell as indicated on the plans. They shall be located at intervals sufficient to insure proper thickness throughout and shall be maintained tight. Grade pins or grounding wires shall not be permanently embedded in the pool shell.

3.2 AS-BUILT DOCUMENTS

A. Refer to Division 1 for As-Built Documentation requirements.

B. Contractor shall provide As-built engineering construction drawings that depict actual as-built conditions of the completed construction as a permanent record of each project feature.

C. Contractor shall provide engineering construction drawings depicting actual routing, size and placement of all pool piping, valves, supports.

D. Contractor shall provide engineering construction drawings depicting actual routing, sizing and placement of all pool electrical conduits and note circuitry and conductor routing.

E. Contractor shall provide engineering construction drawings depicting actual routing, sizing, and placement of all utilities, including sanitary sewer, storm sewer, fresh water, and natural gas lines.

F. Contractor shall provide engineering construction drawings depicting actual routing, sizing and placement of timing system conduits.

3.3 CLOSE OUT SUBMITTALS

A. Refer to Division 1 for Close Out Submittal requirements.

3.4 CONCLUSION

A. It is the intention of these specifications to provide a complete installation. All accessory construction and apparatus necessary in the operation or testing of the performance of the work shall be included. The omission of specific reference to any part of the work necessary for such complete installation shall not be interpreted as relieving the Contractor from furnishing and installing such parts. Any such omission or clarification shall be brought to the attention of the Architect prior to bidding as provided in this section.

END OF DOCUMENT

SECTION 131109
SWIMMING POOL START UP

PART 1 - GENERAL

1.1 SUMMARY

A. Principal work items are:

1. Principal work items are:

   a. Pool Fill and Chemical Balance
   b. Installation & Operation Certification
   c. Owner System Training
   d. Project Turnover
   e. Operation and Maintenance Manuals and Closeout Submittals

B. Related work specified elsewhere:

1. Section 131110 – Swimming Pool Recirculation Equipment
2. Section 131111 – Swimming Pool Piping
3. Section 131115 – Swimming Pool Deck Equipment
4. Section 131116 – Swimming Pool Underwater Lights
5. Section 131140 – Swimming Pool Plaster

1.2 COORDINATION AND CLARIFICATION

A. Coordinate with other contractors or subcontractors all work relating to this section.

B. The Contractor must establish with other contractors or subcontractors, having related work in this section, that all work necessary to complete the pool(s) as shown on the drawings and in the specifications is included in the base bid and alternates to the Owner.

C. If in doubt regarding the responsibility for work covered in this section and/or discovery of errors or omissions in the bidding documents, the Contractor shall notify the Architect through channels established by the specifications and request a clarification ten (10) days prior to the bid date.

1.3 OPERATION AND MAINTENANCE MANUALS AND CLOSE-OUT SUBMITTALS

A. Three weeks prior to filling of pool, submit to the Engineer Start-up Chemical Dosing procedure with listed chemicals and quantities.

B. Detailed operation and maintenance information shall be supplied for all equipment requiring maintenance or other attention. The equipment supplier and/or Contractor shall prepare an operation and maintenance manual for all equipment. Parts lists and operating and maintenance instructions shall be provided.

C. Each operation and maintenance manual shall include the following:

1. Equipment function and calibration, normal operating characteristics, and limiting conditions.
2. Assembly, installation, alignment, adjustment and checking instructions.
3. One set of applicable submittals shall be included in each manual.

D. The operation and maintenance manuals shall be in addition to any instructions or parts lists packed with or attached to the equipment when delivered, or which may be required by the Contractor.

E. Manuals and other data shall be printed on heavy, first quality paper, 8-1/2 in x 11 in size with standard 3-hole punching and inserted in plastic covers. Drawings and diagrams shall be reduced to 8-1/2 in x 11 in or 11 in x 17 in. Where reduction is not practical, larger drawings shall be folded separately and placed in envelopes that are bound into the manuals. Each envelope shall bear suitable identification on the outside.

F. Two (2) flash drives, each containing electronic PDF formats of all manuals and other data, shall be submitted. Drives to have an integrated Universal Serial Bus (USB) interface. One shall be Type USB-A. One shall be Type USB-C.

G. All material shall be marked with project identification. Non-applicable information shall be marked out or deleted.

H. Shipment of equipment will not be considered complete until all required manuals and data have been received.

1.4 RECORD DRAWINGS

A. Provide a complete set of record drawings of the entire pool system(s) including all sub-systems. All record drawings shall be prepared in accordance with the requirements of Division 1 for As-Built Documentation and shall be a complete, stand-alone set. The Contractor shall be permitted to obtain original documents and copy them for this purpose only. Provide the record set on compact disk (AutoCAD Release 2022 or compatible software).

1.5 POOL FILL WATER QUALITY

A. The Owner shall bear the cost of water required for the final filling. Removal of iron or copper (if in excess of .3 ppm) will be required for the final fill to avoid staining of the pool finish, the cost of such on the final filling shall be on the owner. Any subsequent fillings or partial fillings (more than 25%) of the pool shall be by the Contractor, at their own expense.

B. The Contractor shall provide the necessary plant equipment so that the temperature of fill water will be within plus or minus 10 degrees of the ambient air and/or the pool structure at the time of filling. Extreme caution is urged if the temperature variance is greater than 10 degrees F.

C. The Contractor shall provide the necessary chemicals and to adjust and balance the

water chemistry in the pools to the following levels:

1. pH: 7.2-7.4
2. Calcium Hardness: 200-400 PPM
3. Total Alkalinity (Calcium Hypochlorite): 60-80 PPM
4. Total Alkalinity (Sodium Hypochlorite): 80-120 PPM
5. Langelier Saturation Index: -0.3 +- 0.3
6. Total Dissolved Solids (TDS): Not to exceed 1,500 PPM

1.6 START-UP CHEMICALS

A. The Contractor shall maintain the chemical balance of the pool water (including the cost of all chemicals required) until the project, pool and mechanical system(s) are fully operational and accepted by the Architect and the Owner.

B. The Contractor may utilize the chemical storage and delivery systems during initial chemical balancing where appropriate.

C. The Contractor shall confirm all chemicals necessary for initial pool balance are on site 3 days prior to the start of plaster application.

D. Provide the Owner with sufficient quantities of the necessary chemicals to maintain the pool operation for minimum of thirty (30) days from substantial completion or the Owner begins using the pool.

E. Chemicals to be provided to the Owner shall include those required by the chemical feed systems installed.

PART 2 - PRODUCTS (Not Used)
PART 3 - EXECUTION

3.1 EXISTING CONDITIONS, INSPECTION AND PREPARATION

A. Carefully examine all of the contract documents for requirements that affect the work of this section. Prior to starting any work, notify the General Contractor of defects requiring correction. Do not start work until conditions are satisfactory.

B. Verify that all work by others, related to this section, has been completed. This includes all earthwork, concrete work, and mechanical, electrical and plumbing connections.

C. Protect all materials and work completed by others from damage while completing the work in this section.

3.2 INSTALLATION CERTIFICATION

A. The Contractor shall obtain certification of manufacturer's approved installation on the following components or systems for each pool:

1. Accessible Lift(s)

3.3 START UP

A. Upon plastering of pool, refer to Specification 131140 for pool plaster curing process requirements.

B. Provide final cleaning of the surge tank, overflow perimeter skimming system (gutter) and swimming pool of all loose debris and sediment. Contractor may not utilize cleaning equipment to be provided to the Owner.

C. Provide Swimming Pool and related equipment Start-Up. Start, test, calibrate and adjust all mechanical equipment, electrical equipment, recirculation, chemical, and other supplied systems.

D. Provide proof of minimum consecutive 14-day trouble-free operation. Lack of chemicals or other non-critical items shall not require a re-start of the trouble-free period but may result in a pause of the trouble-free period.

E. Provide final cleaning of the surge tank, overflow perimeter skimming system (gutter) and swimming pool of all loose debris and sediment. Contractor may not utilize cleaning equipment to be provided to the Owner.

F. Provide certification that the entirety of pool systems are operational and function correctly through all phases of operation.

3.4 SYSTEM TRAINING

A. A qualified representative of the Contractor performing work under this section shall put the equipment into operation and instruct the Owner's representatives in the operation of this equipment to the Owner's satisfaction immediately after project’s substantial completion.

B. The Contractor’s training representative shall have completed the equipment/system’s manufacturer’s training requirements and be certified, by the manufacturer, to provide and teach system training.

C. The representative from the Contractor shall be either a CPO (Certified Pool Operator) or have an AFO (Aquatic Facility Operator) certification.

3.5 PROJECT TURNOVER

A. Prior to leaving the job, the Swimming Pool Contractor shall obtain written certification from the designated Owner's representative acknowledging that the instruction period has been completed and all necessary operating information provided. The Swimming Pool Contractor shall, in their contract, include the cost of one (1) additional days (total 4 hours) of instruction and operational check out by the qualified representative of the Swimming Pool Contractor during the first year of operation.

B. The Contractor shall provide specific written procedures to be followed for emptying and refilling the pool as mentioned previously in this section. The procedures must be included in the bound volume of operating instructions and references in the front index with a note headed by the words: "CAUTION -- VERY IMPORTANT".

END OF SECTION 131109

SECTION 13 11 10
SWIMMING POOL RECIRCULATION SYSTEMS

PART 1 - GENERAL

1.1 COORDINATION AND CLARIFICATION

A. Coordinate with other contractors or subcontractors all work relating to this section.

B. The Contractor must establish with other contractors or subcontractors, having related work in this section, that all work necessary to complete the pool(s) as shown on the drawings and in the specifications is included in the base bid and alternates to the Owner.

C. If in doubt regarding the responsibility for work covered in this section and/or discovery of errors or omissions in the bidding documents, the Contractor shall notify the Architect through channels established by the specifications and request a clarification ten (10) days prior to the bid date.

1.2 SUBMITTALS

A. All submittals shall be made in accordance with the requirements of Division 1 - General Requirements and in strict compliance with the following procedures and guidelines.

1.3 CONTRACTOR'S ALTERNATE PROPOSAL

A. Contractor shall submit their bid to the owner based on materials, equipment and methods as specified in this section. No substitutions of material will be allowed.

1.4 WARRANTIES

A. The Contractor warrants to the Owner and Architect that materials and equipment provided under the contract will be of good quality and new unless otherwise required or permitted by the contract documents, that the work will be free from defects not inherent in the quality required or permitted, and that the work will conform with the requirements of the contract documents. Work not conforming to these requirements, including substitutions not properly approved and authorized will be considered defective. The Contractor's warranty will exclude remedies for damage or defect caused by abuse, improper or insufficient maintenance, improper operations, modifications not executed by the Contractor or improper wear and tear under normal use. If required by the Architect, the Contractor shall furnish satisfactory evidence as to the kind and quality of materials and equipment. All warranties shall be for a period of one year from the date of substantial completion or the owner begins using the pool unless otherwise specified.

B. The Contractor shall agree to repair or replace any defective or non-complying work at no cost to the Owner upon written notification from the Owner within the warranty period. Pro-rated warranties are not acceptable.

C. Submit all warranties covering, but not limited to the following:

(1) Defects in material, manufacture or installation of the interior coating of the trench for a period of one (1) year.

(2) Defects in material, workmanship, and installation of the pool cementitious finish against cracking and delamination for a period of three (3) years.

(3) Defects in material, workmanship, and installation of the tile trim finish against cracking and delamination for a period of five (5) years.

(4) Manufacturer's minimum five (5) year warranty against defective materials, components and workmanship in the pool cover system and reels.

PART 2 - PRODUCTS

2.1 RECIRCULATION FITTINGS

A. Suction outlet fitting assemblies shall be constructed of UV stabilized PVC material. New grates shall be certified to NSF/ANSI/CAN50 and ANSI/APSP/ICC-16 2017. The grate shall fit closely and flush with top surface of frame and secured to frame with vandal proof stainless steel fasteners. The frame shall be installed atop the existing sump. All exposed edges of main outlets shall be rounded and smooth, free of burrs and sharp edges.

(1) Suction outlet fitting assemblies shall be model MLD-FG-1836 18-inch by 36-inch frame and grate manufactured by Lawson Aquatic. Dimensions shall be 18 inches by 36 inches with a minimum approved flow rate for floor installation of 2,080 GPM or approved equal. Quantity two (2).

B. Adjustable floor inlet fittings shall be provided each consisting of an ABS plastic body and adjusting top plate with a positive locking device. A spanner wrench shall be provided to facilitate flow adjustment. The inlet body shall be provided with a 2-inch cycolac solvent weld connection and internal NPT threads to facilitate line pressure testing. Floor inlet fittings shall be Pentair/Sta-Rite No. 8417-0000-White and Pentair/Sta-Rite No. 8417-0200-Black or approved equal. Color to match surrounding tile.

C. Grating at gutter dropouts shall be constructed of be constructed of UV stabilized PVC material. The grate shall fit closely and flush with top surface of frame and secured to frame with vandal proof stainless steel fasteners. The frame shall be installed atop the existing dropouts. All exposed edges of main outlets shall be rounded and smooth, free of burrs and sharp edges. Grating to be similar to the existing frames.

2.2 INSERTS

A. Recessed steps shall be a single molding of white ABS with an integral slip resistant tread surface. The step shall be 17.5 in. wide by 7in. deep at the out edges of the lip. Color to be white. Step by S.R. Smith or approved equal.

PART 3 - EXECUTION

3.1 RECIRCULATION FITTINGS

A. Prior to purchase of suction outlet fitting assemblies, Contractor shall verify dimensions of existing sumps and shall communicate with grate manufacturer to certify compliance of sump and grate with ANSI/APSP/ICC-16 2017.

B. Grout suction outlet frame in place simultaneously with the trim tile installation.

3.2 INSERTS

A. Recessed steps shall be set with non-shrink grout. All portions of the backside shall be completely filled with non-shrink grout and set into the wall block-out.

3.3 EXISTING CONDITIONS, INSPECTION AND PREPARATION

A. Carefully examine all of the contract documents for requirements that affect the work of this section. Prior to starting any work, notify the General Contractor of defects requiring correction. Do not start work until conditions are satisfactory.

B. Verify that all work by others, related to this section, has been completed. This includes all earthwork, concrete work, and mechanical, electrical and plumbing connections.

C. Protect all materials and work completed by others from damage while completing the work in this section.

3.4 FIELD MEASUREMENTS

D. Verify benchmark and pool location prior to layout.

E. If field measurements differ from the construction drawing dimensions, notification shall be given to the Architect prior to proceeding with work.

3.5 EQUIPMENT AND SYSTEMS INSTALLATION

F. The Contractor shall assemble and install all equipment, special parts and accessories as shown on pool drawings, specifications and shop drawings of the equipment suppliers.

G. The Contractor shall provide all anchors and inserts to be imbedded in the deck including all fittings, inserts and structure sleeves and required anchorage as shown on the plans and as indicated in this section of the specifications. Equipment shall be set true and plumb, using factory jigs where available. Removable equipment items shall be easily removable from anchors and shall fit without noticeable wobble.

H. Provide templates for all equipment anchors. Provide anchor bolts of the size and spacing as required by the equipment manufacturer. All anchor bolts shall be stainless steel Type 316L and of a length capable of adequate anchorage into rough slab-on-grade allowing for finish deck tile and setting bed. Anchors shall be set and cast into place during building concrete work. Inspect all anchor settings for horizontal and vertical alignment prior to placing concrete.

I. The Contractor shall install all equipment and systems in accordance with manufacturer's directions. Equipment shall all be assembled and in place for final observation.

J. All items necessary to complete this section are shown on the plans or described in the specifications including items that may be purchased by the Owner. Items are detailed and specified as a guide for dimensional purposes. The Contractor must make provisions accordingly and submit shop drawings and submittals based on that data.

3.6 START-UP AND INSTRUCTION

K. The Contractor shall supply the services of an experienced swimming pool operator/instructor for a period of not less than two days (total 16 hours) after the pool(s) have been filled and initially placed in operation. During this period, the Owner's representatives who will be operating the pool(s) shall be thoroughly instructed in all phases of the pool's operation. The Contractor shall deliver six (6) complete sets of operating and maintenance instructions for the swimming pool, structures, finishes and all component equipment. Prior to leaving the job, the Contractor shall obtain written certification from the designated Owner's representative acknowledging that the instruction period has been completed and all necessary operating information provided. The Contractor shall, in his contract, include the cost of two (2) additional days (total 16 hours) of instruction and operational check out by the qualified representative of the Contractor during the first season of operation.

L. Written reports of each of these visits outlining the pool's operation, competence and performance of the pool's operation personnel, and other pertinent comments shall be submitted to the Owner and Architect/Engineer within one (1) week after each visit.

M. The Contractor shall provide specific written procedures to be followed for emptying and refilling the pool as mentioned previously in this section. The procedures must be included in the bound volume of operating instructions and references in the front index with a note headed by the words: "CAUTION -- VERY IMPORTANT".

END OF DOCUMENT

SECTION 131115
SWIMMING POOL DECK EQUIPMENT

PART 1 - GENERAL

1.1 SUMMARY

A. Principal work items are:

1. Swimming Pool related anchored deck equipment
2. Swimming Pool related loose deck equipment

1.2 COORDINATION AND CLARIFICATION

A. Coordinate with other contractors or subcontractors all work relating to this section.

B. The Contractor must establish with other contractors or subcontractors, having related work in this section, that all work necessary to complete the pool(s) as shown on the drawings and in the specifications is included in the base bid and alternates to the Owner.

C. If in doubt regarding the responsibility for work covered in this section and/or discovery of errors or omissions in the bidding documents, the Contractor shall notify the Architect through channels established by the specifications and request a clarification ten (10) days prior to the bid date.

1.3 PRODUCT DELIVERY, STORAGE, AND HANDLING

A. Deliver material in manufacturer's original, unopened containers and crates with all labels intact and legible.

B. Deliver materials in sufficient time and quantity to allow continuity of work and compliance with approved construction schedule.

C. Handle materials in a manner to prevent damage.

D. Store all materials on clean raised platforms with weather protective coverings. Provide continuous protection of materials against damage or deterioration.

E. Remove damaged materials from site.

1.4 WARRANTIES

A. The Contractor warrants to the Owner and Architect that materials and equipment provided under the contract will be of good quality and new unless otherwise required or permitted by the contract documents, that the work will be free from defects not inherent in the quality required or permitted, and that the work will

conform with the requirements of the contract documents. Work not conforming to these requirements, including substitutions not properly approved and authorized will be considered defective. The Contractor's warranty will exclude remedies for damage or defect caused by abuse, improper or insufficient maintenance, improper operations, modifications not executed by the Contractor or improper wear and tear under normal use. If required by the Architect, the Contractor shall furnish satisfactory evidence as to the kind and quality of materials and equipment. All warranties shall be for a period of one year from the date of substantial completion or the owner begins using the pool unless otherwise specified.

B. The Contractor shall agree to repair or replace any defective or non-complying work at no cost to the Owner upon written notification from the Owner within the warranty period. Pro-rated warranties are not acceptable.

C. Submit all warranties covering, but not limited to the following:

1. All pool deck equipment and accessories against defects in material, manufacturer and installation for a period of one (1) year.
2. Manufacturer's minimum three (3) year warranty against defective materials, components and workmanship in the pool cover system and reels.

PART 2 - PRODUCTS

2.1 IN-POOL EMBEDDED ITEMS

A. Recessed Step Inserts

1. Recessed step inserts shall be a single molding of white ABS with an integral slip resistant tread surface. The step shall be 16.5 in. wide by 6 in. deep. All portions of the backside shall be completely filled with non-shrink grout and set into the wall block-out and mortared in with non-shrink grout. Step by KDI Paragon, S.R. Smith, or approved equal.

2.2 RAIL GOODS

A. Handrails

1. New entry rails shall be provided as shown on the drawings, fabricated from one continuous piece of polished and buffed ASTM-A-554 grade 304L stainless steel, 1.900 inch OD x .145 inch wall thickness (contractor to confirm exisitng rail anchor dimension onsite), polished and buffed to 320 grit finish and shall be passivated for maximum corrosion resistance. Bends shall be smooth and wrinkle free. Custom rails shall be as manufactured by Spectrum Products, or approved equal. Custom rail submittal drawings shall be complete with details of custom fabrication and installation information. Contractor to confirm handrail OD and dimensions to match existing handrails.
2. Escutcheons shall be provided at all handrails and shall be of keyhole or oblong shape, similar to the casted, electro-polished stainless steel escutcheon with set screw by Spectrum Products, or approved equal.
3. Anchor sockets for handrails at the stair entry (1 per rail, pool side only) shall

be of the wedge type, cast bronze, 4 inches in depth and made to receive 1.50 inch OD tubing as manufactured by Spectrum Products, or approved equal. Contractor to confirm compatibility with existing handrails. The wedge shall be cast bronze, incorporate a stainless steel tightening bolt and flat washer, and be designed as the sacrificial element to the anchor system. All metallic components shall be passivated, in compliance with ASTM A967-99, incorporating organic acid passivation techniques for maximum corrosion resistance.

B. Grab Rails

1. Existing grab rails to be factory polished and reinstalled.

C. Pool Ladder

1. Existing Ladder rails to be factory polished and reinstalled
2. New rubber bumpers shall be supplied by the original manufacturer, or approved equal.
3. New escutcheons shall be provided at all grab rails and shall be of keyhole or oblong shape, similar to the casted, electro-polished stainless steel escutcheon with set screw by Spectrum Products, or approved equal.

D. Stainless Steel Cleaner - Provide a stainless steel cleaner. The cleaner shall comprise of one (1) gallon of organic passivation solution. It shall be complete with instructions for proper maintenance of stainless steel surfaces and material safety data sheets for the passivation solution. The cleaner shall be the Spectra-Clean System 2 as manufactured by Spectrum Products. Product to be applied with 3M scouring pad, or approved equal.

2.3 FLOATING LIFE-LINE (DEPTH TRANSITION)

A. Lifeline shall be 1/2 inch nylon braided rope 25 yards in length with rope hooks. blue and white polyethylene rope with floats that are 5 inch diameter by 9 inch long. Floats to be spaced on two yard centers. All metallic rope hooks shall be stainless steel. Lifeline, floats, and rope end hooks to be EZ-Lock pool rope floats manufactured by Competitor.

2.4 COMPETITIVE SWIM EQUIPMENT

A. Floating Lane Lines

1. Competition floating lane lines shall be as described in these specifications. Floating lane lines shall be a non-turbulent type with wave quelling floats and 3/16” stainless steel coated cable. Floats shall be injection-molded polyethylene.
2. 25 Yard Floating Lane Lines - Colors to alternate the length of the pool with a contrasting solid color for the first and final 15 feet. Provide contrasting disks located 15 meters from each end to meet resurfacing requirement. Contractor to submit product for color selection.
3. All floating lane lines shall be provided as completely assembled and installed with take up reel, type 304 stainless steel spring and cable lock, hooks, and

wrench. 5/8” wrench shall be made of a forged steel shaft with a polished chrome finish.

4. Floating lane lines shall be pre-assembled and sized to fit the length of the pool.
5. The take up reel shall be constructed of type 304 stainless steel. The spool shall be a bronze nickel-plated casting with a nylon sleeve.
6. Floating lane lines shall be Competitor Swim Products, Competitor Gold Medal 4” Lanes or approved equal.
7. Quantity-1: Fifteen (15) with 2 wrenches.
8. Lane lines to be checked for fit by Contractor prior to site turnover.

B. Extension hooks

1. Provide lane line extension hooks as detailed on the drawings complete with protective sleeve as manufactured by Competitor Swim Products.
2. Quantity-2: Thirty (30)

C. BID ALTERNATE Lane Line Storage Reel (Swimming & Water Polo)

1. Lane line storage reel shall be fabricated from a heavy-duty aluminum reel joined together by a 1-1/2 inch aluminum axle. This unit must ride easily on four hard rubber wheels. The Contractor is responsible for assembly. The correct number of storage reels shall be provided to store all floating lane lines.
2. Lane line storage reel to be Elite Stor-Reel manufactured by Competitor Swim Products with Competitor storage reel cover, or approved equal. Color to be Red and Blue.
3. Quantity-3: Three (3). Contractor to confirm this amount has sufficient capacity to store all floating lane lines (including water polo course) at the same time.

D. Backstroke Flags

1. Backstroke flags shall be made of nylon material, triangular in shape (12” wide x 18” long), and alternating in color, butted end to end with vinyl coated stainless steel cable and take up reel. Submit for color review and approval. The cable shall be attached to a stainless steel take up reel at one end and a stainless-steel tension spring end-fitting at the other.

2.5 WATER POLO EQUIPMENT

A. BID ALTERNATE Floating Water Polo Course

1. Water polo floating lines shall be as described in these specifications. Floating lines shall be a non-turbulent type with wave quelling floats and 3/16” stainless steel coated cable. Floats shall be injection-molded polyethylene. All floating lines shall be provided as completely assembled and installed with take up reel, type 304 stainless steel spring and cable lock, hooks, and wrench. Water polo floating lines shall be pre-assembled and sized to fit the length of the water polo course. Floats shall be colored per NFHS, NCAA and FINA. Water polo floating lines shall be similar to Competitor Swim Products Water Polo Rink or approved equal.

2. Quantities: One (1)

   a. Provide 2 boundary lines for 25-meter water polo field of play
   b. Provide eight (8) goal tether lines with 4” white disks with a FINA/NCAA field of play.

      1) Four (4) tether lines shall include 2 meters long x 1.08 meters wide area of solid red disks to identify the re-entry area per FINA WP1.2 field of play diagram.

   c. Course to be checked for fit by Contractor prior to site turnover.

PART 3 - EXECUTION

3.1 EQUIPMENT AND SYSTEMS INSTALLATION

A. The Contractor shall assemble and install all equipment, special parts and accessories as shown on pool drawings, specifications and shop drawings of the equipment suppliers.

B. The Contractor shall provide all anchors and inserts to be imbedded in the deck including all fittings, inserts and structure sleeves and required anchorage as shown on the plans and as indicated in this section of the specifications. Equipment shall be set true and plumb, using factory jigs where available. Removable equipment items shall be easily removable from anchors and shall fit without noticeable wobble.

C. Provide templates for all equipment anchors. Provide anchor bolts of the size and spacing as required by the equipment manufacturer. All anchor bolts shall be stainless steel Type 316L and of a length capable of adequate anchorage into rough slab-on-grade allowing for finish deck tile and setting bed. Anchors shall be set and cast into place during building concrete work. Inspect all anchor settings for horizontal and vertical alignment prior to placing concrete.

D. The Contractor shall install all equipment and systems in accordance with manufacturer's directions. Equipment shall all be assembled and in place for final observation.

E. All items necessary to complete this section are shown on the plans or described in the specifications including items that may be purchased by the Owner. Items are detailed and specified as a guide for dimensional purposes. The Contractor must make provisions accordingly and submit shop drawings and submittals based on that data.

END OF SECTION 131115

SECTION 131116
SWIMMING POOL UNDERWATER LIGHTS

PART 1 - GENERAL

1.1 COORDINATION AND CLARIFICATION

A. Coordinate with other contractors or subcontractors all work relating to this section.

B. The Contractor must establish with other contractors or subcontractors, having related work in this section, that all work necessary to complete the pool(s) as shown on the drawings and in the specifications is included in the base bid and alternates to the Owner.

C. If in doubt regarding the responsibility for work covered in this section and/or discovery of errors or omissions in the bidding documents, the Contractor shall notify the Architect through channels established by the specifications and request a clarification ten (10) days prior to the bid date.

1.2 PRODUCT DELIVERY, STORAGE, AND HANDLING

A. Deliver material in manufacturer's original, unopened containers and crates with all labels intact and legible.

B. Deliver materials in sufficient time and quantity to allow continuity of work and compliance with approved construction schedule.

C. Handle materials in a manner to prevent damage.

D. Store all materials on clean raised platforms with weather protective coverings. Provide continuous protection of materials against damage or deterioration.

E. Remove damaged materials from site.

1.3 WARRANTIES

A. The Contractor warrants to the Owner and Architect that materials and equipment provided under the contract will be of good quality and new unless otherwise required or permitted by the contract documents, that the work will be free from defects not inherent in the quality required or permitted, and that the work will conform with the requirements of the contract documents. Work not conforming to these requirements, including substitutions not properly approved and authorized will be considered defective. The Contractor’s warranty will exclude remedies for damage or defect caused by abuse, improper or insufficient maintenance, improper operations, modifications not executed by the Contractor or improper wear and tear under normal use. If required by the Architect, the Contractor shall furnish satisfactory evidence as to the kind and quality of materials and equipment. All warranties shall be for a period of one year from the date of substantial completion

or the owner begins using the pool unless otherwise specified.

B. The Contractor shall agree to repair or replace any defective or non-complying work at no cost to the Owner upon written notification from the Owner within the warranty period. Pro-rated warranties are not acceptable.

C. Submit all warranties covering, but not limited to the following:

1. All underwater lightsand accessories against defects in material, manufacturer and installation for a period of one (1) year.

PART 2 - PRODUCTS

2.1 UNDERWATER LIGHTS

A. Underwater lights shall be equivalent to 500 watts of incandescent light. Underwater lights shall be UL listed and in the quantities shown and as detailed in the construction drawings and as described in these specifications. Coordinate for proper installation. Refer to the drawings for quantities and locations.

B. The pool underwater lights shall be 120VAC, 55 watts LED-type, and equivalent to 500 watts of incandescent light. Fixture housing shall be stainless steel construction with minimum wall thickness of 0.020 inch per UL 676 underwater pool lighting standard. Brass construction pressure grounding lug on interior and exterior services. Lens shall be 8-3/8 diameter clear tempered heat resistant glass. Gasket to be single-piece "U" shaped santoprene or silicone. Fasteners shall be silicon-bronze or stainless steel. Cord entrance shall be a watertight seal and epoxy encapsulated.

C. The light fixture shall be supplied with a #16-3 STW (120V) or 12-3 SJTW (12V) submersible cord with ground wire positively grounded inside the fixture. Underwater lights shall be provided with cord length as required to reach appropriate utility pedestal.

D. Underwater lights to be PureWhite LPL-F3W-120 as manufactured by J&J Electronics Inc. or approved equal.

E. Underwater lights shall be equivalent to 500 watts of incandescent light. Underwater lights shall be UL listed and in the quantities shown and as detailed in the construction drawings and as described in these specifications. Coordinate for proper installation. Refer to the drawings for quantities and locations.

F. The light fixture shall be supplied with a #16-3 STW (120V) or 12-3 SJTW (12V) submersible cord with ground wire positively grounded inside the fixture. Underwater lights shall be provided with cord length as required to reach appropriate utility pedestal.

G. (NOTE TO SPECIFIER: LED lights for higher efficiency and longer life.) The pool underwater lights shall be 120VAC or 12VAC, 45/55/70 watts LED-type, and equivalent to 300/400/500 watts of incandescent light. Fixture housing shall be stainless steel construction with minimum wall thickness of 0.020 inch per UL 676

underwater pool lighting standard. Lens shall be 8-3/8 diameter clear tempered heat resistant glass. Gasket to be single-piece "U" shaped santoprene or silicone. Fasteners shall be silicon-bronze or stainless steel. The light fixture shall be supplied with a #16-3 STW (120V) or 12-3 SJTW (12V) submersible cord with ground wire positively grounded inside the fixture. Cord entrance shall be a watertight seal and epoxy encapsulated. Light fixture to be IntelliBrite 5g White LED pool light series by Pentair Commercial Pool and Aquatics or approved equal. Underwater lights shall be provided with cord length as required to allow for deck relamping of all fixtures.

PART 3 - EXECUTION

3.1 EXISTING CONDITIONS, INSPECTION AND PREPARATION

A. Carefully examine all of the contract documents for requirements that affect the work of this section. Prior to starting any work, notify the General Contractor of defects requiring correction. Do not start work until conditions are satisfactory.

B. Verify that all work by others, related to this section, has been completed. This includes all earthwork, concrete work, and mechanical, electrical and plumbing connections.

C. Protect all materials and work completed by others from damage while completing the work in this section.

END OF SECTION 131116

SECTION 131125
SWIMMING POOL CEMENTITIOUS WATERPROOFING

PART 1 - GENERAL

1.1 Description

A. Work in this section. Principal Items include:

1. Application of polymer modified cement waterproofing.
2. Waterproofing swimming pool gutter.
3. Waterproofing main drain sumps.
4. Waterproofing interior of surge tank.

1.2 Submittals

A. Comply with requirements of Shop Drawings, Product Data and Samples Section.

B. Product Data: Manufacturer's specifications, data, and installation instructions.

C. Submit list of project references as documented in this specification under Quality Assurance Article. Include contact name and phone number of the person charged with oversight of each project.

D. Quality Control Submittals:

1. Provide protection plan of surrounding areas and non-work surfaces.

1.3 Quality Assurance:

A. Qualifications:

1. Manufacturer Qualifications: .

   a. :Company shall be ISO 9001:2015 Certified.
   b. Company with minimum 15 years of experience in manufacturing of specified products and systems.

2. Applicator Qualifications: Company with minimum of 5 years' experience in application of specified products and systems on projects of similar size and scope, and is acceptable to product manufacturer.

   a. Minimum of 5 years' experience in application of specified products and systems on projects of similar size and scope, and is acceptable to product manufacturer.
   b. Successful completion of a minimum of 5 projects of similar size and complexity to specified Work.

B. Field Sample:

1. Install field sample at project site or other pre-selected area of building, as directed by Architect/Engineer.
2. Apply material in strict accordance with manufacturer's written application instructions.
3. Manufacturer's representative or designated representative will review technical aspects; surface preparation, application and workmanship.
4. Field sample will be standard for judging workmanship on remainder of project.
5. Maintain field sample during construction for workmanship comparison.
6. Do not alter, move or destroy field sample until work is completed and approved by Architect/Engineer.
7. Obtain Architect/Engineer written approval of field sample before start of material application, including approval of aesthetics, color, texture and appearance.
8. Installer: Trained, certified, and monitored full time for duration of installation by membrane manufacturer.

1.4 Product Delivery and Storage

A. Comply with manufacturer's ordering instructions and lead-time requirements to avoid construction delays.

B. Deliver materials in manufacturer's original, unopened, undamaged containers with identification labels intact.

C. Transport and store in unopened containers and keep in clean, dry condition protected from rain, dew and humidity. If dry onsite storage of bags is unavailable or if project is located in a very wet, humid climate, purchase product in manufacturer's packaged metal pails.

D. Do not stack bags more than two pallets high.

E. Do not allow MasterEmaco® A660 modifying admixture (formerly Acryl 60) to freeze.

1.5 Job Conditions

A. Do not apply in rain or when rain is expected within 24 hours. Do not apply above 90 degrees F (32 degrees C) or below 40 degrees F (4 degrees C) or when temperatures are expected to fall below 40 degrees F (4 degrees C) within 24 hours. For hot and cold temperature applications, store materials and water at 50 degrees F (10 degrees C) to 70 degrees F (21 degrees C) before use.

1.6 Warranty

A. Defects in material, workmanship, and installation of the pool cementitious finish against cracking and delamination for a period of three (3) years.

PART 2 - PRODUCTS

2.1 Materials

A. Waterproof Coating: Sika Thoroseal 581 (Formerly MasterSeal 581) cement based, aggregate type, heavy duty, waterproof coating for concrete or masonry, as manufactured by Master Builders Solutions, or approved equal. Color shall be grey.

1. Bonding and Modifying Mixture: Sika Thoroseal Acryl 60 liquid compound of acrylic polymers and modifiers, as manufactured by Sika Corporation, or approved equal.

B. Water: Clean, fresh, from domestic potable source.

2.2 Proportions and Mixing

A. Materials are specified on a volume basis and shall be measured in approved containers that will ensure that the specified proportions will be controlled and accurately maintained during progress of the work. Measuring materials with shovels ("shovel count") is NOT permitted.

B. Mixing: Perform mixing in approved mechanical mixers of the type in which quantity of water can be controlled accurately and uniformly. Mix to manufacturer's recommendations for swimming pool applications. Discard material which has begun to set before it is used; re-tempering is not allowed. Do not use any caked or lumpy materials. Completely empty mixer and mixing boxes after each batch is mixed and keep free of old material.

PART 3 - EXECUTION

3.1 Preparation of Surfaces

A. Surface Conditions Requirements:

1. Existing surfaces to be coated must be smooth and clean. Sandblast existing concrete (old) surface to remove projections, loose particles, foreign matter or construction debris, and make sufficiently rough to provide a strong mechanical bond to 1/16 in amplitude.
2. New concrete to be rough float finish 1/16 in amplitude chip, sandblast, or grind off all defective materials and foreign matter.

B. Surface Repair Requirements:

1. Repair all cracks with "Waterplug" concrete patch, or approved equal.
2. All areas of loose plaster discovered shall be completely removed down to rough concrete.

C. Preparation:

1. Application of waterproofing constitutes acceptance of substrate. Contractor shall be responsible for properly preparing substrate. Any defects from resulting from substrate issues shall be covered under contractor's warranty.
2. Prior to coating, thoroughly wash entire surface with 2,000 psi high-pressure water.
3. Wet cementitious base surfaces with fine fog water spray to produce a uniformly moist condition.
4. Check gutter grates and accessories for correct alignment before coating is started.
5. Do not apply coating to base surfaces containing frost.
6. Install temporary coverings as required to protect adjoining surfaces from staining or damage by waterproofing operations.

3.2 Application of Waterproofing

A. General: Apply waterproof coating to the manufacturer's minimum thickness at any location. Apply finish coating by manufacturer's approved brushes (do not use a paint brush).

B. Workmanship:

1. Apply waterproof coating in two coats with second coat applied the next day or before material has become too dry or glazed for good bond.
2. Dampen surface immediately ahead of application.
3. Brush on two coats of waterproof coating, each with a minimum thickness as recommended by the manufacturer.
4. Float final brushed on coat with damp sponge 15 minutes after application to provide a smoother finish without waves, cracks, ridges, pits, projections, or other imperfections.
5. Form coating carefully around curves and angles.

C. Curing:

1. Cure waterproof coating with fine water mist spray applied to finish coat three or four times at 8-hour intervals or as drying conditions require to prevent premature drying. Do not fill with water for at least 8 days.

D. Patching and Cleaning up:

1. Upon completion, cut out and patch loose, cracked, damaged, or defective waterproof coating; patches matching existing coating in texture, color, and finish, flush with adjoining coating. Remove waterproof coating droppings or spattering from all surfaces. Leave surfaces in clean unblemished condition ready for pool filling. Remove protective coverings from adjoining surfaces. Remove rubbish and debris from site.

END OF SECTION 131125

SECTION 131140
SWIMMING POOL PLASTER

PART 1 - GENERAL

1.1 REFERENCE

A. Requirements in Addenda, Alternates and Conditions collectively apply to this work.

1.2 DESCRIPTION

A. Principal Work Items Are:

1. Swimming pool plaster finish.
2. Swimming pool start-up and maintenance.

B. Related Work Specified Elsewhere:

1. Section 131100 – Swimming Pool Contractor General Requirements
2. Section 131109 – Swimming Pool Start Up
3. Section 131125 – Swimming Pool Cementitious Waterproofing
4. Section 131145 – Swimming Pool Tile

1.3 SUBMITTALS

A. All submittals shall be made in accordance with the requirements of Division 1 - General Requirements and in strict compliance with the following procedures and guidelines.

B. Procedure: The Contractor shall submit to the Engineer at least four weeks prior to the start of plaster installation the procedure for initial fill and chemical dosing for initial water chemistry balancing.

C. Samples: Prepare 12 in x 12 in square panel at the site showing color and texture for pool plaster. Finished plasterwork shall match the approved sample panel.

D. Certificates: Submit certificates attesting that the materials furnished meet the requirements specified herein.

E. Test Report: Submit results of domestic water analysis.

1.4 PRODUCT DELIVERY AND STORAGE

A. Deliver manufactured materials to site in manufacturers' original unbroken packages or containers bearing manufacturers' name and brand labels. Keep cementitious materials dry until ready to be used and stored off the ground, under cover, and away from damp surfaces.

1.5 JOB CONDITIONS

A. Apply plaster in exterior swimming pool only when ambient temperature is above 40 °F and below 90 °F, and protect applied plaster from rapid drying by sun or wind until curing is completed or pool is filled with water.

B. Do not install plaster during rain. Do not begin plastering is there is a chance of rain within 24hrs of the plastering. If it begins to rain during the plastering process, see section 1.06 "Protecting plaster in unanticipated circumstances".

C. Do not install plaster if the wind conditions are greater than 10 MPH. Do not begin plastering is there is a chance of 10MPH or greater wind within 24hrs of the plastering. If the wind raises above 10MPH during the plastering process, see section 1.06 "Protecting plaster in unanticipated circumstances".

D. Make every effort to apply plaster as late in the construction schedule as possible to avoid staining or damage to the finish.

E. Protect interior plaster applications from construction debris. Stains or damage occurring as a result of inadequate care may result in the rejection of the installation and require complete removal and re-installation at the contractor's expense.

1.6 PROTECTING THE PLASTER DURING UNANTICIPATED WEATHER EVENTS

A. If the weather becomes a threat to the plaster during the plastering process before the plaster has cured, the following steps shall be followed

1. Plaster already placed shall be protected until cured.
2. Plastering shall continue until the plaster abuts tilework. Plastering should then stop until the weather turns favorable. All plasterwork shall be protected until cured.

    a. There shall be no cold joints in the plaster

PART 2 - PRODUCTS

2.1 MATERIALS

A. Portland Cement: ASTM C150, Type I White Portland cement. Manufacturer, Federal Cement.

B. Hydrated Lime: ASTM C206, Type S.

C. Aggregate: Georgia Marble Pool Aggregate, Riverside Premium Pool Aggregate, or approved equal. Mix per manufacturer's recommendations for specific application. If an onsite mix is used, aggregate must be white marble dust uniformly graded within the following limits, all passing the No. 30 sieve:

D. Color: Swimming Pool plaster shall be white in color.

E. Water: Clean, fresh, from domestic potable source, free from injurious amounts of acid, alkali, and organics.

2.2 PROPORTIONS AND MIXING

A. Materials are specified on a volume basis and shall be measured in approved containers that will insure that the specified proportions will be controlled and accurately maintained during the progress of the work. Measuring materials with shovels ("shovel count") is not permitted.

B. White Marble Pool Plaster Finish Coat: Mix finish in proportion of one part by volume of White Portland cement to not more than two parts by volume of sand (specified white marble dust).

C. Mixing: Perform mixing in approved mechanical mixers of the type in which quantity of water can be controlled accurately and uniformly. While mixer is in continuous operation, charge approximately 90% of estimated quantity of water, half of sand, all cement, and the other one-half of the sand into mixer in that sequence and mix thoroughly with remainder of water until mixture is uniform in color and consistency. Avoid excess mixing to prevent hasty solution of cement resulting in accelerated set. Discard plaster which has begun to set before it is used; re-tempering is not allowed. Do not use any caked or lumpy materials. Completely empty mixer and mixing boxes after each batch is mixed and keep free of old plaster.

PART 3 - EXECUTION

3.1 PREPARATION OF SURFACES

A. Removal of existing plaster and tile

1. All surfaces to receive new plaster shall be stripped of all existing finishes, including plaster and tile, by use of hydroblasting, a chipping gun or by picking down to the bare concrete. Expose a clean rough surface to receive new plaster.

B. Clean base surfaces of projections, dust, loose particles, grease, bond breakers, and foreign matter; make sufficiently rough to provide a strong mechanical bond.

1. Do not apply plaster directly to the surfaces of masonry or concrete that is coated with any membrane-forming curing compound or similar agent until compound or agent is completely removed by sandblasting.
2. Thoroughly wash entire surface with 6,000 psi high-pressure water immediately prior to plastering.
3. Wet cementitious base surfaces with a fine fog water spray to produce a uniformly moist condition and check screeds, pool equipment, and accessories for correct alignment before plastering is started.
4. Do not apply plaster to base surfaces containing frost.
5. Install temporary coverings as required to protect adjoining surfaces from staining or damage by plastering operations.

C. External project considerations

1. The pool mechanical equipment shall be operational.
2. The health department and/or other governing agencies shall have approved the pools or spas for plaster.
3. All chemicals required to balance the pool are onsite and ready to be used.
4. All pool related piping have been flushed.
5. Provide initial cleaning of the surge tank and overflow perimeter skimming system (gutter) of all loose debris and sediment.
6. The pool is protected from any cleaning or additional construction work to be completed that may introduce debris into the pool area.

D. The Contractor shall confirm all chemicals necessary for initial pool balance are on site 3 days prior to the start of plaster application.

3.2 APPLICATION OF PLASTER

A. General: Apply finish plaster to minimum 1/2 in thickness at any location. Apply finish plaster by hand or machine. If plastering machine is used, control fluidity of plaster to have a slump not exceeding 2-1/2 in when tested using a 2 in x 4 in x 6 in high slump cone. Do not add additional water to the mix subsequent to determining water content to meet this slump. Perform slump test according to following procedure:

1. Place cone on level, dry, non-absorptive base plate.
2. While holding cone firmly against base plate, fill cone with plaster taken directly from hose or nozzle of plastering machine, tamping with a metal rod during filling to release all air bubbles.
3. Screed off plaster level with top of cone. Remove cone by lifting it straight up with a slow and smooth motion.
4. Place cone in a vertical position adjacent to freed plaster sample using care not to disturb base plate.
5. Lay straightedge across top of cone being careful not to vibrate cone; measure slump in inches from bottom edge of straightedge to the top of slumped plaster sample.

B. Workmanship:

1. Apply finish plaster in two coats by "double-back" method with second coat applied as soon as first coat is tamped and initially floated. Apply plaster with sufficient pressure to provide a good bond on bases.
2. Work plaster to screeds at intervals of from 5 ft to 8 ft, or closer as required on curved surfaces.
3. Finish plaster to tolerance of -0 to +1/8 inch in thickness on curved surfaces and to 1/8 in in 8 feet on straight surfaces.
4. Apply smooth trowel finish without waves, cracks, trowel marks, ridges, pits, crazing, discoloration, projections, or other imperfections. Form plaster carefully around curves and angles, well up to screeds.
5. Take special care to prevent sagging and consequent drooping of applications. Produce surfaces free of visible junction marks in finish coat where one day's work adjoins another.

C. Curing: Cure plaster with fine fog water spray applied to finish coat as frequently as required to prevent dry-out of plaster. Keep plaster damp until pool is filled. Prevent damage or staining of plaster.

D. Patching, Pointing, and Cleaning Up:

1. Upon completion, cut out and patch loose, cracked, damaged, or defective plaster; patches matching existing plaster in texture, color, and finish, flush with adjoining plaster.
2. Perform pointing and patching of surfaces and plasterwork abutting or adjoining any other finish work in a neat and workmanlike manner. If 10% or more of the pools plaster finish is found to be defective, the plaster shall be removed and replaced completely for the entire pool.
3. Remove plaster droppings, voids, holes or spattering from all surfaces. Leave plaster surfaces in clean, unblemished condition ready for pool filling. Remove protective coverings from adjoining surfaces. Remove rubbish and debris from the site.

3.3 START-UP SPECIFICATIONS

A. Contractor shall employ a qualified water testing agency to analyze the domestic water with which the pool will be filled within 2 weeks of the plaster date, and shall employ a swimming pool experienced, water chemistry consultant to determine types and quantities of chemicals required to ensure calcium-balanced water immediately upon the completion of water filling.

1. Have on hand quantities of the chemicals as determined above, plus 25% overage for follow-up treatment. These chemicals, typically including calcium chloride, bicarbonate of soda, and muriatic acid, are in addition to standard chlorine/chlorine products and alkalizer/pH control products required elsewhere.

B. Care shall be taken in filling the pool to assure that the water source is clean and potable and free of contaminants that could stain the fresh plaster. Flush all water lines that have not been in continuous operation before filling the pool.

C. The pool shall not be plastered until the filtration system and chlorination system are complete and ready for start-up.

1. Contractor shall notify the Owner in writing of start-up at least two weeks prior to the plaster date.
2. The Owner is responsible for supplying chlorine/chlorine products and alkalizer/pH control products for maintenance of the pool by the automatic treatment systems.
3. Should these automatic treatment systems fail or if the Contractor fails to notify the Owner as required, the Contractor shall supply all chemicals required for manual treatment of the pool water.

D. Contractor shall maintain swimming pool for a minimum 14 consecutive days in conjunction with the mechanical system operational test.

1. This maintenance period shall be extended with the mechanical system

operational test if required per specifications.

2. During this time, brush the entire pool plaster surface daily starting immediately after filling pool for a minimum of 5 days to remove plaster dust, periodically clean grates until no further accumulation of foreign material occurs, and add chemicals as required for acceptable water quality.
3. The pool shall be vacuumed to maintain a clean and new condition throughout the minimum 14-day period starting no sooner than 5 days after the date of plaster.
4. In no instance, shall the pool maintenance and cleaning responsibilities cease prior to gainful occupancy of the entire facility by the Owner.
5. After successful conclusion of the mechanical system operational testing, clean grates, vacuum pool, and leave the pool ready for use.

E. Clean-Up

1. Before the contractor leaves the site, the site shall be cleaned of all debris created due to the work. The site shall be left in a presentable condition, as determined by the owner or owners representative.

END OF SECTION 131140

SECTION 131145
SWIMMING POOL TRIM TILE

PART 1 - GENERAL

1.1 DESCRIPTION

A. Work in this Section: Principal items include:

1. Ceramic tile for swimming pool.

1.2 QUALITY ASSURANCE

A. Reference Standards: Conform to the following standards unless otherwise required herein:

1. American Concrete Institute

   a. ACI 302 - Guide for Concrete and Floor Slab Construction

2. American National Standards Institute (ANSI):

   a. A108 - Glazed Wall Tile, Ceramic Mosaic Tile, Quarry Tile and Paver Tile Installed With Portland Cement Mortar.
   b. A137.1:2012 Standard Specifications for Ceramic Tile.

3. American Society for Testing and Materials (ASTM):

   a. C150 Portland Cement
   b. C171-16 Sheet Materials for Curing Concrete
   c. C206-14 Finishing Hydrated Lime

4. Tile Council of North America (TCNA): Latest Edition, Handbook for Ceramic Tile Installation.

B. Related Sections

1. 131100 – Swimming Pool Contractor General Requirements
2. 131109 - Swimming Pool Start Up
3. 131125 - Swimming Pool Cementitious Waterproofing
4. 131140 - Swimming Pool Plaster

1.3 SUBMITTALS

A. All submittals shall be made in accordance with the requirements of Division 1 - General Requirements and in strict compliance with the following procedures and guidelines.

B. Product Data:

1. Submit the tile manufacturer's printed data identifying each field tile unit and each trimmer and shaped unit by model or type number.

C. Samples: Submit the following for selection and approval:

1. Each type, shape, and trimmer of tile in each required color.
2. Joint grout colors for each color of tile.
3. Grout colors for Coping

D. Master Grade Certificates: Submit for each lot of tile before installing

1.4 PRODUCT DELIVERY AND STORAGE

A. Deliver tile materials to site in unopened factory containers sealed with Grade Seals bearing printed name of manufacturer and the words "Standard Grade". Keep the Grade Seals intact and containers dry until tiles are used. Keep cementitious materials dry until used.

1.5 JOB CONDITIONS

A. Inspect and verify job conditions. Report all defects in base surfaces to Architect/Engineer for correction before proceeding.

B. Maintain a temperature range of 40 degrees Fahrenheit to 90 degrees Fahrenheit during installation of tile and grout materials. Tile installation should cure for a minimum 14 days with average an temperature of 70 degrees, while maintaining the minimum 40 degrees and maximum 90 degrees Fahrenheit, prior to filling pool with water.

C. Vent temporary heaters to outside to avoid carbon dioxide damage to the new tile work.

1.6 WARRANTIES

A. The Contractor warrants to the Owner that materials and equipment furnished under the contract will be of good quality and new unless otherwise required or permitted by the contract documents, that the work will be free from defects not inherent in the quality required or permitted and that the work will conform to the requirements of the contract documents. Work not conforming to these requirements including substitutions not properly approved and authorized, may be considered defective.

B. The Contractor’s warranty excludes remedy for damage or defect caused by abuse, improper or insufficient maintenance, improper operation, modifications not executed by the Contractor or improper wear and tear under normal usage. If required by the Owner, the Contractor shall furnish satisfactory evidence as to the kind and quality of materials and equipment.

C. All warranties shall be for a period of five years, unless otherwise specified.

D. All setting materials shall be provided by the same manufacturer. All mixing materials and application procedures shall be done in accordance with manufacturer's recommendations and requirements. Documentation shall be provided to this effect by the contractor with verification from the manufacturer. This documentation shall be included in the operations and maintenance manual under warranties as documentation qualifying the project for a [**25 Year**]Lifetime Systems Warranty by Laticrete International, Inc. or approved equal.

E. The Contractor shall agree to repair or replace any work at no cost to the Owner upon written notification from the Owner within the warranty period. Pro-rated warranties are not acceptable.

PART 2 - PRODUCTS

2.1 BASIC MATERIALS

A. Portland Cement: ASTM C150, Type II, low alkali

B. Hydrated Lime: ASTM C207, Type S.

C. Mortar sand: ASTM C144, at least 4% passing No. 100 sieve.

D. Joint sand: Same as mortar sand, except all passing the No. 30 sieve.

E. Water: From domestic potable source

F. Color pigments: Pure ground mineral oxides, non-fading, alkali and lime proof, factory weighed and packaged.

2.2 TILE MATERIALS

A. Manufacturer

1. Tile Products: Dal Tile, American Olean, Cepac, Agrob Buchtal or approved equal.

B. Standard Grade conforming to ANSI A137.1. Additional Tile Requirements include:

1. Provide trim units as indicated and specified, including special shapes as detailed or required.
2. Tile patterns and colors shall be as indicated and specified, colors of approved shades.
3. Mesh mounted or perforated paper backed tile is not allowed where the mesh of paper remains as a permanent part of the installation. If dot mounting is used, a minimum of 67% of the depth of the tile shall be free from any dots to ensure proper grout curing.
4. All 1" x 1" tiles shall be face mounted as guaranteed suitable for pool use by the manufacturer.

5. Use factory-made half-size units where required for tile numbers, or make the half-size units by precision cutting on powered tile saw.
6. Ease all cut tile edges prior to installation.

C. Glazed Ceramic Tile – See Drawings for location, quantity, and size.

1. Gutter Cap Tile
2. Water Line Tile

D. Unglazed Ceramic Mosaic Tile

1. "NO DIVING" Warning Tile
2. Depth Marking Tile
3. Stair Entry Tile
4. Stair Nosing Tile – Daltile Keystones 1"x1" Cap Wall Tile
5. Main Drain Trim Tile
6. Floor Inlet Trim Tile
7. Lane Marking tile
8. Wall TargetTile
9. Recessed Step Trim Tile

E. Specialty Tile:

1. Handhold tile at pool perimeter shall have color selected by Architect and be provided as C701 available from Dal Tile or approved equal.

F. Trim Units: Provide tile trim units where indicated or necessary for complete and finished installation. Provide bullnose units for external corners and angles. Internal corners shall be squared. External corners shall be mitered. Provide trim units of material and finish identical to adjoining tile, except slip-resistant surfacing is not required for curved or vertical trim units. Provide special type slip-resistant tread nosing units as indicated.

2.3 SETTING BED MORTAR

A. Manufacturer: LATICRETE International Inc., 3701 Fortified Mortar Bed, thick bed mortar. Polymer fortified blend of carefully selected polymers, Portland cement and graded aggregates. Exceeds ASTM C270 Requirements. Mix and Apply in accordance with Manufacturer's recommendations.

1. Tile Setting Products: LATICRETE International Inc., Mapei Corporation or approved equal.

2.4 BOND COAT

A. Manufacturer: LATICRETE International Inc., 254 Platinum one step, polymer-fortified thin-set mortar. Exceeds ANSI A118.4 Shear Bond Strength Requirements & ANSI A118.15 (ISO 13007 C2TES1). Mix and apply in accordance with Manufacturer's recommendations as a Bond Coat (placed under setting bed mortar screeds at 'horizontal surfaces').

2.5 THINSET

A. Manufacturer: LATICRETE International Inc., 254 Platinum one step, polymer-fortified thin-set mortar. Exceeds ANSI A118.4 Shear Bond Strength Requirements & ANSI A118.15 (ISO 13007 C2TES1). Mix and apply in accordance with Manufacturer's recommendations.

2.6 TILE JOINT GROUT

A. Manufacturer: LATICRETE International Inc., [**PermaColor Grout. Exceeds ANSI A118.7 (ISO 13007-3 CG2WA) requirements**]Spectra Lock Pro Premium Grout Exceeds ANSI A118.3 (ISO 13007-3 RG), patented high performance grout. Mix and Apply in accordance with Manufacturer's recommendations.

B. Plaster Finish: See Specification 131140.

2.7 MIXING AND APPLICATION PROCEDURES

A. All mixing and application procedures shall be done in accordance with the manufacturer's recommendations, requirements, and guidelines. A manufacturer's representative shall visit the site to verify field conditions, confirm materials and application requirements, and confirm that all materials and systems are installed per the manufacturer's recommendations, requirements, and guidelines. Documentation shall be provided to this effect for the Design Team's records.

PART 3 - EXECUTION

3.1 PREPARATION

A. The Swimming Pool surface shall be structurally sound and free of any foreign substances and debris that could reduce or impair adhesion. Sound and remove all loose concrete to firm substrate. Clean substrates of dust, dirt, oil, grease, and deleterious substances. Conform to applicable Reference Standards and to recommendations of manufacturers of materials used. Thoroughly wash/rinse with clean potable water.

B. Surface defects or holes in the substrate shall be patched per manufacturer's recommendations.

C. Substrates To Receive Mortar Setting Beds: Keep cementitious backing damp for at least 8 hours and scrub with a neat Portland cement slurry just prior to placing setting bed mortar.

D. Tile Wetting: Dampen tile according to above Reference Standards or tile manufacturer's instructions, as required.

E. Screeds: Accurately set temporary screeds to control the finish plane of mortar-bed set tile and remove as soon as setting bed is sufficiently hardened. Fill void spaces from screeds with same mortar.

3.2 TILE INSTALLATION

A. Arrange tile according to patterns detailed, set tile flush with well-fitted joints, finish in true planes, that are plumb and square, and with joints of uniform size. Provide approved trimmers as shown or required. Cut tile without marring. Carefully grind and joint tile edges and cuts. Set tiles to avoid puddles and ponding in large fields and arrange curved field joints at radiuses that minimize joints and tapered grout joints.

B. Mortar Bed Set Tile: Apply bond coat under dry pack screed mortars at horizontal surfaces (vertical renders / leveling mortars are mixed to a more plastic / plaster like consistency and typically do not require a bond coat). While bond coat remains wet and tacky, apply specified setting bed mortar, tamp, and screed to required planes. Spread no more mortar than can be covered with tile before initial set. Do not use re-tempered mortar. Trowel 1/32" to 1/16" thick bond coat over plastic setting bed mortar just before setting tile or apply bond coat to back of each tile placed. Set tile in position and beat firmly into the setting bed mortar. Bring tile faces to a true and proper plane. Complete all beating and leveling before mortar sets and in no case later than one hour after first placing. When ready, wet and remove paper and glue avoiding excess water. Adjust any out-of-line or out-of-level tile.

C. Ceramic Tile Joint Grouting:

1. For tile 3 inches below waterline and above: Grout tile joints full after washing out and saturating with clean water. Mix grout with water to a thick creamy consistency and force into joints for entire joint depth, flush with surface. Clean off all excess and fill skips and gaps before grout sets. Use white grout throughout. Provide dampness for minimum 3-day curing and polish with clean dry cloths. Unless otherwise approved, install tile with uniform 3/32 inch joint width. A maximum 1/8" joint width may be utilized to meet specific installation requirements, if required.
2. For tile at least 3 inches below waterline: Grout tile joints full after washing out and saturating with clean water with plaster finish. See specification 131140.

D. Tile Expansion Joints: Install tile with uniform 1/8" joint width. Place expansion joint per applicable TCNA Method P601MB, P601TB, or P602 and conforming to Method EJ171. Provide shop drawings showing backer rod and joint dimensions. All expansion, control, construction, cold, and seismic joints in the pool structure should continue through the tile work, including such joints at vertical surfaces. Movement joints shall be placed at all changes in direction and elevation. Refer to the structural engineer for additional required movement joints. Joint size shall be a minimum of 1/8”. Joints through tile work directly over structural joints shall not be narrower than the structural joint. The Contractor shall use cement compatible coatings when using chalk lines for joint layout purposes.

3.3 CLEANING AND PROTECTION

A. Remove stains, cement, grout, and foreign matter after grouted joints are fully set as recommended by TCNA and manufacturers of proprietary materials. Do not use any acid for cleaning free of both sodium and potassium. Repair all defective joints

until approved.

B. Protect installed tile work with non-staining Kraft paper, polyethylene sheeting, or other approved heavy covering during the construction period to prevent damage.

3.4 TESTING AND INSPECTION

A. Before filling of the pool, and its subsequent provisional acceptance at substantial completion, the tile installation shall be visually inspected and sounded in the presence of the Architects and/or the Owner's representative to verify adhesion of the tile to its substrate as well as its overall compliance with the requirements of this Section. Any and all tile work found to be loose, improperly adhered, out of plane, misaligned or otherwise non-conforming shall be removed and replaced at no additional cost to the Owner.

3.5 REPLACEMENT TILE

A. Provide Owner with approximately 10% or 25 square feet (whichever is least) of each color and type tile used on the project for Owner's repair and replacement requirements.

END OF SECTION 131145

TAMALPAIS HIGH SCHOOL

SWIMMING POOL REPLASTER
700 MILLER AVE.
MILL VALLEY, CALIFORNIA 94941

ABBREVIATION LEGEND

@	AT	MIN	MINIMUM
Ø	DIAMETER	MISC	MISCELLANEOUS
℄	CENTER LINE	N	NEW
ADA	ACCESSIBLE	NA	NOT APPLICABLE
AGG	AGGREGATE	NIC	NOT IN CONTRACT
ALT	ALTERNATE	NTS	NOT TO SCALE
BLDG	BUILDING	O.C.	ON CENTER
CCR	CALIFORNIA CODE OF REGULATIONS	O.C.E.W.	ON CENTER EACH WAY
CJ	CONTROL JOINT	PERF	PERFORATED
CLR	CLEARANCE	PNL	PANEL
CNTR	CENTER	POC	POINT OF CONNECTION
CONC	CONCRETE	PSF	POUNDS PER SQUARE FEET
CONT	CONTINUOUS	PSI	POUNDS PER SQUARE INCHES
DEMO	DEMOLISH	PVC	POLYVINYL CHLORIDE
DIM	DIMENSION	R	RADIUS
DWG	DRAWING	REF	REFERENCE
E	EXISTING	REINF	REINFORCEMENT
E.W.	EACH WAY	REQ'D	REQUIRED
EJ	EXPANSION JOINT	REV	REVISION
ELEC	ELECTRICAL	S.A.D.	SEE ARCHITECTURAL DETAILS
EMBED	EMBEDMENT	SCH	SCHEDULE
EQ	EQUAL	SHT	SHEET
FD	FLOOR DRAIN	SIM	SIMILAR
GAL	GALVANIZED	SQ	SQUARE
GPM	GALLONS PER MINUTE	SS	STAINLESS STEEL
HB	HOSE BIB	T&B	TOP AND BOTTOM
HORIZ	HORIZONTAL	THK	THICKNESS
IFC	INTERNATIONAL FIRE CODE	TRANS	TRANSVERSE
JB	JUNCTION BOX	TYP	TYPICAL
LONG	LONGITUDINAL	U.N.O.	UNLESS NOTED OTHERWISE
MAX	MAXIMUM	VERT	VERTICAL
MFG	MANUFACTURER	W/	WITH

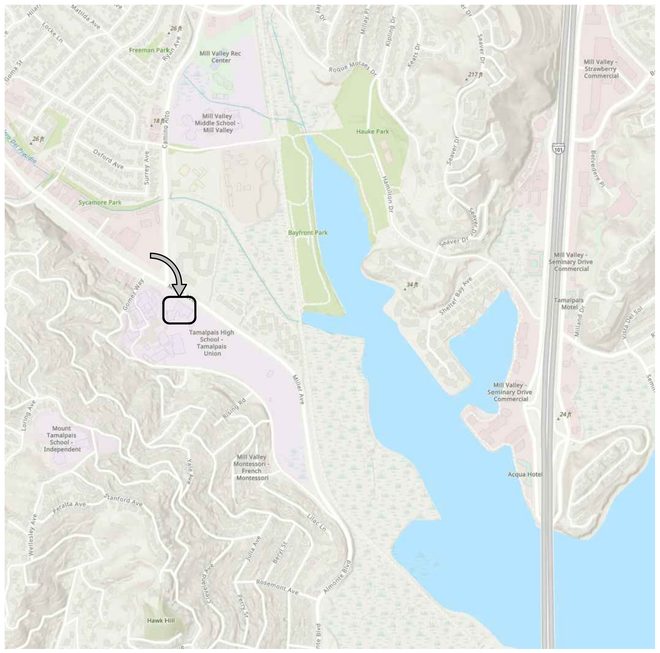

VICINITY MAP (2)

SITE MAP (1)

PROJECT DESCRIPTION:
1. SWIMMING POOL REPLASTER AND RETILE.

CODES & REGULATIONS:
1. CONSTRUCTION SHALL CONFORM TO THE FOLLOWING CODES & REGULATIONS:
   - CALIFORNIA BUILDING CODE (C.B.C.), 2022 EDITION
   - INTERNATIONAL BUILDING CODE (I.B.C.), 2021 EDITION
   - CALIFORNIA ELECTRICAL CODE (N.E.C.), 2022 EDITION
   - CALIFORNIA MECHANICAL CODE (C.M.C.), 2022 EDITION
   - CALIFORNIA PLUMBING CODE (C.P.C.), 2022 EDITION
   - CALIFORNIA GREEN BUILDING STANDARDS, 2022 EDITION
   - CALIFORNIA FIRE CODE, 2022 EDITION
   - CALIFORNIA CODE OF REGULATIONS (C.C.R.) TITLE 24, 2022 EDITION
   - ENERGY EFFICIENCY STANDARDS, 2022 EDITION
   - ALL APPLICABLE LOCAL LAWS AND CODES
2. ADDITIONAL REQUIREMENTS
   - SAFETY DURING CONSTRUCTION SHALL COMPLY WITH CFC CHAPTER 14.
   - SWIMMING POOL SHALL COMPLY WITH ALL LOCAL HEALTH DEPARTMENT REQUIREMENTS
   - GRADING PLANS, DRAINAGE IMPROVEMENTS, ROAD AND ACCESS REQUIREMENTS, AND ENVIRONMENTAL HEALTH CONSIDERATIONS SHALL COMPLY WITH ALL LOCAL ORDINANCES

GENERAL NOTES:
1. ALL WORK SHALL CONFORM TO CBC 2022 EDITION AND ALL AMENDMENTS THERETO BY THE LOCAL AUTHORITIES, ESPECIALLY CBC AMENDMENTS.
2. INTERPRETATION OF DRAWINGS & SPECIFICATIONS
   A. FOR CONVENIENCE, SPECIFICATIONS HAVE BEEN PREPARED FOR THIS PROJECT AND ARE ARRANGED IN SEVERAL SECTIONS, BUT SUCH SEPARATION SHALL NOT BE CONSIDERED AS THE LIMITS OF THE WORK REQUIRED OF ANY SEPARATE TRADE. THE TERMS AND CONDITIONS OF SUCH LIMITATIONS ARE WHOLLY BETWEEN THE CONTRACTOR AND THEIR SUBCONTRACTORS.
   B. IN GENERAL, THE WORKING DETAILS WILL INDICATE DIMENSIONS, POSITION AND KIND OF CONSTRUCTION, AND THE SPECIFICATIONS, QUALITIES AND METHODS. ANY WORK INDICATED ON THE WORKING DETAILS AND NOT MENTIONED IN THE SPECIFICATION, OR VICE VERSA, SHALL BE FURNISHED AS THOUGH FULLY SET FORTH IN BOTH. WORK NOT PARTICULARLY DETAILED, MARKED OR SPECIFIED, SHALL BE THE SAME AS SIMILAR PARTS THAT ARE DETAILED, MARKED OR SPECIFIED. IF CONFLICTS OCCUR ON DRAWINGS AND/OR SPECIFICATIONS, THE ENGINEER SHALL BE NOTIFIED IMMEDIATELY.
   C. SHOULD AN ERROR APPEAR IN THE WORKING DETAILS OR SPECIFICATIONS OR IN WORK DONE BY OTHERS AFFECTING THIS WORK, THE CONTRACTOR SHALL NOTIFY THE ENGINEER/ARCHITECT AT ONCE AND IN WRITING. IF THE CONTRACTOR PROCEEDS WITH THE WORK SO AFFECTED WITHOUT HAVING GIVEN SUCH WRITTEN NOTICE AND WITHOUT RECEIVING THE NECESSARY APPROVAL, DECISION OR INSTRUCTIONS IN WRITING FROM THE OWNER, THEN THEY SHALL HAVE NO VALID CLAIM AGAINST THE OWNER, FOR THE COST OF SO PROCEEDING AND SHALL MAKE GOOD ANY RESULTING DAMAGE OR DEFECT. NO VERBAL APPROVAL, DECISION, OR INSTRUCTION SHALL BE VALID OR BE THE BASIS FOR ANY CLAIM AGAINST THE OWNER, ITS OFFICERS, EMPLOYEES OR AGENTS. THE FOREGOING INCLUDES TYPICAL ERRORS IN THE SPECIFICATIONS OR NOTATIONAL ERRORS IN THE WORKING DETAILS WHERE THE INTERPRETATION IS DOUBTFUL OR WHERE THE ERROR IS SUFFICIENTLY APPARENT AS TO PLACE A REASONABLY PRUDENT CONTRACTOR ON NOTICE THAT, SHOULD THEY ELECT TO PROCEED, THEY IS DOING SO AT THEIR OWN RISK.
3. THE CONTRACTOR SHALL NOTIFY THE ENGINEER WHERE A CONFLICT OR DISCREPANCY OCCURS BETWEEN THE DESIGN DRAWINGS AND ANY OTHER PORTION OF THE CONTRACT DOCUMENTS OR EXISTING FIELD CONDITIONS. SUCH NOTIFICATION SHALL BE GIVEN IN DUE TIME SO AS NOT TO AFFECT THE CONSTRUCTION SCHEDULE.
4. IN CASE OF A CONFLICT BETWEEN DESIGN DRAWINGS AND SPECIFICATIONS THE MORE RESTRICTIVE CONDITION SHALL TAKE PRECEDENCE UNLESS WRITTEN APPROVAL HAS BEEN GIVEN FOR THE LEAST RESTRICTIVE.
5. CONTRACTOR SHALL VERIFY ALL DIMENSIONS WITH PROJECT DOCUMENTS PRIOR TO COMMENCING ANY WORK.
6. WHERE NO SPECIFIC DETAIL IS SHOWN, THE CONSTRUCTION SHALL BE IDENTICAL OR SIMILAR TO THAT INDICATED FOR LIKE CASES OF CONSTRUCTION ON THIS PROJECT. SHOULD THERE BE ANY QUESTION, CONTACT THE ARCHITECT AND ENGINEER PRIOR TO PROCEEDING.
7. ANY SUBSTITUTIONS OR ALTERNATE DETAILS SHALL BE REVIEWED BY THE ARCHITECT/ENGINEER. SUCH REVIEW WILL REQUIRE A TIME AND MATERIALS CONTRACT TO BE SET UP WITH THE GENERAL CONTRACTOR WITH NO GUARANTEE THAT THE SUBSTITUTION WILL BE ALLOWED.
8. DO NOT SCALE DRAWINGS. CONTACT THE ARCHITECT OR ENGINEER FOR ANY DIMENSIONS NOT SHOWN.
9. VERIFY EXACT LOCATIONS AND SIZES OF HOLES IN FLOOR, AND ROOF FOR PLUMBING, HVAC, AND ELECTRICAL WITH RESPECTIVE CONTRACTORS AND SUB-CONTRACTORS.
10. THE UNDERGROUND SERVICES AND UTILITIES SHOWN ON THE DRAWINGS REFLECT BEST AVAILABLE INFORMATION, HOWEVER, EXACT LOCATIONS FOR EACH SHALL BE VERIFIED IN THE FIELD BY THE CONTRACTOR BEFORE EXCAVATING, THE CONTRACTOR SHALL TAKE ALL PRECAUTIONS NECESSARY TO LOCATE AND PROTECT ANY UNDERGROUND OR CONCEALED CONDUIT, PLUMBING, OR OTHER UTILITIES WHERE NEW WORK IS BEING PERFORMED.
11. GENERAL CONTRACTOR SHALL BE RESPONSIBLE FOR ALL SCHEDULING, COORDINATION MEANS AND METHODS.
12. CARE MUST BE TAKEN BY ALL TRADES TO COORDINATE LOCATIONS OF UNDERGROUND PIPING AND CONDUITS TO ASSURE NO CONFLICTS. ALL PIPING SHOWN HEREIN IS DIAGRAMMATIC IN NATURE UNLESS OTHERWISE NOTED.

SAFETY NOTES:
1. IT IS THE CONTRACTORS RESPONSIBILITY TO COMPLY WITH THE PERTINENT SECTIONS, AS THEY APPLY TO THIS PROJECT, OF THE "CONSTRUCTION SAFETY ORDERS" ISSUED BY THE STATE OF CALIFORNIA LATEST EDITION, AND ALL OSHA REQUIREMENTS.
2. THE OWNER AND THE STRUCTURAL ENGINEER DO NOT ACCEPT ANY RESPONSIBILITY FOR THE CONTRACTOR'S FAILURE TO COMPLY WITH THESE REQUIREMENTS.
3. THE CONTRACTOR SHALL BE RESPONSIBLE FOR ADEQUATE DESIGN AND CONSTRUCTION OF ALL FORMS AND SHORING REQUIRED.

SHEET INDEX

SHEET NO.	SHEET TITLE
T0.0	COVER SHEET, DESIGN DATA & SHEET INDEX
D0.0	SWIMMING POOL SITE DEMOLITION PLAN
D1.0	SWIMMING POOL DEMOLITION PLAN
SP0.0	SWIMMING POOL SITE PLAN
SP1.0	SWIMMING POOL LAYOUT PLAN
SP1.1	SWIMMING POOL SECTIONS
SP1.2	SWIMMING POOL FINISH DETAILS
SP1.3	SWIMMING POOL FINISH DETAILS

RSM
Design | Engineering
ROGERS STRINGER MCCLELLAND
1981 N. BROADWAY, SUITE 202
WALNUT CREEK, CA 94596
PH. (925) 217-6619
www.rsm-de.com

COVER SHEET, DESIGN DATA & SHEET INDEX

TAMALPAIS HIGH SCHOOL
SWIMMING POOL REPLASTER
700 MILLER AVE.
MILL VALLEY, CALIFORNIA 94941

REV	DATE	DESCRIPTION
1		
2		
3		
4		
5		
6		
7		
8		
9		
10		
11		
12		
13		
14		

CONSTRUCTION DOCUMENTS

REGISTERED PROFESSIONAL ENGINEER
DANIEL P. STRINGER
No. 53888
CIVIL
STATE OF CALIFORNIA

PROJECT NO:	059.2501
SCALE:	AS NOTED
DATE:	FEBRUARY 04, 2026
DRAWN:	R. DINELLI
REVIEWED:	D. STRINGER
APRROVED:	D. STRINGER

T0.0

Copyright © 2026 RSM, Inc.-All Rights Reserved-This document was prepared for use only by the client, only for the purposes stated, and within a reasonable time from issuance. Non-commercial, educational, and scientific use of this document by regulatory agencies is regarded as a "fair use" and not a violation of copyright. Regulatory agencies may make additional copies of this document for internal use. Copies may also be made available to the public as required by law. The reprint must acknowledge the copyright and indicate that permission to reprint has been received.

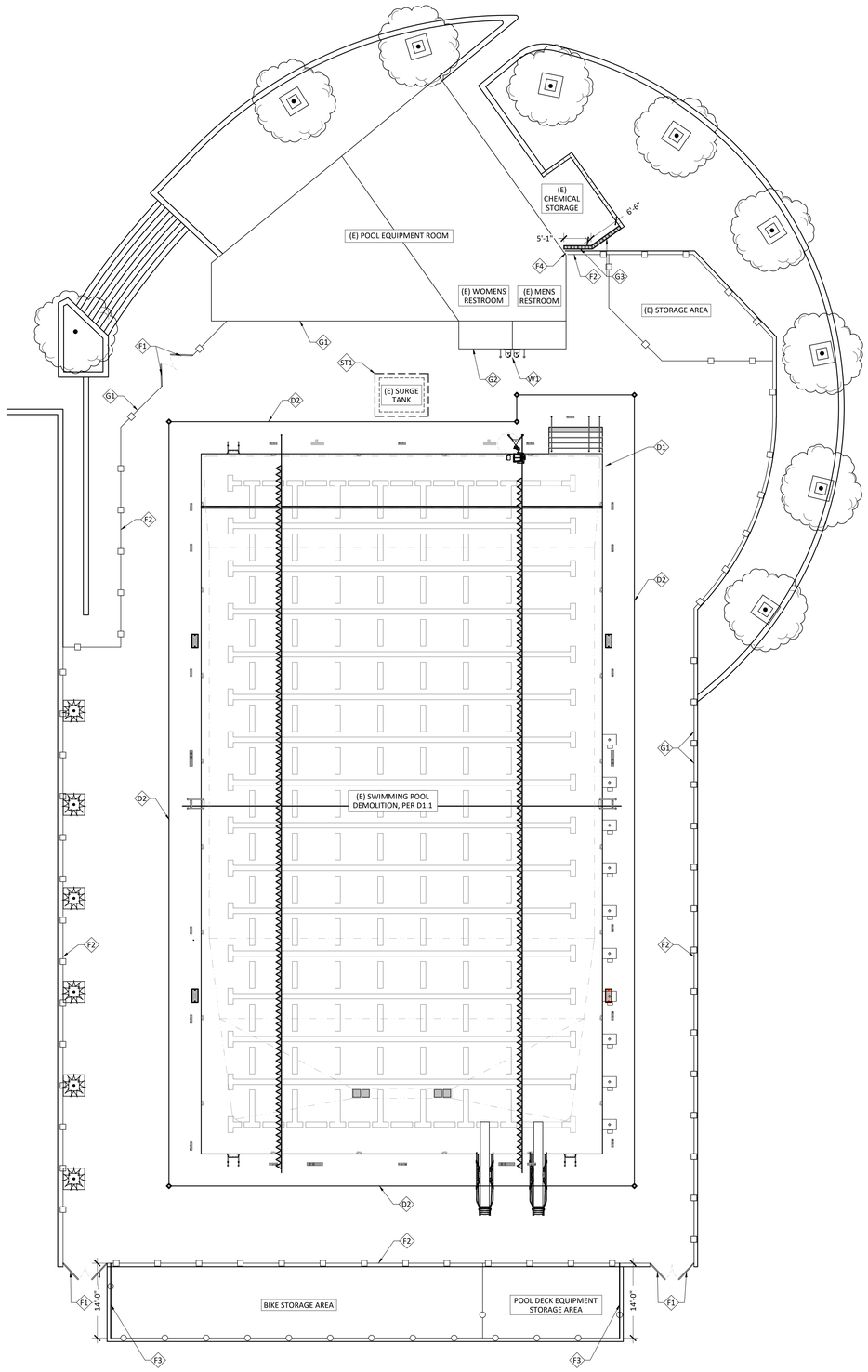

SWIMMING POOL SITE DEMOLITION PLAN

3/32" = 1'-0" (1)

DEMOLITION NOTES:

1. ANY CONDITION NOT SPECIFICALLY COVERED IN THIS PLAN OR UNUSUAL CONDITIONS ENCOUNTERED DURING DEMOLITION SHALL BE BROUGHT TO THE ATTENTION OF THE ENGINEER BEFORE PROCEEDING.
2. THE CONTRACTOR IS RESPONSIBLE FOR ESTIMATIONS THAT TAKES INTO REGARD DEMOLITION PREPARATION, AS WELL AS MEANS AND METHODS OF DEMOLITION. CONTRACTOR SHALL VISIT THE SITE AS REQUIRED TO ACCOMPLISH THE WORK, AND TO BECOME FAMILIAR WITH SCOPE AND SERVICES OF WORK REQUIRED.
3. CONTRACTOR SHALL BE RESPONSIBLE FOR PROTECTING EXISTING BUILDING AND SITE IMPROVEMENTS FROM DEMOLITION EQUIPMENT AND DEBRIS. ANY DAMAGE TO THE BUILDING ASSUMED TO BE FROM DEMOLITION SHALL BE REPAIRED AT CONTRACTOR'S EXPENSE.
4. CONTRACTOR SHALL BE RESPONSIBLE FOR PROTECTING ALL SITE MECHANICAL, ELECTRICAL, AND PLUMBING DURING DEMOLITION. ITEMS INCLUDED BUT ARE NOT LIMITED TO ANY HOSE BIBBS, DRINKING FOUNTAINS, ELECTRICAL CONDUIT, SITE ELECTRICAL, AND BURIED PIPING NOT CALLED OUT FOR DEMOLITION ON PLANS. CONTRACTOR TO VERIFY WITH AS-BUILTS AND SITE CONDITIONS FOR EXISTING CONDITIONS OF SITE. ENGINEER NOT RESPONSIBLE FOR ANY ITEMS FOUND IN THE FIELD NOT SHOWN ON THIS DOCUMENT.
5. CONTRACTOR SHALL BE RESPONSIBLE FOR PROTECTING OWNER-OCCUPIED BUILDINGS FROM NOISE, DUST, AND ANY OTHER CONSTRUCTION DANGERS.
6. THE CONTRACTOR SHALL COORDINATE DEMOLITION WITH OTHER TRADES AND SHALL PROTECT ALL EXISTING WORK, EQUIPMENT, PIPING, FITTINGS, ETC. THROUGHOUT THE CONTRACT.
7. ALL DEMOLISHED DEBRIS AND EQUIPMENT IS TO BE REMOVED FROM THE SITE AND DISPOSED OF BY THE CONTRACTOR (UNLESS NOTED OTHERWISE) AS REQUIRED BY LOCAL & STATE REGULATIONS.
8. CARE IS TO BE TAKEN TO CAP OFF POOL SYSTEMS WHERE NECESSARY.
9. IF REQUIRED BY THE LOCAL SANITARY DISTRICT, IT IS THE CONTRACTOR'S RESPONSIBILITY TO NEUTRALIZE POOL WATER TO 0.0 CHLORINE LEVEL AND DRAIN WITH PERMISSION OF THE LOCAL GOVERNING AGENCIES. CONTRACTOR TO PERFORM CHLORINE NEUTRALIZATION TEST. INSPECTOR OF RECORD TO CONFIRM TEST HAS BEEN COMPLETED PRIOR TO DISCHARGE.

WATERPROOFING DEMOLITION NOTES:

1. CONTRACTOR TO PREPARE ALL SURFACES FOR WATERPROOFING PER WATERPROOFING MANUFACTURERS REQUIREMENTS.
2. CONTRACTOR TO SUPPLY ENGINEER WITH PROCESS FOR SURFACE PREP AND WATERPROOFING MATERIAL SUBMITTALS AT START OF DEMOLITION.

SWIMMING POOL SITE DEMOLITION KEYNOTES:

DECK
D1. (E) DECK CRACKING BETWEEN THE DECK EDGE AND THE SLOT DRAIN TO BE PREPPED AND SEALED WITH SIKA-FLEX SELF-LEVELING SEALANT, COLOR TO MATCH DECK. APPROXIMATE EXTENTS 500 LF.
D2. (E) SLOT DRAIN TO BE PRESSURE WASHED AND FLUSHED.

SURGE TANK
ST1. INTERIOR WATERPROOFING TO BE REMOVED AND SURFACE TO BE PREPARED FOR NEW WATERPROOFING.

FENCING AND GATES
F1. (E) GATES TO REMAIN.
F2. (E) FENCE AND FENCE POST FOOTINGS TO REMAIN.
F3. (E) FENCING TO RECEIVE A SCREEN TO MATCH FACILITY STANDARD, APPROXIMATE EXTENTS 30 LF, V.I.F.
F4. GAP BETWEEN FENCE AND BUILDING TO BE CLOSED TO 4" MAXIMUM PER DETAIL 3/D0.0.

WATER FOUNTAINS
W1. (E) WATER FOUNTAINS TO REMAIN.

GENERAL EQUIPMENT
G1. (E) POOL SIGNAGE TO BE DEMOLISHED.
G2. (E) EMERGENCY PHONE TO REMAIN.
G3. (E) CMU WALL TO BE PARTIALLY DEMOLISHED PER DETAIL 2/D0.0

POOL DECK PLAN LEGEND

SYMBOL/LINE	DESCRIPTION
————	(E) 6" SLOT DRAIN
◇	(E) CATCH BASIN

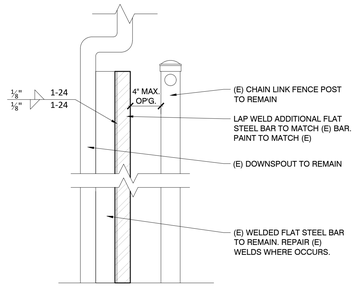

FENCE INFILL DETAIL

1-1/2" = 1'-0" (3)

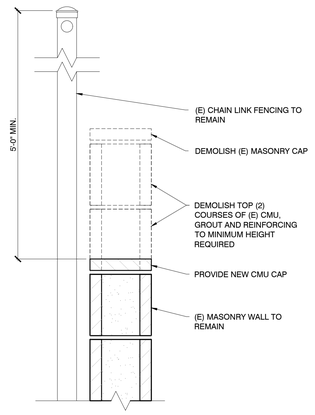

MASONRY WALL DETAIL

1-1/2" = 1'-0" (2)

RSM
Design | Engineering
ROGERS STRINGER MCCLELLAND
1981 N. BROADWAY, SUITE 202
WALNUT CREEK, CA 94596
PH. (925) 217-6619
www.rsm-de.com

SWIMMING POOL SITE DEMOLITION PLAN

TAMALPAIS HIGH SCHOOL
SWIMMING POOL REPLASTER
700 MILLER AVE.
MILL VALLEY, CALIFORNIA 94941

REV	DATE	DESCRIPTION
1		
2		
3		
4		
5		
6		
7		
8		
9		
10		
11		
12		
13		
14		

CONSTRUCTION DOCUMENTS

REGISTERED PROFESSIONAL ENGINEER
DANIEL P. STRINGER
No. 33897
CIVIL
STATE OF CALIFORNIA

PROJECT NO:	059.2501
SCALE:	AS NOTED
DATE:	FEBRUARY 04, 2026
DRAWN:	R. DINELLI
REVIEWED:	D. STRINGER
APRROVED:	D. STRINGER

D0.0

Copyright © 2026 RSM, Inc.-All Rights Reserved-This document was prepared for use only by the client, only for the purposes stated, and within a reasonable time from issuance. Non-commercial, educational, and scientific use of this document by regulatory agencies is regarded as a "fair use" and not a violation of copyright. Regulatory agencies may make additional copies of this document for internal use. Copies may also be made available to the public as required by law. The reprint must acknowledge the copyright and indicate that permission to reprint has been received.

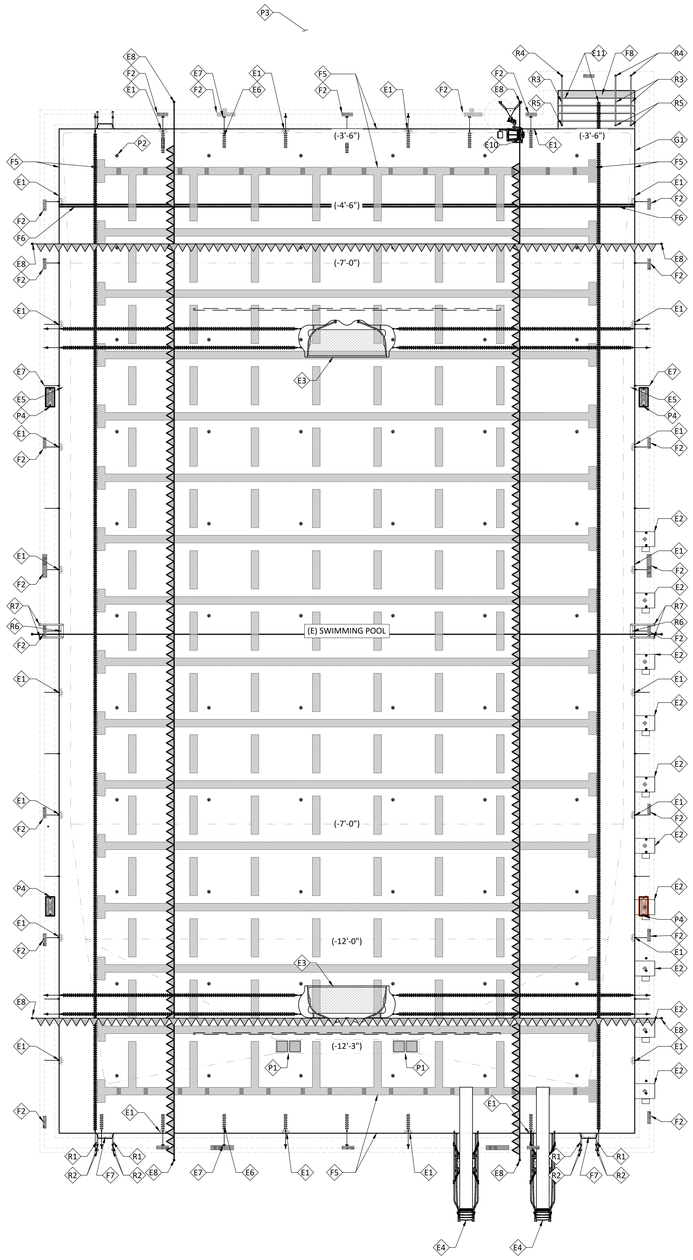

SWIMMING POOL DEMOLITION PLAN
1/8" = 1'-0"
1

SWIMMING POOL DEMOLITION KEYNOTES:

GENERAL
G1. (E) POOL SHELL TO REMAIN. REMOVE (E) PLASTER FINISH DOWN TO BARE CONCRETE.
G2. (E) GUTTER WATERPROOFING TO BE REMOVED AND SUBSTRATE PREPARED FOR NEW WATERPROOFING.

FINISHES
F1. (E) WATERLINE TILE AND SETTING MATERIALS TO BE DEMOLISHED.
F2. (E) DECK AND CANTILEVER DEPTH MARKERS, NO DIVING MARKERS AND NO RUNNING MARKERS TO BE REMOVED, TYP.
F3. (E) GUTTER NOSING TILE TO BE DEMOLISHED. (E) STAINLESS STEEL GUTTER LIP BONDING TO BE PRESERVED FOR RECONNECTION, WHERE OCCURS.
F4. (E) STEP NOSING TILE TO BE DEMOLISHED.
F5. (E) FLOOR LANE MARKERS, WALL AND DECK TARGETS TO BE DEMOLISHED, TYP.
F6. (E) DEPTH TRANSITION TILE TO BE DEMOLISHED.
F7. (E) RECESSED STEP INSERT TO BE DEMOLISHED, TYP.
F8. (E) TOP STEP TILE TO BE DEMOLISHED.

RAILS
R1. (E) GRAB RAILS & ESCUTCHEONS TO BE REMOVED, POLISHED, AND REINSTALLED, TYP.
R2. (E) GRAB RAIL ANCHOR TO REMAIN, TYP.
R3. (E) POOL STAIR HANDRAIL & ESCUTCHEONS TO BE DEMOLISHED, TYP.
R4. (E) POOL STAIR HANDRAIL ANCHOR TO REMAIN, TYP.
R5. (E) POOL STAIR HANDRAIL ANCHOR TO BE CHIPPED OUT AND REMOVED PER 3/D1.0.
R6. (E) POOL LADDER TO BE REMOVED, POLISHED AND REINSTALLED, TYP.
R7. (E) LADDER ANCHOR TO REMAIN.

POOL EQUIPMENT
E1. (E) UNDERWATER LIGHT TO BE DEMOLISHED, LIGHT NICHE TO REMAIN, TYP.
E2. (E) STARTING PLATFORMS TO BE REMOVED BY OWNER.
E3. (E) WATER POLO GOALS TO BE REMOVED BY OWNER.
E4. (E) 1M DIVE STAND TO REMAIN.
E5. (E) SHORT COURSE LANE LINE DIVIDERS TO BE DEMOLISHED
E6. (E) LONG COURSE LANE LINE DIVIDERS TO BE REMOVED BY THE OWNER AND REMAIN.
E7. (E) LANE LINE ANCHORS TO REMAIN. TYP.
E8. (E) STANCHION POSTS TO REMAIN, TYP.
E9. (E) STANCHION POST ANCHORS TO REMAIN, TYP.
E10. (E) ACCESSIBLE LIFT TO REMAIN.
E11. (E) ROPE CUP ANCHOR IN STAIRS TO BE CHIPPED OUT AND REMOVED PER 3/D1.0.

POOL RECIRCULATION EQUIPMENT
P1. (E) MAIN DRAIN SUMPS TO REMAIN. WATERPROOFING WITHIN MAIN DRAIN SUMPS TO BE DEMOLISHED AND PREPARED FOR NEW WATERPROOFING. (E) MAIN DRAIN COVERS AND GRATES TO BE DEMOLISHED.
P2. (E) FLOOR INLET FITTINGS TO BE DEMOLISHED, TYP.
P3. (E) PIPING LINES AT POOL DECK TO/FROM SWIMMING POOL TO REMAIN.
P4. (E) GUTTER DROPOUT FRAME AND GRATING TO BE REMOVED WITH GUTTER WATERPROOFING.

REMODEL NOTES:
1. WHERE NEW SHOTCRETE/CONCRETE/GROUT IS PLACED AGAINST EXISTING CONCRETE OR SHOTCRETE, THE INTERFACE SHALL BE CLEAN AND FREE OF LAITANCE. THE INTERFACE IS TO BE INTENTIONALLY ROUGHENED TO 1/4" AMPLITUDE. ALL LOOSE OR DETERIORATED MATERIAL IS TO BE REMOVED. (E) CONCRETE/SHOTCRETE TO BE AT A STANDARD SATURATED SURFACE DRY CONDITION AT THE INTERFACE PRIOR TO PLACEMENT ON (N) CONCRETE/SHOTCRETE/GROUT.

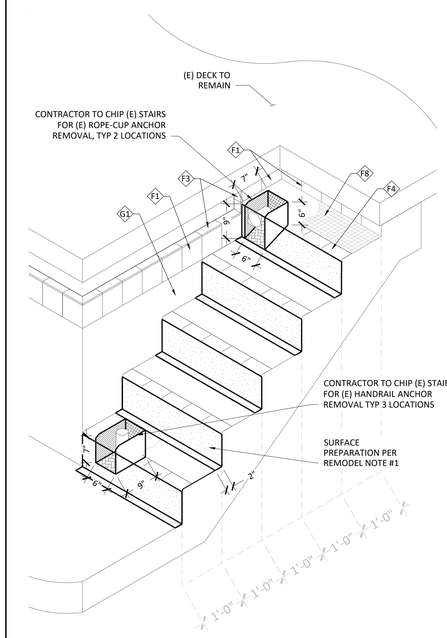

(E) SWIMMING POOL STAIR DEMO
3/4" = 1'-0"
3

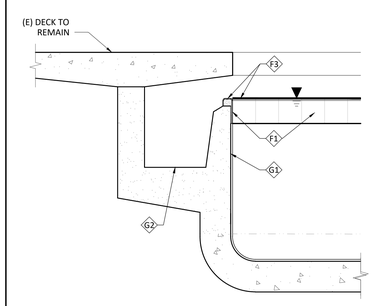

SECTION

POOL WALL FINISH DEMO
3/4" = 1'-0"
2

RSM
Design | Engineering
ROGERS STRINGER MCCLELLAND
1981 N. BROADWAY, SUITE 202
WALNUT CREEK, CA 94596
PH. (925) 217-6619
www.rsm-de.com

SWIMMING POOL DEMOLITION PLAN

TAMALPAIS HIGH SCHOOL
SWIMMING POOL REPLASTER
700 MILLER AVE.
MILL VALLEY, CALIFORNIA 94941

REV	DATE	DESCRIPTION
1		
2		
3		
4		
5		
6		
7		
8		
9		
10		
11		
12		
13		
14		

CONSTRUCTION DOCUMENTS

REGISTERED PROFESSIONAL ENGINEER
DANIEL P. STRINGER
No. 028890
CIVIL
STATE OF CALIFORNIA

PROJECT NO: 059.2501
SCALE: AS NOTED
DATE: FEBRUARY 04, 2026
DRAWN: R. DINELLI
REVIEWED: D. STRINGER
APRROVED: D. STRINGER

D1.0

Copyright © 2026 RSM, Inc.-All Rights Reserved-This document was prepared for use only by the client, only for the purposes stated, and within a reasonable time from issuance. Non-commercial, educational, and scientific use of this document by regulatory agencies is regarded as a "fair use" and not a violation of copyright. Regulatory agencies may make additional copies of this document for internal use. Copies may also be made available to the public as required by law. The reprint must acknowledge the copyright and indicate that permission to reprint has been received.

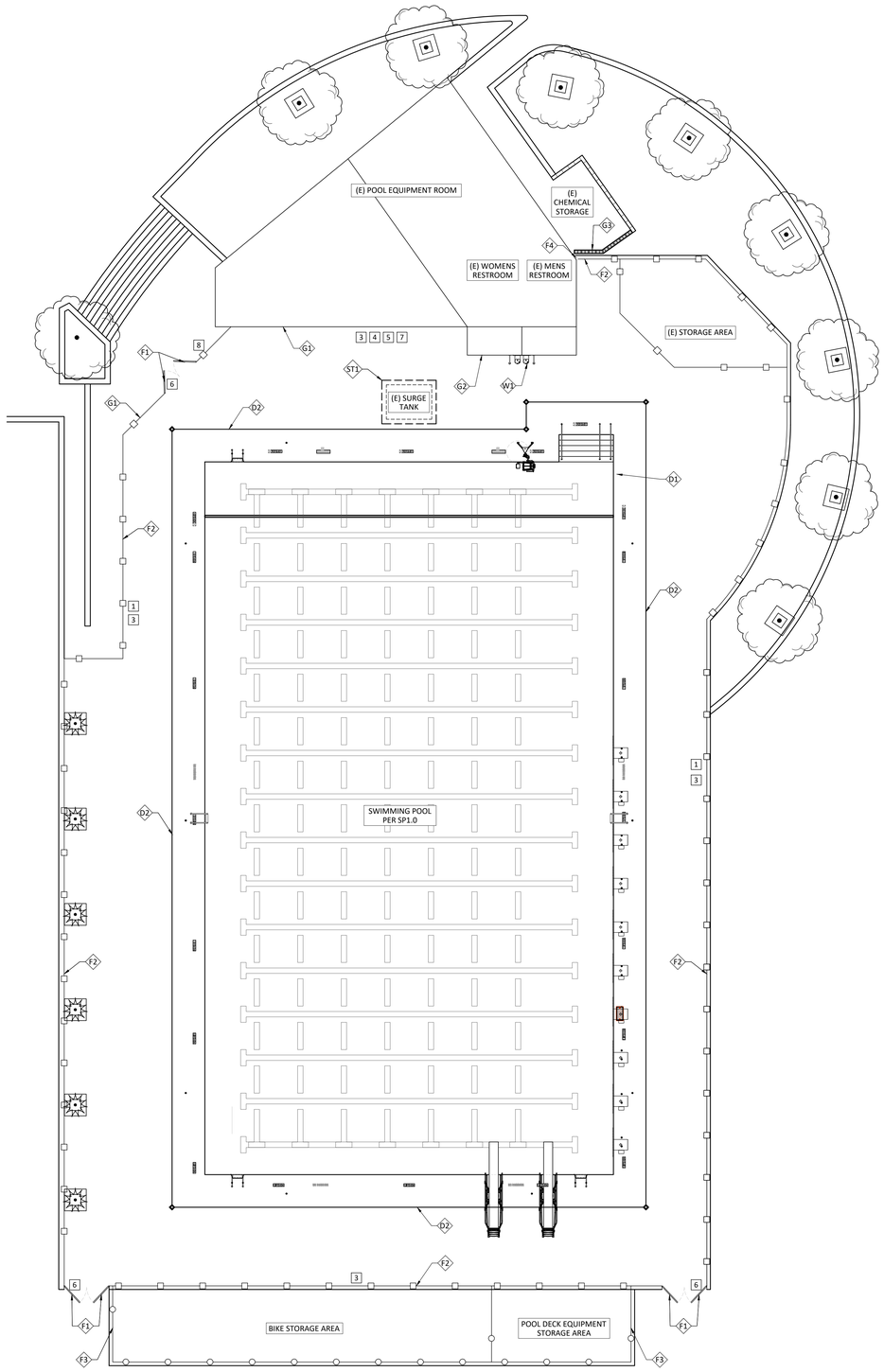

PROJECT SITE NOTES:

1. CONTRACTOR SHALL COORDINATE INGRESS/EGRESS AND HAUL ROUTES WITH THE OWNER PRIOR TO START OF WORK.
2. CONTRACTOR RESPONSIBLE FOR COORDINATING ALL NECESSARY STREET CLOSURES WITH GOVERNING AGENCIES.
3. CONTRACTOR RESPONSIBLE FOR ANY REQUIRED TRAFFIC CONTROL NEEDED TO ACCESS THE SITE DURING DEMOLITION AND CONSTRUCTION.

EXISTING SWIMMING POOL FACILITY NOTES

1. ENGINEER HAS CONFIRMED THE FOLLOWING SITE ITEMS, UNLESS OTHERWISE NOTED. CONTRACTOR TO REVIEW ALL ITEMS LISTED AND NOTIFY ENGINEER IF THERE ARE ANY DISCREPANCIES:
   a. EXISTING POOL DECKING IS SLIP RESISTANT AND SLOPES AWAY FROM POOLS AT NO LESS THAN 1% AND NO GREATER THAN 2% SLOPE TO DECK DRAINAGE SYSTEM OR LANDSCAPING.
   b. HOSE BIBBS ARE PROVIDED SO THAT ALL PORTIONS OF THE POOL DECK AREA MAY BE REACHED WITH A 75 FOOT LENGTH HOSE. HOSE BIBS TO BE PROVIDED WITH ATMOSPHERIC VACUUM BREAKERS.
   c. ALL EXIT GATES AND DOORS OPEN OUTWARD, AWAY FROM THE POOL, EXCEPT WHERE OTHERWISE DICTATED BY APPLICABLE CODE.
   d. ALL GATES AND DOORS FOR POOL AREA ARE EQUIPPED WITH SELF-CLOSING AND SELF-LATCHING DEVICES.
   e. ALL EXIT DOORS AND GATES SERVING THE POOL AREA ARE EQUIPPED WITH PANIC HARDWARE LOCATED 42" TO 44" ABOVE DECK SURFACE PER GROUP OCCUPANCY REQUIREMENTS.
   f. POOL ENCLOSURE IS INSTALLED PER THE REQUIREMENTS OF 2025 CBC SECTION 3119.
   g. OCCUPANT LOAD SIGN IS POSTED IN CONSPICUOUS PLACE NEAR THE MAIN POOL ENTRANCE/EXIT PER CBC SECTION 1004.3.
   h. LIFEGUARD EQUIPMENT IS PROVIDED AS REQUIRED BY GOVERNING AGENCY.

ACCESSIBILITY NOTES:

1. THE PRIMARY MEANS OF ACCESSIBILITY TO THE POOL IS PROVIDED VIA THE ACCESSIBLE LIFT.
2. THE SECONDARY MEANS OF ACCESSIBILITY TO THE POOL IS PROVIDED VIA THE DOUBLE HANDRAILS AT THE STAIR ENTRY AT THE NORTHWEST CORNER OF THE POOL.

SWIMMING POOL SITE KEYNOTES:

DECK

D1. (E) DECK CRACKING BETWEEN THE DECK EDGE AND THE SLOT DRAIN TO BE PREPPED AND SEALED WITH SIKA-FLEX SELF-LEVELING SEALANT, COLOR TO MATCH DECK. APPROXIMATE EXTENTS 500 LF
D2. (E) SLOT DRAIN TO BE PRESSURE WASHED AND FLUSHED.

SURGE TANK

ST1. INTERIOR OF SURGE TANK TO RECEIVE NEW WATERPROOFING. EXISTING DIMENSIONS 8 FT X 10 FT X 8 FT 6 IN DEEP.

FENCING AND GATES

F1. (E) GATES TO REMAIN.
F2. (E) FENCE AND FENCE POST FOOTINGS TO REMAIN.
F3. (E) FENCING TO RECEIVE A SCREEN TO MATCH FACILITY STANDARD, APPROXIMATE EXTENTS 30 LF, V.I.F.
F4. GAP BETWEEN FENCE AND BUILDING TO BE CLOSED TO 4" MAXIMUM PER DETAIL 3/D0.0.

WATER FOUNTAINS

W1. (E) WATER FOUNTAINS TO REMAIN.

GENERAL EQUIPMENT

G1. (N) POOL SIGNAGE TO PLACED PER POOL SIGNAGE KEYNOTES.
G2. (E) EMERGENCY PHONE TO REMAIN.
G3. (E) CMU WALL TO BE REPAIRED PER DETAIL 2/D0.0.

SWIMMING POOL SIGNAGE KEYNOTES:

1. POOL USER CAPACITY SIGN. SEE 1/SP0.1.
2. EMERGENCY TELEPHONE NUMBER SIGN. SEE 2/SP0.1.
3. "WARNING: NO LIFEGUARD ON DUTY" SIGN. SEE 3/SP0.1.
4. "NO DIVING" SIGN. SEE 4/SP0.1.
5. ARTIFICIAL RESPIRATION AND CPR PROCEDURES SIGN. SEE 5/SP0.1.
6. "KEEP CLOSED" SIGN. SEE 6/SP0.1.
7. FIRE DEPARTMENT SIGN. SEE 7/SP0.1.
8. ACTIVE DIARRHEA SIGN. SEE 8/SP0.1.

SWIMMING POOL SITE PLAN
3/32" = 1'-0"

1

RSM
Design | Engineering
ROGERS STRINGER MCCLELLAND
1981 N. BROADWAY, SUITE 202
WALNUT CREEK, CA 94596
PH. (925) 217-6619
www.rsm-de.com

SWIMMING POOL SITE PLAN

TAMALPAIS HIGH SCHOOL
SWIMMING POOL REPLASTER
700 MILLER AVE.
MILL VALLEY, CALIFORNIA 94941

REV	DATE	DESCRIPTION
1		
2		
3		
4		
5		
6		
7		
8		
9		
10		
11		
12		
13		
14		

CONSTRUCTION DOCUMENTS

REGISTERED PROFESSIONAL ENGINEER
DAVID P. STRINGER
No. 33886
CIVIL
STATE OF CALIFORNIA

PROJECT NO:	059.2501
SCALE:	AS NOTED
DATE:	FEBRUARY 04, 2026
DRAWN:	R. DINELLI
REVIEWED:	D. STRINGER
APRROVED:	D. STRINGER

SP0.0

Copyright © 2026 RSM, Inc.-All Rights Reserved-This document was prepared for use only by the client, only for the purposes stated, and within a reasonable time from issuance. Non-commercial, educational, and scientific use of this document by regulatory agencies is regarded as a "fair use" and not a violation of copyright. Regulatory agencies may make additional copies of this document for internal use. Copies may also be made available to the public as required by law. The reprint must acknowledge the copyright and indicate that permission to reprint has been received.

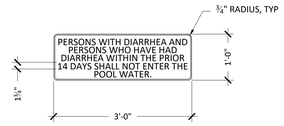

NOTES:
1. 1/8'' THICK ALUMINUM COMPOSITE PANEL
2. DIGITAL VINYL PRINT
3. MATTE UV OVERLAMINATE
4. 1.75'' MIN TEXT
5. QTY 1
6. FINAL DESIGN PER TAMALPAIS HIGH SCHOOL STANDARD

DIARRHEA SIGN (8)
3/4" = 1'-0"

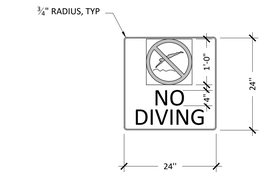

NOTES:
1. 1/8'' THICK ALUMINUM COMPOSITE PANEL
2. DIGITAL VINYL PRINT
3. MATTE UV OVERLAMINATE
4. 4'' TEXT
5. QTY 1
6. FINAL DESIGN PER TAMALPAIS HIGH SCHOOL STANDARD

NO DIVING SIGN (4)
3/4" = 1'-0"

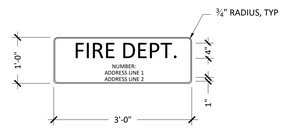

NOTES:
1. 1/8'' THICK ALUMINUM COMPOSITE PANEL
2. DIGITAL VINYL PRINT
3. MATTE UV OVERLAMINATE
4. 4'' LARGE TEXT, 1'' SMALL TEXT
5. QTY 1
6. CONTRACTOR TO OBTAIN APPROPRIATE INFORMATION FROM OWNER WHICH SHALL BE FILLED IN AS PERMANENT PART OF THE SIGN PRIOR TO SIGN FABRICATION.
7. FINAL DESIGN PER TAMALPAIS HIGH SCHOOL STANDARD

FIRE DEPT. SIGN (7)
3/4" = 1'-0"

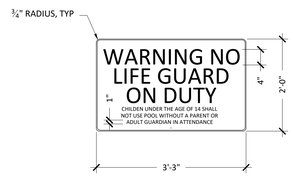

NOTES:
1. 1/8'' THICK ALUMINUM COMPOSITE PANEL
2. DIGITAL VINYL PRINT
3. MATTE UV OVERLAMINATE
4. 4'' LARGE TEXT, 1'' SMALL TEXT
5. QTY 4
6. FINAL DESIGN PER TAMALPAIS HIGH SCHOOL STANDARD

NO LIFEGUARD SIGN (3)
3/4" = 1'-0"

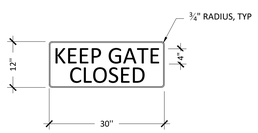

NOTES:
1. 1/8'' THICK ALUMINUM COMPOSITE PANEL
2. DIGITAL VINYL PRINT
3. MATTE UV OVERLAMINATE
4. 4'' TEXT
5. QTY 3
6. FINAL DESIGN PER TAMALPAIS HIGH SCHOOL STANDARD

KEEP CLOSED SIGN (6)
3/4" = 1'-0"

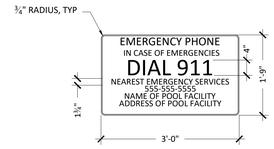

NOTES:
1. 1/8'' THICK ALUMINUM COMPOSITE PANEL
2. DIGITAL VINYL PRINT
3. MATTE UV OVERLAMINATE
4. 4'' LARGE TEXT, 1.75'' SMALL TEXT
5. QTY 1
6. FINAL DESIGN PER TAMALPAIS HIGH SCHOOL STANDARD

TELEPHONE SIGN (2)
3/4" = 1'-0"

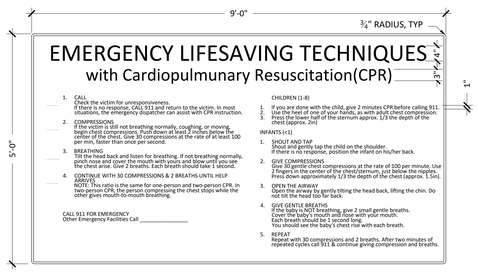

NOTES:
1. 1/8'' THICK ALUMINUM COMPOSITE PANEL
2. DIGITAL VINYL PRINT
3. MATTE UV OVERLAMINATE
4. 4'' LARGE TEXT, 1'' SMALL TEXT
5. QTY 1
6. FINAL DESIGN PER TAMALPAIS HIGH SCHOOL STANDARD

CPR SIGN (5)
3/4" = 1'-0"

NOTES:
1. 1/8'' THICK ALUMINUM COMPOSITE PANEL
2. DIGITAL VINYL PRINT
3. MATTE UV OVERLAMINATE
4. LARGE TEXT 4''
5. QTY 2
6. FINAL DESIGN PER TAMALPAIS HIGH SCHOOL STANDARD

BATHER LOAD SIGN (1)
3/4" = 1'-0"

RSM
Design | Engineering
ROGERS STRINGER MCCLELLAND
1981 N. BROADWAY, SUITE 202
WALNUT CREEK, CA 94596
PH. (925) 217-6619
www.rsm-de.com

SWIMMING POOL SITE PLAN DETAILS

TAMALPAIS HIGH SCHOOL
SWIMMING POOL REPLASTER
700 MILLER AVE.
MILL VALLEY, CALIFORNIA 94941

REV	DATE	DESCRIPTION
1		
2		
3		
4		
5		
6		
7		
8		
9		
10		
11		
12		
13		
14		

CONSTRUCTION DOCUMENTS

REGISTERED PROFESSIONAL ENGINEER
DANIEL P. STRINGER
No. 33899
CIVIL
STATE OF CALIFORNIA

PROJECT NO:	059.2501
SCALE:	AS NOTED
DATE:	FEBRUARY 04, 2026
DRAWN:	R. DINELLI
REVIEWED:	D. STRINGER
APRROVED:	D. STRINGER

SP0.1

Copyright © 2026 RSM, Inc.-All Rights Reserved-This document was prepared for use only by the client, only for the purposes stated, and within a reasonable time from issuance. Non-commercial, educational, and scientific use of this document by regulatory agencies is regarded as a "fair use" and not a violation of copyright. Regulatory agencies may make additional copies of this document for internal use. Copies may also be made available to the public as required by law. The reprint must acknowledge the copyright and indicate that permission to reprint has been received.

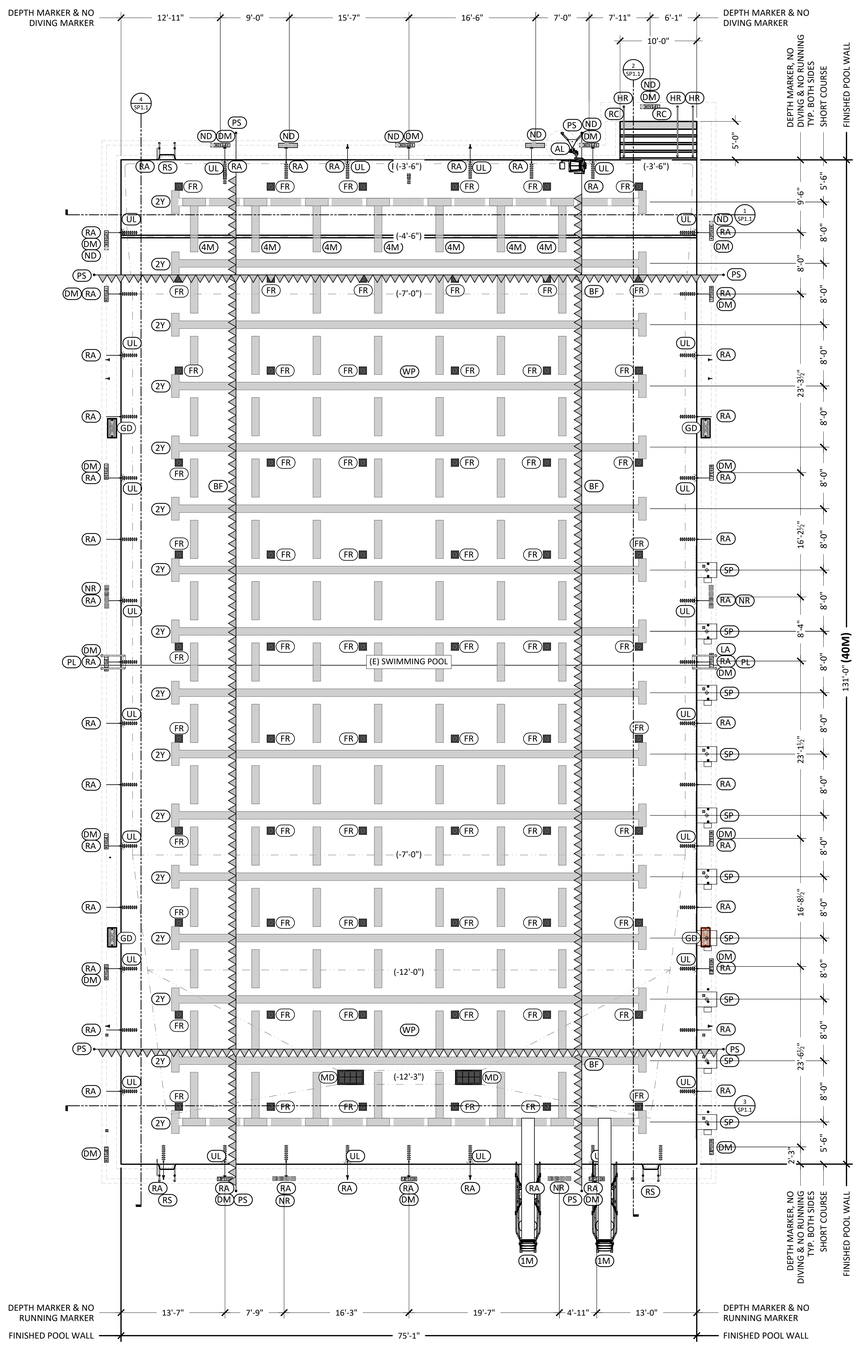

POOL LAYOUT PLAN GENERAL NOTES:

1. POOL FINISH PER FINISH SCHEDULE.
2. PLAN IS TO BE USED IN CONJUNCTION WITH THE POOL STRUCTURAL PLANS, POOL PIPING PLAN AND POOL ELECTRICAL PLANS. REFER TO THOSE DRAWINGS & DETAILS FOR INFORMATION NOT SHOWN ON THIS PLAN.
3. ALL DIMENSIONS SHALL BE VERIFIED PRIOR TO START OF WORK. ANY DISCREPANCIES SHALL BE REPORTED TO THE ENGINEER.
4. OVERALL DIMENSIONS SHOWN ARE FROM INSIDE FINISH OF WALLS & FLOORS.
5. FEATURES OR EQUIPMENT DIMENSIONS SHOWN ARE FROM CENTER TO CENTER.
6. DEPTH MARKERS AND WARNING SIGNS ARE SHOWN IN APPROXIMATE LOCATIONS. DEPTH MARKERS AND WARNING SIGNS MAY NOT EXCEED 25'-0" APART PER LOCAL CODE. NO DIVING WARNING SIGNAGE ONLY REQUIRED WHEN POOL DEPTH IS LESS THAN 6 FEET.
7. LIFEGUARD EQUIPMENT SHALL BE PROVIDED AS REQUIRED AS NOTED ON THE DRAWINGS.
8. ALL METAL COMPONENTS TO BE BONDED & GROUNDED PER C.E.C.
9. ALL APPLICABLE STATE AND LOCAL LAWS AND CODES SHALL BE FOLLOWED.

SWIMMING POOL DESIGN DATA	
SIZE (LENGTH BY WIDTH):	131 FT 0 IN BY 75 FT 1 IN
DEPTH PROFILE:	3 FT 6 IN TO 12 FT 3 IN
SURFACE AREA:	9,885 SF
PERIMETER:	422 FT
VOLUME:	599,592 GAL
MAX BATHER LOAD:	949 BATHERS

EXISTING SWIMMING POOL SYSTEM DESIGN DATA	
TURNOVER RATE:	5.71 HRS
EXISTING RECIRCULATION RATE:	1750 GPM
EXISTING FILTER AREA:	125.00 SF
EXISTING FILTRATION RATE:	14 GPM/SF

SWIMMING POOL FINISH SCHEDULE	
PLASTER FINISH	(N) 1/2" WHITE MARBLE DUST PLASTER.
WATER LINE TILE	(N) 6" X 6" GLAZED CERAMIC TILE BY DAL-TILE OR APPROVED EQUAL. COLOR D129 SKY BLUE.
STEP TRIM TILE	(N) 1" X 1" UNGLAZED MOSAIC TILE WITH MATCHING 1"X1" RADIUS WALL CAP TILE BY DAL-TILE OR APPROVED EQUAL. COLOR D331 BLACK.
TOP STEP TILE	(N) 1" X 1" MOSAIC TILE BY DAL-TILE OR APPROVED EQUAL. COLOR WHITE.
DEPTH TRANSITION TILE	(N) 1" X 1" MOSAIC TILE BY DAL-TILE OR APPROVED EQUAL. COLOR D621 NAUTICAL BLUE.
MAIN DRAIN TRIM TILE	(N) 2" X 2" MOSAIC TILE BY DAL-TILE OR APPROVED EQUAL. COLOR WHITE.
FLOOR INLET TRIM TILE	(N) 1" X 1" MOSAIC TILE BY DAL-TILE OR APPROVED EQUAL. COLOR WHITE.
GUTTER CAP TILE	(N) 2 1/2" X 6" MOSAIC GLAZED TILE BY DAL-TILE OR APPROVED EQUAL. COLOR D129 SKY BLUE.
WALL TARGET TILE	(N) 1" X 1" MOSAIC TILE BY DAL-TILE OR APPROVED EQUAL. COLOR D331 BLACK.
DECK - WALL TARGET TILE	(N) 1" X 1" UNGLAZED MOSAIC TILE WITH MATCHING 1"X1" RADIUS WALL CAP TILE BY DAL-TILE OR APPROVED EQUAL. COLOR D331 BLACK.
LANE LINE MARKER TILE	(N) 1" X 1" MOSAIC TILE BY DAL-TILE OR APPROVED EQUAL. COLOR D331 BLACK.
LANE LINE 15M MARKER TILE	(N) 1" X 1" MOSAIC TILE BY DAL-TILE OR APPROVED EQUAL. COLOR RED.
LANE LINE SPACER TILE	(N) 1" X 1" MOSAIC TILE BY DAL-TILE OR APPROVED EQUAL. COLOR WHITE.
LANE LINE GUTTER CAP TILE	(N) 2 1/2" X 6" STAINLESS STEEL CAP (AT EACH ROPE ANCHOR).

SWIMMING POOL LAYOUT EQUIPMENT SCHEDULE

CALL OUT	EQUIPMENT	MODEL/DESCRIPTION	DETAIL
DM	VERTICAL DEPTH MARKERS	(N) 6" X 6" GLAZED WITH CONTRASTING LETTERING BY DAL-TILE OR APPROVED EQUAL. COLOR D331 BLACK LETTERS ON D317 BISCUT BACKGROUND. W/MATCHING 6"X1" RADIUS WALL CAP TILE.	4/SP1.2
DM	DECK DEPTH MARKERS	(N) 6" X 6" NON SLIP CERAMIC TILE BY DAL-TILE OR APPROVED EQUAL. COLOR D331 BLACK LETTERS ON D317 BISCUT BACKGROUND.	4/SP1.2
ND	NO DIVING MARKER	(N) 6"X6" SLIP RESISTANT CERAMIC TILE SYMBOL WITH (N) 1"X1" LETTERING, BLACK TILE ON BISCUIT BACKGROUND PER 3/SP1.2..	3/SP1.2
NR	NO RUNNING MARKER	(N) 1"X1" LETTERING, BLACK TILE ON BISCUIT BACKGROUND PER 3/SP1.2..	3/SP1.2
PL	POOL LADDER	(E) TO REMAIN, NEW RUBBER BUMBERS AND KEY LOCKING ESCHEUTEON PLATES TO BE PROVIDED FOR EACH LADDER.	3/SP1.2
RS	RECESSED STEPS	(N) FLUSH TO POOL WALL BUILT-IN INJECTION MOLDED (3 STEPS PER SET) TO MATCH EXISTING DIMENSIONS, V.I.F.	4/SP1.3
RS	GRAB RAILS	(E) RAILING TO BE POLISHED AND REPLACED. (N) DECK ANCHORS TO REMAIN.	4/SP1.3
HR	HANDRAILS	(N) CUSTOM 304L STAINLESS STEEL 1.90 OD 0.145" WALL THICKNESS RAILS AND ESCUTCHEONS. CONTRACTOR TO CONFIRM (E) DECK ANCHOR DIA.	1/SP1.3
AL	ADA ACCESS LIFT	(E) TO REMAIN.	NA
UL	UNDERWATER LIGHTS	(N) J & J ELECTRONICS PUREWHITE LED UNDERWATER POOL LIGHT, 58W, 500 W EQUIVALENT.	12/SP1.2
1M	1 METER DIVING PLATFORM	(E) TO REMAIN.	NA
BF	BACKSTROKE FLAGS	PRE-STRUNG 11" BY 14.5" NYLON BACKSTROKE FLAGS AND ALL NECESSARY HARDWARE BY KIEFER, COMPETITOR, ANTI-WAVE, OR APPROVED EQUAL. COLORS BY ARCHITECT OR AQUATIC DESIGNER. FLAGS SHALL INCLUDE CUSTOM LOGO APPROVED BY OWNER.	NA
4M	40M LANE LINE DIVIDERS	(E) LANE LINE TO REMAIN.	NA
2Y	25Y LANE LINE DIVIDERS	(N) 4" DISKS - 3' ALTERNATING COLOR RED AND BLUE, 5M SOLID RED COLOR AT EACH END, WITH 15M RESURFACING MARKERS BY COMPETITOR, ANTI-WAVE, OR APPROVED EQUAL. W/(2) (N) 24" LANE LINE EXTENSION HOOKS PER LANE LINE	NA
RA	EYE HOOK ROPE ANCHORS	(E) TO BE RESUED.	NA
RC	ROPE CUP ANCHORS	(N) SPECTRUM STAINLESS STEEL COMMERCIAL CUP ANCHOR #35214 WITH INTEGRAL ANCHOR, MINIMUM 4" EMBEDMENT.	1/SP1.2
PS	STANCHION POSTS	(E) TO BE RESUED.	NA
PS	STANCHION ANCHORS	(E) TO BE RESUED.	NA
WP	WATER POLO GOAL	(E) TO REMAIN.	NA

SWIMMING POOL RECIRCULATION EQUIPMENT SCHEDULE

CALL OUT	EQUIPMENT	MODEL/DESCRIPTION	DETAIL
MD	MAIN DRAIN	(N) LAWSON AQUATIC MLD-FG-1836 GRATES AND FRAMES TO BE INSTALLED INTO (E) SUMPS. 2080 GPM MAX	13/SP1.2
GD	GUTTER DROPOUT COVERS	(N) AQUASTAR WAV12WR GRATES AND FRAMES TO BE INSTALLED TO MATCH EXISTING.	11/SP1.2
FR	FLOOR RETURN INLET	(N) STA-RITE ADJUSTABLE FLOOR RETURN CAP TO BE INSTALLED INTO (E) HOUSING.	5/SP1.2
EXISITNG PUMP		EXISTING PACO, HORIZONTAL MOUNTED END SUCTION, 40 HP, 3 PHASE, 1750 GPM @ 60' TDH W/ DANFOSS VFD	
EXISTING FILTERS		EXISTING EKO3 42-250 HIGH RATE SAND FILTERS, 25 SF/FILTER X 5 FILTERS = 125 SF TOTAL	
EXISTING HEATER		EXISTING (2) RAYPAK XTHERM H7-2005A, 1,999,000 BTUH INPUT, 96% EFFICIENCY	
ALL EQUIPMENT NOTED ARE BASIS OF DESIGN & DESIGNATE MINIMUM PERFORMANCE STANDARDS. EQUIVALENT PRODUCTS MAY BE USED PROVIDED THEY ARE SUBMITTED TO ENGINEER OF RECORD FOR APPROVAL.			

RSM
Design | Engineering
ROGERS STRINGER MCCLELLAND
1981 N. BROADWAY, SUITE 202
WALNUT CREEK, CA 94596
PH. (925) 217-6619
www.rsm-de.com

SWIMMING POOL LAYOUT PLAN

TAMALPAIS HIGH SCHOOL
SWIMMING POOL REPLASTER
700 MILLER AVE.
MILL VALLEY, CALIFORNIA 94941

REV	DATE	DESCRIPTION
1		
2		
3		
4		
5		
6		
7		
8		
9		
10		
11		
12		
13		
14		

CONSTRUCTION DOCUMENTS

REGISTERED PROFESSIONAL ENGINEER
DANIEL P. STRINGER
No. 35898
CIVIL
STATE OF CALIFORNIA

PROJECT NO:	059.2501
SCALE:	AS NOTED
DATE:	FEBRUARY 04, 2026
DRAWN:	R. DINELLI
REVIEWED:	D. STRINGER
APRROVED:	D. STRINGER

SP1.0

SWIMMING POOL LAYOUT PLAN
1/8" = 1'-0"
1

Copyright © 2026 RSM, Inc.-All Rights Reserved-This document was prepared for use only by the client, only for the purposes stated, and within a reasonable time from issuance. Non-commercial, educational, and scientific use of this document by regulatory agencies is regarded as a "fair use" and not a violation of copyright. Regulatory agencies may make additional copies of this document for internal use. Copies may also be made available to the public as required by law. The reprint must acknowledge the copyright and indicate that permission to reprint has been received.

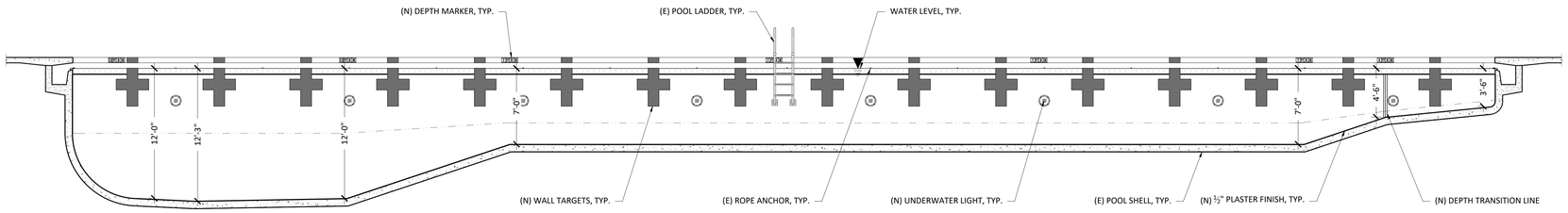

SWIMMING POOL SECTION 4
3/16" = 1'-0"

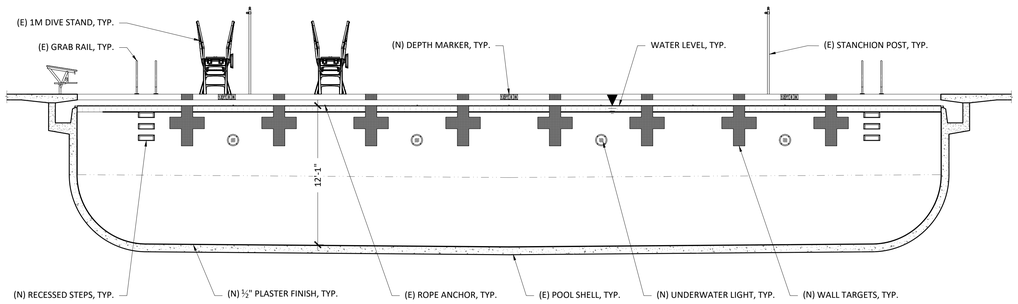

SWIMMING POOL SECTION 3
3/16" = 1'-0"

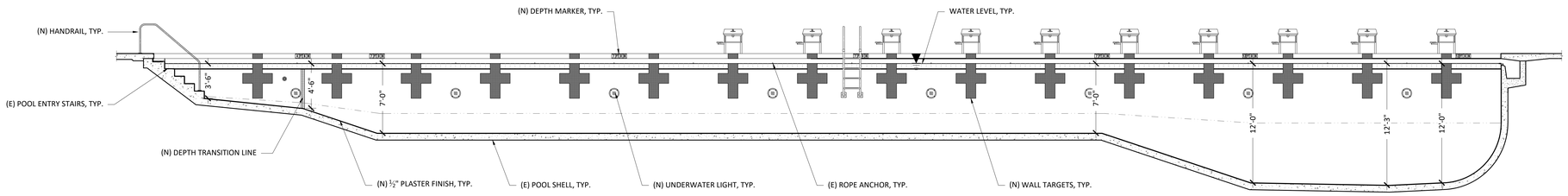

SWIMMING POOL SECTION 2
3/16" = 1'-0"

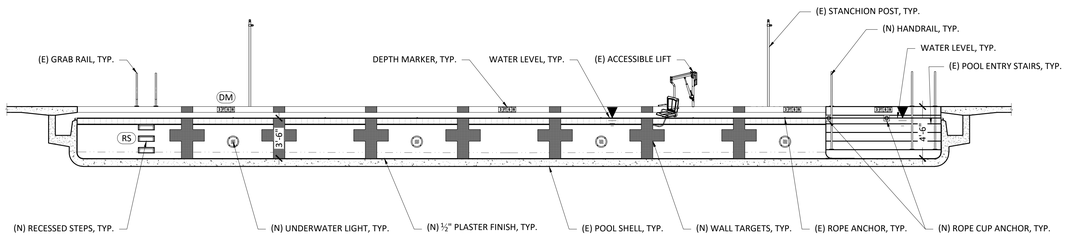

SWIMMING POOL SECTION 1
3/16" = 1'-0"

RSM
Design | Engineering
ROGERS STRINGER MCCLELLAND
1981 N. BROADWAY, SUITE 202
WALNUT CREEK, CA 94596
PH. (925) 217-6619
www.rsm-de.com

SWIMMING POOL SECTIONS

TAMALPAIS HIGH SCHOOL
SWIMMING POOL REPLASTER
700 MILLER AVE.
MILL VALLEY, CALIFORNIA 94941

REV	DATE	DESCRIPTION
1		
2		
3		
4		
5		
6		
7		
8		
9		
10		
11		
12		
13		
14		

CONSTRUCTION DOCUMENTS

REGISTERED PROFESSIONAL ENGINEER
DANIEL P. STRINGER
No. 33897
CIVIL
STATE OF CALIFORNIA

PROJECT NO:	059.2501
SCALE:	AS NOTED
DATE:	FEBRUARY 04, 2026
DRAWN:	R. DINELLI
REVIEWED:	D. STRINGER
APRROVED:	D. STRINGER

SP1.1

Copyright © 2026 RSM, Inc.-All Rights Reserved-This document was prepared for use only by the client, only for the purposes stated, and within a reasonable time from issuance. Non-commercial, educational, and scientific use of this document by regulatory agencies is regarded as a "fair use" and not a violation of copyright. Regulatory agencies may make additional copies of this document for internal use. Copies may also be made available to the public as required by law. The reprint must acknowledge the copyright and indicate that permission to reprint has been received.

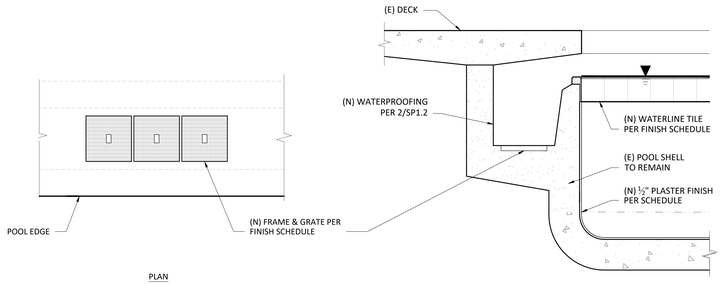

POOL GUTTER DROP BOX (11)
3/4" = 1'-0"

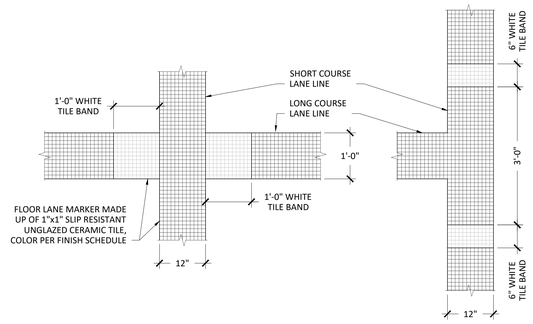

INTERSECTING TILE LANE LINE MARKERS (8)
3/4" = 1'-0"

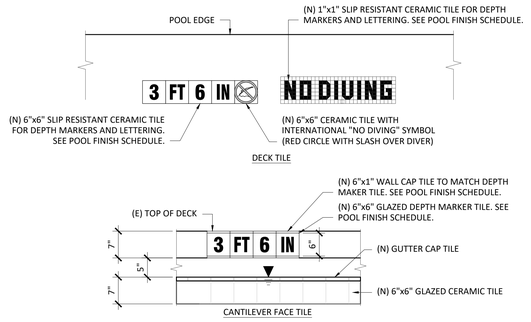

NOTE:
1. "NO DIVING" SYMBOL/LETTERING ONLY REQUIRED FOR DEPTHS 6'-0" OR LESS
2. (N) TILE TO BE PLACED IN THE SAME LOCATION AS (E) TILE

POOL DEPTH MARKER LOCATION (4)
3/4" = 1'-0"

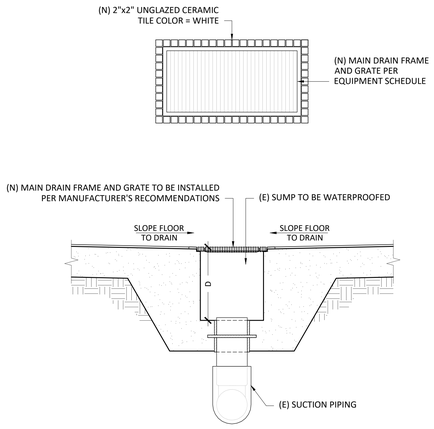

(E) SUMP REQUIREMENTS		
MAIN DRAIN	MIN. SUMP DEPTH "D"	MIN. PIPE SIZE
POOL RECIRCULATION	18"	12"

SUMP & GRATE NOTES
1. CONFIRM THAT MAIN DRAIN COVER APPROVED FLOW RATE IS EQUAL TO OR GREATER THAN DESIGN FLOW RATE.
2. CONTRACTOR TO VERIFY VGB COMPLIANCE ON CDPH AB1020 COMPLIANCE FORM PER HEALTH & SAFETY CODE SECTION 116064.2
3. SUCTION OUTLET FITTING ASSEMBLIES MUST BE TESTED, CERTIFIED AND LABELED PER APSP-16 2017.
4. CONTRACTOR TO CONFIRM SUMP DEPTH "D" AND SIDE OR BOTTOM SUCTION.

TYPICAL MAIN DRAIN (13)
3/4" = 1'-0"

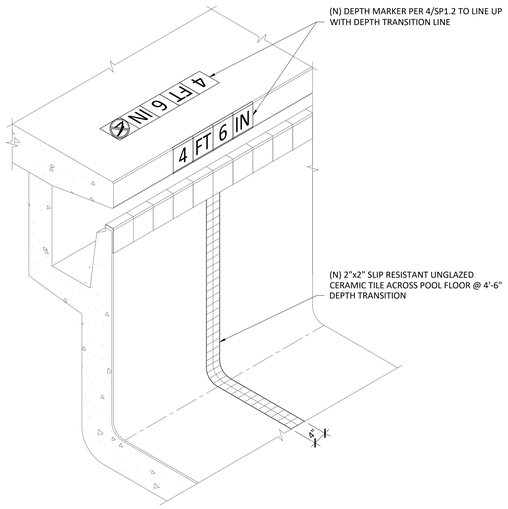

4 FT - 6 IN DEPTH TRANSITION MARKER (10)
3/4" = 1'-0"

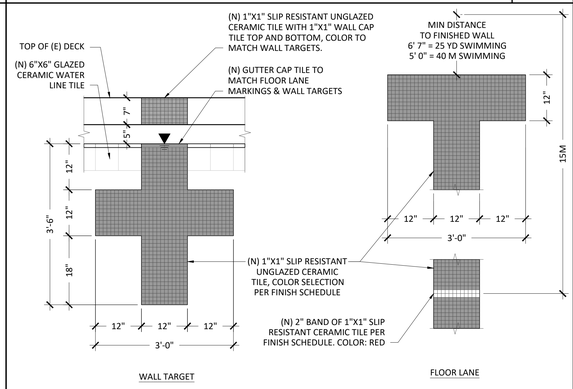

FLOOR LANE MARKERS & WALL TARGETS (7)
3/4" = 1'-0"

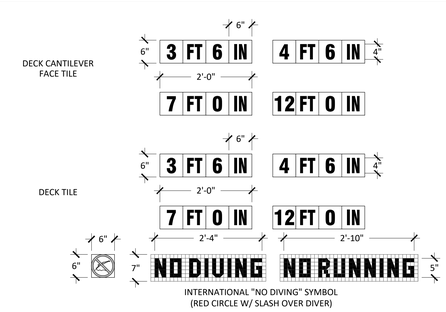

NOTE:
1. ALL DECK FACE TILE TO BE 6"x6" GLAZED CERAMIC TILE WITH MATCHING RADIUS CAP TILE
2. ALL DECK DEPTH MARKERS TO BE 6"x6" SLIP RESISTANT CERAMIC TILE
3. ALL DECK "NO DIVING" AND "NO RUNNING" LABELS TO BE 1"X1" SLIP RESISTANT CERAMIC TILE
4. LETTERING & NUMBERS TO BE MADE UP OF CONTRASTING TILE COLOR, SEE POOL FINISH SCHEDULE
5. "NO DIVING" SYMBOL/LETTERING ONLY REQUIRED FOR DEPTHS 6'-0" OR LESS

DEPTH MARKER TILE (3)
3/4" = 1'-0"

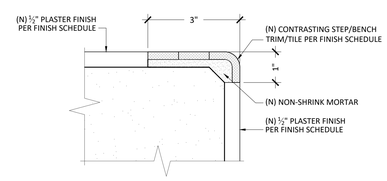

CONTRASTING NOSING (6)
6" = 1'-0"

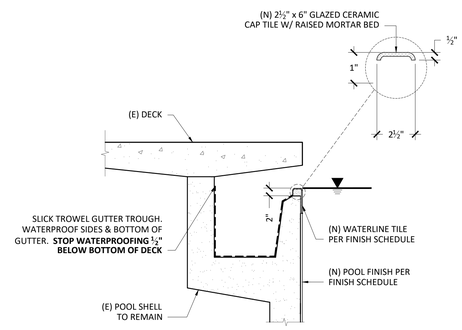

POOL RECESSED GUTTER (2)
3/4" = 1'-0"

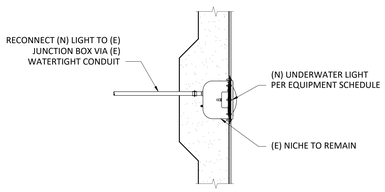

NOTE:CONFIRM ALL NICHES BOND & GROUND PER CEC

UNDERWATER LIGHT (12)
3/4" =1'-0"

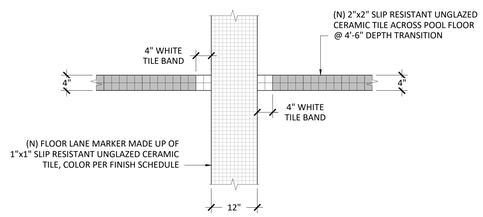

INTERSECTING TILE FLOOR MARKERS (9)
3/4" = 1'-0"

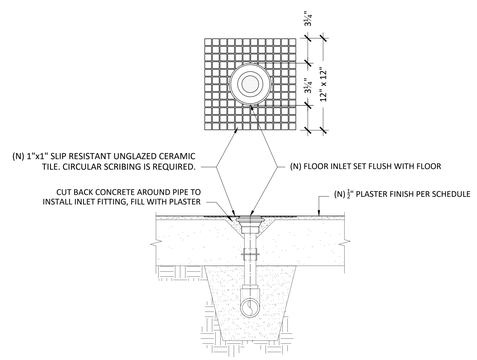

FLOOR INLET TRIM TILE (5)
N.T.S.

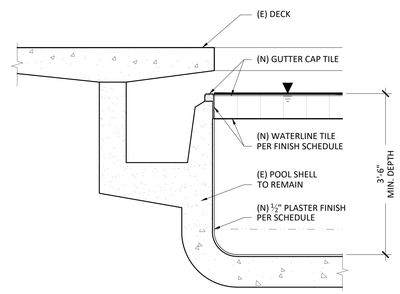

TYPICAL WALL (1)
3/4" = 1'-0"

RSM Design | Engineering
ROGERS STRINGER MCCLELLAND
1981 N. BROADWAY, SUITE 202
WALNUT CREEK, CA 94596
PH. (925) 217-6619
www.rsm-de.com

SWIMMING POOL FINISH DETAILS

TAMALPAIS HIGH SCHOOL
SWIMMING POOL REPLASTER
700 MILLER AVE.
MILL VALLEY, CALIFORNIA 94941

REV	DATE	DESCRIPTION
1		
2		
3		
4		
5		
6		
7		
8		
9		
10		
11		
12		
13		
14		

CONSTRUCTION DOCUMENTS

REGISTERED PROFESSIONAL ENGINEER DANIEL P. STRINGER No. 33886 CIVIL STATE OF CALIFORNIA

PROJECT NO: 059.2501
SCALE: AS NOTED
DATE: FEBRUARY 04, 2026
DRAWN: R. DINELLI
REVIEWED: D. STRINGER
APPROVED: D. STRINGER

SP1.2

Copyright © 2026 RSM, Inc.-All Rights Reserved-This document was prepared for use only by the client, only for the purposes stated, and within a reasonable time from issuance. Non-commercial, educational, and scientific use of this document by regulatory agencies is regarded as a "fair use" and not a violation of copyright. Regulatory agencies may make additional copies of this document for internal use. Copies may also be made available to the public as required by law. The reprint must acknowledge the copyright and indicate that permission to reprint has been received.

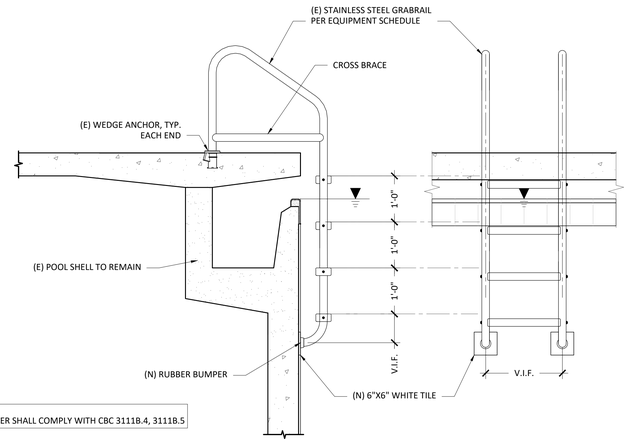

NOTES:
1. POOL LADDER SHALL COMPLY WITH CBC 3111B.4, 3111B.5

SECTION

ELEVATION

SWIMMING POOL GRAB RAIL LADDER

3/4" = 1'-0"

5

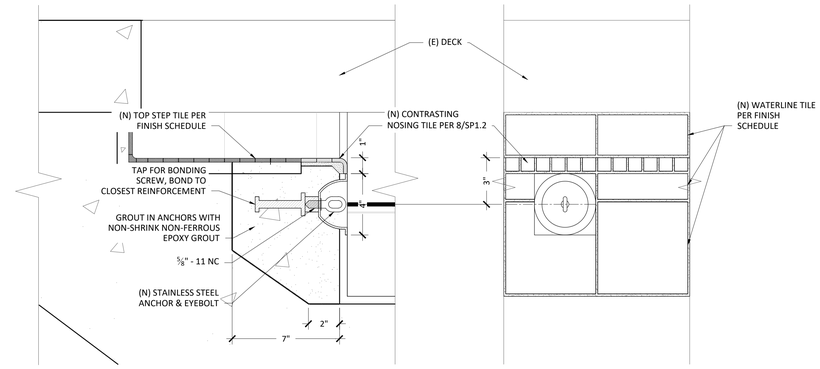

SECTION

ELEVATION

NOTE: BOND & GROUND PER CEC

ROPE CUP ANCHOR ADDITION

3" = 1'-0"

2

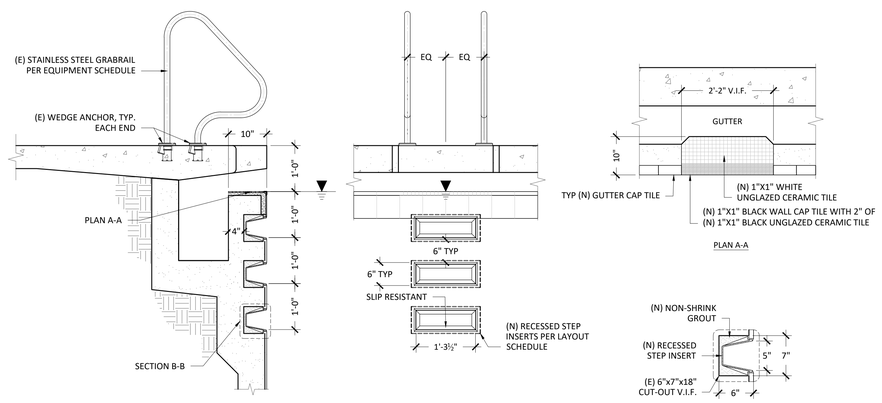

SECTION

ELEVATION

SECTION B-B
N.T.S.

POOL RECESSED STEPS

3/4" =1'-0"

4

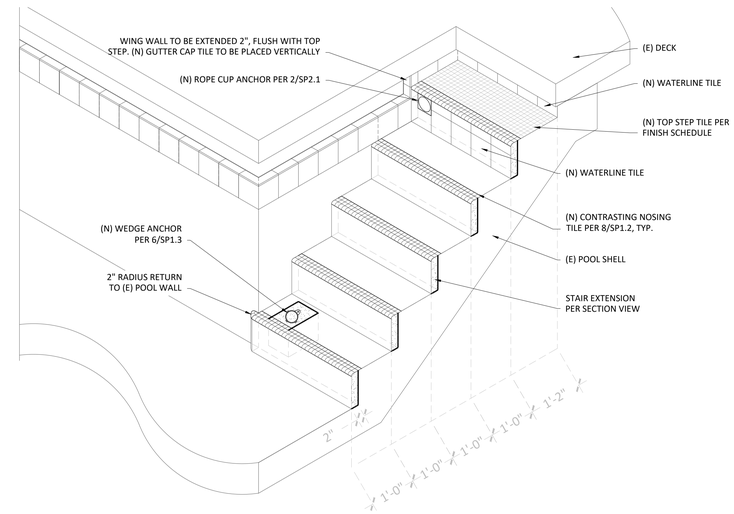

ISOMETRIC

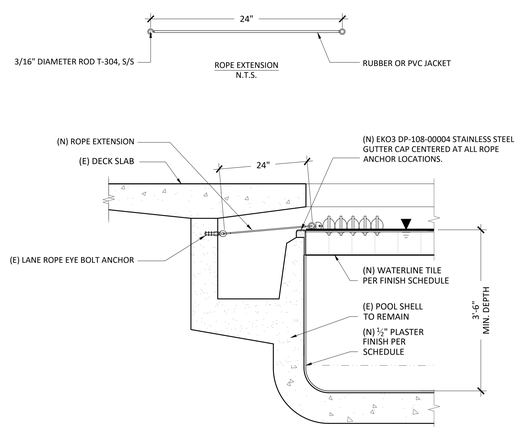

ROPE EXTENSION
N.T.S.

LANE ROPE EXTENSION

3/4" = 1'-0"

3

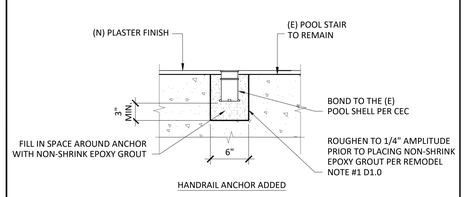

HANDRAIL ANCHOR ADDED

WEDGE ANCHOR ADDITION TO (E) STAIRS

3/4" = 1'-0"

6

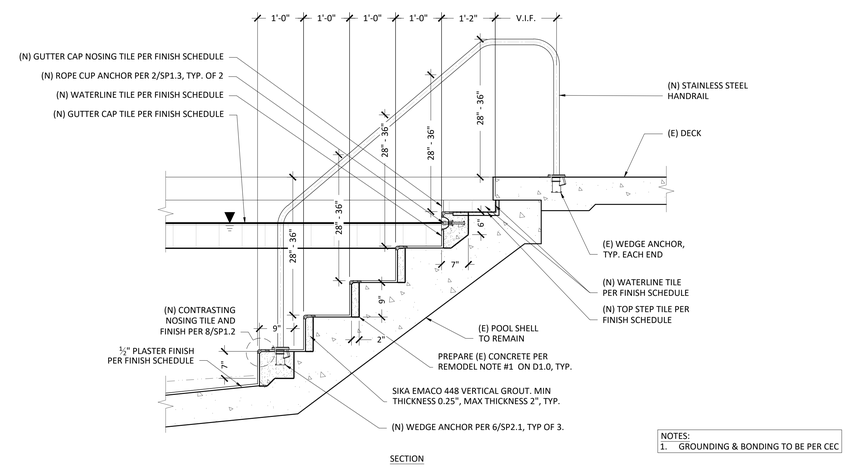

SECTION

NOTES:
1. GROUNDING & BONDING TO BE PER CEC

POOL ENTRY STAIRS

3/4" = 1'-0"

1

RSM
Design | Engineering
ROGERS STRINGER MCCLELLAND
1981 N. BROADWAY, SUITE 202
WALNUT CREEK, CA 94596
PH. (925) 217-6619
www.rsm-de.com

SWIMMING POOL FINISH DETAILS

TAMALPAIS HIGH SCHOOL
SWIMMING POOL REPLASTER
700 MILLER AVE.
MILL VALLEY, CALIFORNIA 94941

REV	DATE	DESCRIPTION
1		
2		
3		
4		
5		
6		
7		
8		
9		
10		
11		
12		
13		
14		

CONSTRUCTION DOCUMENTS

REGISTERED PROFESSIONAL ENGINEER
DAVID P. STRINGER
No. 28897
CIVIL
STATE OF CALIFORNIA

PROJECT NO:	059.2501
SCALE:	AS NOTED
DATE:	FEBRUARY 04, 2026
DRAWN:	R. DINELLI
REVIEWED:	D. STRINGER
APRROVED:	D. STRINGER

SP1.3

Copyright © 2026 RSM, Inc.-All Rights Reserved-This document was prepared for use only by the client, only for the purposes stated, and within a reasonable time from issuance. Non-commercial, educational, and scientific use of this document by regulatory agencies is regarded as a "fair use" and not a violation of copyright. Regulatory agencies may make additional copies of this document for internal use. Copies may also be made available to the public as required by law. The reprint must acknowledge the copyright and indicate that permission to reprint has been received.