ADDENDUM #1

Date: 02/09/2026

Project: Phase #2 of Finish Renovations at
John Wood Elementary School.
6100 East 73rd Ave_
Merrillville, Indiana 46410
Architect's Project #25058

To: Prospective Bidders

This addendum forms a part of the Bid Documents and modifies the original Bid Documents dated 1/29/2026 as noted below. Acknowledge receipt of this addendum in the space on the Bid Form. Failure to do so may subject bidder to disqualification.

GENERAL

1. All vinyl Base shall be 4" height.

SPECIFICATIONS

2. Specification Section 00 3100 Available Project Information – Remove and discard the Amerecor Inc. Site Plan Survey and replace it with the attached document.
3. Specification Section 09 6813 Carpet Tile & Vinyl base – Paragraph 2.02 Vinyl Base Section B - Revise height of vinyl base to be 4".
4. The attached Specification Section 10 2813 Toilet Accessories shall become part of the Project Manual.
5. The attached Specification Section 22 1000 Plumbing shall become part of the Project Manual.

DRAWINGS

6. See attached Revised Drawing Sheet Title – Title Sheet - This plan shows clouded and tagged revisions dated 02-09-2026.
7. See attached Revised Drawing Sheet A1.0.1 – _Partial Floor Plan – Area A – Demolition_- This plan shows clouded and tagged revisions dated 02-09-2026.
8. See attached Revised Drawing Sheet A1.0.2 – _Partial Floor Plan – Area B – Demolition_- This plan shows clouded and tagged revisions dated 02-09-2026.
9. See attached Revised Drawing Sheet A1.0.3 – _Partial Floor Plan – Area C – Demolition_- This plan shows clouded and tagged revisions dated 02-09-2026.
10. See attached Revised Drawing Sheet A1.0.4 – _Partial Floor Plan – Area D – Demolition_- This plan shows clouded and tagged revisions dated 02-09-2026.
11. See attached Revised Drawing Sheet A1.0.5 – _Partial Floor Plan – Area D – Demolition_- This plan shows clouded and tagged revisions dated 02-09-2026.
12. See attached Revised Drawing Sheet A7.1.0 – Interior Elevations - dated 02-09-2026. This drawing is being reissued in its entirety.
13. See attached Revised Drawing Sheet A7.1.1 – Interior Elevations - dated 02-09-2026. This drawing is being reissued in its entirety.

(219) 322-5950 6919 W. Lincoln Highway, Crown Point, Indiana 46307

14. See attached Revised Drawing Sheet A9.1.0 – Master Floor Plan – Floor Finish - dated 02-09-2026. This drawing is being reissued in its entirety.
15. See attached Drawing Sheet P1.1.0 – Master Plumbing Plan – New Construction. This drawing is being issued as part of the Project Documents.
16. See attached Drawing Sheet P1.1.1 – Partial Plumbing Plan – New Construction. This drawing is being issued as part of the Project Documents.
17. See attached Drawing Sheet P1.1.2 – Partial Plumbing Plan – New Construction. This drawing is being issued as part of the Project Documents.

Attached to Addendum #1

- Specification Section 00 3100 Available Project Information – Site Survey Drawing
- Specification Section 10 2813 Toilet Accessories
- Specification Section 22 1000 Plumbing
- Revised Drawing Sheet Title – Title Sheet
- Revised Drawing Sheet A1.0.1 – _Partial Floor Plan – Area A – Demolition
- Revised Drawing Sheet A1.0.2 – _Partial Floor Plan – Area B – Demolition
- Revised Drawing Sheet A1.0.3 – _Partial Floor Plan – Area C – Demolition
- Revised Drawing Sheet A1.0.4 – _Partial Floor Plan – Area D – Demolition
- Revised Drawing Sheet A1.0.5 – _Partial Floor Plan – Area D – Demolition
- Revised Drawing Sheet A7.1.0 – Interior Elevations
- Revised Drawing Sheet A7.1.1 – Interior Elevations
- Revised Drawing Sheet A9.1.0 – Master Floor Plan – Floor Finish
- Drawing Sheet P1.1.0 – Master Plumbing Plan – New Construction
- Drawing Sheet P1.1.1 – Partial Plumbing Plan – New Construction
- Drawing Sheet P1.1.2 – Partial Plumbing Plan – New Construction

END OF ADDENDUM #1

LEGEND

- ASBESTOS FLOOR TILE AND MASTIC

GENERAL NOTES

A. CARPETING TO BE REMOVED BY OTHERS.
B. ABATEMENT CONTRACTOR SHALL REMOVE FLOOR TILE AND BLACK MASTIC WHERE SHOWN.
C. ABATEMENT CONTRACTOR SHALL REMOVE BLACK MASTIC WHERE SHOWN.
D. BASE MOLDING SHALL BE REMOVED.
E. OWNER WILL VERIFY QUANTITIES OF ADDITIONAL ASBESTOS FLOORING MATERIALS TO BE REMOVED.
F. CONTRACTOR SHALL VERIFY QUANTITIES OF ADDITIONAL WORK.
G. OTHER AREAS (NOT SPECIFICALLY DEPICTED) MAY CONTAIN ASBESTOS FLOORING MATERIALS. IF FOUND PRESENT UPON REMOVAL OF EXISTING CARPET, MATERIALS WILL BE QUANTIFIED PRIOR TO ABATEMENT USING PRICING.

NOT TO SCALE

AMERECO, INC.
CONSULTING ENGINEERS-PROJECT MANAGERS
54 MICHIGAN AVENUE
VALPARAISO, IN 46383 219-531-0531

NO.	REVISION	BY	DATE

DRAWN: D. SHARP
DESIGNED: J. RUGG
APPRV'D:
DATE: JAN. 31, 2025
PROJECT NUMBER: 25.2454

INSPECTION SITE PLAN

PRE RENOVATION ACM SURVEY
JOHN WOOD ELEMENTARY SCHOOL
MERRILLVILLE INDIANA

SHEET 1 OF 1
FIGURE 1

SECTION 10 2813

TOILET ACCESSORIES

PART 1 GENERAL

1.01 SECTION INCLUDES

A. Furnish all labor, materials, and equipment necessary to complete all toilet accessories as called for on the Drawings and herein specified.

1.02 SUBMITTALS

A. Submit product data under provisions of Division 1.

B. Provide product data on accessories describing size, finish, details of function, attachment methods.

C. Submit manufacturer's installation instructions under provisions of Division 1.

1.03 KEYING

A. Supply keys for each accessory to Owner.

1.04 REGULATORY REQUIREMENTS

A. Conform to applicable codes for installing work in conformance with ANSI A117.1.

1.05 SEQUENCING AND SCHEDULING

A. Coordinate the work of this Section with the placement of internal wall reinforcement and reinforcement of toilet partitions to receive anchor attachments.

PART 2

2.01 MANUFACTURERS - ACCEPTABLE MANUFACTURERS OFFERING EQUAL PRODUCTS HEREIN SPECIFIED:

A. Bradley

B. Bobrick

C. McKinnley Parker

D. ASI

2.02 PRODUCTS

A. See toilet accessory schedule on drawings.

B. Mirrors: Bradley Model 780 mirror in sizes as shown on drawings.

C. Grab Bars: Bradley Model 8120, Standard Stainless Steel Finish: Size as shown on the Drawings; provide tamper proof type mounting kits and anchoring devices appropriate for type of wall construction.

D. Substitutions: Under provisions of Division 1.

2.03 FABRICATION

A. Fabricate all toilet accessories of Type 304 stainless steel, satin finish, unless otherwise noted.

B. Furnish all fastening devices, including screws, bolts, anchors, and back plates. Match exposed portions of fastening devices with that of accessories.

PART 3 EXECUTION

3.01 EXAMINATION

A. Verify that site conditions are ready to receive work and dimensions are as indicated on shop drawings.

B. Beginning of installation means acceptance of existing conditions.

3.02 PREPARATION

A. Deliver inserts and rough-in frames to site at appropriate time for building-in.

B. Provide templates and rough-in measurements as required.

C. Verify exact location of accessories for installation.

3.03 INSTALLATION

A. Provide steel anchor plates, adapters and anchor components required for installation by manufacturer.

B. Install fixtures, accessories and items in accordance with manufacturers' instructions.

C. Install plumb and level, securely and rigidly anchored to substrate in accordance ADA Requirements.

END OF SECTION

SECTION 22 1000

PLUMBING

PART 1 GENERAL

1.01 WORK INCLUDED

A. Furnish all labor materials and equipment necessary to furnish and install all plumbing work shown on the drawings.

B. Whether specifically called for or not, all work and systems shall be complete in every respect with this Contractor furnishing all items required to complete the work and leaving same in first class working condition fully guaranteed against defective materials and workmanship.

C. Whether specifically shown or not, all plumbing and sanitary work shall be done in strict accordance with the governing rules, regulations, building codes and/or rules of the affected utility companies.

D. Furnish all permits and pay all fees as may be required including any excessive length charges and all federal or state taxes.

1.02 QUALITY ASSURANCE

A. All work shall be in full accordance with the Indiana Plumbing Code.

B. All work shall be warranted for a period of one year from Date of Final Acceptance of building.

1.03 DISINFECTION OF WATER DISTRIBUTION SYSTEM

A. Upon completion of all testing and closure of leaks, water system shall be sterilized in accordance with the requirements of the State Board of Health. Furnish copy of Sterilization Test Results.

1.04 PLUMBING PIPING

A. Work Included

1. Water pipe and pipe fittings
2. Valves
3. Sanitary sewer piping system

B. Piping General

1. All piping materials shall be new and or American manufacture. Full lengths of pipe shall be used as much as possible.

C. Domestic Water Piping

1. Above grade: Type L hard drawn copper sweated or flanged of sizes as shown of the plans except for water service pipe before meter.

D. Valves

1. All valves shall be equal to Watts – FBV Series ball valves bronze 2 piece.

2. All ball valves for plumbing piping system shall be Watts, NIBCO, Milwaukee.

3. All valves be full port, 100% flow of piping.

4. Each branch from the main piping shall have a valve.

5. Tag all valves for system type (i.e. Hot Water, etc.).

E. Sanitary Sewer Piping

1. Below grade:

a. Within building: all sanitary and waste piping within the building and to 5'-0" beyond the building exterior wall shall be PVC Schedule 40

b. Beyond building wall: all sanitary and waste piping beyond 5'-0" of the exterior walls shall be PVC Schedule 40 or as required by the local governing body.

2. Above grade: waste and vent lines above grade shall be PVC Schedule 40

1.05 EXCAVATION AND BACKFILLING

A. This contractor shall do all necessary excavation, trenching and backfilling as required for this work.

B. Bottom of excavations shall be true to grade so that pipes will be supported on a solid bed of undisturbed earth.

C. The sides of all trenches shall be properly protected against cave-ins. Trenches shall be of proper width and depth for piping required.

D. No clay material shall be used for backfilling within building or under any walks or paving.

E. All backfilling within building or under any walks or paving shall be with clean sand in maximum 6" lifts properly compacted to 95% density and free from any frozen materials.

F. No piping trenches shall be backfilled until all required tests have been performed and until all inspections have been made.

G. Contractor shall provide and maintain any barricades or protective devices at any open excavations until properly backfilled to grade.

1.06 INSTALLATION OF PIPING AND EQUIPMENT

A. Sanitary and Water Piping

1. Piping must be run so as not to interfere with work of other trades. Where offsets are necessary to avoid other work, same shall be made as directed by the Architect.

2. All changes in direction of soil and waste piping shall be made with long sweep fittings where space permits.

3. Off-sets to be made with 45 degree fittings making due allowance for expansion.

4. Horizontal sewer lines shall pitch a minimum of 1/8" per foot outside building.

5. Provide cleanouts with brass clean-out screw at every turn and angle on all soil and waste piping and install cleanouts every 50 to 60 feet in straight runs, depending on building conditions. Keep cleanouts out of passageways as much as possible.

6. Cleanouts shall also be installed at the base of all risers where they connect to horizontal runs.

7. The plans show the general arrangement of all pipes, ductwork, conduits, fixtures, etc. Contractor shall make all necessary adjustments.

8. The contractor shall examine the drawings and specifications very carefully and notify the Architect by letter of any discrepancies so same can be rectified at an early date.

9. Contractor shall follow the plans as closely as possible for installation of piping.

10. Use proper solvent, cleaner and sandpaper for all PVC fittings and connections, properly twisting all pipe to "set".

11. Furnish to General Contractor all sleeves one pipe size larger for all piping passing through walls or floors and locate height, width and location where sleeve should be placed.

12. Cleanouts

    a. Cleanouts on sewers under floor shall be made with "Y's". Extension shall be brought up to floor level and capped with brass cleanout screw.

    b. Cleanouts in finished floors shall be installed in brass cleanout boxes with flush covers of approved type. Use Wade #W-81 OOF., or equal of Zurn, Josam or J.R. Smith. All cleanouts shall be located in readily accessible locations for easy removal. In finished areas covers wall clean outs shall be chrome plated.

13. Pipe Hangers

a. All pipe lines shall be supported on adjustable hangers on not over 8 ft. centers for 1/2" through 1" pipe, 10 ft. centers for 1-1/4" through 3" pipe, and 12 ft. centers for 4"pipe and up.

b. All vertical pipes shall be supported at least once in each story height with clamps. Riser clamps to be Elcen Fig. #39.

c. All pipe hangers for hot, cold piping to be insulated shall be Elcen Fig. #12 with Fig. #221 through #226 saddles as required for hot piping. For cold piping use Elcen Fig. #240A saddles.

d. Beam clamps shall be Elcen Fig. #33.

e. Size of pipe hanger rods shall be 1/4" pipes up to 2", 3/8" for pipes 2-1/2" to 3", and 1/2" for pipes 4" and larger.

f. Where supporting copper piping use copper plated clamps, rods and hangers, same as above.

g. Trapeze hangers shall be Crawford Fig. #45.

h. Install inserts in concrete construction for each pipe hanger. Single inserts shall be Crawford Fig. #282, group inserts shall be Crawford Fig. #148.

i. Hangers and inserts shall be as manufactured by Elcen, Crawford, Grinnell or Blaw Knox.

14. Plates

a. Where pipes pass exposed though finished walls, partitions or ceilings provide chrome plated cover plates, Crane #20. Use Fee and Mason #2840 on pipes projecting above the floor.

15. Vent Lines and Flashing

a. All vents to extend 12" above the roof line and be provided with regular roof connection to receive flashing made for this purpose.

b. Flash properly down on roof using 6 lb. sheet lead extending 12" on all sides of pipe and make the connection watertight.

c. Off-set pipes away from parapet wall to permit flashing 12" from wall.

16. Traps

a. Each fixture, floor drain, and all pieces of equipment requiring trap except fixtures with integral traps shall be separately trapped.

b. The traps shall be placed as near to the fixture as possible, and no fixture shall be double trapped.

17. Water Piping

a. All hot and cold water piping shall pitch up from headers and be so arranged as to be drained in pipe chase. Provide threaded drainage plugs.

b. Gate valves shall be installed in all branch connections from the hot and cold water mains.

c. Unions to be installed at all connections to equipment and at all automatic valves.

18. Pipe Cleaning

a. Water piping: Inside of all lines shall be blown out with compressed air and flushed with detergent solution and rinsed with clean water prior to testing for leaks.

b. All sewer lines shall be flushed with water and shall flow freely.

c. Outside of all lines inside of building shall be cleaned to remove all grease, oil, pipe compound, plaster, mortar, etc. after lines have been successfully tested so as to facilitate pipe covering and painting.

19. Pipe Testing

a. Water piping shall be tested with compressed air at a pressure of 150% normal working pressure or at 100 psi, which-ever is greater.

b. Waste, soil and vent piping shall be tested by capping opening and filling the entire system with water.

c. All test shall be conducted for a period of 90 minutes or if system tightness is questionable, Architect may request an extended test period at no additional cost to the Owner.

d. Any defects which develop during all piping test shall be remedied. Send letter in triplicate to the Engineer giving results of all tests.

1.07 PLUMBING FIXTURES

A. Fixtures shall be new, free from defects and as listed in the Plumbing Fixture Schedule on the plans. All fixtures shall be set plumb, true and secure. Provide all chrome plated traps, supplies and hangers or carriers. Provide data to General contractor for location of all blocking within walls for supports.

B. The Following Fixtures are as Listed Below

1. Floor drains: Zurn ZN-415 cast iron floor drain. Provide nickel bronze drain in finished areas and rough brass drain and cleanout in unfinished areas (Janitor's Closets or Storage Rooms). Pitch floor to drains minimum 1/8" per foot. Provide 4” PVC trap below floor drain.

C. Provide submittals as called for in Division 1.

1.08 INSULATION

A. Provide insulated pipe covers on exposed piping below all wall hung lavatories and sinks per code.

B. Insulate all horizontal domestic cold water piping above suspended ceilings.

B. Insulate all domestic hot water piping above concrete floors on grade

C. Domestic water pipe insulation shall be ½" thick fiberglass with vapor barrier and PVC fittings for water piping ½" – 1 ½" in diameter.

D. Domestic water pipe insulation shall be 1" thick fiberglass with vapor barrier and PVC fittings for water piping 2" in diameter and above.

1.09 RECORD DRAWINGS

A. Provide as-built piping layout to Architect for inclusion on his Record Drawings noting any deviations from plans. This must be provided before progress payments are made.

1.10 WARRANTY

A. Provide minimum 1 year full warranty from date of final acceptance of building.

1.11 CLEAN-UP

A. This contractor shall remove all debris and wrappings at the end of each day's work and shall keep the areas as neat as possible at all times. Remove all left over materials.

END OF SECTION

PHASE #2
FINISH RENOVATIONS
AT
JOHN WOOD ELEMENTARY SCHOOL
6100 EAST 73RD AVENUE
MERRILLVILLE, INDIANA 46410

BOARD OF PARKS AND RECREATION

JUDY DUNLAP	PRESIDENT
JAMES DONOHUE	VICE PRESIDENT
DELENA THOMAS	SECRETARY
BOB KRAUSE	MEMBER
ALEX DUNLAP III	MEMBER

ADMINISTRATION

NICK BROWN	SUPERINTENDENT
MEGHAN DAMRON	CHIEF FINANCIAL OFFICER
GREG GRIFFITH	DIRECTOR OF MAINTENANCE SERVICES

GENERAL NOTES

1. WATER SERVICE IS NEW & EXISTING.
2. SEWER SERVICE IS NEW & EXISTING.
3. GAS IS NEW & EXISTING.
4. ELECTRIC IS NEW & EXISTING.

5. WHETHER HEREIN STATED OR NOT, ALL WORK SHALL BE IN FULL ACCORDANCE WITH THE RULES AND REGULATIONS OF THE INDIANA DEPARTMENT OF FIRE PREVENTION AND BUILDING SAFETY AND ALL OTHER APPLICABLE LAWS, CODES, ORDINANCES, RULES AND REGULATIONS.

6. ALL CONSTRUCTION SHALL BE IN FULL ACCORDANCE WITH THE BUILDING SAFETY REGULATIONS AS PROMULGATED BY THE INDIANA DIVISION OF LABOR. CONTRACTOR(S) SHALL ASSUME FULL RESPONSIBILITY FOR THE ENFORCEMENT OF ANY INFRACTIONS OF SUCH RULES AND REGULATIONS.

7. ALL ELECTRIC WORK SHALL BE IN FULL ACCORDANCE WITH THE NATIONAL ELECTRIC CODE.

8. UNLESS OTHERWISE SPECIFIED ALL WORK SHALL BE GOVERNED BY THE CURRENT STANDARD A.I.A. DOCUMENT A201, GENERAL CONDITIONS OF THE CONTRACT FOR CONSTRUCTION, 2009 EDITION.

9. THE LOCATIONS OF UNDERGROUND UTILITIES AS SHOWN HEREON ARE BASED ON ABOVE GROUND STRUCTURES. LOCATIONS OF UNDERGROUND UTILITIES/STRUCTURES MAY VARY FROM LOCATIONS SHOWN HEREON. ADDITIONAL BURIED UTILITIES/ STRUCTURES MAY BE ENCOUNTERED. ALL UTILITY LOCATIONS SHALL BE FIELD VERIFIED BY THE APPROPRIATE UTILITY COMPANY OR THEIR LOCATION SERVICE PRIOR TO CONSTRUCTION. I HEREBY CERTIFY THAT THESE PLANS WERE PREPARED BY ME AND UNDER MY DIRECT SUPERVISION AND TO THE BEST OF MY KNOWLEDGE ARE IN ACCORDANCE WITH THE RULES AND REGULATIONS OF THE INDIANA DEPARTMENT OF FIRE PREVENTION AND BUILDING SAFETY.

THOMAS E. KUHN — IND. REG. #19500131

© CSK ARCHITECTS, P.C. THESE PLANS ARE THE PROPERTY OF CSK ARCHITECTS, P.C., AND SHALL NOT BE DUPLICATED OR REPRODUCED WITHOUT WRITTEN AUTHORIZATION FROM CSK ARCHITECTS, P.C. ANY UNAUTHORIZED DUPLICATION OR REPRODUCTION IS IN VIOLATION OF FEDERAL COPYRIGHT LAWS AND MAY BE PUNISHED TO THE FULLEST EXTENT ALLOWED BY LAW.

SHEET INDEX

SHEET NUMBER	SHEET TITLE
TITLE	TITLE SHEET, SHEET INDEX & GENERAL NOTES
ARCHITECTURAL	
A 1.0.0	MASTER FLOOR PLAN – DEMOLITION
A 1.0.1	PARTIAL FLOOR PLAN – AREA A – DEMOLITION
A 1.0.2	PARTIAL FLOOR PLAN – AREA B – DEMOLITION
A 1.0.3	PARTIAL FLOOR PLAN – AREA C – DEMOLITION
A 1.0.4	PARTIAL FLOOR PLAN – AREA D – DEMOLITION
A 1.0.5	PARTIAL FLOOR PLAN – AREA D – DEMOLITION
A 1.1.0	MASTER FLOOR PLAN – NEW CONSTRUCTION
A 1.1.1	PARTIAL FLOOR PLAN – AREA A – NEW CONSTRUCTION
A 1.1.2	PARTIAL FLOOR PLAN – AREA B – NEW CONSTRUCTION
A 1.1.3	PARTIAL FLOOR PLAN – AREA C – NEW CONSTRUCTION
A 1.1.4	PARTIAL FLOOR PLAN – AREA D – NEW CONSTRUCTION
A 1.1.5	PARTIAL FLOOR PLAN – AREA D – NEW CONSTRUCTION
A 2.0.0	MASTER REFLECTED CEILING PLAN – NEW CONSTRUCTION
A 2.1.0	PARTIAL REFLECTED CEILING PLAN – NEW CONSTRUCTION
A 7.1.0	INTERIOR ELEVATIONS
A 7.1.1	INTERIOR ELEVATIONS
A 7.1.2	INTERIOR ELEVATIONS
A 7.1.3	INTERIOR ELEVATIONS
A 7.1.4	INTERIOR ELEVATIONS & ROOM FINISH SCHEDULE
A 7.1.5	WALL FINISH PLAN
A 9.1.0	MASTER FLOOR FINISH PLAN
A 9.1.1	PARTIAL FLOOR FINISH PLAN – AREA A
A 9.1.2	PARTIAL FLOOR FINISH PLAN – AREA B
A 9.1.3	PARTIAL FLOOR FINISH PLAN – AREA C
A 9.1.4	PARTIAL FLOOR FINISH PLAN – AREA D
PLUMBING	
P 1.1.0	MASTER PLUMBING PLAN – NEW CONSTRUCTION
P 1.1.1	PARTIAL PLUMBING PLAN – NEW CONSTRUCTION
P 1.1.2	PARTIAL PLUMBING PLAN – NEW CONSTRUCTION

THOMAS E. KUHN REGISTERED ARCHITECT AR 19500131 STATE OF INDIANA

DATE
01-29-2026
1 02-09-2026

PHASE #2 OF FINISH RENOVATIONS AT
JOHN WOOD ELEMENTARY SCHOOL
6100 E 73rd AVE
MERRILLVILLE, IN, 46410

CSK ARCHITECTS, P.C.
6919 W. LINCOLN HIGHWAY
219-322-5950
CROWN POINT, IN 46307
www.cskarchitects.com

25058

SHEET
TITLE

x:\merrillville schools\25058 classroom renovation wood_phase 2\Drawings\TITLE.dwg

GENERAL FLOOR PLAN NOTES - DEMOLITION

1. FIELD VERIFY ALL EXISTING DIMENSIONS AND CONDITIONS PRIOR TO CONSTRUCTION.
2. CONTRACTOR IS RESPONSIBLE FOR REMOVAL OF ALL DEMOLITION MATERIAL AND PLACING IN DUMPSTER DURING THE DURATION OF THE CONSTRUCTION PROJECT.
3. CONTRACTOR MUST REPAIR ALL SURFACES AFFECTED BY DEMOLITION. MATCH AND PATCH AS REQUIRED.
4. ALL LOOSE FURNISHING AND EQUIPMENT WILL BE RELOCATED BY OWNER.
5. EXISTING ASBESTOS CONTAINING FLOOR TILE AND MASTIC SHALL BE REMOVED BY OTHERS/OWNER.
6. ALL WALL MOUNTED ACCESSORIES SHALL REMAIN.
7. ALL OF THE FLOOR PLAN DEMOLITION NOTES LISTED MAY NOT APPEAR ON EACH INDIVIDUAL PROJECT DEMOLITION PLAN.
8. ABATEMENT CONTRACTOR SHALL REMOVAL BLACK MASTIC WHERE SHOWN
9. OTHER AREAS (NOT SPECIFICALLY DEPICTED) MAY CONTAIN ASBESTOS FLOORING MATERIALS. IF FOUND PRESENT UPON REMOVAL OF EXISTING CARPET, MATERIALS WILL BE QUANTIFIED PRIOR TO ABATEMENT USING PRICING.

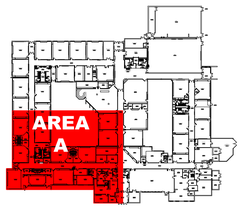

KEY PLAN

SCALE: NTS

PLAN NORTH

KEY FLOOR PLAN NOTES - DEMOLITION:

1. EXISTING FLOORING & EXISTING WALL BASE SHALL REMAIN – PREP WALL FOR NEW FINISHES & PROVIDE PROTECTION FOR THE EXISTING FLOORING.
2. REMOVE EXISTING CARPETING & EXISTING WALL BASE. PATCH & PREP FLOORS & WALLS TO RECEIVE NEW FINISHES.
3. EXISTING FLOORING SHALL BE REMOVED BY OTHERS. GENERAL CONTRACTOR SHALL REMOVE THE EXISTING WALL BASE & PREP WALL FOR NEW WALL FINISH.
4. REMOVE EXISTING VCT TILE & WALL BASE. REMOVE EXISTING WALL BASE & PREP WALL FOR NEW WALL FINISH.
5. EXISTING DOOR SHALL BE REMOVED FROM OFF FRAME, SALVAGE & PROTECT DOOR; DOOR FRAME SHALL HAVE EXISTING PAINT CHEMICALLY STRIPPED OFF.
   – REFER TO PAINT SPECIFICATION FOR STRIPPING PROCESS.
6. EXISTING DOOR, THIS DOOR INCLUDES A WINDOW LITE–KIT WITHIN IT. REMOVE DOOR FROM OFF FRAME, SALVAGE & PROTECT DOOR; DOOR FRAME SHALL HAVE EXISTING PAINT CHEMICALLY STRIPPED OFF – REFER TO PAINT SPECIFICATION FOR STRIPPING PROCESS.
7. EXISTING DOOR, THIS DOOR INCLUDES A LITE–KIT WITHIN IT & HAS A SIDELITE WINDOW. THE DOOR SHALL BE REMOVED FROM OFF FRAME, SALVAGE & PROTECT DOOR; THE DOOR FRAME & SIDELITE FRAME SHALL HAVE EXISTING PAINT CHEMICALLY STRIPPED OFF OF THEM.
   – REFER TO PAINT SPECIFICATION FOR STRIPPING PROCESS.
8. EXISTING WINDOW SHALL REMAIN – THE WINDOW FRAME SHALL HAVE EXISTING PAINT CHEMICALLY STRIPPED OFF OF IT – REFER TO PAINT SPECIFICATION FOR STRIPPING PROCESS.
9. EXISTING FLOOR & WALL FINISHES SHALL REMAIN – AREA OF SCHOOL NOT IN SCOPE OF WORK.
10. EXISTING DOOR SHALL REMAIN – DOOR IS NOT IN SCOPE OF WORK.
11. EXISTING DOOR SHALL BE REMOVED, SALVAGE & PROTECT; DOOR FRAME SHALL REMAIN AND HAVE EXISTING PAINT CHEMICALLY STRIPPED OFF. DOOR SHALL BE TRIMMED IF REQUIRED FOR NEW FLOOR FINISH HEIGHT.
    – REFER TO PAINT SPECIFICATION FOR STRIPPING PROCESS.
12. EXISTING ALUMINUM WINDOWS SHALL REMAIN. THESE WINDOWS WILL NOT RECEIVE NEW PAINT FINISH.
13. EXISTING ALUMINUM DOOR & HARDWARE SHALL REMAIN. THESE DOORS & FRAMES WILL NOT RECEIVE NEW PAINT FINISH.
14. EXISTING WALL MOUNTED UNIT HEATER SHALL REMAIN AND SHALL NOT RECEIVE PAINT.
15. EXISTING WALL MOUNTED ACCESSORIES SHALL REMAIN – PROTECT ACCESSORIES WHILE PAINTING.
16. EXISTING CASEWORK SHALL REMAIN. REMOVE EXISTING VINYL BASE ON CASEWORK.
17. REMOVE EXISTING FLOOR MOUNTED BENCH COMPLETELY
18. EXISTING FLOOR SHALL REMAIN. REMOVE EXISTING VINYL BASE. PROTECT FLOORING AND PREP WALL FOR NEW FINISH.
19. EXISTING FLOORING SHALL REMAIN. PREP FLOOR TO RECEIVE NEW CARPET FINISH INSTALLED OVER EXISTING. PREP WALL FOR NEW FINISHES.
20. REMOVE EXISTING CERAMIC WALL TILE COMPLETELY. PREP WALL FOR NEW TILE FINISH.
21. EXISTING DISPLAY CASE SHALL REMAIN. DISPLAY FRAME SHALL NOT BE PAINTED.
22. EXISTING DISPLAY CASE WITH WOOD TRIM SHALL REMAIN. PREP TRIM FOR NEW FINISH.
23. REMOVE EXISTING BATHROOM PARTITIONS.
24. EXISTING WATER FOUNTAIN SHALL BE REMOVED AND SALVAGED.
25. REMOVE EXISTING WATER FOUNTAIN PREP LINES FOR NEW FIXTURE
    – REFER TO PLUMBING PLANS
26. EXISTING WATER FOUNTAIN SHALL BE REMOVED. REMOVE MASONRY AS REQUIRED FOR NEW FIXTURES HEIGHT – PREP AND CLEAN WALLS.
    – REFER TO PLUMBING PLAN
27. REMOVE EXISTING ROLLING CONCESSION DOOR COMPLETELY. PREP WALL FOR NEW MASONRY.
    – REFER TO PARTIAL FLOOR PLAN ON SHEET A1.1.5 FOR MORE DETAILS.
28. ALL EXISTING PLUMBING FIXTURES ARE TO BE REMOVED AND SALVAGED.
    – REFER TO PLUMBING PLAN
29. ALTERNATE BID #1: EXISTING FLOOR SHALL REMAIN; REMOVE EXISITNG VINYL BASE & PREP WALLS TO RECEIVE NEW FINISH. PROTECT THE EXISTING FLOOR.
30. ALTERNATE BID #1 REMOVE & SALVAGE EXISTING WALL MOUNTED PADDING.
31. ALTERNATE BID #1 EXISTING DOOR SHALL BE REMOVED FROM OFF FRAME, SALVAGE & PROTECT DOOR; DOOR FRAME SHALL HAVE EXISTING PAINT CHEMICALLY STRIPPED OFF.
    – REFER TO PAINT SPECIFICATION FOR STRIPPING PROCESS.
32. REMOVE ALL EXISTING BATHROOM ACCESSORIES
33. ALL EXISTING BATHROOM ACCESSORIES SHALL REMAIN

PARTIAL FLOOR PLAN - AREA A

DEMOLITION

SCALE: 1/8" = 1'–0"

PLAN NORTH

x:\merrillville schools\25058 classroom renovation wood_phase 2\Drawings\a100 floorplan.dwg

THOMAS E. KOHN REGISTERED AP 19500131 STATE OF INDIANA ARCHITECT

DATE
01-29-2026
1 02-09-2026

PHASE #2 OF FINISH RENOVATIONS AT
JOHN WOOD ELEMENTARY SCHOOL
6100 E 73rd AVE
MERRILLVILLE, IN, 46410

CSK ARCHITECTS, P.C.
CROWN POINT, IN 46307
www.cskarchitects.com
6919 W. LINCOLN HIGHWAY
219-322-5950

25058

SHEET
A
1.0.1

GENERAL FLOOR PLAN NOTES - DEMOLITION

1. FIELD VERIFY ALL EXISTING DIMENSIONS AND CONDITIONS PRIOR TO CONSTRUCTION.
2. CONTRACTOR IS RESPONSIBLE FOR REMOVAL OF ALL DEMOLITION MATERIAL AND PLACING IN DUMPSTER DURING THE DURATION OF THE CONSTRUCTION PROJECT.
3. CONTRACTOR MUST REPAIR ALL SURFACES AFFECTED BY DEMOLITION. MATCH AND PATCH AS REQUIRED.
4. ALL LOOSE FURNISHING AND EQUIPMENT WILL BE RELOCATED BY OWNER.
5. EXISTING ASBESTOS CONTAINING FLOOR TILE AND MASTIC SHALL BE REMOVED BY OTHERS/OWNER.
6. ALL WALL MOUNTED ACCESSORIES SHALL REMAIN.
7. ALL OF THE FLOOR PLAN DEMOLITION NOTES LISTED MAY NOT APPEAR ON EACH INDIVIDUAL PROJECT DEMOLITION PLAN.
8. ABATEMENT CONTRACTOR SHALL REMOVAL BLACK MASTIC WHERE SHOWN
9. OTHER AREAS (NOT SPECIFICALLY DEPICTED) MAY CONTAIN ASBESTOS FLOORING MATERIALS. IF FOUND PRESENT UPON REMOVAL OF EXISTING CARPET, MATERIALS WILL BE QUANTIFIED PRIOR TO ABATEMENT USING PRICING.

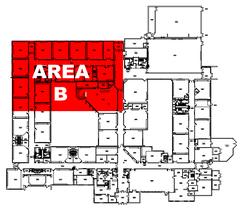

KEY PLAN
SCALE: NTS
PLAN NORTH

KEY FLOOR PLAN NOTES - DEMOLITION:

1. EXISTING FLOORING & EXISTING WALL BASE SHALL REMAIN – PREP WALL FOR NEW FINISHES & PROVIDE PROTECTION FOR THE EXISTING FLOORING.
2. REMOVE EXISTING CARPETING & EXISTING WALL BASE. PATCH & PREP FLOORS & WALLS TO RECEIVE NEW FINISHES.
3. EXISTING FLOORING SHALL BE REMOVED BY OTHERS. GENERAL CONTRACTOR SHALL REMOVE THE EXISTING WALL BASE & PREP WALL FOR NEW WALL FINISH.
4. REMOVE EXISTING VCT TILE & WALL BASE. REMOVE EXISTING WALL BASE & PREP WALL FOR NEW WALL FINISH.
5. EXISTING DOOR SHALL BE REMOVED FROM OFF FRAME, SALVAGE & PROTECT DOOR; DOOR FRAME SHALL HAVE EXISTING PAINT CHEMICALLY STRIPPED OFF.
   – REFER TO PAINT SPECIFICATION FOR STRIPPING PROCESS.
6. EXISTING DOOR, THIS DOOR INCLUDES A WINDOW LITE–KIT WITHIN IT. REMOVE DOOR FROM OFF FRAME, SALVAGE & PROTECT DOOR; DOOR FRAME SHALL HAVE EXISTING PAINT CHEMICALLY STRIPPED OFF – REFER TO PAINT SPECIFICATION FOR STRIPPING PROCESS.
7. EXISTING DOOR, THIS DOOR INCLUDES A LITE–KIT WITHIN IT & HAS A SIDELITE WINDOW. THE DOOR SHALL BE REMOVED FROM OFF FRAME, SALVAGE & PROTECT DOOR; THE DOOR FRAME & SIDELITE FRAME SHALL HAVE EXISTING PAINT CHEMICALLY STRIPPED OFF OF THEM.
   – REFER TO PAINT SPECIFICATION FOR STRIPPING PROCESS.
8. EXISTING WINDOW SHALL REMAIN – THE WINDOW FRAME SHALL HAVE EXISTING PAINT CHEMICALLY STRIPPED OFF OF IT – REFER TO PAINT SPECIFICATION FOR STRIPPING PROCESS.
9. EXISTING FLOOR & WALL FINISHES SHALL REMAIN – AREA OF SCHOOL NOT IN SCOPE OF WORK.
10. EXISTING DOOR SHALL REMAIN – DOOR IS NOT IN SCOPE OF WORK.
11. EXISTING DOOR SHALL BE REMOVED, SALVAGE & PROTECT; DOOR FRAME SHALL REMAIN AND HAVE EXISTING PAINT CHEMICALLY STRIPPED OFF. DOOR SHALL BE TRIMMED IF REQUIRED FOR NEW FLOOR FINISH HEIGHT.
    – REFER TO PAINT SPECIFICATION FOR STRIPPING PROCESS.
12. EXISTING ALUMINUM WINDOWS SHALL REMAIN. THESE WINDOWS WILL NOT RECEIVE NEW PAINT FINISH.
13. EXISTING ALUMINUM DOOR & HARDWARE SHALL REMAIN. THESE DOORS & FRAMES WILL NOT RECEIVE NEW PAINT FINISH.
14. EXISTING WALL MOUNTED UNIT HEATER SHALL REMAIN AND SHALL NOT RECEIVE PAINT.
15. EXISTING WALL MOUNTED ACCESSORIES SHALL REMAIN – PROTECT ACCESSORIES WHILE PAINTING.
16. EXISTING CASEWORK SHALL REMAIN. REMOVE EXISTING VINYL BASE ON CASEWORK.
17. REMOVE EXISTING FLOOR MOUNTED BENCH COMPLETELY
18. EXISTING FLOOR SHALL REMAIN. REMOVE EXISTING VINYL BASE. PROTECT FLOORING AND PREP WALL FOR NEW FINISH.
19. EXISTING FLOORING SHALL REMAIN. PREP FLOOR TO RECEIVE NEW CARPET FINISH INSTALLED OVER EXISTING. PREP WALL FOR NEW FINISHES.
20. REMOVE EXISTING CERAMIC WALL TILE COMPLETELY. PREP WALL FOR NEW TILE FINISH.
21. EXISTING DISPLAY CASE SHALL REMAIN. DISPLAY FRAME SHALL NOT BE PAINTED.
22. EXISTING DISPLAY CASE WITH WOOD TRIM SHALL REMAIN. PREP TRIM FOR NEW FINISH.
23. REMOVE EXISTING BATHROOM PARTITIONS.
24. EXISTING WATER FOUNTAIN SHALL BE REMOVED AND SALVAGED.
25. REMOVE EXISTING WATER FOUNTAIN PREP LINES FOR NEW FIXTURE
    – REFER TO PLUMBING PLANS
26. EXISTING WATER FOUNTAIN SHALL BE REMOVED. REMOVE MASONRY AS REQUIRED FOR NEW FIXTURES HEIGHT – PREP AND CLEAN WALLS.
    – REFER TO PLUMBING PLAN
27. REMOVE EXISTING ROLLING CONCESSION DOOR COMPLETELY. PREP WALL FOR NEW MASONRY.
    – REFER TO PARTIAL FLOOR PLAN ON SHEET A1.1.5 FOR MORE DETAILS.
28. ALL EXISTING PLUMBING FIXTURES ARE TO BE REMOVED AND SALVAGED.
    – REFER TO PLUMBING PLAN
29. ALTERNATE BID #1: EXISTING FLOOR SHALL REMAIN; REMOVE EXISITNG VINYL BASE & PREP WALLS TO RECEIVE NEW FINISH. PROTECT THE EXISTING FLOOR.
30. ALTERNATE BID #1 REMOVE & SALVAGE EXISTING WALL MOUNTED PADDING.
31. ALTERNATE BID #1 EXISTING DOOR SHALL BE REMOVED FROM OFF FRAME, SALVAGE & PROTECT DOOR; DOOR FRAME SHALL HAVE EXISTING PAINT CHEMICALLY STRIPPED OFF.
    – REFER TO PAINT SPECIFICATION FOR STRIPPING PROCESS.
32. REMOVE ALL EXISTING BATHROOM ACCESSORIES
33. ALL EXISTING BATHROOM ACCESSORIES SHALL REMAIN

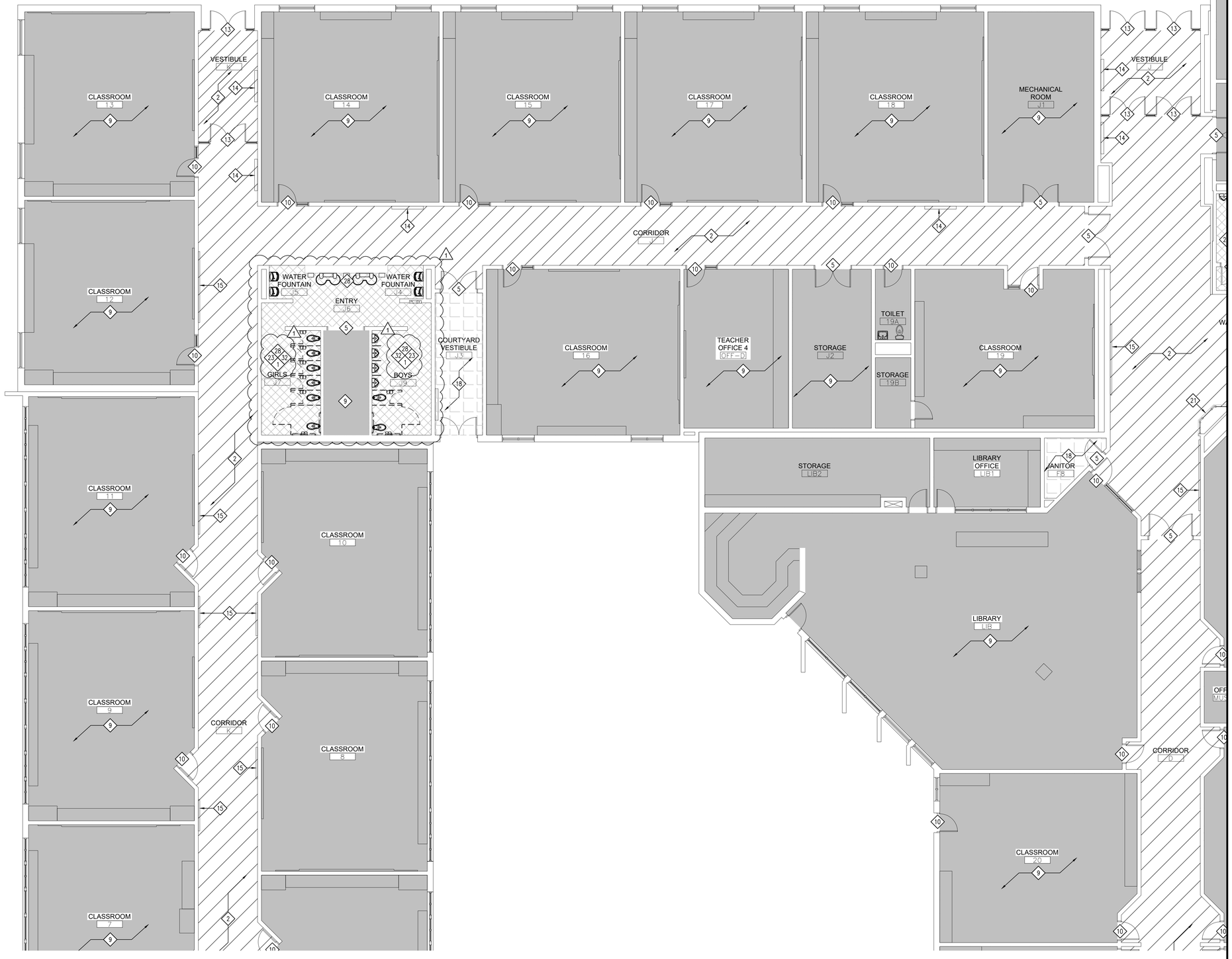

PARTIAL FLOOR PLAN - AREA B
NEW CONSTRUCTION
SCALE: 1/8" = 1'–0"
PLAN NORTH

x:\merrillville schools\25058 classroom renovation wood_phase 2\Drawings\a100 floorplan.dwg

THOMAS E. KOHN
REGISTERED
AP 19600131
STATE OF INDIANA
ARCHITECT

DATE
01-29-2026
1 02-09-2026

PHASE #2 OF FINISH RENOVATIONS AT
JOHN WOOD ELEMENTARY SCHOOL
6100 E 73rd AVE
MERRILLVILLE, IN, 46410

CSK ARCHITECTS, P.C.
CROWN POINT, IN 46307
www.cskarchitects.com
6919 W. LINCOLN HIGHWAY
219-322-5950

25058

SHEET
A
1.0.2

GENERAL FLOOR PLAN NOTES - DEMOLITION

1. FIELD VERIFY ALL EXISTING DIMENSIONS AND CONDITIONS PRIOR TO CONSTRUCTION.
2. CONTRACTOR IS RESPONSIBLE FOR REMOVAL OF ALL DEMOLITION MATERIAL AND PLACING IN DUMPSTER DURING THE DURATION OF THE CONSTRUCTION PROJECT.
3. CONTRACTOR MUST REPAIR ALL SURFACES AFFECTED BY DEMOLITION. MATCH AND PATCH AS REQUIRED.
4. ALL LOOSE FURNISHING AND EQUIPMENT WILL BE RELOCATED BY OWNER.
5. EXISTING ASBESTOS CONTAINING FLOOR TILE AND MASTIC SHALL BE REMOVED BY OTHERS/OWNER.
6. ALL WALL MOUNTED ACCESSORIES SHALL REMAIN.
7. ALL OF THE FLOOR PLAN DEMOLITION NOTES LISTED MAY NOT APPEAR ON EACH INDIVIDUAL PROJECT DEMOLITION PLAN.
8. ABATEMENT CONTRACTOR SHALL REMOVAL BLACK MASTIC WHERE SHOWN
9. OTHER AREAS (NOT SPECIFICALLY DEPICTED) MAY CONTAIN ASBESTOS FLOORING MATERIALS. IF FOUND PRESENT UPON REMOVAL OF EXISTING CARPET, MATERIALS WILL BE QUANTIFIED PRIOR TO ABATEMENT USING PRICING.

KEY PLAN

SCALE: NTS

PLAN NORTH

KEY FLOOR PLAN NOTES - DEMOLITION:

1. EXISTING FLOORING & EXISTING WALL BASE SHALL REMAIN – PREP WALL FOR NEW FINISHES & PROVIDE PROTECTION FOR THE EXISTING FLOORING.
2. REMOVE EXISTING CARPETING & EXISTING WALL BASE. PATCH & PREP FLOORS & WALLS TO RECEIVE NEW FINISHES.
3. EXISTING FLOORING SHALL BE REMOVED BY OTHERS. GENERAL CONTRACTOR SHALL REMOVE THE EXISTING WALL BASE & PREP WALL FOR NEW WALL FINISH.
4. REMOVE EXISTING VCT TILE & WALL BASE. REMOVE EXISTING WALL BASE & PREP WALL FOR NEW WALL FINISH.
5. EXISTING DOOR SHALL BE REMOVED FROM OFF FRAME, SALVAGE & PROTECT DOOR; DOOR FRAME SHALL HAVE EXISTING PAINT CHEMICALLY STRIPPED OFF.
   – REFER TO PAINT SPECIFICATION FOR STRIPPING PROCESS.
6. EXISTING DOOR, THIS DOOR INCLUDES A WINDOW LITE-KIT WITHIN IT. REMOVE DOOR FROM OFF FRAME, SALVAGE & PROTECT DOOR; DOOR FRAME SHALL HAVE EXISTING PAINT CHEMICALLY STRIPPED OFF – REFER TO PAINT SPECIFICATION FOR STRIPPING PROCESS.
7. EXISTING DOOR, THIS DOOR INCLUDES A LITE-KIT WITHIN IT & HAS A SIDELITE WINDOW. THE DOOR SHALL BE REMOVED FROM OFF FRAME, SALVAGE & PROTECT DOOR; THE DOOR FRAME & SIDELITE FRAME SHALL HAVE EXISTING PAINT CHEMICALLY STRIPPED OFF OF THEM.
   – REFER TO PAINT SPECIFICATION FOR STRIPPING PROCESS.
8. EXISTING WINDOW SHALL REMAIN – THE WINDOW FRAME SHALL HAVE EXISTING PAINT CHEMICALLY STRIPPED OFF OF IT – REFER TO PAINT SPECIFICATION FOR STRIPPING PROCESS.
9. EXISTING FLOOR & WALL FINISHES SHALL REMAIN – AREA OF SCHOOL NOT IN SCOPE OF WORK.
10. EXISTING DOOR SHALL REMAIN – DOOR IS NOT IN SCOPE OF WORK.
11. EXISTING DOOR SHALL BE REMOVED, SALVAGE & PROTECT; DOOR FRAME SHALL REMAIN AND HAVE EXISTING PAINT CHEMICALLY STRIPPED OFF. DOOR SHALL BE TRIMMED IF REQUIRED FOR NEW FLOOR FINISH HEIGHT.
    – REFER TO PAINT SPECIFICATION FOR STRIPPING PROCESS.
12. EXISTING ALUMINUM WINDOWS SHALL REMAIN. THESE WINDOWS WILL NOT RECEIVE NEW PAINT FINISH.
13. EXISTING ALUMINUM DOOR & HARDWARE SHALL REMAIN. THESE DOORS & FRAMES WILL NOT RECEIVE NEW PAINT FINISH.
14. EXISTING WALL MOUNTED UNIT HEATER SHALL REMAIN AND SHALL NOT RECEIVE PAINT.
15. EXISTING WALL MOUNTED ACCESSORIES SHALL REMAIN – PROTECT ACCESSORIES WHILE PAINTING.
16. EXISTING CASEWORK SHALL REMAIN. REMOVE EXISTING VINYL BASE ON CASEWORK.
17. REMOVE EXISTING FLOOR MOUNTED BENCH COMPLETELY
18. EXISTING FLOOR SHALL REMAIN. REMOVE EXISTING VINYL BASE. PROTECT FLOORING AND PREP WALL FOR NEW FINISH.
19. EXISTING FLOORING SHALL REMAIN. PREP FLOOR TO RECEIVE NEW CARPET FINISH INSTALLED OVER EXISTING. PREP WALL FOR NEW FINISHES.
20. REMOVE EXISTING CERAMIC WALL TILE COMPLETELY. PREP WALL FOR NEW TILE FINISH.
21. EXISTING DISPLAY CASE SHALL REMAIN. DISPLAY FRAME SHALL NOT BE PAINTED.
22. EXISTING DISPLAY CASE WITH WOOD TRIM SHALL REMAIN. PREP TRIM FOR NEW FINISH.
23. REMOVE EXISTING BATHROOM PARTITIONS.
24. EXISTING WATER FOUNTAIN SHALL BE REMOVED AND SALVAGED.
25. REMOVE EXISTING WATER FOUNTAIN PREP LINES FOR NEW FIXTURE
    – REFER TO PLUMBING PLANS
26. EXISTING WATER FOUNTAIN SHALL BE REMOVED. REMOVE MASONRY AS REQUIRED FOR NEW FIXTURES HEIGHT – PREP AND CLEAN WALLS.
    – REFER TO PLUMBING PLAN
27. REMOVE EXISTING ROLLING CONCESSION DOOR COMPLETELY. PREP WALL FOR NEW MASONRY.
    – REFER TO PARTIAL FLOOR PLAN ON SHEET A1.1.5 FOR MORE DETAILS.
28. ALL EXISTING PLUMBING FIXTURES ARE TO BE REMOVED AND SALVAGED.
    – REFER TO PLUMBING PLAN
29. ALTERNATE BID #1: EXISTING FLOOR SHALL REMAIN; REMOVE EXISITNG VINYL BASE & PREP WALLS TO RECEIVE NEW FINISH. PROTECT THE EXISTING FLOOR.
30. ALTERNATE BID #1 REMOVE & SALVAGE EXISTING WALL MOUNTED PADDING.
31. ALTERNATE BID #1 EXISTING DOOR SHALL BE REMOVED FROM OFF FRAME, SALVAGE & PROTECT DOOR; DOOR FRAME SHALL HAVE EXISTING PAINT CHEMICALLY STRIPPED OFF.
    – REFER TO PAINT SPECIFICATION FOR STRIPPING PROCESS.
32. REMOVE ALL EXISTING BATHROOM ACCESSORIES
33. ALL EXISTING BATHROOM ACCESSORIES SHALL REMAIN

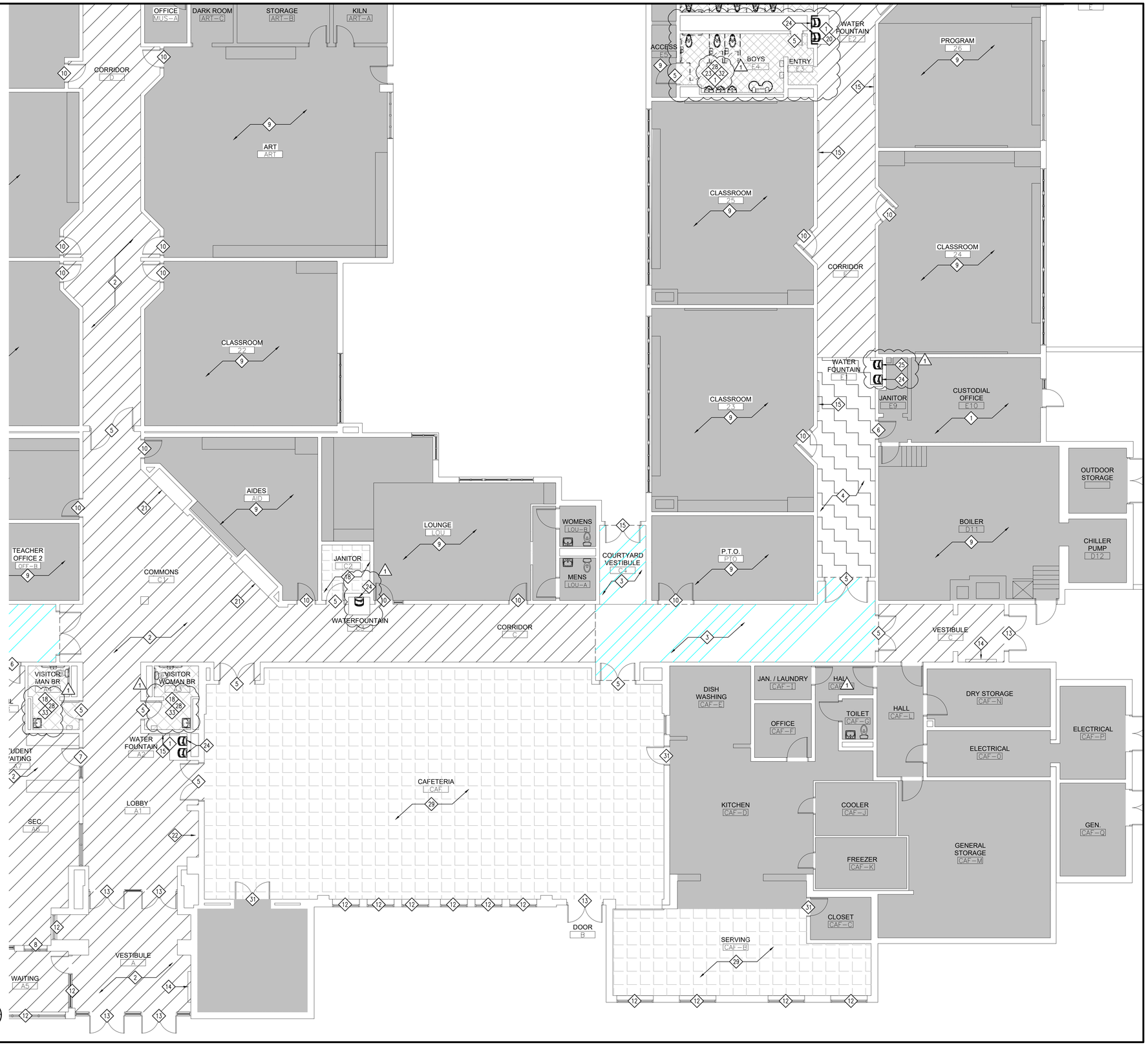

PARTIAL FLOOR PLAN - AREA C

DEMOLITION

SCALE: 1/8" = 1'-0"

PLAN NORTH

x:\merrillville schools\25058 classroom renovation wood_phase 2\Drawings\a100 floorplan.dwg

THOMAS E. KOHN REGISTERED STATE OF INDIANA ARCHITECT AP19500131

DATE
01-29-2026
1 02-09-2026

PHASE #2 OF FINISH RENOVATIONS AT
JOHN WOOD ELEMENTARY SCHOOL
6100 E 73rd AVE
MERRILLVILLE, IN, 46410

CSK ARCHITECTS, P.C.
CROWN POINT, IN 46307
www.cskarchitects.com
6919 W. LINCOLN HIGHWAY
219-322-5950

25058

SHEET
A
1.0.3

GENERAL FLOOR PLAN NOTES - DEMOLITION

1. FIELD VERIFY ALL EXISTING DIMENSIONS AND CONDITIONS PRIOR TO CONSTRUCTION.
2. CONTRACTOR IS RESPONSIBLE FOR REMOVAL OF ALL DEMOLITION MATERIAL AND PLACING IN DUMPSTER DURING THE DURATION OF THE CONSTRUCTION PROJECT.
3. CONTRACTOR MUST REPAIR ALL SURFACES AFFECTED BY DEMOLITION. MATCH AND PATCH AS REQUIRED.
4. ALL LOOSE FURNISHING AND EQUIPMENT WILL BE RELOCATED BY OWNER.
5. EXISTING ASBESTOS CONTAINING FLOOR TILE AND MASTIC SHALL BE REMOVED BY OTHERS/OWNER.
6. ALL WALL MOUNTED ACCESSORIES SHALL REMAIN.
7. ALL OF THE FLOOR PLAN DEMOLITION NOTES LISTED MAY NOT APPEAR ON EACH INDIVIDUAL PROJECT DEMOLITION PLAN.
8. ABATEMENT CONTRACTOR SHALL REMOVAL BLACK MASTIC WHERE SHOWN
9. OTHER AREAS (NOT SPECIFICALLY DEPICTED) MAY CONTAIN ASBESTOS FLOORING MATERIALS. IF FOUND PRESENT UPON REMOVAL OF EXISTING CARPET, MATERIALS WILL BE QUANTIFIED PRIOR TO ABATEMENT USING PRICING.

KEY PLAN

SCALE: NTS

PLAN NORTH

KEY FLOOR PLAN NOTES - DEMOLITION:

1. EXISTING FLOORING & EXISTING WALL BASE SHALL REMAIN – PREP WALL FOR NEW FINISHES & PROVIDE PROTECTION FOR THE EXISTING FLOORING.
2. REMOVE EXISTING CARPETING & EXISTING WALL BASE. PATCH & PREP FLOORS & WALLS TO RECEIVE NEW FINISHES.
3. EXISTING FLOORING SHALL BE REMOVED BY OTHERS. GENERAL CONTRACTOR SHALL REMOVE THE EXISTING WALL BASE & PREP WALL FOR NEW WALL FINISH.
4. REMOVE EXISTING VCT TILE & WALL BASE. REMOVE EXISTING WALL BASE & PREP WALL FOR NEW WALL FINISH.
5. EXISTING DOOR SHALL BE REMOVED FROM OFF FRAME, SALVAGE & PROTECT DOOR; DOOR FRAME SHALL HAVE EXISTING PAINT CHEMICALLY STRIPPED OFF.
   – REFER TO PAINT SPECIFICATION FOR STRIPPING PROCESS.
6. EXISTING DOOR, THIS DOOR INCLUDES A WINDOW LITE–KIT WITHIN IT. REMOVE DOOR FROM OFF FRAME, SALVAGE & PROTECT DOOR; DOOR FRAME SHALL HAVE EXISTING PAINT CHEMICALLY STRIPPED OFF – REFER TO PAINT SPECIFICATION FOR STRIPPING PROCESS.
7. EXISTING DOOR, THIS DOOR INCLUDES A LITE–KIT WITHIN IT & HAS A SIDELITE WINDOW. THE DOOR SHALL BE REMOVED FROM OFF FRAME, SALVAGE & PROTECT DOOR; THE DOOR FRAME & SIDELITE FRAME SHALL HAVE EXISTING PAINT CHEMICALLY STRIPPED OFF OF THEM.
   – REFER TO PAINT SPECIFICATION FOR STRIPPING PROCESS.
8. EXISTING WINDOW SHALL REMAIN – THE WINDOW FRAME SHALL HAVE EXISTING PAINT CHEMICALLY STRIPPED OFF OF IT – REFER TO PAINT SPECIFICATION FOR STRIPPING PROCESS.
9. EXISTING FLOOR & WALL FINISHES SHALL REMAIN – AREA OF SCHOOL NOT IN SCOPE OF WORK.
10. EXISTING DOOR SHALL REMAIN – DOOR IS NOT IN SCOPE OF WORK.
11. EXISTING DOOR SHALL BE REMOVED, SALVAGE & PROTECT; DOOR FRAME SHALL REMAIN AND HAVE EXISTING PAINT CHEMICALLY STRIPPED OFF. DOOR SHALL BE TRIMMED IF REQUIRED FOR NEW FLOOR FINISH HEIGHT.
    – REFER TO PAINT SPECIFICATION FOR STRIPPING PROCESS.
12. EXISTING ALUMINUM WINDOWS SHALL REMAIN. THESE WINDOWS WILL NOT RECEIVE NEW PAINT FINISH.
13. EXISTING ALUMINUM DOOR & HARDWARE SHALL REMAIN. THESE DOORS & FRAMES WILL NOT RECEIVE NEW PAINT FINISH.
14. EXISTING WALL MOUNTED UNIT HEATER SHALL REMAIN AND SHALL NOT RECEIVE PAINT.
15. EXISTING WALL MOUNTED ACCESSORIES SHALL REMAIN – PROTECT ACCESSORIES WHILE PAINTING.
16. EXISTING CASEWORK SHALL REMAIN. REMOVE EXISTING VINYL BASE ON CASEWORK.
17. REMOVE EXISTING FLOOR MOUNTED BENCH COMPLETELY
18. EXISTING FLOOR SHALL REMAIN. REMOVE EXISTING VINYL BASE. PROTECT FLOORING AND PREP WALL FOR NEW FINISH.
19. EXISTING FLOORING SHALL REMAIN. PREP FLOOR TO RECEIVE NEW CARPET FINISH INSTALLED OVER EXISTING. PREP WALL FOR NEW FINISHES.
20. REMOVE EXISTING CERAMIC WALL TILE COMPLETELY. PREP WALL FOR NEW TILE FINISH.
21. EXISTING DISPLAY CASE SHALL REMAIN. DISPLAY FRAME SHALL NOT BE PAINTED.
22. EXISTING DISPLAY CASE WITH WOOD TRIM SHALL REMAIN. PREP TRIM FOR NEW FINISH.
23. REMOVE EXISTING BATHROOM PARTITIONS.
24. EXISTING WATER FOUNTAIN SHALL BE REMOVED AND SALVAGED.
25. REMOVE EXISTING WATER FOUNTAIN PREP LINES FOR NEW FIXTURE
    – REFER TO PLUMBING PLANS
26. EXISTING WATER FOUNTAIN SHALL BE REMOVED. REMOVE MASONRY AS REQUIRED FOR NEW FIXTURES HEIGHT – PREP AND CLEAN WALLS.
    – REFER TO PLUMBING PLAN
27. REMOVE EXISTING ROLLING CONCESSION DOOR COMPLETELY. PREP WALL FOR NEW MASONRY.
    – REFER TO PARTIAL FLOOR PLAN ON SHEET A1.1.5 FOR MORE DETAILS.
28. ALL EXISTING PLUMBING FIXTURES ARE TO BE REMOVED AND SALVAGED.
    – REFER TO PLUMBING PLAN
29. ALTERNATE BID #1: EXISTING FLOOR SHALL REMAIN; REMOVE EXISITNG VINYL BASE & PREP WALLS TO RECEIVE NEW FINISH. PROTECT THE EXISTING FLOOR.
30. ALTERNATE BID #1 REMOVE & SALVAGE EXISTING WALL MOUNTED PADDING.
31. ALTERNATE BID #1 EXISTING DOOR SHALL BE REMOVED FROM OFF FRAME, SALVAGE & PROTECT DOOR; DOOR FRAME SHALL HAVE EXISTING PAINT CHEMICALLY STRIPPED OFF.
    – REFER TO PAINT SPECIFICATION FOR STRIPPING PROCESS.
32. REMOVE ALL EXISTING BATHROOM ACCESSORIES
33. ALL EXISTING BATHROOM ACCESSORIES SHALL REMAIN

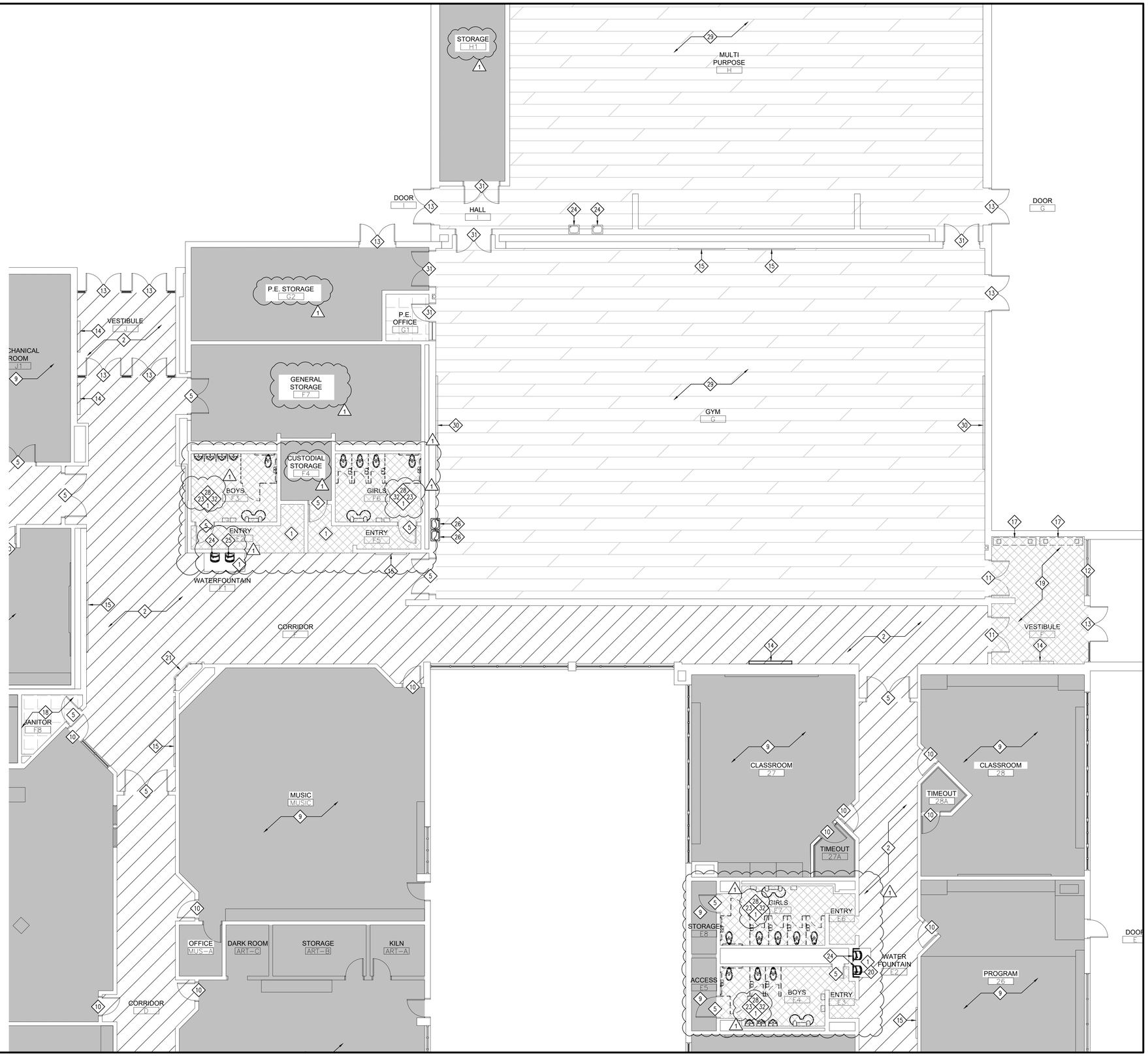

PARTIAL FLOOR PLAN - AREA D

DEMOLITION

SCALE: 1/8" = 1'–0"

PLAN NORTH

x:\merrillville schools\25058 classroom renovation wood_phase 2\Drawings\a100 floorplan.dwg

THOMAS E. KOHN REGISTERED AP19600131 STATE OF INDIANA ARCHITECT

DATE
01-29-2026
1 02-09-2026

PHASE #2 OF FINISH RENOVATIONS AT
JOHN WOOD ELEMENTARY SCHOOL
6100 E 73rd AVE
MERRILLVILLE, IN, 46410

CSK ARCHITECTS, P.C.
CROWN POINT, IN 46307
www.cskarchitects.com
6919 W. LINCOLN HIGHWAY
219-322-5950

25058

SHEET
A
1.0.4

GENERAL FLOOR PLAN NOTES - DEMOLITION

1. FIELD VERIFY ALL EXISTING DIMENSIONS AND CONDITIONS PRIOR TO CONSTRUCTION.
2. CONTRACTOR IS RESPONSIBLE FOR REMOVAL OF ALL DEMOLITION MATERIAL AND PLACING IN DUMPSTER DURING THE DURATION OF THE CONSTRUCTION PROJECT.
3. CONTRACTOR MUST REPAIR ALL SURFACES AFFECTED BY DEMOLITION. MATCH AND PATCH AS REQUIRED.
4. ALL LOOSE FURNISHING AND EQUIPMENT WILL BE RELOCATED BY OWNER.
5. EXISTING ASBESTOS CONTAINING FLOOR TILE AND MASTIC SHALL BE REMOVED BY OTHERS/OWNER.
6. ALL WALL MOUNTED ACCESSORIES SHALL REMAIN.
7. ALL OF THE FLOOR PLAN DEMOLITION NOTES LISTED MAY NOT APPEAR ON EACH INDIVIDUAL PROJECT DEMOLITION PLAN.
8. ABATEMENT CONTRACTOR SHALL REMOVAL BLACK MASTIC WHERE SHOWN
9. OTHER AREAS (NOT SPECIFICALLY DEPICTED) MAY CONTAIN ASBESTOS FLOORING MATERIALS. IF FOUND PRESENT UPON REMOVAL OF EXISTING CARPET, MATERIALS WILL BE QUANTIFIED PRIOR TO ABATEMENT USING PRICING.

KEY PLAN

SCALE: NTS

PLAN NORTH

KEY FLOOR PLAN NOTES - DEMOLITION:

1. EXISTING FLOORING & EXISTING WALL BASE SHALL REMAIN – PREP WALL FOR NEW FINISHES & PROVIDE PROTECTION FOR THE EXISTING FLOORING.
2. REMOVE EXISTING CARPETING & EXISTING WALL BASE. PATCH & PREP FLOORS & WALLS TO RECEIVE NEW FINISHES.
3. EXISTING FLOORING SHALL BE REMOVED BY OTHERS. GENERAL CONTRACTOR SHALL REMOVE THE EXISTING WALL BASE & PREP WALL FOR NEW WALL FINISH.
4. REMOVE EXISTING VCT TILE & WALL BASE. REMOVE EXISTING WALL BASE & PREP WALL FOR NEW WALL FINISH.
5. EXISTING DOOR SHALL BE REMOVED FROM OFF FRAME, SALVAGE & PROTECT DOOR; DOOR FRAME SHALL HAVE EXISTING PAINT CHEMICALLY STRIPPED OFF.
   – REFER TO PAINT SPECIFICATION FOR STRIPPING PROCESS.
6. EXISTING DOOR, THIS DOOR INCLUDES A WINDOW LITE-KIT WITHIN IT. REMOVE DOOR FROM OFF FRAME, SALVAGE & PROTECT DOOR; DOOR FRAME SHALL HAVE EXISTING PAINT CHEMICALLY STRIPPED OFF – REFER TO PAINT SPECIFICATION FOR STRIPPING PROCESS.
7. EXISTING DOOR, THIS DOOR INCLUDES A LITE-KIT WITHIN IT & HAS A SIDELITE WINDOW. THE DOOR SHALL BE REMOVED FROM OFF FRAME, SALVAGE & PROTECT DOOR; THE DOOR FRAME & SIDELITE FRAME SHALL HAVE EXISTING PAINT CHEMICALLY STRIPPED OFF OF THEM.
   – REFER TO PAINT SPECIFICATION FOR STRIPPING PROCESS.
8. EXISTING WINDOW SHALL REMAIN – THE WINDOW FRAME SHALL HAVE EXISTING PAINT CHEMICALLY STRIPPED OFF OF IT – REFER TO PAINT SPECIFICATION FOR STRIPPING PROCESS.
9. EXISTING FLOOR & WALL FINISHES SHALL REMAIN – AREA OF SCHOOL NOT IN SCOPE OF WORK.
10. EXISTING DOOR SHALL REMAIN – DOOR IS NOT IN SCOPE OF WORK.
11. EXISTING DOOR SHALL BE REMOVED, SALVAGE & PROTECT; DOOR FRAME SHALL REMAIN AND HAVE EXISTING PAINT CHEMICALLY STRIPPED OFF. DOOR SHALL BE TRIMMED IF REQUIRED FOR NEW FLOOR FINISH HEIGHT.
    – REFER TO PAINT SPECIFICATION FOR STRIPPING PROCESS.
12. EXISTING ALUMINUM WINDOWS SHALL REMAIN. THESE WINDOWS WILL NOT RECEIVE NEW PAINT FINISH.
13. EXISTING ALUMINUM DOOR & HARDWARE SHALL REMAIN. THESE DOORS & FRAMES WILL NOT RECEIVE NEW PAINT FINISH.
14. EXISTING WALL MOUNTED UNIT HEATER SHALL REMAIN AND SHALL NOT RECEIVE PAINT.
15. EXISTING WALL MOUNTED ACCESSORIES SHALL REMAIN – PROTECT ACCESSORIES WHILE PAINTING.
16. EXISTING CASEWORK SHALL REMAIN. REMOVE EXISTING VINYL BASE ON CASEWORK.
17. REMOVE EXISTING FLOOR MOUNTED BENCH COMPLETELY
18. EXISTING FLOOR SHALL REMAIN. REMOVE EXISTING VINYL BASE. PROTECT FLOORING AND PREP WALL FOR NEW FINISH.
19. EXISTING FLOORING SHALL REMAIN. PREP FLOOR TO RECEIVE NEW CARPET FINISH INSTALLED OVER EXISTING. PREP WALL FOR NEW FINISHES.
20. REMOVE EXISTING CERAMIC WALL TILE COMPLETELY. PREP WALL FOR NEW TILE FINISH.
21. EXISTING DISPLAY CASE SHALL REMAIN. DISPLAY FRAME SHALL NOT BE PAINTED.
22. EXISTING DISPLAY CASE WITH WOOD TRIM SHALL REMAIN. PREP TRIM FOR NEW FINISH.
23. REMOVE EXISTING BATHROOM PARTITIONS.
24. EXISTING WATER FOUNTAIN SHALL BE REMOVED AND SALVAGED.
25. REMOVE EXISTING WATER FOUNTAIN PREP LINES FOR NEW FIXTURE
    – REFER TO PLUMBING PLANS
26. EXISTING WATER FOUNTAIN SHALL BE REMOVED. REMOVE MASONRY AS REQUIRED FOR NEW FIXTURES HEIGHT – PREP AND CLEAN WALLS.
    – REFER TO PLUMBING PLAN
27. REMOVE EXISTING ROLLING CONCESSION DOOR COMPLETELY. PREP WALL FOR NEW MASONRY.
    – REFER TO PARTIAL FLOOR PLAN ON SHEET A1.1.5 FOR MORE DETAILS.
28. ALL EXISTING PLUMBING FIXTURES ARE TO BE REMOVED AND SALVAGED.
    – REFER TO PLUMBING PLAN
29. ALTERNATE BID #1: EXISTING FLOOR SHALL REMAIN; REMOVE EXISITNG VINYL BASE & PREP WALLS TO RECEIVE NEW FINISH. PROTECT THE EXISTING FLOOR.
30. ALTERNATE BID #1 REMOVE & SALVAGE EXISTING WALL MOUNTED PADDING.
31. ALTERNATE BID #1 EXISTING DOOR SHALL BE REMOVED FROM OFF FRAME, SALVAGE & PROTECT DOOR; DOOR FRAME SHALL HAVE EXISTING PAINT CHEMICALLY STRIPPED OFF.
    – REFER TO PAINT SPECIFICATION FOR STRIPPING PROCESS.
32. REMOVE ALL EXISTING BATHROOM ACCESSORIES
33. ALL EXISTING BATHROOM ACCESSORIES SHALL REMAIN

PARTIAL FLOOR PLAN - AREA D

DEMOLITION

SCALE: 1/8" = 1'-0"

PLAN NORTH

x:\merrillville schools\25058 classroom renovation wood_phase 2\Drawings\a100 floorplan.dwg

THOMAS E. KOHN REGISTERED AP19600131 STATE OF INDIANA ARCHITECT

DATE
01-29-2026
1 02-09-2026

PHASE #2 OF FINISH RENOVATIONS AT
JOHN WOOD ELEMENTARY SCHOOL
6100 E 73rd AVE
MERRILLVILLE, IN. 46410

CSK ARCHITECTS, P.C.
CROWN POINT, IN 46307
www.cskarchitects.com
6919 W. LINCOLN HIGHWAY
219-322-5950

25058

SHEET
A
1.0.5

INTERIOR ELEVATIONS

SCALE: NTS

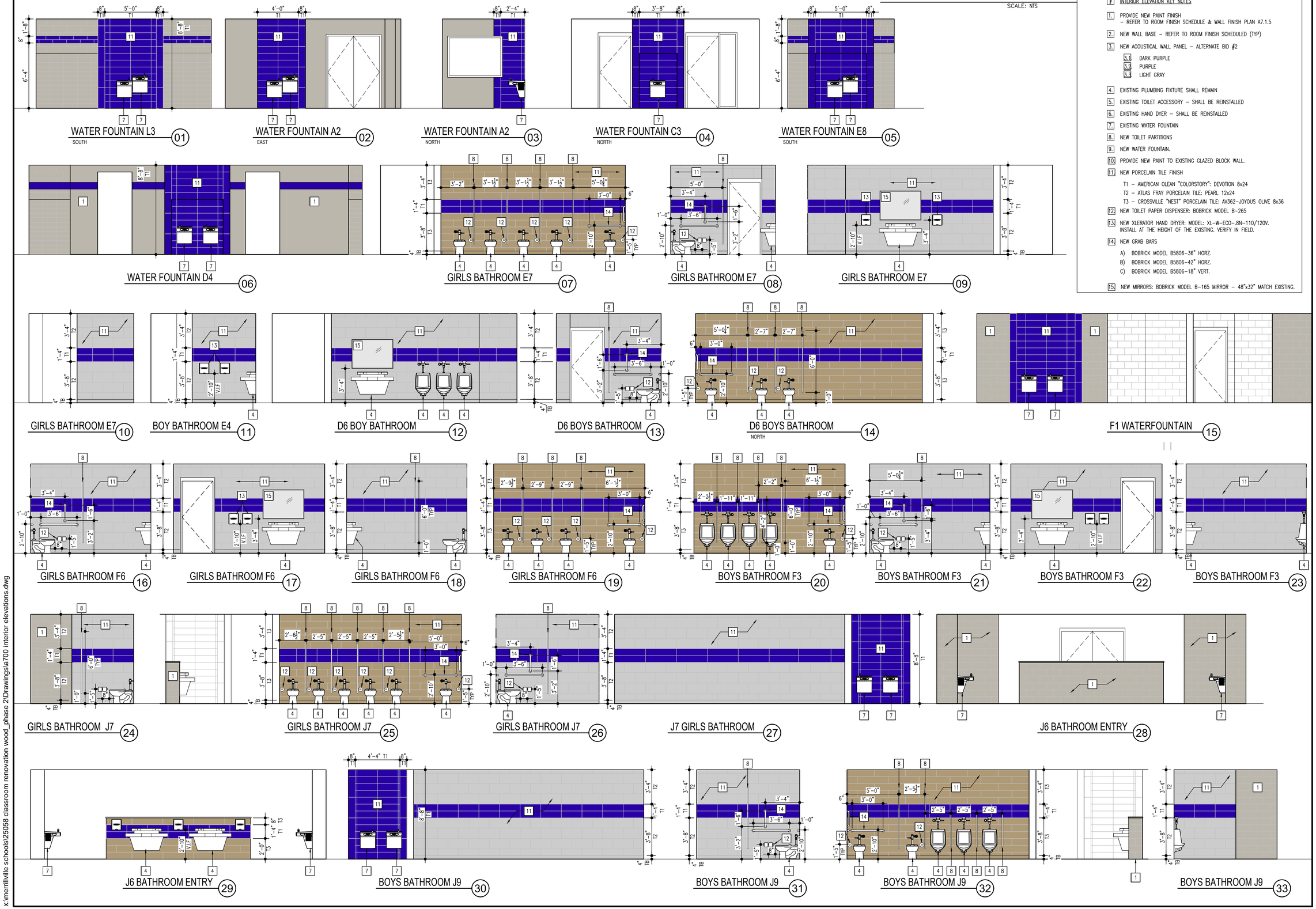

INTERIOR ELEVATIONS KEY NOTES

1. INTERIOR ELEVATION KEY NOTES
1. PROVIDE NEW PAINT FINISH
   - REFER TO ROOM FINISH SCHEDULE & WALL FINISH PLAN A7.1.5
2. NEW WALL BASE – REFER TO ROOM FINISH SCHEDULED (TYP)
3. NEW ACOUSTICAL WALL PANEL – ALTERNATE BID #2
   - 3.1. DARK PURPLE
   - 3.2. PURPLE
   - 3.3. LIGHT GRAY
4. EXISTING PLUMBING FIXTURE SHALL REMAIN
5. EXISTING TOILET ACCESSORY – SHALL BE REINSTALLED
6. EXISTING HAND DYER – SHALL BE REINSTALLED
7. EXISTING WATER FOUNTAIN
8. NEW TOILET PARTITIONS
9. NEW WATER FOUNTAIN.
10. PROVIDE NEW PAINT TO EXISTING GLAZED BLOCK WALL.
11. NEW PORCELAIN TILE FINISH
    - T1 – AMERICAN OLEAN "COLORSTORY": DEVOTION 8x24
    - T2 – ATLAS FRAY PORCELAIN TILE: PEARL 12x24
    - T3 – CROSSVILLE "NEST" PORCELAIN TILE: AV362–JOYOUS OLIVE 8x36
12. NEW TOILET PAPER DISPENSER: BOBRICK MODEL B–265
13. NEW XLERATOR HAND DRYER: MODEL: XL–W–ECO–.8N–110/120V. INSTALL AT THE HEIGHT OF THE EXISTING. VERIFY IN FIELD.
14. NEW GRAB BARS
    - A) BOBRICK MODEL B5806–36" HORZ.
    - B) BOBRICK MODEL B5806–42" HORZ.
    - C) BOBRICK MODEL B5806–18" VERT.
15. NEW MIRRORS: BOBRICK MODEL B–165 MIRROR – 48"x32" MATCH EXISTING.

THOMAS E. FLECHAIN REGISTERED AP 10600131 STATE OF INDIANA ARCHITECT

DATE
01-29-2026
△1 02-09-2026

PHASE #2 OF FINISH RENOVATIONS AT
JOHN WOOD ELEMENTARY SCHOOL
6100 E 73rd AVE
MERRILLVILLE, IN, 46410

CSK ARCHITECTS, P.C.
CROWN POINT, IN 46307
www.cskarchitects.com
6919 W. LINCOLN HIGHWAY
219-322-5950

25058

SHEET
A
7.1.0

x:\merrillville schools\25058 classroom renovation wood_phase 2\Drawings\a700 interior elevations.dwg

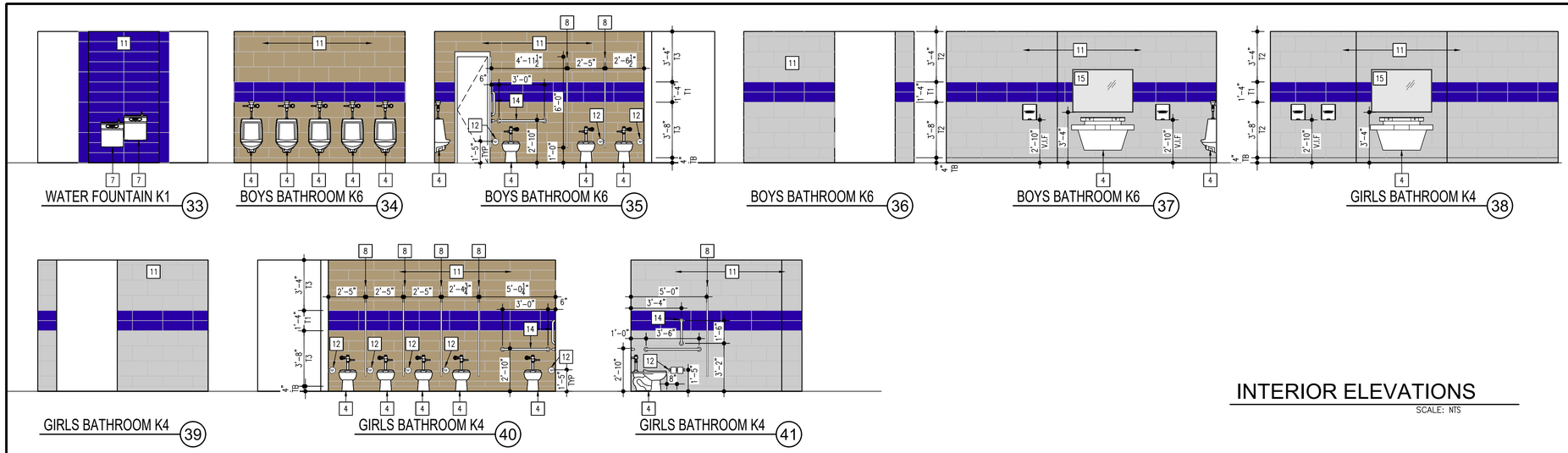

INTERIOR ELEVATIONS

SCALE: NTS

INTERIOR ELEVATIONS KEY NOTES

#	INTERIOR ELEVATION KEY NOTES
1.	PROVIDE NEW PAINT FINISH – REFER TO ROOM FINISH SCHEDULE & WALL FINISH PLAN A7.1.5
2.	NEW WALL BASE – REFER TO ROOM FINISH SCHEDULED (TYP)
3.	NEW ACOUSTICAL WALL PANEL – ALTERNATE BID #2 3.1 DARK PURPLE 3.2 PURPLE 3.3 LIGHT GRAY
4.	EXISTING PLUMBING FIXTURE SHALL REMAIN
5.	EXISTING TOILET ACCESSORY – SHALL BE REINSTALLED
6.	EXISTING HAND DYER – SHALL BE REINSTALLED
7.	EXISTING WATER FOUNTAIN
8.	NEW TOILET PARTITIONS
9.	NEW WATER FOUNTAIN.
10.	PROVIDE NEW PAINT TO EXISTING GLAZED BLOCK WALL.
11.	NEW PORCELAIN TILE FINISH T1 – AMERICAN OLEAN "COLORSTORY": DEVOTION 8x24 T2 – ATLAS FRAY PORCELAIN TILE: PEARL 12x24 T3 – CROSSVILLE "NEST" PORCELAIN TILE: AV362–JOYOUS OLIVE 8x36
12.	NEW TOILET PAPER DISPENSER: BOBRICK MODEL B–265
13.	NEW XLERATOR HAND DRYER: MODEL: XL–W–ECO–.8N–110/120V. INSTALL AT THE HEIGHT OF THE EXISTING. VERIFY IN FIELD.
14.	NEW GRAB BARS A) BOBRICK MODEL B5806–36" HORZ. B) BOBRICK MODEL B5806–42" HORZ. C) BOBRICK MODEL B5806–18" VERT.
15.	NEW MIRRORS: BOBRICK MODEL B–165 MIRROR – 48"x32" MATCH EXISTING.

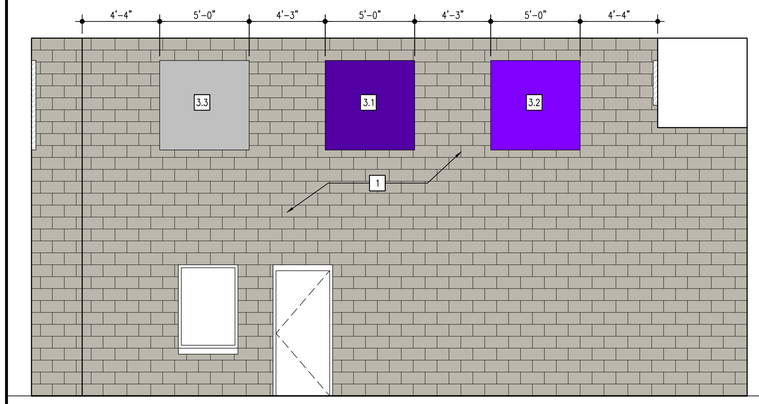

CAFETERIA - ALTERNATE BID #1 & #2 (42)
EAST ELEVATION

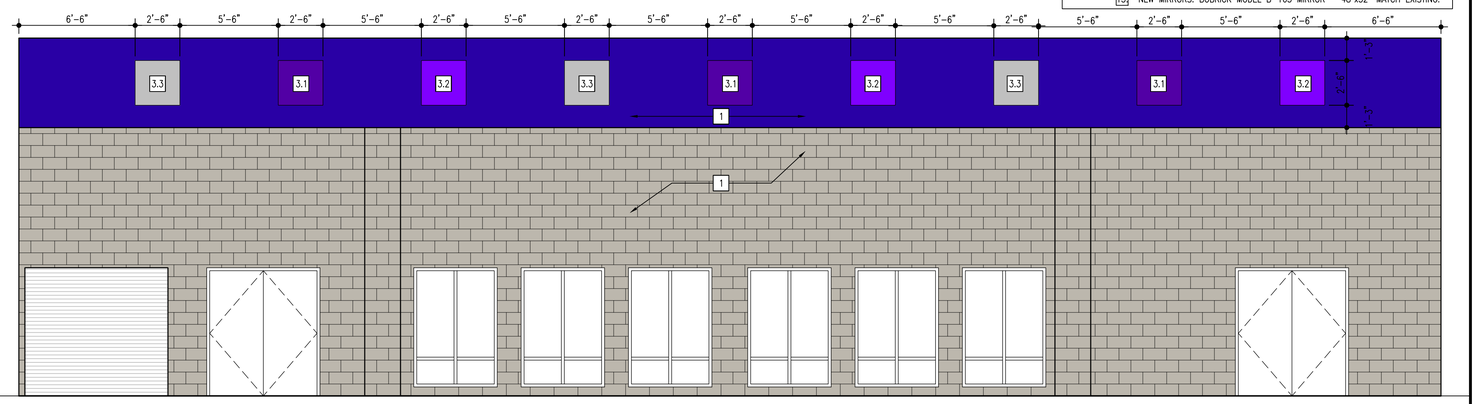

CAFETERIA - ALTERNATE BID #1 & #2 (43)
SOUTH ELEVATION

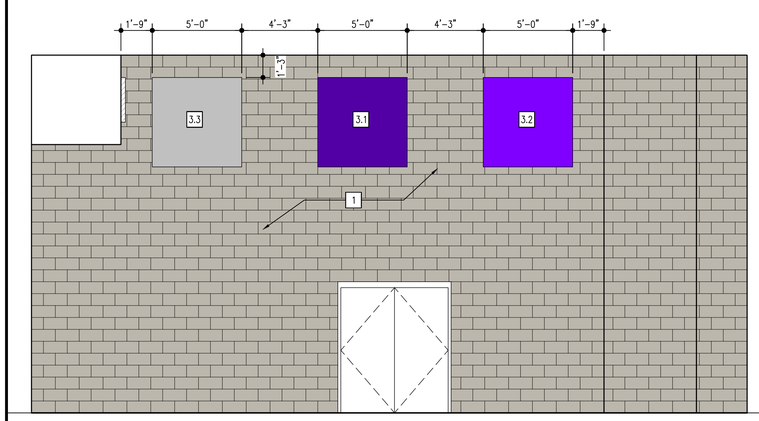

CAFETERIA - ALTERNATE BID #1 & #2 (44)
WEST ELEVATION

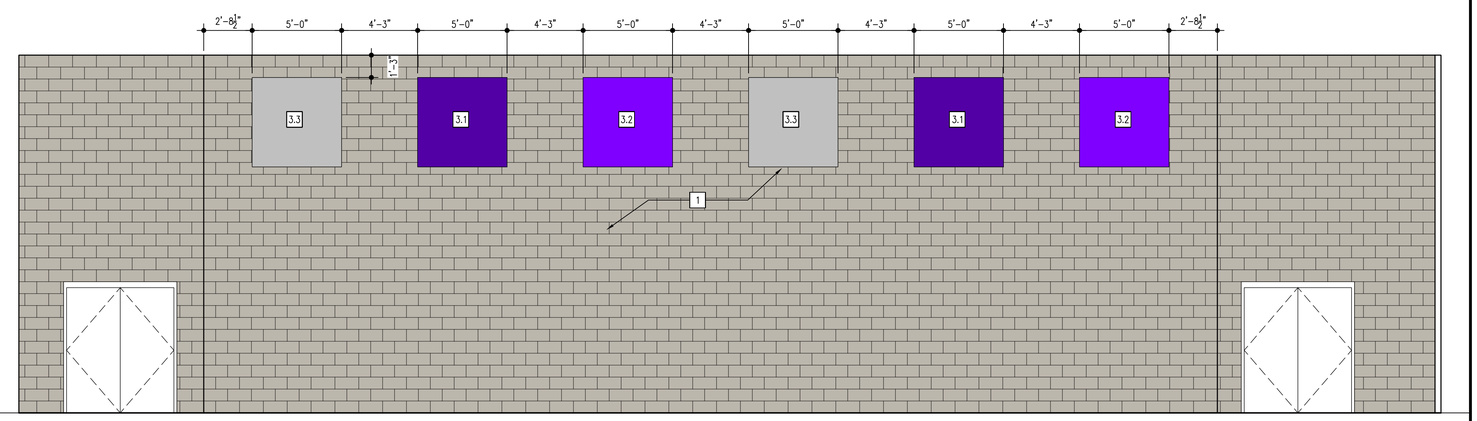

CAFETERIA - ALTERNATE BID #1 & #2 (45)
NORTH ELEVATION

THOMAS E. KUHN
REGISTERED
AP19600131
STATE OF INDIANA
ARCHITECT

DATE
01-29-2026
1 02-09-2026

PHASE #2 OF FINISH RENOVATIONS AT
JOHN WOOD ELEMENTARY SCHOOL
6100 E 73rd AVE
MERRILLVILLE, IN, 46410

CSK ARCHITECTS, P.C.
6919 W. LINCOLN HIGHWAY
219-322-5950
CROWN POINT, IN 46307
www.cskarchitects.com

25058

SHEET
A
7.1.1

x:\merrillville schools\25058 classroom renovation wood_phase 2\Drawings\a700 interior elevations.dwg

MASTER FLOOR PLAN

FLOOR FINISH

SCALE: 1/16" = 1'-0"

PLAN NORTH

NEW FLOOR FINISH LEGEND:

- VCT ARMSTRONG FLOORING: IMPERIAL TEXTURE – 57533 TIGER EYES
- VCT ARMSTRONG FLOORING: IMPERIAL TEXTURE – 57518 WHITE OUT
- VCT ARMSTRONG FLOORING: IMPERIAL TEXTURE – 51915 CHARCOAL
- CARPET FLOORING: INTERFACE – AERIAL FLYING COLORS – 105815 SMOKE/IRIS AE315.
- WALL OFF CARPET FLOORING: INTERFACE – STEP REPEAT 104940 IRON
- EXISTING VCT – SHALL REMAIN
- EXISTING TILE FLOORING – SHALL REMAIN
- EXISTING GYM FLOORING – SHALL REMAIN

x:\merrillville schools\25058 classroom renovation wood_phase 2\Drawings\a900 Floor Finish Plan.dwg

THOMAS E. KOHN
REGISTERED
AR 10600131
STATE OF INDIANA
ARCHITECT

DATE
01-29-2026

PHASE #2 OF FINISH RENOVATIONS AT
JOHN WOOD ELEMENTARY SCHOOL
6100 E 73rd AVE
MERRILLVILLE, IN. 46410

CSK ARCHITECTS, P.C.
6919 W. LINCOLN HIGHWAY
219-322-5950
CROWN POINT, IN 46307
www.cskarchitects.com

25058

SHEET
A
9.1.0

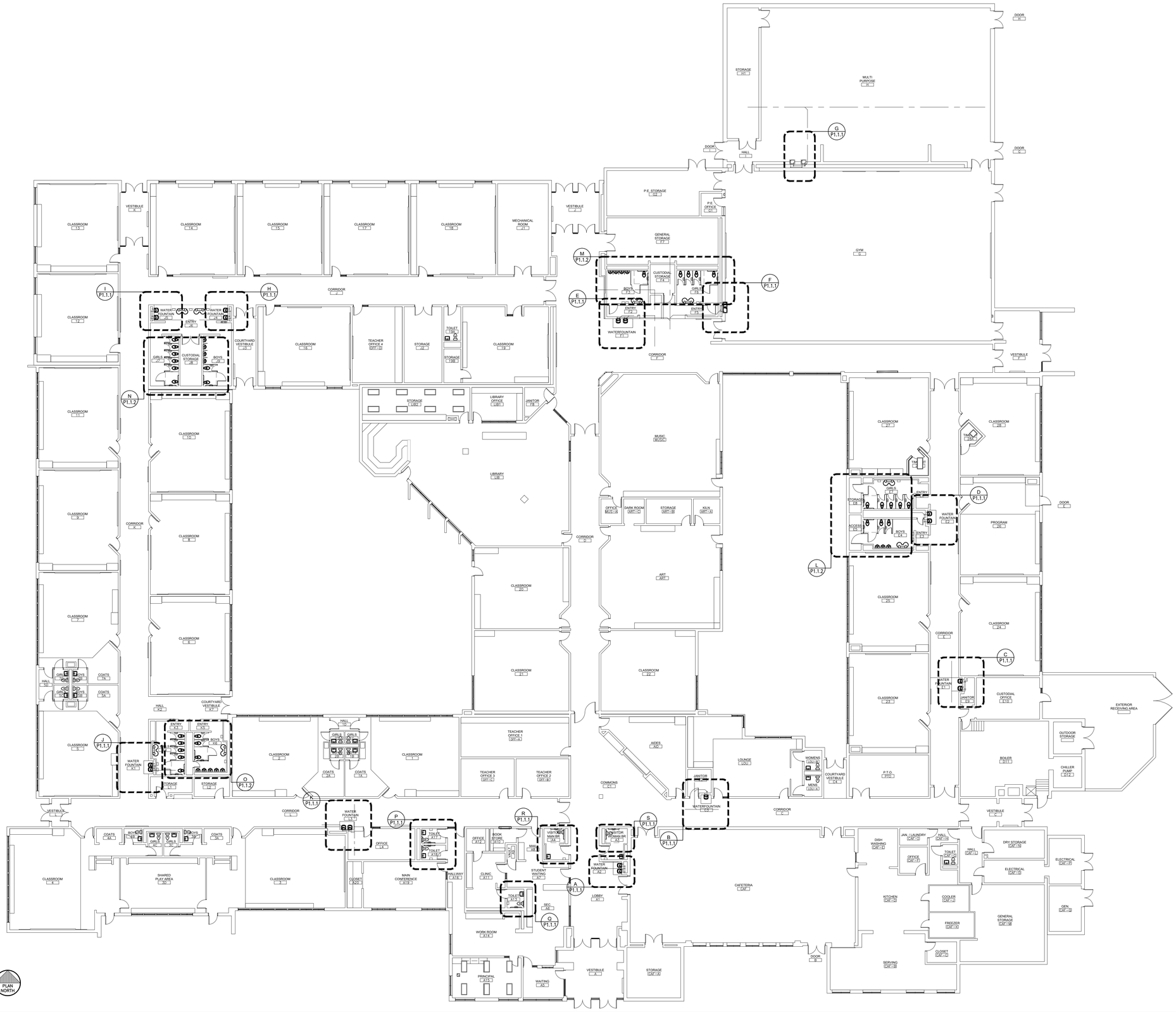

MASTER PLUMBING PLAN

NEW CONSTRUCTION

SCALE: 1/16" = 1'-0"

PLAN NORTH

x:\merrillville schools\25058 classroom renovation wood_phase 2\Drawings\p100 plumbing.dwg

THOMAS E. KUHN
REGISTERED
AP19500131
STATE OF
INDIANA
ARCHITECT

DATE
01-29-2026

PHASE #2 OF FINISH RENOVATIONS AT
JOHN WOOD ELEMENTARY SCHOOL
6100 E 73rd AVE
MERRILLVILLE, IN, 46410

CSK ARCHITECTS, P.C.
6919 W. LINCOLN HIGHWAY
219-322-5950
CROWN POINT, IN 46307
www.cskarchitects.com

25058

SHEET
P
1.1.0

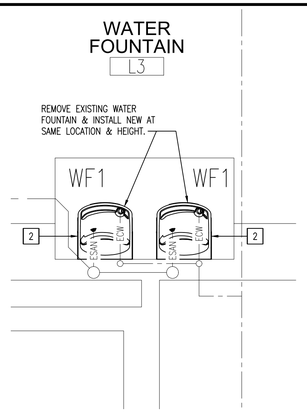

PARTIAL PLUMBING PLAN
NEW CONSTRUCTION - AREA K SCALE: 1/2" = 1'-0"

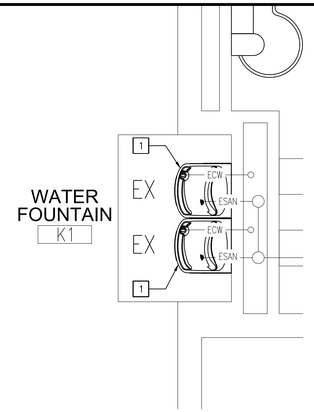

PARTIAL PLUMBING PLAN
NEW CONSTRUCTION - AREA J SCALE: 1/2" = 1'-0"

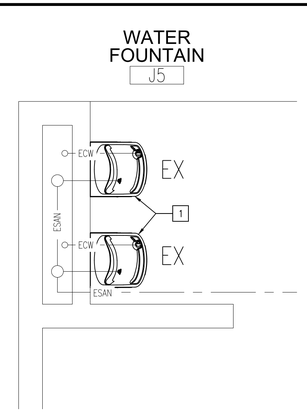

PARTIAL PLUMBING PLAN
NEW CONSTRUCTION - AREA I SCALE: 1/2" = 1'-0"

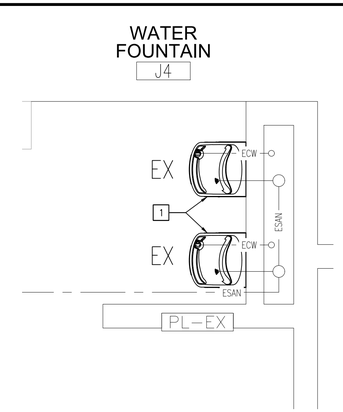

PARTIAL PLUMBING PLAN
NEW CONSTRUCTION - AREA H SCALE: 1/2" = 1'-0"

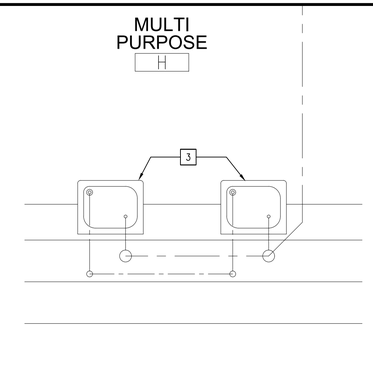

PARTIAL PLUMBING PLAN
NEW CONSTRUCTION - AREA G SCALE: 1/2" = 1'-0"

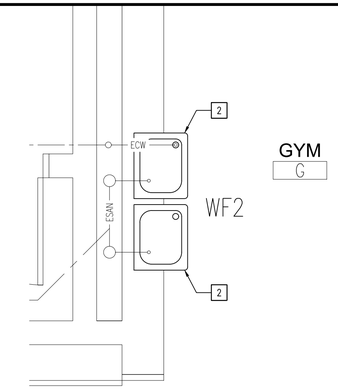

PARTIAL PLUMBING PLAN
NEW CONSTRUCTION - AREA F SCALE: 1/2" = 1'-0"

PIPING LEGEND:

- ECW — EXISTING COLD WATER SUPPLY
- EHW — EXISTING HOT WATER SUPPLY
- ESAN — EXISTING SANITARY PIPING

PLUMBING FIXTURE SCHEDULE

TAG	DESCRIPTION	SPECIFICATION	REMARKS
EWC-1	ELKAY WALL MOUNT ADA WATER COOLER	"ELKAY" EZS8L, ELKAY ezH20 WALL MOUNT ADA COOLER NON- FILTERED REFRIGERATED LIGHT GRAY, GRANITE. CHILLING CAPACITY OF 8.0 GPH AT 50°F. FURNISHED WITH FLEXI-GUARD SAFETY BUBBLER, FOR INDOOR APPLICATION. USE EXISTING CARRIER. INSTALL AT EXISTING HEIGHT.	
EWC-2	OASIS SEMI-RECESSED CUSPIDOR COMBINATION	"OASIS" SEMI-RECESSED DRINKING FOUNTAIN AND COMPANION CUSPIDOR. STAINLESS STEEL FINISH. INSTALL NEW FIXTURE WITH THE SPOUT OUTLET AT 38" AFF.	
EX	EXISTING FIXTURE	EXISTING FIXTURE.	

GENERAL PLUMBING NOTES:
1. ALL NEW PLUMBING EQUIPMENT SHALL BE SECURELY FASTENED TO THE BUILDING STRUCTURE.
2. COORDINATE WITH ARCHITECTURAL, ELECTRICAL, MECHANICAL AND STRUCTURAL PLANS FOR ADDITIONAL INFORMATION.

GENERAL PLUMBING NOTES:

1. CONTRACTORS MUST FIELD VERIFY ALL EXISTING DIMENSIONS AND CONDITIONS PRIOR TO CONSTRUCTION.
2. VERIFY ANY PLUMBING REMOVAL PRIOR TO DEMOLITION.
3. ALL EXISTING TOILET ACCESSORIES TO REMAIN WILL BE SALVAGED BY OWNER.
4. NOT ALL KEY NOTES WILL BE ON ALL DEMOLITION DRAWINGS.

PLUMBING KEYED NOTES:

1. EXISTING WATER FOUNTAIN SHALL BE REMOVED, AND REINSTALL AFTER NEW WALL FINISH HAS BEEN INSTALLED.
2. REMOVE EXISTING WATER FOUNTAIN, AND PREP LINES FOR TO INSTALL NEW AFTER NEW WALL FINISH HAS BEEN INSTALLED.
3. EXISTING WATER FOUNTAINS SHALL REMAIN.
4. EXISTING WALL HUNG FIXTURE SHALL BE REMOVED AND REINSTALLED AFTER NEW WALL FINISH HAS BEEN INSTALLED.
5. EXISTING FLOOR MOUNTED WATER CLOSETS SHALL REMAIN.
6. EXISTING PLUMBING FIXTURES SHALL REMAIN. PROTECT FIXTURE ROOM IS BEING REFINISHED.

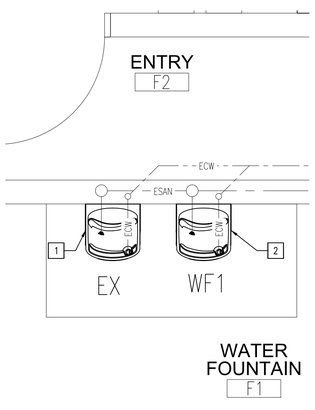

PARTIAL PLUMBING PLAN
NEW CONSTRUCTION - AREA E SCALE: 1/2" = 1'-0"

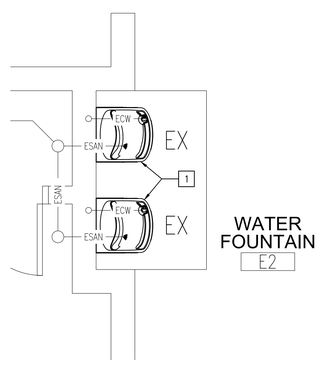

PARTIAL PLUMBING PLAN
NEW CONSTRUCTION - AREA D SCALE: 1/2" = 1'-0"

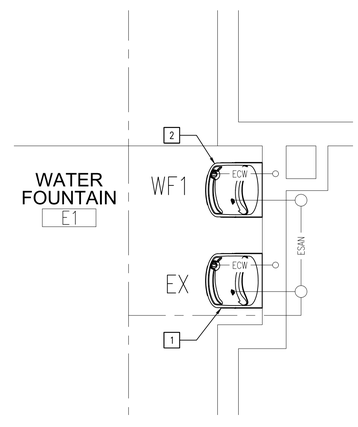

PARTIAL PLUMBING PLAN
NEW CONSTRUCTION - AREA C SCALE: 1/2" = 1'-0"

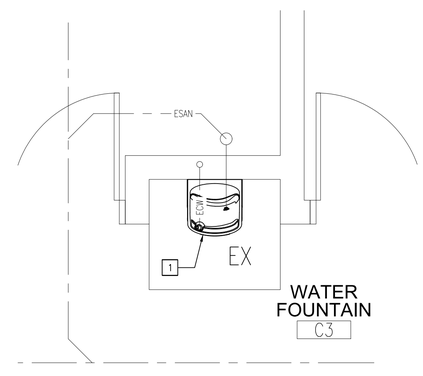

PARTIAL PLUMBING PLAN
NEW CONSTRUCTION - AREA B SCALE: 1/2" = 1'-0"

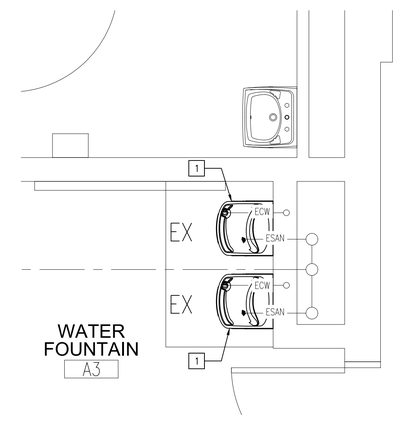

PARTIAL PLUMBING PLAN
NEW CONSTRUCTION - AREA A SCALE: 1/2" = 1'-0"

THOMAS E. CLOWN
REGISTERED
AP 19500131
STATE OF INDIANA
ARCHITECT

DATE
01-29-2026

PHASE #2 OF FINISH RENOVATIONS AT
JOHN WOOD ELEMENTARY SCHOOL
6100 E 73rd AVE
MERRILLVILLE, IN, 46410

CSK ARCHITECTS, P.C.
CROWN POINT, IN 46307
www.cskarchitects.com
6919 W. LINCOLN HIGHWAY
219-322-5950

25058

SHEET
P
1.1.1

x:\merrillville schools\25058 classroom renovation wood_phase 2\Drawings\p100 plumbing.dwg

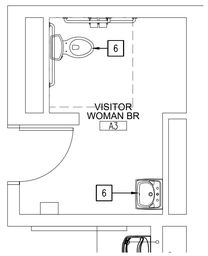

PARTIAL PLUMBING PLAN
NEW CONSTRUCTION - AREA S SCALE: 1/4" = 1'-0"

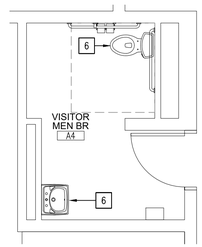

PARTIAL PLUMBING PLAN
NEW CONSTRUCTION - AREA R SCALE: 1/4" = 1'-0"

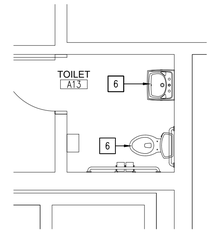

PARTIAL PLUMBING PLAN
NEW CONSTRUCTION - AREA Q SCALE: 1/4" = 1'-0"

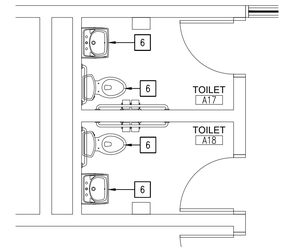

PARTIAL PLUMBING PLAN
NEW CONSTRUCTION - AREA P SCALE: 1/4" = 1'-0"

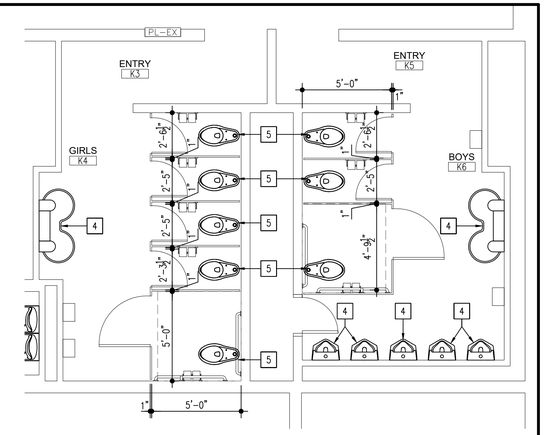

PARTIAL PLUMBING PLAN
NEW CONSTRUCTION - AREA O SCALE: 1/4" = 1'-0"

PIPING LEGEND:

- ECW — EXISTING COLD WATER SUPPLY
- EHW — EXISTING HOT WATER SUPPLY
- ESAN — EXISTING SANITARY PIPING

PLUMBING FIXTURE SCHEDULE

TAG	DESCRIPTION	SPECIFICATION	REMARKS
EWC-1	ELKAY WALL MOUNT ADA WATER COOLER	"ELKAY" EZS8L, ELKAY ezH20 WALL MOUNT ADA COOLER NON- FILTERED REFRIGERATED LIGHT GRAY, GRANITE. CHILLING CAPACITY OF 8.0 GPH AT 50°F. FURNISHED WITH FLEXI-GUARD SAFETY BUBBLER, FOR INDOOR APPLICATION. USE EXISTING CARRIER. INSTALL AT EXISTING HEIGHT.	
EWC-2	OASIS SEMI-RECESSED CUSPIDOR COMBINATION	"OASIS" SEMI-RECESSED DRINKING FOUNTAIN AND COMPANION CUSPIDOR. STAINLESS STEEL FINISH. INSTALL NEW FIXTURE WITH THE SPOUT OUTLET AT 38" AFF.	
EX	EXISTING FIXTURE	EXISTING FIXTURE.	

GENERAL PLUMBING NOTES:

1. ALL NEW PLUMBING EQUIPMENT SHALL BE SECURELY FASTENED TO THE BUILDING STRUCTURE.
2. COORDINATE WITH ARCHITECTURAL, ELECTRICAL, MECHANICAL AND STRUCTURAL PLANS FOR ADDITIONAL INFORMATION.

GENERAL PLUMBING NOTES:

1. CONTRACTORS MUST FIELD VERIFY ALL EXISTING DIMENSIONS AND CONDITIONS PRIOR TO CONSTRUCTION.
2. VERIFY ANY PLUMBING REMOVAL PRIOR TO DEMOLITION.
3. ALL EXISTING TOILET ACCESSORIES TO REMAIN WILL BE SALVAGED BY OWNER.
4. NOT ALL KEY NOTES WILL BE ON ALL DEMOLITION DRAWINGS.

PLUMBING KEYED NOTES:

1. EXISTING WATER FOUNTAIN SHALL BE REMOVED, AND REINSTALL AFTER NEW WALL FINISH HAS BEEN INSTALLED.
2. REMOVE EXISTING WATER FOUNTAIN, AND PREP LINES FOR TO INSTALL NEW AFTER NEW WALL FINISH HAS BEEN INSTALLED.
3. EXISTING WATER FOUNTAINS SHALL REMAIN.
4. EXISTING WALL HUNG FIXTURE SHALL BE REMOVED AND REINSTALLED AFTER NEW WALL FINISH HAS BEEN INSTALLED.
5. EXISTING FLOOR MOUNTED WATER CLOSETS SHALL REMAIN.
6. EXISTING PLUMBING FIXTURES SHALL REMAIN. PROTECT FIXTURE ROOM IS BEING REFINISHED.

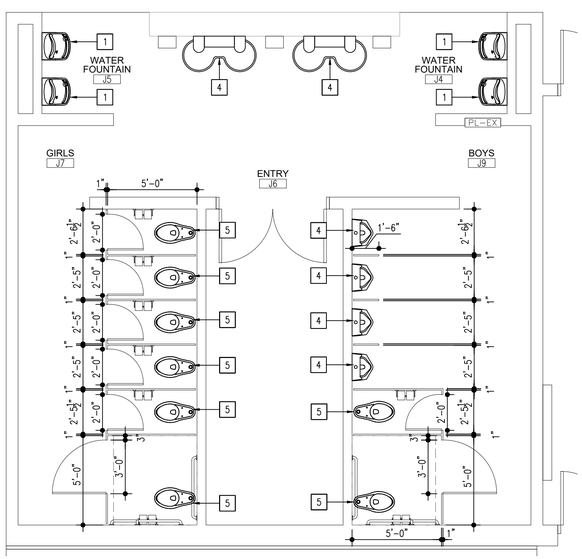

PARTIAL PLUMBING PLAN
NEW CONSTRUCTION - AREA N SCALE: 1/4" = 1'-0"

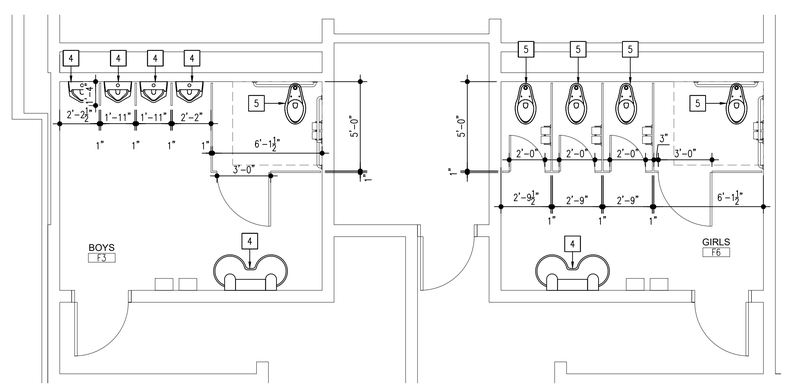

PARTIAL PLUMBING PLAN
NEW CONSTRUCTION - AREA M SCALE: 1/4" = 1'-0"

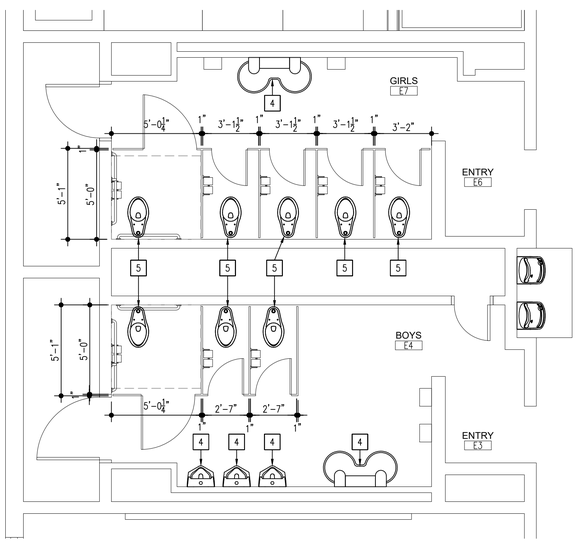

PARTIAL PLUMBING PLAN
NEW CONSTRUCTION - AREA L SCALE: 1/4" = 1'-0"

THOMAS E. FLECHSIG
REGISTERED
AR 10600131
STATE OF INDIANA
ARCHITECT

DATE
01-29-2026

PHASE #2 OF FINISH RENOVATIONS AT
JOHN WOOD ELEMENTARY SCHOOL
6100 E 73rd AVE
MERRILLVILLE, IN, 46410

CSK ARCHITECTS, P.C.
6919 W. LINCOLN HIGHWAY
219-322-5950
CROWN POINT, IN 46307
www.cskarchitects.com

25058

SHEET
P
1.1.2

x:\merrillville schools\25058 classroom renovation wood_phase 2\Drawings\p100 plumbing.dwg