Fayette County Public Schools

Facility Design & Construction

Facility Programming Guidelines

Melinda Joseph-Dezarn, AIA
Director, Facility Design & Construction
Fayette County Public Schools
859.422.0201
melinda.josephdezarn@fayette.kyschools.us

January 2026

TABLE OF CONTENTS

FOREWORD **5**

PART 1 DEFINITIONS **6**

1.1 Definitions 6

PART 2 GENERAL PLANNING **7**

2.1 Priorities 7

2.2 Technology 7

2.3 Future Expansion 7

2.4 Additional Planning Strategies 7

2.5 Life Cycle Cost Analysis 8

2.6 Building Component Requirements 8

PART 3 SCHOOL SITES **9**

3.1 General Guidelines 9

3.2 Play Areas 9

3.3 Parking 9

3.4 Loading Dock / Dumpsters 9

3.5 Exterior School Marquee 9

3.6 Exterior Mailbox 9

PART 4 STANDARD CLASSROOMS **11**

4.1 Number / Location of Classrooms 11

4.2 Standard Classroom and Resource Room Floor Areas 11

4.3 Elementary Classrooms 11

4.4 Elementary Resource Rooms 12

4.5 Middle School Classrooms (Reserved) 12

4.6 High School Classrooms (Reserved) 12

4.7 Preschool Classrooms 12

4.8 Functional Mental Disability (FMD) Classrooms 13

PART 5 SCIENCE CLASSROOMS **15**

5.1 Elementary 'Nature Studies' Classroom 15

5.2 Middle School Science Classrooms 15

5.3 High School Science Classrooms 15

PART 6 FLEXIBLE / COMPUTER CLASSROOMS **16**

6.1 Elementary School Flexible / Computer Classrooms 16

6.2 Middle School Flexible / Computer Classrooms 16

6.3 High School Flexible / Computer Classrooms 16

PART 7 ART CLASSROOMS **17**

7.1 Elementary School Art Classroom 17

7.2 Middle and High School Art Classrooms 17

PART 8 MUSIC CLASSROOMS 18
8.1 Elementary School Music Classroom 18
8.2 Middle and High School Music Classrooms 18
PART 9 LIBRARY / MEDIA CENTER 19
9.1 Library / Media Center 19
PART 10 GYMNASIUM 21
10.1 Location of Gymnasiums 21
10.2 Elementary School Gymnasium 21
10.3 Middle School Gymnasium 22
10.4 High School Gymnasium (Main & Auxiliary) 22
PART 11 AUDITORIUM 23
11.1 Elementary and Middle School Stage Platform 23
11.2 High School Auditorium 23
PART 12 ADMINISTRATIVE OFFICES 25
12.1 Elementary School Administrative Offices 25
12.2 Middle and High School Administrative Offices 31
12.3 Elementary, Middle and High School Family Resource / Youth Services Centers (FRYSC) 31
PART 13 KITCHEN / CAFETERIA 33
13.1 Kitchen 33
13.2 Cafeteria 34
PART 14 MAINTENANCE AND CUSTODIAL FACILITIES 35
14.1 Custodial Receiving 35
14.2 Custodial Closets 35
14.3 Roof Access 35
14.4 Maintenance Storage 35
14.5 Shared Washing / Dryer Room 35
14.6 General Storage 36
PART 15 TOILET & PLUMBING FIXTURES 37
15.1 General 37
15.2 Drinking Fountains 37
15.3 Ice Machine Room 37
PART 16 CIRCULATION 38
16.1 Corridors 38
16.2 Bus Drop Off Entrance 38
16.3 Ramps 38
16.4 Stairways 38
16.5 Display Cases 38

PART 17 APPENDICES 39

Appendix A Interior Elevation / Partial Plan @ Elementary School Art Room 40
Appendix B Interior Elevation / Partial Plan @ Elementary School Nature Studies Room 41
Appendix C Interior Elevation / Partial Plan @ Elementary School Music Room 42
Appendix D Kiln Room Partial Plan / Elevation 43
Appendix E1 Example Layouts of Resource Rooms 44
Appendix E2 Typical Elementary Interior Elevation @ Teacher Wardrobe & Cubbies 47
Appendix F1 Interior Elevation @ Teaching Wall – Cart Mounted IFP 48
Appendix F2 Interior Elevation @ Teaching Wall – Wall Mounted IFP 49
Appendix G Typical Reception Area 50
Appendix G1 Typical Reception Area -- Elementary 51
Appendix H Typical Reception Desk Elevations 52
Appendix I Proposed First Aid Area 53
Appendix J Exterior School Marquee 54
Appendix K Reading Recovery Observation Window 55
Appendix L FMD Room Changing Table 57
Appendix M Dental Van Connection 58
Appendix N Custodial Scrubber Cut Sheet 61

FOREWORD

These guidelines have been put together because in the past, a few projects have strayed off the renovation path by more than one architectural team when program needs versus dreams are reviewed with the faculty and staff at the school sites. This has resulted in wasted effort for the design team and disappointments for the faculty and staff. We would like to avoid both conditions whenever possible. If there is a conflict or question concerning either this guideline or the BCR, please request clarification as soon as possible to the FCPS Facility Design & Construction (FD&C) office. It should also be understood that Building Code takes precedence.

Since someone from FCPS FD&C can't always be in attendance for guidance when the architects are at the school sites, it is required that the architect produce meeting minutes to record all issues discussed with any FCPS representatives. Copies of these meeting minutes should be uploaded to eComm and/or emailed to meeting attendees and other stakeholders for review. Every attempt will be made to review the issues involved and separate real priorities from wishful thinking. Written clarifications or instructions will be issued by FCPS FD&C when required.

It is important to remember that the objectives of FCPS renovations and new construction are based on the Board priorities of:

1) Health, safety and code compliance;
2) Building structural integrity;
3) Educational function; and
4) Building enhancements.

It is also important to understand that FD&C is responsible for attaining these objectives through management of the project budget and cost-effective decision making. Your assistance in these goals will be greatly appreciated.

Melinda Joseph-Dezarn, AIA
Director, Facility Design & Construction
Fayette County Public Schools
859.422.0201
melinda.josephdezarn@fayette.kyschools.us

Revised: August 2024
Addendum #2: July 2024
Addendum #1: February 2024
Revised: August 2023
Revised: February 2023
Revised: July 2017
Major Revision: March 2012
Revised: August 2011
Revised: April 2010
Created: July 2001 (William R. Wallace, AIA)

PART 1 DEFINITIONS

1.1 Definitions

The following words and terms, when used in these guidelines, shall have the following meaning unless the context clearly indicates otherwise:

"**BCR**" means Building Components Requirements. This is a FCPS FD&C generated specifications style listing of building components for the design team to utilize during the design of the building project. "

"CFCI" means contractor furnished and contractor installed.

"**Gross square footage"** means the area derived by multiplying the outside dimensions of the space which is to the outside of the walls.

"**Net floor area or square footage**" (abbreviated by 'SF') means the area derived by multiplying the inside dimensions of the space, including all features such as casework but excluding walls, toilet rooms, general and auxiliary storage rooms.

"**OFCI**" means owner furnished and contractor installed,

"**OFOI**" means owner furnished and owner installed.

"**Recommended**" or "**Preferred**" means suggested best practices that may be used in the planning and construction of public school buildings.

"**Regulations**" means any mandatory requirement adopted by the Kentucky Department of Education (KDE) for the planning and construction of public educational facilities. The Facilities Programming and Construction Criteria Planning Guide (702 KAR 4:170) contains guidelines and requirements for school planning purposes. Those guidelines are to be adhered to as well as those presented in this document. If there is a conflict or question concerning either document, it is up to the design professional to request clarification or to discuss requesting a waiver with the Director of FCPS FD&C.

If a variance from a regulation is needed, the design professional shall put all the required paperwork together for the variance in order to present it to the Board of Education for approval at the appropriate design phase of the project.

PART 2 GENERAL PLANNING

2.1 Priorities

A. Fayette County Public Schools (FCPS) Board Policy establishes priorities for renovation / additions construction projects. They are as follows and in order of importance:

1. Address health, safety, and code compliance issues. This priority shall address any hazards that could cause occupants to become ill or experience injury. Life safety issues as well as accessibility issues are an integral part of this priority.

2. Address structural and building system integrity issues. Buildings must be whole, without leaks, with sound walls and foundations and wiring, heating, ventilation and air conditioning systems that function appropriately.

3. Address the educational function of the building. This priority shall address the renovation or additions of buildings to enable improved educational facilitation and flexibility or the location of certain subject areas in proximity to others. Projects assigned this priority will add to the efficiency and / or effectiveness of the building.

4. Address building enhancements / aesthetics. This priority shall include modifying decorative elements to improve the aesthetic qualities of the building. This priority shall involve improvements which are not necessary to carry out basic services of the building and include non-code required energy efficiency issues as well as finishes and furnishings.

B. Severe Weather and Shelter-in-Place for Renovations

1. Provide a minimum of 2.5 SF per person in a protected space that does not have a view to glass.

2. If possible, provide a reinforced roof structure over this area. This needs to be discussed on a case-by-case basis and your structural engineer will need to be involved in the discussions.

3. Do not plan on large, unsupported span areas for severe weather sheltering. These spaces do not afford adequate protection.

4. Be mindful of the orientation of the building's safe area. (Many tornadoes track from SW to NE.).

C. In general, the planning of the site and of the building shall consider the Crime Prevention Through Environmental Design (CPTED).

D. In the case of new construction, provide storm shelter as Building Code requires. Review location with FCPS FD&C.

2.2 Technology

A. Refer to the Kentucky Educational Technology System (KETS) requirements for all communications and data requirements. Coordinate with FCPS Technology for specific requirements.

B. Design team/engineer shall fill out and submit all paperwork for this and can ask for assistance from FCPS Technology if needed.

2.3 Future Expansion

A. While planning a new school or a renovation / addition to an existing school, it is highly recommended that consideration be given to provide for future expansion and modifications that will not impact the relocation of major utilities.

B. While it is important to allow for future classroom expansion space, it is equally important to allow for core spaces such as the Media Center, Administrative areas and Cafeteria / Kitchen areas to have future expansion / flexibility.

2.4 Additional Planning Strategies

A. High Performance School Buildings

1. High performance strategies must be supported by cost-to-benefit to Owner data.

2. Energy Star shall be the minimum high-performance strategy.

3. High performance school buildings support a school's mission by increasing student performance, increasing attendance, and increasing teacher satisfaction and retention. There are several additional benefits as well relating to reduced exposure to hazardous environmental toxins and reduced operating costs. Consideration should be given to energy efficient building systems by setting design goals prior to design and construction.

4. The High Performance School Building's Resource and Strategy Guide presents a step-by-step method for managing the design process in ways that ensure the desired outcome. FCPS has adopted these strategies to help improve both student achievement and building performance. The design team should consider best practices in the following components of a facility:

    a. Maximize use of natural light and optimized building orientation.

    b. Energy efficient building systems and fixtures

    c. Indoor air quality

    d. Building materials and resource selection

    e. Recycling of construction waste and building materials, when feasible

    f. Life cycle cost analysis

2.5. Life Cycle Cost Analysis

A. Life cycle cost analysis to assess the total cost of building ownership over time should be conducted during the design development of a school construction project. Costs should include initial construction costs as well as energy / utility costs, maintenance, repair and replacement costs for a period of thirty years. When proposing a high-performance design strategy, it is important to utilize life cycle cost analysis data to present to the owner for review.

2.6 Building Component Requirements

A. It is imperative that the design team familiarize themselves with the standards and recommendations in the BCR.

B. It is design team's responsibility to make sure any square footage called out above the KDE guidelines should come out of the SBDM allowances listed in the model programs. The design team should make an Excel file showing the program developed compared to the KDE model program. This should be presented to FCPS FD&C and turned in with the SD and DD submittals for review and approval.

PART 3 SCHOOL SITES

3.1 General Guidelines

A. Provide a separate bus loading / unloading driveway from all other vehicular circulation on the site.

B. Provide adequate queue space for parent drop-off and pick-up vehicles on the building property.

C. Ensure that the Kitchen loading dock is accessible to a semi-tractor trailer without having to back into or out of the driveway entrance from the public way.

D. It is essential that driveways and adjacent improvements be arranged to provide a safe driving view on the site and on the approach and exit from the site.

E. Adequate site lighting is essential to safety and security of the school and its occupants. Ensure that site lighting is shielded such that it does not cause glare into neighboring property.

3.2 Play Areas

A. Coordinate with FCPS Grounds and Custodial Support on exact requirements for play areas at each school site. Walkways and pathways to and from the school building to play areas and other areas of after-school activities on the school grounds must be accessible.

B. Preschool Classrooms are to have direct access to a fenced in play area that is a minimum of 4,800 SF (60’ x 80’) in area. The enclosed play area is to have (1) 3’ wide gate and (1) 10’ wide double gate. There shall be a 10’ x 56’ paved concrete surface located inside the enclosure. The surface of the play area should be ~~set up to receive a pour-in-place soft surface~~discussed with FCPS Grounds. Verify size with KDE requirements.

3.3 Parking

A. Where possible, provide 1.5 spaces for each full-time teacher and staff member.

B. Provide at least 5 parking spaces for kitchen and custodial staff adjacent to the Kitchen and Custodial Receiving areas.

C. Provide a centralized visitor parking area that has convenient access to the main building entry. Confirm the number needed during the design of the project.

D. Provide space for LifeLine Mobile Dental Van (8’-6” x 40’) to park with convenient access to the school building (without having to cross parking lots to gain access). Provide the proper hook-ups near this location, as well. Consult with FD&C for type of building connection receptacle. See Appendix M for more information.

3.4 Loading Dock / Dumpsters

A. Loading docks shall be at the same level as the adjacent floor surface, shall be 44” to 52” above the adjacent pavement, and shall be equipped with a manual dock leveler. Exterior doors from the dock into the building (such as the Kitchen or Custodial Receiving) shall be a minimum of 44" wide. Interior doors from Custodial Receiving into the building corridor shall also be 44" wide.

B. When in design, verify with FCPS Risk Management if removable railings are required.

C. Provide space for three dumpsters easily accessible from the Kitchen area. This space is to be enclosed on three sides and open on the front end for easy access. Confirm the size and number of the dumpsters during the design of the project with FCPS Child Nutrition and FCPS Grounds and Custodial Support.

3.5 Exterior School Marquee

A. Provide one 4’ x 6’ non-illuminated, double-sided marquee sign. Refer to Appendix J for applicable details.

3.6 Exterior Mailbox

A. Confirm with FCPS FD&C if an exterior mailbox (CFCI) is required. Typically, it is only required for addresses considered a rural route.

B. The basis of design is black powder coat finish, galvanized steel and mounted on a 4”x4” wooden post.

C. Confirm with FCPS FD&C for placement of the post/mailbox.

PART 4 STANDARD CLASSROOMS

4.1 Number / Location of Classrooms

A. The number of classrooms required in any school project is determined by projected enrollment and pupil / teacher ratios of the facility. Typically, one classroom is to be provided for each twenty-five (25) students in the total school enrollment.

B. All classrooms are to be located away from potential sources of noise and distraction while maintaining access to and from all administrative, instructional, and support spaces.

4.2 Standard Classroom and Resource Room Floor Areas

A. The minimum net floor area for general classrooms, including all features of self-contained storage but excluding classroom toilets and general storage should be as indicated below:

Elementary	800 SF
Middle	750 SF
High	750 SF

B. The minimum net floor area for Resource Rooms, including all features of self-contained storage, should be as indicated below, but consideration shall be given to these spaces being turned into smaller spaces if needed at a later date (refer to Appendix E1):

Elementary	200 - 400 SF
Middle	375 SF
High	375 SF

C. Minimum 'Room Dimension' means the minimum clear distance between face of wall and face of wall, or face of fixed equipment. For Standard Classrooms, this minimum dimension is 22'·0". For Resource Classrooms this dimension is 11'-0".

4.3 Elementary Classrooms

A. Preferred finishes include rubber floor or luxury vinyl tile and acoustical ceiling tile with a minimum ceiling height of 8’-8”.

B. Provide the following built-in casework (refer to Appendix E2 for applicable details):

1. 5 linear feet of base and wall cabinets with accessible sink
2. (1) 48” x 84” x 24” teacher wardrobe
3. (14) two-student cubbies
4. (1) 8” x 8” pencil sharpener block. Ensure that the wall surface around (especially below) the pencil sharpener block is treated to resist graphite dust and/or allow frequent hard cleaning. Pencil sharpener is OFOI.

C. Provide (1) 8’ x 4’ tack board, (1) 4’ x 4’ tack board, and (1) 4’ x 4’ marker board.

D. Provide one 8’ x 4’ marker board for use with (OFOI) Interactive Flat Panel or current technology system. Review with FCPS Technology during design. Refer to Appendix F2 for applicable details.

E. Coordinate electrical, communication requirements and provide space for the following (OFOI) furnishings:

1. 48” x 30” teacher’s desk with chair
2. 48” x 24” teacher’s desk for computer
3. (2) 4-drawer file cabinets
4. (4) 48” x 29” x 12” bookcases
5. (1) 48” x 60” x 12” bookcase

6. (14) 48” x 24” two-student desks ***or*** (7) 60” x 30” student tables with chairs
7. (1) 48” dia. group worktable ***or*** 72” x 36” half-moon table and chairs

4.4 Elementary Resource Rooms

A. Preferred finishes include rubber floor or luxury vinyl tile and acoustical ceiling tile with a minimum ceiling height of 8’-8”.

B. Provide the following built-in casework (refer to Appendix E2 for applicable details):
1. (1) 48” x 84” x 24” teacher wardrobe
2. (1) 8” x 8” pencil sharpener block. Ensure that the wall surface around (especially below) the pencil sharpener block is treated to resist graphite dust and/or allow frequent hard cleaning. Pencil sharpener is OFOI.

C. Provide (1) 4’ x 4’ tack board.

D. Provide one 8’ x 4’ marker board for use with (OFOI) Interactive Flat Panel or current technology system. Review with FCPS Technology during design. Refer to Appendix F2 for applicable details.

E. Coordinate electrical, communication requirements and provide space for the following (OFOI) furnishings:
1. 48” x 30” teacher’s desk with chair
2. 48” x 24” teacher’s desk for computer
3. (2) 4-drawer file cabinets
4. (2) 48” x 29” x 12” bookcases
5. (1) 48” x 60” x 12” bookcase
6. (7) 48” x 24” two-student desks ***or*** (3) 60” x 30” student tables with chairs
7. (1) 48” dia. group worktable ***or*** 72” x 36” half-moon table and chairs

F. Refer to Appendix E1 and E2 for applicable details.

4.5 Middle School Classrooms (Reserved)

4.6 High School Classrooms (Reserved)

4.7 Preschool Classrooms

A. There shall be two (2) Preschool Classrooms (850 SF each) per Elementary School. Preschool Classrooms are to have direct access to a fenced outdoor play area. Refer to the “School Sites” section for more information, unless otherwise directed by Director of Facility Design & Construction.

B. Preferred finishes include rubber floor or luxury vinyl tile and acoustical ceiling tile with a minimum ceiling height of 8’-8”. Preferred finishes in the Toilet Room include porcelain floor tile and ceramic tile wainscot.

C. Provide an accessible Toilet Room (50 SF) with a floor-mounted water closet (12” seat height), lavatory (31” to rim) and wall-mounted changing table (confirm changing table with FCPS FD&C.) The door to the space shall swing outwards, have non-pinching / continuous hinge door hardware, and there shall be an occupancy indicator light on the exterior of the room tied to the light switch.

D. Provide a Shared Storage Room (80 SF) common to both Preschool Classrooms.

E. Provide the following built-in casework (refer to Appendix E2 for applicable details):
1. 5 linear feet of base and wall cabinets with accessible sink
2. (1) 48” x 84” x 24” teacher wardrobe
3. (10) two-student cubbies

4. (1) 8” x 8” pencil sharpener block. Ensure that the wall surface around (especially below) the pencil sharpener block is treated to resist graphite dust and/or allow frequent hard cleaning. Pencil sharpener is OFOI.

F. Provide (1) 8’ x 4’ tack board, (1) 4’ x 4’ tack board, and (1) 4’ x 4’ marker board.

G. Provide one 8’ x 4’ marker board for use with (OFOI) Interactive Flat Panel or current technology system. Review with FCPS Technology during design. Refer to Appendix F1 for applicable details.

H. Coordinate electrical, communication requirements and provide space for the following (OFOI) furnishings:

1. 48” x 30” teacher’s desk with chair
2. 48” x 24” teacher’s desk for computer
3. (2) 4-drawer file cabinets
4. (4) 48” x 29” x 12” bookcases
5. (1) 48” x 60” x 12” bookcase
6. (10) 48” x 24” two-student desks ***or*** (4) 60” x 30” student tables with chairs
7. (1) 48” dia. group worktable ***or*** 72” x 36” half-moon table and chairs

4.8 Functional Mental Disability (FMD) Classrooms

A. One self-contained FMD Classroom (900~~850~~ SF) is required at a minimum at each Elementary/Middle/High School site. Verify with FCPS FD&C during programming if more may be needed. *Take additional square footage out of the* “Allowance for SBDM Instructional Programs” as listed in the KDE programming document.

B. When doing a Middle or High School project, another FMD Classroom shall be included and should be laid out with a life skills area that includes a sink, refrigerator, icemaker, microwave oven, range and hood, counterspace for training and washer and dryer areas if a shared room for the washer and dryer has not been used. All equipment is OFOI. *Take additional square footage out of the* “Allowance for SBDM Instructional Programs” as listed in the KDE programming document.

C. Preferred finishes include rubber floor or luxury vinyl tile and acoustical ceiling tile with a minimum ceiling height of 8’-8”. Preferred finishes in the Toilet Room include porcelain floor tile and ceramic tile wainscot.

D. Provide an accessible Toilet Room with a wall-mounted water closet (17” seat height), lavatory (34” to rim), a shower, and space for a 58” x 24” changing table (OFOI). The door to the space shall swing outwards, have non-pinching door hardware, and there shall be an occupancy indicator light on the exterior of the room tied to the light switch. Refer to Appendix L for changing table cut sheet.)

E. Provide a Storage Room (30 SF) with space for a 60” x 12” (OFOI) shelving unit.

F. Provide structural support (300 lbs. minimum) for a ceiling mounted physical therapy suspension hammock (OFOI) to be located out of the circulation path of the room. Review location and mark location on the ceiling tile with users, FCPS FD&C and FCPS Maintenance.

G. Discuss with FCPS FD&C if a seclusion room is needed.

~~G.~~H. Provide the following built-in casework (refer to Appendix E2 for applicable details):

1. 5 linear feet of base and wall cabinets with accessible sink
2. (1) 48” x 84” x 24” teacher wardrobe
3. (4) two-student cubbies (in Elementary Schools only)
4. (1) 8” x 8” pencil sharpener block. Ensure that the wall surface around (especially below) the pencil sharpener block is treated to resist graphite dust and/or allow frequent hard cleaning. Pencil sharpener is OFOI. Review location with FCPS Maintenance and users after built.

~~H.~~I. Provide (1) 8’ x 4’ tack board, (1) 4’ x 4’ tack board, and (1) 4’ x 4’ marker board.

~~I.~~J. Provide one 8’ x 4’ marker board for use with (OFOI) Interactive Flat Panel or current technology system. Review with FCPS Technology during design. Refer to Appendix F2 for applicable details.

~~J.~~K. Coordinate electrical, communication requirements and provide space for the following (OFOI) furnishings:

1. 48” x 30” teacher’s desk with chair
2. 48” x 24” teacher’s desk for computer
3. (2) 4-drawer file cabinets
4. (2) 48” x 29” x 12” bookcases
5. (1) 48” x 60” x 12” bookcase
6. (5) 48” x 24” two-student desks with chairs
7. (1) 48” dia. group worktable ***or*** 72” x 36” half-moon table and chairs

PART 5 SCIENCE CLASSROOMS

5.1 Elementary 'Nature Studies' Classroom

A. Provide one Nature Studies Classroom (900 SF). *Take additional square footage out of the* "Allowance for SBDM Instructional Programs" as listed in the KDE programming document.

B. Preferred finishes include rubber floor or luxury vinyl tile and acoustical ceiling tile with a minimum ceiling height of 8'-8".

C. Provide the following built-in casework (refer to Appendix E2 for applicable details):

1. Minimum 28 linear feet of base and wall cabinets with two accessible sinks
2. (1) 48" x 84" x 24" teacher wardrobe
3. (1) 8" x 8" pencil sharpener block. Ensure that the wall surface around (especially below) the pencil sharpener block is treated to resist graphite dust and/or allow frequent hard cleaning. Pencil sharpener is OFOI.

D. Provide (1) 8' x 4' tack board, (1) 4' x 4' tack board, and (1) 4' x 4' marker board.

E. Provide one 8' x 4' marker board for use with (OFOI) Interactive Flat Panel or current technology system. Review with FCPS Technology during design. Refer to Appendix F1 for applicable details.

F. Coordinate electrical, communication requirements and provide space for the following (OFOI) furnishings:

1. 48" x 30" teacher's desk with chair
2. 48" x 24" teacher's desk for computer
3. (2) 4-drawer file cabinets
4. (4) 48" x 29" x 12" bookcases
5. (1) 48" x 60" x 12" bookcase
6. (7) 60" x 30" student tables with chairs

5.2 Middle School Science Classrooms

A. Refer to Elementary standards above, as well as KDE standards.

5.3 High School Science Classrooms

A. Refer to Elementary standards above, as well as KDE standards.

PART 6 FLEXIBLE / COMPUTER CLASSROOMS

6.1 Elementary School Flexible / Computer Classrooms

A. Provide one ~~Computer~~ Flexible Classroom (900 SF) at each elementary school that can be used as either a computer lab or maker space.

B. Preferred finishes include rubber floor or luxury vinyl floor tile and acoustical ceiling tile with a minimum ceiling height of 8'-8". It may be discussed to use polished concrete as the flooring and an open-ceiling system. Discuss with FCPS FD&C during design.

C. Provide the following built-in casework (refer to Appendix E2 for applicable details):

1. Minimum 28 linear feet of base and wall cabinets with two accessible sinks.
2. (1) 48" x 84" x 24" teacher wardrobe
3. (1) 8" x 8" pencil sharpener block. Ensure that the wall surface around (especially below) the pencil sharpener block is treated to resist graphite dust and/or allow frequent hard cleaning. Pencil sharpener is OFOI.

D. Provide (1) 8' x 4' tack board, (1) 4' x 4' tack board, and (1) 4' x 4' marker board.

E. Provide one 8' x 4' marker board for use with (OFOI) Interactive Flat Panel or current technology system. Review with FCPS Technology during design. Refer to Appendix F1 for applicable details.

F. Coordinate electrical, communication requirements and provide space for the following (OFOI) furnishings:

1. If it is a flexible lab or maker space, provide a wall of built in case work with a sink that has a plaster trap. Accommodate access to under-sink grease traps and plaster traps. There should be some counter space with many plugs as part of this layout.
2. If it is a computer lab, provide the following:
   a. 60" x 30" teacher's desk with chair
   b. 36" x 24" teacher's desk for computer
   c. (2) 4-drawer file cabinets
   d. (4) 48" x 29" x 12" bookcases
   e. (1) 48" x 60" x 12" bookcase
   f. (14) 60" x 30" two-student workstations with chairs

6.2 Middle School Flexible / Computer Classrooms

A. Refer to Elementary standards above, as well as KDE standards.

6.3 High School Flexible / Computer Classrooms

A. Refer to Elementary standards above.

B. In the KDE standards a computer classroom is called out. Continue to provide this space, but it should be designed to be a flexible space with many power and data connections around the perimeter of the room and possibly from the ceiling.

PART 7 ART CLASSROOMS

7.1 Elementary School Art Classroom

A. Provide one Art Classroom (1,050 SF) at each elementary school. Verify the need for an additional exit per occupancy requirements. Take additional square footage out of the "Allowance for SBDM Instructional Programs" as listed in the KDE programming document.

B. Provide one Kiln Room (150 SF) within the Art Classroom that contains the kiln (OFOI) separated from the remainder of the room with a woven wire partition. Provide the connection for the kiln down-draft vent system (CFCI). Refer to Appendix D for applicable details. Take additional square footage out of the "Allowance for SBDM Instructional Programs" as listed in the KDE programming document.

C. Preferred finishes include rubber floor or luxury vinyl tile and acoustical ceiling tile with a minimum ceiling height of 8'-8". Preferred finishes in the Kiln Room are sealed concrete floors and exposed ceiling.

D. Provide the following built-in casework (refer to Appendix E2 for applicable details):

1. Minimum 20 linear feet of base and wall cabinets with 12" deep art sink with plaster trap. Accommodate access to under-sink plaster traps.
2. (1) 48" x 84" x 24" teacher wardrobe
3. (1) 8" x 8" pencil sharpener block. Ensure that the wall surface around (especially below) the pencil sharpener block is treated to resist graphite dust and/or allow frequent hard cleaning. Pencil sharpener is OFOI.

E. Discuss providing a stainless-steel art sink in addition to the ADA sink.

~~E.~~F. Provide (1) 8' x 4' tack board, (1) 4' x 4' tack board, and (1) 4' x 4' marker board.

~~F.~~G. Provide one 8' x 4' marker board for use with (OFOI) Interactive Flat Panel or current technology system. Review with FCPS Technology during design. Refer to Appendix F1 for applicable details.

~~G.~~H. Coordinate electrical, communication requirements and provide space for the following (OFOI) furnishings:

1. 60" x 30" teacher's desk with chair
2. 36" x 24" teacher's desk for computer
3. (2) 4-drawer file cabinets
4. (4) 48" x 29" x 12" bookcases
5. (1) 48" x 60" x 12" bookcase
6. (14) 60" x 30" two-student workstations with chairs
7. (1) IFP

~~H.~~I. Plaster traps should be included in the plumbing. Coordinate with the casework for easy accessibility for maintenance.

7.2 Middle and High School Art Classrooms

A. Provide two (2) Art Classrooms at approximately 1,200 SF each. One room should be designed for Digital Art and the other room more traditional Art.
B. Provide one kiln room (150 SF) like above.
C. Other standard items similar to Items C – H above.

PART 8 MUSIC CLASSROOMS

8.1 Elementary School Music Classroom

A. Provide one Music Classroom (1,050 SF) at each elementary school. Verify the need for an additional exit per occupancy requirements. Take additional square footage out of the "Allowance for SBDM Instructional Programs" as listed in the KDE programming document.

B. Provide one Storage Room (150 SF) within the Music Classroom that contains space for a minimum of (8) 36" x 72" x 18" musical instrument shelving (OFOI). Take additional square footage out of the "Allowance for SBDM Instructional Programs" as listed in the KDE programming document.

C. Preferred finishes include rubber floor or luxury vinyl tile and acoustical ceiling tile (or exposed structure with acoustical treatment) with a minimum ceiling height of 12'-0".

D. Provide the following built-in casework (refer to Appendix E2 for applicable details):

1. Minimum 24 linear feet of base and wall cabinets with accessible sink
2. (1) 48" x 84" x 24" teacher wardrobe
3. (1) 8" x 8" pencil sharpener block. Ensure that the wall surface around (especially below) the pencil sharpener block is treated to resist graphite dust and/or allow frequent hard cleaning. Pencil sharpener is OFOI.

E. Provide (1) 8' x 4' tack board, (1) 4' x 4' tack board, and (1) 4' x 4' marker board with music staff.

F. Provide one 8' x 4' marker board for use with (OFOI) Interactive Flat Panel or current technology system. Review with FCPS Technology during design. Refer to Appendix F1 for applicable details.

G. Coordinate electrical, communication requirements and provide space for the following (OFOI) furnishings:

1. 48" x 30" teacher's desk with chair
2. 48" x 24" teacher's desk for computer
3. (2) 4-drawer file cabinets
4. (4) 48" x 29" x 12" bookcases
5. (1) 48" x 60" x 12" bookcase
6. (30) chairs without tables
7. (1) IFP

8.2 Middle and High School Music Classrooms

(Review the number of students the school expects to be in these spaces. Acoustical treatments should be planned. (Acoustics studies should be considered to optimize the space.)

A. Provide one Band Room (2,500 SF) at each middle or high school.

B. Provide one Orchestra Room (2,500 SF) at each middle or high school.

C. Provide one Vocal Music Room (1,000 SF) at each middle or high school.

D. Provide appropriate storage for instruments, music, etc.

E. Provide Practice Rooms with this program square footage.

F. Provide Office spaces if requested but could also be combined with storage.

~~F.~~G. In high school band room, provide electrical connections for refrigerator and deep freezer (OFOI).

PART 9 LIBRARY / MEDIA CENTER

9.1 Library / Media Center

A. The Library / Media Center is to be located away from potential sources of noise and distraction while maintaining access to and from all administrative, instructional, and support spaces. It is recommended that the Library / Media Center be located centrally within the school building. However, its location should be able to be used after school hours while the rest of the building remains secured.

B. The minimum net floor area for the Library / Media Center, including all features of self-contained storage should be as indicated below:

For 500 students, provide 3,125 SF

For 600 students, provide 3,650 SF

For 700 students, provide 4,260 SF

For 750 students, provide 4,565 SF

For more than listed above, refer to the KDE Model Program SF.

C. At least 70% of the area in the Library / Media Center shall be dedicated to reading and stack area. The layout of the Library / Media Center shall include tables and chairs to seat no less than 60 students. Seating area for 60 students shall allow presentations to two separate groups or one combined group. This seating area is to be configured such that audio / visual presentations can be viewed on an Interactive Flat Panel or current technology system. This will require that the Library / Media Center have a means to darken the space.

D. Design team to include the seating, shelving, and circulation desk for the Media Center and this space should be planned and coordinated in the construction documents. Maker's space areas should also be included in the Media Center square footage.

E. Perimeter and free-standing shelving units shall accommodate 12 volumes per student with an additional 20% for future expansion.

F. Circulation Desk:

1. It is critical for the circulation desk to be located such that the Librarian can have visual control over the entire Library / Media Center including all exit ways from the library. However, the staff often use this space for large meetings and need to be able to seat many for large presentations, therefore flexibility should be considered.

2. It is preferred that the circulation desk be located so that the doors can be watched and so that it does not restrict the room's space if an event is to be held in it after school hours.

~~2.~~3. Provide push button control to open one (1) door from hallway into Media Center.

G. The main entrance to the Library / Media Center should be open and inviting while being visually controlled by the Librarian. Recess the main entrance so that the doors do not swing into the main corridor causing any conflict with corridor traffic.

H. Preferred finishes include modular carpet tile (except in the makers space) and acoustical ceiling tile (or exposed structure with acoustical treatment) with a minimum ceiling height of 10'-0".

I. Acoustical treatments should be planned. (Acoustics studies should be considered to optimize the space.)

J. Provide (1) 4' x 4' tack board and (1) 8' x 4' tack board.

K. Coordinate electrical, communication requirements and provide ~~space for~~ the following (~~OFOI~~CFCI) furnishings:

1. (10) 60" x 36" student tables with (5) chairs each

2. (2) 42” dia. student tables with (4) chairs each
3. (12) 62” x 32” computer tables with (2) chairs each
4. (2) Book trucks (one of which is depressible)
5. (4) Lounge chairs and side table
6. If book drop is located in wall from hallway, coordinate during design.
7. Review furniture with FCPS FD&C Director before ordering. Furniture should be on casters and provide flexibility.

L. Provide a Workroom (200 SF in Elementary Schools, 250 SF in Middle and High Schools) within the Library / Media Center with an interconnecting door with a view lite to the stack area.
   1. Provide the following built-in casework (refer to Appendix E2 for applicable details):
      a. 5 linear feet of base and wall cabinets with accessible sink
      b. (1) 48” x 84” x 24” teacher wardrobe
      c. (1) 41” x 37” x 35” flat paper file
   2. Preferred finishes include rubber floor or luxury vinyl floor tile and acoustical ceiling tile with a minimum ceiling height of 8’-8”.
   3. Coordinate electrical, communication requirements and provide space for the following (OFOI) furnishings:
      a. 48” x 30” teacher’s desk with chair
      b. 48” x 24” teacher’s desk for computer
      c. (2) 4-drawer file cabinets
      d. (1) 48” dia. table and (4) chairs

M. Provide an Audio / Visual Storage Room (200 SF in Elementary Schools, 250 SF in Middle and High Schools) within the Library / Media Center. The door to this room should be controlled by the Librarian.
   1. Preferred finishes include rubber floor or luxury vinyl floor tile and acoustical ceiling tile with a minimum ceiling height of 8’-8”.

N. Provide a Television Studio (120 SF in Elementary Schools, 150 SF in Middle and High Schools) within or immediately adjacent to the Library / Media Center with an interconnecting door and a view lite to the stack area.
   1. Preferred finishes include modular carpet tile flooring and acoustical ceiling tile with a minimum ceiling height of 8’-8”.
   2. Provide (1) 4’ x 4’ tack board
   3. Provide a minimum 5’ x 7’ green screen backdrop and dimmable surface mounted light track.
   4. Provide the following (OFOI) furnishings:
      a. (1) 48” x 30” table and (2) chairs

PART 10 GYMNASIUM

10.1 Location of Gymnasiums

A. Gymnasiums are to be located remotely from instructional spaces in order to minimize sound transmission issues. Gymnasiums should be located in close proximity to the outdoor play area and public parking areas. It is recommended that there be a secondary entrance into the Gymnasium for use after school hours. It is also recommended that the Gymnasium be capable of being isolated from the rest of the school building to minimize traffic in the school building after hours. Unless otherwise directed by FCPS, the gymnasium shall be considered the priority location for the Shelter-in-Place procedure, unless it is a new building where a Storm Shelter is required by code. Review this with FCPS FD&C and FCPS Risk Management and Safety.

10.2 Elementary School Gymnasium

A. The minimum net floor area shall be 5,500 SF. (This area does not include the space required for the Instructor Office and P.E. Storage.) The basketball court shall be a minimum of 42’ x 74’ with a minimum clear space of 6’-0” on either sideline and a minimum clear space of 8’-0” at each end.

B. In new construction, provide bleachers to seat the entire student population for non-athletic functions. In renovation / addition projects, provide bleachers if space permits and maximize the seating capacity. Bleachers are to be retractable (electrically operated.) The square footage for these shall not come out of the other spaces. *Take additional square footage out of the* “Allowance for SBDM Instructional Programs” as listed in the KDE programming document.

C. Preferred finishes include wood sports floor or vinyl sports flooring with basketball court striping of compatible material. It is preferred that ceilings be left exposed and *acoustically treated.* There should be a minimum of 20’-0” unobstructed clearance above the basketball court. Provide a minimum of 20 linear feet of wall mounted padding at each end of the basketball court for safety purposes. Consider design opportunities to maximize the acoustical treatment on upper gym walls and the underside of roof deck.

D. Provide (2) electrically retractable basketball goals at the main court and (2) electrically retractable basketball goals on the court sidelines for practice. Basketball goals in elementary schools shall be adjustable to provide a rim height between 8'-0" and 10'-0".

E. Provide power and communications for a scoreboard to be installed at a future date.

F. Provide (2) heavy-duty volleyball standard inserts if a wood sports floor is being used.

G. Provide protective cages on all thermostats, alarms, switches, etc.

H. Provide an Instructor Office (150 SF) that contains a private toilet and accessible transfer type shower (Note that a shower seat is not to be installed, but that blocking for a shower seat is to be installed for future installation).

1. Preferred finishes include rubber floor or luxury vinyl floor tile and acoustical ceiling tile with a minimum ceiling height of 8’-8”.
2. Preferred finishes in the toilet / shower space are porcelain floor tile and ceramic tile wainscot.
3. Coordinate electrical, communication requirements and provide space for the following (OFOI) furnishings:
    a. 48” x 30” teacher’s desk with chair
    b. 48” x 24” teacher’s desk for computer
    c. (2) 4-drawer file cabinets
    d. (1) 48” x 60” x 12” bookcase
    e. (2) Guest chairs

I. Provide Physical Education Storage Room (300 SF)

1. Preferred finishes include sealed concrete floor and exposed structure ceiling.

10.3 Middle School Gymnasium

A. Refer to KDE standards.

10.4 High School Gymnasiums (A main gym and an auxiliary gym)

A. Refer to KDE standards.

PART 11 AUDITORIUM

11.1 Elementary and Middle School Stage Platform

A. In new construction projects it is preferred that the Stage Platform be located between the Gymnasium and the Cafeteria where possible. In Renovation / Addition projects, the Stage Platform is to be located adjacent to the Gymnasium, preferably parallel to the bleachers.

B. The minimum net floor area shall be 1,200 SF (including the Storage Room) and shall be raised above the adjacent floor 12" to 14" (2 risers). The Stage Platform shall be accessible by means of a ramp. Take additional square footage out of the "Allowance for SBDM Instructional Programs" as listed in the KDE programming document.

C. Preferred finishes include rubber or luxury vinyl tile flooring. It is preferred that ceilings be left exposed and acoustically treated. There should be a minimum of 20'-0" unobstructed clearance above the floor.

D. Special consideration should be given to the mechanical equipment and associated ductwork in or adjacent to the Stage Platform so that noise is reduced to a maximum level of Room Criteria (RC) 35-40.

E. Provide rear and side curtains (cyclorama) installed on an overhead walk-along draw track.

F. Provide dimmable track lighting both interior to the Stage Platform and immediately adjacent to the Stage Platform. It is also preferred that an appropriately sized, recessed, and motorized projection screen be suspended from the structure above for presentations to large audiences. Review and coordinate with FCPS Technology during design.

G. Where the Stage Platform is located between the Gymnasium and the Cafeteria, provide movable partitions along the cafeteria opening. Review this with FCPS Safety & Security and FD&C.

H. Provide a Storage Room (200 SF)

1. Preferred finishes include sealed concrete floor and exposed structure ceiling.

11.2 High School Auditorium

A. In new construction, it is preferred that this be located near the Band, Orchestra, Vocal Music, and Drama Classrooms for easier access to the stage, whereas those rooms could potentially serve as a "green room."

B. In new construction, seating capacity shall have a minimum area based on the student enrollment for one class of students. For example, the freshman class/9th grade would be able to gather here for a meeting.

C. Support Spaces should include:

1. Stage (must be accessible from the Auditorium side)
    a. Preferred finishes include wood flooring.
2. Dressing rooms
3. Accessible single toilets (2)
    a. Refer to preferred finishes in standard toilet room.
4. Ticket booth / light concessions
    a. Preferred finishes include sealed concrete flooring.
5. Sound vestibules at doorways
6. Storage room (does not have to be directly attached, but it should be near for easy access).
7. Consider your door sizes when designing access.
8. Musician area in Auditorium near stage = 400 SF
9. Control room
    a. Sound systems and lighting controls should also be planned.

D. Acoustical treatments should be planned. (Acoustics studies should be considered to optimize the space.)

PART 12 ADMINISTRATIVE OFFICES

12.1 Elementary School Administrative Offices

A. All spaces within the administrative suite as well as perimeter partitions around the suite itself are to have acoustical privacy.

B. The number of administrative offices may increase if there are more students in the building. If SF listed below is higher than KDE Model Program, then take additional square footage out of the "Allowance for SBDM Instructional Programs" as listed in the KDE programming document.*

C. In new schools as well as renovations / additions, the following spaces are to be provided:

1. Security Vestibule

   a. Locate at main point of daily entry for the public arrival into the building. Coordinate design with electronic locks, cameras, etc. with receptionist and/or Attendance office (only in Middle and High Schools.)

   b. Coordinate design with current security system used by FCPS in order to ensure proper windows and such needed to check in visitors.

   c. Window to be single-pane glass with pass through for documents and a speaker box for communication.

   d. Provide space for metal detectors and tables (72"l x 18"w x 29-1/2"h) to be coordinated with FCPS FD&C and Risk Management and Safety. Storage to be provide in close proximity for these when not in use.

   e. See https://www.ceia.net/security/product.aspx?a=OPENGATE

2. Student Entry Vestibule Areas

   a. One should be located directly in alignment with main security vestibule.

   b. One should be located near the bus drop off entry.

   c. The number of students and the design at a school may determine that more than two entrances are needed in the morning. If so, metal detectors may be used, if it is a Middle School or High School. Therefore, the length and width of this along with the tables should be discussed with our security personnel for student queueing in the AM.

   d. Storage areas for these metal detectors and tables (72"l x 18"w x 29-1/2"h) should be taken into consideration for when they are not in use.

   e. See https://www.ceia.net/security/product.aspx?a=OPENGATE

3. Staff Entries

   a. Card readers should be provided at planned staff entrances. These should be coordinated with the parking design. Typically, there are 2-4, but locate these with the door hardware consultant, FCPS security, and FCPS Electronics. Locations to discuss include:

      i. Kitchen
      ii. Main Entry
      iii. Playground(s)
      iv. Staff entry separate from students in the AM.
      v. Any additional doors that may lead to playgrounds or outdoor spaces.

4. Reception & General Business Office (363 SF)

   a. Locate at the point of public arrival and entry into the building. Ensure visual and physical control of the main public approach and entry to the building. The front entry into the building shall have an electric lockset that provides ingress via a card reader and remote release located under the reception desk.

b. Divide the space into two distinct areas, one for public waiting and one for reception. The reception area shall have two or three workstations at a built-in receptionist desk that is a minimum of 10 feet in length. Provide a minimum of 8 linear feet of base and wall cabinets in the reception area. See diagram of the Typical Reception Area in Appendix G1 for the functional elements required. Provide for ADA accessibility on both sides of the reception desk.

c. Preferred finishes include rubber floor or luxury vinyl floor tile. Ceilings should be acoustical ceiling tile with a minimum ceiling height of 8'-8".

d. Provide a ~~monitor bracket (OFCI)~~ location and associated blocking in the wall in the waiting area for installation of an IFP ~~flat screen television set~~ (OFOI). Verify size with FCPS ~~Logistical Services~~Technology. Coordinate location with furniture and electrical data drops.

5. Attendance Office for Middle and High Schools (150 SF)

   a. Locate adjacent to reception area and entry. See Appendix G for sample sketch.

6. Principal's Office (200 SF)

   a. Locate near the Reception & General Business Office. Wherever possible, maximize visual supervision of the main public approach and entry into the building without sacrificing privacy.

   b. Preferred finishes include rubber floor or luxury vinyl tile and acoustical ceiling tile with a minimum ceiling height of 8'-8".

   c. Provide a ~~monitor bracket (OFCI)~~ location and associated blocking in the wall for installation of an IFP~~flat screen television set~~ (OFOI). Coordinate location with furniture and electrical/data drops.

   d. Provide one 4' x 4' tack board. Coordinate location with FCPS FD&C during construction.

   e. Coordinate electrical, communication requirements and provide space for the following (OFOI) furnishings:

      i. 66" x 30" desk with chair
      ii. 66" x 24" credenza with 42" x 24" bridge
      iii. (2) 4-drawer file cabinets
      iv. 2 guest chairs
      v. 36" dia. conference table with 2 guest chairs
      vi. 36" x 72" x 12" bookcase
      vii. Wall mounted ~~TV~~IFP (OFOI)

7. Professional Staff Assistant's (PSA) Office (150 SF)

   Locate with the administrative suite except where the building layout requires that the PSA's office be in a remote location for improved supervision of all areas of the school.

   a. Preferred finishes include rubber floor or luxury vinyl tile and acoustical ceiling tile with a minimum ceiling height of 8'-8".

   ~~b. Provide a monitor bracket (OFCI) and associated blocking in the wall for installation of a flat screen television set (OFOI).~~

   ~~c.~~b. Provide one 4' x 4' tack board. Coordinate location with FCPS FD&C during construction.

   ~~d.~~c. Coordinate electrical, communication requirements and provide space for the following (OFOI) furnishings:

      i. 66" x 30" desk with chair
      ii. 66" x 24" credenza with 42" x 24" bridge
      iii. (2) 4-drawer file cabinets
      iv. 2 guest chairs
      v. 36" dia. conference table with 2 guest chairs
      vi. 36" x 72" x 12" bookcase
      vii. Wall mounted IFP (OFOI)

8. First Aid (360-400 SF) – See diagram of the Proposed First Aid Area in Appendix I for the functional elements required. Provide for ADA accessibility. (Discuss with FCPS FD&C if a full Clinic is needed at the school in lieu of First Aid.)

    a. Locate within the administrative suite within direct view from the Reception / General Business office area.

    b. Preferred finishes include rubber floor or luxury vinyl tile and acoustical ceiling tile with a minimum ceiling height of 8'-8".

    c. Sick child area (80 SF)

        i. Provide space for two cots and two guest chairs (OFOI)
        ~~ii. 5 linear feet of base and wall cabinets with accessible sink and (OFOI) under-counter refrigerator (connect to emergency generator).~~
        ii. Lockable narcotics cabinet
        iii. 48" x 30" table with chair (OFOI)

    d. Private exam room (80 SF) (possibly 2)

        i. 5 linear feet of base and wall cabinets (with lockable narcotics cabinet) with accessible sink
        ii. Exam table (OFOI)
        iii. Soap dispenser (OFCI)
        iv. Paper dispenser (OFCI)

    e. Provide work area for nurse.

        i. 5 linear feet of base and wall cabinets with small refrigerator (OFOI) and accessible sink. Power should connect to ~~back-up~~ emergency generator because of medicines stored.

    f. Accessible toilet room

        i. Preferred finishes include porcelain floor tile and ceramic tile wainscot.
        ii. Soap dispenser (OFCI)
        iii. Paper towel dispenser (OFCI)
        iv. Toilet paper dispenser (OFCI)

9. Bookkeeper's Office (100 SF)

    a. Locate within the administrative suite.

    b. Preferred finishes include rubber floor or luxury vinyl tile and acoustical ceiling tile with a minimum ceiling height of 8'-8".

    c. Provide one 4' x 4' tack board. Coordinate location with FCPS FD&C during construction.

    d. Coordinate electrical, communication requirements and provide space for the following (OFOI) furnishings:

        i. 66" x 30" desk with chair
        ii. 66" x 24" credenza with 42" x 24" bridge
        iii. (2) 4-drawer file cabinets
        iv. 2 guest chairs
        v. 36" x 72" x 12" bookcase

10. Records Room (150 SF)

    a. Locate centrally between the administrative and guidance suites.

    b. Preferred finishes include rubber floor or luxury vinyl tile and acoustical ceiling tile with a minimum ceiling height of 8'-8".

    c. Provide two-hour fire barrier construction around the records room.

    ~~c.~~d. Provide and locate key box (CFCI).

~~d.~~e. Coordinate electrical, communication requirements and provide space for the following (OFOI) furnishings:

i. 4-drawer file cabinets. The number is dependent on school enrollment.

11. Staff Workroom (150 SF) (Multiple may be needed if the school building is very large. If so, locate them for easy staff access).
    a. Locate one (1) convenient to the main administrative suite near the Reception & General Business office.
    b. Preferred finishes include rubber floor or luxury vinyl tile and acoustical ceiling tile with a minimum ceiling height of 8'-8".
    c. Provide one 6' x 4' tack board.
    d. Provide a minimum of 10 linear feet of base and wall cabinets with an accessible sink.
    e. Allow space for a floor-mounted copier.
    f. Provide a minimum of 120 mail slots for staff use. See Appendix G for preferred casework configuration.
    g. Coordinate electrical, communication requirements and provide space for the following (OFOI) furnishings:
        i. 48" dia. table with 4 chairs
12. Staff Lounge (200 SF) – Can be combined with Staff Workroom
    a. Locate convenient to the administrative suite and the staff workroom.
    b. Preferred finishes include rubber floor or luxury vinyl tile and acoustical ceiling tile with a minimum ceiling height of 8'-8".
    c. Provide one 6' x 4' tack board.
    d. Provide a minimum of 10 linear feet of base and wall cabinets with an accessible sink.
    e. Coordinate electrical, plumbing, and communication requirements and provide space for the following (OFOI) furnishings:
        i. 48" dia. table with 4 chairs
        ii. Full-size refrigerator with built-in icemaker
        iii. Microwave oven
        iv. 2 vending machines (verify requirement with owner)
        v. Coffee pot
13. Staff Toilets (50 SF each)
    a. Provide a minimum of four private accessible staff toilet rooms at each school site. Locate two toilets within or adjacent to the administrative suite and the remainder disbursed throughout the school. Consider travel time for staff is limited throughout the entire day. More may be needed if it is a large school.
    b. Preferred finishes include porcelain floor tile, ceramic tile wainscot and acoustical ceiling tile with a minimum ceiling height of 8'-8".
    c. Coordinate location for the following (OFCI) items:
        i. Soap dispenser
        ii. Paper Towel Dispenser
        iii. Toilet paper dispenser

14. Bookstore (100 SF)
    a. Locate convenient to the administrative suite or near Media Center with student access from a main corridor “Dutch” type door.
    b. Preferred finishes include rubber or luxury vinyl tile and acoustical ceiling tile with a minimum ceiling height of 8’-8”.
    c. Coordinate electrical, communication requirements and provide space for the following (OFOI) furnishings:
        i. 48” x 30” desk and chair
        ii. 48” x 24” table for printer
        iii. (2) 4-drawer file cabinets
15. Guidance Reception Area (150 SF)
    a. Locate prominently near the records room while providing easy access by students and visitors from a public corridor without direct view from the Principal and PSA offices.
    b. Preferred finishes include rubber floor or luxury vinyl tile and acoustical ceiling tile with a minimum ceiling height of 8’-8”.
    c. Provide one 4’ x 4’ tack board.
    d. Coordinate electrical, communication requirements and provide space for the following (OFOI) furnishings:
        i. 36” dia. table with 4 chairs
        ii. 36” x 12” bookcase
16. Guidance Office (150 SF)
    a. Locate adjacent to and provide access from the guidance reception area while providing a secondary access to be used by the guidance counselor through the administrative suite.
    b. Preferred finishes include rubber floor or luxury vinyl tile and acoustical ceiling tile with a minimum ceiling height of 8’-8”.
    c. Provide one 4’ x 4’ tack board. Coordinate location with FCPS FD&C during construction.
    d. Coordinate electrical, communication requirements and provide space for the following (OFOI) furnishings:
        i. 66” x 30” desk with chair
        ii. 66” x 24” credenza with 42” x 24” bridge
        iii. (2) 4-drawer file cabinets
        iv. 36” x 12” bookcase
        v. 2 guest chairs
17. SBDM Council Office (150 SF)
    a. Locate within the administrative suite.
    b. Preferred finishes include rubber floor or luxury vinyl tile and acoustical ceiling tile with a minimum ceiling height of 8’-8”.
    c. Provide one 4’ x 4’ tack board. Coordinate location with FCPS FD&C during construction.
    d. Coordinate electrical, communication requirements and provide space for the following (OFOI) furnishings:
        i. 66” x 30” desk with chair
        ii. 66” x 24” credenza with 42” x 24” bridge
        iii. (2) 4-drawer file cabinets

iv. 36” x 12” bookcase
v. 48” dia. table with 3 chairs

18. SBDM Council Conference Room (270 SF)
    a. Locate within the administrative suite in a central location to allow use by SBDM council, administrative and faculty staff.
    b. Preferred finishes include rubber floor or luxury vinyl tile and acoustical ceiling tile with a minimum ceiling height of 8’-8”.
    c. Provide one 8’ x 4’ marker board for use with (OFOI) Interactive Flat Panel.
    d. Provide one 4’ x 4’ tack board
    e. Coordinate electrical, communication requirements and provide space for the following (OFOI) furnishings:
        i. 48” x 144” conference table and 10 - 12 chairs
        ii. 72” x 24” mobile credenza
    f. Provide ~~a monitor bracket/location and~~ associated blocking in wall in this conference room for an IFP ~~or television screen~~ (OFOI)
19. Mother’s Room (30-50 SF)
    a. Provide 5 linear feet of casework with sink and power for a small dorm-size refrigerator (OFOI) (connect to emergency generator).
    b. Provide power above casework for user.
    c. Provide area for soft seating (OFOI).
    d. Coordinate location for the following OFCI items.
        i. Soap dispensers
        ii. Paper towel dispenser
    e. Preferred finishes include rubber or luxury vinyl tile and acoustical ceiling with a minimum height of 8’-8”.
20. Security Resource Officers (SRO) Office (150 – 400 SF)
    a. Centrally located office for law enforcement with room on wall for multiple monitors to be displayed for constant camera viewing. Provide power/data connections for monitors.
    b. Preferred finishes include rubber or luxury vinyl tile and acoustical ceiling tile with a minimum ceiling height of 8’-8”.
    c. Provide space and coordinate electronic communication requirements for the following (OFOI) furnishings:
        i. 66” x 30” desk and chair
        ii. (2) 4-drawer file cabinets
        iii. 36” x 12” bookcase
        iv. (2) guest chairs
        v. Space for a lockable safe at approximately 30”h x 24”w x 24”d. This could also be a closet.
    d. Provide one 4’ x 4’ tack board and one 4’ x 4’ marker board. Coordinate location with FCPS FD&C during construction.
21. Student Support Services Offices (150 SF) – 1 per every 250 students
    a. Can be located near administration area or located in areas throughout the school for easy student access.

b. Preferred finishes include rubber or luxury vinyl tile and acoustical ceiling tile with a minimum ceiling height of 8'-8".

c. Provide one 4' x 4' tack board. Coordinate location with FCPS FD&C during construction.

d. Coordinate electrical, communication requirements and provide space for the following (OFOI) furnishings:

i. 66" x 30" desk with chair
ii. 66" x 24" credenza with 42" x 24" bridge
iii. (2) 4-drawer file cabinets
iv. 36" x 12" bookcase
v. 2 guest chairs

12.2 Middle and High School Administrative Offices (like above)

12.3 Elementary, Middle and High School Family Resource / Youth Services Centers (FRYSC) (500 SF)

A. This space is larger than KDE guidelines and the SF should be deducted from the SBDM allowance.

B. Locate outside the administrative suite (if possible) with access directly from the exterior of the building, convenient to visitor parking with consideration given to toilet facilities access during non-school hours. Students should also be able to access this easily during the school day, when needed. It should also be easily accessible for students.

C. Preferred finishes include rubber floor or luxury vinyl tile and acoustical ceiling tile with a minimum ceiling height of 8'-8".

D. Divide the space into three distinct areas, one for public waiting, one for the FRYSC Coordinator's office, and one accessible toilet.

1. Public waiting / work area (350 SF)

a. 5 linear feet of base and wall cabinets with accessible sink and two (2) full-size refrigerators (OFOI) with connections to the back-up generator.

b. 48" x 30" table with chair (OFOI)

c. 48" x 24" table for printer (OFOI)

d. (2) 4-drawer file cabinets (OFOI)

e. 48" dia. table with 3 chairs (OFOI)

f. (2) 36" x 72" x 18" storage cabinets (OFOI)

g. 4' x 4' marker board

h. Connections for washer and dryer (OFOI), unless a shared laundry facility is developed.

~~h.~~i. Connections for two (2) refrigerators with an ice maker.

2. Coordinator's office (100 SF)

a. 66" x 30" desk with chair (OFOI)

b. 66" x 24" credenza with 42" x 24" bridge (OFOI)

c. (2) 4-drawer file cabinets (OFOI)

d. (2) 36" x 72" x 12" bookcases (OFOI)

e. Two guest chairs (OFOI)

f. 4' x 4' tack board Coordinate location with FCPS FD&C during construction.

3. Accessible Toilet Room (50 SF)
    a. Provide small cabinet space on floor, or wall hung above toilet, for storage of feminine products and other similar items that may be needed.
    b. Preferred finishes include porcelain floor tile and ceramic tile wainscot.
    c. Soap dispenser (OFCI)
    d. Paper towel dispenser (OFCI)
    e. Toilet paper dispenser (OFCI)
4. KDE requirement is to have an exterior door for the public to use. Coordinate and discuss during the design review meetings with FCPS Safety & Security.

PART 13 KITCHEN / CAFETERIA

13.1 Kitchen

A. Kitchens are to be located immediately adjacent to the cafeteria. In addition, they shall be accessible for convenient delivery of food services / supplies via truck. The service / delivery door shall be self-locking and have a sight glass.

B. Provide either a full service or a satellite Kitchen at each school site as directed by FCPS Child Nutrition.

The minimum net floor area for Kitchens, including all features of self-contained storage, Manager's Office, Staff Toilet and Locker Room should be the minimum per KDE guidelines based on the number of students the school is designed for. If more SF is needed, then take additional square footage out of the "Allowance for SBDM Instructional Programs" as listed in the KDE programming document.

C. Preferred finishes include red quarry tile flooring with coved / sealed base and 24" x 24" vinyl-faced acoustical ceiling tile with a minimum ceiling height of 10'-0" in the main Kitchen areas and a minimum ceiling height of 8'-8" in support / ancillary spaces.

D. The Kitchen is to contain the following spaces / areas:

1. Manager's Office (80 SF) that provides a view window to supervise Kitchen activities and delivery door (Connect one of these outlets to the emergency generator, which should power the computer). Verify with FCPS Child Nutrition if more than one person will be in this room. Some larger schools have two managers.
    a. 48" x 30" table with chair (OFOI)
    b. 48" x 24" table for printer (OFOI)
    c. (1) 4-drawer file cabinets (OFOI)
    d. (1) 42" wall-mounted open shelf
    e. (1) Guest chair (OFOI)
    f. Data and power connections:
        a. (2) – Elementary
        b. (3) -- Middle
        c. (4) -- High
        d. One of each connection needs to be connected to the back-up generator system.
        e. Temperature monitoring system for walk-in freezers and coolers.
2. Staff Locker ~~Room~~ Area (40 SF) that contains a minimum of (8) 12" x 12" full-height lockers set on a concrete base. Verify number of employees with FCPS Child Nutrition in order to have an appropriate number of lockers. This area should be easily visible by others in the Kitchen.
    a. Provide (1) 4' x 4' tack board
3. Staff Toilet (50 SF)
    a. Consider providing two staff toilets if it is a middle or high school.
    ~~a.~~b. Preferred finishes include red quarry floor tile, ceramic tile wainscot and acoustical ceiling tile with a minimum ceiling height of 8'-8".
    ~~b.~~c. Coordinate location for the following ~~(OFCI)~~ items:
        i. Soap dispenser (OFOI)
        ii. Paper towel dispenser (OFCI)
        iii. Toilet paper dispenser (OFCI)

4. Dry Food Storage (0.5 – 1 SF per student population)
5. Non-Food Storage (80 SF) that contains space for a washer and dryer (OFOI, however utilities and venting need to be provided and coordinated). Provide a floor mop sink and space for shelving. Verify if chemicals will be stored here and provide room for proper storage and wall space as needed.
6. Food Preparation Area (Size varies)
7. Food Serving Area (Provide one serving line for each 300 students.) Provide (1) 4' x 4' marker board at each cashier station.
8. Dish Return / Washing Area (Size varies)
9. Walk-In Cooler / Freezer (Size varies) Power should connect to emergency generator.
    a. Preferred finishes include red quarry floor tile.

E. Coordinate Kitchen equipment layout with other members of the design team to ensure that equipment will work with sloped floors, drains, etc.

F. Door size from the dock for deliveries shall be a minimum of 48"w x 7'h.
1. Door shall have a minimum 10" x 10" window.
2. Door shall have a canopy providing coverage for deliveries.

G. Refer to KDE standards for additional requirements.

13.2 Cafeteria

A. Cafeterias are to be located immediately adjacent to the Kitchen and acoustically isolated from instructional spaces.

B. The minimum net floor area for Cafeterias should be based on the KDE guidelines.:

C. If SF listed above is higher than KDE Model Program, then take additional square footage out of the "Allowance for SBDM Instructional Programs" as listed in the KDE programming document.

D. Preferred finishes include rubber tile flooring or terrazzo and acoustical ceiling tile (or exposed structure with acoustical treatment) with a minimum ceiling height of 10'-0".

E. Good acoustics should be considered for a more comfortable design.

F. During design, *be aware that trash cannot be taken out through the kitchen from the cafeteria.*

G. If an outdoor eating area is proposed, then security must be considered as part of the design. Any outdoor area should be easily maintained by FCPS Grounds and Custodial Support staff.
1. Provide an exterior hose bib.
2. Make sure that announcements and alarms can be heard.

H. Provide a storage closet off the Cafeteria (250-300 SF). This is for any after-school program to utilize at the school.

PART 14 MAINTENANCE AND CUSTODIAL FACILITIES

14.1 Custodial Receiving

A. A Custodial Receiving Area (250-400 SF) is to be located at each school site with direct access from the service drive for delivery truck loading and unloading. The Custodial Receiving area should also have direct access to main public corridors to ease in distribution of supplies. Take additional square footage out of the "Allowance for SBDM Instructional Programs" as listed in the KDE programming document.

B. Preferred finishes include sealed concrete flooring and exposed structure.

C. Custodial Receiving shall have the following (OFOI) furnishings:

1. 48" x 30" table with chair
2. Provide connections for computer at table location.
3. (2) 4-drawer file cabinets
4. (2) Guest chairs
5. Bulk storage shelving
6. Staff lockers 12"x12" full height on concrete base. Number to be verified with FCPS Grounds and Custodial Support.
7. Include space and a connection/charging station for a floor scrubber. Verify the number of these required with the FCPS Grounds and Custodial Support in the design review meetings and the locations. See Appendix N for custodial scrubber cut sheet and to be confirmed with FCPS Grounds and Custodial Support.

D. Custodial Receiving areas shall have a mop sink, emergency eye wash, and emergency shower unit.

E. Provide (1) 4' x 4' tack board.

14.2 Custodial Closets

A. Custodial Closets (30 SF) should be located to conveniently serve all areas of the building. There should be a minimum of one custodial closet for every 20,000 SF of building floor area.

B. Custodial Closets shall have a mop sink with hot / cold water, and mop hanger. They should also allow space for (1) 36" x 72" x 18" shelving unit (OFOI).

C. ALL Custodial Closets, including Kitchen area, shall have a mop sink, emergency eye wash, and emergency shower unit.

14.3 Roof Access

A. Low slope roofs should be accessible from the interior by means of a permanent ship's ladder / stair and a secure roof hatch.

14.4 Maintenance Storage

A. Provide Maintenance Storage (150 SF) either as a part of the building structure or as a separate structure. If the Maintenance Storage is a part of the building structure, it is to have access only from the exterior of the building. Provide an exterior door that is a minimum of 42" in width.

B. Preferred finishes include sealed concrete flooring and exposed structure.

C. This structure stores yard equipment, gasoline, and other chemicals. Provide proper ratings if attached to the main structure.

14.5 Shared Washer / Dryer Room

A. A Shared Washer / Dryer Room (80 SF) is preferred to be as close as practical to the Preschool Classrooms, FMD Classroom and Family Resource / Youth Service Center if in an elementary school. Verify location with FCPS FD&C.

B. Preferred finishes include sealed concrete if it is shared amongst spaces and 24” x 24” vinyl coated acoustical ceiling tile with a minimum height of 8’-8”.

C. The washer and dryer units are OFOI, however utilities and direct exterior venting need to be provided and coordinated.

14.6 General Storage

A. Provide General Storage (250 SF Total) areas that are convenient to the main functional areas of the building.

B. Preferred finishes include sealed concrete flooring and exposed structure.

PART 15 TOILET & PLUMBING FIXTURES

15.1 General

A. Individual / single person toilet rooms should be discussed as an alternative to the traditional designs discussed below.

B. At least one accessible toilet for each gender should be provided to the staff and public beyond those listed in these guidelines. Multiple unisex restrooms are an acceptable alternative to providing separate facilities.

C. It is recommended that ganged public restrooms have ‘airport’ style entries (no doors). If used, it is preferable that the lavatories be located in a common space at the entry for increased supervision by staff. Fixtures and mirrors should be arranged to provide visual privacy.

D. Refer to the BCR – Division 22 for additional plumbing fixture requirements.

15.2 Drinking Fountains

A. Drinking fountains (not coolers) should be provided in high traffic areas such as public corridors, gymnasiums, cafeteria, and auditorium.

B. Bottle filling stations should be part of this design per building code requirements.

15.3 Ice Machine Room

A. Staff are not allowed to use the Kitchen ice machine and will not have access afterhours.

B. Discuss location of room with FCPS FD&C.

C. May not be needed if a concession stand is provided.

PART 16 CIRCULATION

16.1 Corridors

A. Efficiently configure corridors to maximize visual supervision of students and visitors. Avoid unnecessary recesses and alcoves. Classrooms may be entered from an alcove off of a main corridor provided that the alcove is no larger than 8’ wide by 6’ deep.

B. In Elementary Schools, main corridors shall be a minimum of 8’ clear width. In Middle and High Schools, main corridors shall be a minimum of 9’ clear width. Where lockers occur in corridors, the clear width is to be measured from the outside face of the lockers.

1. Extra width for the corridors should be considered and if so done, take out of the “Allowance for SBDM Instructional Programs” as listed in the KDE programming document.

C. Secondary corridors shall be a minimum of 6’ clear width.

D. Provide (1) 6’ x 4’ tack board adjacent to instructional spaces. The tack board is to be located a minimum of 36” from the edge of the door opening. No tack strips are to be provided in corridors.

E. Preferred finishes include thin-set terrazzo (with coved base) or luxury vinyl tile flooring and acoustical ceiling tile with a minimum height of 8’-8”.

F. Classroom doors should **not** be designed with a sidelight due to current safety concerns as they will likely get covered with a frosted film.

16.2 Bus Drop Off Entrance

A. This entrance should be designed wide enough to include multiple metal detectors and tables (72”l x 18”w x 29-1/2h). (Number can be verified with FCPS Risk Management & Safety during design.)

B. Power will be needed for this equipment.

C. Storage shall be provided adjacent to this entrance for these pieces of equipment when they are not in use.

D. Include exterior canopy design for drop off area. Size should be reviewed and discussed with FCPS FD&C.

E. See: https://www.ceia.net/security/product.aspx?a=OPENGATE

16.3 Ramps

A. Ramps shall be finished with rubber tile flooring for improved slip resistance.

16.4 Stairways

A. Stairways shall be a minimum of 4’ in width. (Building codes should drive stairway widths and railings.)

B. Preferred finishes include rubber stair treads / risers.

16.5 Display Cases

A. Enclosed and lighted display cases should be provided in a common area at each school. Provide a maximum of 12 linear feet of display case in Elementary Schools, 16 linear feet in Middle Schools and 20 linear feet in High Schools.

B. Include a display area near the Art Classroom. It can be included with the Art Room or in the corridor near it.

PART 17 APPENDICES

Appendix A	Interior Elevation / Partial Plan @ Elementary School Art Room
Appendix B	Interior Elevation / Partial Plan @ Elementary School Nature Studies Room
Appendix C	Interior Elevation / Partial Plan @ Elementary School Music Room
Appendix D	Kiln Room Partial Plan / Elevation
Appendix E1	Example Layouts of Resource Rooms
Appendix E2	Typical Elementary Interior Elevation @ Teacher Wardrobe & Cubbies
Appendix F1	Interior Elevation @ Teaching Wall – Cart Mounted IFP
Appendix F2	Interior Elevation @ Teaching Wall – Wall Mounted IFP
Appendix G	Typical Reception Area
Appendix G1	Typical Reception Area -- Elementary
Appendix H	Typical Reception Desk Elevations
Appendix I	Proposed First Aid Area
Appendix J	Exterior School Marquee
Appendix K	Reading Recovery Observation Window
Appendix L	FMD Room Changing Table
Appendix M	Dental Van Information
Appendix N	Custodial Scrubber Cut Sheet

APPENDIX A

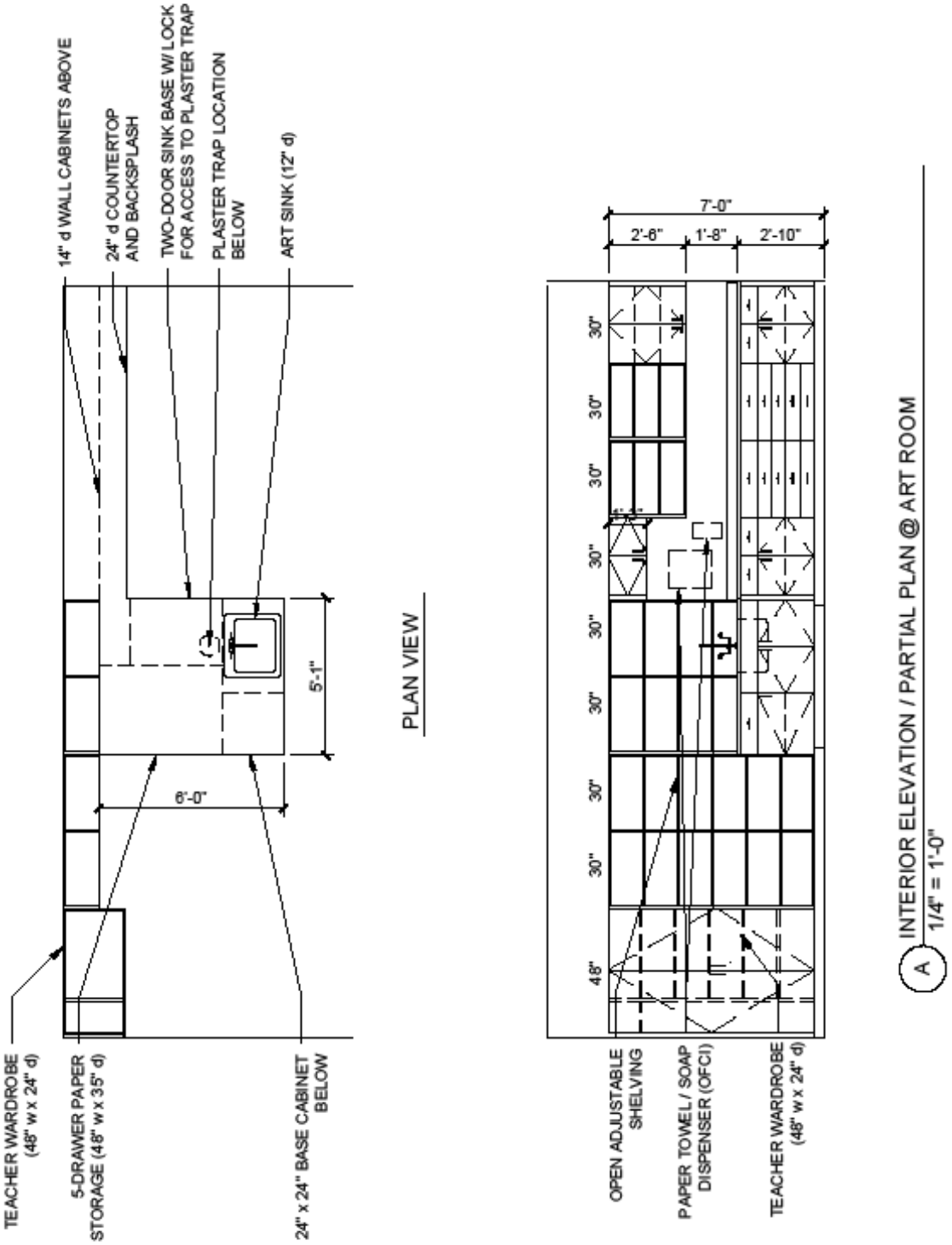
14" d WALL CABINETS ABOVE
24" d COUNTERTOP AND BACKSPLASH
TWO-DOOR SINK BASE W/ LOCK FOR ACCESS TO PLASTER TRAP
PLASTER TRAP LOCATION BELOW
ART SINK (12" d)
5'-1"
6'-0"
TEACHER WARDROBE (48" w x 24" d)
5-DRAWER PAPER STORAGE (48" w x 35" d)
24" x 24" BASE CABINET BELOW
PLAN VIEW
7'-0"
2'-6"
1'-8"
2'-10"
30"
30"
30"
30"
30"
30"
48"
OPEN ADJUSTABLE SHELVING
PAPER TOWEL/ SOAP DISPENSER (OFCI)
TEACHER WARDROBE (48" w x 24" d)
A
INTERIOR ELEVATION / PARTIAL PLAN @ ART ROOM
1/4" = 1'-0"

APPENDIX B

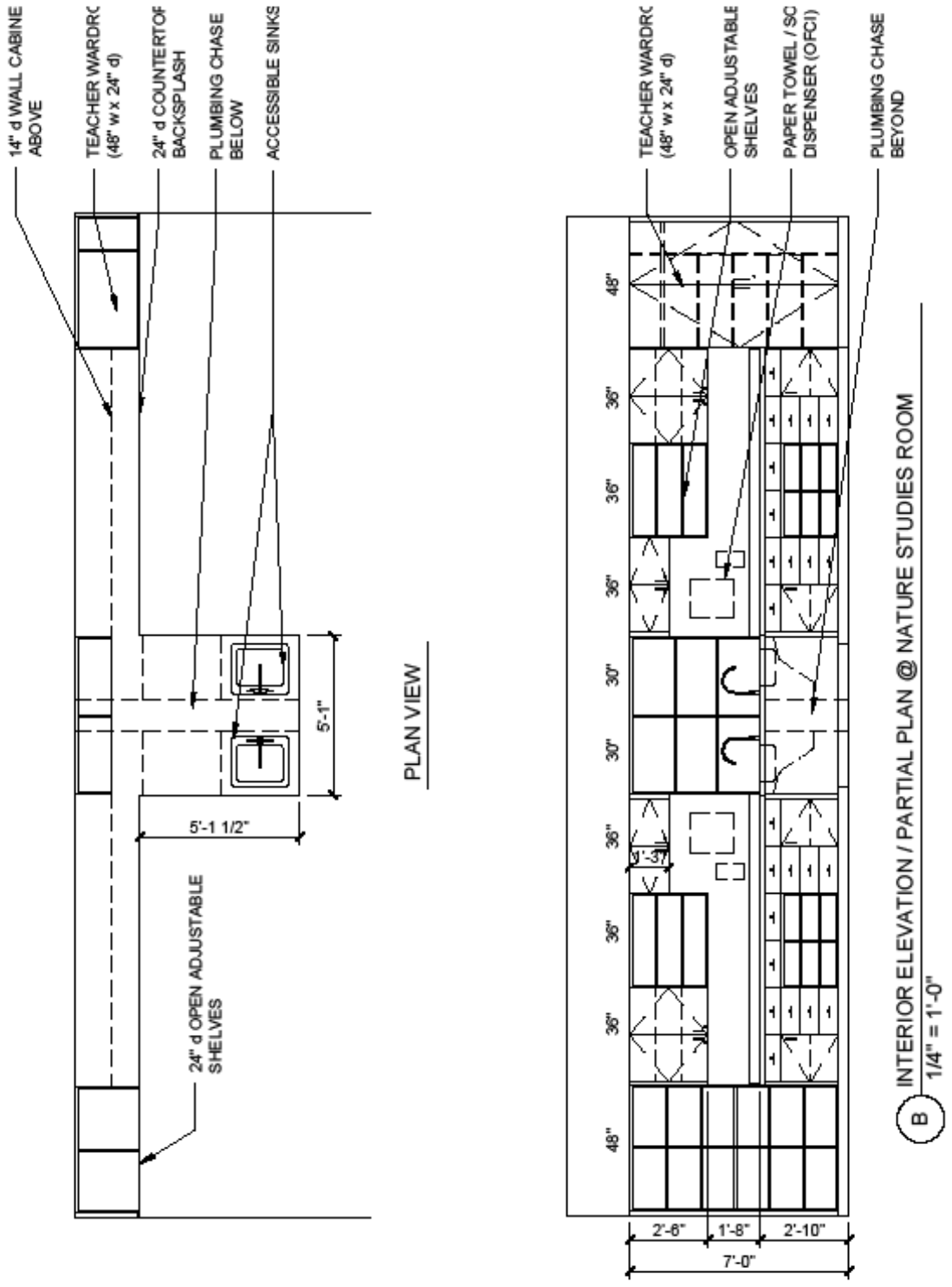

B INTERIOR ELEVATION / PARTIAL PLAN @ NATURE STUDIES ROOM
1/4" = 1'-0"

APPENDIX C

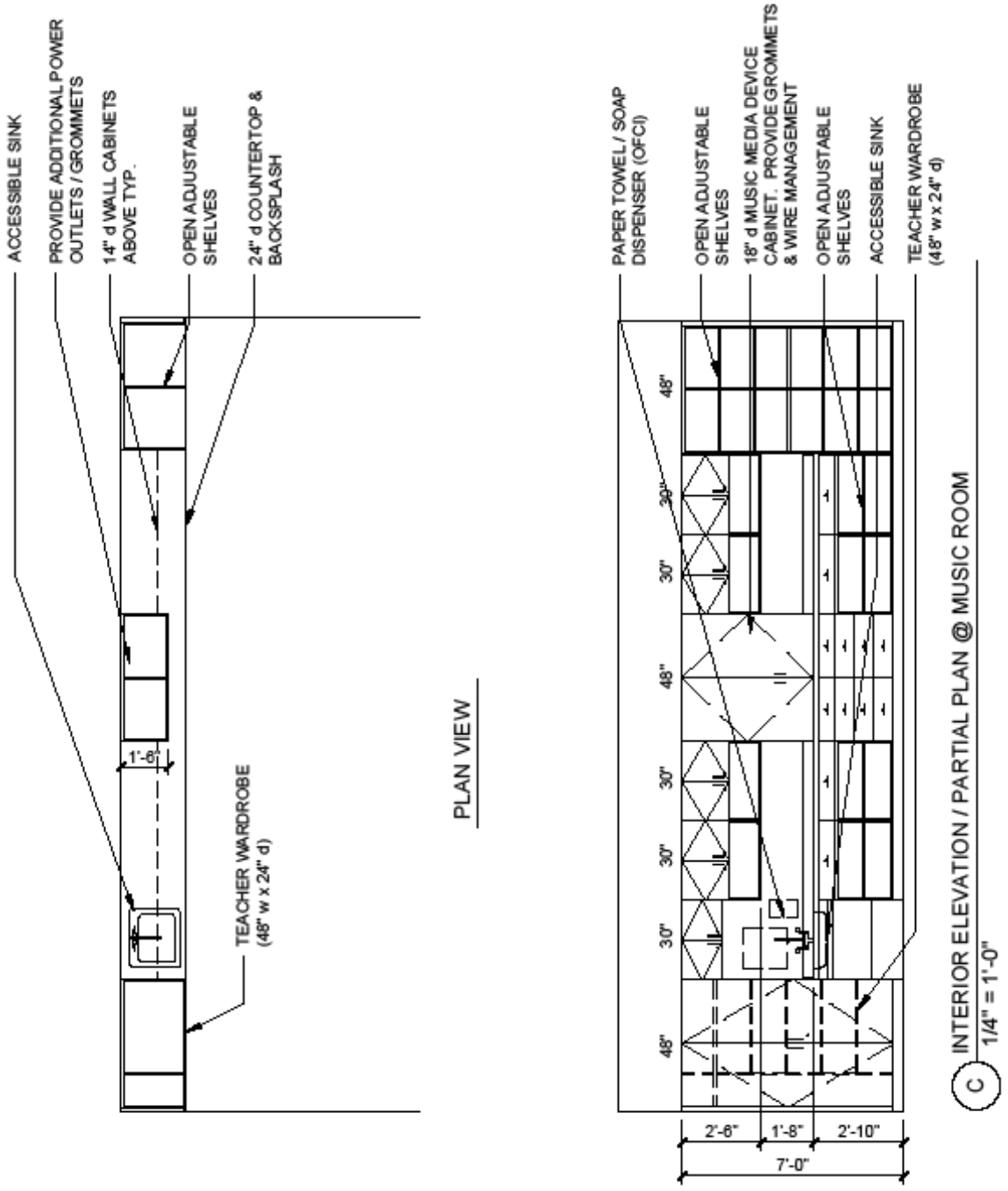
ACCESSIBLE SINK
PROVIDE ADDITIONAL POWER OUTLETS / GROMMETS
14" d WALL CABINETS ABOVE TYP.
OPEN ADJUSTABLE SHELVES
24" d COUNTERTOP & BACKSPLASH
1'-6"
TEACHER WARDROBE (48" w x 24" d)
PLAN VIEW
PAPER TOWEL/ SOAP DISPENSER (OFCI)
OPEN ADJUSTABLE SHELVES
18" d MUSIC MEDIA DEVICE CABINET. PROVIDE GROMMETS & WIRE MANAGEMENT
OPEN ADJUSTABLE SHELVES
ACCESSIBLE SINK
TEACHER WARDROBE (48" w x 24" d)
48"
30"
30"
48"
30"
30"
30"
48"
2'-6"
1'-8"
2'-10"
7'-0"
C
INTERIOR ELEVATION / PARTIAL PLAN @ MUSIC ROOM
1/4" = 1'-0"

APPENDIX D

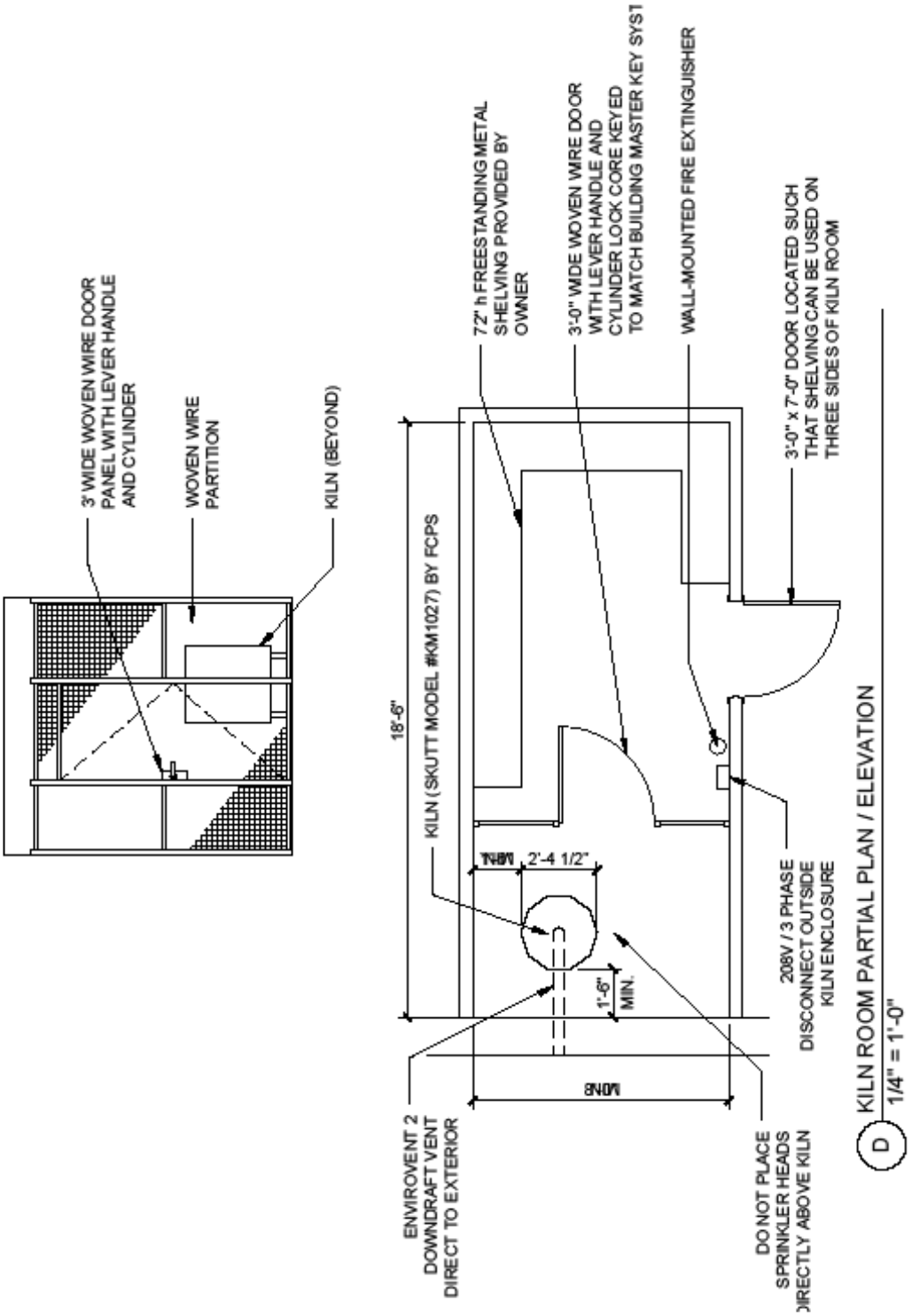
3' WIDE WOVEN WIRE DOOR PANEL WITH LEVER HANDLE AND CYLINDER
WOVEN WIRE PARTITION
KILN (BEYOND)
72" h FREESTANDING METAL SHELVING PROVIDED BY OWNER
3'-0" WIDE WOVEN WIRE DOOR WITH LEVER HANDLE AND CYLINDER LOCK CORE KEYED TO MATCH BUILDING MASTER KEY SYST
WALL-MOUNTED FIRE EXTINGUISHER
3'-0" x 7'-0" DOOR LOCATED SUCH THAT SHELVING CAN BE USED ON THREE SIDES OF KILN ROOM
18'-6"
KILN (SKUTT MODEL #KM1027) BY FCPS
2'-4 1/2"
1'-6" MIN.
208V / 3 PHASE DISCONNECT OUTSIDE KILN ENCLOSURE
ENVIROVENT 2 DOWNDRAFT VENT DIRECT TO EXTERIOR
DO NOT PLACE SPRINKLER HEADS DIRECTLY ABOVE KILN
D KILN ROOM PARTIAL PLAN / ELEVATION
1/4" = 1'-0"

APPENDIX E1

(Page 1 of 3)

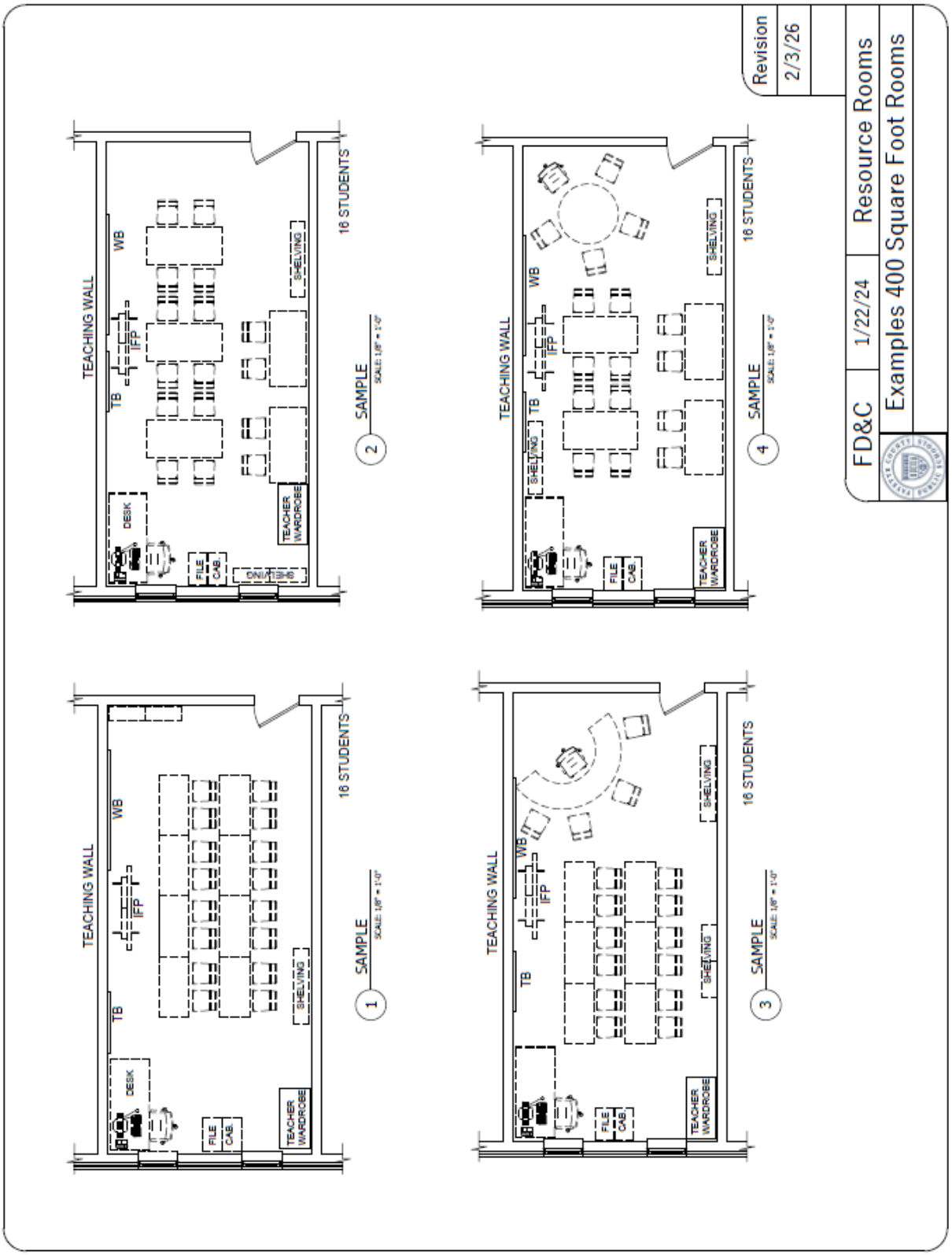

APPENDIX E1

(Page 2 of 3)

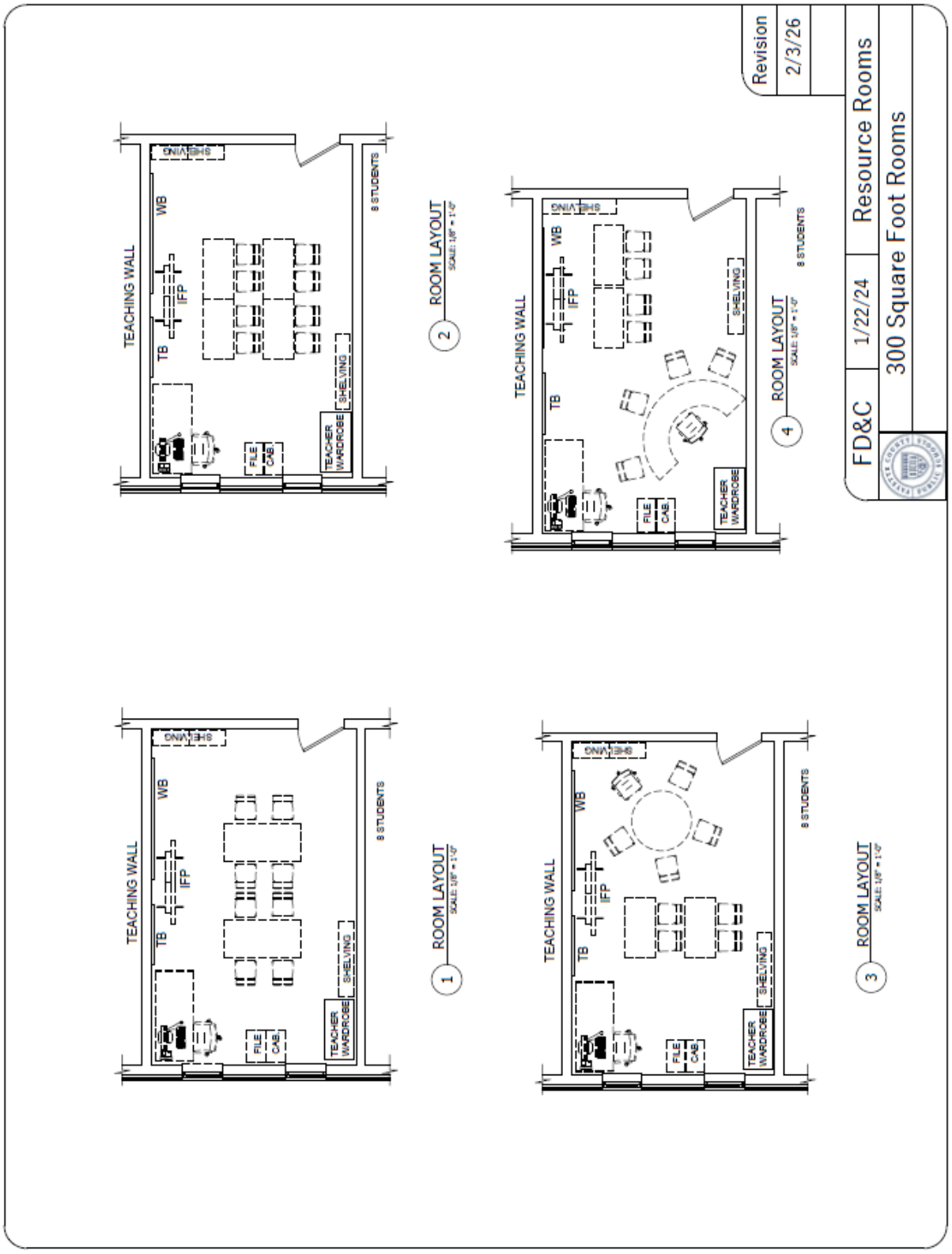

APPENDIX E1

(Page 3 of 3)

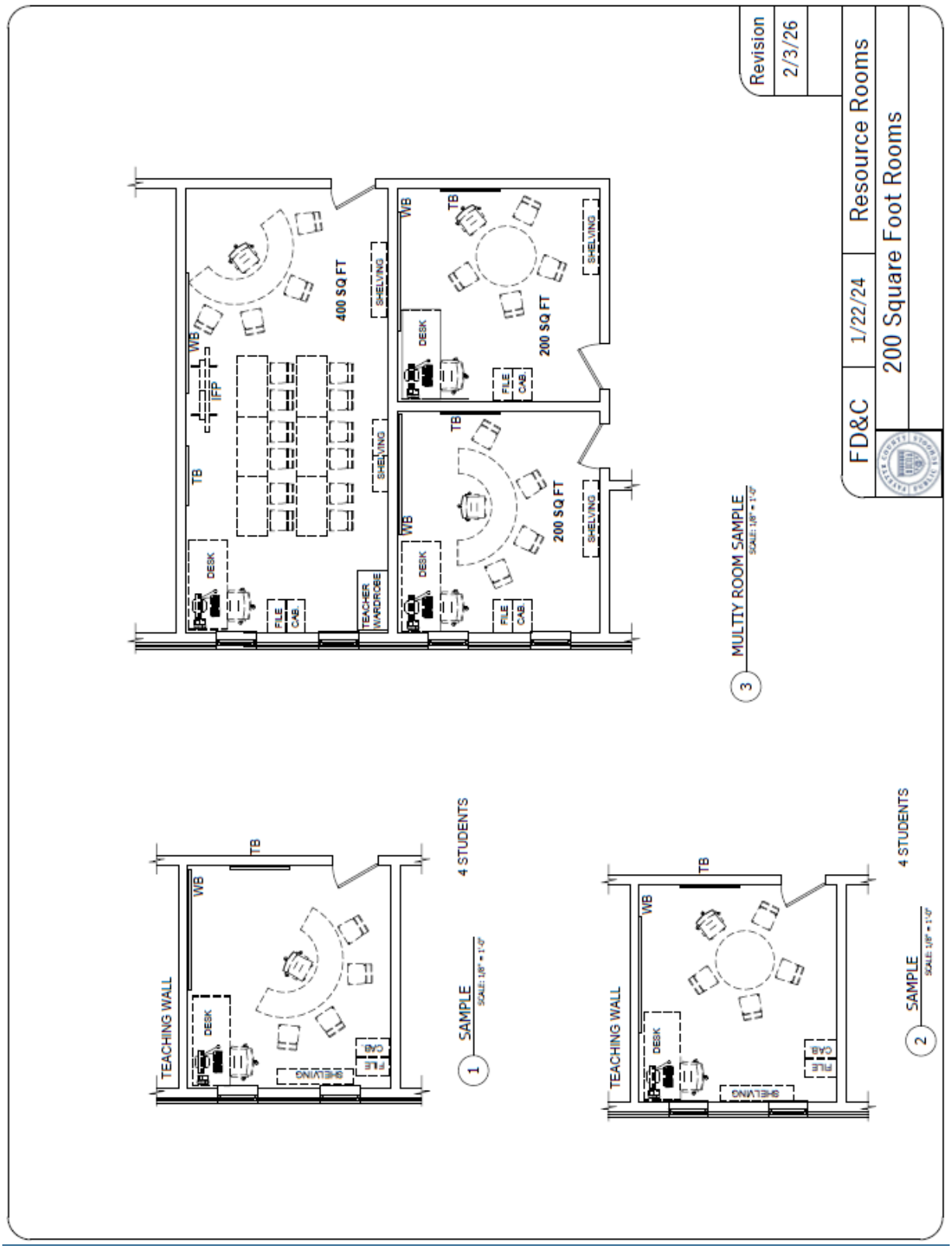

APPENDIX E2

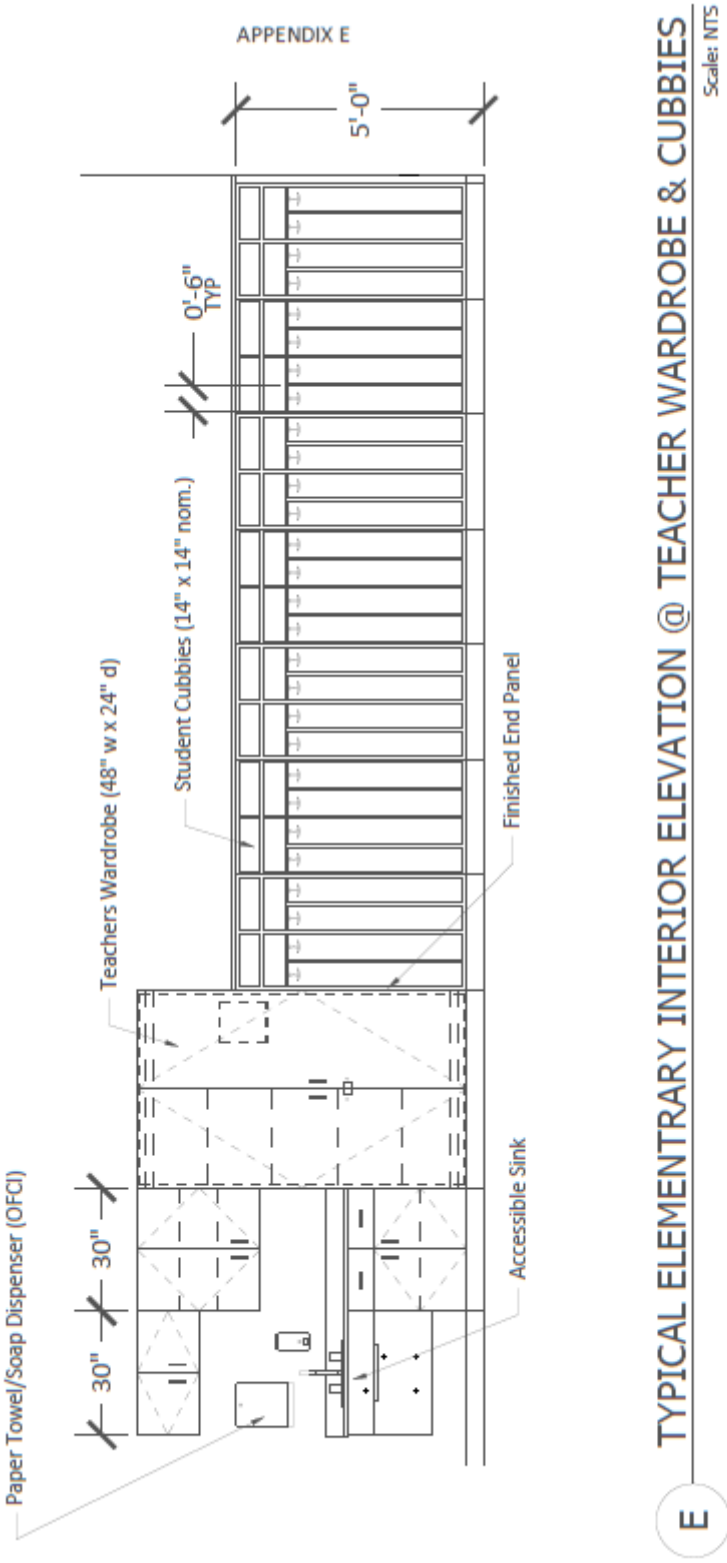
APPENDIX E
5'-0"
0'-6" TYP
Student Cubbies (14" x 14" nom.)
Teachers Wardrobe (48" w x 24" d)
Finished End Panel
Accessible Sink
30"
30"
Paper Towel/Soap Dispenser (OFCI)
TYPICAL ELEMENTRARY INTERIOR ELEVATION @ TEACHER WARDROBE & CUBBIES
Scale: NTS
E

APPENDIX F1

COORDINATE WITH FCPS TECHNOLOGY DEPARTMENT

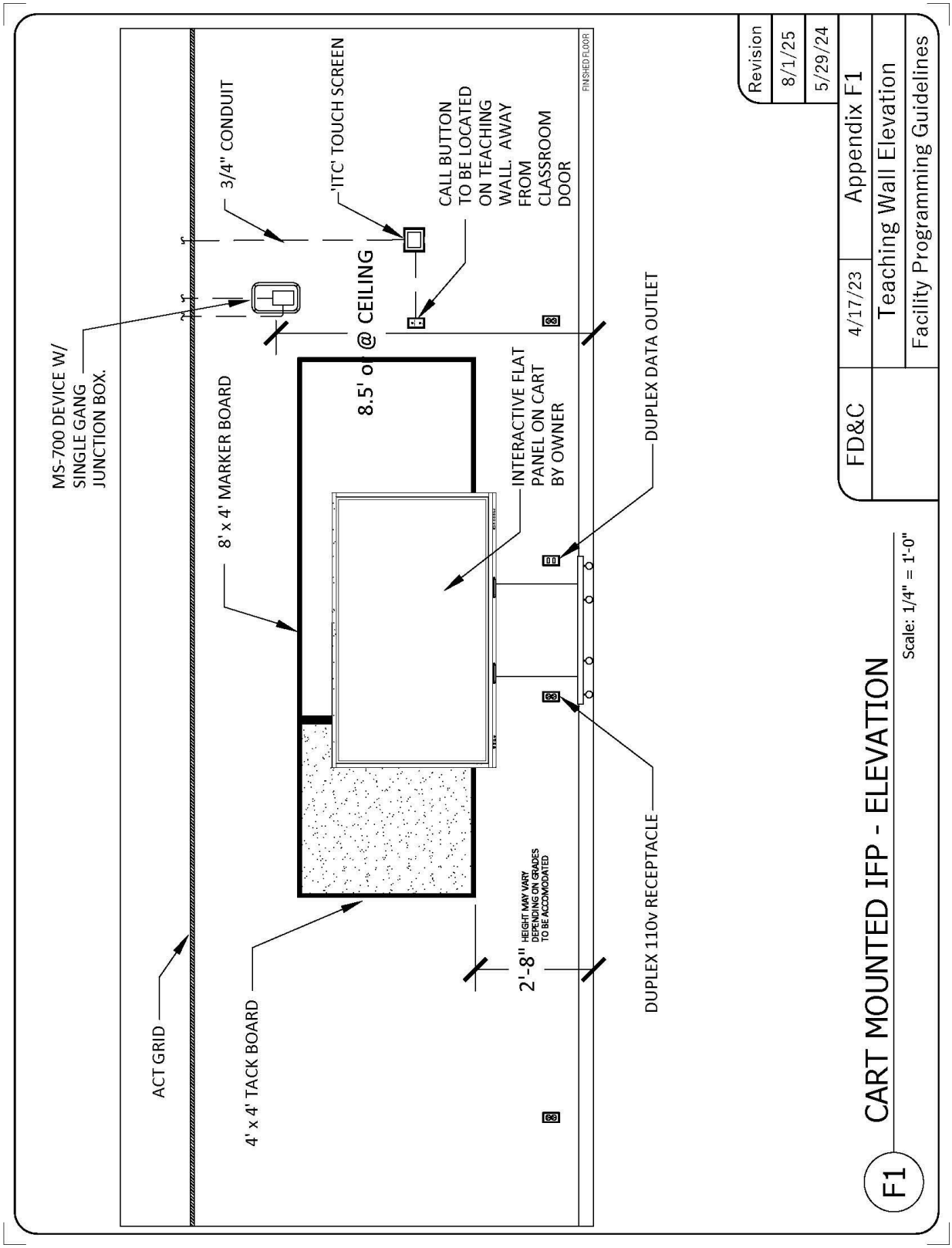

APPENDIX F2

COORDINATE WITH FCPS TECHNOLOGY DEPARTMENT

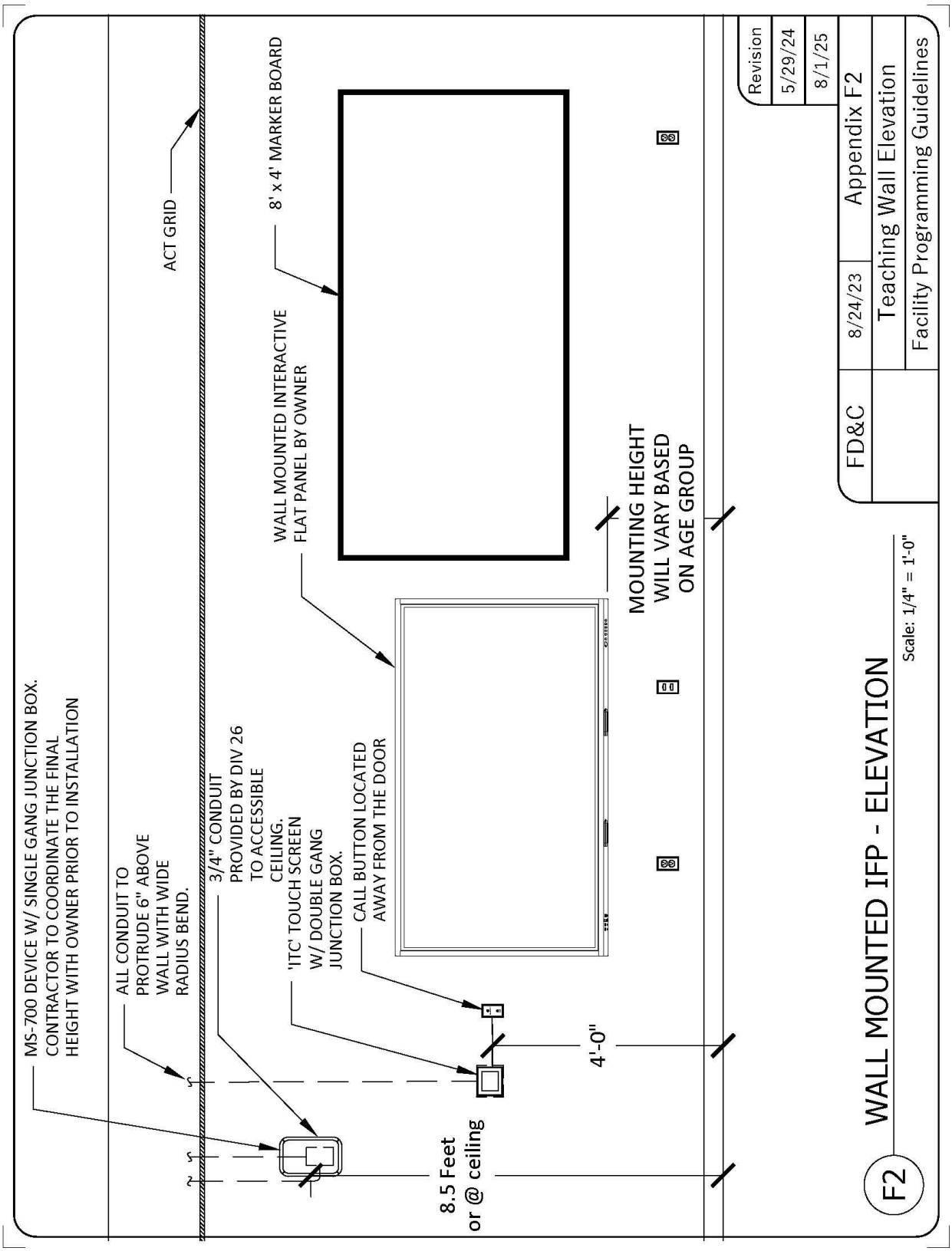

APPENDIX G -- Typical Reception Area

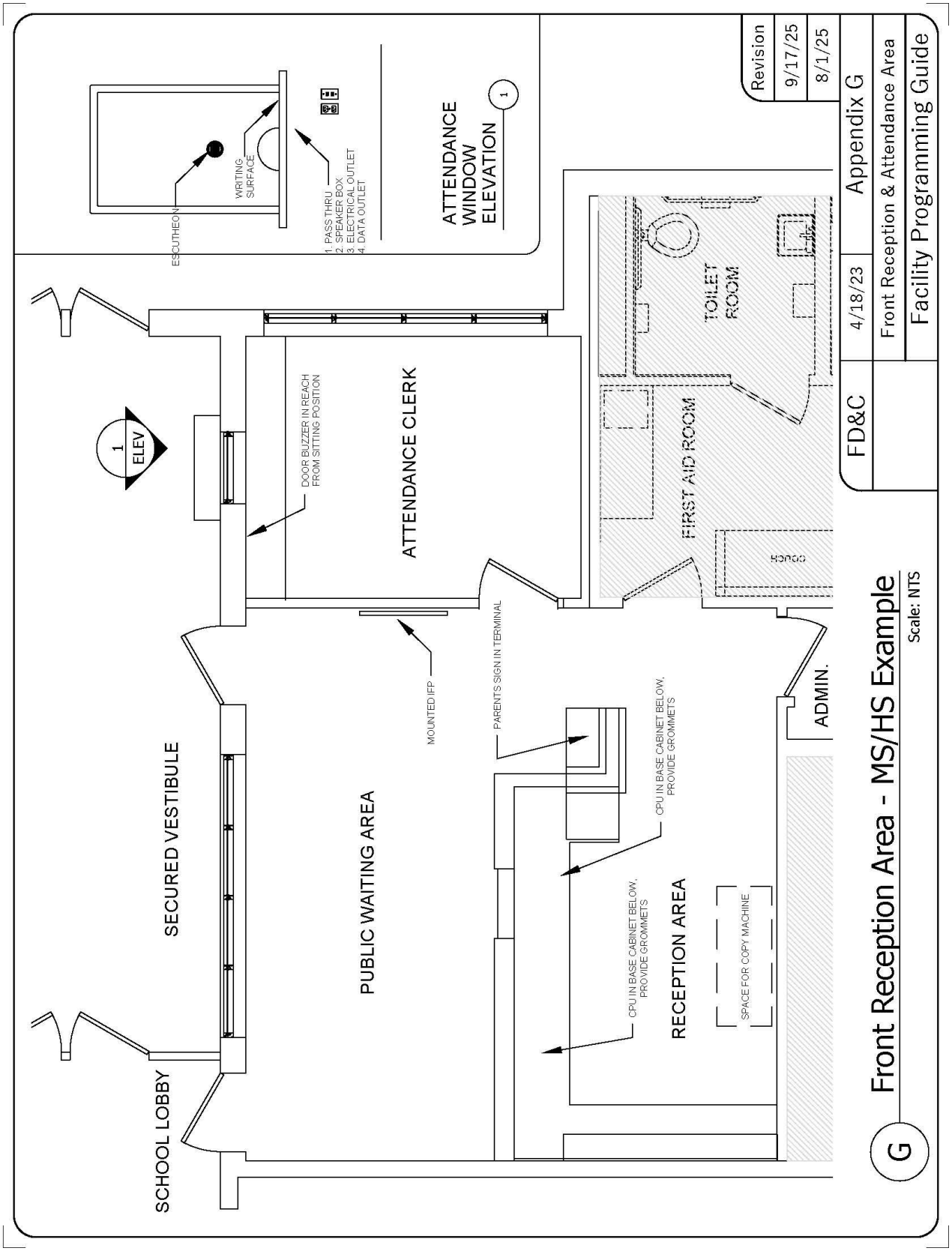

APPENDIX G1 -- Typical Reception Area -- Elementary

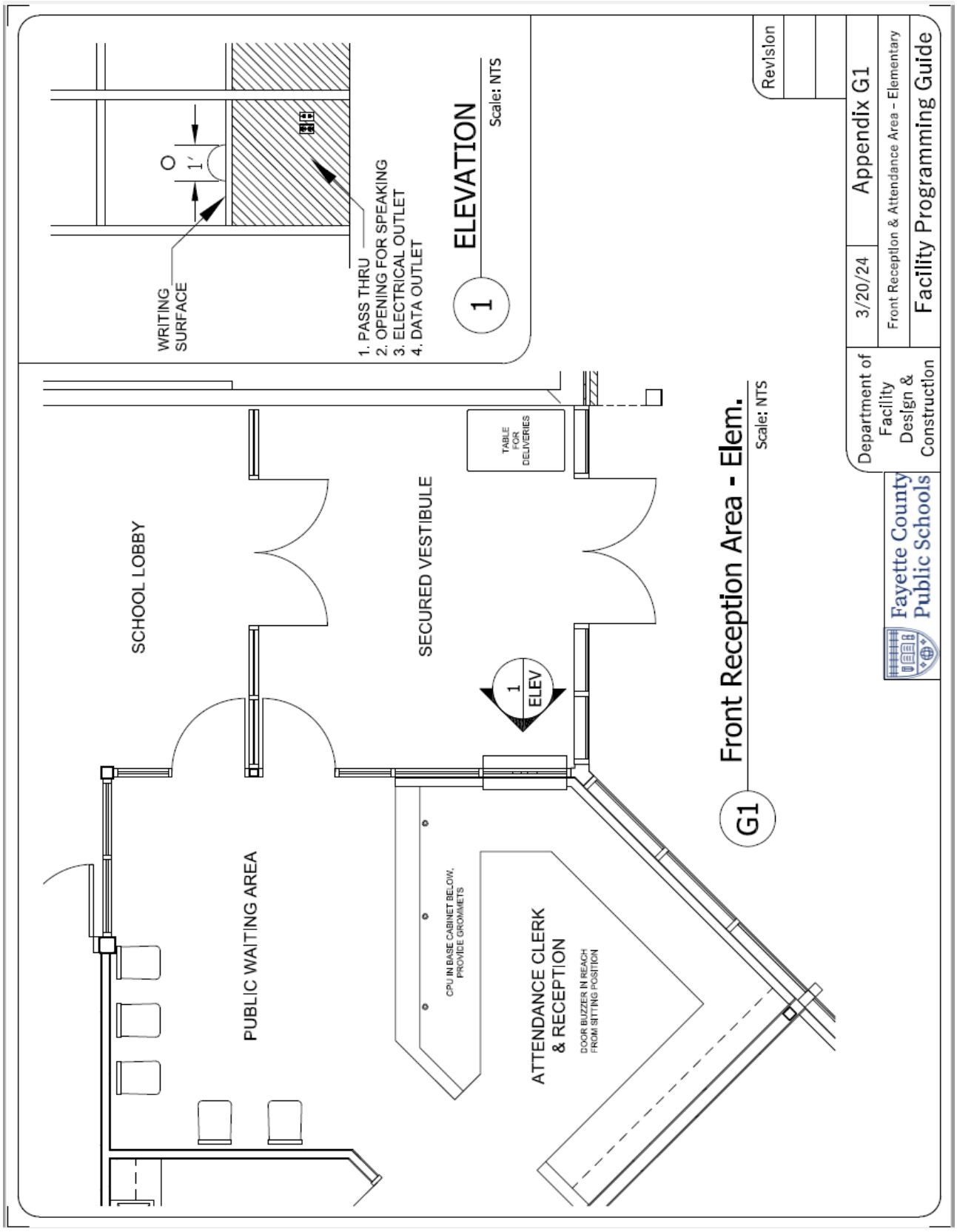

APPENDIX H

RECEPTION DESK PLAN AND ELEVATION NOTES	
1	Reception desk plan and elevation drawings indicate the components, quantities and clearance requirements. Actual layout and design shall suit the available space configuration.
2	All exposed casework (including toe kick) and countertop surfaces shall be covered in plastic laminate. Edges shall be 3 mm pvc.
3	All cabinet doors and drawers to have locks.
4	Provide power and data outlets in CPU cabinets with grommets in countertop above for cable management at each work station.
5	Provide vinyl base to match base in room.

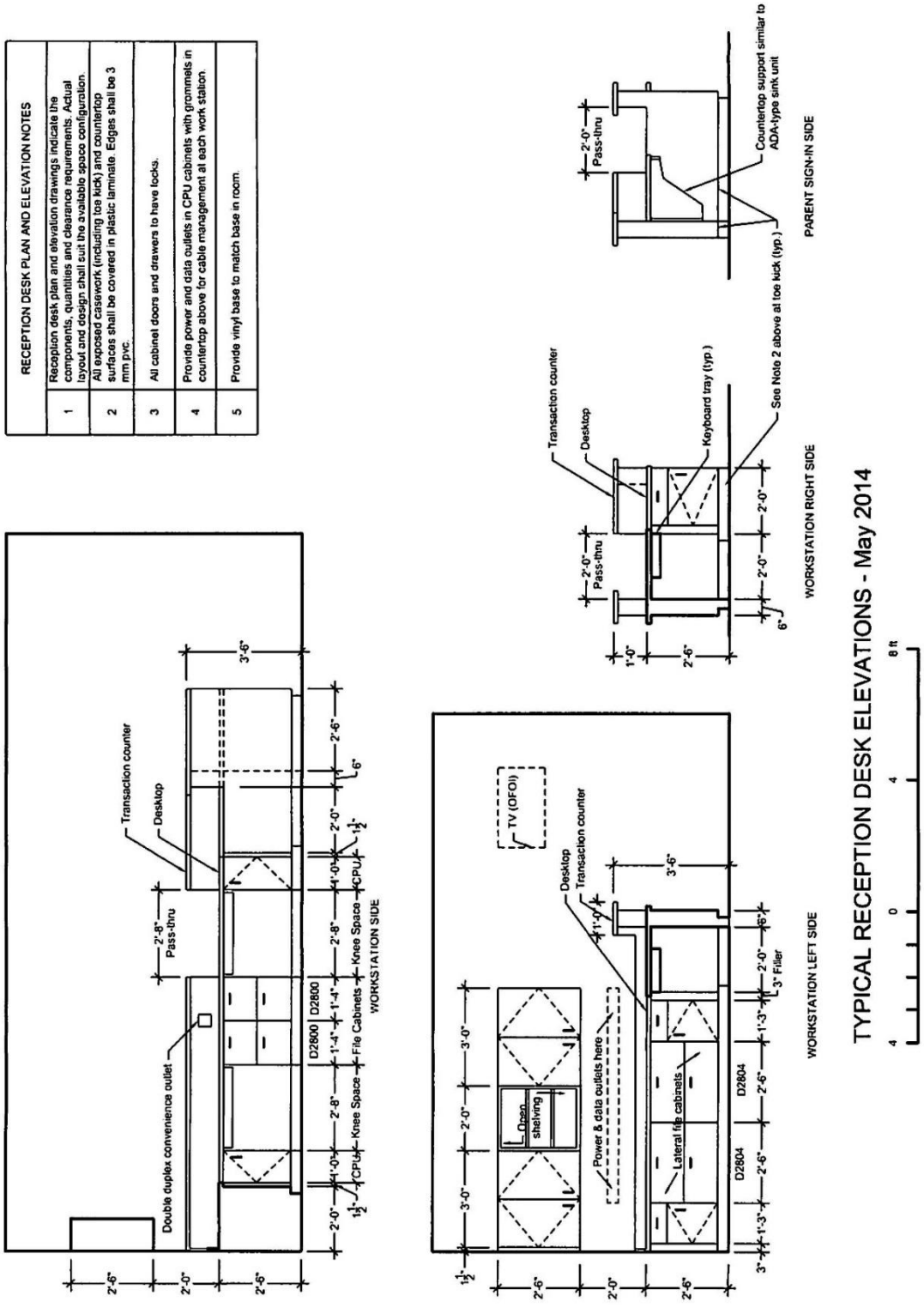

TYPICAL RECEPTION DESK ELEVATIONS - May 2014

APPENDIX I

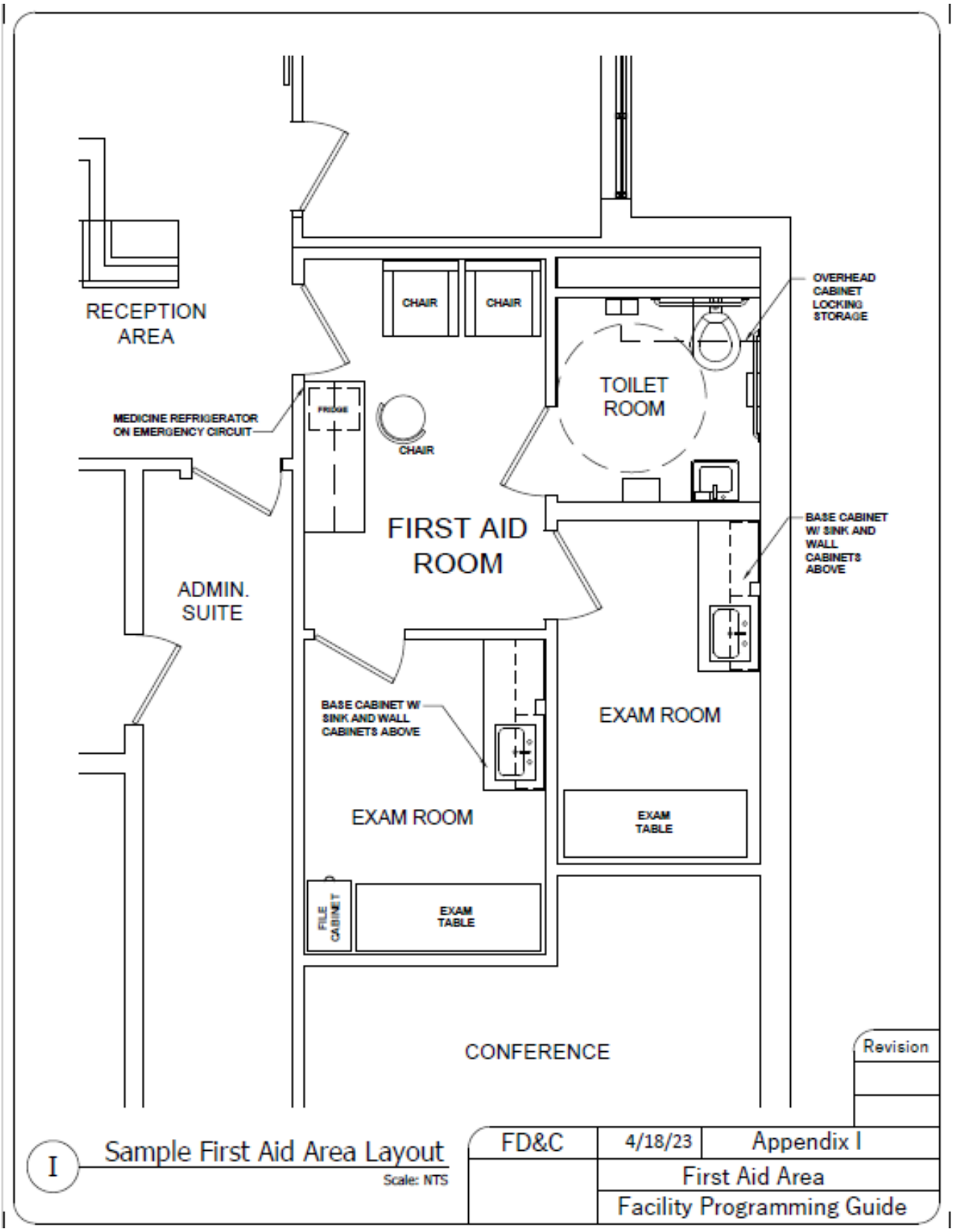
RECEPTION AREA
CHAIR
CHAIR
OVERHEAD CABINET LOCKING STORAGE
TOILET ROOM
MEDICINE REFRIGERATOR ON EMERGENCY CIRCUIT
FRIDGE
CHAIR
FIRST AID ROOM
BASE CABINET W/ SINK AND WALL CABINETS ABOVE
ADMIN. SUITE
BASE CABINET W/ SINK AND WALL CABINETS ABOVE
EXAM ROOM
EXAM ROOM
EXAM TABLE
FILE CABINET
EXAM TABLE
CONFERENCE
Revision
I
Sample First Aid Area Layout
Scale: NTS
FD&C
4/18/23
Appendix I
First Aid Area
Facility Programming Guide

APPENDIX J

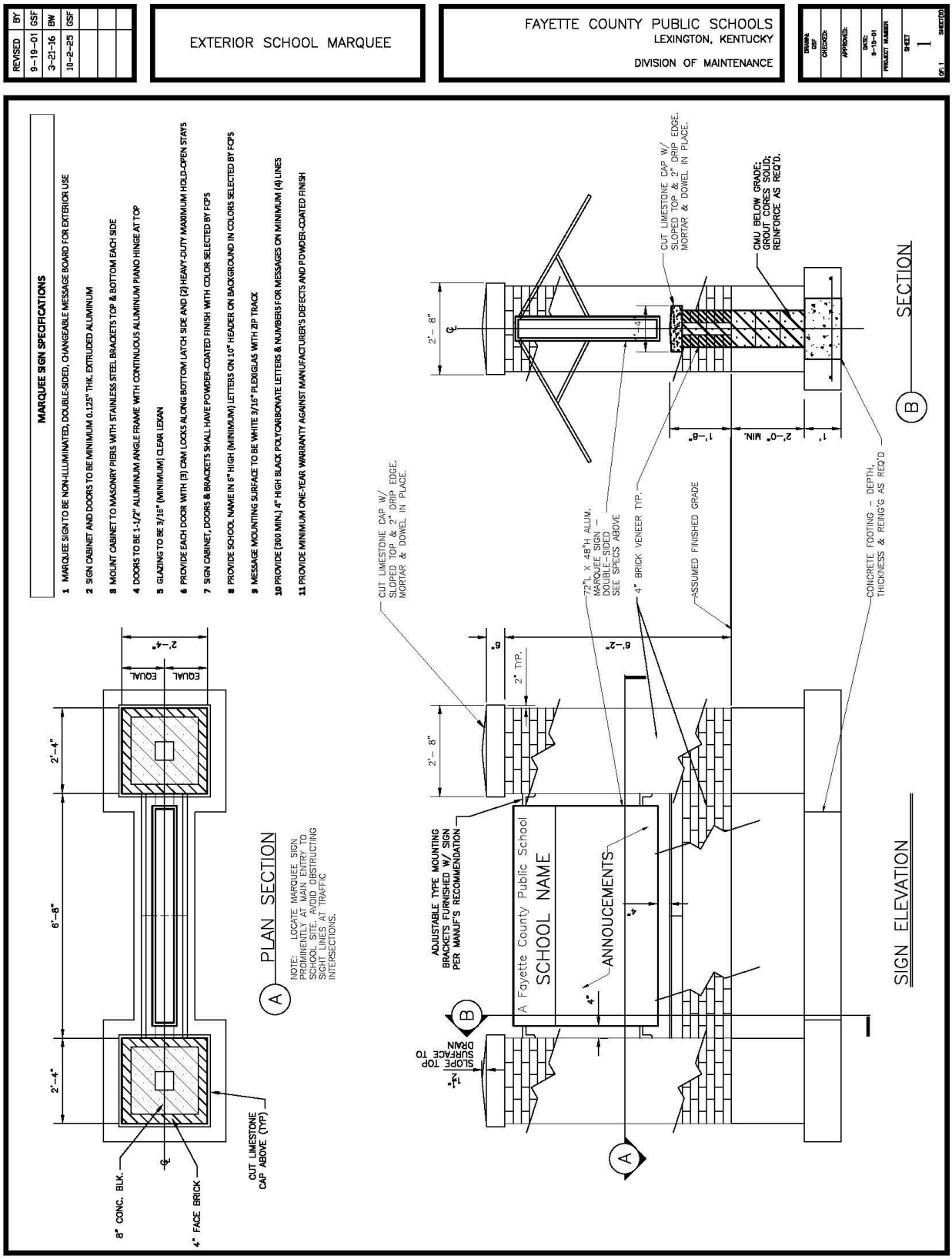

REVISED
BY
9-19-01
GSF
3-21-16
BW
10-2-25
GSF
EXTERIOR SCHOOL MARQUEE
FAYETTE COUNTY PUBLIC SCHOOLS
LEXINGTON, KENTUCKY
DIVISION OF MAINTENANCE
DRAWN: GSF
CHECKED:
APPROVED:
DATE: 6-15-01
PROJECT NUMBER
SHEET 1
OF: 1
SHEET(S)
MARQUEE SIGN SPECIFICATIONS
1 MARQUEE SIGN TO BE NON-ILLUMINATED, DOUBLE-SIDED, CHANGEABLE MESSAGE BOARD FOR EXTERIOR USE
2 SIGN CABINET AND DOORS TO BE MINIMUM 0.125" THK. EXTRUDED ALUMINUM
3 MOUNT CABINET TO MASONRY PIERS WITH STAINLESS STEEL BRACKETS TOP & BOTTOM EACH SIDE
4 DOORS TO BE 1-1/2" ALUMINUM ANGLE FRAME WITH CONTINUOUS ALUMINUM PIANO HINGE AT TOP
5 GLAZING TO BE 3/16" (MINIMUM) CLEAR LEXAN
6 PROVIDE EACH DOOR WITH (3) CAM LOCKS ALONG BOTTOM LATCH SIDE AND (2) HEAVY-DUTY MAXIMUM HOLD-OPEN STAYS
7 SIGN CABINET, DOORS & BRACKETS SHALL HAVE POWDER-COATED FINISH WITH COLOR SELECTED BY FCPS
8 PROVIDE SCHOOL NAME IN 6" HIGH (MINIMUM) LETTERS ON 10" HEADER ON BACKGROUND IN COLORS SELECTED BY FCPS
9 MESSAGE MOUNTING SURFACE TO BE WHITE 3/16" PLEXIGLAS WITH ZIP TRACK
10 PROVIDE (300 MIN.) 4" HIGH BLACK POLYCARBONATE LETTERS & NUMBERS FOR MESSAGES ON MINIMUM (4) LINES
11 PROVIDE MINIMUM ONE-YEAR WARRANTY AGAINST MANUFACTURER'S DEFECTS AND POWDER-COATED FINISH
2'-4"
6'-8"
2'-4"
EQUAL
EQUAL
8" CONC. BLK.
4" FACE BRICK
CUT LIMESTONE CAP ABOVE (TYP)
A
PLAN SECTION
NOTE: LOCATE MARQUEE SIGN PROMINENTLY AT MAIN ENTRY TO SCHOOL SITE. AVOID OBSTRUCTING SIGHT LINES AT TRAFFIC INTERSECTIONS.
CUT LIMESTONE CAP W/ SLOPED TOP & 2" DRIP EDGE. MORTAR & DOWEL IN PLACE.
72"L X 48"H ALUM. MARQUEE SIGN - DOUBLE-SIDED SEE SPECS ABOVE
4" BRICK VENEER TYP.
ASSUMED FINISHED GRADE
CONCRETE FOOTING - DEPTH, THICKNESS & REING'G AS REQ'D
6"
6'-2"
2" TYP.
2'- 8"
ADJUSTABLE TYPE MOUNTING BRACKETS FURNISHED W/ SIGN PER MANUF'S RECOMMENDATION
A Fayette County Public School
SCHOOL NAME
ANNOUCEMENTS
4"
SLOPE TOP SURFACE TO DRAIN
B
A
SIGN ELEVATION
CUT LIMESTONE CAP W/ SLOPED TOP & 2" DRIP EDGE. MORTAR & DOWEL IN PLACE.
CMU BELOW GRADE; GROUT CORES SOLID; REINFORCE AS REQ'D.
2'- 8"
1'-8"
2'-0" MIN.
1'
B
SECTION

APPENDIX K

(~~p~~Page 1 of 2)

DURING DESIGN, DISCUSS APPROPRIATE LOCATION.

READING RECOVERY OBSERVATION WINDOW (January 28, 2016)

The following comments and quick sketch illustrate the Reading Recovery Observation Window. Pay special attention to the jamb sections that have not been drawn.

- Presumably, all future windows will be installed in 8" CMU wall between two Resource Classrooms. Use masonry dimensions to size the width (8'-0") and height (4'-0") of the openings. The bottom of the opening shall be 2'-0" above the floor; the top at 6'-0" above the floor.
- At existing CMU walls, cut an opening large enough to suit the installation of the frame and lintel chosen. Patch the masonry at the jambs and head to match existing CMU.
- Ensure that the wall extends above the ceiling to roof deck to provide acoustical separation between tutoring and observation, and to eliminate noise distractions from the corridor.
- The hollow metal frame should be detailed to suit the two layers of glass required:
    - The vertical layer with reflection/mirror finish faces the Tutoring Side; the layer with the 87" tilt shall face the Observation Side; **PLEASE CHECK YOUR DETAILS TO ENSURE THIS IS CORRECT!** Specify glass types as noted in the guidelines.
    - Depending on the distance between the two layers of glass at the bottom of the window, the 87"-tilt will require that the dimension between the glass layers at the top is nearly the thickness of the 8" CMU wall. The glass stops around the opening (especially at the jambs) will have to suit the changing distance between the glass layers. Consider a wrap-around cased opening frame with applied stops rather than a standard rabbeted frame. (See attached sketch.) A wrap-around frame will also hide rough masonry cuts where they exist.
- The glass opening should be maximized (as close to 8'-0" wide X 4'-0" high as possible) to fill the hollow metal frame in the masonry opening.
- Provide mini blinds on the Observation Side that match those throughout the rest of the building. Mount these to suit the hollow metal frame or the lintel above the opening similar to blinds installed elsewhere in the building.
- No track lighting is required about the Tutoring area.

Sound system with microphones and switches will be furnished and installed by FCPS. Ensure that sufficient power outlets are available in the vicinity of the window.

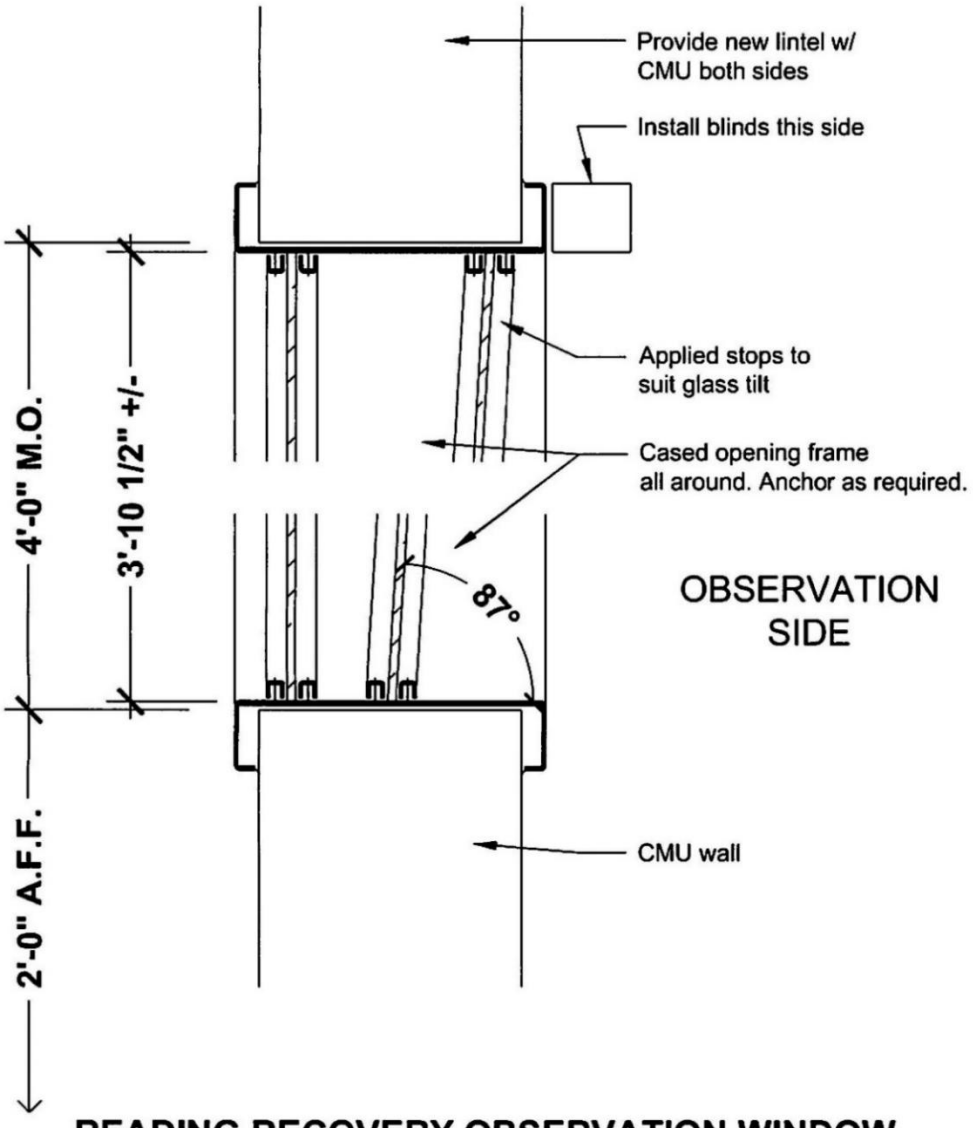

READING RECOVERY OBSERVATION WINDOW

APPENDIX L

FMD ROOM CHANGING TABLE (OFOI)

Home / Medical Tables & Equipment / H-Brace & Treatment Tables / Specialty Tables / Electric Hi-Lo 30"x52-68" Changing Table with Paper Dispenser/Cutter

ELECTRIC HI-LO 30"X52-68" CHANGING TABLE WITH PAPER DISPENSER/CUTTER

SKU: 4702

Overview | Measurements

- Electrically activated hydraulic cylinders are built into each (4) Corner Telescoping Legs.
- Motorized table lowers to 20" wheelchair height. Elevates up to 30" high.
- Hands-free foot control operation.
- Black powder coated legs with levelers for uneven □ floors.
- Vinyl upholstered tops with 2" high-density foam.
- 16" Long legrest extends overall top length to 68".
- Includes: Paper Dispenser and Cutter.
- Upholstery: Choice of Pro-Form™ vinyl colors.

Overview | Measurements

MEASUREMENTS

Weight Capacity: 400 lb (181kg)

ITEM #	LENGTH	WIDTH	HEIGHT	VINYL
4702*	52" – 68"(132 – 173cm)	30"(76cm)	20" – 30"(51 – 76cm)	Custom

FCPS Special Ed Dept.
7/25/22

APPENDIX M

(Page 1 of 3)

DENTAL VAN CONNECTION

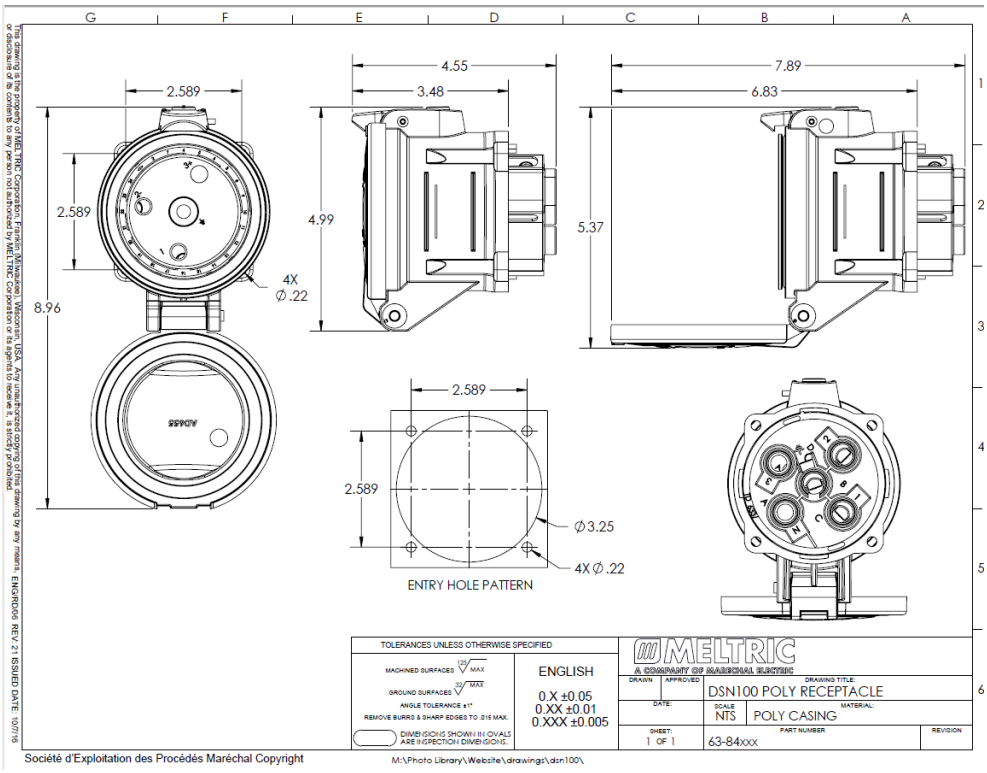

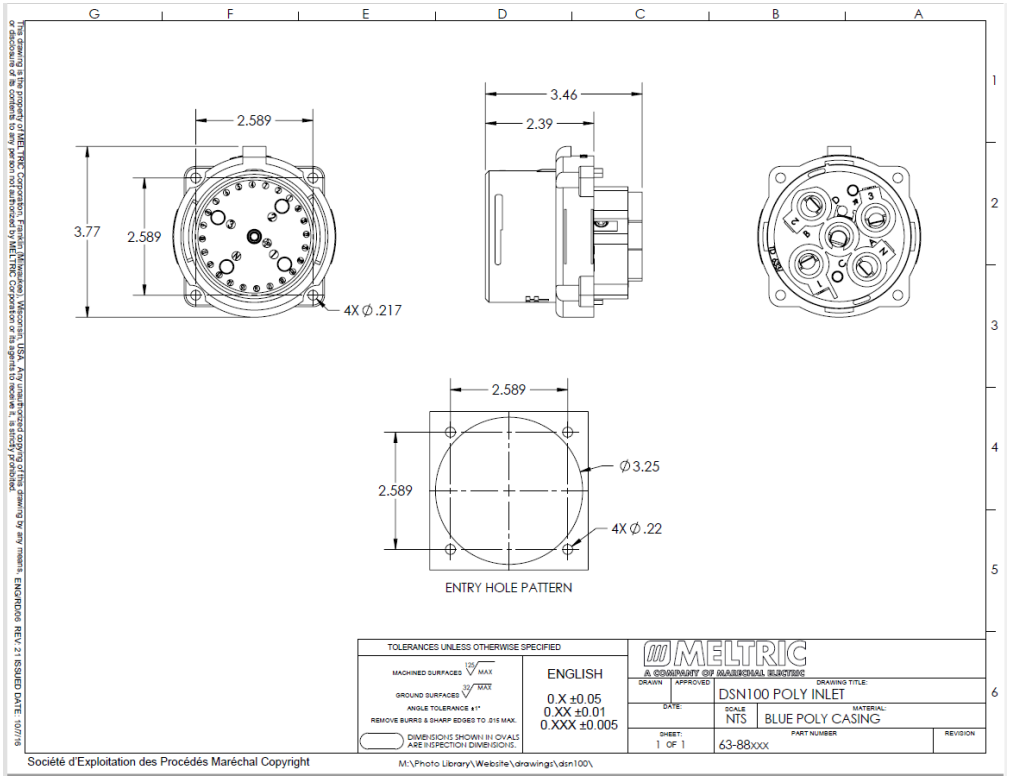

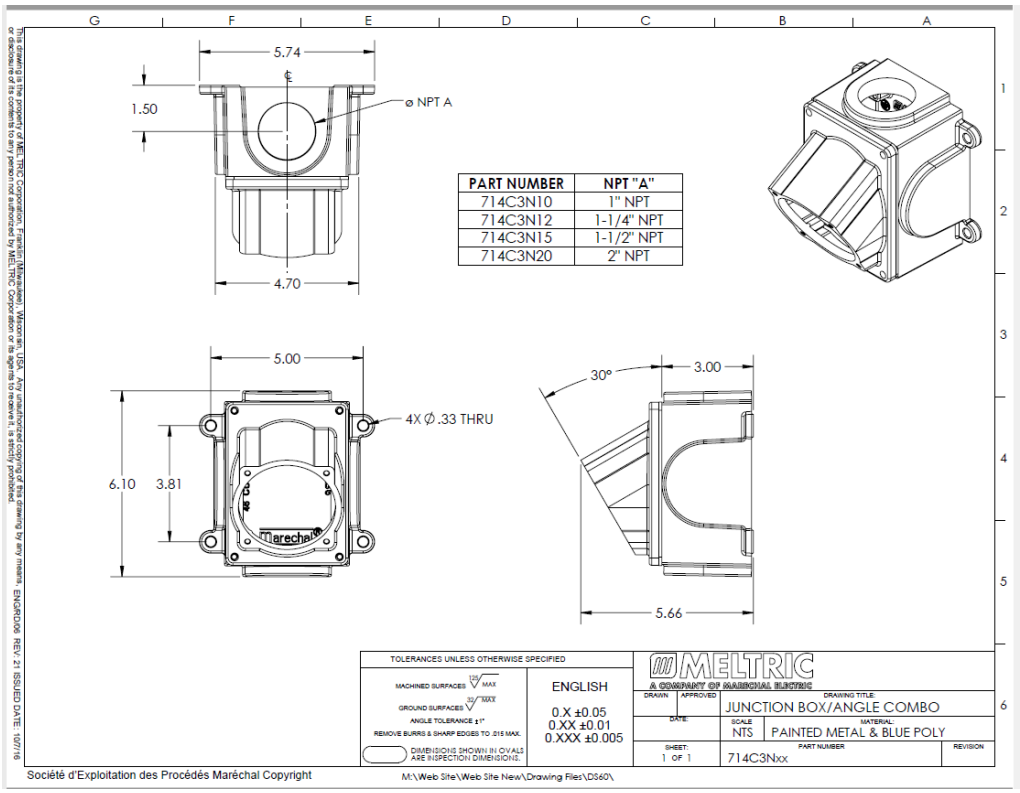
5.74
1.50
ø NPT A
4.70
5.00
4X Ø .33 THRU
6.10
3.81
30°
3.00
5.66
PART NUMBER | NPT "A"
714C3N10 | 1" NPT
714C3N12 | 1-1/4" NPT
714C3N15 | 1-1/2" NPT
714C3N20 | 2" NPT
TOLERANCES UNLESS OTHERWISE SPECIFIED
ENGLISH
0.X ±0.05
0.XX ±0.01
0.XXX ±0.005
MELTRIC
A COMPANY OF MARECHAL ELECTRIC
DRAWING TITLE: JUNCTION BOX/ANGLE COMBO
SCALE: NTS
MATERIAL: PAINTED METAL & BLUE POLY
PART NUMBER: 714C3Nxx
SHEET: 1 OF 1
Société d'Exploitation des Procédés Maréchal Copyright
M:\Web Site\Web Site New\Drawing Files\DS60\

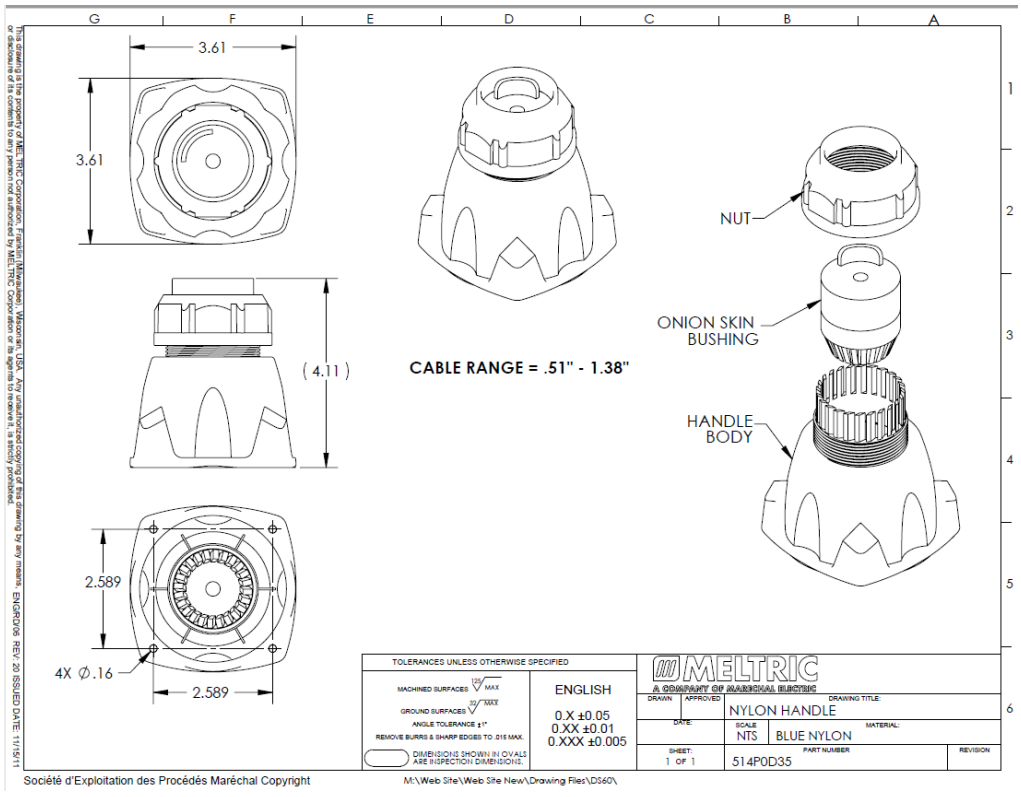
3.61
3.61
(4.11)
2.589
4X Ø .16
2.589
CABLE RANGE = .51" - 1.38"
NUT
ONION SKIN BUSHING
HANDLE BODY
TOLERANCES UNLESS OTHERWISE SPECIFIED
ENGLISH
0.X ±0.05
0.XX ±0.01
0.XXX ±0.005
MELTRIC
A COMPANY OF MARECHAL ELECTRIC
DRAWING TITLE: NYLON HANDLE
SCALE: NTS
MATERIAL: BLUE NYLON
PART NUMBER: 514P0D35
SHEET: 1 OF 1
Société d'Exploitation des Procédés Maréchal Copyright
M:\Web Site\Web Site New\Drawing Files\DS60\

APPENDIX M

(Page 3 of 3)~~APPENDIX M (page 3)~~

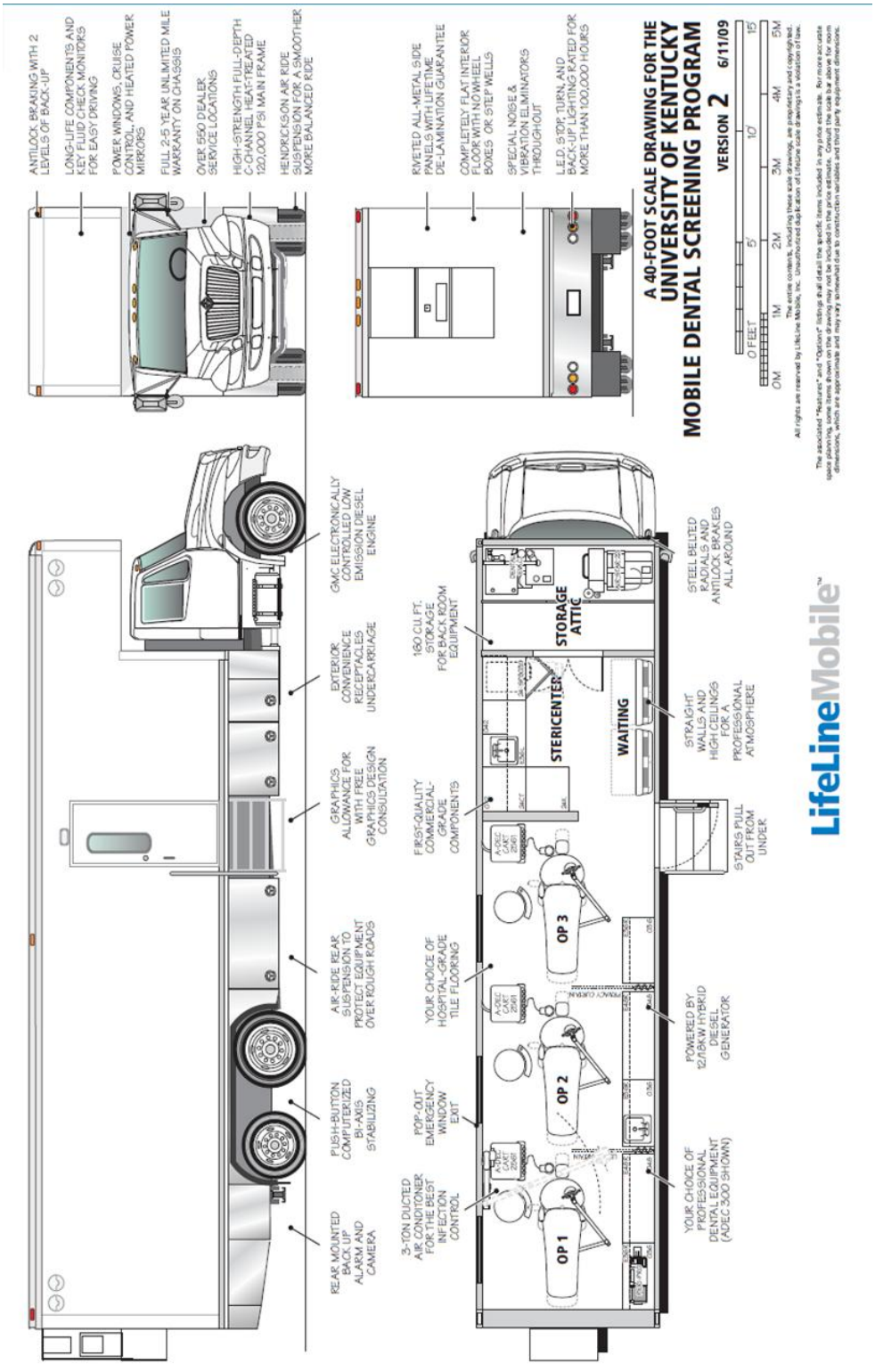

APPENDIX N

CUSTODIAL SCRUBBER CUT SHEET

CARBON

Series Scrubber Specifications

AUTHORIZED DISTRIBUTOR

BODY CONSTRUCTION / DIMENSIONS	
Tank Material:	Poly 3/8" *(10 mm)*
Chassis Construction:	3/16" *(5 mm)* Powder Coated Steel
Front Wheels (Diameter x Width):	(2x) 10" x 2.5" *([2x] 25 x 6 cm)* - Non-Marking Solid Grey
Rear Casters (Diameter x Width):	(2x) 4" x 2" *([2x] 10 x 5 cm)* - Non-Marking Grey
Size (L x W x H):	52" x 22" x 40" *(132 x 56 x 102 cm)*
Weight (w/o Batteries):	393 - 443 lbs *(178 - 201 kg)*
Weight (w/ 210 ah Batteries):	625 - 675 lbs *(284 - 306 kg)*
BRUSH / PAD SYSTEM	
Disk Dimensions: Includes Jaws with Rollers for Wall Protection	26" - (2x) 13" Diameter *(66 - [2x] 33 cm)* 28" - (2x) 14" Diameter *(71 - [2x] 36 cm)*
Disk Motor:	(2x) 0.75 hp / 270 rpm *([2x] 559 watts)*
Optional Motor Upgrade:	(2x) 1.0 hp / 350 rpm *([2x] 746 watts)*
Disk Brush Speed:	270 rpm or 350 rpm
Cylindrical Dimensions: 6" Diameter Brush	25" - (2x) 6" x 23" *(63.5 - [2x] 15 x 58 cm)* 29" - (2x) 6" x 27" *(73.7 - [2x] 15 x 69 cm)*
Cylindrical Motor:	25" - (2x) 0.75 hp / 350 rpm *([2x] 559 watts)* 29" - (2x) 1.0 hp / 350 rpm *([2x] 746 watts)*
Cylindrical Brush Speed:	750 rpm
EDGE Dimensions:	24" x 14" *(70 x 36 cm)* 28" x 14" *(71 x 36 cm)*
EDGE Motor:	1.0 hp / 2500 rpm *(746 watts)*
EDGE Optional HD Motor:	1.2 hp / 2900 rpm *(894 watts)*
Actuator Rating:	500 lbs *(227 kg)*
Brush Pressure Settings:	(5) with Auto Adjust
Brush Down Pressure:	Up to 175 lbs *(79 kg)*
POWER SYSTEM	
System Voltage:	24 VDC
Standard Battery:	210 ah WET
Optional Battery: *Includes Onboard Charger	245 ah WET / 250 ah AGM*
Run Time: **Run times are based on continuous scrubbing run times.	Up to 3.5 Hours**
Charger:	120VAC / 60 Hz Input - 24VDC / 25 amp Output
DRIVE SYSTEM:	
Power:	0.75hp - All Gear / Sealed *(559 watts)*
Forward Speed:	0 - 290 ft/min / 0 - 3.3 mph *(0 - 88 m/min / 0 - 5 km/h)*
Scrubbing Speed:	0 - 229 ft/min / 0 - 2.6 mph *(0 - 70 m/min / 0 - 4 km/h)*
Reverse Speed:	0 - 202 ft/min / 0 - 2.3 mph *(0 - 62 m/min / 0 - 4 km/h)*
SOLUTION / RECOVERY SYSTEMS:	
Solution Tank Capacity:	16 Gallons *(61 liters)* - w/ Graduated Site Tube
XL Tank Option Solution Capacity:	21 Gallons *(80 liters)* - w/ Graduated Site Tube
Solution Flow / Filter:	0 - 0.7 GPM / Stainless Inline *(0 - 2 LPM)*
Recovery Tank Capacity:	17 Gallons *(64 liters)* - 1.5" diameter Drain Hose
XL Tank Option Recovery Capacity:	23 Gallons *(87 liters)* - 1.5" diameter Drain Hose
Demisting Chamber:	1.25 Gallons *(5 liters)*
Drain Saver:	30 cubic inches *(492 cubic cm)*
Vacuum Power:	0.8 hp / 3 Stage *(640 watts)*
Vacuum Specs (Water Lift / Airflow):	68" / 72 cfm *(173 cm / 2 cm/m)*
Squeegee:	36" Curved w/ 4-sided Rear Blade & Quick Change Latch *Optional* - 42" Squeegee
GENERAL:	
Cleaning Width:	26" & 28" - Disk *(66 & 71 cm)* 25" & 29" - Cylindrical *(64 & 74 cm)* 24" & 28" - EDGE *(70 & 71 cm)*
Decibels:	62 dB
Productivity - Theoretical: ***Productivity is based off of ISSA 2010 Cleaning Times	Up to 27,027 sqft *(2,510.9 sqm)****
Productivity - Practical: ***Productivity is based off of ISSA 2010 Cleaning Times	Up to 12,526 sqft *(1,163.7 sqm)****

TOMCAT®

www.tomcatequip.com
Phone: (800) 450-9824
International: (+001) 262-681-6470

© RPS Corporation 2016 All Rights Reserved

Provided by FCPS Grounds & Custodial Support 8/15/23

As our policy is one of constant improvement, all specifications are subject to change without notice.

(10/16) TC-CARBON-SALESSHEET