CONSTRUCTION DRAWINGS FOR
LODI HIGH SCHOOL
ATHLETIC FIELD IMPROVEMENTS

3 S PACIFIC AVE
LODI, CA 95242
LODI UNIFIED SCHOOL DISTRICT
DSA PROJECT NO. 02-123587
VERDE DESIGN, INC. PROJECT NO. 2502700

PROJECT MAP

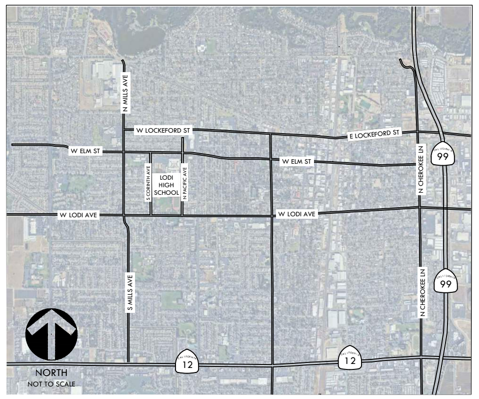

VICINITY MAP

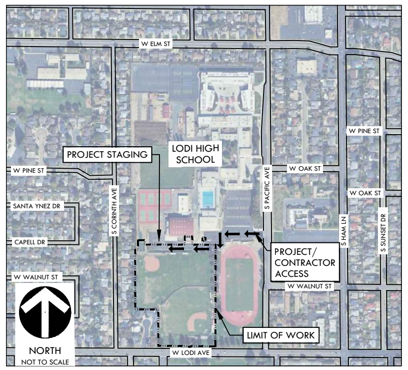

SITE MAP

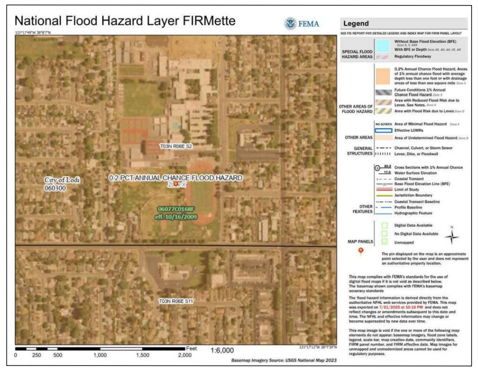
National Flood Hazard Layer FIRMette
FEMA
Legend
SPECIAL FLOOD HAZARD AREAS
Without Base Flood Elevation (BFE)
With BFE or Depth
Regulatory Floodway
0.2% Annual Chance Flood Hazard
Future Conditions 1% Annual Chance Flood Hazard
Area with Reduced Flood Risk due to Levee
0.2 PCT ANNUAL CHANCE FLOOD HAZARD
Feet
0 250 500 1,000 1,500 2,000
1:6,000
Basemap Imagery Source: USGS National Map 2023

FLOOD MAP

APPLICABLE CODES

1. 2022 CBC CHAPTER 35: PROVIDE ALL THE APPLICABLE/ADOPTED STANDARDS. WHERE A PARTICULAR STANDARD IS REFERENCED IN THE CODE BUT DOES NOT APPEAR AS AN ADOPTED STANDARD IT MAY STILL BE USED. APPLY ONLY THE PORTION OF THE STANDARD THAT IS APPLICABLE TO THE CODE SECTION WHERE THE STANDARD IS REFERENCED, NOT THE ENTIRE STANDARD.

   2025 CALIFORNIA BUILDING STANDARDS ADMINISTRATIVE CODE, PART 1, TITLE 24 C.C.R.
   2022 CALIFORNIA BUILDING CODE (CBC), PART 2, TITLE 24 C.C.R.
   (2021 INTERNATIONAL BUILDING CODE VOLUMES 1-2)
   2022 CALIFORNIA ELECTRICAL CODE (CEC), PART 3, TITLE 24 C.C.R.
   (2020 NATIONAL ELECTRICAL CODE)
   2022 CALIFORNIA MECHANICAL CODE (CMC) PART 4, TITLE 24 C.C.R.
   (2021 UNIFORM MECHANICAL CODE)
   2022 CALIFORNIA PLUMBING CODE (CDC), PART 5, TITLE 24 C.C.R.
   (2021 UNIFORM PLUMBING CODE)
   2022 CALIFORNIA ENERGY CODE, PART 6, TITLE 24 C.C.R.
   2022 CALIFORNIA FIRE CODE, PART 9, TITLE 24 C.C.R.
   (2021 INTERNATIONAL FIRE CODE AND 2022 CALIFORNIA AMENDMENTS)
   2022 CALIFORNIA EXISTING BUILDING CODE, PART 10, TITLE 24 C.C.R.
   (2021 INTERNATIONAL EXISTING BUILDING CODE)
   2022 CALIFORNIA "GREEN" BUILDING REQUIREMENTS OR CAL GREEN, PART 11, TITLE 24 C.C.R.
   2022 CALIFORNIA REFERENCED STANDARDS, PART 12, TITLE 24 C.C.R.
   2022 TITLE 19 C.C.R., PUBLIC SAFETY, STATE FIRE MARSHAL REGULATIONS.

   LIST OF FEDERAL CODES AND STANDARDS (IF APPLICABLE)
   AMERICANS WITH DISABILITIES ACT (ADA), TITLE II OR TITLE III
   FOR TITLE II: UNIFORM FEDERAL ACCESSIBILITY STANDARDS (UFAS)
   28 CFR 35.151(C)
   OR ADA STANDARDS FOR ACCESSIBLE DESIGN (APPENDIX A OF 28 CFR PART 35)
   FOR TITLE III: ADA STANDARDS FOR ACCESSIBLE DESIGN (APPENDIX A OF 28 CFR PART 36)
   28 CFR 36.406
   2010 AMERICANS WITH DISABILITIES ACT (ADA) STANDARDS FOR ACCESSIBLE DESIGN

NOTE: TITLE II APPLIES TO PROJECTS FUNDED AND/OR USED BY STATE AND LOCAL GOVERNMENT SERVICES. TITLE III COVERS PUBLIC ACCOMMODATIONS AND COMMERCIAL FACILITIES. DEPENDING ON THE USE AND FUNDING, BOTH TITLE MAY APPLY TO THE PROJECT.

NFPA 13	AUTOMATIC SPRINKLER SYSTEMS	2022 EDITION
NFPA 14	STANDPIPE SYSTEMS	2022 EDITION
NFPA 17	DRY CHEMICAL EXTINGUISHING SYSTEMS	2021 EDITION
NFPA 17A	WET CHEMICAL EXTINGUISHING SYSTEMS	2021 EDITION
NFPA 20	STATIONARY FIRE PUMPS	2022 EDITION
NFPA 24	PRIVATE FIRE SERVICE MAINS	2022 EDITION
NFPA 72	NATIONAL FIRE ALARM AND SIGNALING CODE (CALIFORNIA AMENDED) (NOTE SEE UL STANDARD 1971 FOR "VISUAL DEVICES)	2022 EDITION
NFPA 253	CRITICAL RADIANT FLUX OF FLOOR COVERING SYSTEMS	2023 EDITION
NFPA 2001	CLEAN AGENT FIRE EXTINGUISHING SYSTEMS	2022 EDITION

REFERENCE CODE SECTIONS FOR APPLICABLE STANDARDS - 2025 CALIFORNIA BUILDING CODE (FOR SFM) REFERENCED STANDARDS CHAPTER 35

ADA STANDARD FOR ACCESSIBLE DESIGN (APPENDIX A OF 28 CFR PART 36)

2. THE INTENT OF THESE DRAWINGS AND SPECIFICATIONS IS THAT WORK OF THE ALTERATION, REHABILITATION OR RECONSTRUCTION IS TO BE IN ACCORDANCE WITH TITLE 24, CALIFORNIA CODE OF REGULATIONS. SHOULD ANY EXISTING CONDITIONS SUCH AS DETERIORATION OR NON-COMPLYING CONSTRUCTION BE DISCOVERED WHICH IS NOT COVERED BY THE CONTRACT DOCUMENTS WHEREIN THE FINISHED WORK WILL NOT COMPLY WITH TITLE 24, CALIFORNIA CODE OF REGULATIONS, A CHANGE ORDER, OR A SEPARATE SET OF PLANS AND SPECIFICATIONS, DETAILING AND SPECIFYING THE REQUIRED WORK SHALL BE SUBMITTED TO AND APPROVED BY THE OWNER REPRESENTATIVE BEFORE PROCEEDING WITH THE WORK.
3. ALL EXISTING FIRE EXTINGUISHING SYSTEMS ARE IN COMPLIANCE WITH UL 300, CBC 904.11, CFC 904.11.

PREPARED BY

REGISTERED LANDSCAPE ARCHITECT
MARK S. BAGINSKI
No. 4089
Signature
EXPIRATION DATE: JULY 2027
STATE OF CALIFORNIA

REGISTERED PROFESSIONAL ENGINEER
TIM D. HYDE
No. S3260
Exp. 3-31-27
STRUCTURAL
STATE OF CALIFORNIA

REGISTERED PROFESSIONAL ENGINEER
NATHAN A. HEARN
No. E 23927
3-31-2026
ELECTRICAL
STATE OF CALIFORNIA
Date Signed: 12/08/2025

VERDE DESIGN
LANDSCAPE ARCHITECTURE
CIVIL ENGINEERING
SPORT PLANNING & DESIGN
1843 Iron Point Rd. Suite 140
Folsom, CA 95630
tel: 916.415.6554
fax: 916.415.6525
www.VerdeDesignInc.com

ALL IDEAS, DESIGNS, ARRANGEMENTS, AND PLANS INDICATED OR REPRESENTED BY THIS DRAWING ARE OWNED BY AND THE PROPERTY OF VERDE DESIGN, INC., AND WERE CREATED, EVOLVED, AND DEVELOPED FOR USE ON AND IN CONNECTION WITH THE SPECIFIED PROJECT. NONE OF SUCH IDEAS, DESIGNS, ARRANGEMENTS OR PLANS SHALL BE USED, REPRODUCED, OR PUBLISHED BY ANY METHOD IN WHOLE OR IN PART, OR DISCLOSED TO ANY PERSON, FIRM OR CORPORATION FOR ANY PURPOSE WHATSOEVER WITHOUT WRITTEN PERMISSION OF VERDE DESIGN, INC.

AKH
Structural Engineers, Inc
275 Tennant Avenue, Ste. 204 ph: 408.978.1970
Morgan Hill, California 95037 web: AKHSE.com

capital engineering
RANCHO CORDOVA, CALIFORNIA

SCOPE OF WORK

SCOPE OF WORK TO INCLUDE BUT NOT LIMITED TO: SITE DEMOLITION AND REMOVAL OF EXISTING FENCING, HARDSCAPE, TURF, IRRIGATION, AND EXISTING BASEBALL AND SOFTBALL ELEMENTS AT EXISTING BASEBALL AND SOFTBALL FIELDS. CONSTRUCTION OF NEW SYNTHETIC TURF BASEBALL INFIELDS WITH NATURAL TURF OUTFIELDS. CONSTRUCTION OF NEW SYNTHETIC TURF SOFTBALL INFIELDS WITH NATURAL TURF OUTFIELDS. IMPROVEMENTS AT THE BASEBALL AND SOFTBALL FIELD TO INCLUDE: CONSTRUCTION OF NEW 30' TALL CHAIN LINK BACKSTOP, NEW DUGOUTS WITH METAL STRUCTURE AND PERIMETER FENCING, NEW HOME AND VISITOR BULLPENS, AND NEW FOUL POLES. CONSTRUCTION TO INCLUDE NEW PERIMETER FENCING WITH MOW BANDS, NEW SITE FURNISHINGS AND AMENITIES, NEW DOUBLE GATES FOR MAINTENANCE ACCESS, NEW HARDSCAPE, LANDSCAPE AND IRRIGATION, NEW ELECTRICAL POWER FOR DUGOUTS, BULLPENS, SCORERS' AREA, BATTING CAGE, SPORTSFIELD, AND EGRESS LIGHTING, AND ADA IMPROVEMENTS.

BID ALTERNATES

ADD ALTERNATE #01 BATTING CAGES:
SCOPE OF WORK TO INCLUDE BUT NOT LIMITED TO: ALL WORK RELATED TO THE CONSTRUCTION OF NEW BASEBALL AND SOFTBALL BATTING CAGES AS SHOWN ON THE DRAWINGS.

ADD ALTERNATE #02 20' TALL PROTECTIVE NETTING:
SCOPE OF WORK TO INCLUDE BUT NOT LIMITED TO: ALL WORK RELATED TO THE CONSTRUCTION OF 20' TALL TOTAL HEIGHT PROTECTIVE NETTING AS SHOWN ON THE DRAWINGS.

GENERAL NOTES

1. PRIOR TO BIDDING, THE GENERAL CONTRACTOR SHALL VISIT & INSPECT THE SITE & FAMILIARIZE THEMSELVES WITH EXISTING CONDITIONS AFFECTING THE NEW WORK. THE GENERAL CONTRACTOR SHALL NOT DISPUTE, COMPLAIN OR ASSERT THAT THERE IS ANY MISUNDERSTANDING IN REGARDS TO LOCATION, EXTENT, NATURE OR AMOUNT OF WORK TO BE PERFORMED UNDER THIS CONTRACT DUE TO THE CONTRACTOR'S FAILURE TO INSPECT THE SITE. CONTRACTOR SHALL NOTIFY DISTRICT'S REPRESENTATIVE OF ANY CONDITIONS, REQUIRING WORK, WHICH ARE NOT COVERED IN THE CONTRACT DOCUMENTS.
2. NO CONSTRUCTION SHALL COMMENCE WITHOUT THE OFFICIAL NOTICE TO PROCEED FROM THE DISTRICT.
3. THE GENERAL CONTRACTOR & SUBCONTRACTORS ARE RESPONSIBLE FOR LOCATING & VERIFYING ALL EXISTING UNDERGROUND UTILITIES IN ALL AREAS OF NEW WORK PRIOR TO COMMENCEMENT OF EXCAVATION. EXISTING UTILITIES SHOWN ON THE DRAWINGS ARE APPROXIMATE ROUTING LOCATIONS AS BEST DETERMINED FROM EXISTING DRAWINGS AND THE SCHOOL DISTRICT, BUT SHOULD NOT BE CONSTRUED TO REPRESENT ALL OF THE EXISTING UNDERGROUND UTILITIES. THE CONTRACTOR SHALL POTHOLE ALL EXISTING UTILITIES THAT MAY BE AFFECTED BY NEW FACILITIES IN THIS CONTRACT. VERIFY ACTUAL LOCATION AND DEPTH OF UTILITIES, AND REPORT POTENTIAL CONFLICTS TO THE DISTRICT'S REPRESENTATIVE PRIOR TO EXCAVATING FOR NEW FACILITIES.
4. CONTRACTOR SHALL TAKE ALL NECESSARY STEPS TO PROTECT ALL EXISTING UTILITIES, WHETHER SHOWN OR NOT, IN THE CONTRACT DOCUMENTS. CONTRACTOR SHALL BE RESPONSIBLE FOR ALL DAMAGES TO EXISTING UTILITIES CAUSED BY ITS OPERATIONS.
5. THE CONTRACTOR SHALL PROTECT ALL EXISTING ITEMS WITHIN SITE IMPROVEMENTS. IT IS THE RESPONSIBILITY OF THE CONTRACTOR TO REPAIR ALL DAMAGED AREAS TO THEIR ORIGINAL CONDITION OR BETTER AT CONTRACTOR'S EXPENSE TO THE SATISFACTION OF THE DISTRICT'S REPRESENTATIVE.
6. DIMENSIONS AND LOCATIONS OF EXISTING FACILITIES ARE APPROXIMATE AND SHALL BE FIELD VERIFIED BY CONTRACTOR. ANY DISCREPANCIES SHALL BE IMMEDIATELY BROUGHT TO THE ATTENTION OF THE DISTRICT'S REPRESENTATIVE.
7. ALL WORK SHALL CONFORM TO THE 2022 EDITION OF THE CALIFORNIA BUILDING CODE, CALIFORNIA PLUMBING CODE, CALIFORNIA FIRE CODE AND ALL APPLICABLE STATE AND LOCAL CODES AND ORDINANCES, AS WELL AS ADAPTED STANDARDS.
8. ALL NOTES ARE FOR GENERAL REFERENCE IN CONJUNCTION WITH, AND AS A SUPPLEMENT TO, THE WRITTEN SPECIFICATIONS AND DETAILS ASSOCIATED WITH THE CONTRACT DOCUMENTS.
9. THIS DRAWING SET SHALL BE USED IN CONJUNCTION WITH THE CSI FORMAT SPECIFICATIONS PUBLISHED IN BOOK FORM. COMBINED, THEY ARE HEREIN REFERRED TO AS THE "CONTRACT DOCUMENTS".
10. DIMENSIONS ON WORKING DRAWINGS TAKE PRECEDENCE OVER MEASURED ELEMENTS. CONTRACTOR SHALL NOT SCALE DRAWINGS.
11. ALL TYPICAL DETAILS SHALL APPLY UNLESS NOTED OTHERWISE.
12. CONTRACTOR SHALL PROVIDE ADEQUATE DUST CONTROL AND KEEP MUD AND DEBRIS OFF THE PUBLIC RIGHT-OF-WAY AT ALL TIMES.
13. ALL TRENCHES AND EXCAVATIONS SHALL BE CONSTRUCTED IN STRICT COMPLIANCE WITH THE APPLICABLE SECTIONS OF CALIFORNIA AND FEDERAL O.S.H.A. REQUIREMENTS AND OTHER APPLICABLE SAFETY ORDINANCES. CONTRACTOR SHALL BEAR FULL RESPONSIBILITY FOR TRENCH SHORING DESIGN AND INSTALLATION.
14. ANY ALTERATIONS OF EXISTING FACILITIES TO ACCOMMODATE THE INSTALLATION OF NEW WORK SHALL BE REVIEWED BY THE DISTRICT'S REPRESENTATIVE PRIOR TO COMMENCING WORK.
15. CONTRACTOR SHALL COORDINATE ALL WORK TO AVOID DISTURBING STUDENTS OR TEACHERS DURING SCHOOL HOURS. ANY DISRUPTION OF THE UTILITIES MUST BE COORDINATED AND APPROVED BY THE DISTRICT'S REPRESENTATIVE AND INSPECTOR OF RECORD PRIOR TO COMMENCING WORK.
16. ALL TEMPORARY WORK SHALL BE CONSIDERED A PART OF THIS CONTRACT AND NO EXTRA CHARGES WILL BE ALLOWED. THIS SHALL INCLUDE MINOR ITEMS OF MATERIAL OR EQUIPMENT NECESSARY TO MEET THE REQUIREMENTS AND INTENT OF THE PROJECT.
17. THE PLANS AND SPECIFICATIONS DO NOT UNDERTAKE TO SHOW OR LIST EVERY ITEM TO BE PROVIDED, BUT RATHER TO DEFINE THE REQUIREMENTS FOR A FULL AND WORKING SYSTEM FROM THE STANDPOINT OF THE END USER. FOR THIS REASON, WHEN AN ITEM NOT SHOWN OR LISTED IS CLEARLY NECESSARY FOR PROPER CONTROL/OPERATION OF EQUIPMENT WHICH IS SHOWN OR LISTED, THE CONTRACTOR SHALL PROVIDE AN ITEM WHICH WILL ALLOW THE SYSTEM TO FUNCTION PROPERLY AT NO INCREASE IN PRICE.
18. ALL CONTRACTORS SHALL REMOVE TRASH AND DEBRIS STEMMING FROM THEIR WORK ON A DAILY BASIS. PROJECT SITE SHALL BE MAINTAINED IN A CLEAN AND ORDERLY CONDITION.
19. THE DETAILS REFLECT THE DESIGN INTENT FOR TYPICAL CONDITIONS. THE CONTRACTOR SHALL VERIFY ALL FIELD CONDITIONS AND SHALL INCLUDE, IN HIS SCOPE, THE COST FOR COMPLETE FINISHED INSTALLATIONS, INCLUDING ANOMALIES, OF ALL TRADES.
20. NO WORK SHALL COMMENCE WITH UNAPPROVED MATERIALS. ANY WORK DONE WITH UNAPPROVED MATERIALS AND EQUIPMENT IS AT THE CONTRACTOR'S RISK AND IS SUBJECT TO REJECTION AND REPLACEMENT. SEE SPECIFICATIONS FOR SUBMITTAL AND SUBSTITUTION REQUIREMENTS.
21. CONSTRUCTION MATERIALS STORED ON THE SITE SHALL BE PROPERLY STACKED AND PROTECTED SO AS TO PREVENT DAMAGE OR DETERIORATION UNTIL USED. FAILURE IN THIS REGARD MAY BE CAUSE FOR REJECTION OF MATERIAL AND/OR WORK.
22. ALL EQUIPMENT SHALL BE FABRICATED FROM FIELD VERIFIED DIMENSIONS AND APPROVED SHOP DRAWINGS. COORDINATE MECHANICAL, PLUMBING AND ELECTRICAL EQUIPMENT.
23. CONTRACTOR SHALL PERFORM THEIR CONSTRUCTION AND OPERATIONS IN A MANNER WHICH WILL NOT ALLOW HARMFUL POLLUTANTS TO ENTER THE STORM DRAIN SYSTEM. TO ENSURE COMPLIANCE, THE CONTRACTOR SHALL IMPLEMENT THE APPROPRIATE BEST MANAGEMENT PRACTICE (BMP) AS OUTLINED IN THE BROCHURES ENTITLED "BEST MANAGEMENT PRACTICE FOR THE CONSTRUCTION INDUSTRY" ISSUED BY THE CALIFORNIA STORM WATER QUALITY ASSOCIATION, NONPOINT SOURCE POLLUTION CONTROL PROGRAM, TO SUIT THE CONSTRUCTION SITE AND JOB CONDITION. THE CONTRACTOR SHALL PRESENT THEIR PROPOSED BMP AT THE PRECONSTRUCTION MEETING FOR DISCUSSION AND APPROVAL.
24. CONTRACTOR SHALL PROVIDE TEMPORARY CONSTRUCTION FENCING PER CONTRACT DOCUMENTS TO SERVE LIMIT OF WORK AREAS. FENCING MAY BE ADJUSTED DURING CONSTRUCTION BASED ON CONSTRUCTION SEQUENCE OR DISTRICT REPRESENTATIVE'S DIRECTION.
25. OVERNIGHT PARKING OF CONSTRUCTION EQUIPMENT IN THE STREET RIGHT-OF-WAY SHALL NOT BE PERMITTED.

IDENTIFICATION STAMP
DIV. OF THE STATE ARCHITECT
APP: 02-123587 INC:
REVIEWED FOR
SS ☑ FLS ☑ ACS ☑
DATE: 01/16/2026

CONTACT INFORMATION

ORGANIZATION	NAME	PHONE
OWNER		
LODI UNIFIED SCHOOL DISTRICT	JOE PATTY	(209) 712-6363
CIVIL ENGINEER/ LANDSCAPE ARCHITECT		
VERDE DESIGN INC.	MARK BAGINSKI CHRIS SULLIVAN	(408) 823-1514 (916) 996-5525
ELECTRICAL ENGINEER		
CAPITAL ENGINEERING	NATHAN HEARN	(916) 851-3568
STRUCTURAL ENGINEER		
AKH STRUCTURAL ENGINEERING	TIM HYDE	(408) 978-1970 EXT. 114

SHEET INDEX (79 SHEETS)

*

SHEET NO.	SHEET DESCRIPTION
C0.0	COVER SHEET
L0.1	ACCESSIBILITY PLAN
L0.2	FIRE LIFE SAFETY PLAN
L0.3	SITE PLAN
L1.1	EXISTING CONDITIONS AND SURVEY PLAN - BASEBALL FIELD
L1.2	EXISTING CONDITIONS AND SURVEY PLAN - SOFTBALL FIELD
L2.1	EROSION AND SEDIMENT CONTROL PLAN - BASEBALL FIELD
L2.2	EROSION AND SEDIMENT CONTROL PLAN - SOFTBALL FIELD
L3.1	DEMOLITION PLAN - BASEBALL FIELD
L3.2	DEMOLITION PLAN - SOFTBALL FIELD
L4.1	GRADING PLAN - BASEBALL FIELD
L4.2	GRADING PLAN - SOFTBALL FIELD
L5.1	DRAINAGE AND UTILITY PLAN - BASEBALL FIELD
L5.2	DRAINAGE AND UTILITY PLAN - SOFTBALL FIELD
L6.1	LAYOUT PLAN - BASEBALL FIELD
L6.2	LAYOUT PLAN - SOFTBALL FIELD
L7.1	MATERIAL AND DETAIL REFERENCE PLAN - BASEBALL FIELD
L7.2	MATERIAL AND DETAIL REFERENCE PLAN - SOFTBALL FIELD
L8.1	IRRIGATION PLAN - BASEBALL FIELD
L8.2	IRRIGATION PLAN - SOFTBALL FIELD
L8.3	IRRIGATION SUPPLEMENTAL INFORMATION
L9.1	PLANTING PLAN - BASEBALL FIELD
L9.2	PLANTING PLAN - SOFTBALL FIELD
D1.1	DRAINAGE AND UTILITY DETAILS
D1.2	DRAINAGE AND UTILITY DETAILS
D2.1	CONSTRUCTION DETAILS - HARDSCAPE
D2.2	CONSTRUCTION DETAILS - HARDSCAPE
D3.1	FENCING DETAILS
D3.2	FENCING DETAILS
D3.3	FENCING DETAILS
D3.4	FENCING DETAILS
D4.1	CONSTRUCTION DETAILS - BASEBALL
D4.2	CONSTRUCTION DETAILS - BASEBALL
D4.3	CONSTRUCTION DETAILS - SOFTBALL
D4.4	CONSTRUCTION DETAILS - ADDITIVE ALTERNATES
D5.1	PLANTING AND IRRIGATION DETAILS
D6.1	EXISTING RESTROOM BUILDING DETAILS

SHEET NO.	SHEET DESCRIPTION
STRUCTURAL PLANS	
S1.1	STRUCTURAL NOTES AND MATERIAL GRADES
S4.1	SITE STRUCTURES FOUNDATION DETAILS
S4.2	SITE STRUCTURES SCHEMATIC DETAILS

*

SHEET NO.	SHEET DESCRIPTION
ELECTRICAL PLANS	
E0.1	ELECTRICAL COVER SHEET
E0.2	ELECTRICAL ONE-LINE DIAGRAM & SCHEDULES
E0.3	SPORTS LIGHTING DIAGRAM
E1.1	ELECTRICAL DEMO PARTIAL SITE PLAN 1
E1.2	ELECTRICAL DEMO PARTIAL SITE PLAN 2
E2.0	ELECTRICAL OVERALL SITE PLAN
E2.1	ELECTRICAL PARTIAL SITE PLAN 1
E2.2	ELECTRICAL PARTIAL SITE PLAN 2
E2.3	ELECTRICAL ENLARGED PLANS
E3.1	PHOTOMETRIC PARTIAL SITE PLAN 1
E3.2	PHOTOMETRIC PARTIAL SITE PLAN 2
E4.1	ELECTRICAL DETAILS
E4.2	ELECTRICAL DETAILS
E5.1	MUSCO DESIGN DRAWINGS
E5.2	MUSCO DESIGN DRAWINGS
E5.3	MUSCO DESIGN DRAWINGS
E5.4	MUSCO DESIGN DRAWINGS
E6.1	TITLE 24 LTO FORMS
MUSCO SPORTSFIELD LIGHTING PLANS	
MT1	NOTES, FOUNDATION DETAIL
MS1	60B POLE DETAILS
MS2	60A POLE DETAILS
MS3	70A POLE DETAILS
MS4	70C POLE DETAILS
MS5	90A POLE DETAILS
MS6	80B POLE DETAILS
MD1	ATTACHMENT DETAILS
MD2	ATTACHMENT DETAILS
MD3	ATTACHMENT DETAILS
SPORTSFIELD SPECIALTIES DUGOUT STRUCTURE	
SFPC-1	GENERAL NOTES AND DSA FORM 103
SFPC-2	GENERAL NOTES, ABBREVIATIONS AND SYMBOLS
SFPC-3	FOUNDATION, SLAB PLANS AND DETAILS
SFPC-4	ROOF PLANS AND DETAILS
SFPC-5	SECTIONS AND DETAILS
NEVCO SCOREBOARD	
SB0.1	COVER SHEET
SB0.2	STRUCTURAL NOTES & SPECIAL INSPECTIONS
SB0.3	EXAMPLE DSA 103- TESTING AND INSPECTIONS
SB2.2	TWO COLUMN CAISSON - BOLTED
SB5.1	ATTACHMENT DETAILS
SB5.2	OPTIONAL SCOREBOARD FEATURE ATTACHMENT DETAILS

DSA SUPPLEMENTARY CONDITIONS

1. FABRICATION AND INSTALLATION OF DEFERRED SUBMITTAL ITEMS SHALL NOT BE STARTED UNTIL CONTRACTOR'S DRAWINGS, SPECIFICATIONS, AND ENGINEERING CALCULATIONS FOR THE ACTUAL SYSTEMS TO BE INSTALLED HAVE BEEN ACCEPTED AND SIGNED BY THE ARCHITECT OR STRUCTURAL ENGINEER AND APPROVED BY THE DSA. LIST DEFERRED SUBMITTAL ITEMS FOR THIS PROJECT.
2. CHANGES TO THE APPROVED DRAWINGS AND SPECIFICATIONS SHALL BE MADE BY AN ADDENDUM OR A CONSTRUCTION CHANGED DOCUMENT (CCD) APPROVED BY THE DIVISION OF THE STATE ARCHITECT PRIOR TO FABRICATION AND INSTALLATION, AS REQUIRED BY SECTION 4-338, PART 1, TITLE 24, CCR AND DSA IR-6.
3. SUBSTITUTIONS AFFECTING ITEMS REGULATED BY THE DIVISION OF THE STATE ARCHITECT (DSA) REQUIRE DSA APPROVAL AS AN ADDENDUM OR A CONSTRUCTION CHANGE DOCUMENT (CCD). DSA APPROVAL SHALL BE OBTAINED PRIOR TO FABRICATION AND/OR INSTALLATION PER SECTION 4-338, PART 1, TITLE 24, CCR.
4. A "DSA CERTIFIED" PROJECT INSPECTOR EMPLOYED BY THE DISTRICT (OWNER) AND APPROVED BY THE DSA SHALL PROVIDE CONTINUOUS INSPECTION OF THE WORK. THE DUTIES OF THE INSPECTOR ARE DEFINED IN SECTION 4-342, PART 1, TITLE 24, CCR. THE MINIMUM INSPECTOR CLASS REQUIRED IS CLASS 2 PER DSA IR A7.
5. A DSA ACCEPTED TESTING LABORATORY DIRECTLY EMPLOYED BY THE DISTRICT (OWNER) SHALL CONDUCT ALL THE REQUIRED TESTS AND INSPECTIONS FOR THE PROJECT.
6. THE INTENT OF THESE DRAWINGS AND SPECIFICATIONS IS THAT THE WORK OF THE ALTERATION, REHABILITATION OR RECONSTRUCTION IS TO BE IN ACCORDANCE WITH TITLE 24, CCR. SHOULD ANY EXISTING CONDITIONS SUCH AS DETERIORATION OR NON-COMPLYING CONSTRUCTION BE DISCOVERED WHICH IS NOT COVERED BY THE CONTRACT DOCUMENTS WHEREIN THE FINISHED WORK WILL NOT COMPLY WITH TITLE 24, CCR, A CONSTRUCTION CHANGE DOCUMENT (CCD), OR A SEPARATE SET OF PLANS AND SPECIFICATIONS, DETAILING AND SPECIFYING THE REQUIRED WORK SHALL BE SUBMITTED TO AND APPROVED BY DSA BEFORE PROCEEDING WITH THE WORK. (SECTION 4-317(C), PART 1, TITLE 24, CCR)
7. GRADING PLANS, DRAINAGE IMPROVEMENTS, ROAD AND ACCESS REQUIREMENTS AND ENVIRONMENTAL HEALTH CONSIDERATIONS SHALL COMPLY WITH ALL LOCAL ORDINANCES.
8. ALL CONSTRUCTION AND DEMOLITION SHALL BE IN ACCORDANCE WITH CHAPTER 33 OF THE CBC AND CFC, AND THE WRITTEN SITE FIRE SAFETY PLAN.

STATEMENT OF GENERAL CONFORMANCE

APPLICATION NO. 02-123587
FILE NO. 39-H4

THE DRAWINGS IDENTIFIED AS FOLLOWS:

☒ ALL DRAWING SHEETS INCLUDED IN THIS SET NOT BEARING MY STAMP AND SIGNATURE

☒ DRAWING SHEETS DENOTED IN THE SHEET INDEX AS FOLLOWS: *

☒ DRAWING SHEETS INCLUDED UNDER THE FOLLOWING PC APPROVALS: 04-122814; 04-124534;

HAVE BEEN PREPARED BY OTHER DESIGN PROFESSIONALS OR CONSULTANTS WHO ARE LICENSED AND AUTHORIZED TO PREPARE SUCH DRAWINGS (PLANS) IN THIS STATE. THEY HAVE BEEN EXAMINED BY ME FOR:

1. DESIGN INTENT AND APPEAR TO MEET THE APPROPRIATE REQUIREMENTS OF TITLE 24, CALIFORNIA CODE OF REGULATIONS AND THE PROJECT SPECIFICATIONS PREPARED BY ME, AND
2. COORDINATION WITH MY DRAWINGS (PLANS) AND SPECIFICATIONS AND ARE ACCEPTABLE FOR INCORPORATION INTO THE CONSTRUCTION OF THIS PROJECT.

PER TITLE 24, PART 1, SECTION 4-316(b): THE STATEMENT OF GENERAL CONFORMANCE SHALL NOT BE CONSTRUED AS RELIEVING ME OF MY RIGHTS, DUTIES, AND RESPONSIBILITIES UNDER SECTIONS 17302 AND 81138 OF THE EDUCATION CODE AND SECTIONS 4-336, 4-341 AND 4-344 OF TITLE 24, PART 1.

		12-17-2025
SIGNATURE		DATE
TIM D. HYDE	S3260	03-31-2027
PRINTED NAME	LICENSE NUMBER	EXPIRATION DATE

ALL IDEAS, DESIGNS, ARRANGEMENTS, AND PLANS INDICATED OR REPRESENTED BY THIS DRAWING ARE OWNED BY AND THE PROPERTY OF VERDE DESIGN, INC. AND WERE CREATED, EVOLVED, AND DEVELOPED FOR USE ON AND IN CONNECTION WITH THE SPECIFIED PROJECT. NONE OF SUCH IDEAS, DESIGNS, ARRANGEMENTS OR PLANS SHALL BE USED, REPRODUCED, OR PUBLISHED BY ANY METHOD, IN WHOLE OR IN PART, OR DISCLOSED TO ANY PERSON, FIRM, OR CORPORATION FOR ANY PURPOSE WHATSOEVER WITHOUT WRITTEN PERMISSION OF VERDE DESIGN, INC.

PARKING COUNTS PER CBC 11B-208.2

TOTAL (e)	(e) STANDARD	(e) #A	(e) #V	TOTAL ADA STALLS REQUIRED	REQUIRED #V	TOTAL NEW ADA PARKING REQUIRED
282	271	9A	2V	7	2V	0

PROPOSED PARKING (RE-STRIPE OF SOME EXISTING)

TOTAL	STANDARD	#A	#V	TOTAL ADA STALLS REQUIRED	REQUIRED #V	TOTAL NEW ADA PARKING PROVIDED
266	266	10A	3V	7	2V	1A, 1V

ACCESSIBILITY LEGEND

SYM	DESCRIPTION	DTL
G1	6' TALL X 4' WIDE SWING GATE WITH PANIC HARDWARE	A D3.2
G2	7' TALL X 4' WIDE SWING GATE WITH PANIC HARDWARE	B D3.2
G3	7' TALL X 4' WIDE SWING GATE WITH TRANSOM & PANIC HARDWARE	C D3.2
G4	7' TALL X 8' WIDE DOUBLE SWING GATE WITH TRANSOM & PANIC HARDWARE	D D3.2
G5	6' TALL X 12' WIDE DOUBLE SWING GATE	E D3.2
G6	6' TALL X 24' WIDE DOUBLE SWING GATE	F D3.2
G7	EXISTING MAINTENANCE GATE	
G8	EXISTING PEDESTRIAN GATE	

ACCESSIBILITY PLAN NOTES

1. ACCESSIBLE PATH OF TRAVEL AS INDICATED ON PLAN IS A BARRIER-FREE ACCESS ROUTE WITHOUT ANY ABRUPT LEVEL CHANGES EXCEEDING 1/2" BEVELED AT 1:2 MAXIMUM SLOPE, OR VERTICAL LEVEL CHANGES NOT EXCEEDING 1/4" MAXIMUM, AND IS AT LEAST 48" WIDE. SURFACE IS SLIP-RESISTANT, STABLE, FIRM, AND SMOOTH. CROSS SLOPE DOES NOT EXCEED 2%, AND SLOPE IN THE DIRECTION OF TRAVEL IS LESS THAN 5% UNLESS OTHERWISE NOTED. ACCESSIBLE PATH OF TRAVEL SHALL BE MAINTAINED FREE OF OVERHANGING OBSTRUCTIONS TO 80" MINIMUM AND FROM OBJECTS PROTRUDING MORE THAN 4" FROM WALL BETWEEN 27" AND 80" AFF. ARCHITECT SHALL VERIFY THAT THERE ARE NO BARRIERS IN THE PATH OF TRAVEL.
2. CONTRACTOR SHALL VERIFY THAT ALL BARRIERS IN THE PATH OF TRAVEL HAVE BEEN REMOVED, OR WILL BE REMOVED, UNDER THIS PROJECT, AND THAT THE PATH OF TRAVEL COMPLIES WITH CBC SECTION 11B.
3. CONTRACTOR TO ENSURE ACCESS THROUGH CAMPUS BY PROVIDING STRATEGIC CONSTRUCTION FENCING AND TRENCH LIDS AT APPROPRIATE LOCATIONS. VERIFY LOCATIONS WITH OWNER REPRESENTATIVE. SCHEDULE TRENCHING TO BE COMPLETED DURING PERIODS OF LEAST INTERRUPTION FOR CAMPUS USE.
4. THE INTENT OF THE DRAWINGS AND SPECIFICATIONS IS TO MODIFY THE FACILITY FOR ACCESSIBILITY IN ACCORDANCE WITH TITLE 24, CALIFORNIA CODE OF REGULATIONS. SHOULD ANY CONDITIONS DEVELOP THAT ARE NOT COVERED BY THE CONTRACT DOCUMENTS SUCH THAT THE FINISHED WORK WILL NOT COMPLY WITH TITLE 24, A CONSTRUCTION CHANGE DIRECTIVE (CCD) DETAILING AND SPECIFYING THE WORK REQUIRED TO BRING CONDITIONS INTO COMPLIANCE WITH TITLE 24 SHALL BE SUBMITTED TO AND APPROVED BY DSA BEFORE PROCEEDING WITH THE WORK.

DESIGN PROFESSIONAL IN GENERAL RESPONSIBLE CHARGE STATEMENT:
THE POT IDENTIFIED IN THESE CONSTRUCTION DOCUMENTS IS COMPLIANT WITH CURRENT APPLICABLE CALIFORNIA BUILDING CODE ACCESSIBILITY PROVISIONS **FOR PATH OF TRAVEL REQUIREMENTS AND STRUCTURAL REPAIRS.** AS PART OF THE DESIGN OF THIS PROJECT, THE POT WAS EXAMINED AND ANY ELEMENTS, COMPONENTS OR PORTION OF THE POT THAT WERE DETERMINED TO BE NONCOMPLIANT 1) HAVE BEEN IDENTIFIED AND 2) THE CORRECTIVE WORK NECESSARY TO BRING THEM INTO COMPLIANCE HAS BEEN INCLUDED WITHIN THE SCOPE OF THIS PROJECT'S WORK THROUGH DETAILS, DRAWINGS AND SPECIFICATIONS INCORPORATED INTO THESE CONSTRUCTION DOCUMENTS. ANY NONCOMPLIANT ELEMENTS, COMPONENTS OR PORTION OF THE POT THAT WILL NOT BE CORRECTED BY THIS PROJECT BASED ON VALUATION THRESHOLD LIMITATIONS OR A FINDING OF UNREASONABLE HARDSHIP ARE SO INDICATED IN THESE CONSTRUCTION DOCUMENTS.

DURING CONSTRUCTION, IF POT ITEMS WITHIN THE SCOPE OF THE PROJECT REPRESENTED AS CODE COMPLIANT ARE FOUND TO BE NONCONFORMING BEYOND REASONABLE CONSTRUCTION TOLERANCES, THEY SHALL BE BROUGHT INTO COMPLIANCE WITH THE CBC AS PART OF THIS PROJECT BY MEANS OF A "CONSTRUCTION CHANGE DOCUMENT" (FORM **DSA 140**).

ACCESSIBILITY LEGEND

SYM	DESCRIPTION	DTL
▬ ╎╎ ▬	PROJECT LIMIT OF WORK	
⇉	EXISTING PEDESTRIAN ACCESS (02-115633, 110113 & 105134)	
– – →	PROPOSED PEDESTRIAN ACCESS	
DF	PROPOSED DRINKING FOUNTAIN - PEDESTAL	A D1.2
E	EXISTING FIRE HYDRANT	
N	PROPOSED FIRE HYDRANT- SHALL BE PER CITY STANDARDS	
#A	ACCESSIBLE PARKING STALLS (DSA 02-117947). THE IOR SHALL INSPECT AND VERIFY THE EXISTING CONDITIONS ARE COMPLIANT. IF NOT COMPLIANT CONTRACTOR SHALL MAKE CORRECTIONS TO BRING THEM TO CURRENT CODE.	
#V	ACCESSIBLE VAN PARKING STALLS (DSA 02-117947). THE IOR SHALL INSPECT AND VERIFY THE EXISTING CONDITIONS ARE COMPLIANT. IF NOT COMPLIANT CONTRACTOR SHALL MAKE CORRECTIONS TO BRING THEM TO CURRENT CODE.	
#	NUMBER OF EXISTING PARKING STALLS (DSA 02-117947)	
1	EXISTING TOW AWAY SIGN	
2	EXISTING TRUNCATED DOMES	
3	PROPOSED DETECTABLE WARNING	L D2.1
4	ACCESSIBLE PARKING STALL SIGN	G D2.2
5	ACCESSIBLE PARKING STALL SIGN - VAN	H D2.2
6	ADA PARKING STALL	K D2.2
7	EXISTING RESTROOM BUILDING MODIFICATIONS	A D6.1

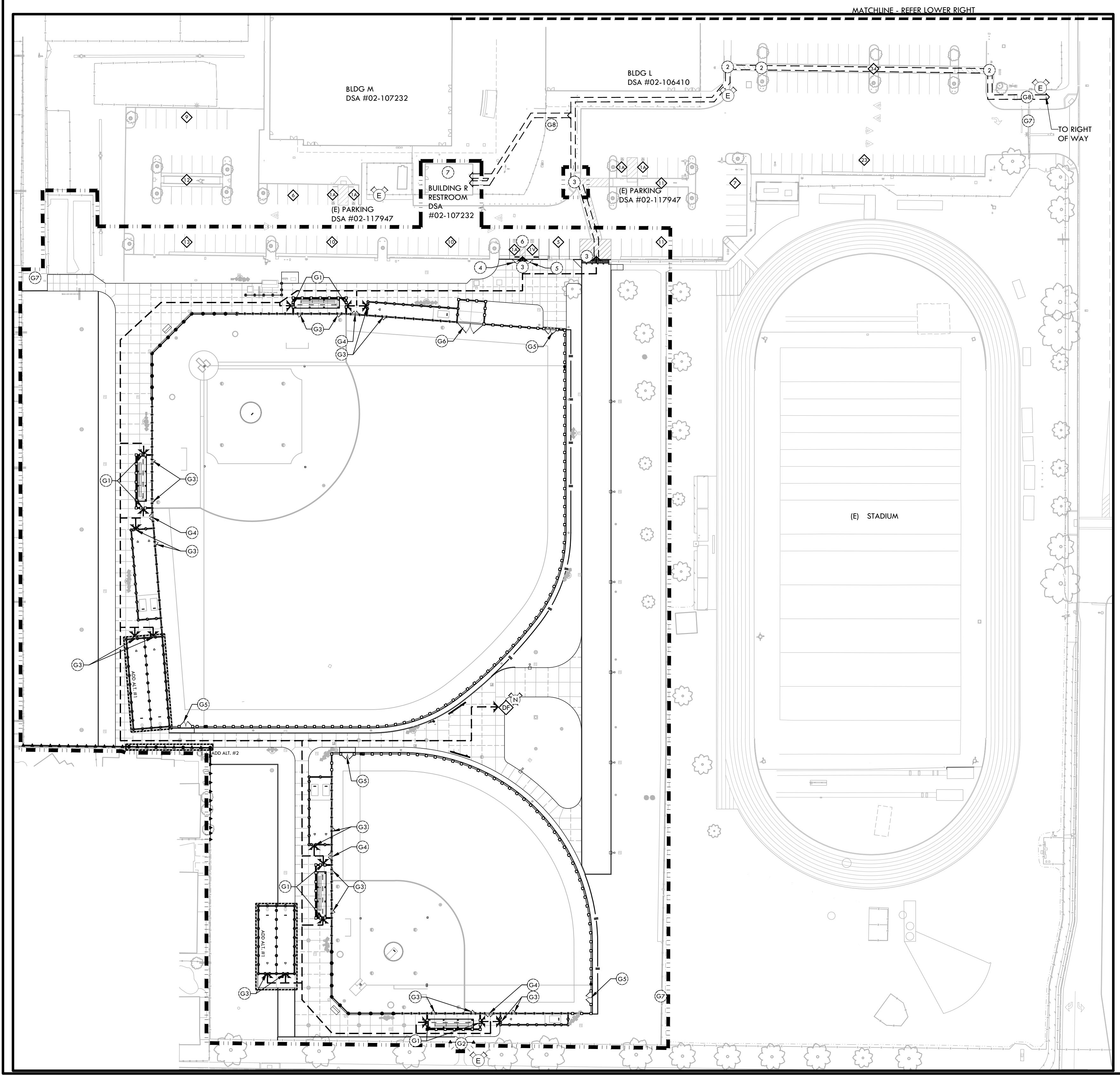

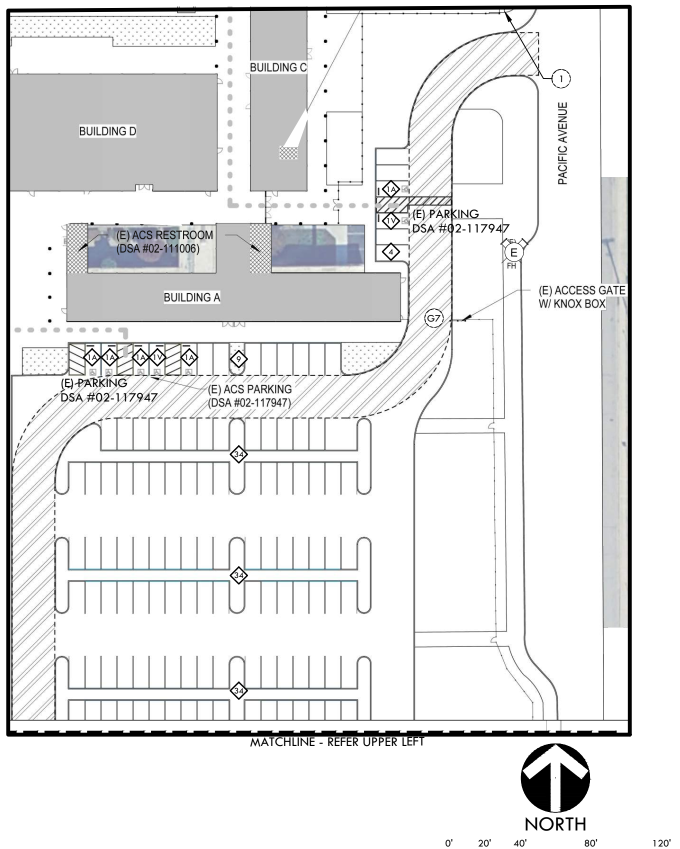

IDENTIFICATION STAMP
DIV. OF THE STATE ARCHITECT
APP: 02-123587 INC:
REVIEWED FOR
SS ☑ FLS ☑ ACS ☑
DATE: 01/16/2026

VERDE DESIGN
LANDSCAPE ARCHITECTURE
CIVIL ENGINEERING
SPORT PLANNING & DESIGN

1843 Iron Point Rd. Suite 140
Folsom, CA 95630
tel: 916.415.6554
fax: 916.415.6525
www.VerdeDesignInc.com

STAMP

REGISTERED LANDSCAPE ARCHITECT
MARK S. BAGINSKI
No. 4039
Signature
EXPIRATION DATE:
JULY 2027
STATE OF CALIFORNIA

CONSULTANT

KEYMAP

SHEET TITLE
ACCESSIBILITY
PLAN

PROJECT NAME
LODI HIGH SCHOOL
ATHLETIC FIELD
IMPROVEMENTS

PROJECT ADDRESS
3 S PACIFIC AVE
LODI, CA
95242

SUBMITTAL	DATE
50% DSA SUBMITTAL	07/31/25
100% DSA SUBMITTAL	09/25/25
DSA BACKCHECK SUBMITTAL	12/17/25
DSA BACKCHECK SUBMITTAL	**01/08/26**

NO.	REVISIONS	DATE
△		
△		
△		
△		
△		
△		

DRAWN BY: HM
CHECKED BY: CS/MB
DATE ISSUED: **01/08/2026**
SCALE: 1"=40'-0"
PROJ. NO.: 2502700
SHEET NO.: L0.1

ALL IDEAS, DESIGNS, ARRANGEMENTS, AND PLANS INDICATED OR REPRESENTED BY THIS DRAWING ARE OWNED BY AND THE PROPERTY OF VERDE DESIGN, INC. AND WERE CREATED, EVOLVED, AND DEVELOPED FOR USE ON AND IN CONNECTION WITH THE SPECIFIED PROJECT. NONE OF SUCH IDEAS, DESIGNS, ARRANGEMENTS OR PLANS SHALL BE USED, REPRODUCED, OR PUBLISHED BY ANY METHOD, IN WHOLE OR IN PART, OR DISCLOSED TO ANY PERSON, FIRM, OR CORPORATION FOR ANY PURPOSE WHATSOEVER WITHOUT WRITTEN PERMISSION OF VERDE DESIGN, INC.

DRAWING NAME: Y:\Projects-FO\2025\2502700 - Lodi HS Baseball and Softball Field\CAD_ACC.dwg
PLOT DATE: 12-11-25 PLOTTED BY: station9

BASEBALL AND SOFTBALL DUGOUT CODE ANALYSIS
OCCUPANCY: A-3
CONSTRUCTION TYPE: V B
FIRE SPRINKLERS: NOT REQUIRED
ROOF COVERING: METAL DECK - CLASS A
OCCUPANT LOAD: 20
EGRESS WIDTH: 48 IN
ALLOWABLE HEIGHT: 40 FT
ALLOWABLE AREA: 6000 SQ. FT., 1 STORY
ACTUAL HEIGHT: 10'-3"
ACTUAL AREA: 658 SQ FT

OCCUPANCY LOAD

CALCULATIONS
(PER CBC 1004.5-6)

AREA OF ASSEMBLY: 22,256 SF
OCCUPANCY LOAD FACTOR: 30 NET

DUGOUT OCCUPANT LOAD: 20

GATE EXIT REQUIREMENTS

VENUE	OCCUPANCY	CALCULATIONS FOR PROPOSED OCCUPANCY USE- ASSEMBLY W/ FIXED SEATS (PER CBC 1004.2.1 & CBC 1005.3.2)	REQUIRED EXIT WIDTH
BASEBALL AREA (INCLUDING DUGOUTS)	60	TOTAL OCCUPANCY LOAD = 60 PEOPLE REQUIRED EXIT WIDTH: 60people(.2") = 12"=1.0'	MIN. 32"
SOFTBALL AREA (INCLUDING DUGOUTS)	60	TOTAL OCCUPANCY LOAD = 60 PEOPLE REQUIRED EXIT WIDTH: 60people(.2") = 12"=1.0'	MIN. 32"
		TOTAL REQUIRED EXIT WIDTH PER FIELD	MIN. 32"
		EXIT WIDTH PROVIDED PER FIELD	96" = 8'

SAFE DISPERSAL AREA

▨	PROPOSED SAFE DISPERSAL AREA	
AREA	OCCUPANCY	CALCULATIONS (PER CBC 1004.2.1)
A SOFTBALL AREA (INCLUDING DUGOUTS)	60	TOTAL OCCUPANCY LOAD = 60 PEOPLE REQUIRED SAFE DISPERSAL AREA: 60 X 5 SQ FT = 300 SQ FT.
B NOT USED		
C BASEBALL AREA (INCLUDING DUGOUTS)	60	TOTAL OCCUPANCY LOAD = 60 PEOPLE REQUIRED SAFE DISPERSAL AREA: 60 X 5 SQ FT = 300 SQ FT.

FIRE, LIFE & SAFETY LEGEND

SYM	DESCRIPTION	
G3	7' TALL X 4' WIDE SWING GATE WITH TRANSOM & PANIC HARDWARE	C / D3.2
G4	7' TALL X 8' WIDE DOUBLE SWING GATE WITH TRANSOM & PANIC HARDWARE	D / D3.2
G5	6' TALL X 12' WIDE DOUBLE SWING GATE	E / D3.2
G6	6' TALL X 24' WIDE DOUBLE SWING GATE	F / D3.2
G7	EXISTING MAINTENANCE GATE	
G8	EXISTING PEDESTRIAN GATE	
1	EXISTING RESTROOM BUILDING MODIFICATIONS	A / D6.1
2	PROVIDE A KNOX KEY BOX AT THE REMOVABLE BOLLARDS THAT IS COMPLIANT WITH THE LODI FIRE DEPARTMENT REQUIREMENTS	

SYM	DESCRIPTION	
━ ╎ ━	PROJECT LIMIT OF WORK	
■	EXISTING FIRE DEPARTMENT ACCESS (02-117947)- ROUTE IS TO BE A MIN 20' WIDE BY 14' VERTICAL CLEARANCE AND RATED 96,000 LBS.	
■	PROPOSED FIRE DEPARTMENT ACCESS - ROUTE IS TO BE A MIN 20' WIDE BY 14' VERTICAL CLEARANCE AND RATED 96,000 LBS.	
- - -	SAFE DISPERSAL ROUTE	
— — —	CURB/ROADWAY SHALL BE PAINTED RED AND CLEARLY MARKED WITH THE WORDS IN WHITE PAINT "FIRE LANE – NO PARKING CVC 22500.1" (REFER ALSO TO SPECIFICATIONS AND DSA PL 07-03 FOR MORE INFORMATION)	N / D2.2
E	EXISTING FIRE HYDRANT	
N	PROPOSED FIRE HYDRANT - SHALL FOLLOW CITY STANDARDS	
G1	6' TALL X 4' WIDE SWING GATE WITH PANIC HARDWARE	A / D3.2
G2	7' TALL X 4' WIDE SWING GATE WITH PANIC HARDWARE	B / D3.2

FIRE/LIFE SAFETY PLAN NOTES

1. THE INTENT OF THE DRAWINGS AND SPECIFICATIONS IS TO MODIFY THE FACILITY FOR ACCESSIBILITY IN ACCORDANCE WITH TITLE 24, CALIFORNIA CODE OF REGULATIONS. SHOULD ANY CONDITIONS DEVELOP THAT ARE NOT COVERED BY THE CONTRACT DOCUMENTS SUCH THAT THE FINISHED WORK WILL NOT COMPLY WITH TITLE 24, A CONSTRUCTION CHANGE DIRECTIVE (CCD) DETAILING AND SPECIFYING THE WORK REQUIRED TO BRING CONDITIONS INTO COMPLIANCE WITH TITLE 24 SHALL BE SUBMITTED TO AND APPROVED BY DSA BEFORE PROCEEDING WITH THE WORK.

NOTE: THIS DRAWING IS FOR AGENCY APPROVAL ONLY - NOT FOR CONSTRUCTION.

LOCAL FIRE AUTHORITY REVIEW

PROJECT INFORMATION

School District/Owner: Lodi Unified School District
Project Name/School: Lodi High School Athletic Field Improvements
Project Address: 3 S Pacific Ave, Lodi, CA 95242

FIRE & LIFE SAFETY INFORMATION

1.	Has a fire hydrant flow test been performed within the past 12 months? *(If yes, provide a copy of the test data.)*	Yes ☐		No ☒
2.	Was the fire hydrant water flow test performed as part of this LFA review?	Yes ☐		No ☒
3.	Is the project located within a designated fire hazard severity zone (FHSZ) as established by Cal-Fire? *(If yes, indicate FHSZ classification below.)*	Yes ☐		No ☒
	Refer to the following website for FHSZ locations: Fire Hazard Severity Zones in State Responsibility Area	Moderate ☐	High ☐	Very High ☐
	Wildland Interface Area (WIFA) *(If any designations are checked, project design must meet the requirements of CBC Chapter 7A.)*			WIFA ☐

CONDITION MEANS AND METHODS RESOLUTION		ALTERNATE ACCEPTED			
		Yes	No	N/A	N/R
4.	Emergency vehicle access roadways do not meet CFC requirements.				
4a.	**Acceptable Alternate:** Emergency vehicle and personnel access as proposed by the project architect is acceptable for providing fire suppression and protection of life and property.	X			
5.	**Fire Hydrants:** Number and spacing does not meet CFC requirements.				
5a.	**Acceptable Alternate:** Number of fire hydrants and spacing as proposed by the project architect is acceptable for fire suppression and protection of life and property.	X			
6.	**Fire Hydrants:** Water flow and pressure are less than CFC minimum.				
6a.	**Acceptable Alternate:** The available flow and pressure is acceptable for providing fire suppression and protection of life and property.	X			
7.	Location of fire department connection(s) serving fire sprinkler systems or standpipe systems does not meet CFC requirements.				X
7a.	**Acceptable Alternate:** The location of fire department connection serving the fire sprinkler system and/or standpipe system is acceptable for providing fire suppression and protection of life and property.				

School District Acceptance of Acceptable Design Alternates

By signing this form, the school district acknowledges and accepts the proposed design as an alternative to California Building Code (CBC) and California Fire Code (CFC) minimum requirements, as indicated by one or more of the conditions indicated at items 4a, 5a, 6a or 7a, for providing fire and life safety protection of life and property.

Accepted by: Joe Patty Title: Director of F/P
Signature: Date: 24 Sept 2025

LOCAL FIRE AUTHORITY (LFA) INFORMATION

LFA Agency Name: Lodi Fire Department
LFA Review Official: Ryan Smart
Title: Fire Marshal Work Phone: 209.333.5553
Work Email: Rsmart@Lodi.gov
LFA Reviewer's Signature: Date: 9/23/2025

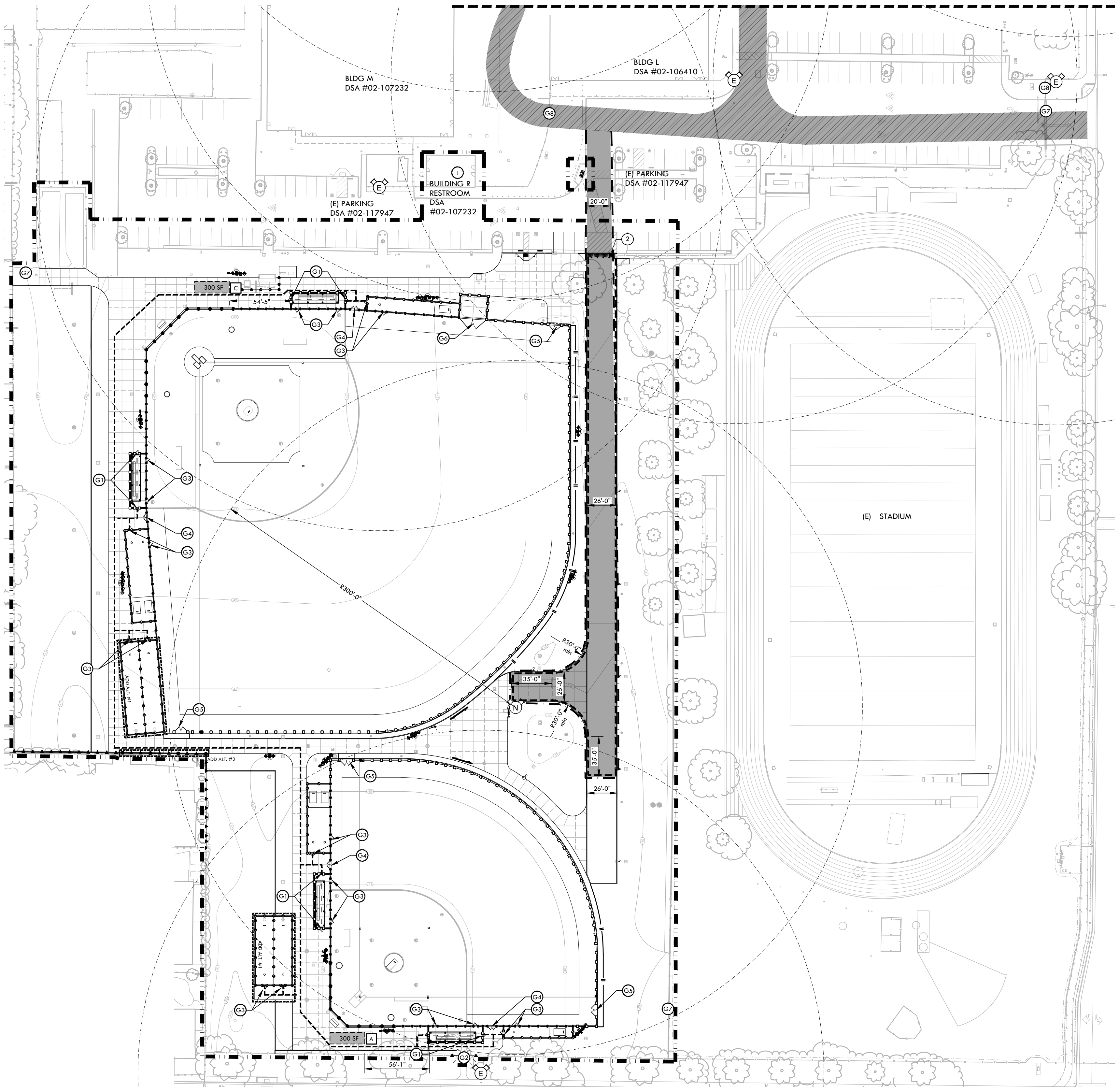

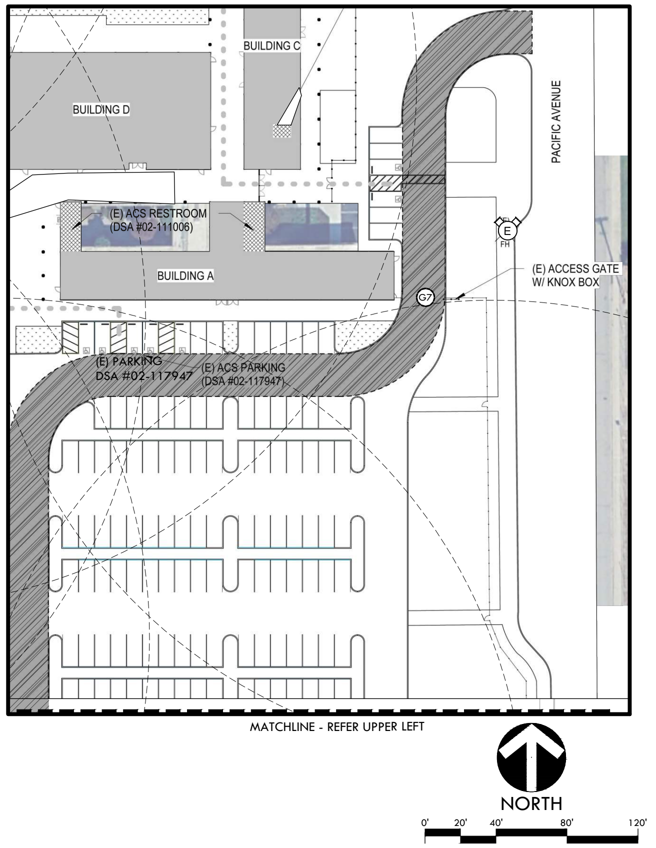

IDENTIFICATION STAMP
DIV. OF THE STATE ARCHITECT
APP: 02-123587 INC:
REVIEWED FOR
SS ☑ FLS ☑ ACS ☑
DATE: 01/16/2026

VERDE DESIGN
LANDSCAPE ARCHITECTURE
CIVIL ENGINEERING
SPORT PLANNING & DESIGN
1843 Iron Point Rd. Suite 140
Folsom, CA 95630
tel: 916.415.6554
fax: 916.415.6525
www.VerdeDesignInc.com

STAMP

MARK S. BAGINSKI
No. 4089
EXPIRATION DATE: JULY 2027

CONSULTANT

KEYMAP

SHEET TITLE
FIRE LIFE SAFETY
PLAN

PROJECT NAME
LODI HIGH SCHOOL
ATHLETIC FIELD
IMPROVEMENTS

PROJECT ADDRESS
3 S PACIFIC AVE
LODI, CA
95242

SUBMITTAL	DATE
50% DSA SUBMITTAL	07/31/25
100% DSA SUBMITTAL	09/25/25
DSA BACKCHECK SUBMITTAL	12/17/25
DSA BACKCHECK SUBMITTAL	01/08/26

NO.	REVISIONS	DATE
△		
△		
△		
△		
△		
△		

DRAWN BY: HM
CHECKED BY: CS/MB
DATE ISSUED: 01/08/2026
SCALE: 1"=40'-0"
PROJ. NO.: 2502700
SHEET NO.: L0.2

FIRE LIFE SAFETY PLAN

ALL IDEAS, DESIGNS, ARRANGEMENTS, AND PLANS INDICATED OR REPRESENTED BY THIS DRAWING ARE OWNED BY AND THE PROPERTY OF VERDE DESIGN, INC. AND WERE CREATED, EVOLVED, AND DEVELOPED FOR USE ON, AND IN CONNECTION WITH THE SPECIFIED PROJECT. NONE OF SUCH IDEAS, DESIGNS, ARRANGEMENTS OR PLANS SHALL BE USED BY, OR DISCLOSED TO ANY PERSON, FIRM, OR CORPORATION FOR ANY PURPOSE WHATSOEVER WITHOUT WRITTEN PERMISSION OF VERDE DESIGN, INC.

DRAWING NAME: Y:\Projects-FO\2025\2502700 - Lodi HS Baseball and Softball Field\CAD_FLS.dwg
PLOT DATE: 12-11-25 PLOTTED BY: station9

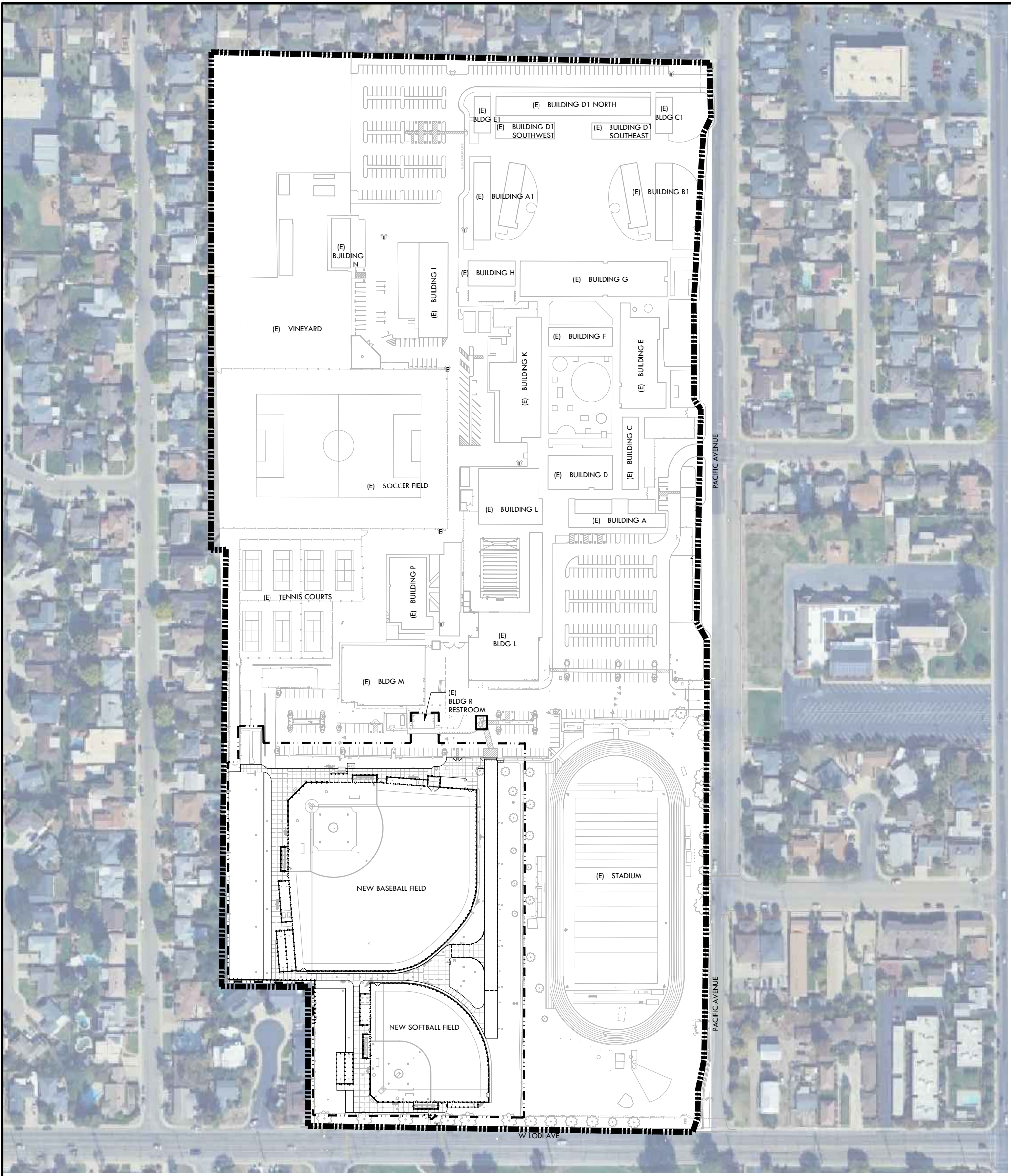
(E) BUILDING D1 NORTH
(E) BLDG E1
(E) BUILDING D1 SOUTHWEST
(E) BUILDING D1 SOUTHEAST
(E) BLDG C1
(E) BUILDING A1
(E) BUILDING B1
(E) BUILDING N
(E) BUILDING I
(E) BUILDING H
(E) BUILDING G
(E) VINEYARD
(E) BUILDING F
(E) BUILDING K
(E) BUILDING E
(E) BUILDING C
(E) SOCCER FIELD
(E) BUILDING D
(E) BUILDING L
(E) BUILDING A
PACIFIC AVENUE
(E) TENNIS COURTS
(E) BUILDING P
(E) BLDG L
(E) BLDG M
(E) BLDG R RESTROOM
NEW BASEBALL FIELD
(E) STADIUM
NEW SOFTBALL FIELD
PACIFIC AVENUE
W LODI AVE

NORTH
0'
40'
80'
160'
240'

SITE PLAN LEGEND

SYM	DESCRIPTION
▬ ▮▮ ▬ ▮▮ ▬	LODI HIGH SCHOOL PROPERTY LINE
▬ ╎╎ ▬ ╎╎ ▬	PROJECT LIMIT OF WORK
BUILDING A ADMINISTRATION	DSA # 02-13335, 02-41543, 02-51357, 02-106410, 02-117947, 02-111006
BUILDING A1 CLASSROOM BUILDING	DSA # 02-117947
BUILDING B1 CLASSROOM BUILDING	DSA #02-117947
BUILDING C ADMINISTRATION	DSA #02-13335, 02-51357, 02-106410
BUILDING C1 CLASSROOM BUILDING	DSA #02-117947
BUILDING A1 CLASSROOM BUILDING	DSA #02-117947
BUILDING E1 CLASSROOM BUILDING	DSA #02-117947
BUILDING D LIBRARY	DSA # 02-13335, 02-51357, 02-106410
BUILDING E CLASSROOM BUILDING	DSA # 02-13335, 02-51357, 02-106410
BUILDING F CLASSROOM BUILDING	DSA # 02-13335, 02-51357, 02-51777, 02-106410
BUILDING G CLASSROOM BUILDING	DSA # 02-13335, 02-23743, 02-51357, 02-51777, 02-106410, 02-112078
BUILDING H CLASSROOM BUILDING	DSA # 02-29780, 02-51357, 02-106410
BUILDING I CLASSROOM BUILDING	DSA # 02-38317, 02-51357, 02-106410
BUILDING K CAFERERIA & MUSIC	DSA # 02-13335, 02-23743, 02-51357, 02-40568, 02-106410, 02-107232, 02-111649
BUILDING L GYMNASIUM & CLASSROOMS	DSA # 02-13335, 02-51357, 02-106410
BUILDING M GYM	02-107232
BUILDING N CLASSROOM BUILDING	02-111006
BUILDING P	02-118537
BUILDING R RESTROOM	02-107232

IDENTIFICATION STAMP
DIV. OF THE STATE ARCHITECT
APP: 02-123587 INC:
REVIEWED FOR
SS ☑ FLS ☑ ACS ☑
DATE: 01/16/2026

VERDE DESIGN
LANDSCAPE ARCHITECTURE
CIVIL ENGINEERING
SPORT PLANNING & DESIGN
1843 Iron Point Rd. Suite 140
Folsom, CA 95630
tel: 916.415.6554
fax: 916.415.6525
www.VerdeDesigninc.com

STAMP

MARK S. BAGINSKI
No. 4089
Signature
EXPIRATION DATE: JULY 2027

CONSULTANT

KEYMAP

SHEET TITLE

SITE
PLAN

PROJECT NAME

LODI HIGH SCHOOL
ATHLETIC FIELD
IMPROVEMENTS

PROJECT ADDRESS

3 S PACIFIC AVE
LODI, CA
95242

SUBMITTAL	DATE
50% DSA SUBMITTAL	07/31/25
100% DSA SUBMITTAL	09/25/25
DSA BACKCHECK SUBMITTAL	12/17/25
DSA BACKCHECK SUBMITTAL	01/08/26

NO.	REVISIONS	DATE
△		
△		
△		
△		
△		
△		

DRAWN BY: AL
CHECKED BY: CS/MB
DATE ISSUED: 01/08/2026
SCALE: 1"=80'-0"
PROJ. NO.: 2502700
SHEET NO.: L0.3

SITE PLAN

ALL IDEAS, DESIGNS, ARRANGEMENTS, AND PLANS INDICATED OR REPRESENTED BY THIS DRAWING ARE OWNED BY AND THE PROPERTY OF VERDE DESIGN, INC. AND WERE CREATED, EVOLVED, AND DEVELOPED FOR USE ON AND IN CONNECTION WITH THE SPECIFIED PROJECT. NONE OF SUCH IDEAS, DESIGNS, ARRANGEMENTS OR PLANS SHALL BE USED, REPRODUCED, OR PUBLISHED BY ANY METHOD, IN WHOLE OR IN PART, OR DISCLOSED TO ANY PERSON, FIRM, OR CORPORATION FOR ANY PURPOSE WHATSOEVER WITHOUT WRITTEN PERMISSION OF VERDE DESIGN, INC.

DRAWING NAME: Y:\Projects-FO\2025\2502700 - Lodi HS Baseball and Softball Field\CAD_Site Plan.dwg
PLOT DATE: 12-15-25 PLOTTED BY: station23

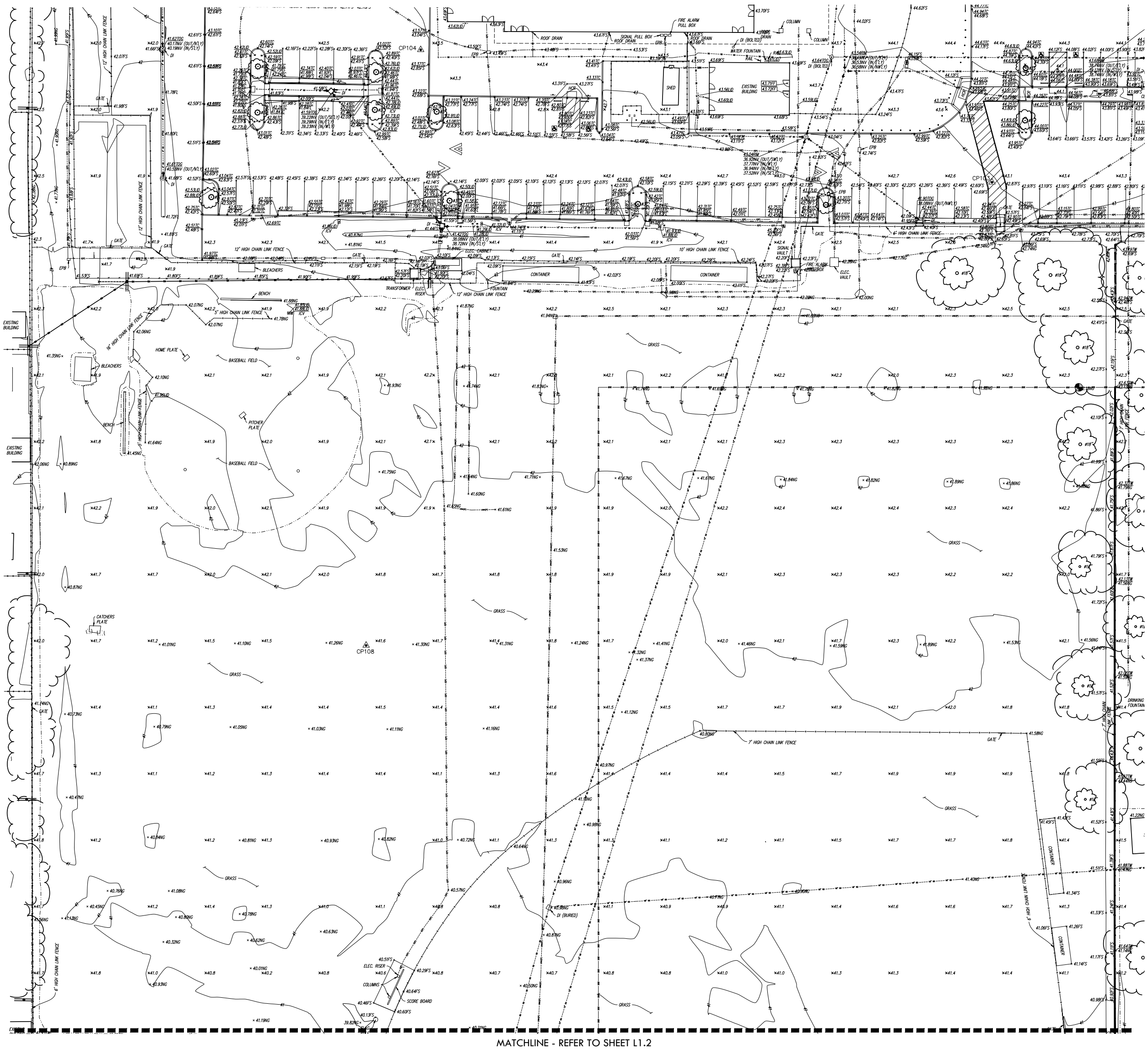
CP104
CP103
CP108
SHED
EXISTING BUILDING
WATER FOUNTAIN
FIRE ALARM PULL BOX
SIGNAL PULL BOX
ROOF DRAIN
COLUMN
DI (BOLTED)
EPB
HCR
TRANSFORMER
ELEC. RISER
ELEC. CABINET
FOUNTAIN
SIGNAL VAULT
FIRE ALARM BOX
ELEC. VAULT
CONTAINER
BLEACHERS
BENCH
HOME PLATE
PITCHER PLATE
CATCHERS PLATE
BASEBALL FIELD
GRASS
GATE
12' HIGH CHAIN LINK FENCE
10' HIGH CHAIN LINK FENCE
16' HIGH CHAIN LINK FENCE
5' HIGH CHAIN LINK FENCE
7' HIGH CHAIN LINK FENCE
6' HIGH CHAIN LINK FENCE
DRINKING FOUNTAIN
DI (BURIED)
COLUMNS
SCORE BOARD
EXISTING BUILDING

MATCHLINE - REFER TO SHEET L1.2

NORTH
0'
10'
20'
40'
60'

EXISTING CONDITIONS LEGEND

▭	ASPHALT PAVEMENT
	BACKFLOW PREVENTER
✦	BUILDING HEIGHT TAKEN AT THIS LOCATION
▨	CONCRETE PAVEMENT
▲	CONTROL POINT
	DOOR
	FIRE HYDRANT
◉	FOUND MONUMENT AS NOTED
ICV	IRRIGATION CONTROL VALVE
	LIGHT STANDARD
●	POWER POLE
S	SEWER MANHOLE
	SIGN
	STAIRS SHOWING DOWNWARD DIRECTION
D	STORM DRAIN MANHOLE
	TRAFFIC LIGHT
T	TELECOM MANHOLE
	TREE (TYPICAL)
×	WATER VALVE
APN	ASSESSOR'S PARCEL NUMBER
CB	CATCH BASIN
℄	CENTERLINE
CD	CURB DRAIN
Ø	DIAMETER OF EXISTING TREE
EC	ELECTRIC CABINET
EPB	ELECTRIC PULL BOX
EV	ELECTRIC VAULT
FS	FINISH SURFACE
FL	FLOW LINE
GPB	GAS PULL BOX
GV	GAS VAULT
HCR	HANDICAP RAMP
INV	INVERT
ICV	IRRIGATION CONTROL VALVE
NG	NATURAL GROUND
TPB	TELCO PULL BOX
TV	TELCO VAULT
TB	TRASH BIN
TW	TOP OF WALL
WM	WATER METER
WPB	WATER PULL BOX
	BLOCK WALL
	CANOPY
	CENTERLINE
	CHAIN LINK FENCE
	CONCRETE/RETAINING WALL
	EASEMENT LINE
E(P)	ELECTRIC LINE (PAINTED)
	FLOW LINE
G(P)	GAS LINE (PAINTED)
	INTERIOR LOT LINE
	OVERHANG
	PROPERTY LINE
	RIGHT-OF-WAY
SS	SANITARY SEWER LINE
SD	STORM DRAIN LINE
T(P)	TELECOM LINE (PAINTED)
UNK(P)	UNKNOWN LINE (PAINTED)
W(P)	WATER LINE (PAINTED)
	WOOD FENCE
	WROUGHT IRON FENCE

CONTROL POINTS

CP#	NORTHING	EASTING	ELEVATION	DESCRIPTION
CP100	2235760.61'	6334152.77'	44.07'	SET MAGNETIC NAIL & TIN
CP101	2234894.11'	6334376.00'	43.54'	SET MAGNETIC NAIL & TIN
CP102	2235808.91'	6334372.66'	44.06'	SET MAGNETIC NAIL & TIN
CP103	2235677.44'	6333914.29'	42.83'	SET MAGNETIC NAIL & TIN
CP104	2235747.25'	6333613.44'	42.88'	SET MAGNETIC NAIL & TIN
CP105	2235381.04'	6334185.68'	42.72'	SET 60D W/ CHASER
CP107	2235826.04'	6333440.59'	42.15'	SET MAGNETIC NAIL & TIN
CP108	2235433.40'	6333584.70'	41.31'	SET 60D W/ CHASER
CP109	2234999.29'	6333583.49'	40.57'	SET 60D W/ CHASER
CP110	2235476.79'	6334019.27'	41.74'	SET 60D W/ TIN
CP111	1980091.63'	6333975.20'	40.34'	SET SCRIBED X

UTILITY STATEMENT

BURIED UTILITIES AND/OR PIPELINES SHOWN HEREON ARE PER VISIBLE AND APPARENT SURFACE EVIDENCE, RECORD DRAWINGS OF THE CONSTRUCTED UTILITY LINES OBTAINED FROM RELIABLE AND RESPONSIBLE SOURCES NOT CONNECTED WITH CALVADA SURVEYING, INC. OR MARKINGS PROVIDED BY AN INDEPENDENT LOCATING CONTRACTOR. NO GUARANTEE OR WARRANTY, EITHER EXPRESSED OR IMPLIED, IS MADE AS TO THE ACCURACY OR THOROUGHNESS OF SUCH INFORMATION. IF MORE ACCURATE LOCATIONS OF UNDERGROUND UTILITIES OR PIPE LINES ARE REQUIRED, THE UTILITY OR PIPELINE WILL HAVE TO BE VERIFIED BY FIELD POTHOLING. CALVADA SURVEYING, INC. AND THE SURVEYOR OF RECORD SHALL NOT BE HELD LIABLE FOR THE LOCATION OF OR THE FAILURE TO NOTE THE LOCATION OF NON-VISIBLE UTILITIES OR PIPELINES.

BASIS OF BEARINGS

THE BASIS OF HORIZONTAL CONTROL FOR THIS PROJECT IS CALIFORNIA COORDINATE SYSTEM NAD83 ZONE 3, (2010.00) DETERMINED LOCALLY BY THE FOLLOWING N.G.S. CONTINUOUS OPERATING REFERENCE STATIONS (C.O.R.S.):

N.G.S.C.O.R.S. P256:
NORTHING = 2163691.37' EASTING = 6243030.72'

N.G.S.C.O.R.S. P268:
NORTHING = 2361036.15' EASTING = ,6233457.67'

BENCHMARK

ELEVATIONS SHOWN HEREON ARE BASED UPON CITY OF LODI BENCHMARK NO. 268, ELEVATION 41.30 FEET (NAVD 88).

DESCRIPTION:
12.5' W/ CHAIN LINK FENCE SEPARATING TRACK AND BASEBALL FIELDS OF LODI HIGH SCHOOL, TOC.

IDENTIFICATION STAMP
DIV. OF THE STATE ARCHITECT
APP: 02-123587 INC:
REVIEWED FOR
SS ☑ FLS ☑ ACS ☑
DATE: 01/16/2026

VERDE DESIGN
LANDSCAPE ARCHITECTURE
CIVIL ENGINEERING
SPORT PLANNING & DESIGN
1843 Iron Point Rd. Suite 140
Folsom, CA 95630
tel: 916.415.6554
fax: 916.415.6525
www.VerdeDesigninc.com

STAMP
LICENSED LAND SURVEYOR
Armando D. DuPont
L.S. 7780
12/02/2025
STATE OF CALIFORNIA

CONSULTANT
CAL VADA SURVEYING, INC.
411 Jenks Circle, Suite 205, Corona, CA 92878
Phone: 951-280-9960 Fax: 951-280-9746
Toll Free: 800-CALVADA www.calvada.com
EST. 1989

KEYMAP

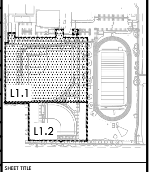

SHEET TITLE
EXISTING CONDITIONS
AND SURVEY PLAN -
BASEBALL FIELD

PROJECT NAME
LODI HIGH SCHOOL
ATHLETIC FIELD
IMPROVEMENTS

PROJECT ADDRESS
3 S PACIFIC AVE
LODI, CA
95242

SUBMITTAL	DATE
50% DSA SUBMITTAL	07/31/25
100% DSA SUBMITTAL	09/25/25
DSA BACKCHECK SUBMITTAL	12/17/25
DSA BACKCHECK SUBMITTAL	01/08/26

NO.	REVISIONS	DATE
△		
△		
△		
△		
△		
△		

DRAWN BY: CAL VADA
CHECKED BY: CS/MB
DATE ISSUED: 01/08/2026
SCALE: 1" = 20'-0"
PROJ. NO.: 2502700
SHEET NO.: L1.1

ALL IDEAS, DESIGNS, ARRANGEMENTS, AND PLANS INDICATED OR REPRESENTED BY THIS DRAWING ARE OWNED BY AND THE PROPERTY OF VERDE DESIGN, INC. AND WERE CREATED, EVOLVED, AND DEVELOPED FOR USE ON AND IN CONNECTION WITH THE SPECIFIED PROJECT. NONE OF SUCH IDEAS, DESIGNS, ARRANGEMENTS OR PLANS SHALL BE USED, REPRODUCED, OR PUBLISHED BY ANY METHOD, IN WHOLE OR IN PART, OR DISCLOSED TO ANY PERSON, FIRM, OR CORPORATION FOR ANY PURPOSE WHATSOEVER WITHOUT WRITTEN PERMISSION OF VERDE DESIGN, INC.

ALL IDEAS, DESIGNS, ARRANGEMENTS, AND PLANS INDICATED OR REPRESENTED BY THIS DRAWING ARE OWNED BY AND THE PROPERTY OF VERDE DESIGN, INC. AND WERE CREATED, EVOLVED, AND DEVELOPED FOR USE ON AND IN CONNECTION WITH THE SPECIFIED PROJECT. NONE OF SUCH IDEAS, DESIGNS, ARRANGEMENTS OR PLANS SHALL BE USED, REPRODUCED, OR PUBLISHED BY ANY METHOD, IN WHOLE OR IN PART, OR DISCLOSED TO ANY PERSON, FIRM, OR CORPORATION FOR ANY PURPOSE WHATSOEVER WITHOUT WRITTEN PERMISSION OF VERDE DESIGN, INC.

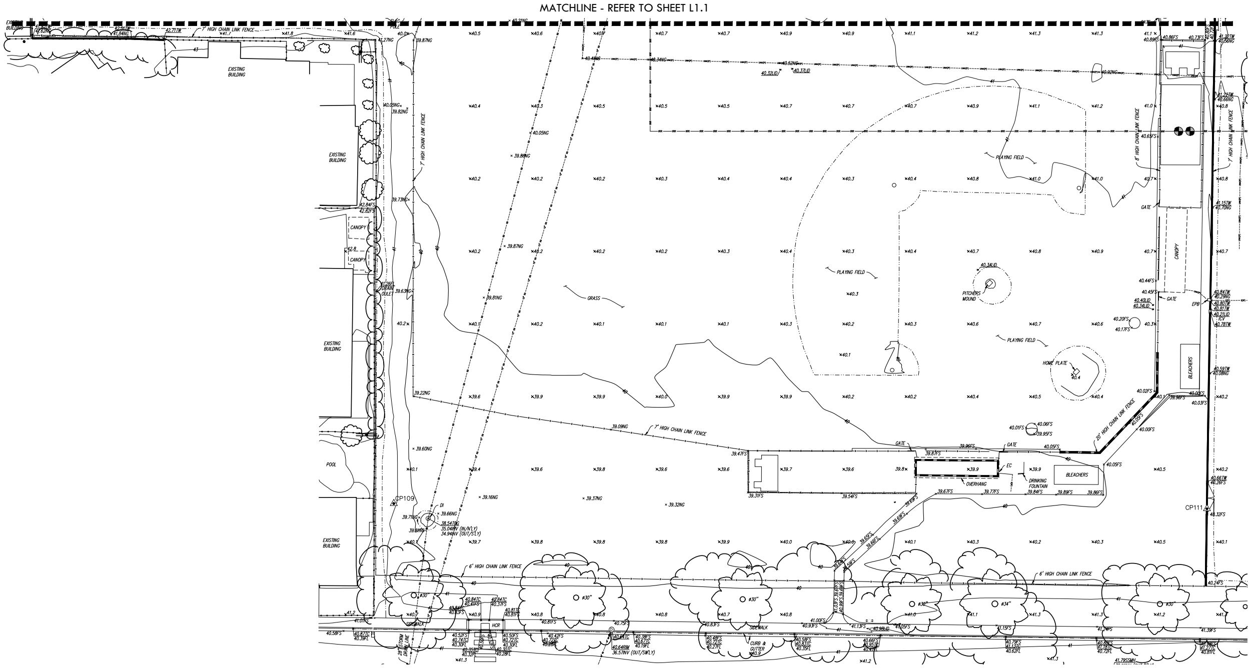
MATCHLINE - REFER TO SHEET L1.1
EXISTING BUILDING
EXISTING BUILDING
EXISTING BUILDING
EXISTING BUILDING
EXISTING BUILDING
FLAG POLE
7' HIGH CHAIN LINK FENCE
7' HIGH CHAIN LINK FENCE
7' HIGH CHAIN LINK FENCE
8' HIGH CHAIN LINK FENCE
7' HIGH CHAIN LINK FENCE
20' HIGH CHAIN LINK FENCE
6' HIGH CHAIN LINK FENCE
6' HIGH CHAIN LINK FENCE
CANOPY
CANOPY
CANOPY
42.84FS
42.82FS
41.26FL DRAIN OULET
39.63NG
39.73NG
40.05NG
39.82NG
41.27NG
39.87NG
40.21NG
40.41NG
40.34NG
40.52NG
40.32LID
40.37LID
40.92NG
40.05NG
39.86NG
39.87NG
39.81NG
GRASS
PLAYING FIELD
PLAYING FIELD
PLAYING FIELD
PITCHERS MOUND
40.34LID
HOME PLATE
40.4
GATE
GATE
GATE
GATE
EPB
ICV
BLEACHERS
BLEACHERS
40.86FS
40.73FS
40.89FS
41.22TW
40.56NG
41.22TW
40.66NG
41.15TW
40.70NG
40.84TW
40.29NG
40.80TW
40.81TW
40.21LID
40.78TW
40.59TW
40.08NG
40.44FS
40.45FS
40.40LID
40.34LID
40.20FS
40.17FS
40.02FS
39.96FS
40.00FS
40.03FS
39.22NG
39.09NG
39.60NG
39.47FS
39.31FS
39.54FS
39.87FS
39.96FS
40.05FS
40.01FS
40.06FS
39.95FS
40.05FS
40.00FS
EC
OVERHANG
DRINKING FOUNTAIN
39.67FS
39.77FS
39.84FS
39.89FS
39.86FS
39.16NG
39.37NG
39.32NG
POOL
CP109
DI
39.71NG
39.66NG
38.54TOG
35.04INV (IN/N'LY)
34.94INV (OUT/S'LY)
39.81NG
CP111
40.32FS
40.66TW
40.26FS
40.24FS
Ø30"
Ø30"
Ø30"
Ø30"
Ø34"
Ø30"
SIDEWALK
SIDEWALK
HCR
CURB & GUTTER
28" STORM DRAIN LINE
40.64RIM
36.57INV (OUT/SW'LY)
41.79SSMH
40.58FS
40.87TC
40.39FL
41.01FS

NORTH
0'
10'
20'
40'
60'

EXISTING CONDITIONS LEGEND

▭	ASPHALT PAVEMENT
⊗	BACKFLOW PREVENTER
✦	BUILDING HEIGHT TAKEN AT THIS LOCATION
▨	CONCRETE PAVEMENT
▲	CONTROL POINT
◺	DOOR
▷◁	FIRE HYDRANT
◉	FOUND MONUMENT AS NOTED
ICV	IRRIGATION CONTROL VALVE
●▭	LIGHT STANDARD
●	POWER POLE
S	SEWER MANHOLE
—○—	SIGN
▥	STAIRS SHOWING DOWNWARD DIRECTION
Ⓓ	STORM DRAIN MANHOLE
●	TRAFFIC LIGHT
Ⓣ	TELECOM MANHOLE
✿	TREE (TYPICAL)
×	WATER VALVE
APN	ASSESSOR'S PARCEL NUMBER
CB	CATCH BASIN
℄	CENTERLINE
CD	CURB DRAIN
Ø	DIAMETER OF EXISTING TREE
EC	ELECTRIC CABINET
EPB	ELECTRIC PULL BOX
EV	ELECTRIC VAULT
FS	FINISH SURFACE
FL	FLOW LINE
GPB	GAS PULL BOX
GV	GAS VAULT
HCR	HANDICAP RAMP
INV	INVERT
ICV	IRRIGATION CONTROL VALVE
NG	NATURAL GROUND
TPB	TELCO PULL BOX
TV	TELCO VAULT
TB	TRASH BIN
TW	TOP OF WALL
WM	WATER METER
WPB	WATER PULL BOX
═	BLOCK WALL
– – –	CANOPY
— - —	CENTERLINE
—x—x—	CHAIN LINK FENCE
═	CONCRETE/RETAINING WALL
━━━	EASEMENT LINE
— E(P) —	ELECTRIC LINE (PAINTED)
— ·· —	FLOW LINE
— G(P) —	GAS LINE (PAINTED)
– – –	INTERIOR LOT LINE
- - -	OVERHANG
——	PROPERTY LINE
— — —	RIGHT-OF-WAY
— SS —	SANITARY SEWER LINE
—SD—	STORM DRAIN LINE
— T(P) —	TELECOM LINE (PAINTED)
— UNK(P) —	UNKNOWN LINE (PAINTED)
— W(P) —	WATER LINE (PAINTED)
—□—□—	WOOD FENCE
—•—•—	WROUGHT IRON FENCE

CONTROL POINTS

CP#	NORTHING	EASTING	ELEVATION	DESCRIPTION
CP100	2235760.61'	6334152.77'	44.07'	SET MAGNETIC NAIL & TIN
CP101	2234894.11'	6334376.00'	43.54'	SET MAGNETIC NAIL & TIN
CP102	2235808.91'	6334372.66'	44.06'	SET MAGNETIC NAIL & TIN
CP103	2235677.44'	6333914.29'	42.83'	SET MAGNETIC NAIL & TIN
CP104	2235747.25'	6333613.44'	42.88'	SET MAGNETIC NAIL & TIN
CP105	2235381.04'	6334185.68'	42.72'	SET 60D W/ CHASER
CP107	2235826.04'	6333440.59'	42.15'	SET MAGNETIC NAIL & TIN
CP108	2235433.40'	6333584.70'	41.31'	SET 60D W/ CHASER
CP109	2234999.29'	6333583.49'	40.57'	SET 60D W/ CHASER
CP110	2235476.79'	6334019.27'	41.74'	SET 60D W/ TIN
CP111	1980091.63'	6333975.20'	40.34'	SET SCRIBED X

UTILITY STATEMENT

BURIED UTILITIES AND/OR PIPELINES SHOWN HEREON ARE PER VISIBLE AND APPARENT SURFACE EVIDENCE, RECORD DRAWINGS OF THE CONSTRUCTED UTILITY LINES OBTAINED FROM RELIABLE AND RESPONSIBLE SOURCES NOT CONNECTED WITH CALVADA SURVEYING, INC. OR MARKINGS PROVIDED BY AN INDEPENDENT LOCATING CONTRACTOR. NO GUARANTEE OR WARRANTY, EITHER EXPRESSED OR IMPLIED, IS MADE AS TO THE ACCURACY OR THOROUGHNESS OF SUCH INFORMATION. IF MORE ACCURATE LOCATIONS OF UNDERGROUND UTILITIES OR PIPE LINES ARE REQUIRED, THE UTILITY OR PIPELINE WILL HAVE TO BE VERIFIED BY FIELD POTHOLING. CALVADA SURVEYING, INC. AND THE SURVEYOR OF RECORD SHALL NOT BE HELD LIABLE FOR THE LOCATION OF OR THE FAILURE TO NOTE THE LOCATION OF NON-VISIBLE UTILITIES OR PIPELINES.

BASIS OF BEARINGS

THE BASIS OF HORIZONTAL CONTROL FOR THIS PROJECT IS CALIFORNIA COORDINATE SYSTEM NAD83 ZONE 3, (2010.00) DETERMINED LOCALLY BY THE FOLLOWING N.G.S. CONTINUOUS OPERATING REFERENCE STATIONS (C.O.R.S.):

N.G.S.C.O.R.S. P256:
NORTHING = 2163691.37' EASTING = 6243030.72'

N.G.S.C.O.R.S. P268:
NORTHING = 2361036.15' EASTING = ,6233457.67'

BENCHMARK

ELEVATIONS SHOWN HEREON ARE BASED UPON CITY OF LODI BENCHMARK NO. 268, ELEVATION 41.30 FEET (NAVD 88).

DESCRIPTION:
12.5' W/ CHAIN LINK FENCE SEPARATING TRACK AND BASEBALL FIELDS OF LODI HIGH SCHOOL, TOC.

IDENTIFICATION STAMP
DIV. OF THE STATE ARCHITECT
APP: 02-123587 INC:
REVIEWED FOR
SS ☑ FLS ☑ ACS ☑
DATE: 01/16/2026

VERDE DESIGN
LANDSCAPE ARCHITECTURE
CIVIL ENGINEERING
SPORT PLANNING & DESIGN
1843 Iron Point Rd. Suite 140
Folsom, CA 95630
tel: 916.415.6554
fax: 916.415.6525
www.VerdeDesigninc.com

STAMP

LICENSED LAND SURVEYOR
Armando D. DuPont
L.S. 7780
12/02/2025
STATE OF CALIFORNIA

CONSULTANT

CALVADA SURVEYING, INC.
411 Jenks Circle, Suite 205, Corona, CA 92878
Phone: 951-280-9960 Fax: 951-280-9746
Toll Free: 800-CALVADA www.calvada.com
EST. 1989

KEYMAP

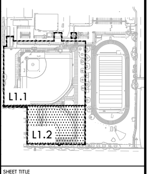

SHEET TITLE
EXISTING CONDITIONS AND SURVEY PLAN - SOFTBALL FIELD

PROJECT NAME
LODI HIGH SCHOOL ATHLETIC FIELD IMPROVEMENTS

PROJECT ADDRESS
3 S PACIFIC AVE
LODI, CA
95242

SUBMITTAL	DATE
50% DSA SUBMITTAL	07/31/25
100% DSA SUBMITTAL	09/25/25
DSA BACKCHECK SUBMITTAL	12/17/25
DSA BACKCHECK SUBMITTAL	01/08/26

NO.	REVISIONS	DATE
△		
△		
△		
△		
△		
△		

DRAWN BY CALVADA	CHECKED BY CS/MB
DATE ISSUED 01/08/2026	SCALE 1" = 20'-0"
PROJ. NO. 2502700	
SHEET NO. L1.2	

EXISTING CONDITIONS AND SURVEY PLAN - SOFTBALL FIELD

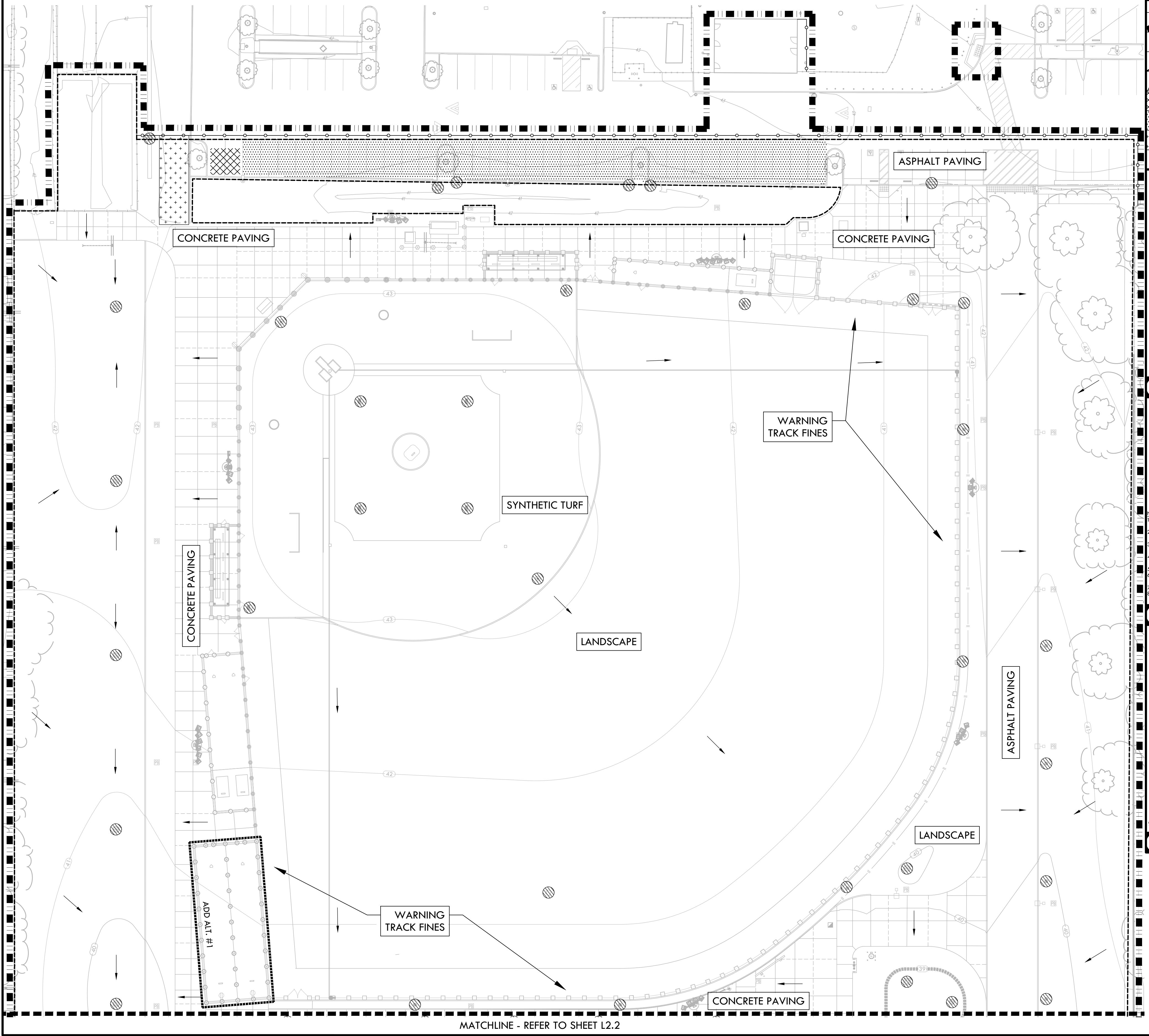
CONCRETE PAVING
CONCRETE PAVING
ASPHALT PAVING
WARNING TRACK FINES
SYNTHETIC TURF
LANDSCAPE
CONCRETE PAVING
ASPHALT PAVING
LANDSCAPE
ADD ALT. #1
WARNING TRACK FINES
CONCRETE PAVING
MATCHLINE - REFER TO SHEET L2.2

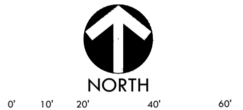
NORTH
0'
10'
20'
40'
60'

EROSION AND SEDIMENT CONTROL NOTES

1. EROSION AND SEDIMENT CONTROL SHALL BE CONSTRUCTED DURING FIRST WEEK OF CONSTRUCTION.
2. EROSION AND SEDIMENT CONTROL SHALL REMAIN THROUGHOUT CONSTRUCTION AND BE REMOVED AND DISPOSED OF DURING MAINTENANCE PERIOD.
3. EROSION AND SEDIMENT CONTROL MAY BE ADJUSTED THROUGH CONSTRUCTION WITH APPROVAL OR AS DIRECTED BY OWNER'S REPRESENTATIVE.
4. CONTRACTOR SHALL SWEEP STREETS AND PARKING AREAS AFFECTED BY CONSTRUCTION WITH STREET SWEEPER AS REQUIRED TO KEEP PAVING CLEAN OF CONSTRUCTION DEBRIS.

EROSION AND SEDIMENT CONTROL LEGEND

SYM	DESCRIPTION	DTL REF
▬ ▬	LIMIT OF WORK	
⊘	STORM DRAIN INLET FILTER FOR EXISTING AND PROPOSED STORM DRAINS	A L2.1
- - -	SEDIMENT RETENTION FIBER ROLL	B L2.1
○—○	TEMPORARY CONSTRUCTION FENCING	
▩	TEMPORARY CONCRETE WASHOUT FACILITY - PROVIDE A WASHOUT BIN FOR CONSTRUCTION WASHOUT AND REMOVE AT END OF CONSTRUCTION.	C L2.1
⁚	CONSTRUCTION STAGING AREA	
+ +	CONSTRUCTION ENTRY	D L2.2
→	DIRECTION OF SURFACE FLOW	

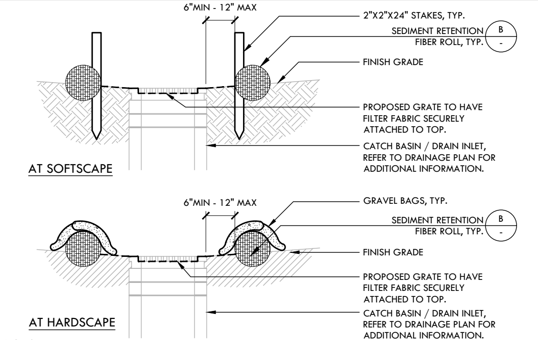
6"MIN - 12" MAX
2"X2"X24" STAKES, TYP.
SEDIMENT RETENTION FIBER ROLL, TYP.
B
-
FINISH GRADE
PROPOSED GRATE TO HAVE FILTER FABRIC SECURELY ATTACHED TO TOP.
CATCH BASIN / DRAIN INLET, REFER TO DRAINAGE PLAN FOR ADDITIONAL INFORMATION.
AT SOFTSCAPE
6"MIN - 12" MAX
GRAVEL BAGS, TYP.
SEDIMENT RETENTION FIBER ROLL, TYP.
B
-
FINISH GRADE
PROPOSED GRATE TO HAVE FILTER FABRIC SECURELY ATTACHED TO TOP.
CATCH BASIN / DRAIN INLET, REFER TO DRAINAGE PLAN FOR ADDITIONAL INFORMATION.
AT HARDSCAPE

NOTES:
1. FILTER FABRIC TO BE SECURELY ATTACHED TO DRAINAGE STRUCTURE TOP AND PERIMETER WADDLE.
2. CONTRACTOR TO CONFORM TO SEDIMENT RETENTION FIBER ROLL NOTES PROVIDED IN DETAIL B, THIS SHEET.

A STORM DRAIN INLET FILTER FOR EXISTING AND PROPOSED STORM DRAINS NTS

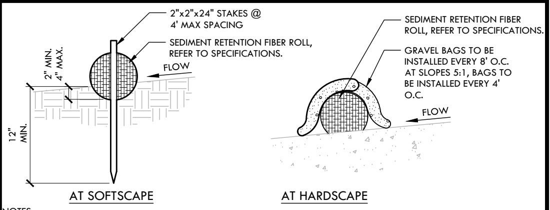
2"x2"x24" STAKES @ 4' MAX SPACING
SEDIMENT RETENTION FIBER ROLL, REFER TO SPECIFICATIONS.
FLOW
2" MIN. 4" MAX.
12" MIN.
AT SOFTSCAPE
SEDIMENT RETENTION FIBER ROLL, REFER TO SPECIFICATIONS.
GRAVEL BAGS TO BE INSTALLED EVERY 8' O.C. AT SLOPES 5:1, BAGS TO BE INSTALLED EVERY 4' O.C.
FLOW
AT HARDSCAPE

NOTES:
1. INSTALL SEDIMENT RETENTION FIBER ROLLS (FIBER ROLLS / WATTLES) AS LOCATED ON PLANS AND AS REQUIRED PER THE STATE GENERAL PERMIT FOR STORMWATER DISCHARGE.
2. FIBER ROLLS SHALL BE CONSTRUCTED LONG ENOUGH TO EXTEND ACROSS FLOW PATH OF POTENTIAL RUN-OFF AND RUN-ON.
3. PREPARE GRADES REMOVING SURFACE DEVIATIONS, LARGE STONES OR DEBRIS THAT WILL INHIBIT CONTINUOUS CONTACT OF THE FIBER ROLL WITH THE GRADE.
4. PRIOR TO FILTER ROLL INSTALLATION EXCAVATE A CONCAVE TRENCH 2" MIN., 4" MAX. DEEP ALONG THE PROPOSED FIBER ROLL LOCATION.
5. INSTALL FIBER ROLLS WITH CONTINUOUS CONTACT OF THE BOTTOM OF THE EXCAVATED TRENCH.
6. STAKE ROLL ON BOTH SIDES 2' FROM OF ENDS AND AT 4' MAXIMUM SPACING WITH 2"X2"X24" STAKES. DRIVE STAKES IN ON ALTERNATING SIDES OF THE ROLL AND OVERLAP ABUTTING ROLL ENDS 12" MIN.
7. BACKFILLED BOTH SIDES TO WATTLE AND TAMP SOIL TO FIRM AND STABLE.
8. CONTRACTOR SHALL MAKE WEEKLY INSPECTIONS OR AS INDICATED IN STORMWATER POLLUTION PREVENTION PLAN, OR THE STATE GENERAL PERMIT FOR STORMWATER DISCHARGE.

B SEDIMENT RETENTION FIBER ROLL NTS

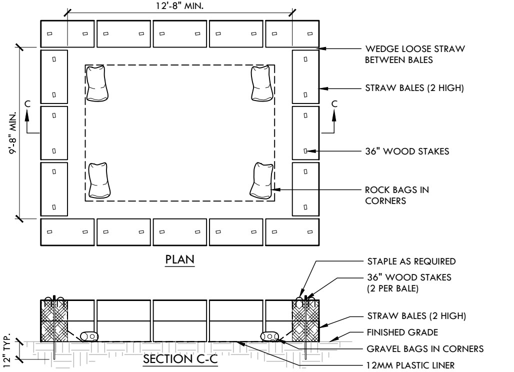
12'-8" MIN.
9'-8" MIN.
C
C
WEDGE LOOSE STRAW BETWEEN BALES
STRAW BALES (2 HIGH)
36" WOOD STAKES
ROCK BAGS IN CORNERS
PLAN
STAPLE AS REQUIRED
36" WOOD STAKES (2 PER BALE)
STRAW BALES (2 HIGH)
FINISHED GRADE
GRAVEL BAGS IN CORNERS
12MM PLASTIC LINER
12" TYP.
SECTION C-C

C TEMPORARY CONCRETE WASHOUT FACILITY

IDENTIFICATION STAMP
DIV. OF THE STATE ARCHITECT
APP: 02-123587 INC:
REVIEWED FOR
SS ☑ FLS ☑ ACS ☑
DATE: 01/16/2026

VERDE DESIGN
LANDSCAPE ARCHITECTURE
CIVIL ENGINEERING
SPORT PLANNING & DESIGN
1843 Iron Point Rd. Suite 140
Folsom, CA 95630
tel: 916.415.6554
fax: 916.415.6525
www.VerdeDesignInc.com

STAMP

REGISTERED LANDSCAPE ARCHITECT
MARK S. BAGINSKI
No. 4089
Signature
EXPIRATION DATE: JULY 2027
STATE OF CALIFORNIA

CONSULTANT

KEYMAP

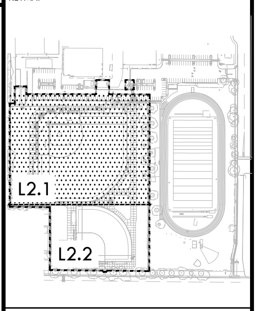

SHEET TITLE
EROSION AND SEDIMENT CONTROL PLAN - BASEBALL FIELD

PROJECT NAME
LODI HIGH SCHOOL ATHLETIC FIELD IMPROVEMENTS

PROJECT ADDRESS
3 S PACIFIC AVE
LODI, CA
95242

SUBMITTAL	DATE
50% DSA SUBMITTAL	07/31/25
100% DSA SUBMITTAL	09/25/25
DSA BACKCHECK SUBMITTAL	12/17/25
DSA BACKCHECK SUBMITTAL	01/08/26

NO.	REVISIONS	DATE
△		
△		
△		
△		
△		
△		

DRAWN BY HM	CHECKED BY CS/MB
DATE ISSUED 01/08/2026	SCALE 1" = 20'-0"

PROJ. NO.
2502700

SHEET NO.
L2.1

EROSION AND SEDIMENT CONTROL PLAN - BASEBALL FIELD

ALL IDEAS, DESIGNS, ARRANGEMENTS, AND PLANS INDICATED OR REPRESENTED BY THIS DRAWING ARE OWNED BY AND THE PROPERTY OF VERDE DESIGN, INC. AND WERE CREATED, EVOLVED, AND DEVELOPED FOR USE ON AND IN CONNECTION WITH THE SPECIFIED PROJECT. NONE OF SUCH IDEAS, DESIGNS, ARRANGEMENTS OR PLANS SHALL BE USED, REPRODUCED, OR PUBLISHED BY ANY METHOD, IN WHOLE OR IN PART, OR DISCLOSED TO ANY PERSON, FIRM, OR CORPORATION FOR ANY PURPOSE WHATSOEVER WITHOUT WRITTEN PERMISSION OF VERDE DESIGN, INC.

DRAWING NAME: Y:\Projects-FO\2025\2502700 - Lodi HS Baseball and Softball Field\CAD_SWP.dwg
PLOT DATE: 12-11-25 PLOTTED BY: station9

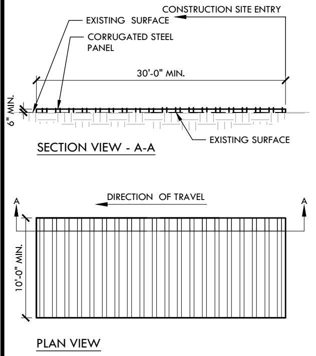

NOTES:

1. CONSTRUCTION SITE ACCESS SHALL BE CONSTRUCTED OF CORRUGATED STEEL "RUMBLE" PLATES WITH RIDGES FOR VIBRATION/DUST CONTROL ON HARDSCAPE SURFACE.
2. LENGTH OF ENTRANCE SHALL BE A MINIMUM OF 30 FEET. WIDTH SHALL BE A MIN. OF 15' OR GREATER IF NECESSARY TO COVER ALL VEHICULAR INGRESS AND EGRESS. PROVIDE AMPLE TURNING RADII.
3. CONTRACTOR SHALL UNDERLAY STEEL "RUMBLE" PLATES AS NECESSARY TO PROTECT EXISTING PAVING AND SPAN CURB HEIGHT.
4. THE ENTRANCE SHALL BE KEPT IN GOOD CONDITION BY OCCASIONAL RINSING.
5. ACCESSES SHALL BE INSPECTED WEEKLY DURING PERIODS OF HEAVY USAGE, MONTHLY DURING NORMAL USAGE, AND AFTER EACH RAINFALL, WITH MAINTENANCE PROVIDED AS NECESSARY.
6. TEMPORARY ACCESS RUMBLE PLATES SHALL BE REMOVED AT THE END OF THE PROJECT. AFFECTED AREA SHALL BE RETURNED TO AS WAS OR BETTER CONDITION.

D CONSTRUCTION ENTRY NTS

EROSION AND SEDIMENT CONTROL NOTES

1. EROSION AND SEDIMENT CONTROL SHALL BE CONSTRUCTED DURING FIRST WEEK OF CONSTRUCTION.
2. EROSION AND SEDIMENT CONTROL SHALL REMAIN THROUGHOUT CONSTRUCTION AND BE REMOVED AND DISPOSED OF DURING MAINTENANCE PERIOD.
3. EROSION AND SEDIMENT CONTROL MAY BE ADJUSTED THROUGH CONSTRUCTION WITH APPROVAL OR AS DIRECTED BY OWNER'S REPRESENTATIVE.
4. CONTRACTOR SHALL SWEEP STREETS AND PARKING AREAS AFFECTED BY CONSTRUCTION WITH STREET SWEEPER AS REQUIRED TO KEEP PAVING CLEAN OF CONSTRUCTION DEBRIS.

EROSION AND SEDIMENT CONTROL LEGEND

SYM	DESCRIPTION	DTL REF
■ ■ ■	LIMIT OF WORK	
⊘	STORM DRAIN INLET FILTER FOR EXISTING AND PROPOSED STORM DRAINS	A L2.1
- - -	SEDIMENT RETENTION FIBER ROLL	B L2.1
○—○	TEMPORARY CONSTRUCTION FENCING	
▩	TEMPORARY CONCRETE WASHOUT FACILITY - PROVIDE A WASHOUT BIN FOR CONSTRUCTION WASHOUT AND REMOVE AT END OF CONSTRUCTION.	C L2.1
░	CONSTRUCTION STAGING AREA	
+ + +	CONSTRUCTION ENTRY	D L2.2
→	DIRECTION OF SURFACE FLOW	

IDENTIFICATION STAMP
DIV. OF THE STATE ARCHITECT
APP: 02-123587 INC:
REVIEWED FOR
SS ☑ FLS ☑ ACS ☑
DATE: 01/16/2026

VERDE DESIGN
LANDSCAPE ARCHITECTURE
CIVIL ENGINEERING
SPORT PLANNING & DESIGN
1843 Iron Point Rd. Suite 140
Folsom, CA 95630
tel: 916.415.6554
fax: 916.415.6525
www.VerdeDesignInc.com

STAMP

REGISTERED LANDSCAPE ARCHITECT
MARK S. BAGINSKI
No. 4089
Signature
EXPIRATION DATE: JULY 2027
STATE OF CALIFORNIA

CONSULTANT

KEYMAP

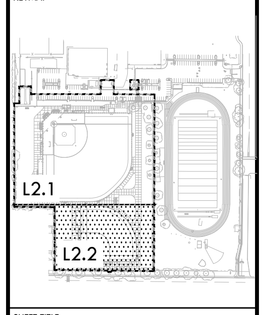

SHEET TITLE
EROSION AND SEDIMENT CONTROL PLAN - SOFTBALL FIELD

PROJECT NAME
LODI HIGH SCHOOL ATHLETIC FIELD IMPROVEMENTS

PROJECT ADDRESS
3 S PACIFIC AVE
LODI, CA
95242

SUBMITTAL	DATE
50% DSA SUBMITTAL	07/31/25
100% DSA SUBMITTAL	09/25/25
DSA BACKCHECK SUBMITTAL	12/17/25
DSA BACKCHECK SUBMITTAL	01/08/26

NO.	REVISIONS	DATE
△		
△		
△		
△		
△		
△		

DRAWN BY	CHECKED BY
HM	CS/MB
DATE ISSUED	SCALE
01/08/2026	1" = 20'-0"

PROJ. NO.
2502700

SHEET NO.
L2.2

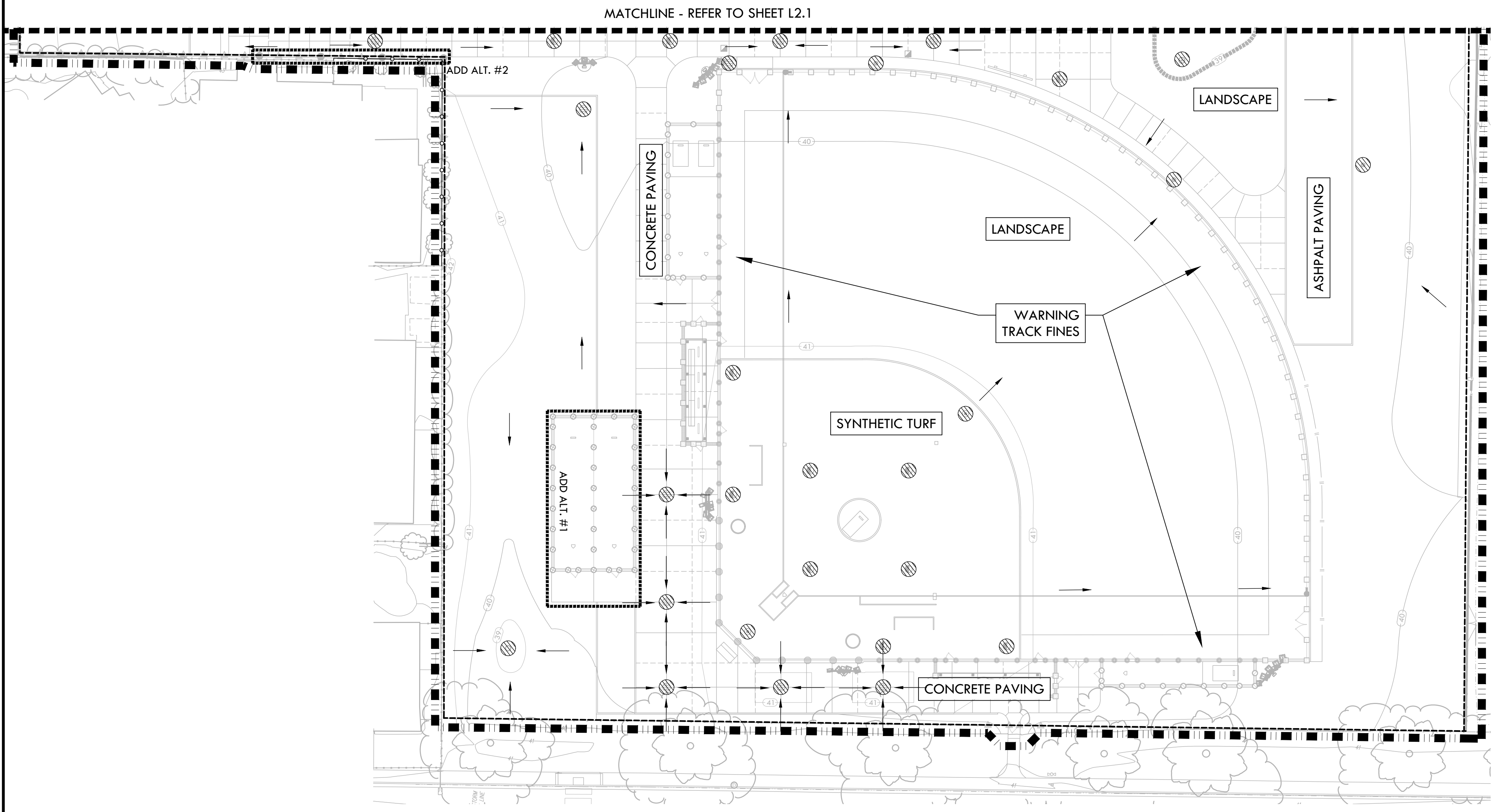

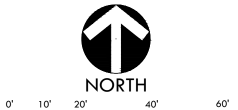

ALL IDEAS, DESIGNS, ARRANGEMENTS, AND PLANS INDICATED OR REPRESENTED BY THIS DRAWING ARE OWNED BY AND THE PROPERTY OF VERDE DESIGN, INC. AND WERE CREATED, EVOLVED, AND DEVELOPED FOR USE ON AND IN CONNECTION WITH THE SPECIFIED PROJECT. NONE OF SUCH IDEAS, DESIGNS, ARRANGEMENTS OR PLANS SHALL BE USED, REPRODUCED, OR PUBLISHED BY ANY METHOD, IN WHOLE OR IN PART, OR DISCLOSED TO ANY PERSON, FIRM, OR CORPORATION FOR ANY PURPOSE WHATSOEVER WITHOUT WRITTEN PERMISSION OF VERDE DESIGN, INC.

ALL IDEAS, DESIGNS, ARRANGEMENTS, AND PLANS INDICATED OR REPRESENTED BY THIS DRAWING ARE OWNED BY AND THE PROPERTY OF VERDE DESIGN, INC. AND WERE CREATED, EVOLVED, AND DEVELOPED FOR USE ON AND IN CONNECTION WITH THE SPECIFIED PROJECT. NONE OF SUCH IDEAS, DESIGNS, ARRANGEMENTS OR PLANS SHALL BE USED, REPRODUCED, OR PUBLISHED BY ANY METHOD, IN WHOLE OR IN PART, OR DISCLOSED TO ANY PERSON, FIRM, OR CORPORATION FOR ANY PURPOSE WHATSOEVER WITHOUT WRITTEN PERMISSION OF VERDE DESIGN, INC.

ITEMS TO BE DEMOLISHED

17	CUT AND CAP EXISTING MAINLINE.
18	EXISTING MAINLINE TO BE DEMOLISHED AND REMOVED.
19	EXISTING FOULPOLE AND FOOTING TO BE DEMOLISHED AND REMOVED.
20	EXISTING UNKNOWN UNDERGROUND UTILITY LINE TO BE DEMOLISHED AND REMOVED.
21	DEMOLISH POWER AND DATA CONDUITS IN DUGOUT. CUT EXISTING CONDUIT AND ABANDON AT 24" BELOW GRADE. REMOVE ALL WIRES AND EQUIPMENT ABOVE-GRADE BACK TO SOURCE. BACKFILL CONDUIT WITH DIRT. REFER TO ELECTRICAL PLAN.
22	EXISTING SURVEY MARKER TO BE REMOVED.

ITEMS TO BE DEMOLISHED

5	EXISTING IRRIGATION EQUIPMENT, MAINLINE, LATERALS, AND HEADS TO BE DEMOLISHED AND REMOVED.
6	EXISTING BACKSTOP, BRICK WALL AND/OR BASEBOARDS, AND FOOTINGS TO BE DEMOLISHED AND REMOVED.
7	EXISTING BULLPEN, FENCING, GATE, NETTING, FOOTINGS, ELECTRICAL AND RELATED STRUCTURES TO BE DEMOLISHED AND REMOVED. REFER TO ELECTRICAL PLANS.
8	EXISTING DRINKING FOUNTAIN, INCLUDING BASE AND FOOTING, TO BE DEMOLISHED AND REMOVED. CAP EXISTING WATER AND SEWER LINE IF REMAINING.
9	EXISTING BASE, MOUND AND HOME PLATE TO BE DEMOLISHED AND REMOVED.
10	EXISTING BLEACHER TO BE TURNED OVER TO THE DISTRICT.
11	EXISTING BENCH TO BE DEMOLISHED AND REMOVED.
12	EXISTING ACCESSIBLE RAMP INCLUDING CURBS TO BE DEMOLISHED AND REMOVED.
13	EXISTING SCOREBOARD, BEAMS, FOOTINGS, ELECTRICAL AND RELATED STRUCTURES TO BE DEMOLISHED AND REMOVED. REFER TO ELECTRICAL PLANS.
14	EXISTING FLAG POLE AND FOOTING TO BE DEMOLISHED AND REMOVED.
15	EXISTING CONCRETE DUGOUT STRUCTURE TO BE DEMOLISHED AND REMOVED.
16	EXISTING TREE IRRIGATION TO BE DEMOLISHED AND REMOVED.

ITEMS TO BE DEMOLISHED

1	EXISTING FENCING, GATE, EDGEBAND, AND/OR CURB AND GUTTER, INCLUDING FOOTING TO BE DEMOLISHED AND REMOVED. SEE NOTE ON SHEET L3.2 FOR FENCE REMOVAL NEXT TO RESIDENTIAL WOOD FENCES.
2	EXISTING SIGN AND ASSOCIATED FOOTING TO BE DEMOLISHED AND REMOVED.
3	EXISTING ELECTRICAL, COMMUNICATION, AND DATA LINES AND COMPONENTS TO BE DEMOLISHED AND REMOVED. REFER TO ELECTRICAL PLANS.
4	EXISTING EQUIPMENT AND PORTA POTTY UNITS TO BE RELOCATED. REFER TO DISTRICT FOR LOCATION.

ITEMS TO BE PROTECTED OR RELOCATED

S	EXISTING UTILITY POLE AND GUY WIRE AND ASSOCIATED LINES AND BOXES TO REMAIN AND BE PROTECTED. CONTRACTOR TO BE AWARE OF LOW HANGING UTILITY LINE FROM THESE POLES.
T	EXISTING PORTABLE BATTING CAGE TO BE REMOVED AND RELOCATED PER DISTRICT.
U	EXISTING STORAGE CONTAINER TO BE TURNED OVER TO THE DISTRICT.
V	EXISTING WOOD FENCE AND TALL CURB TO REMAIN AND BE PROTECTED.

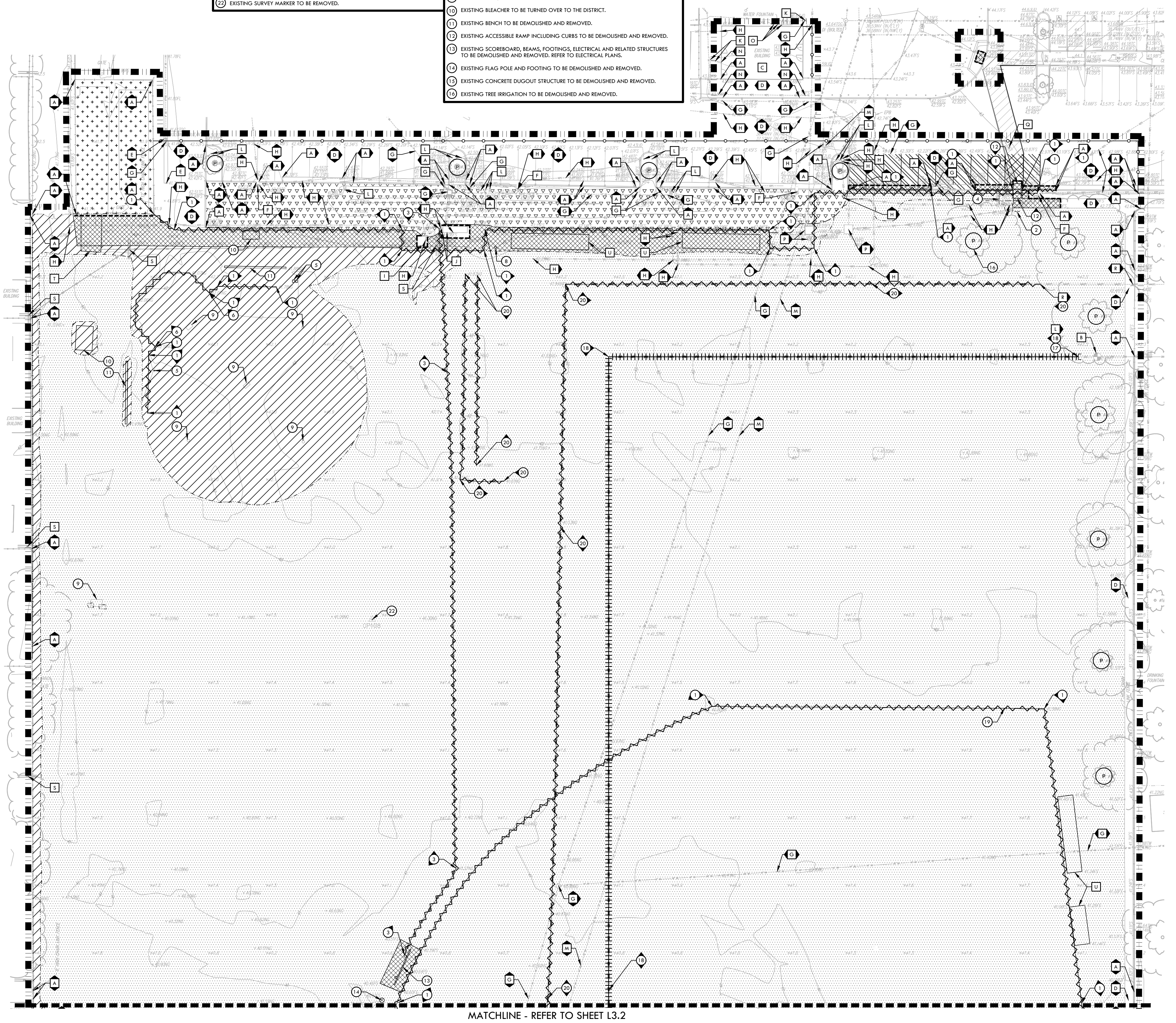

MATCHLINE - REFER TO SHEET L3.2

DEMOLITION NOTES

1. THE CONTRACTOR SHALL PERFORM ALL CLEARING, DEMOLITION, REMOVAL OF OBSTRUCTIONS AND SITE PREPARATIONS NECESSARY FOR THE PROPER EXECUTION OF ALL WORK CONTAINED IN THE CONTRACT DOCUMENTS.
2. CONTRACTOR SHALL VERIFY LOCATION OF ALL EXISTING UTILITIES AND PROVIDE THE REQUIRED COORDINATION FOR THEIR TEMPORARY DISCONNECTION, PROTECTION, REMOVAL AND/OR STORAGE AS MAY BE REQUIRED DURING CONSTRUCTION. CONTRACTOR SHALL COORDINATE WITH THE DISTRICT TO DETERMINE WHETHER TEMPORARY SERVICES ARE NECESSARY.
3. THE CONTRACTOR SHALL VISIT THE SITE TO DETERMINE THE EXACT EXTENT AND DEPTH OF SITE DEMOLITION REQUIRED AND VERIFY COMPLIANCE WITH DRAWINGS. THE DISTRICT SHALL BE NOTIFIED IMMEDIATELY OF ANY DISCREPANCIES.
4. THE CONTRACTOR SHALL VERIFY THE LOCATIONS OF ALL EXISTING UTILITIES, STRUCTURES AND SERVICES BEFORE COMMENCING WORK. THE LOCATIONS OF UTILITIES, STRUCTURES AND SERVICES SHOWN IN THE CONTRACT DOCUMENTS SHALL BE DEEMED TO BE APPROXIMATIONS ONLY. ALL DISCREPANCIES BETWEEN WHAT IS SHOWN AND THE ACTUAL FIELD CONDITIONS SHALL BE REPORTED TO THE DISTRICT'S REPRESENTATIVE. THE CONTRACTOR SHALL CONTACT UNDERGROUND SERVICE ALERT (USA) AT (800) 227-2600 PRIOR TO ANY DEMOLITION OR EXCAVATION. UPON COMPLETION OF USA MARKING OPERATIONS, CONTRACTOR SHALL RECORD ALL UTILITY MARKINGS ON A SEPARATE SET OF DRAWINGS. THIS SET SHALL BE KEPT ON-SITE FOR REFERENCE FOR DURATION OF CONTRACT. NOTIFY THE DISTRICT'S REPRESENTATIVE IMMEDIATELY SHOULD CONFLICTS ARISE AND REDIRECT WORK TO AVOID DELAY.
5. ALL EXISTING ITEMS ARE TO REMAIN UNLESS OTHERWISE NOTED. THE CONTRACTOR SHALL BE RESPONSIBLE FOR REPAIRING OR REPLACING, AT CONTRACTOR'S EXPENSE, ANY EXISTING ITEM DAMAGED OR DESTROYED BY CONSTRUCTION OPERATIONS. CONTRACTOR SHALL ALSO BE RESPONSIBLE FOR REPAIRING OR REPLACING ANY AND ALL DAMAGES TO ADJACENT PROPERTIES. THE DAMAGED ITEMS SHALL BE RESTORED TO AN "AS-WAS" OR BETTER CONDITION OR REPLACED PER THE DISCRETION OF THE DISTRICT'S REPRESENTATIVE.
6. PRIOR TO ANY DEMOLITION WORK, CONTRACTOR SHALL INSTALL SELF-SUPPORTING INTERLOCKING CHAIN-LINK TEMPORARY CONSTRUCTION FENCING TO ENCLOSE AND SECURE THE PROJECT AREA LIMIT OF WORK. THE FENCING SHALL CONTAIN PEDESTRIAN AND/OR VEHICULAR ACCESS GATES AS NECESSARY AND SHALL BE MINIMUM 6 FEET HIGH WITH A TOP AND BOTTOM RAIL WITH KNUCKLED TOP AND BOTTOM SELVAGE (NO BARBED WIRE PERMITTED). SHALL INCLUDE FULL HEIGHT GREEN SHADE CLOTH COVERING. THE CONSTRUCTION FENCING WORK SHALL BE SUBJECT TO THE DISCRETION OF THE DISTRICT'S REPRESENTATIVE.
7. PRIOR TO ANY DEMOLITION WORK, CONTRACTOR SHALL PROTECT ALL EXISTING PLANT MATERIAL NOT SCHEDULED FOR REMOVAL BY INSTALLING TEMPORARY 4 FOOT HIGH "BLAZE ORANGE" CONSTRUCTION SAFETY FENCING AT THE DRIPLINE OR PERIMETER. THE FENCING SHALL BE SECURED WITH DRIVEN METAL STAKES. ALL TREE PROTECTION WORK SHALL BE SUBJECT TO THE DISCRETION OF THE DISTRICT'S REPRESENTATIVE.
8. EXISTING IRRIGATION EQUIPMENT, MAINLINE, LATERALS, AND HEADS TO REMAIN AND BE PROTECTED UNLESS OTHERWISE NOTED ON PLAN. EXISTING IRRIGATION SYSTEM TO BE OPERABLE DURING CONSTRUCTION.
9. REFER TO SPECIFICATIONS FOR ADDITIONAL CLEARING, GRUBBING, TOPSOIL STOCKPILING AND OTHER PERTINENT INFORMATION.

DEMOLITION LEGEND

SYM	DESCRIPTION
▬ ▬	LIMIT OF WORK
(#) →	KEY LEGEND CALLOUT - ITEMS TO BE DEMOLISHED AND REMOVED
[#] →	KEY LEGEND CALLOUT - ITEMS TO REMAIN AND BE PROTECTED
⋯	SURFACE VEGETATION TO BE REMOVED PER SPECIFICATIONS. REFER TO EARTHWORK SPECIFICATIONS FOR INFORMATION.
▽ ▽ ▽	EXISTING BIORETENTION BASIN TO REMAIN AND BE PROTECTED. IF ANY DAMAGE OCCURS DURING CONSTRUCTION, CONTRACTOR IS RESPONSIBLE TO RETURN IT TO AS FOUND CONDITION.
+ + +	EXISTING CONCRETE BATTING CAGE FENCING AND FLATWORK TO REMAIN. EXISTING BATTING CAGE NETTING TO BE REUSED. REMOVE ALL RUBBER MATS, PADS, AND CLEAR ALL WEEDS AND OTHER DEBRIS TO ALLOW FOR NEW WORK.
▧	EXISTING ASPHALT PAVEMENT TO REMAIN. PARKING STALLS TO BE RE-STRIPED PER PLAN.
▨	DECOMPOSED GRANITE, INFIELD FINES, AB &/OR SAND TO BE REMOVED PER SPECIFICATIONS. REMOVE EXCESS SOIL FROM SITE & DISPOSE IN LEGAL MANNER. REFER TO EARTHWORK SPECIFICATIONS FOR INFORMATION.
▩	DEMOLISH AND REMOVE EXISTING HARDSCAPE PAVING INCLUDING BASE MATERIAL. CONTRACTOR TO DISPOSE OF IN A LEGAL MANNER.
○─○	TEMPORARY CONSTRUCTION FENCING
⁄\/\/	DEMOLISH AND REMOVE EXISTING CURB, UTILITY LINE, AND/OR FENCE, INCLUDING POSTS, FABRIC, CURBS, EDGEBANDS AND FOOTINGS
┼┼┼	DEMOLISH AND REMOVE EXISTING MAINLINE AND ASSOCIATED REMOTE CONTROL VALVES AND LATERAL LINES AND HEADS
▬ ▬ ▬	SAWCUT
— —	LIMIT OF CLEAR AND GRUB
Ⓟ	TREE TO REMAIN AND BE PROTECTED, REFER TO SPECIFICATIONS

ITEMS TO BE PROTECTED OR RELOCATED

A	EXISTING FENCE, GATE, EDGEBANDS AND/OR CURB AND GUTTER TO REMAIN AND BE PROTECTED.
B	EXISTING IRRIGATION VALVES TO REMAIN AND BE PROTECTED. THESE VALVES ARE TO REMAIN OPERABLE DURING CONSTRUCTION.
C	EXISTING BUILDING TO REMAIN AND BE PROTECTED.
D	EXISTING HARDSCAPE TO REMAIN AND BE PROTECTED.
E	EXISTING CONCRETE SWALE TO REMAIN AND BE PROTECTED.
F	EXISTING LIGHT FIXTURE, POST, ELECTRICAL COMPONENTS, AND FOOTING TO REMAIN AND BE PROTECTED.
G	EXISTING CATCH BASINS OR DRAIN STRUCTURES INCLUDING LINES TO REMAIN AND BE PROTECTED. THE OUTLET PIPES OF THESE CATCH BASINS ARE TO REMAIN AND BE PROTECTED. CONTRACTOR TO ADJUST RIM ELEVATION TO PROPOSED FINISH GRADE ELEVATION IF REQUIRED.
H	EXISTING ELECTRICAL PULL BOX, ELECTRICAL, COMMUNICATION, AND DATA LINES AND COMPONENTS TO REMAIN AND BE PROTECTED. REFER TO ELECTRICAL PLANS FOR INFORMATION.
I	EXISTING ELECTRICAL TRANSFORMER TO REMAIN AND BE PROTECTED. REFER TO ELECTRICAL PLANS.
J	EXISTING ELECTRICAL CABINET TO REMAIN AND BE PROTECTED. REFER TO ELECTRICAL PLANS.
K	EXISTING WATER VALVE TO REMAIN AND BE PROTECTED.
L	EXISTING IRRIGATION EQUIPMENT, MAINLINE, LATERALS, AND HEADS TO REMAIN AND BE PROTECTED. EXISTING IRRIGATION SYSTEM TO BE OPERABLE DURING CONSTRUCTION.
M	EXISTING SANITARY SEWER STRUCTURES INCLUDING LINES TO REMAIN AND BE PROTECTED. CONTRACTOR TO ADJUST RIM ELEVATION TO PROPOSED FINISH GRADE ELEVATION IF REQUIRED.
N	EXISTING WATER STRUCTURES INCLUDING LINES TO REMAIN AND BE PROTECTED.
O	EXISTING WATER FOUNTAIN AND RAIL TO REMAIN AND BE PROTECTED.
P	EXISTING ELECTRICAL VAULT, SIGNAL VAULT, AND FIRE ALARM PULL BOX AND RELATED EXISTING CONDUITS TO REMAIN AND BE PROTECTED. RAISE UP THE EXISTING GROUND BOXES TO BE FLUSH WITH FINISHED GRADE AND PROVIDE TRAFFIC RATED LIDS. VERIFY CONDUIT LOCATIONS BEFORE ANY WORK IS DONE. REFER TO ELECTRICAL PLANS.
Q	SURVEY MARKER TO REMAIN AND BE PROTECTED.
R	EXISTING UNKNOWN LINES TO REMAIN AND PROTECTED.

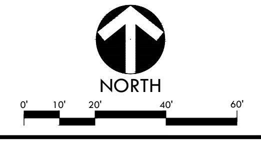

IDENTIFICATION STAMP
DIV. OF THE STATE ARCHITECT
APP: 02-123587 INC:
REVIEWED FOR
SS ☑ FLS ☑ ACS ☑
DATE: 01/16/2026

VERDE DESIGN
LANDSCAPE ARCHITECTURE
CIVIL ENGINEERING
SPORT PLANNING & DESIGN
1843 Iron Point Rd. Suite 140
Folsom, CA 95630
tel: 916.415.6554
fax: 916.415.6525
www.VerdeDesignInc.com

STAMP

MARK S. BAGINSKI
No. 4089
EXPIRATION DATE: JULY 2027

CONSULTANT

KEYMAP

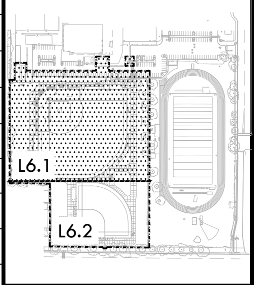

SHEET TITLE

DEMOLITION
PLAN -
BASEBALL FIELD

PROJECT NAME

LODI HIGH SCHOOL
ATHLETIC FIELD
IMPROVEMENTS

PROJECT ADDRESS

3 S PACIFIC AVE
LODI, CA
95242

SUBMITTAL	DATE
50% DSA SUBMITTAL	07/31/25
100% DSA SUBMITTAL	09/25/25
DSA BACKCHECK SUBMITTAL	12/17/25
DSA BACKCHECK SUBMITTAL	01/08/26

NO.	REVISIONS	DATE
△		
△		
△		
△		
△		
△		

DRAWN BY: AW
CHECKED BY: CS/MB
DATE ISSUED: 01/08/2026
SCALE: 1"=20'-0"
PROJ. NO.: 2502700
SHEET NO.: L3.1

ITEMS TO BE DEMOLISHED

⑰ CUT AND CAP EXISTING MAINLINE.
⑱ EXISTING MAINLINE TO BE DEMOLISHED AND REMOVED.
⑲ EXISTING FOULPOLE AND FOOTING TO BE DEMOLISHED AND REMOVED.
⑳ EXISTING UNKNOWN UNDERGROUND UTILITY LINE TO BE DEMOLISHED AND REMOVED.
㉑ DEMOLISH POWER AND DATA CONDUITS IN DUGOUT. CUT EXISTING CONDUIT AND ABANDON AT 24" BELOW GRADE. REMOVE ALL WIRES AND EQUIPMENT ABOVE-GRADE BACK TO SOURCE. BACKFILL CONDUIT WITH DIRT. REFER TO ELECTRICAL PLAN.
㉒ EXISTING SURVEY MARKER TO BE REMOVED.

ITEMS TO BE DEMOLISHED

⑤ EXISTING IRRIGATION EQUIPMENT, MAINLINE, LATERALS, AND HEADS TO BE DEMOLISHED AND REMOVED.
⑥ EXISTING BACKSTOP, BRICK WALL AND/OR BASEBOARDS, AND FOOTINGS TO BE DEMOLISHED AND REMOVED.
⑦ EXISTING BULLPEN, FENCING, GATE, NETTING, FOOTINGS, ELECTRICAL AND RELATED STRUCTURES TO BE DEMOLISHED AND REMOVED. REFER TO ELECTRICAL PLANS.
⑧ EXISTING DRINKING FOUNTAIN, INCLUDING BASE AND FOOTING, TO BE DEMOLISHED AND REMOVED. CAP EXISTING WATER AND SEWER LINE IF REMAINING.
⑨ EXISTING BASE, MOUND AND HOME PLATE TO BE DEMOLISHED AND REMOVED.
⑩ EXISTING BLEACHER TO BE TURNED OVER TO THE DISTRICT.
⑪ EXISTING BENCH TO BE DEMOLISHED AND REMOVED.
⑫ EXISTING ACCESSIBLE RAMP INCLUDING CURBS TO BE DEMOLISHED AND REMOVED.
⑬ EXISTING SCOREBOARD, BEAMS, FOOTINGS, ELECTRICAL AND RELATED STRUCTURES TO BE DEMOLISHED AND REMOVED. REFER TO ELECTRICAL PLANS.
⑭ EXISTING FLAG POLE AND FOOTING TO BE DEMOLISHED AND REMOVED.
⑮ EXISTING CONCRETE DUGOUT STRUCTURE TO BE DEMOLISHED AND REMOVED.
⑯ EXISTING TREE IRRIGATION TO BE DEMOLISHED AND REMOVED.

ITEMS TO BE DEMOLISHED

① EXISTING FENCING, GATE, EDGEBAND, AND/OR CURB AND GUTTER, INCLUDING FOOTING TO BE DEMOLISHED AND REMOVED. SEE NOTE ON SHEET L3.2 FOR FENCE REMOVAL NEXT TO RESIDENTIAL WOOD FENCES.
② EXISTING SIGN AND ASSOCIATED FOOTING TO BE DEMOLISHED AND REMOVED.
③ EXISTING ELECTRICAL, COMMUNICATION, AND DATA LINES AND COMPONENTS TO BE DEMOLISHED AND REMOVED. REFER TO ELECTRICAL PLANS.
④ EXISTING EQUIPMENT AND PORTA POTTY UNITS TO BE RELOCATED. REFER TO DISTRICT FOR LOCATION.

ITEMS TO BE PROTECTED OR RELOCATED

S EXISTING UTILITY POLE AND GUY WIRE AND ASSOCIATED LINES AND BOXES TO REMAIN AND BE PROTECTED. CONTRACTOR TO BE AWARE OF LOW HANGING UTILITY LINE FROM THESE POLES.
T EXISTING PORTABLE BATTING CAGE TO BE REMOVED AND RELOCATED PER DISTRICT.
U EXISTING STORAGE CONTAINER TO BE TURNED OVER TO THE DISTRICT.
V EXISTING WOOD FENCE AND TALL CURB TO REMAIN AND BE PROTECTED.

DEMOLITION NOTES

1. THE CONTRACTOR SHALL PERFORM ALL CLEARING, DEMOLITION, REMOVAL OF OBSTRUCTIONS AND SITE PREPARATIONS NECESSARY FOR THE PROPER EXECUTION OF ALL WORK CONTAINED IN THE CONTRACT DOCUMENTS.
2. CONTRACTOR SHALL VERIFY LOCATION OF ALL EXISTING UTILITIES AND PROVIDE THE REQUIRED COORDINATION FOR THEIR TEMPORARY DISCONNECTION, PROTECTION, REMOVAL AND/OR STORAGE AS MAY BE REQUIRED DURING CONSTRUCTION. CONTRACTOR SHALL COORDINATE WITH THE DISTRICT TO DETERMINE WHETHER TEMPORARY SERVICES ARE NECESSARY.
3. THE CONTRACTOR SHALL VISIT THE SITE TO DETERMINE THE EXACT EXTENT AND DEPTH OF SITE DEMOLITION REQUIRED AND VERIFY COMPLIANCE WITH DRAWINGS. THE DISTRICT SHALL BE NOTIFIED IMMEDIATELY OF ANY DISCREPANCIES.
4. THE CONTRACTOR SHALL VERIFY THE LOCATIONS OF ALL EXISTING UTILITIES, STRUCTURES AND SERVICES BEFORE COMMENCING WORK. THE LOCATIONS OF UTILITIES, STRUCTURES AND SERVICES SHOWN IN THE CONTRACT DOCUMENTS SHALL BE DEEMED TO BE APPROXIMATIONS ONLY. ALL DISCREPANCIES BETWEEN WHAT IS SHOWN AND THE ACTUAL FIELD CONDITIONS SHALL BE REPORTED TO THE DISTRICT'S REPRESENTATIVE. THE CONTRACTOR SHALL CONTACT UNDERGROUND SERVICE ALERT (USA) AT (800) 227-2600 PRIOR TO ANY DEMOLITION OR EXCAVATION. UPON COMPLETION OF USA MARKING OPERATIONS, CONTRACTOR SHALL RECORD ALL UTILITY MARKINGS ON A SEPARATE SET OF DRAWINGS. THIS SET SHALL BE KEPT ON-SITE FOR REFERENCE FOR DURATION OF CONTRACT. NOTIFY THE DISTRICT'S REPRESENTATIVE IMMEDIATELY SHOULD CONFLICTS ARISE AND REDIRECT WORK TO AVOID DELAY.
5. ALL EXISTING ITEMS ARE TO REMAIN UNLESS OTHERWISE NOTED. THE CONTRACTOR SHALL BE RESPONSIBLE FOR REPAIRING OR REPLACING, AT CONTRACTOR'S EXPENSE, ANY EXISTING ITEM DAMAGED OR DESTROYED BY CONSTRUCTION OPERATIONS. CONTRACTOR SHALL ALSO BE RESPONSIBLE FOR REPAIRING OR REPLACING ANY AND ALL DAMAGES TO ADJACENT PROPERTIES. THE DAMAGED ITEMS SHALL BE RESTORED TO AN "AS-WAS" OR BETTER CONDITION OR REPLACED PER THE DISCRETION OF THE DISTRICT'S REPRESENTATIVE.
6. PRIOR TO ANY DEMOLITION WORK, CONTRACTOR SHALL INSTALL SELF-SUPPORTING INTERLOCKING CHAIN-LINK TEMPORARY CONSTRUCTION FENCING TO ENCLOSE AND SECURE THE PROJECT AREA LIMIT OF WORK. THE FENCING SHALL CONTAIN PEDESTRIAN AND/OR VEHICULAR ACCESS GATES AS NECESSARY AND SHALL BE MINIMUM 6 FEET HIGH WITH A TOP AND BOTTOM RAIL WITH KNUCKLED TOP AND BOTTOM SELVAGE (NO BARBED WIRE PERMITTED). SHALL INCLUDE FULL HEIGHT GREEN SHADE CLOTH COVERING. THE CONSTRUCTION FENCING WORK SHALL BE SUBJECT TO THE DISCRETION OF THE DISTRICT'S REPRESENTATIVE.
7. PRIOR TO ANY DEMOLITION WORK, CONTRACTOR SHALL PROTECT ALL EXISTING PLANT MATERIAL NOT SCHEDULED FOR REMOVAL BY INSTALLING TEMPORARY 4 FOOT HIGH "BLAZE ORANGE" CONSTRUCTION SAFETY FENCING AT THE DRIPLINE OR PERIMETER. THE FENCING SHALL BE SECURED WITH DRIVEN METAL STAKES. ALL TREE PROTECTION WORK SHALL BE SUBJECT TO THE DISCRETION OF THE DISTRICT'S REPRESENTATIVE.
8. EXISTING IRRIGATION EQUIPMENT, MAINLINE, LATERALS, AND HEADS TO REMAIN AND BE PROTECTED UNLESS OTHERWISE NOTED ON PLAN. EXISTING IRRIGATION SYSTEM TO BE OPERABLE DURING CONSTRUCTION.
9. REFER TO SPECIFICATIONS FOR ADDITIONAL CLEARING, GRUBBING, TOPSOIL STOCKPILING AND OTHER PERTINENT INFORMATION.

DEMOLITION LEGEND

SYM	DESCRIPTION
▬ ▬	LIMIT OF WORK
(#) →	KEY LEGEND CALLOUT - ITEMS TO BE DEMOLISHED AND REMOVED
[#] →	KEY LEGEND CALLOUT - ITEMS TO REMAIN AND BE PROTECTED
⁘	SURFACE VEGETATION TO BE REMOVED PER SPECIFICATIONS. REFER TO EARTHWORK SPECIFICATIONS FOR INFORMATION.
▽	EXISTING BIORETENTION BASIN TO REMAIN AND BE PROTECTED. IF ANY DAMAGE OCCURS DURING CONSTRUCTION, CONTRACTOR IS RESPONSIBLE TO RETURN IT TO AS FOUND CONDITION.
+	EXISTING CONCRETE BATTING CAGE FENCING AND FLATWORK TO REMAIN. EXISTING BATTING CAGE NETTING TO BE REUSED. REMOVE ALL RUBBER MATS, PADS, AND CLEAR ALL WEEDS AND OTHER DEBRIS TO ALLOW FOR NEW WORK.
▧	EXISTING ASPHALT PAVEMENT TO REMAIN. PARKING STALLS TO BE RE-STRIPED PER PLAN.
▨	DECOMPOSED GRANITE, INFIELD FINES, AB &/OR SAND TO BE REMOVED PER SPECIFICATIONS. REMOVE EXCESS SOIL FROM SITE & DISPOSE IN LEGAL MANNER. REFER TO EARTHWORK SPECIFICATIONS FOR INFORMATION.
▩	DEMOLISH AND REMOVE EXISTING HARDSCAPE PAVING INCLUDING BASE MATERIAL. CONTRACTOR TO DISPOSE OF IN A LEGAL MANNER.
○—○	TEMPORARY CONSTRUCTION FENCING
⋀⋀⋀	DEMOLISH AND REMOVE EXISTING CURB, UTILITY LINE, AND/OR FENCE, INCLUDING POSTS, FABRIC, CURBS, EDGEBANDS AND FOOTINGS
╫╫╫	DEMOLISH AND REMOVE EXISTING MAINLINE AND ASSOCIATED REMOTE CONTROL VALVES AND LATERAL LINES AND HEADS
- - -	SAWCUT
— —	LIMIT OF CLEAR AND GRUB
(P)	TREE TO REMAIN AND BE PROTECTED, REFER TO SPECIFICATIONS

ITEMS TO BE PROTECTED OR RELOCATED

A EXISTING FENCE, GATE, EDGEBANDS AND/OR CURB AND GUTTER TO REMAIN AND BE PROTECTED.
B EXISTING IRRIGATION VALVES TO REMAIN AND BE PROTECTED. THESE VALVES ARE TO REMAIN OPERABLE DURING CONSTRUCTION.
C EXISTING BUILDING TO REMAIN AND BE PROTECTED.
D EXISTING HARDSCAPE TO REMAIN AND BE PROTECTED.
E EXISTING CONCRETE SWALE TO REMAIN AND BE PROTECTED.
F EXISTING LIGHT FIXTURE, POST, ELECTRICAL COMPONENTS, AND FOOTING TO REMAIN AND BE PROTECTED.
G EXISTING CATCH BASINS OR DRAIN STRUCTURES INCLUDING LINES TO REMAIN AND BE PROTECTED. THE OUTLET PIPES OF THESE CATCH BASINS ARE TO REMAIN AND BE PROTECTED. CONTRACTOR TO ADJUST RIM ELEVATION TO PROPOSED FINISH GRADE ELEVATION IF REQUIRED.
H EXISTING ELECTRICAL PULL BOX, ELECTRICAL, COMMUNICATION, AND DATA LINES AND COMPONENTS TO REMAIN AND BE PROTECTED. REFER TO ELECTRICAL PLANS FOR INFORMATION.
I EXISTING ELECTRICAL TRANSFORMER TO REMAIN AND BE PROTECTED. REFER TO ELECTRICAL PLANS.
J EXISTING ELECTRICAL CABINET TO REMAIN AND BE PROTECTED. REFER TO ELECTRICAL PLANS.
K EXISTING WATER VALVE TO REMAIN AND BE PROTECTED.
L EXISTING IRRIGATION EQUIPMENT, MAINLINE, LATERALS, AND HEADS TO REMAIN AND BE PROTECTED. EXISTING IRRIGATION SYSTEM TO BE OPERABLE DURING CONSTRUCTION.
M EXISTING SANITARY SEWER STRUCTURES INCLUDING LINES TO REMAIN AND BE PROTECTED. CONTRACTOR TO ADJUST RIM ELEVATION TO PROPOSED FINISH GRADE ELEVATION IF REQUIRED.
N EXISTING WATER STRUCTURES INCLUDING LINES TO REMAIN AND BE PROTECTED.
O EXISTING WATER FOUNTAIN AND RAIL TO REMAIN AND BE PROTECTED.
P EXISTING ELECTRICAL VAULT, SIGNAL VAULT, AND FIRE ALARM PULL BOX AND RELATED EXISTING CONDUITS TO REMAIN AND BE PROTECTED. RAISE UP THE EXISTING GROUND BOXES TO BE FLUSH WITH FINISHED GRADE AND PROVIDE TRAFFIC RATED LIDS. VERIFY CONDUIT LOCATIONS BEFORE ANY WORK IS DONE. REFER TO ELECTRICAL PLANS.
Q SURVEY MARKER TO REMAIN AND BE PROTECTED.
R EXISTING UNKNOWN LINES TO REMAIN AND PROTECTED.

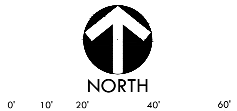

IDENTIFICATION STAMP
DIV. OF THE STATE ARCHITECT
APP: 02-123587 INC:
REVIEWED FOR
SS ☑ FLS ☑ ACS ☑
DATE: 01/16/2026

VERDE DESIGN
LANDSCAPE ARCHITECTURE
CIVIL ENGINEERING
SPORT PLANNING & DESIGN
1843 Iron Point Rd. Suite 140
Folsom, CA 95630
tel: 916.415.6554
fax: 916.415.6525
www.VerdeDesignInc.com

STAMP

MARK S. BAGINSKI
No. 4089
EXPIRATION DATE: JULY 2027

CONSULTANT

KEYMAP

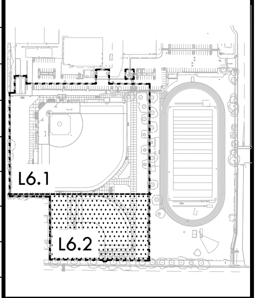

SHEET TITLE

DEMOLITION
PLAN -
SOFTBALL FIELD

PROJECT NAME

LODI HIGH SCHOOL
ATHLETIC FIELD
IMPROVEMENTS

PROJECT ADDRESS

3 S PACIFIC AVE
LODI, CA
95242

SUBMITTAL	DATE
50% DSA SUBMITTAL	07/31/25
100% DSA SUBMITTAL	09/25/25
DSA BACKCHECK SUBMITTAL	12/17/25
DSA BACKCHECK SUBMITTAL	01/08/26

NO.	REVISIONS	DATE
△		
△		
△		
△		
△		
△		

DRAWN BY AW	CHECKED BY CS/MB
DATE ISSUED 01/08/2026	SCALE 1"=20'-0"
PROJ. NO. 2502700	
SHEET NO. L3.2	

DEMOLITION PLAN - SOFTBALL FIELD

NOTE:
WOOD FENCES AT RESIDENCE SIDE ARE TO REMAIN AND BE PROTECTED. SEE PHOTOS ON THIS PAGE FOR MORE INFORMATION.

MATCHLINE - REFER TO SHEET L3.1

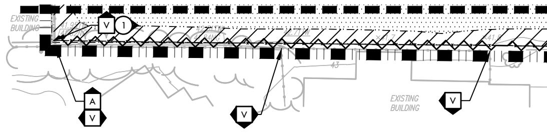

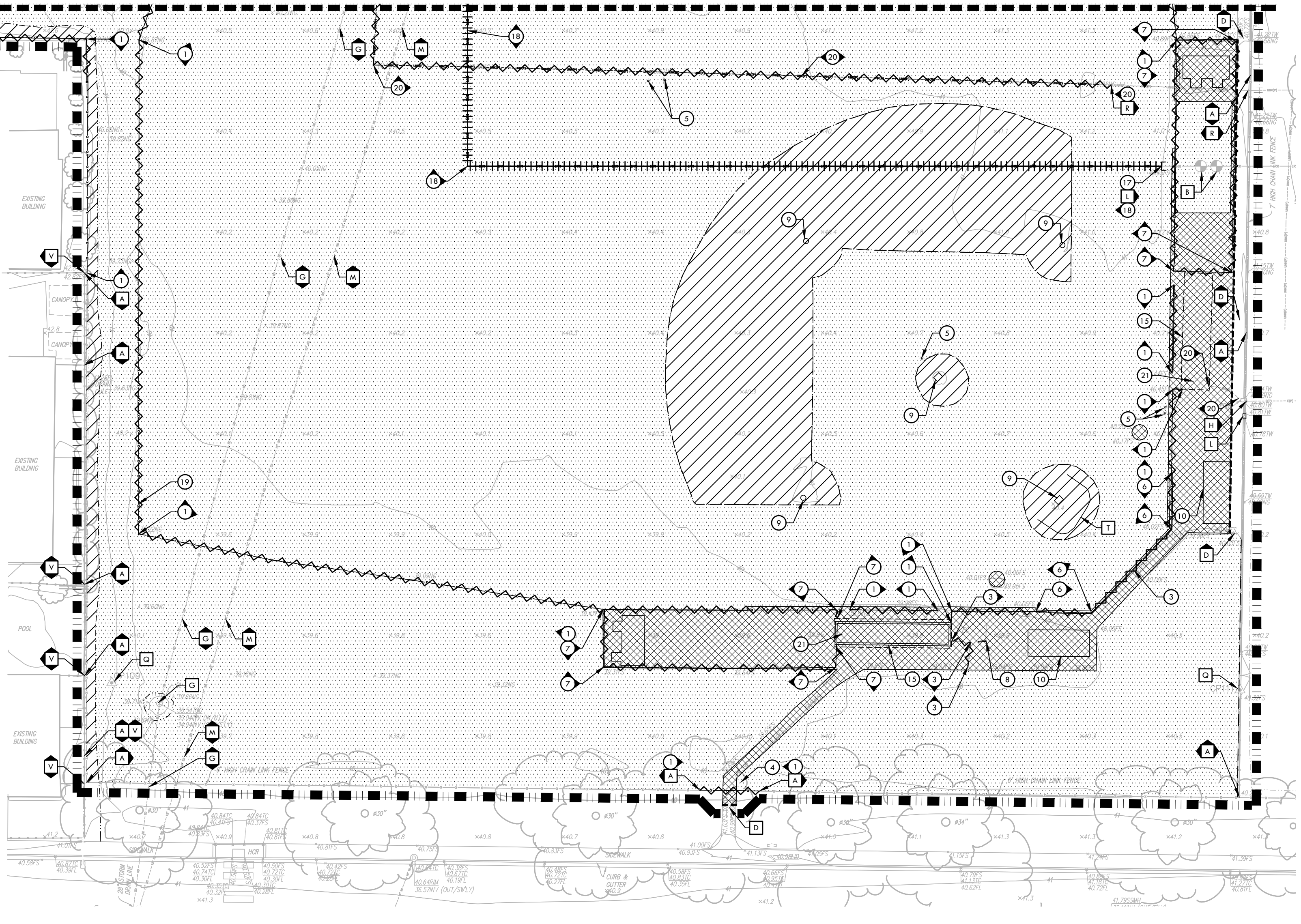

SITE PHOTO

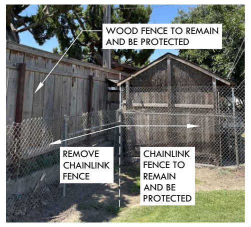
WOOD FENCE TO REMAIN AND BE PROTECTED
REMOVE CHAINLINK FENCE
CHAINLINK FENCE TO REMAIN AND BE PROTECTED

WEST CORNER

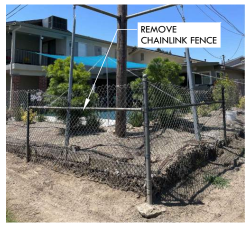

EAST CORNER

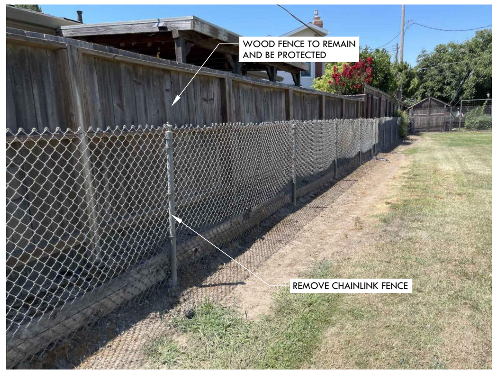

EAST TO WEST

ALL IDEAS, DESIGNS, ARRANGEMENTS, AND PLANS INDICATED OR REPRESENTED BY THIS DRAWING ARE OWNED BY AND THE PROPERTY OF VERDE DESIGN, INC. AND WERE CREATED, EVOLVED, AND DEVELOPED FOR USE ON AND IN CONNECTION WITH THE SPECIFIED PROJECT. NONE OF SUCH IDEAS, DESIGNS, ARRANGEMENTS OR PLANS SHALL BE USED, REPRODUCED, OR PUBLISHED BY ANY METHOD, IN WHOLE OR IN PART, OR DISCLOSED TO ANY PERSON, FIRM, OR CORPORATION FOR ANY PURPOSE WHATSOEVER WITHOUT WRITTEN PERMISSION OF VERDE DESIGN, INC.

DRAWING NAME: Y:\Projects-FO\2025\2502700 - Lodi HS Baseball and Softball Field\CAD_DEM.dwg
PLOT DATE: 12-11-25 PLOTTED BY: station45

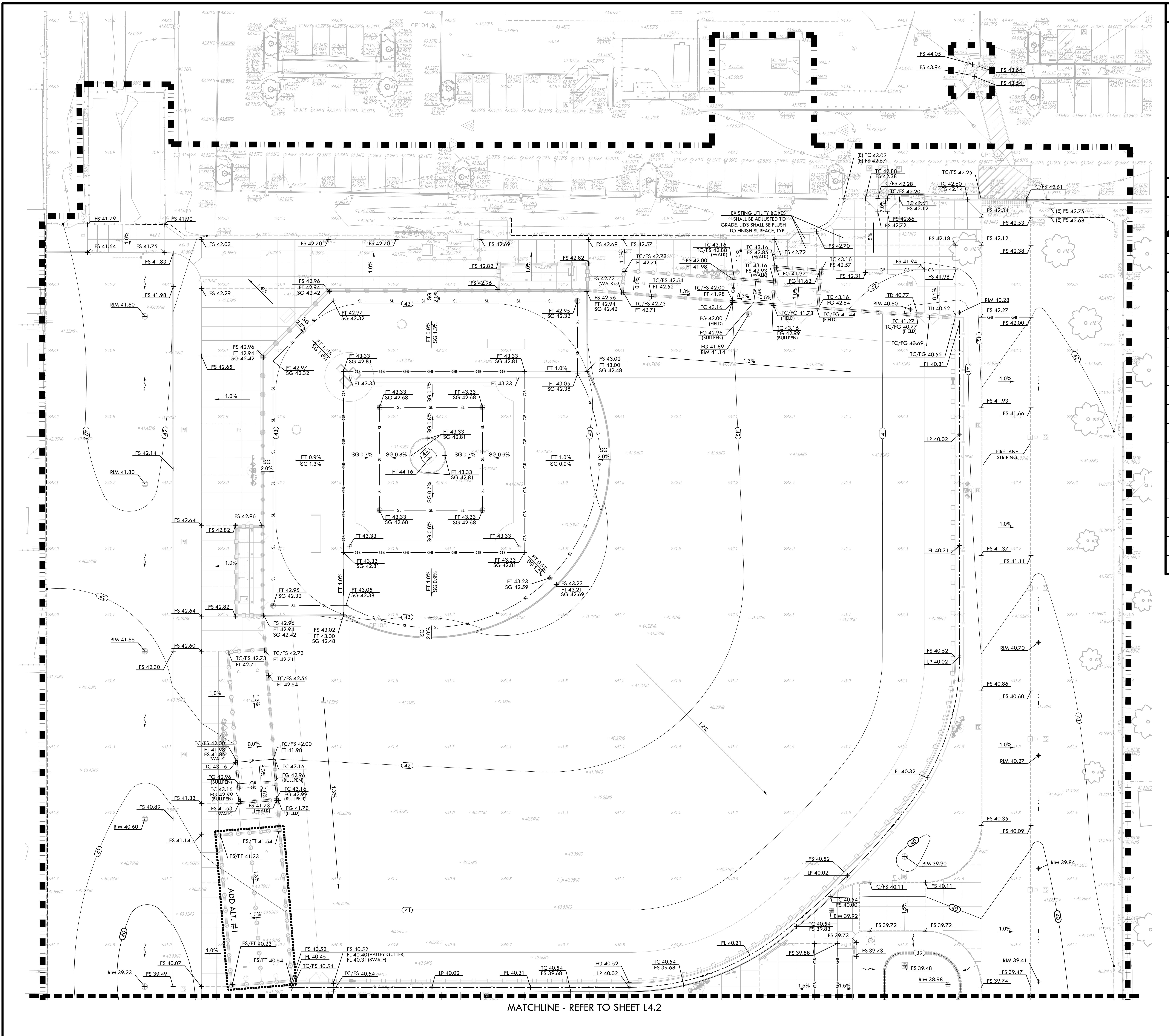

FS 44.05
FS 43.94
FS 43.64
FS 43.54
CP104
FS 41.79
FS 41.90
FS 42.03
FS 41.64
FS 41.75
FS 41.83
FS 41.98
RIM 41.60
FS 42.70
FS 42.70
FS 42.69
FS 42.69
FS 42.57
FS 42.82
FS 42.82
FS 42.96
FS 42.29
EXISTING UTILITY BOXES SHALL BE ADJUSTED TO GRADE. LIDS SHALL BE FLUSH TO FINISH SURFACE, TYP.
(E) TC 43.03
(E) FS 42.57
TC 42.88
FS 42.38
TC/FS 42.28
TC/FS 42.20
TC/FS 42.25
TC 42.60
FS 42.14
TC 42.61
FS 42.12
TC/FS 42.61
FS 42.66
FS 42.72
FS 42.34
(E) FS 42.75
(E) FS 42.68
FS 42.53
FS 42.18
FS 42.12
FS 42.38
FS 42.72
FS 42.70
TC/FS 42.73
FT 42.71
TC/FS 42.54
FT 42.52
TC/FS 42.73
FT 42.71
TC 43.16
TC/FS 42.88
(WALK)
TC 43.16
TC/FS 42.85
(WALK)
FS 42.00
FT 41.98
TC 43.16
FS 42.57
FS 42.31
FS 41.94
FS 41.98
TC 43.16
FS 42.93
(WALK)
FG 41.92
FG 41.63
TC/FS 42.00
FT 41.98
TC 43.16
FG 42.00
(BULLPEN)
FG 42.96
(BULLPEN)
FG 41.89
RIM 41.14
TC 43.16
FG 42.99
(BULLPEN)
TC/FG 41.73
(FIELD)
TC 43.16
FG 42.54
TC/FG 41.44
(FIELD)
TD 40.77
RIM 40.60
TD 40.52
FC 41.27
TC/FG 40.77
(FIELD)
TC/FG 40.69
TC/FG 40.52
FL 40.31
RIM 40.28
FS 42.27
FS 42.00
FS 42.96
FT 42.94
SG 42.42
FS 42.65
FT 42.97
SG 42.32
FT 42.97
SG 42.32
FT 42.95
SG 42.32
FS 42.96
FT 42.94
SG 42.42
FS 43.02
FT 43.00
SG 42.48
FT 1.0%
FT 43.33
SG 42.81
FT 43.33
SG 42.68
FT 43.33
SG 42.81
FT 44.16
FT 43.33
SG 42.81
FT 43.05
SG 42.38
FT 0.9%
SG 1.3%
FT 1.0%
SG 0.9%
SG 0.8%
SG 0.7%
SG 0.6%
SG 2.0%
FT 43.23
SG 42.59
FS 43.23
FT 43.21
SG 42.69
FT 42.95
SG 42.32
FT 43.05
SG 42.38
FS 42.96
FT 42.94
SG 42.42
FS 43.02
FT 43.00
SG 42.48
CP108
FS 42.14
RIM 41.80
FS 42.64
FS 42.96
FS 42.82
FS 42.64
FS 42.82
RIM 41.65
FS 42.60
FS 42.30
TC/FS 42.73
FT 42.71
TC/FS 42.73
FT 42.71
TC/FS 42.56
FT 42.54
TC/FS 42.00
FT 41.98
FS 41.86
(WALK)
TC/FS 42.00
FT 41.98
TC 43.16
TC 43.16
FG 42.96
(BULLPEN)
FG 42.96
(BULLPEN)
TC 43.16
FG 42.99
(BULLPEN)
TC 43.16
FG 42.99
(BULLPEN)
FS 41.53
(WALK)
FS 41.73
(WALK)
FG 41.73
(FIELD)
FS 41.33
FS 40.89
RIM 40.60
FS 41.14
FS/FT 41.54
FS/FT 41.23
ADD ALT. #1
FS/FT 40.23
FS/FT 40.54
FS 40.07
FS 39.49
RIM 39.23
FS 40.52
FL 40.45
TC/FS 40.54
FS 40.52
FL 40.40 (VALLEY GUTTER)
FL 40.31 (SWALE)
TC/FS 40.54
LP 40.02
FL 40.31
TC 40.54
FS 39.68
FG 40.52
LP 40.02
TC 40.54
FS 39.68
FL 40.31
LP 40.02
FS 41.93
FS 41.66
LP 40.02
FIRE LANE STRIPING
FS 41.37
FS 41.11
FL 40.31
FS 40.52
LP 40.02
RIM 40.70
FS 40.86
FS 40.60
RIM 40.27
FL 40.32
FS 40.35
FS 40.09
RIM 39.90
RIM 39.84
FS 40.52
LP 40.02
TC/FS 40.11
FS 40.11
TC 40.54
FS 40.00
RIM 39.92
TC 40.54
FS 39.83
FS 39.73
FS 39.88
FS 39.73
FS 39.72
FS 39.72
RIM 39.48
RIM 38.98
RIM 39.41
FS 39.47
FS 39.74
1.0%
1.3%
1.2%
1.5%
0.5%
8.3%
6.1%
0.0%
MATCHLINE - REFER TO SHEET L4.2

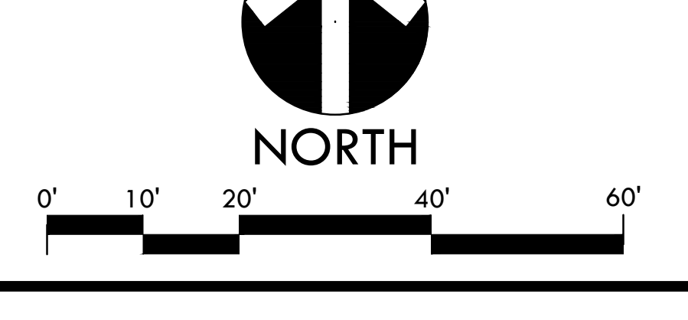

NORTH
0'
10'
20'
40'
60'

GRADING NOTES

1. EXISTING GRADES ARE BASED ON INFORMATION PROVIDED BY: CALVADA. CONTRACTOR SHALL VERIFY EXISTING GRADES FOR ACCURACY PRIOR TO THE START OF GRADING, NOTIFY THE DISTRICT'S REPRESENTATIVE IMMEDIATELY SHOULD CONFLICTS ARISE AND REDIRECT WORK TO AVOID DELAY.
2. THE CONTRACTOR SHALL VERIFY THE LOCATIONS OF ALL EXISTING UTILITIES, STRUCTURES AND SERVICES BEFORE COMMENCING WORK. THE LOCATIONS OF UTILITIES, STRUCTURES AND SERVICES SHOWN IN THE CONTRACT DOCUMENTS SHALL BE DEEMED TO BE APPROXIMATIONS ONLY. ALL DISCREPANCIES BETWEEN WHAT IS SHOWN AND THE ACTUAL FIELD CONDITIONS SHALL BE REPORTED TO THE DISTRICT'S REPRESENTATIVE. THE CONTRACTOR SHALL CONTACT UNDER GROUND SERVICE ALERT (USA) AT (800) 227-2600 PRIOR TO ANY DEMOLITION OR EXCAVATION. UPON COMPLETION OF USA MARKING OPERATIONS, CONTRACTOR SHALL RECORD ALL UTILITY MARKINGS ON A SEPARATE SET OF DRAWINGS. THIS SET SHALL BE KEPT ON-SITE FOR REFERENCE FOR DURATION OF CONTRACT.
3. PROPOSED GRADES SHALL MEET EXISTING GRADES WITH A SMOOTH AND CONTINUOUS TRANSITION SO AS TO AVOID TRAPPING WATER. CONTRACTOR SHALL NOTIFY DISTRICT REPRESENTATIVE IF PUDDLING IS SUSPECTED AND REDIRECT WORK SO AS TO AVOID DELAY WHILE AWAITING RESPONSE.
4. ALL EXISTING DRAINAGE STRUCTURES, BOXES, UTILITY VAULTS ETC. SHALL BE BROUGHT TO FINAL FINISH GRADE PRIOR TO FINAL SURFACE TREATMENT.

GRADING LEGEND

SYM	DESCRIPTION
▬ ▬ ▬	LIMIT OF WORK
- - - -	LIMIT OF GRADING - CONFORM TO EXISTING GRADES AT THIS LINE
SL	LOW POINT OF SUBGRADE
GB — GB	GRADE BREAK
— - —	CENTERLINE OF SWALE
▨	BOTTOM OF BIORETENTION BASIN, REFER TO DRAINAGE PLANS.
44	PROPOSED CONTOUR
FG 42.00	PROPOSED FINISH GRADE ELEVATION OF SOFTSCAPE / FINES
FT 42.00	PROPOSED ELEVATION OF TOP OF SYNTHETIC TURF INFILL
FS 42.00	PROPOSED FINISH SURFACE ELEVATION OF HARDSCAPE
FL 42.00	FLOW LINE ELEVATION OF SWALE / VALLEY GUTTER
LP 42.00	LOW POINT OF SWALE
RIM 41.00	RIM ELEVATION OF GRATE / LID
TC 42.50	TOP OF CURB
SG 42.00	PROPOSED SUBGRADE ELEVATION
1.00%	SLOPE AND DIRECTION
~→	FLOW DIRECTION IN SOFTSCAPE
43	EXISTING CONTOUR
×43.1	EXISTING ELEVATION

IDENTIFICATION STAMP
DIV. OF THE STATE ARCHITECT
APP: 02-123587 INC:
REVIEWED FOR
SS ☑ FLS ☑ ACS ☑
DATE: 01/16/2026

VERDE DESIGN
LANDSCAPE ARCHITECTURE
CIVIL ENGINEERING
SPORT PLANNING & DESIGN
1843 Iron Point Rd. Suite 140
Folsom, CA 95630
tel: 916.415.6554
fax: 916.415.6525
www.VerdeDesignInc.com

STAMP

REGISTERED LANDSCAPE ARCHITECT
MARK S. BAGINSKI
No. 4089
Signature
EXPIRATION DATE: JULY 2027
STATE OF CALIFORNIA

CONSULTANT

KEYMAP

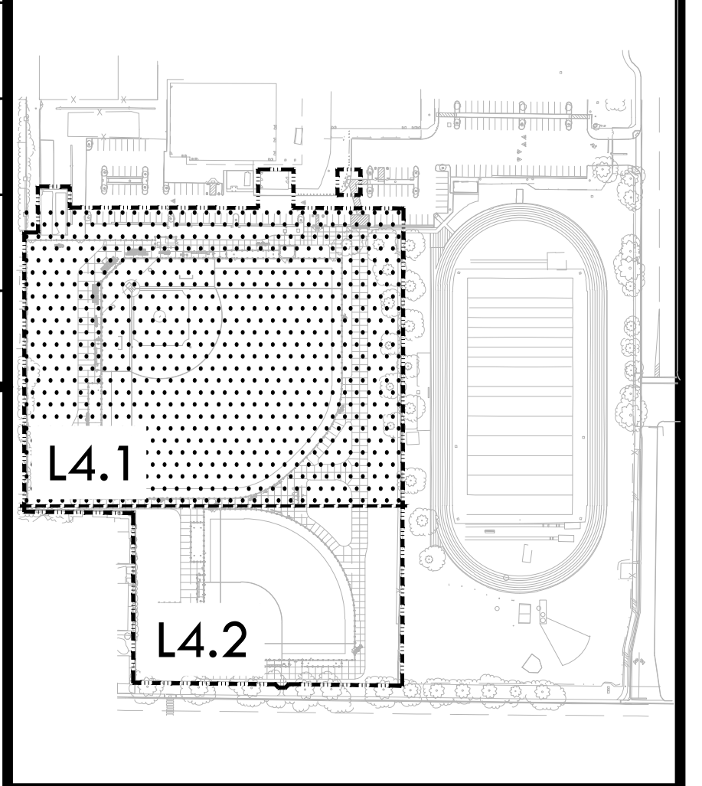

SHEET TITLE

GRADING
PLAN -
BASEBALL FIELD

PROJECT NAME

LODI HIGH SCHOOL
ATHLETIC FIELD
IMPROVEMENTS

PROJECT ADDRESS

3 S PACIFIC AVE
LODI, CA
95242

SUBMITTAL	DATE
50% DSA SUBMITTAL	07/31/25
100% DSA SUBMITTAL	09/25/25
DSA BACKCHECK SUBMITTAL	12/17/25
DSA BACKCHECK SUBMITTAL	01/08/26

NO.	REVISIONS	DATE
△		
△		
△		
△		
△		
△		

DRAWN BY DK	CHECKED BY CS/MB
DATE ISSUED 01/08/2026	SCALE 1"=20'-0"

PROJ. NO.
2502700

SHEET NO.
L4.1

GRADING PLAN - BASEBALL FIELD

ALL IDEAS, DESIGNS, ARRANGEMENTS, AND PLANS INDICATED OR REPRESENTED BY THIS DRAWING ARE OWNED BY AND THE PROPERTY OF VERDE DESIGN, INC. AND WERE CREATED, EVOLVED, AND DEVELOPED FOR USE ON AND IN CONNECTION WITH THE SPECIFIED PROJECT. NONE OF SUCH IDEAS, DESIGNS, ARRANGEMENTS OR PLANS SHALL BE USED, REPRODUCED, OR PUBLISHED BY ANY METHOD, IN WHOLE OR IN PART, OR DISCLOSED TO ANY PERSON, FIRM, OR CORPORATION FOR ANY PURPOSE WHATSOEVER WITHOUT WRITTEN PERMISSION OF VERDE DESIGN, INC.

DRAWING NAME: Y:\Projects-FO\2025\2502700 - Lodi HS Baseball and Softball Field\CAD_GRD.dwg
PLOT DATE: 12-15-25 PLOTTED BY: station67

ALL IDEAS, DESIGNS, ARRANGEMENTS, AND PLANS INDICATED OR REPRESENTED BY THIS DRAWING ARE OWNED BY AND THE PROPERTY OF VERDE DESIGN, INC. AND WERE CREATED, EVOLVED, AND DEVELOPED FOR USE ON AND IN CONNECTION WITH THE SPECIFIED PROJECT. NONE OF SUCH IDEAS, DESIGNS, ARRANGEMENTS OR PLANS SHALL BE USED, REPRODUCED, OR PUBLISHED BY ANY METHOD, IN WHOLE OR IN PART, OR DISCLOSED TO ANY PERSON, FIRM, OR CORPORATION FOR ANY PURPOSE WHATSOEVER WITHOUT WRITTEN PERMISSION OF VERDE DESIGN, INC.

SECTION

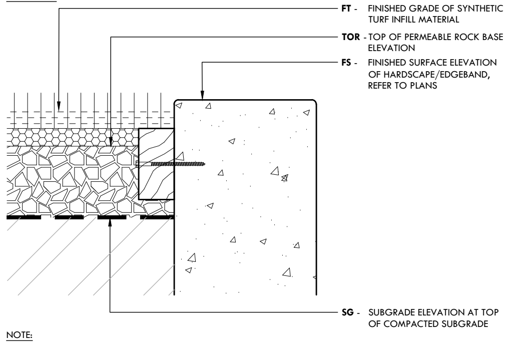
FT - FINISHED GRADE OF SYNTHETIC TURF INFILL MATERIAL
TOR - TOP OF PERMEABLE ROCK BASE ELEVATION
FS - FINISHED SURFACE ELEVATION OF HARDSCAPE/EDGEBAND, REFER TO PLANS
SG - SUBGRADE ELEVATION AT TOP OF COMPACTED SUBGRADE

NOTE:
FOR REFERENCE ONLY, REFER TO SYNTHETIC TURF & CONNECTION DETAIL H, D2.1.

① SYNTHETIC TURF GRADING CALLOUT DIAGRAM NTS

GRADING NOTES

1. EXISTING GRADES ARE BASED ON INFORMATION PROVIDED BY: CALVADA. CONTRACTOR SHALL VERIFY EXISTING GRADES FOR ACCURACY PRIOR TO THE START OF GRADING, NOTIFY THE DISTRICT'S REPRESENTATIVE IMMEDIATELY SHOULD CONFLICTS ARISE AND REDIRECT WORK TO AVOID DELAY.

2. THE CONTRACTOR SHALL VERIFY THE LOCATIONS OF ALL EXISTING UTILITIES, STRUCTURES AND SERVICES BEFORE COMMENCING WORK. THE LOCATIONS OF UTILITIES, STRUCTURES AND SERVICES SHOWN IN THE CONTRACT DOCUMENTS SHALL BE DEEMED TO BE APPROXIMATIONS ONLY. ALL DISCREPANCIES BETWEEN WHAT IS SHOWN AND THE ACTUAL FIELD CONDITIONS SHALL BE REPORTED TO THE DISTRICT'S REPRESENTATIVE. THE CONTRACTOR SHALL CONTACT UNDER GROUND SERVICE ALERT (USA) AT (800) 227-2600 PRIOR TO ANY DEMOLITION OR EXCAVATION. UPON COMPLETION OF USA MARKING OPERATIONS, CONTRACTOR SHALL RECORD ALL UTILITY MARKINGS ON A SEPARATE SET OF DRAWINGS. THIS SET SHALL BE KEPT ON-SITE FOR REFERENCE FOR DURATION OF CONTRACT.

3. PROPOSED GRADES SHALL MEET EXISTING GRADES WITH A SMOOTH AND CONTINUOUS TRANSITION SO AS TO AVOID TRAPPING WATER. CONTRACTOR SHALL NOTIFY DISTRICT REPRESENTATIVE IF PUDDLING IS SUSPECTED AND REDIRECT WORK SO AS TO AVOID DELAY WHILE AWAITING RESPONSE.

4. ALL EXISTING DRAINAGE STRUCTURES, BOXES, UTILITY VAULTS ETC. SHALL BE BROUGHT TO FINAL FINISH GRADE PRIOR TO FINAL SURFACE TREATMENT.

GRADING LEGEND

SYM	DESCRIPTION
▬ ▬	LIMIT OF WORK
- - -	LIMIT OF GRADING - CONFORM TO EXISTING GRADES AT THIS LINE
SL	LOW POINT OF SUBGRADE
GB GB	GRADE BREAK
— - —	CENTERLINE OF SWALE
▨	BOTTOM OF BIORETENTION BASIN, REFER TO DRAINAGE PLANS.
44	PROPOSED CONTOUR
FG 42.00	PROPOSED FINISH GRADE ELEVATION OF SOFTSCAPE / FINES
FT 42.00	PROPOSED ELEVATION OF TOP OF SYNTHETIC TURF INFILL
FS 42.00	PROPOSED FINISH SURFACE ELEVATION OF HARDSCAPE
FL 42.00	FLOW LINE ELEVATION OF SWALE / VALLEY GUTTER
LP 42.00	LOW POINT OF SWALE
RIM 41.00	RIM ELEVATION OF GRATE / LID
TC 42.50	TOP OF CURB
SG 42.00	PROPOSED SUBGRADE ELEVATION
1.00%	SLOPE AND DIRECTION
~→	FLOW DIRECTION IN SOFTSCAPE
43	EXISTING CONTOUR
×43.1	EXISTING ELEVATION

MATCHLINE - REFER TO SHEET L4.1

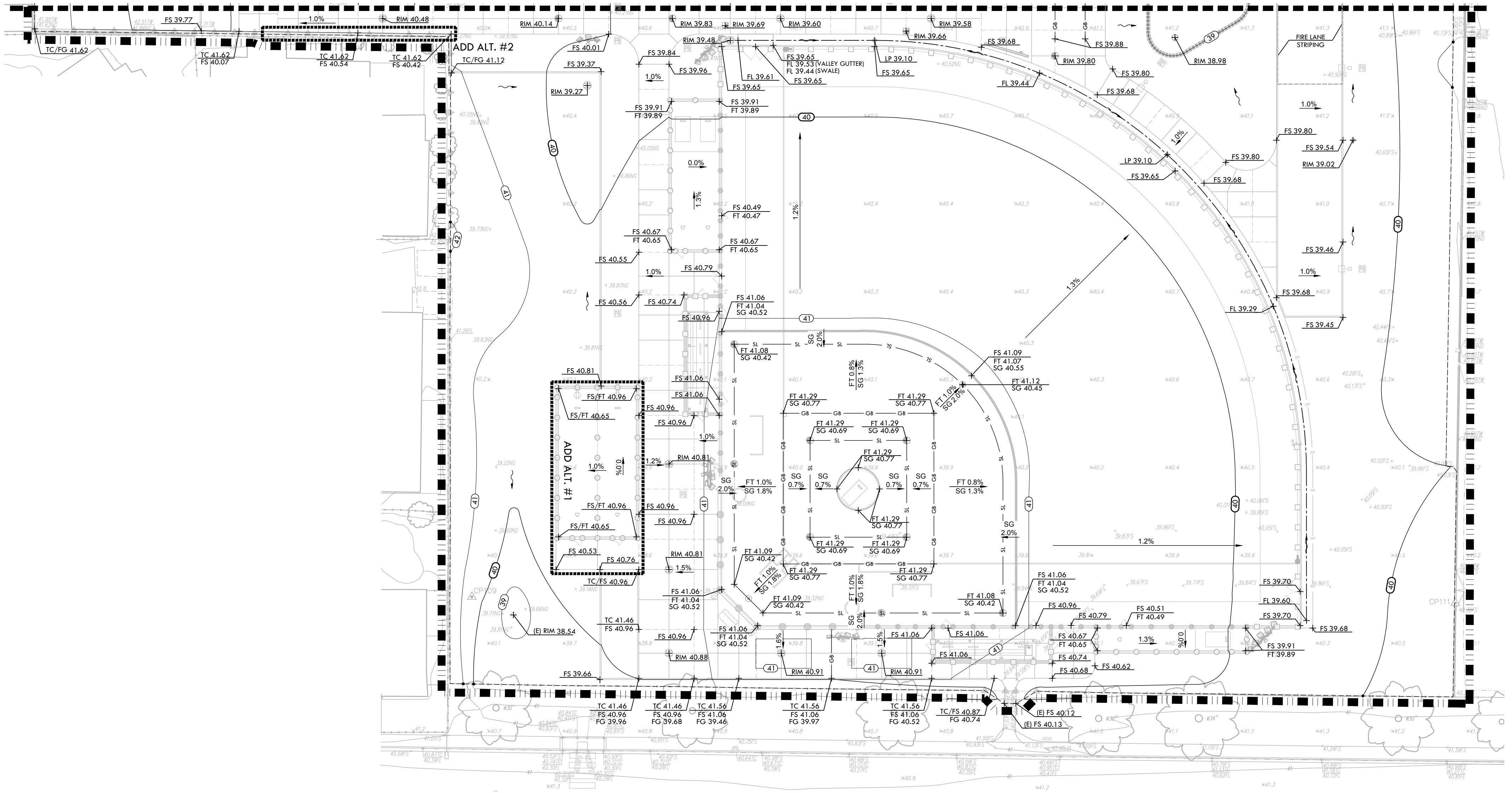
ADD ALT. #2
ADD ALT. #1
FIRE LANE STRIPING
FS 39.77
TC/FG 41.62
TC 41.62
FS 40.07
TC 41.62
FS 40.54
TC 41.62
FS 40.42
RIM 40.48
1.0%
TC/FG 41.12
RIM 40.14
FS 40.01
FS 39.37
RIM 39.27
RIM 39.83
RIM 39.48
RIM 39.69
RIM 39.60
RIM 39.58
RIM 39.66
FS 39.84
FS 39.96
FL 39.61
FS 39.65
FS 39.65
FL 39.53 (VALLEY GUTTER)
FL 39.44 (SWALE)
FS 39.65
LP 39.10
FS 39.65
FS 39.68
FS 39.88
RIM 39.80
FL 39.44
FS 39.80
FS 39.68
RIM 38.98
FS 39.91
FT 39.89
1.0%
0.0%
1.3%
1.2%
FS 40.49
FT 40.47
FS 40.67
FT 40.65
FS 40.67
FT 40.65
FS 40.55
FS 40.79
FS 40.56
FS 40.74
FS 40.96
FS 41.06
FT 41.04
SG 40.52
FT 41.08
SG 40.42
FS 41.09
FT 41.07
SG 40.55
FT 41.12
SG 40.45
FT 1.0%
SG 2.0%
FT 0.8%
SG 1.3%
FT 41.29
SG 40.77
FT 41.29
SG 40.69
SG 0.7%
FT 1.0%
SG 1.8%
FT 0.8%
SG 1.3%
FS 40.81
FS/FT 40.96
FS/FT 40.65
FS 40.53
FS 40.76
TC/FS 40.96
RIM 40.81
RIM 40.88
RIM 40.91
(E) RIM 38.54
TC 41.46
FS 40.96
FS 39.66
FG 39.96
TC 41.56
FG 39.68
FG 39.46
FG 39.97
FG 40.52
TC/FS 40.87
FG 40.74
(E) FS 40.12
(E) FS 40.13
FS 41.06
FT 41.04
SG 40.52
FT 41.08
SG 40.42
FS 40.79
FS 40.51
FT 40.49
FS 40.67
FT 40.65
FS 40.74
FS 40.68
FS 40.62
FS 39.70
FL 39.60
FS 39.70
FS 39.68
FS 39.91
FT 39.89
LP 39.10
FS 39.65
FS 39.80
FS 39.54
RIM 39.02
FS 39.68
FS 39.46
FS 39.68
FS 39.45
FL 39.29
1.3%
1.2%
1.5%
1.6%
2.0%
39
40
41
42
SL
GB
SG

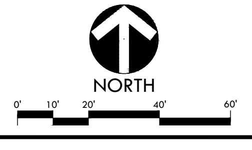
NORTH
0'
10'
20'
40'
60'

IDENTIFICATION STAMP
DIV. OF THE STATE ARCHITECT
APP: 02-123587 INC:
REVIEWED FOR
SS ☑ FLS ☑ ACS ☑
DATE: 01/16/2026

VERDE DESIGN
LANDSCAPE ARCHITECTURE
CIVIL ENGINEERING
SPORT PLANNING & DESIGN
1843 Iron Point Rd. Suite 140
Folsom, CA 95630
tel: 916.415.6554
fax: 916.415.6525
www.VerdeDesignInc.com

STAMP

REGISTERED LANDSCAPE ARCHITECT
MARK S. BAGINSKI
No. 4069
Signature
EXPIRATION DATE: JULY 2027
STATE OF CALIFORNIA

CONSULTANT

KEYMAP

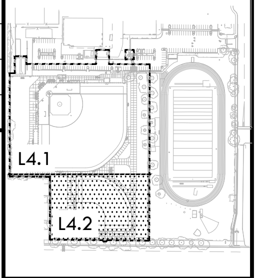

SHEET TITLE

GRADING
PLAN -
SOFTBALL FIELD

PROJECT NAME

LODI HIGH SCHOOL
ATHLETIC FIELD
IMPROVEMENTS

PROJECT ADDRESS

3 S PACIFIC AVE
LODI, CA
95242

SUBMITTAL	DATE
50% DSA SUBMITTAL	07/31/25
100% DSA SUBMITTAL	09/25/25
DSA BACKCHECK SUBMITTAL	12/17/25
DSA BACKCHECK SUBMITTAL	01/08/26

NO.	REVISIONS	DATE
△		
△		
△		
△		
△		
△		

DRAWN BY
DK

CHECKED BY
CS/MB

DATE ISSUED
01/08/2026

SCALE
1"=20'-0"

PROJ. NO.
2502700

SHEET NO.
L4.2

GRADING PLAN - SOFTBALL FIELD

DRAWING NAME: Y:\Projects-FO\2025\2502700 - Lodi HS Baseball and Softball Field\CAD_GRD.dwg
PLOT DATE: 12-15-25 PLOTTED BY: station67

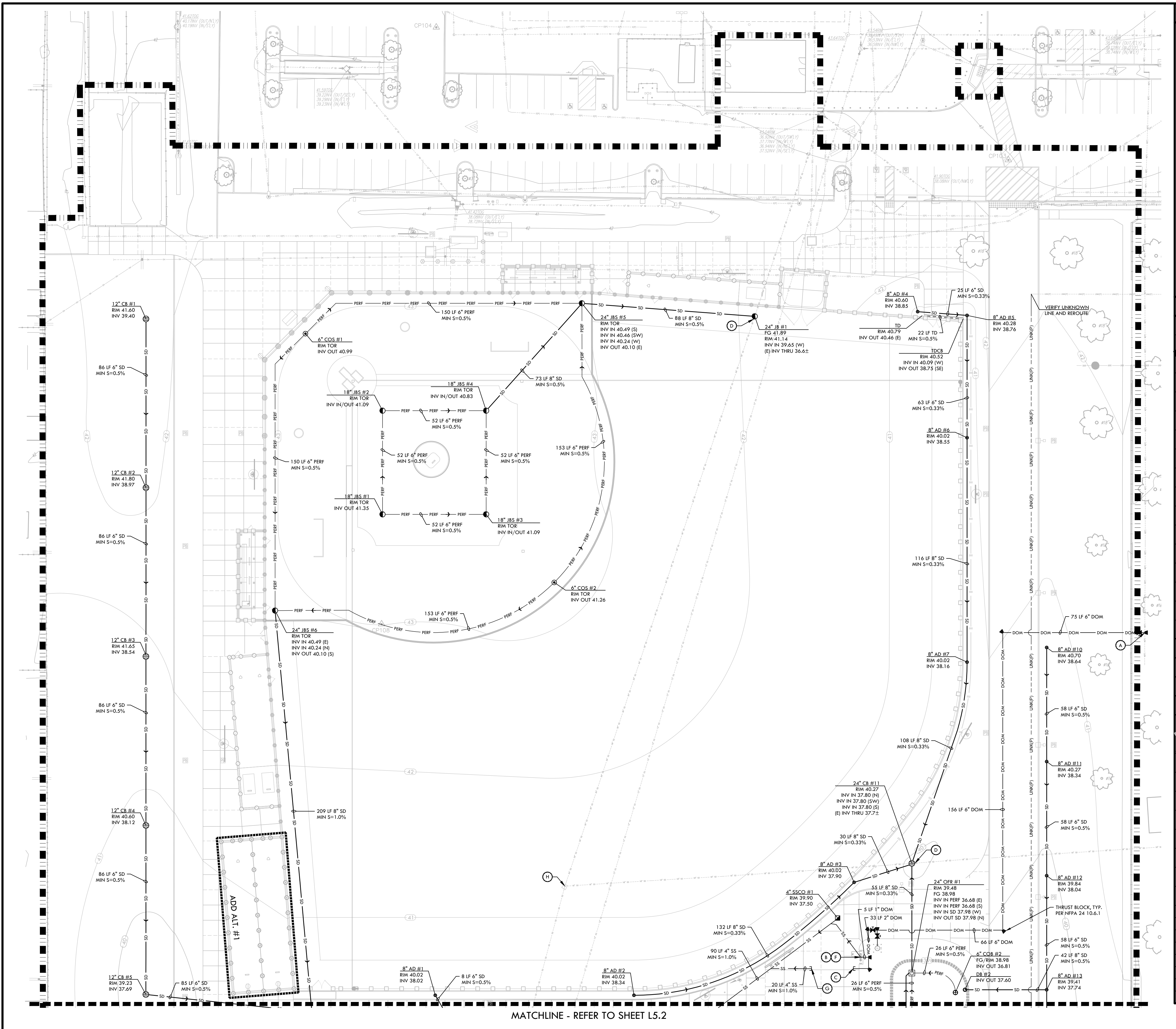
CP104
CP105
12" CB #1
RIM 41.60
INV 39.40
86 LF 6" SD
MIN S=0.5%
12" CB #2
RIM 41.80
INV 38.97
86 LF 6" SD
MIN S=0.5%
12" CB #3
RIM 41.65
INV 38.54
86 LF 6" SD
MIN S=0.5%
12" CB #4
RIM 40.60
INV 38.12
86 LF 6" SD
MIN S=0.5%
12" CB #5
RIM 39.23
INV 37.69
85 LF 6" SD
MIN S=0.5%
6" COS #1
RIM TOR
INV OUT 40.99
150 LF 6" PERF
MIN S=0.5%
150 LF 6" PERF
MIN S=0.5%
18" JBS #2
RIM TOR
INV IN/OUT 41.09
18" JBS #4
RIM TOR
INV IN/OUT 40.83
52 LF 6" PERF
MIN S=0.5%
52 LF 6" PERF
MIN S=0.5%
52 LF 6" PERF
MIN S=0.5%
52 LF 6" PERF
MIN S=0.5%
18" JBS #1
RIM TOR
INV OUT 41.35
18" JBS #3
RIM TOR
INV IN/OUT 41.09
73 LF 8" SD
MIN S=0.5%
153 LF 6" PERF
MIN S=0.5%
6" COS #2
RIM TOR
INV OUT 41.26
153 LF 6" PERF
MIN S=0.5%
CP108
24" JBS #6
RIM TOR
INV IN 40.49 (E)
INV IN 40.24 (N)
INV OUT 40.10 (S)
24" JBS #5
RIM TOR
INV IN 40.49 (S)
INV IN 40.46 (SW)
INV IN 40.24 (W)
INV OUT 40.10 (E)
88 LF 8" SD
MIN S=0.5%
D
24" JB #1
FG 41.89
RIM 41.14
INV IN 39.65 (W)
(E) INV THRU 36.6±
8" AD #4
RIM 40.60
INV 38.85
25 LF 6" SD
MIN S=0.33%
TD
RIM 40.79
INV OUT 40.46 (E)
22 LF TD
MIN S=0.5%
8" AD #5
RIM 40.28
INV 38.76
TDCB
RIM 40.52
INV IN 40.09 (W)
INV OUT 38.75 (SE)
VERIFY UNKNOWN
LINE AND REROUTE
63 LF 6" SD
MIN S=0.33%
8" AD #6
RIM 40.02
INV 38.55
116 LF 8" SD
MIN S=0.33%
75 LF 6" DOM
A
8" AD #7
RIM 40.02
INV 38.16
8" AD #10
RIM 40.70
INV 38.64
58 LF 6" SD
MIN S=0.5%
108 LF 8" SD
MIN S=0.33%
8" AD #11
RIM 40.27
INV 38.34
24" CB #11
RIM 40.27
INV IN 37.80 (N)
INV IN 37.80 (SW)
INV IN 37.80 (S)
(E) INV THRU 37.7±
156 LF 6" DOM
58 LF 6" SD
MIN S=0.5%
209 LF 8" SD
MIN S=1.0%
30 LF 8" SD
MIN S=0.33%
D
H
8" AD #3
RIM 40.02
INV 37.90
8" AD #12
RIM 39.84
INV 38.04
4" SSCO #1
RIM 39.90
INV 37.50
55 LF 8" SD
MIN S=0.33%
24" OFR #1
RIM 39.48
FG 38.98
INV IN PERF 36.68 (E)
INV IN PERF 36.68 (S)
INV IN SD 37.98 (W)
INV OUT SD 37.98 (N)
5 LF 1" DOM
33 LF 2" DOM
THRUST BLOCK, TYP.
PER NFPA 24 10.6.1
132 LF 8" SD
MIN S=0.33%
66 LF 6" DOM
90 LF 4" SS
MIN S=1.0%
B
F
26 LF 6" PERF
MIN S=0.5%
6" COB #2
FG/RIM 38.98
INV OUT 36.81
58 LF 6" SD
MIN S=0.5%
42 LF 8" SD
MIN S=0.5%
ADD ALT. #1
8" AD #1
RIM 40.02
INV 38.02
8 LF 6" SD
MIN S=0.5%
8" AD #2
RIM 40.02
INV 38.34
20 LF 4" SS
MIN S=1.0%
C
G
26 LF 6" PERF
MIN S=0.5%
DB #2
INV OUT 37.60
8" AD #13
RIM 39.41
INV 37.74
SD
PERF
SS
DOM
UNK(P)
MATCHLINE - REFER TO SHEET L5.2

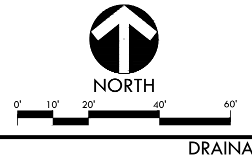
NORTH
0'
10'
20'
40'
60'

DRAINAGE & UTILITY NOTES

1. THE CONTRACTOR SHALL VERIFY THE LOCATIONS OF ALL EXISTING UTILITIES, STRUCTURES, AND SERVICES BEFORE COMMENCING WORK. THE LOCATIONS OF UTILITIES, STRUCTURES, AND SERVICES SHOWN IN THE CONTRACT DOCUMENTS SHALL BE DEEMED TO BE APPROXIMATIONS ONLY. ALL DISCREPANCIES BETWEEN WHAT IS SHOWN AND THE ACTUAL FIELD CONDITIONS SHALL BE REPORTED TO THE DISTRICT REPRESENTATIVE. THE CONTRACTOR SHALL CONTACT UNDER GROUND SERVICE ALERT (USA) AT (800) 227-2600 PRIOR TO ANY DEMOLITION OR EXCAVATION. UPON COMPLETION OF USA MARKING OPERATIONS, CONTRACTOR SHALL RECORD ALL UTILITY MARKINGS ON A SEPARATE SET OF DRAWINGS. THIS SET SHALL BE KEPT ON-SITE FOR REFERENCE FOR DURATION OF CONTRACT.

2. ALL EXISTING DRAINAGE STRUCTURES, BOXES, UTILITY VAULTS ETC. TO REMAIN, SHALL BE BROUGHT TO FINAL FINISH GRADE PRIOR TO FINAL SURFACE TREATMENT.

3. THE CONTRACTOR IS TO PROTECT DRAINAGE SYSTEM FROM DEBRIS, INCLUDING SOIL, ROCK MATERIAL, AND TRASH FROM ENTERING THE PIPE DURING CONSTRUCTION. CONTRACTOR SHALL AVOID PLACING CONSTRUCTION VEHICLES OVER INSTALLED DRAINAGE TRENCHES TO PREVENT CRUSHING OF PIPE.

4. COORDINATE ALL SLEEVING AND UTILITY LOCATIONS AS SHOWN ON THE PLANS AND DETAILS CONTAINED WITHIN THESE CONTRACT DOCUMENTS.

5. THE CONTRACTOR IS TO ENSURE THAT ALL REMAINING ACTIVE AND NEW DRAINAGE AND UTILITY LINES ARE PROTECTED AND UNDAMAGED FROM TRENCHING AND FOOTING EXCAVATIONS FOR NEW FOOTINGS, PARTICULARLY FOR NEW FENCING AND WALLS.

6. ALL ABANDONED STORM LINES SHALL REMAIN IN PLACE UNLESS IN CONFLICT WITH PROPOSED DRAINAGE, UTILITY, OR SUBGRADING OPERATIONS, IN WHICH CASE ABANDONED PIPE IN CONFLICT SHALL BE REMOVED. REMAINING ABANDONED STORM PIPE SHALL BE SEALED WITH APPROPRIATELY SIZED CONCRETE CAP (3 SACK MIX) 6" ENVELOPE OUTSIDE AND INSIDE DIAMETER OF PIPE.

7. PRIOR TO ALL DRAINAGE AND UTILITY WORK, CONTRACTOR SHALL BE RESPONSIBLE FOR VERIFYING ALL POTENTIAL DRAINAGE CONNECTIONS AND EXISTING UTILITY BY POTHOLING. IN ADDITION, ALL DOWNSTREAM CONNECTIONS TO EXISTING STRUCTURES SHALL BE THE START OF THESE OPERATIONS, AND GRADES SHALL BE VERIFIED.

8. WHEN WORK HAS TO OCCUR UNDER THE DRIPLINE OF EXISTING TREES NOT SCHEDULED FOR REMOVAL, THE CONTRACTOR SHALL USE ALL POSSIBLE CARE TO AVOID INJURY TO THE TREES AND TREE ROOTS. GRADE IN LINES RADIAL TO THE EXISTING TREES RATHER THAN TANGENTIAL. ALL PARTIAL CUTS OR TEARS THROUGH ROOTS TWO INCHES IN DIAMETER AND LARGER SHALL BE CUT CLEAN. TRENCHES ADJACENT TO TREES SHALL BE FILLED WITHIN 24 HOURS AFTER EXCAVATION, BUT WHERE THIS IS NOT POSSIBLE, THE SIDE OF THE TRENCH ADJACENT TO THE TREE, AND ANY EXPOSED ROOTS SHALL BE KEPT SHADED AND MOIST WITH DAMPENED BURLAP OR CANVAS.

DRAINAGE & UTILITY LEGEND

SYM	DESCRIPTION	DETAIL NUMBER / SHEET NUMBER
▚	LIMIT OF WORK	
⊜	CATCH BASIN, SIZE PER PLAN (CB)	B / D1.1
●	AREA DRAIN, SIZE PER PLAN (AD)	O / D1.1
◐	JUNCTION BOX, SIZE PER PLAN (JB)	B,C / D1.1
◐	JUNCTION BOX IN SYNTHETIC TURF, SIZE PER PLAN (JBS)	D / D1.1
⊙	CLEANOUT IN SYNTHETIC TURF (COS)	G / D1.1
⊕	CLEANOUT IN BIORETENTION AREA (COB)	K / D1.1
◑	CLEANOUT IN SOFTSCAPE (CO)	E / D1.1
◪	SANITARY SEWER CLEANOUT (SSCO)	I / D1.1
⧓	NIBCO GATE VALVES 2" AND SMALLER SHALL BE NIBCO T-113 LF. FOR VALVES ABOVE 2" IN SIZE UTILIZE NIBCO F-619 FLANGED VALVE WITH SQUARE OPERATING NUT.	
▣	OVERFLOW RISER (OFR) WITH GRATE/STANDPIPE AT BIORETENTION AREA, SIZE PER PLAN	N / D1.1
◀	ENERGY DISSIPATOR (ED)	L / D1.1
○	DRAINAGE BUBBLER (DB)	R / D1.1
N	FIRE HYDRANT	B / D1.2
◀	THRUST BLOCK	D / D1.2
SD	SOLID WALL STORM DRAIN	A / D1.1
PERF	PERFORATED SUBDRAIN LINE	H / D1.1
FD	FRENCH DRAIN	Q / D1.1
SS	SANITARY SEWER LINE	A / D1.1
DOM	DOMESTIC WATER LINE	A / D1.1
▨	BIORETENTION AREA (BOTTOM OF BIORETENTION BASIN)	M / D1.1
▭	TRENCH DRAIN (TD)	J / D1.1
Ⓐ	DOMESTIC WATER POINT OF CONNECTION. CONTRACTOR TO VERIFY LOCATION PRIOR TO INITIATING DRAINAGE IMPROVEMENTS. ANY DISCREPANCY TO BE PROVIDED TO DISTRICT IN WRITING.	
Ⓑ	DOMESTIC WATER CONNECTION TO DRINKING FOUNTAIN	
Ⓒ	DOMESTIC WATER STUB FOR FUTURE CONNECTION	
Ⓓ	STORM DRAIN POINT OF CONNECTION. CONTRACTOR TO VERIFY LOCATION AND INVERT ELEVATION PRIOR TO INITIATING DRAINAGE IMPROVEMENTS. ANY DISCREPANCY TO BE PROVIDED TO DISTRICT IN WRITING.	
Ⓔ	SANITARY SEWER POINT OF CONNECTION. CONTRACTOR TO VERIFY LOCATION AND INVERT ELEVATION PRIOR TO INITIATING DRAINAGE IMPROVEMENTS. ANY DISCREPANCY TO BE PROVIDED TO DISTRICT IN WRITING.	
Ⓕ	SANITARY SEWER CONNECTION TO DRINKING FOUNTAIN	
Ⓖ	SANITARY SEWER STUB FOR FUTURE CONNECTION	
Ⓗ	PROTECT (E) STRUCTURE, REPLACE GRATE WITH SOLID LID AND BURY IN PLACE.	
(E)	EXISTING	
INV	INVERT	
LF	LINEAR FEET	
MIN	MINIMUM	
RIM	RIM ELEVATION	
S=0.5%	SLOPE	
TOR	TOP OF ROCK	
N, S, W, E	NORTH, SOUTH, WEST, EAST	

IDENTIFICATION STAMP
DIV. OF THE STATE ARCHITECT
APP: 02-123587 INC:
REVIEWED FOR
SS ☑ FLS ☑ ACS ☑
DATE: 01/16/2026

VERDE DESIGN
LANDSCAPE ARCHITECTURE
CIVIL ENGINEERING
SPORT PLANNING & DESIGN
1843 Iron Point Rd. Suite 140
Folsom, CA 95630
tel: 916.415.6554
fax: 916.415.6525
www.VerdeDesignInc.com

STAMP

REGISTERED LANDSCAPE ARCHITECT
MARK S. BAGINSKI
No. 4089
Signature
EXPIRATION DATE:
JULY 2027
STATE OF CALIFORNIA

CONSULTANT

KEYMAP

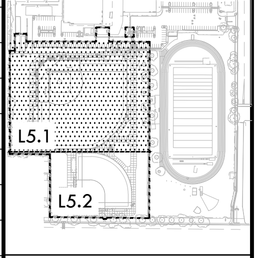

SHEET TITLE
DRAINAGE AND UTILITY PLAN - BASEBALL FIELD

PROJECT NAME
LODI HIGH SCHOOL ATHLETIC FIELD IMPROVEMENTS

PROJECT ADDRESS
3 S PACIFIC AVE
LODI, CA
95242

SUBMITTAL	DATE
50% DSA SUBMITTAL	07/31/25
100% DSA SUBMITTAL	09/25/25
DSA BACKCHECK SUBMITTAL	12/17/25
DSA BACKCHECK SUBMITTAL	01/08/26

NO.	REVISIONS	DATE
△		
△		
△		
△		
△		
△		

DRAWN BY DK	CHECKED BY CS/MB
DATE ISSUED 01/08/2026	SCALE 1"=20'-0"
PROJ. NO. 2502700	
SHEET NO. L5.1	

ALL IDEAS, DESIGNS, ARRANGEMENTS, AND PLANS INDICATED OR REPRESENTED BY THIS DRAWING ARE OWNED BY AND THE PROPERTY OF VERDE DESIGN, INC. AND WERE CREATED, EVOLVED, AND DEVELOPED FOR USE ON AND IN CONNECTION WITH THE SPECIFIED PROJECT. NONE OF SUCH IDEAS, DESIGNS, ARRANGEMENTS OR PLANS SHALL BE USED, REPRODUCED, OR PUBLISHED BY ANY METHOD, IN WHOLE OR IN PART, OR DISCLOSED TO ANY PERSON, FIRM, OR CORPORATION FOR ANY PURPOSE WHATSOEVER WITHOUT WRITTEN PERMISSION OF VERDE DESIGN, INC.

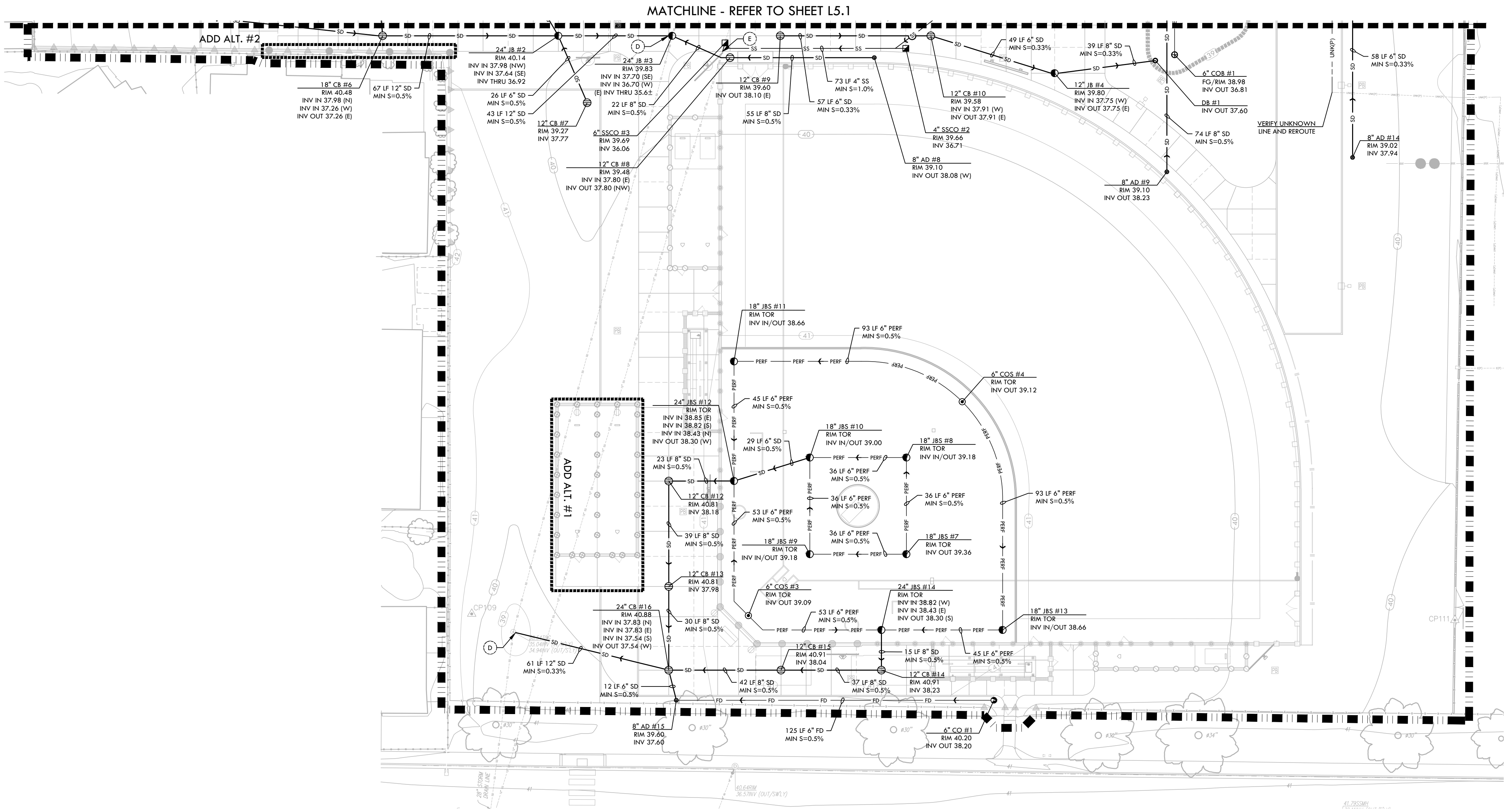
MATCHLINE - REFER TO SHEET L5.1
ADD ALT. #2
ADD ALT. #1
18" CB #6
RIM 40.48
INV IN 37.98 (N)
INV IN 37.26 (W)
INV OUT 37.26 (E)
67 LF 12" SD
MIN S=0.5%
24" JB #2
RIM 40.14
INV IN 37.98 (NW)
INV IN 37.64 (SE)
INV THRU 36.92
26 LF 6" SD
MIN S=0.5%
43 LF 12" SD
MIN S=0.5%
12" CB #7
RIM 39.27
INV 37.77
24" JB #3
RIM 39.83
INV IN 37.70 (SE)
INV IN 36.70 (W)
(E) INV THRU 35.6±
22 LF 8" SD
MIN S=0.5%
6" SSCO #3
RIM 39.69
INV 36.06
12" CB #8
RIM 39.48
INV IN 37.80 (E)
INV OUT 37.80 (NW)
D
E
12" CB #9
RIM 39.60
INV OUT 38.10 (E)
55 LF 8" SD
MIN S=0.5%
57 LF 6" SD
MIN S=0.33%
73 LF 4" SS
MIN S=1.0%
4" SSCO #2
RIM 39.66
INV 36.71
8" AD #8
RIM 39.10
INV OUT 38.08 (W)
12" CB #10
RIM 39.58
INV IN 37.91 (W)
INV OUT 37.91 (E)
49 LF 6" SD
MIN S=0.33%
39 LF 8" SD
MIN S=0.33%
12" JB #4
RIM 39.80
INV IN 37.75 (W)
INV OUT 37.75 (E)
6" COB #1
FG/RIM 38.98
INV OUT 36.81
DB #1
INV OUT 37.60
74 LF 8" SD
MIN S=0.5%
8" AD #9
RIM 39.10
INV OUT 38.23
VERIFY UNKNOWN
LINE AND REROUTE
UNK(P)
58 LF 6" SD
MIN S=0.33%
8" AD #14
RIM 39.02
INV 37.94
18" JBS #11
RIM TOR
INV IN/OUT 38.66
93 LF 6" PERF
MIN S=0.5%
6" COS #4
RIM TOR
INV OUT 39.12
45 LF 6" PERF
MIN S=0.5%
24" JBS #12
RIM TOR
INV IN 38.85 (E)
INV IN 38.82 (S)
INV IN 38.43 (N)
INV OUT 38.30 (W)
29 LF 6" SD
MIN S=0.5%
23 LF 8" SD
MIN S=0.5%
18" JBS #10
RIM TOR
INV IN/OUT 39.00
18" JBS #8
RIM TOR
INV IN/OUT 39.18
36 LF 6" PERF
MIN S=0.5%
36 LF 6" PERF
MIN S=0.5%
36 LF 6" PERF
MIN S=0.5%
36 LF 6" PERF
MIN S=0.5%
12" CB #12
RIM 40.81
INV 38.18
53 LF 6" PERF
MIN S=0.5%
93 LF 6" PERF
MIN S=0.5%
39 LF 8" SD
MIN S=0.5%
18" JBS #9
RIM TOR
INV IN/OUT 39.18
18" JBS #7
RIM TOR
INV OUT 39.36
12" CB #13
RIM 40.81
INV 37.98
6" COS #3
RIM TOR
INV OUT 39.09
24" JBS #14
RIM TOR
INV IN 38.82 (W)
INV IN 38.43 (E)
INV OUT 38.30 (S)
53 LF 6" PERF
MIN S=0.5%
18" JBS #13
RIM TOR
INV IN/OUT 38.66
24" CB #16
RIM 40.88
INV IN 37.83 (N)
INV IN 37.83 (E)
INV IN 37.54 (S)
INV OUT 37.54 (W)
30 LF 8" SD
MIN S=0.5%
12" CB #15
RIM 40.91
INV 38.04
15 LF 8" SD
MIN S=0.5%
45 LF 6" PERF
MIN S=0.5%
61 LF 12" SD
MIN S=0.33%
42 LF 8" SD
MIN S=0.5%
37 LF 8" SD
MIN S=0.5%
12" CB #14
RIM 40.91
INV 38.23
12 LF 6" SD
MIN S=0.5%
8" AD #15
RIM 39.60
INV 37.60
125 LF 6" FD
MIN S=0.5%
6" CO #1
RIM 40.20
INV OUT 38.20
CP109
CP111
28" STORM DRAIN LINE
40.64RIM
36.57INV (OUT/SW'LY)
SD
SS
PERF
FD
PB
40
41
42
39
ø30"

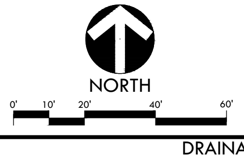
NORTH
0'
10'
20'
40'
60'

DRAINAGE & UTILITY NOTES

1. THE CONTRACTOR SHALL VERIFY THE LOCATIONS OF ALL EXISTING UTILITIES, STRUCTURES, AND SERVICES BEFORE COMMENCING WORK. THE LOCATIONS OF UTILITIES, STRUCTURES, AND SERVICES SHOWN IN THE CONTRACT DOCUMENTS SHALL BE DEEMED TO BE APPROXIMATIONS ONLY. ALL DISCREPANCIES BETWEEN WHAT IS SHOWN AND THE ACTUAL FIELD CONDITIONS SHALL BE REPORTED TO THE DISTRICT REPRESENTATIVE. THE CONTRACTOR SHALL CONTACT UNDER GROUND SERVICE ALERT (USA) AT (800) 227-2600 PRIOR TO ANY DEMOLITION OR EXCAVATION. UPON COMPLETION OF USA MARKING OPERATIONS, CONTRACTOR SHALL RECORD ALL UTILITY MARKINGS ON A SEPARATE SET OF DRAWINGS. THIS SET SHALL BE KEPT ON-SITE FOR REFERENCE FOR DURATION OF CONTRACT.

2. ALL EXISTING DRAINAGE STRUCTURES, BOXES, UTILITY VAULTS ETC. TO REMAIN, SHALL BE BROUGHT TO FINAL FINISH GRADE PRIOR TO FINAL SURFACE TREATMENT.

3. THE CONTRACTOR IS TO PROTECT DRAINAGE SYSTEM FROM DEBRIS, INCLUDING SOIL, ROCK MATERIAL, AND TRASH FROM ENTERING THE PIPE DURING CONSTRUCTION. CONTRACTOR SHALL AVOID PLACING CONSTRUCTION VEHICLES OVER INSTALLED DRAINAGE TRENCHES TO PREVENT CRUSHING OF PIPE.

4. COORDINATE ALL SLEEVING AND UTILITY LOCATIONS AS SHOWN ON THE PLANS AND DETAILS CONTAINED WITHIN THESE CONTRACT DOCUMENTS.

5. THE CONTRACTOR IS TO ENSURE THAT ALL REMAINING ACTIVE AND NEW DRAINAGE AND UTILITY LINES ARE PROTECTED AND UNDAMAGED FROM TRENCHING AND FOOTING EXCAVATIONS FOR NEW FOOTINGS, PARTICULARLY FOR NEW FENCING AND WALLS.

6. ALL ABANDONED STORM LINES SHALL REMAIN IN PLACE UNLESS IN CONFLICT WITH PROPOSED DRAINAGE, UTILITY, OR SUBGRADING OPERATIONS, IN WHICH CASE ABANDONED PIPE IN CONFLICT SHALL BE REMOVED. REMAINING ABANDONED STORM PIPE SHALL BE SEALED WITH APPROPRIATELY SIZED CONCRETE CAP (3 SACK MIX) 6" ENVELOPE OUTSIDE AND INSIDE DIAMETER OF PIPE.

7. PRIOR TO ALL DRAINAGE AND UTILITY WORK, CONTRACTOR SHALL BE RESPONSIBLE FOR VERIFYING ALL POTENTIAL DRAINAGE CONNECTIONS AND EXISTING UTILITY BY POTHOLING. IN ADDITION, ALL DOWNSTREAM CONNECTIONS TO EXISTING STRUCTURES SHALL BE THE START OF THESE OPERATIONS, AND GRADES SHALL BE VERIFIED.

8. WHEN WORK HAS TO OCCUR UNDER THE DRIPLINE OF EXISTING TREES NOT SCHEDULED FOR REMOVAL, THE CONTRACTOR SHALL USE ALL POSSIBLE CARE TO AVOID INJURY TO THE TREES AND TREE ROOTS. GRADE IN LINES RADIAL TO THE EXISTING TREES RATHER THAN TANGENTIAL. ALL PARTIAL CUTS OR TEARS THROUGH ROOTS TWO INCHES IN DIAMETER AND LARGER SHALL BE CUT CLEAN. TRENCHES ADJACENT TO TREES SHALL BE FILLED WITHIN 24 HOURS AFTER EXCAVATION, BUT WHERE THIS IS NOT POSSIBLE, THE SIDE OF THE TRENCH ADJACENT TO THE TREE, AND ANY EXPOSED ROOTS SHALL BE KEPT SHADED AND MOIST WITH DAMPENED BURLAP OR CANVAS.

DRAINAGE & UTILITY LEGEND

SYM	DESCRIPTION	DETAIL NUMBER / SHEET NUMBER
▬ ▬	LIMIT OF WORK	
⊜	CATCH BASIN, SIZE PER PLAN (CB)	B / D1.1
●	AREA DRAIN, SIZE PER PLAN (AD)	O / D1.1
◐	JUNCTION BOX, SIZE PER PLAN (JB)	B,C / D1.1
◐	JUNCTION BOX IN SYNTHETIC TURF, SIZE PER PLAN (JBS)	D / D1.1
⊙	CLEANOUT IN SYNTHETIC TURF (COS)	G / D1.1
⊕	CLEANOUT IN BIORETENTION AREA (COB)	K / D1.1
◓	CLEANOUT IN SOFTSCAPE (CO)	E / D1.1
◪	SANITARY SEWER CLEANOUT (SSCO)	I / D1.1
⧓	NIBCO GATE VALVES 2" AND SMALLER SHALL BE NIBCO T-113 LF. FOR VALVES ABOVE 2" IN SIZE UTILIZE NIBCO F-619 FLANGED VALVE WITH SQUARE OPERATING NUT.	
◎	OVERFLOW RISER (OFR) WITH GRATE/STANDPIPE AT BIORETENTION AREA, SIZE PER PLAN	N / D1.1
◀	ENERGY DISSIPATOR (ED)	L / D1.1
○	DRAINAGE BUBBLER (DB)	R / D1.1
Ⓝ	FIRE HYDRANT	B / D1.2
◀	THRUST BLOCK	D / D1.2
SD	SOLID WALL STORM DRAIN	A / D1.1
PERF	PERFORATED SUBDRAIN LINE	H / D1.1
FD	FRENCH DRAIN	Q / D1.1
SS	SANITARY SEWER LINE	A / D1.1
DOM	DOMESTIC WATER LINE	A / D1.1
▨	BIORETENTION AREA (BOTTOM OF BIORETENTION BASIN)	M / D1.1
═	TRENCH DRAIN (TD)	J / D1.1
Ⓐ	DOMESTIC WATER POINT OF CONNECTION. CONTRACTOR TO VERIFY LOCATION PRIOR TO INITIATING DRAINAGE IMPROVEMENTS. ANY DISCREPANCY TO BE PROVIDED TO DISTRICT IN WRITING.	
Ⓑ	DOMESTIC WATER CONNECTION TO DRINKING FOUNTAIN	
Ⓒ	DOMESTIC WATER STUB FOR FUTURE CONNECTION	
Ⓓ	STORM DRAIN POINT OF CONNECTION. CONTRACTOR TO VERIFY LOCATION AND INVERT ELEVATION PRIOR TO INITIATING DRAINAGE IMPROVEMENTS. ANY DISCREPANCY TO BE PROVIDED TO DISTRICT IN WRITING.	
Ⓔ	SANITARY SEWER POINT OF CONNECTION. CONTRACTOR TO VERIFY LOCATION AND INVERT ELEVATION PRIOR TO INITIATING DRAINAGE IMPROVEMENTS. ANY DISCREPANCY TO BE PROVIDED TO DISTRICT IN WRITING.	
Ⓕ	SANITARY SEWER CONNECTION TO DRINKING FOUNTAIN	
Ⓖ	SANITARY SEWER STUB FOR FUTURE CONNECTION	
Ⓗ	PROTECT (E) STRUCTURE, REPLACE GRATE WITH SOLID LID AND BURY IN PLACE.	
(E)	EXISTING	
INV	INVERT	
LF	LINEAR FEET	
MIN	MINIMUM	
RIM	RIM ELEVATION	
S=0.5%	SLOPE	
TOR	TOP OF ROCK	
N, S, W, E	NORTH, SOUTH, WEST, EAST	

IDENTIFICATION STAMP
DIV. OF THE STATE ARCHITECT
APP: 02-123587 INC:
REVIEWED FOR
SS ☑ FLS ☑ ACS ☑
DATE: 01/16/2026

VERDE DESIGN
LANDSCAPE ARCHITECTURE
CIVIL ENGINEERING
SPORT PLANNING & DESIGN
1843 Iron Point Rd. Suite 140
Folsom, CA 95630
tel: 916.415.6554
fax: 916.415.6525
www.VerdeDesignInc.com

STAMP

MARK S. BAGINSKI
No. 4089
EXPIRATION DATE: JULY 2027

CONSULTANT

KEYMAP

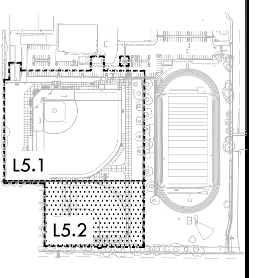

SHEET TITLE

DRAINAGE AND
UTILITY PLAN -
SOFTBALL FIELD

PROJECT NAME

LODI HIGH SCHOOL
ATHLETIC FIELD
IMPROVEMENTS

PROJECT ADDRESS

3 S PACIFIC AVE
LODI, CA
95242

SUBMITTAL	DATE
50% DSA SUBMITTAL	07/31/25
100% DSA SUBMITTAL	09/25/25
DSA BACKCHECK SUBMITTAL	12/17/25
DSA BACKCHECK SUBMITTAL	01/08/26

NO.	REVISIONS	DATE
△		
△		
△		
△		
△		
△		

DRAWN BY DK	CHECKED BY CS/MB
DATE ISSUED 01/08/2026	SCALE 1"=20'-0"
PROJ. NO. 2502700	
SHEET NO. L5.2	

DRAINAGE AND UTILITY PLAN - SOFTBALL FIELD

ALL IDEAS, DESIGNS, ARRANGEMENTS, AND PLANS INDICATED OR REPRESENTED BY THIS DRAWING ARE OWNED BY AND THE PROPERTY OF VERDE DESIGN, INC. AND WERE CREATED, EVOLVED, AND DEVELOPED FOR USE ON AND IN CONNECTION WITH THE SPECIFIED PROJECT. NONE OF SUCH IDEAS, DESIGNS, ARRANGEMENTS OR PLANS SHALL BE USED, REPRODUCED, OR PUBLISHED BY ANY METHOD, IN WHOLE OR IN PART, OR DISCLOSED TO ANY PERSON, FIRM, OR CORPORATION FOR ANY PURPOSE WHATSOEVER WITHOUT WRITTEN PERMISSION OF VERDE DESIGN, INC.

DRAWING NAME: Y:\Projects-FO\2025\2502700 - Lodi HS Baseball and Softball Field\CAD_DRN.dwg
PLOT DATE: 12-15-25 PLOTTED BY: station67

ALL IDEAS, DESIGNS, ARRANGEMENTS, AND PLANS INDICATED OR REPRESENTED BY THIS DRAWING ARE OWNED BY AND THE PROPERTY OF VERDE DESIGN, INC. AND WERE CREATED, EVOLVED, AND DEVELOPED FOR USE ON AND IN CONNECTION WITH THE SPECIFIED PROJECT. NONE OF SUCH IDEAS, DESIGNS, ARRANGEMENTS OR PLANS SHALL BE USED, REPRODUCED, OR DISCLOSED TO ANY PERSON, FIRM, OR CORPORATION FOR ANY PURPOSE WHATSOEVER WITHOUT WRITTEN PERMISSION OF VERDE DESIGN, INC.

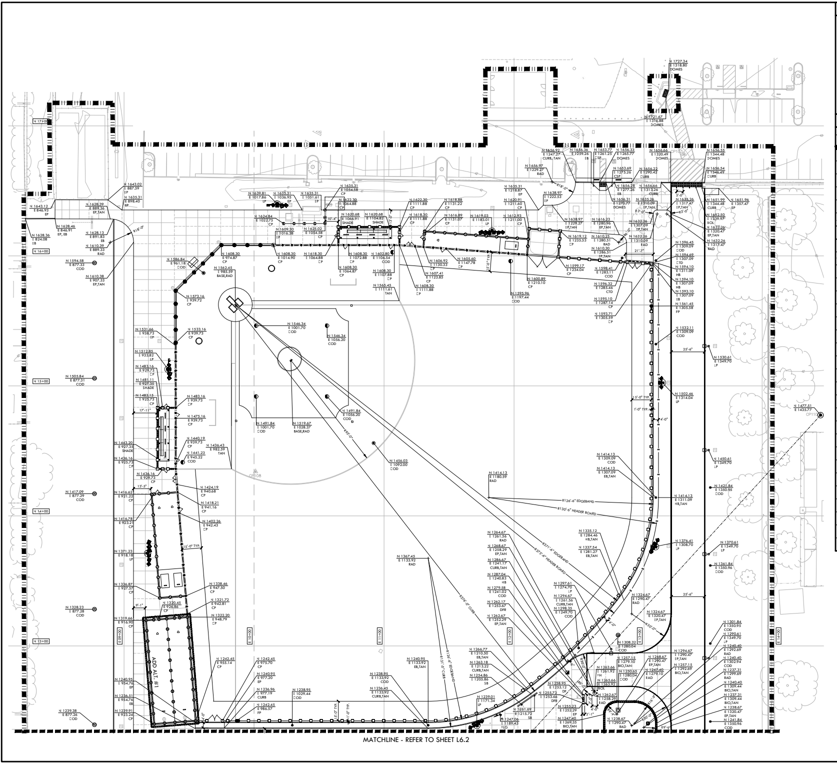
N 1727.34
E 1318.80
DOMES
N 1721.67
E 1316.88
DOMES
N 17+00
N 16+00
N 15+00
N 14+00
N 13+00
E 10+00
E 11+00
E 12+00
E 13+00
E 14+00
E 9+00
N 1643.02
E 887.59
EP
N 1635.31
E 898.40
EP
N 1643.12
E 846.93
EP
N 1628.39
E 889.36
EP,TAN
N 1628.46
E 846.91
EP, EB
N 1628.13
E 891.83
EB
N 1628.36
E 824.08
EB
N 1610.39
E 889.33
RAD
R18'-0"
N 1594.58
E 877.33
COD
N 1610.38
E 907.33
EP,TAN
N 1639.81
E 1017.86
LP
N 1635.31
E 1036.95
EP
N 1635.31
E 1051.61
EP
N 1635.31
E 1054.58
CP
N 1622.30
E 1064.88
CP
N 1624.84
E 1022.75
CP
N 1609.30
E 1016.38
CP
N 1625.02
E 1054.58
CP
10'-4"
N 1620.68
E 1066.91
SHADE
N 1620.68
E 1104.82
SHADE
N 1622.30
E 1111.88
CP
N 1618.88
E 1131.22
CP
N 1618.30
E 1111.88
CP
N 1616.89
E 1131.07
CP
N 1619.03
E 1183.01
LP
N 1612.93
E 1211.00
CP
N 1620.91
E 1211.60
CP
N 1635.31
E 1218.87
EP
N 1638.97
E 1222.53
EP
N 1656.97
E 1229.27
RAD
R18'-0"
N 1656.92
E 1247.27
CURB,TAN
N 1656.36
E 1259.26
EB
N 1653.77
E 1261.25
CSP
N 1656.33
E 1265.77
DOMES
N 1656.66
E 1320.49
DOMES
N 1656.55
E 1344.48
DOMES
N 1656.54
E 1346.49
CURB
N 1653.69
E 1275.26
CSP
N 1656.22
E 1290.42
CURB
N 1656.28
E 1277.26
EB
N 1656.66
E 1313.26
CURB
N 1656.31
E 1270.77
DOMES
N 1635.26
E 1310.09
CP,TAN
N 1635.26
E 1317.47
EP,TAN
N 1651.99
E 1344.48
CURB
N 1651.96
E 1357.47
EP
5'-0"
5'-0"
3'-0"
3'-0"
N 1652.50
E 1339.97
BOL
N 1632.26
E 1320.47
EP,TAN
N 1632.26
E 1317.47
RAD
N 1638.97
E 1229.27
EP,TAN
N 1616.23
E 1280.96
COD
N 1632.26
E 1307.09
CP,TAN
N 1619.12
E 1235.53
CP
N 1610.25
E 1280.51
CP
N 1632.26
E 1310.09
RAD
N 1610.30
E 1286.51
EP,TAN
21'-7"
N 1608.30
E 974.87
CP
N 1608.30
E 1014.90
CP
N 1618.30
E 1064.88
CP
N 1608.30
E 1072.88
CP
N 1602.80
E 1106.54
COD
N 1608.30
E 1064.87
CP
N 1608.30
E 1107.88
CP
N 1565.45
E 1111.61
TAN
N 1606.92
E 1130.33
CP
N 1607.41
E 1123.85
CP
N 1608.30
E 1111.88
CP
N 1605.60
E 1147.78
CP
15'-0" TYP.
N 1599.17
E 1234.04
CP
N 1600.89
E 1210.10
CP
N 1598.41
E 1283.11
COD
N 1596.45
E 1309.09
COD
N 1594.69
E 1307.09
CTD
N 1594.10
E 1311.09
HB
N 1594.10
E 1307.09
HB
N 1593.10
E 1307.09
EB
N 1596.32
E 1285.46
CTD
N 1595.10
E 1287.14
CP
N 1595.96
E 1197.44
COD
N 1561.45
E 1305.58
FP
N 1593.71
E 1305.59
CP
N 1586.84
E 961.18
COD
N 1562.45
E 985.59
BASE,RAD
N 1573.16
E 939.72
CP
N 1546.34
E 1001.70
COD
N 1546.34
E 1056.20
COD
N 1531.66
E 938.73
EP
N 1533.16
E 939.73
CP
N 1512.85
E 933.82
LP
N 1483.16
E 929.73
CP
N 1481.11
E 927.35
SHADE
N 1483.15
E 925.73
CP
N 1483.16
E 939.73
CP
17'-11"
N 1475.16
E 939.73
CP
N 1505.84
E 877.31
COD
N 1491.84
E 1056.20
COD
N 1491.84
E 1001.70
COD
N 1519.67
E 1028.37
BASE,RAD
R95'-0"
N 1532.11
E 1309.09
COD
25'-6"
N 1530.61
E 1349.70
LP
N 1502.46
E 1314.04
LP
15'-0" TYP.
1'-0" TYP.
4'-0"
N 1477.51
E 1435.77
CP110
N 1443.20
E 927.35
SHADE
N 1440.19
E 939.73
CP
N 1436.43
E 982.59
TAN
N 1441.23
E 945.22
COD
N 1436.16
E 925.73
CP
N 1436.16
E 929.73
CP
N 1456.03
E 1092.00
COD
CP108
N 1414.13
E 1309.09
COD
N 1414.13
E 1307.09
EB,TAN
N 1450.61
E 1349.70
LP
N 1414.13
E 1180.59
RAD
13'-5"
N 1424.19
E 940.68
CP
N 1417.09
E 877.29
COD
N 1416.62
E 921.22
CP
N 1418.21
E 941.16
CP
N 1421.84
E 1350.95
COD
N 1414.13
E 1311.09
HB,TAN
R126'-6" EDGEBAND
R130'-6" HEADER BOARD
N 1416.78
E 923.21
CP
N 1402.26
E 942.43
CP
15'-0" TYP.
N 1371.23
E 918.18
LP
N 1335.12
E 1284.46
HB,TAN
N 1337.54
E 1281.27
EB,TAN
N 1376.41
E 1308.70
LP
N 1370.61
E 1349.70
LP
N 1367.45
E 1133.92
RAD
N 1264.67
E 1261.56
RAD
N 1268.67
E 1258.29
EP,TAN
N 1286.67
E 1241.17
CURB,TAN
N 1287.04
E 1240.83
HB
N 1279.58
E 1241.02
COD
N 1262.17
E 1253.67
DFR
N 1262.67
E 1252.29
EP,TAN
R371'-6" EDGEBAND
R375'-6" HEADER BOARD
R376'-0" CURB
N 1361.84
E 1350.96
COD
N 1336.87
E 927.57
CP
N 1338.46
E 947.50
CP
N 1321.72
E 942.81
CP
N 1320.45
E 926.86
CP
9'-1"
N 1322.20
E 948.79
CP
N 1297.61
E 1274.70
LP
N 1294.67
E 1261.56
CURB,TAN
N 1298.35
E 1249.70
COD
N 1324.67
E 1290.47
RAD
N 1324.67
E 1320.47
EP,TAN
25'-6"
4'-0"
R30'-0"
N 1328.23
E 877.28
COD
N 1319.66
E 916.90
CP
ADD ALT #1
N 1308.32
E 1280.04
COD
N 1301.84
E 1350.95
COD
N 1290.61
E 1349.70
LP
N 1240.40
E 1292.69
RAD
N 1240.40
E 1302.94
COD
N 1237.31
E 1299.69
EP,TAN
N 1240.40
E 1309.44
BIO,TAN
N 1237.31
E 1309.44
BIO,TAN
N 1238.67
E 1320.47
EP,TAN
N 1241.84
E 1350.96
COD
N 1242.45
E 955.14
CP
N 1242.45
E 975.70
CP
N 1240.95
E 977.20
CURB
N 1236.96
E 977.19
CURB
N 1242.45
E 986.57
FP
N 1238.95
E 1029.44
COD
N 1238.95
E 1133.92
COD
N 1236.45
E 1133.92
CURB,TAN
N 1240.95
E 1133.92
EB,TAN
R131'-0" CURB
R126'-6" EDGEBAND
N 1266.77
E 1210.50
EB,TAN
N 1263.18
E 1213.22
CURB,TAN
N 1254.86
E 1205.86
SB
N 1257.15
E 1279.10
BIO,TAN
N 1250.65
E 1280.04
COD
N 1268.67
E 1290.47
EP,TAN
N 1247.40
E 1279.10
RAD
N 1294.67
E 1290.47
EP,TAN
N 1257.15
E 1292.69
BIO,TAN
N 1263.66
E 1261.92
FH
N 1265.66
E 1263.92
BOL
N 1258.95
E 1253.12
DF
N 1255.73
E 1253.66
DFR
N 1255.23
E 1252.29
EP
N 1247.40
E 1269.35
BIO,TAN
N 1262.67
E 1258.29
RAD
N 1238.67
E 1290.47
RAD
R5'-0"
R30'-0"
R6'-0"
4'-0"
2'-1"
N 1240.95
E 954.76
EP
N 1236.51
E 954.76
EP
N 1239.91
E 923.24
CP
N 1239.38
E 877.26
COD
4'-0"
15'-0" TYP.
1'-0" TYP.
N 1261.69
E 1215.72
SB
N 1247.06
E 1189.43
FLG
N 1239.91
E 1171.34
LP

MATCHLINE - REFER TO SHEET L6.2

NORTH
0'
10'
20'
40'
60'

LAYOUT NOTES

1. THE CONTRACTOR SHALL COORDINATE ALL CONSTRUCTION ELEMENTS INCLUDING UTILITY LOCATIONS AND REQUIRED SLEEVING PRIOR TO INSTALLATION. VERIFY CRITICAL DIMENSIONS, REFERENCE POINT LOCATIONS AND CONSTRUCTION CONDITIONS PRIOR TO INITIATING CONSTRUCTION. TEMPORARY BENCHMARKS OR REFERENCE POINTS SHALL BE SET BY THE CONTRACTOR AS NECESSARY. NOTIFY THE OWNER'S REPRESENTATIVE IMMEDIATELY SHOULD DISCREPANCY ARISE AND REDIRECT WORK TO AVOID DELAYS.
2. ALL DIMENSIONS SHALL BE VERIFIED IN FIELD AND CHALKED, STRING LINED OR FLAGGED BY THE CONTRACTOR PRIOR TO CONSTRUCTION. ANY MINOR ADJUSTMENTS MADE TO ACHIEVE OVERALL DESIGN LAYOUT SHALL BE ACCEPTED BY THE OWNER PRIOR TO CONSTRUCTION.
3. LAYOUT IS BASED ON THE POINT(S) OF BEGINNING (P.O.B.) AND BASELINE(S) OR GRID SYSTEM AS SHOWN. DIMENSIONS SHOWN ARE ROUNDED TO THE NEAREST INCH.
4. ALL LAYOUT AND GRADES SHALL BE COMPLETED BY A LICENSED SURVEYOR.

LAYOUT LEGEND

SYM	DESCRIPTION
▬	LIMIT OF WORK
POB ◕	POINT OF BEGINNING
◉	ANCHOR POINT FOR CONTROL LINE
R10'	RADIUS POINT / CENTER MARK
90°	PROPOSED ANGLE BETWEEN ELEMENTS
ALIGN	ALIGN EDGES OF ELEMENTS
X"	DISTANCE BETWEEN ELEMENTS
	BASELINE
	CONTROL LINE
N 6+21.95 E 4+97.08	NORTHING/EASTING LAYOUT COORDINATE CALLOUT
(BASE)	HOME BASE
(BIO)	EDGE OF BIORETENTION AREA
(BOL)	CENTER OF BOLLARD
(COD)	CENTER OF DRAINAGE STRUCTURE
(CP)	CENTER OF POST
(CSP)	CENTER OF SIGN POST
(CTD)	CENTER OF TRENCH DRAIN
(CURB)	CURB
(DF)	DRINKING FOUNTAIN
(DFR)	DRINKING FOUNTAIN RAIL
(DOMES)	EDGE OF TRUNCATED DOMES
(EB)	EDGEBAND
(EP)	EDGE OF PAVEMENT
(FH)	FIRE HYDRANT
(FLG)	CENTER OF FLAG POLE
(FP)	CENTER OF FOUL POLE
(HB)	EDGE OF HEADERBOARD
(LP)	CENTER OF LIGHTING POLE
(RAD)	RADIUS POINT
(SB)	CENTER OF SCOREBOARD FOOTING
(SHADE)	CENTER OF SHADE STRUCTURE FOOTING
(TAN)	TANGENT POINT

IDENTIFICATION STAMP
DIV. OF THE STATE ARCHITECT
APP: 02-123587 INC:
REVIEWED FOR
SS ☑ FLS ☑ ACS ☑
DATE: 01/16/2026

VERDE DESIGN
LANDSCAPE ARCHITECTURE
CIVIL ENGINEERING
SPORT PLANNING & DESIGN
1843 Iron Point Rd. Suite 140
Folsom, CA 95630
tel: 916.418.6554
fax: 916.418.6526
www.VerdeDesignInc.com

STAMP

REGISTERED LANDSCAPE ARCHITECT
MARK S. BAGINSKI
No. 4059
EXPIRATION DATE: JULY 2027
STATE OF CALIFORNIA

CONSULTANT

KEYMAP

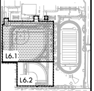

SHEET TITLE

LAYOUT
PLAN -
BASEBALL FIELD

PROJECT NAME

LODI HIGH SCHOOL
ATHLETIC FIELD
IMPROVEMENTS

PROJECT ADDRESS

3 S PACIFIC AVE
LODI, CA
95242

SUBMITTAL	DATE
50% DSA SUBMITTAL	07/31/25
100% DSA SUBMITTAL	09/25/25
DSA BACKCHECK SUBMITTAL	12/17/25
DSA BACKCHECK SUBMITTAL	01/08/26

NO.	REVISIONS	DATE
△		
△		
△		
△		
△		
△		

DRAWN BY	CHECKED BY
AJ	CS/MB
DATE ISSUED	SCALE
01/08/2026	1"=20'-0"

PROJ. NO.
2502700

SHEET NO.
L6.1

LAYOUT PLAN - BASEBALL FIELD

DRAWING NAME: Y:\Projects-FO\2025\2502700 - Lodi HS Baseball and Softball Field\CAD_LAY.dwg
PLOT DATE: 12-12-25 PLOTTED BY: station23

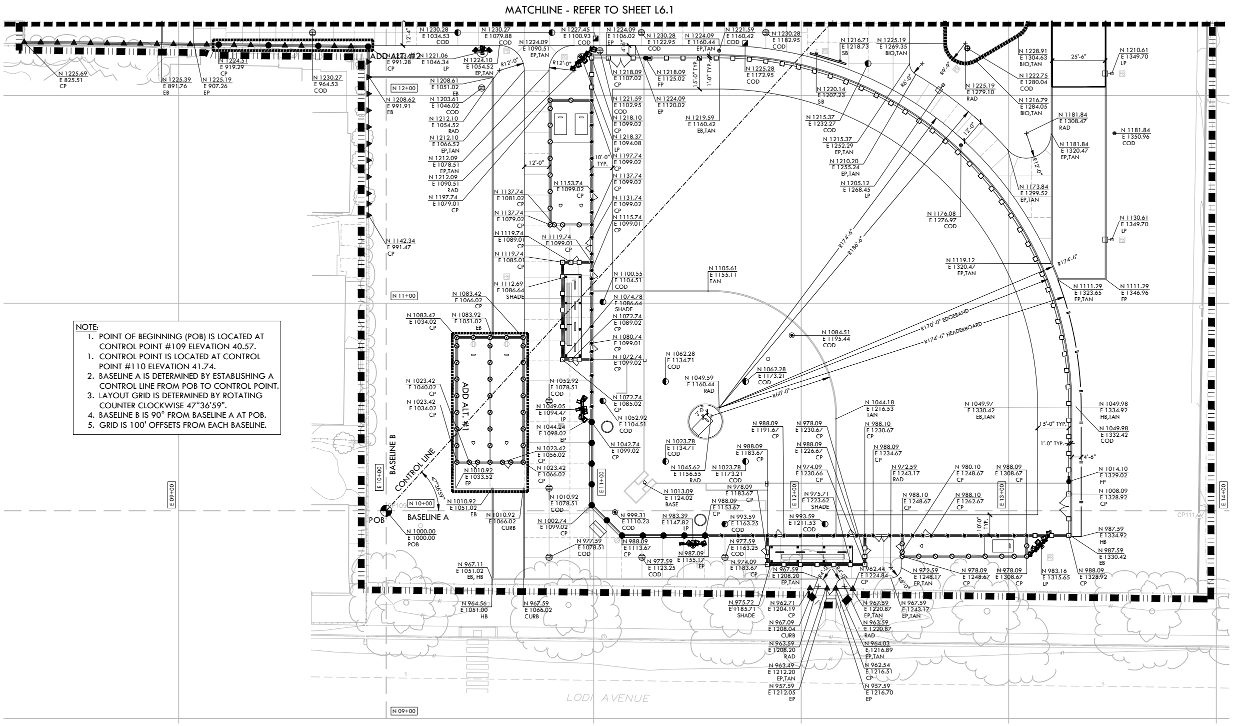
MATCHLINE - REFER TO SHEET L6.1
N 1225.69 E 825.51 CP
N 1225.39 E 891.76 EB
N 1225.19 E 907.26 EP
N 1224.51 E 919.29 CP
N 1230.27 E 964.53 COD
ADD ALT. #2
N [illegible] E 991.28 CP
12'-4"
N 1230.28 E 1034.53 COD
N 1221.06 E 1046.34 LP
N 1224.10 E 1054.52 EP,TAN
N 12+00
N 1208.62 E 991.91 EB
N 1208.61 E 1051.02 EB
N 1203.61 E 1046.02 COD
N 1212.10 E 1054.52 RAD
N 1212.10 E 1066.52 EP,TAN
N 1212.09 E 1078.51 EP,TAN
N 1212.09 E 1090.51 RAD
N 1197.74 E 1079.01 CP
N 1230.27 E 1079.88 COD
N 1224.09 E 1090.51 EP,TAN
R12'-0"
R12'-0"
N 1227.45 E 1100.93 COD
N 1224.09 E 1106.02 EP
4'-6"
N 1230.28 E 1122.95 COD
N 1224.09 E 1160.44 EP,TAN
N 1221.59 E 1160.42 COD
N 1230.28 E 1182.95 COD
N 1218.09 E 1107.02 CP
N 1218.09 E 1125.02 FP
15'-0" TYP.
1'-0" TYP.
N 1225.28 E 1172.95 COD
N 1221.59 E 1102.95 COD
N 1224.09 E 1120.02 EP
N 1219.59 E 1160.42 EB,TAN
N 1218.10 E 1099.02 CP
N 1218.37 E 1094.08 LP
N 1197.74 E 1099.02 CP
12'-0"
10'-0" TYP.
N 1153.74 E 1099.02 CP
N 1137.74 E 1081.02 CP
N 1137.74 E 1079.02 CP
N 1137.74 E 1099.02 CP
N 1131.74 E 1099.02 CP
N 1115.74 E 1099.01 CP
N 1119.74 E 1089.01 CP
N 1119.74 E 1099.01 CP
N 1119.74 E 1085.01 CP
N 1112.69 E 1086.64 SHADE
N 1142.34 E 991.47 CP
N 11+00
N 1100.55 E 1104.51 COD
N 1105.61 E 1155.11 TAN
N 1083.42 E 1066.02 CP
N 1083.42 E 1034.02 CP
N 1083.92 E 1051.02 EB
N 1074.78 E 1086.64 SHADE
N 1072.74 E 1089.02 CP
N 1080.74 E 1099.01 CP
N 1072.74 E 1099.02 CP
ADD ALT. #1
N 1023.42 E 1040.02 CP
N 1023.42 E 1034.02 CP
N 1052.92 E 1078.51 COD
N 1049.05 E 1094.47 LP
N 1044.24 E 1098.02 EP
N 1072.74 E 1085.02 CP
N 1052.92 E 1104.51 COD
N 1042.74 E 1099.02 CP
N 1023.42 E 1056.02 CP
N 1023.42 E 1066.02 CP
N 1010.92 E 1033.52 EP
E 10+00
BASELINE B
CONTROL LINE
47°36'59"
CP109
N 10+00
POB
BASELINE A
N 1000.00 E 1000.00 POB
N 1010.92 E 1051.02 EB
N 1010.92 E 1066.02 CURB
N 1010.92 E 1078.51 COD
N 1002.74 E 1099.02 CP
E 11+00
N 977.59 E 1078.51 COD
N 967.11 E 1051.02 EB, HB
N 964.56 E 1051.00 HB
N 967.59 E 1066.02 CURB
N 999.31 E 1110.23 COD
N 988.09 E 1113.67 CP
N 977.59 E 1123.25 COD
N 983.39 E 1147.82 LP
N 987.09 E 1155.17 EP
N 988.09 E 1153.67 CP
N 993.59 E 1163.25 COD
N 977.59 E 1163.25 COD
N 974.09 E 1183.67 CP
N 975.72 E 1185.71 SHADE
N 1013.09 E 1124.02 BASE
N 1062.28 E 1134.71 COD
N 1049.59 E 1160.44 RAD
3'-0"
N 1023.78 E 1134.71 COD
N 1045.62 E 1156.55 RAD
N 1023.78 E 1173.21 COD
N 1062.28 E 1173.21 COD
R60'-0"
N 1084.51 E 1195.44 COD
N 988.09 E 1191.67 CP
N 988.09 E 1183.67 CP
N 978.09 E 1183.67 CP
E 12+00
N 993.59 E 1211.53 COD
N 975.71 E 1223.62 SHADE
N 978.09 E 1230.67 CP
N 988.09 E 1226.67 CP
N 974.09 E 1230.66 CP
N 988.10 E 1230.67 CP
N 988.09 E 1234.67 CP
N 1044.18 E 1216.53 TAN
N 972.59 E 1243.17 RAD
N 967.59 E 1208.20 EP,TAN
R4'-0"
R4'-0"
N 962.44 E 1224.84 CP
R5'-0"
N 962.71 E 1204.19 CP
N 967.09 E 1208.04 CURB
N 963.59 E 1208.20 RAD
N 963.49 E 1212.20 EP,TAN
N 957.59 E 1212.05 EP
N 967.59 E 1220.87 EP,TAN
N 963.59 E 1220.87 RAD
N 964.03 E 1216.89 EP,TAN
N 962.54 E 1216.51 CP
N 957.59 E 1216.70 EP
N 967.59 E 1243.17 EP,TAN
N 972.59 E 1248.17 EP,TAN
N 978.09 E 1248.67 CP
N 988.10 E 1248.67 CP
N 980.10 E 1248.67 CP
N 988.10 E 1262.67 CP
10'-0" TYP.
E 13+00
N 988.09 E 1308.67 CP
N 978.09 E 1308.67 CP
N 983.16 E 1315.65 LP
N 988.09 E 1328.92 CP
N 987.59 E 1334.92 HB
N 987.59 E 1330.42 EB
N 1008.09 E 1328.92 CP
N 1014.10 E 1329.02 FP
4'-6"
1'-0" TYP.
15'-0" TYP.
N 1049.97 E 1330.42 EB,TAN
N 1049.98 E 1334.92 HB,TAN
N 1049.98 E 1332.42 COD
CP111
E 14+00
N 1216.71 E 1218.73 SB
N 1225.19 E 1269.35 BIO,TAN
N 1220.14 E 1207.23 SB
N 1215.37 E 1232.27 COD
N 1215.37 E 1252.29 EP,TAN
N 1210.20 E 1255.24 EP,TAN
N 1205.12 E 1268.45 LP
R6'-0"
R9'-9"
N 1225.19 E 1279.10 RAD
12'-0"
N 1228.91 E 1304.63 BIO,TAN
N 1222.75 E 1280.04 COD
N 1216.79 E 1284.05 BIO,TAN
25'-6"
N 1210.61 E 1349.70 LP
N 1181.84 E 1308.47 RAD
N 1181.84 E 1320.47 EP,TAN
R12'-0"
N 1181.84 E 1350.96 COD
N 1173.84 E 1299.52 EP,TAN
N 1176.08 E 1276.97 COD
R174'-6"
R186'-6"
N 1130.61 E 1349.70 LP
N 1119.12 E 1320.47 EP,TAN
R174'-6"
N 1111.29 E 1323.65 EP,TAN
N 1111.29 E 1346.96 EP
R170'-0" EDGEBAND
R174'-6" HEADERBOARD
E 09+00
N 09+00
LODI AVENUE

NOTE:
1. POINT OF BEGINNING (POB) IS LOCATED AT CONTROL POINT #109 ELEVATION 40.57.
1. CONTROL POINT IS LOCATED AT CONTROL POINT #110 ELEVATION 41.74.
2. BASELINE A IS DETERMINED BY ESTABLISHING A CONTROL LINE FROM POB TO CONTROL POINT.
3. LAYOUT GRID IS DETERMINED BY ROTATING COUNTER CLOCKWISE 47°36'59".
4. BASELINE B IS 90° FROM BASELINE A AT POB.
5. GRID IS 100' OFFSETS FROM EACH BASELINE.

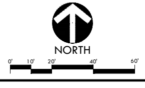
NORTH
0'
10'
20'
40'
60'

LAYOUT NOTES

1. THE CONTRACTOR SHALL COORDINATE ALL CONSTRUCTION ELEMENTS INCLUDING UTILITY LOCATIONS AND REQUIRED SLEEVING PRIOR TO INSTALLATION. VERIFY CRITICAL DIMENSIONS, REFERENCE POINT LOCATIONS AND CONSTRUCTION CONDITIONS PRIOR TO INITIATING CONSTRUCTION. TEMPORARY BENCHMARKS OR REFERENCE POINTS SHALL BE SET BY THE CONTRACTOR AS NECESSARY. NOTIFY THE OWNER'S REPRESENTATIVE IMMEDIATELY SHOULD DISCREPANCY ARISE AND REDIRECT WORK TO AVOID DELAYS.
2. ALL DIMENSIONS SHALL BE VERIFIED IN FIELD AND CHALKED, STRING LINED OR FLAGGED BY THE CONTRACTOR PRIOR TO CONSTRUCTION. ANY MINOR ADJUSTMENTS MADE TO ACHIEVE OVERALL DESIGN LAYOUT SHALL BE ACCEPTED BY THE OWNER PRIOR TO CONSTRUCTION.
3. LAYOUT IS BASED ON THE POINT(S) OF BEGINNING (P.O.B.) AND BASELINE(S) OR GRID SYSTEM AS SHOWN. DIMENSIONS SHOWN ARE ROUNDED TO THE NEAREST INCH.
4. ALL LAYOUT AND GRADES SHALL BE COMPLETED BY A LICENSED SURVEYOR.

LAYOUT LEGEND

SYM	DESCRIPTION
	LIMIT OF WORK
POB	POINT OF BEGINNING
⊙	ANCHOR POINT FOR CONTROL LINE
R10'	RADIUS POINT / CENTER MARK
90°	PROPOSED ANGLE BETWEEN ELEMENTS
ALIGN	ALIGN EDGES OF ELEMENTS
X"	DISTANCE BETWEEN ELEMENTS
	BASELINE
	CONTROL LINE
N 6+21.95 E 4+97.08	NORTHING/EASTING LAYOUT COORDINATE CALLOUT
(BASE)	HOME BASE
(BIO)	EDGE OF BIORETENTION AREA
(BOL)	CENTER OF BOLLARD
(COD)	CENTER OF DRAINAGE STRUCTURE
(CP)	CENTER OF POST
(CSP)	CENTER OF SIGN POST
(CTD)	CENTER OF TRENCH DRAIN
(CURB)	CURB
(DF)	DRINKING FOUNTAIN
(DFR)	DRINKING FOUNTAIN RAIL
(DOMES)	EDGE OF TRUNCATED DOMES
(EB)	EDGEBAND
(EP)	EDGE OF PAVEMENT
(FH)	FIRE HYDRANT
(FLG)	CENTER OF FLAG POLE
(FP)	CENTER OF FOUL POLE
(HB)	EDGE OF HEADERBOARD
(LP)	CENTER OF LIGHTING POLE
(RAD)	RADIUS POINT
(SB)	CENTER OF SCOREBOARD FOOTING
(SHADE)	CENTER OF SHADE STRUCTURE FOOTING
(TAN)	TANGENT POINT

IDENTIFICATION STAMP
DIV. OF THE STATE ARCHITECT
APP: 02-123587 INC:
REVIEWED FOR
SS ☑ FLS ☑ ACS ☑
DATE: 01/16/2026

VERDE DESIGN
LANDSCAPE ARCHITECTURE
CIVIL ENGINEERING
SPORT PLANNING & DESIGN
1843 Iron Point Rd. Suite 140
Folsom, CA 95630
tel: 916.415.6554
fax: 916.415.6525
www.VerdeDesigninc.com

STAMP

REGISTERED LANDSCAPE ARCHITECT
MARK S. BAGINSKI
No. 4089
Signature
EXPIRATION DATE: JULY 2027
STATE OF CALIFORNIA

CONSULTANT

KEYMAP

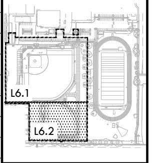

SHEET TITLE
LAYOUT
PLAN -
SOFTBALL FIELD

PROJECT NAME
LODI HIGH SCHOOL
ATHLETIC FIELD
IMPROVEMENTS

PROJECT ADDRESS
3 S PACIFIC AVE
LODI, CA
95242

SUBMITTAL	DATE
50% DSA SUBMITTAL	07/31/25
100% DSA SUBMITTAL	09/25/25
DSA BACKCHECK SUBMITTAL	12/17/25
DSA BACKCHECK SUBMITTAL	01/08/26

NO.	REVISIONS	DATE
△		
△		
△		
△		
△		
△		

DRAWN BY: AJ
CHECKED BY: CS/MB
DATE ISSUED: 01/08/2026
SCALE: 1"=20'-0"
PROJ. NO.: 2502700
SHEET NO.: L6.2

ALL IDEAS, DESIGNS, ARRANGEMENTS, AND PLANS INDICATED OR REPRESENTED BY THIS DRAWING ARE OWNED BY AND THE PROPERTY OF VERDE DESIGN, INC. AND WERE CREATED, EVOLVED, AND DEVELOPED FOR USE ON AND IN CONNECTION WITH THE SPECIFIED PROJECT. NONE OF SUCH IDEAS, DESIGNS, ARRANGEMENTS OR PLANS SHALL BE USED, REPRODUCED, OR PUBLISHED BY ANY METHOD, IN WHOLE OR IN PART, OR DISCLOSED TO ANY PERSON, FIRM, OR CORPORATION FOR ANY PURPOSE WHATSOEVER WITHOUT WRITTEN PERMISSION OF VERDE DESIGN, INC.

MATERIAL LEGEND

SYM	DESCRIPTION	DTL REF
㉟	DRINKING FOUNTAIN	A/D1.2
㊱	RAMP	N/D2.1
㊲	DRIVEWAY	O/D2.1
㊳	EXISTING RESTROOM BUILDING MODIFICATIONS	A/D6.1
㊴	FIRE LANE STRIPING	N/D2.2
㊵	PATHWAY LIGHTS	

MATERIAL LEGEND

SYM	DESCRIPTION	DTL REF
㉙	ASPHALT PATCH	C/D2.1
㉚	CONCRETE VALLEY GUTTER	M/D2.1
㉛	MUSCO LIGHTING, REFER TO MUSCO AND ELECTRICAL PLANS	
㉜	EXISTING BATTING CAGE RESURFACE	K/D4.2
㉝	FIRE HYDRANT	B/D1.2
㉞	ADA PARKING STALL	K/D2.2

MATERIAL LEGEND

SYM	DESCRIPTION	DTL REF
㉕	BOLLARD - REMOVABLE	K/D2.1
㉖	SHOVEL CUT EDGE	H/D4.2
㉗	INFIELD FINES TO SYNTHETIC TURF EDGE	J/D2.1
㉘	NATURAL TURF TO SYNTHETIC TURF EDGE	I/D2.1

MATERIAL LEGEND

SYM	DESCRIPTION	DTL REF
㉑	FOUL POLE	J/D4.1
㉒	FENCE CAP - BLACK (REFER TO SPECIFICATIONS)	J/D4.1
㉓	FENCE CAP - YELLOW (REFER TO SPECIFICATIONS)	J/D4.1
㉔	OUTFIELD DISTANCE BANNERS, REFER TO SPECIFICATIONS	

MATERIAL LEGEND

SYM	DESCRIPTION	DTL REF
⑰	DUGOUT	F,G,I/D4.1
⑱	SCORER'S TABLE, REFER TO SPECIFICATIONS	
⑲	BATTING CAGE - ADDITIVE ALTERNATE #1	A/D4.4
⑳	FENCE IN INFIELD FINES	I/D4.2

MATERIAL NOTES

1. THE CONTRACTOR SHALL COORDINATE ALL CONSTRUCTION ELEMENTS INCLUDING UTILITY LOCATIONS & REQUIRED SLEEVING PRIOR TO INSTALLATION. VERIFY CRITICAL DIMENSIONS, REFERENCE POINT LOCATIONS & CONSTRUCTION CONDITIONS PRIOR TO INITIATING CONSTRUCTION. TEMPORARY BENCHMARKS OR REFERENCE POINTS SHALL BE SET BY THE CONTRACTOR AS REQ. NOTIFY THE DISTRICT'S REP. IMMEDIATELY SHOULD DISCREPANCY ARISE & REDIRECT WORK TO AVOID DELAYS.
2. THE INTERFACE OF ALL PROPOSED IMPROVEMENTS TO EXISTING SITE SHALL CONFORM & BE SMOOTH & UNIFORM.
3. ALL REINFORCING & FORMS SHALL BE SECURED IN PLACE & ACCEPTED BY DISTRICT'S REP. PRIOR TO PLACING ANY CONCRETE.
4. CONCRETE FINISHES SHALL BE AS NOTED. CONTRACTOR SHALL PROVIDE 4'X4' SAMPLES OF ALL SPECIFIED FINISHES OF CONCRETE USING THE SAME MATERIALS THAT WILL BE USED IN THE ACTUAL CONSTRUCTION FOR EACH TYPE SPECIFIED. SAMPLES SHALL BE PREPARED WELL ENOUGH IN ADVANCE OF SCHEDULED CONCRETE POUR TO ALLOW FOR REVIEW & POSSIBLE RE-POURING OF UNACCEPTABLE SAMPLES. UNACCEPTABLE SAMPLES SHALL BE RE-PREPARED UNTIL ACCEPTED BY THE DISTRICT'S REP. ACCEPTED SAMPLES SHALL BE PROTECTED & REMAIN ON SITE FOR REFERENCE UNTIL FINAL ACCEPTANCE.
5. ALL FENCES & GATES SHOWN ON PLAN ARE GRAPHIC REPRESENTATIONS; REFER TO DETAILS & SPECIFICATIONS FOR PRECISE LOCATION.
6. ASPHALT SHALL NOT BE INSTALLED UNTIL ALL EDGES & SITE FURNISHING PADS ARE INSTALLED.

MATERIAL LEGEND

SYM	DESCRIPTION	DTL REF
▬ ▬	LIMIT OF WORK	
⠿	SYNTHETIC TURF WITH BROCK PAD - (GREEN)	G/D2.1
░	SYNTHETIC TURF WITH BROCK PAD - (INFIELD BROWN)	G/D2.1
▧	SYNTHETIC TURF (NO INFILL)	H/D2.1
▨	INFIELD/WARNING TRACK FINES	L/D4.1
▒	INFIELD FINES OVER CLAY	K/D4.1
○○○	DETECTABLE WARNING (SURFACE MOUNT)	L/D2.1
▥	ASPHALT PAVING	B/D2.1
░	CONCRETE PAVING	A/D2.1
- - -	EXPANSION JOINT SCORE JOINT	E/D2.1
▭	TRENCH DRAIN	J/D1.1
⊗—⊗—⊗	42" TALL CHAIN LINK FENCE	D/D3.1
□—□—□	6' TALL CHAIN LINK FENCE	D/D3.1
□⧻□⧻□	6' TALL CHAIN LINK FENCE WITH SLATS	E/D3.1
▲—▲—▲	7' TALL CHAIN LINK FENCE	F/D3.1
⊘—⊘—⊘	10' TALL CHAIN LINK FENCE	F/D3.1
•—•—•	12' TALL CHAIN LINK FENCE	F/D3.1
⊗—⊗—⊗	14' TALL CHAIN LINK FENCE	G/D3.1
●—●—●	30' TALL CHAIN LINK BACKSTOP	I/D3.1
●▲▲●	20' TALL PROTECTIVE NETTING WITH 7' TALL FENCE - ADDITIVE ALTERNATE #2	D/D4.4
—‖—	REDWOOD HEADER BOARD	Q/D5.1
(G1)	6' TALL X 4' WIDE SWING GATE WITH PANIC HARDWARE	A/D3.2
(G2)	7' TALL X 4' WIDE SWING GATE WITH PANIC HARDWARE	B/D3.2
(G3)	7' TALL X 4' WIDE SWING GATE WITH TRANSOM & PANIC HARDWARE	C/D3.2
(G4)	7' TALL X 8' WIDE DOUBLE SWING GATE WITH TRANSOM & PANIC HARDWARE	D/D3.2
(G5)	6' TALL X 12' WIDE DOUBLE SWING GATE	E/D3.2
(G6)	6' TALL X 24' WIDE DOUBLE SWING GATE	F/D3.2
①	6" CURB AT PARKING LOT	E/D2.2
②	6" WIDE EDGEBAND	B/D2.2
③	12" WIDE EDGEBAND WITH FENCE	C/D2.2
④	12" WIDE TALL CURB WITH FENCE	F/D2.2
⑤	18" WIDE BACKSTOP EDGEBAND	D/D2.2
⑥	6" WIDE TALL CURB	M/D2.2
⑦	FLAG POLE (REFER TO STRUCTURAL DRAWINGS AND SPECIFICATIONS)	
⑧	SCOREBOARD (REFER TO NEVCO, STRUCTURAL, AND ELECTRICAL DRAWINGS, AND SPECIFICATIONS)	
⑨	BASEBALL BACKSTOP (REFER TO STRUCTURAL DRAWINGS AND SPECIFICATIONS)	A/D3.3
⑩	SOFTBALL BACKSTOP (REFER TO STRUCTURAL DRAWINGS AND SPECIFICATIONS)	A/D3.4
⑪	BASEBALL INFIELD	A/D4.1
⑫	SOFTBALL INFIELD	A/D4.3
⑬	BASEBALL SINGLE BULLPEN	A/D4.2
⑭	BASEBALL DOUBLE BULLPEN	B/D4.2
⑮	SOFTBALL SINGLE BULLPEN	B/D4.3
⑯	SOFTBALL DOUBLE BULLPEN	C/D4.3

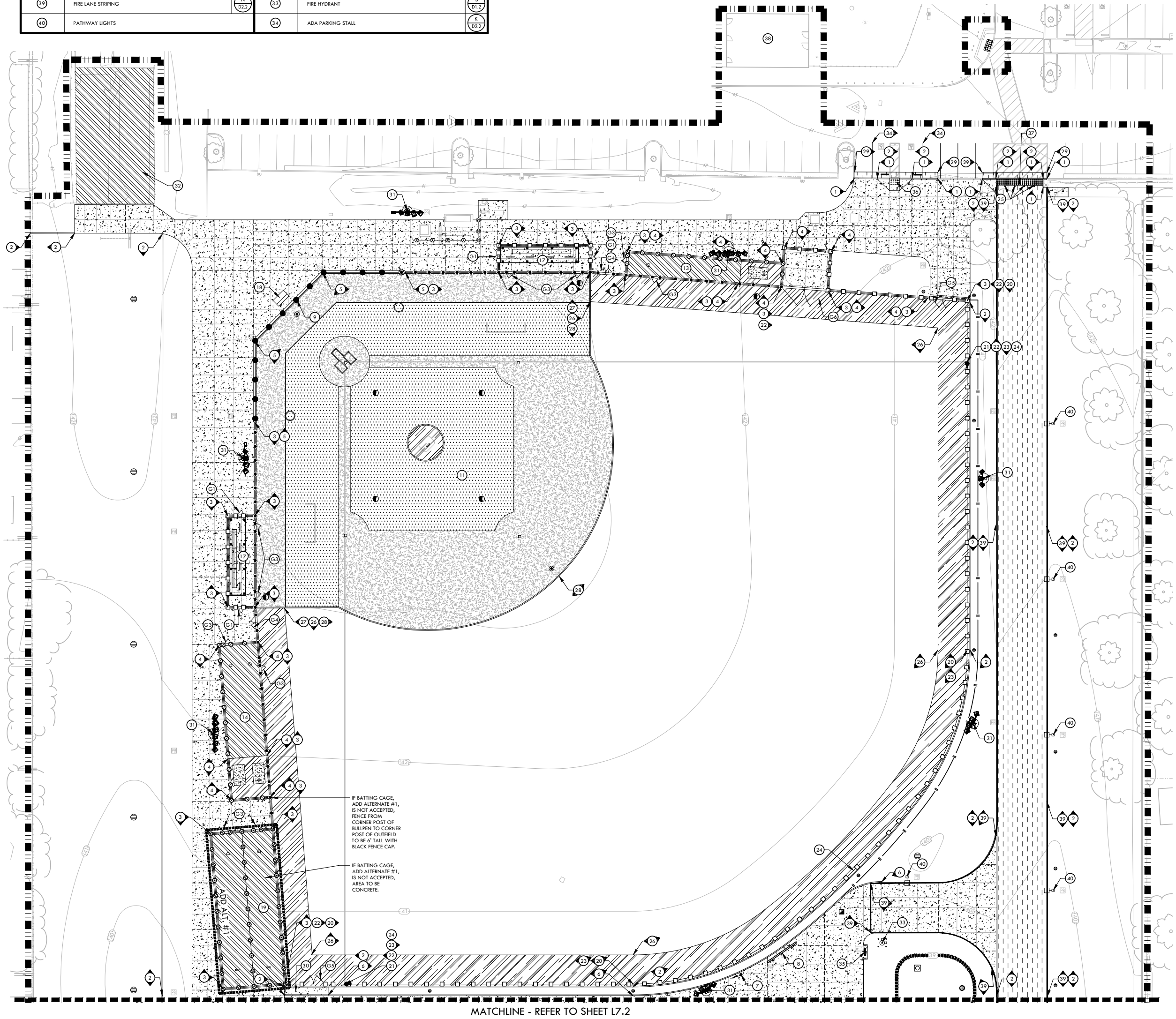

IF BATTING CAGE, ADD ALTERNATE #1, IS NOT ACCEPTED, FENCE FROM CORNER POST OF BULLPEN TO CORNER POST OF OUTFIELD TO BE 6' TALL WITH BLACK FENCE CAP.

IF BATTING CAGE, ADD ALTERNATE #1, IS NOT ACCEPTED, AREA TO BE CONCRETE.

MATCHLINE - REFER TO SHEET L7.2

NORTH
0'
10'
20'
40'
60'

IDENTIFICATION STAMP
DIV. OF THE STATE ARCHITECT
APP: 02-123587 INC:
REVIEWED FOR
SS ☑ FLS ☑ ACS ☑
DATE: 01/16/2026

VERDE DESIGN
LANDSCAPE ARCHITECTURE
CIVIL ENGINEERING
SPORT PLANNING & DESIGN
1843 Iron Point Rd. Suite 140
Folsom, CA 95630
tel: 916.415.6554
fax: 916.415.6525
www.VerdeDesigninc.com

STAMP

MARK S. BAGINSKI
No. 4069
EXPIRATION DATE: JULY 2027

CONSULTANT

KEYMAP

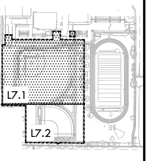

SHEET TITLE

MATERIAL AND
DETAIL REFERENCE PLAN -
BASEBALL FIELD

PROJECT NAME

LODI HIGH SCHOOL
ATHLETIC FIELD
IMPROVEMENTS

PROJECT ADDRESS

3 S PACIFIC AVE
LODI, CA
95242

SUBMITTAL	DATE
50% DSA SUBMITTAL	07/31/25
100% DSA SUBMITTAL	09/25/25
DSA BACKCHECK SUBMITTAL	12/17/25
DSA BACKCHECK SUBMITTAL	01/08/26

NO.	REVISIONS	DATE
△		
△		
△		
△		
△		
△		

DRAWN BY	CHECKED BY
AJ	CS/MB
DATE ISSUED	SCALE
01/08/2026	1"=20'-0"

PROJ. NO.
2502700

SHEET NO.
L7.1

ALL IDEAS, DESIGNS, ARRANGEMENTS, AND PLANS INDICATED OR REPRESENTED BY THIS DRAWING ARE OWNED BY AND THE PROPERTY OF VERDE DESIGN, INC. AND WERE CREATED, EVOLVED, AND DEVELOPED FOR USE ON AND IN CONNECTION WITH THE SPECIFIED PROJECT. NONE OF SUCH IDEAS, DESIGNS, ARRANGEMENTS OR PLANS SHALL BE USED, REPRODUCED, OR PUBLISHED BY ANY METHOD, IN WHOLE OR IN PART, OR DISCLOSED TO ANY PERSON, FIRM, OR CORPORATION FOR ANY PURPOSE WHATSOEVER WITHOUT WRITTEN PERMISSION OF VERDE DESIGN, INC.

DRAWING NAME: Y:\Projects-FO\2025\2502700 - Lodi HS Baseball and Softball Field\CAD_MAT.dwg
PLOT DATE: 01-06-26 PLOTTED BY: station23

MATERIAL LEGEND

SYM	DESCRIPTION	DTL REF
35	DRINKING FOUNTAIN	A/D1.2
36	RAMP	N/D2.1
37	DRIVEWAY	O/D2.1
38	EXISTING RESTROOM BUILDING MODIFICATIONS	A/D6.1
39	FIRE LANE STRIPING	N/D2.2
40	PATHWAY LIGHTS	

MATERIAL LEGEND

SYM	DESCRIPTION	DTL REF
29	ASPHALT PATCH	C/D2.1
30	CONCRETE VALLEY GUTTER	M/D2.1
31	MUSCO LIGHTING, REFER TO MUSCO AND ELECTRICAL PLANS	
32	EXISTING BATTING CAGE RESURFACE	K/D4.2
33	FIRE HYDRANT	B/D1.2
34	ADA PARKING STALL	K/D2.2

MATERIAL LEGEND

SYM	DESCRIPTION	DTL REF
25	BOLLARD - REMOVABLE	K/D2.1
26	SHOVEL CUT EDGE	H/D4.2
27	INFIELD FINES TO SYNTHETIC TURF EDGE	J/D2.1
28	NATURAL TURF TO SYNTHETIC TURF EDGE	I/D2.1

MATERIAL LEGEND

SYM	DESCRIPTION	DTL REF
21	FOUL POLE	J/D4.1
22	FENCE CAP - BLACK (REFER TO SPECIFICATIONS)	J/D4.1
23	FENCE CAP - YELLOW (REFER TO SPECIFICATIONS)	J/D4.1
24	OUTFIELD DISTANCE BANNERS, REFER TO SPECIFICATIONS	

MATERIAL LEGEND

SYM	DESCRIPTION	DTL REF
17	DUGOUT	F,G,I/D4.1
18	SCORER'S TABLE, REFER TO SPECIFICATIONS	
19	BATTING CAGE - ADDITIVE ALTERNATE #1	A/D4.4
20	FENCE IN INFIELD FINES	I/D4.2

MATERIAL NOTES

1. THE CONTRACTOR SHALL COORDINATE ALL CONSTRUCTION ELEMENTS INCLUDING UTILITY LOCATIONS & REQUIRED SLEEVING PRIOR TO INSTALLATION. VERIFY CRITICAL DIMENSIONS, REFERENCE POINT LOCATIONS & CONSTRUCTION CONDITIONS PRIOR TO INITIATING CONSTRUCTION. TEMPORARY BENCHMARKS OR REFERENCE POINTS SHALL BE SET BY THE CONTRACTOR AS REQ. NOTIFY THE DISTRICT'S REP. IMMEDIATELY SHOULD DISCREPANCY ARISE & REDIRECT WORK TO AVOID DELAYS.
2. THE INTERFACE OF ALL PROPOSED IMPROVEMENTS TO EXISTING SITE SHALL CONFORM & BE SMOOTH & UNIFORM.
3. ALL REINFORCING & FORMS SHALL BE SECURED IN PLACE & ACCEPTED BY DISTRICT'S REP. PRIOR TO PLACING ANY CONCRETE.
4. CONCRETE FINISHES SHALL BE AS NOTED. CONTRACTOR SHALL PROVIDE 4'X4' SAMPLES OF ALL SPECIFIED FINISHES OF CONCRETE USING THE SAME MATERIALS THAT WILL BE USED IN THE ACTUAL CONSTRUCTION FOR EACH TYPE SPECIFIED. SAMPLES SHALL BE PREPARED WELL ENOUGH IN ADVANCE OF SCHEDULED CONCRETE POUR TO ALLOW FOR REVIEW & POSSIBLE RE-POURING OF UNACCEPTABLE SAMPLES. UNACCEPTABLE SAMPLES SHALL BE RE-PREPARED UNTIL ACCEPTED BY THE DISTRICT'S REP. ACCEPTED SAMPLES SHALL BE PROTECTED & REMAIN ON SITE FOR REFERENCE UNTIL FINAL ACCEPTANCE.
5. ALL FENCES & GATES SHOWN ON PLAN ARE GRAPHIC REPRESENTATIONS; REFER TO DETAILS & SPECIFICATIONS FOR PRECISE LOCATION.
6. ASPHALT SHALL NOT BE INSTALLED UNTIL ALL EDGES & SITE FURNISHING PADS ARE INSTALLED.

MATERIAL LEGEND

SYM	DESCRIPTION	DTL REF
■ ▪ ■	LIMIT OF WORK	
░	SYNTHETIC TURF WITH BROCK PAD - (GREEN)	G/D2.1
▒	SYNTHETIC TURF WITH BROCK PAD - (INFIELD BROWN)	G/D2.1
▧	SYNTHETIC TURF (NO INFILL)	H/D2.1
▨	INFIELD/WARNING TRACK FINES	L/D4.1
▒	INFIELD FINES OVER CLAY	K/D4.1
⠿	DETECTABLE WARNING (SURFACE MOUNT)	L/D2.1
┆	ASPHALT PAVING	B/D2.1
░	CONCRETE PAVING	A/D2.1
- - -	EXPANSION JOINT SCORE JOINT	E/D2.1
▭	TRENCH DRAIN	J/D1.1
⊗—⊗—⊗	42" TALL CHAIN LINK FENCE	D/D3.1
□—□—□	6' TALL CHAIN LINK FENCE	D/D3.1
□‖‖□‖‖□	6' TALL CHAIN LINK FENCE WITH SLATS	E/D3.1
▲—▲—▲	7' TALL CHAIN LINK FENCE	F/D3.1
⊘—⊘—⊘	10' TALL CHAIN LINK FENCE	F/D3.1
•—•—•	12' TALL CHAIN LINK FENCE	F/D3.1
⊗—⊗—⊗	14' TALL CHAIN LINK FENCE	G/D3.1
●—●—●	30' TALL CHAIN LINK BACKSTOP	I/D3.1
●▲▲●	20' TALL PROTECTIVE NETTING WITH 7' TALL FENCE - ADDITIVE ALTERNATE #2	D/D4.4
—‖—	REDWOOD HEADER BOARD	Q/D5.1
G1	6' TALL X 4' WIDE SWING GATE WITH PANIC HARDWARE	A/D3.2
G2	7' TALL X 4' WIDE SWING GATE WITH PANIC HARDWARE	B/D3.2
G3	7' TALL X 4' WIDE SWING GATE WITH TRANSOM & PANIC HARDWARE	C/D3.2
G4	7' TALL X 8' WIDE DOUBLE SWING GATE WITH TRANSOM & PANIC HARDWARE	D/D3.2
G5	6' TALL X 12' WIDE DOUBLE SWING GATE	E/D3.2
G6	6' TALL X 24' WIDE DOUBLE SWING GATE	F/D3.2
1	6" CURB AT PARKING LOT	E/D2.2
2	6" WIDE EDGEBAND	B/D2.2
3	12" WIDE EDGEBAND WITH FENCE	C/D2.2
4	12" WIDE TALL CURB WITH FENCE	F/D2.2
5	18" WIDE BACKSTOP EDGEBAND	D/D2.2
6	6" WIDE TALL CURB	M/D2.2
7	FLAG POLE (REFER TO STRUCTURAL DRAWINGS AND SPECIFICATIONS)	
8	SCOREBOARD (REFER TO NEVCO, STRUCTURAL, AND ELECTRICAL DRAWINGS, AND SPECIFICATIONS)	
9	BASEBALL BACKSTOP (REFER TO STRUCTURAL DRAWINGS AND SPECIFICATIONS)	A/D3.3
10	SOFTBALL BACKSTOP (REFER TO STRUCTURAL DRAWINGS AND SPECIFICATIONS)	A/D3.4
11	BASEBALL INFIELD	A/D4.1
12	SOFTBALL INFIELD	A/D4.3
13	BASEBALL SINGLE BULLPEN	A/D4.2
14	BASEBALL DOUBLE BULLPEN	B/D4.2
15	SOFTBALL SINGLE BULLPEN	B/D4.3
16	SOFTBALL DOUBLE BULLPEN	C/D4.3

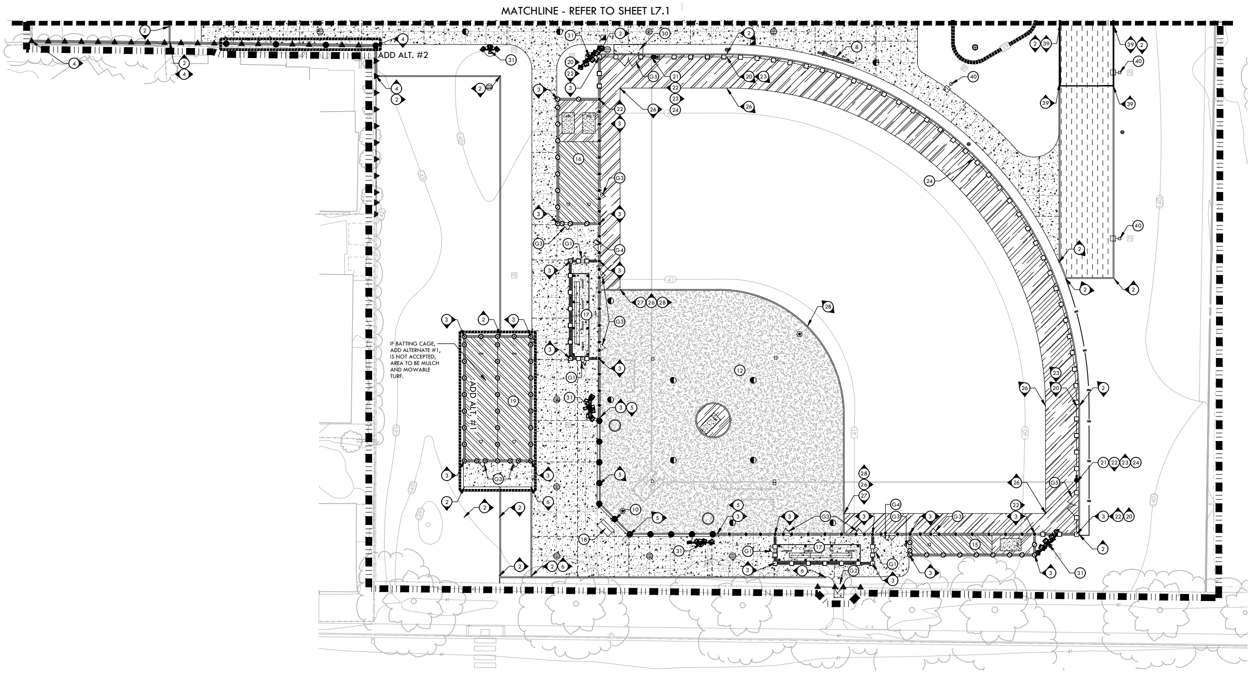

IF BATTING CAGE, ADD ALTERNATE #1, IS NOT ACCEPTED, AREA TO BE MULCH AND MOWABLE TURF.

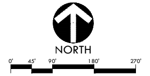

IDENTIFICATION STAMP
DIV. OF THE STATE ARCHITECT
APP: 02-123587 INC:
REVIEWED FOR
SS ☑ FLS ☑ ACS ☑
DATE: 01/16/2026

VERDE DESIGN
LANDSCAPE ARCHITECTURE
CIVIL ENGINEERING
SPORT PLANNING & DESIGN
1843 Iron Point Rd. Suite 140
Folsom, CA 95630
tel: 916.415.6554
fax: 916.415.6525
www.VerdeDesigninc.com

STAMP

MARK S. BAGINSKI
No. 4069
EXPIRATION DATE: JULY 2027

CONSULTANT

KEYMAP

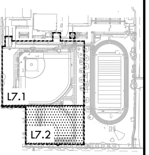

SHEET TITLE

MATERIAL AND
DETAIL REFERENCE PLAN -
SOFTBALL FIELD

PROJECT NAME

LODI HIGH SCHOOL
ATHLETIC FIELD
IMPROVEMENTS

PROJECT ADDRESS

3 S PACIFIC AVE
LODI, CA
95242

SUBMITTAL	DATE
50% DSA SUBMITTAL	07/31/25
100% DSA SUBMITTAL	09/25/25
DSA BACKCHECK SUBMITTAL	12/17/25
DSA BACKCHECK SUBMITTAL	01/08/26

NO.	REVISIONS	DATE
△		
△		
△		
△		
△		
△		

DRAWN BY AJ	CHECKED BY CS/MB
DATE ISSUED 01/08/2026	SCALE 1"=20'-0"
PROJ. NO. 2502700	
SHEET NO. L7.2	

MATERIAL AND DETAIL REFERENCE PLAN - SOFTBALL FIELD

ALL IDEAS, DESIGNS, ARRANGEMENTS, AND PLANS INDICATED OR REPRESENTED BY THIS DRAWING ARE OWNED BY AND THE PROPERTY OF VERDE DESIGN, INC. AND WERE CREATED, EVOLVED, AND DEVELOPED FOR USE ON AND IN CONNECTION WITH THE SPECIFIED PROJECT. NONE OF SUCH IDEAS, DESIGNS, ARRANGEMENTS OR PLANS SHALL BE USED, REPRODUCED, OR PUBLISHED BY ANY METHOD, IN WHOLE OR IN PART, OR DISCLOSED TO ANY PERSON, FIRM, OR CORPORATION FOR ANY PURPOSE WHATSOEVER WITHOUT WRITTEN PERMISSION OF VERDE DESIGN, INC.

DRAWING NAME: Y:\Projects-FO\2025\2502700 - Lodi HS Baseball and Softball Field\CAD_MAT.dwg
PLOT DATE: 01-06-26 PLOTTED BY: station23

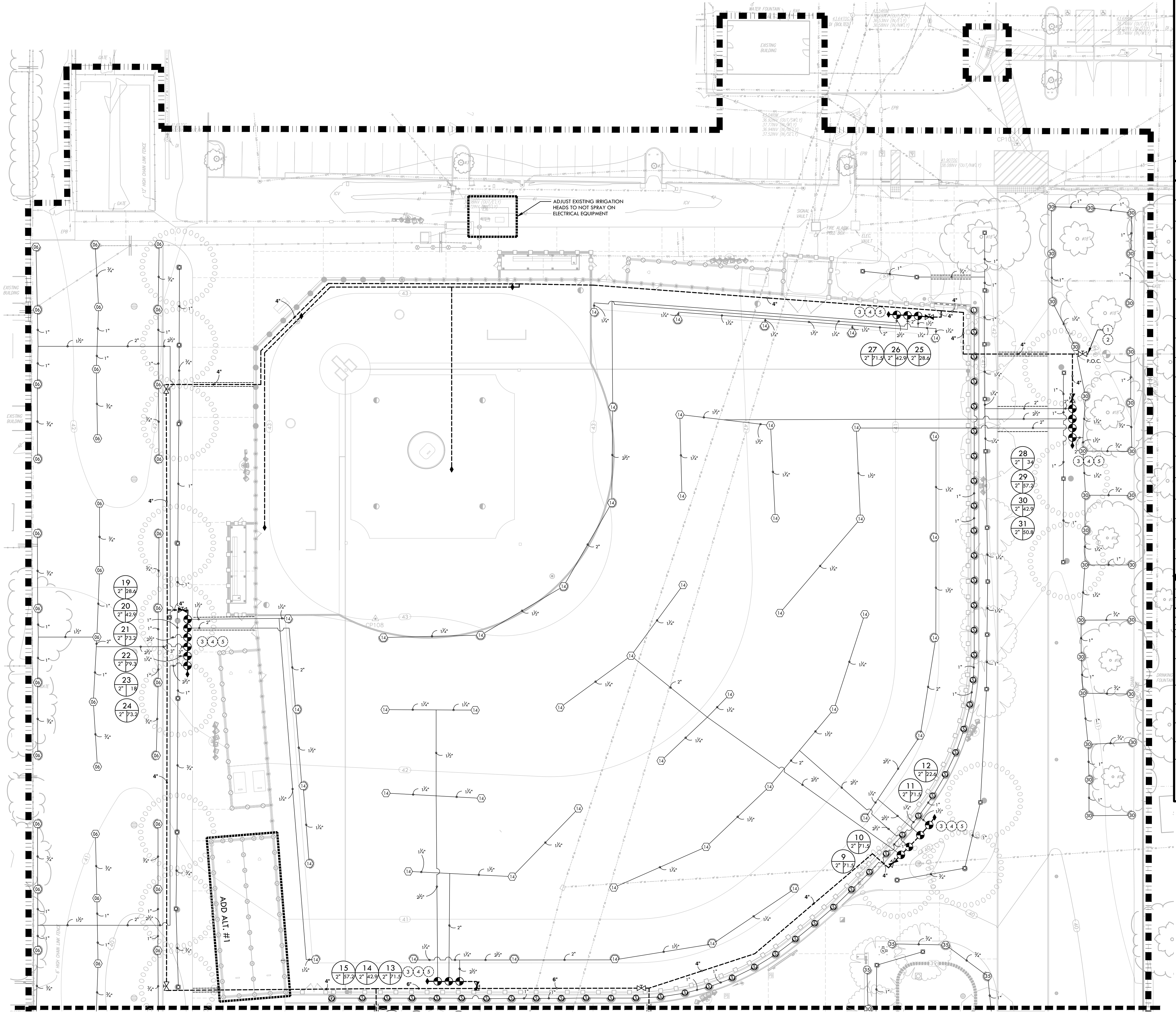

MATCHLINE - REFER TO SHEET L8.2

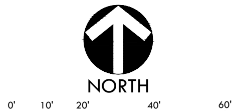

IRRIGATION NOTES

1. THIS SYSTEM IS DESIGNED TO OPERATE AT A MAXIMUM FLOW OF (300) GPM WITH A MINIMUM (60) STATIC P.S.I. AT THE POINT OF CONNECTION. CONTRACTOR SHALL VERIFY PRESSURE PRIOR TO BEGINNING WORK. CONTACT OWNER IMMEDIATELY SHOULD DISCREPANCY ARISE AND RE-DIRECT WORK TO AVOID DELAY.
2. CONTRACTOR SHALL COORDINATE ELECTRICAL SUPPLY WITH GENERAL CONTRACTOR. GENERAL CONTRACTOR SHALL STUB APPROPRIATE POWER SUPPLY IN VICINITY OF CONTROLLER LOCATION.
3. IRRIGATION SYSTEM DESIGN IS DIAGRAMMATIC. WHERE PIPING, VALVES, QUICK COUPLERS, ETC. ARE SHOWN OUTSIDE PLANTING AREAS, OR LIMIT OF WORK; INTENT IS FOR PIPING, VALVES, ETC., TO BE INSTALLED WITHIN PLANTING AREAS OF PROPERTY. INDICATE EXACT LOCATIONS OF IRRIGATION EQUIPMENT ON RECORD DRAWINGS. REFER TO SPECIFICATIONS.
4. CONTRACTOR SHALL PROGRAM CONTROLLER TO ENSURE PROPER IRRIGATION. BASED ON PLANT TYPE, EXPOSURE AND SEASON.
5. CONTRACTOR SHALL USE EXTREME CARE WHERE IT IS NECESSARY TO TRENCH NEAR EXISTING TREES. EXCAVATION IN AREAS EXHIBITING ROOT 3" AND LARGER SHALL BE DONE BY HAND. ROOTS 2" OR LARGER IN DIAMETER DAMAGED IN CONSTRUCTION SHALL BE CLEANLY CUT.
6. CONTRACTOR SHALL MAKE MINOR ADJUSTMENTS TO HEAD LOCATIONS IN FIELD AS NECESSARY.
7. CONTRACTOR SHALL REFER TO DETAILS AND SPECIFICATIONS FOR ADDITIONAL INFORMATION.
8. WHEN WORK HAS TO OCCUR UNDER THE DRIPLINE OF EXISTING TREES NOT SCHEDULED FOR REMOVAL, THE CONTRACTOR SHALL USE ALL POSSIBLE CARE TO AVOID INJURY TO THE TREES AND TREE ROOTS. GRADE IN LINES RADIAL TO THE EXISTING TREES RATHER THAN TANGENTIAL. ALL PARTIAL CUTS OR TEARS THROUGH ROOTS TWO INCHES IN DIAMETER AND LARGER SHALL BE CUT CLEAN. TRENCHES ADJACENT TO TREES SHALL BE FILLED WITHIN 24 HOURS AFTER EXCAVATION, BUT WHERE THIS IS NOT POSSIBLE, THE SIDE OF THE TRENCH ADJACENT TO THE TREE, AND ANY EXPOSED ROOTS SHALL BE KEPT SHADED AND MOST WITH DAMPENED BURLAP OR CANVAS.

IRRIGATION LEGEND

SYM.	MANUFAC.	MODEL NO./ DESCRIPTION	RAD.	GPM	PSI	DTL REF
Ⓛ Ⓢ Ⓡ	RAINBIRD	SHRUB ROTARY ON 12IN POP-UP R-VAN-STRIP 1812-SAM-P45	-	-	45	O D5.1
▣	RAINBIRD	ROOT WATERING SYSTEM WITH 4IN DIAMETER X 36IN. LONG WITH LOCKING GRATE, SEMI-RIGID MESH TUBE. CHECK VALVE AND SAND SOCK. RWS-B-C W/ RWS-SOCK 1400 SERIES	-	-	30	G D5.1
04	RAINBIRD	TURF ROTOR, 5IN. POP UP, STAINLESS STEEL RISER, STANDARD NOZZLE 8005-SS 04	33'	3.8	60	N D5.1
06	RAINBIRD	TURF ROTOR, 5IN. POP UP, STAINLESS STEEL RISER, STANDARD NOZZLE 8005-SS 06	38'	6.1	60	
08	RAINBIRD	TURF ROTOR, 5IN. POP UP, STAINLESS STEEL RISER, STANDARD NOZZLE 8005-SS 08	42'	8.4	60	
12	RAINBIRD	TURF ROTOR, 5IN. POP UP, STAINLESS STEEL RISER, STANDARD NOZZLE 8005-SS 12	50'	12	60	
14	RAINBIRD	TURF ROTOR, 5IN. POP UP, STAINLESS STEEL RISER, STANDARD NOZZLE 8005-SS 14	52'	14.3	60	
18	RAINBIRD	TURF ROTOR, 5IN. POP UP, STAINLESS STEEL RISER, STANDARD NOZZLE 8005-SS 18	55'	17.8	60	
㉚	RAINBIRD	SHRUB ROTOR, 6IN. POP UP, STAINLESS STEEL RISER, MPR NOZZLE 5006-PL-PC-SAM-R-SS-MPR 30	26'	-	35	
㉟	RAINBIRD	SHRUB ROTOR, 6IN. POP UP, STAINLESS STEEL RISER, MPR NOZZLE 5006-PL-PC-SAM-R-SS-MPR 35	29'	-	35	
◕	RAINBIRD	REMOTE CONTROL VALVE - PEB-PRS-D, SIZE PER PLAN				D D5.1
♦	RAINBIRD	QUICK COUPLING VALVE - 44-NP				C D5.1
⧓	HARCO	GASKET X GASKET IRON, STAINLESS STEEL, BRONZE SHUT OFF VALVE. LATERAL ISOLATION AVAILABLE IN 2IN. WITH VARIABLE RISER. GASKET X GASKT. EPDM SEAL				B D5.1
⋈	NIBCO	GATE VALVES 2.5" AND LARGER SHALL BE NIBCO F-619-RW, SAME SIZE AS MAINLINE PIPE WHERE LOCATED. RESILIENT WEDGE NON-RISING STEM FLOW CONTROL WITH IPS PUSH-ON ENDS				A D5.1
⧓	NIBCO	GATE VALVES 2" AND SMALLER SHALL BE NIBCO PR-113-K				
◕	EXISTING REMOTE CONTROL VALVE					
—IRR——IRR—	EXISTING MAINLINE TO REMAIN AND BE PROTECTED. CONTRACTOR TO VERIFY SIZE AND APPROXIMATE LOCATION PRIOR TO CONSTRUCTION.					
▬ ▬	LIMIT OF WORK					
——	LATERAL LINE - SCHEDULE 40 PVC PIPE & SOLVENT WELD FITTINGS, AT 18" DEPTH.					J D5.1
- - - -	MAIN LINE - SEE SPECIFICATIONS FOR CLASS AND FITTING AT 24" DEPTH - SIZE AS NOTED.					
======	SLEEVES	CLASS 200 PVC. SIZE TO BE TWICE THE SIZE OF TOTAL PIPE DIAMETERS WITHIN THE SLEEVE, OR AS NOTED, WITH 30" COVER.				
①	CONNECT PROPOSED MAIN LINE TO EXISTING MAIN LINE. CONTRACTOR SHALL BE RESPONSIBLE TO VERIFY LOCATION AND CONNECT LINE SIZED PIPE.					
②	POT HOLE AND LOCATE EXISTING MAIN TO RE-CONNECT TO EXISTING IRRIGATION TO STADIUM. IF EXISTING WIRES ARE DAMAGED FROM EXISTING CONTROLLER TO CONNECTION POINT INSTALL NEW LOW VOLTAGE WIRE TO THIS LOCATION WITHIN NEW 3" CONDUIT.					
③	MAIN LINE LOCATION IS DIAGRAMMATIC. PLACE IN PLANTING AREA WHERE POSSIBLE.					
④	VALVE BOX LOCATIONS ARE DIAGRAMMATIC. PLACE VALVE BOXES IN PLANTING AREA					
⑤	2" MAIN LINE BETWEEN LAST REMOTE CONTROL VALVE AND QUICK QOUPLER, TYP.					
P.O.C.	POINT OF CONNECTION					

1 / 2" / 37.7
- CONTROLLER STATION NUMBER
- APPROX. GPM FLOW THROUGH VALVE
- CONTROL VALVE SIZE

IDENTIFICATION STAMP
DIV. OF THE STATE ARCHITECT
APP: 02-123587 INC:
REVIEWED FOR
SS ☑ FLS ☑ ACS ☑
DATE: 01/16/2026

VERDE DESIGN
LANDSCAPE ARCHITECTURE
CIVIL ENGINEERING
SPORT PLANNING & DESIGN
1843 Iron Point Rd. Suite 140
Folsom, CA 95630
tel: 916.415.6554
fax: 916.415.6525
www.VerdeDesignInc.com

STAMP
REGISTERED LANDSCAPE ARCHITECT
MARK S. BAGINSKI
No. 4089
Signature
EXPIRATION DATE: JULY 2027
STATE OF CALIFORNIA

CONSULTANT

KEYMAP

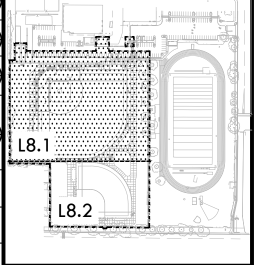

SHEET TITLE
IRRIGATON
PLAN -
BASEBALL FIELD

PROJECT NAME
LODI HIGH SCHOOL
ATHLETIC FIELD
IMPROVEMENTS

PROJECT ADDRESS
3 S PACIFIC AVE
LODI, CA
95242

SUBMITTAL	DATE
50% DSA SUBMITTAL	07/31/25
100% DSA SUBMITTAL	09/25/25
DSA BACKCHECK SUBMITTAL	12/17/25
DSA BACKCHECK SUBMITTAL	01/08/26

NO.	REVISIONS	DATE
△		
△		
△		
△		
△		
△		

DRAWN BY: AW
CHECKED BY: CS/MB
DATE ISSUED: 01/08/2026
SCALE: 1"=20'-0"
PROJ. NO.: 2502700
SHEET NO.: L8.1

IRRIGATION PLAN - BASEBALL FIELD

ALL IDEAS, DESIGNS, ARRANGEMENTS, AND PLANS INDICATED OR REPRESENTED BY THIS DRAWING ARE OWNED BY AND THE PROPERTY OF VERDE DESIGN, INC. AND WERE CREATED, EVOLVED, AND DEVELOPED FOR USE ON AND IN CONNECTION WITH THE SPECIFIED PROJECT. NONE OF SUCH IDEAS, DESIGNS, ARRANGEMENTS OR PLANS SHALL BE USED, REPRODUCED, OR PUBLISHED BY ANY METHOD, IN WHOLE OR IN PART, OR DISCLOSED TO ANY PERSON, FIRM, OR CORPORATION FOR ANY PURPOSE WHATSOEVER WITHOUT WRITTEN PERMISSION OF VERDE DESIGN, INC.

DRAWING NAME: Y:\Projects-FO\2025\2502700 - Lodi HS Baseball and Softball Field\CAD_IRR.dwg
PLOT DATE: 12-11-25 PLOTTED BY: station45

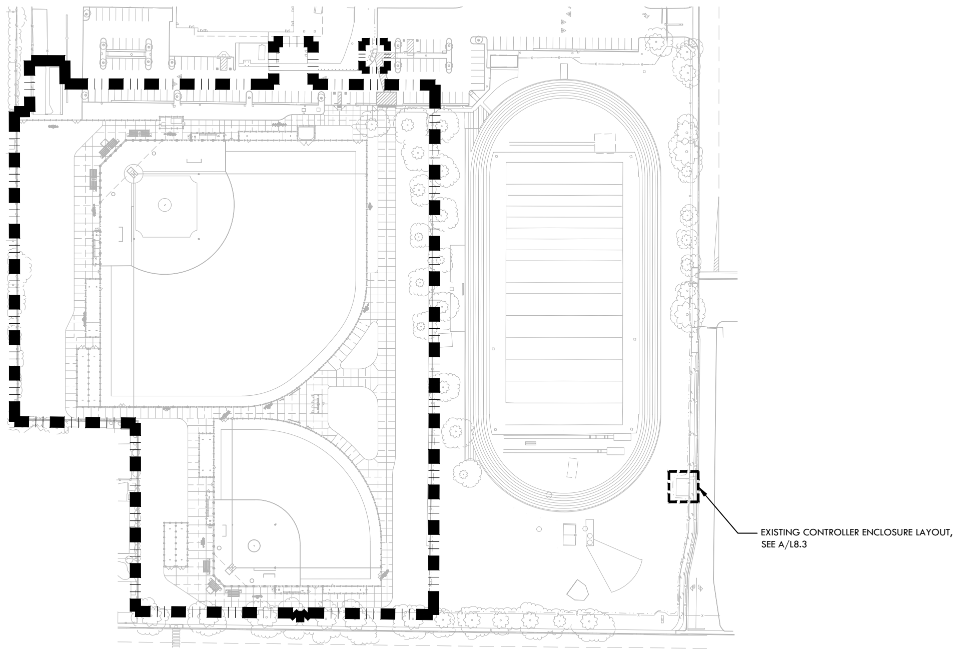

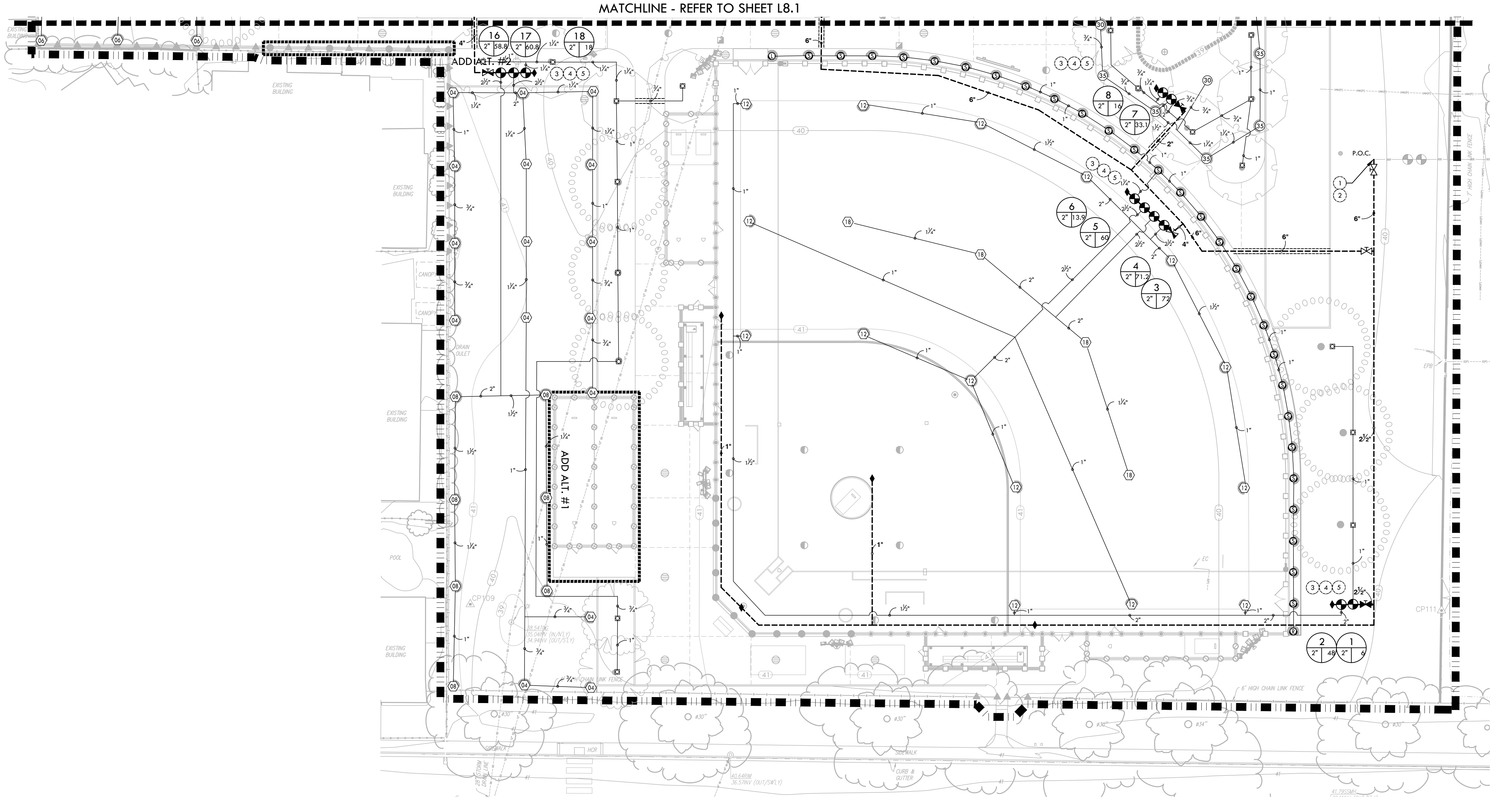

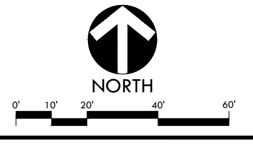

IRRIGATION NOTES

1. THIS SYSTEM IS DESIGNED TO OPERATE AT A MAXIMUM FLOW OF (300) GPM WITH A MINIMUM (60) STATIC P.S.I. AT THE POINT OF CONNECTION. CONTRACTOR SHALL VERIFY PRESSURE PRIOR TO BEGINNING WORK. CONTACT OWNER IMMEDIATELY SHOULD DISCREPANCY ARISE AND RE-DIRECT WORK TO AVOID DELAY.
2. CONTRACTOR SHALL COORDINATE ELECTRICAL SUPPLY WITH GENERAL CONTRACTOR. GENERAL CONTRACTOR SHALL STUB APPROPRIATE POWER SUPPLY IN VICINITY OF CONTROLLER LOCATION.
3. IRRIGATION SYSTEM DESIGN IS DIAGRAMMATIC. WHERE PIPING, VALVES, QUICK COUPLERS, ETC. ARE SHOWN OUTSIDE PLANTING AREAS, OR LIMIT OF WORK; INTENT IS FOR PIPING, VALVES, ETC., TO BE INSTALLED WITHIN PLANTING AREAS OF PROPERTY. INDICATE EXACT LOCATIONS OF IRRIGATION EQUIPMENT ON RECORD DRAWINGS. REFER TO SPECIFICATIONS.
4. CONTRACTOR SHALL PROGRAM CONTROLLER TO ENSURE PROPER IRRIGATION. BASED ON PLANT TYPE, EXPOSURE AND SEASON.
5. CONTRACTOR SHALL USE EXTREME CARE WHERE IT IS NECESSARY TO TRENCH NEAR EXISTING TREES. EXCAVATION IN AREAS EXHIBITING ROOT 3" AND LARGER SHALL BE DONE BY HAND. ROOTS 2" OR LARGER IN DIAMETER DAMAGED IN CONSTRUCTION SHALL BE CLEANLY CUT.
6. CONTRACTOR SHALL MAKE MINOR ADJUSTMENTS TO HEAD LOCATIONS IN FIELD AS NECESSARY.
7. CONTRACTOR SHALL REFER TO DETAILS AND SPECIFICATIONS FOR ADDITIONAL INFORMATION.
8. WHEN WORK HAS TO OCCUR UNDER THE DRIPLINE OF EXISTING TREES NOT SCHEDULED FOR REMOVAL, THE CONTRACTOR SHALL USE ALL POSSIBLE CARE TO AVOID INJURY TO THE TREES AND TREE ROOTS. GRADE IN LINES RADIAL TO THE EXISTING TREES RATHER THAN TANGENTIAL. ALL PARTIAL CUTS OR TEARS THROUGH ROOTS TWO INCHES IN DIAMETER AND LARGER SHALL BE CUT CLEAN. TRENCHES ADJACENT TO TREES SHALL BE FILLED WITHIN 24 HOURS AFTER EXCAVATION, BUT WHERE THIS IS NOT POSSIBLE, THE SIDE OF THE TRENCH ADJACENT TO THE TREE, AND ANY EXPOSED ROOTS SHALL BE KEPT SHADED AND MOST WITH DAMPENED BURLAP OR CANVAS.

IRRIGATION LEGEND

SYM.	MANUFAC.	MODEL NO./ DESCRIPTION	RAD.	GPM	PSI	DTL REF
Ⓛ Ⓢ Ⓡ	RAINBIRD	SHRUB ROTARY ON 12IN POP-UP R-VAN-STRIP 1812-SAM-P45	-	-	45	O/D5.1
◘	RAINBIRD	ROOT WATERING SYSTEM WITH 4IN DIAMETER X 36IN. LONG WITH LOCKING GRATE, SEMI-RIGID MESH TUBE. CHECK VALVE AND SAND SOCK. RWS-B-C W/ RWS-SOCK 1400 SERIES	-	-	30	G/D5.1
04	RAINBIRD	TURF ROTOR, 5IN. POP UP, STAINLESS STEEL RISER, STANDARD NOZZLE 8005-SS 04	33'	3.8	60	N/D5.1
06	RAINBIRD	TURF ROTOR, 5IN. POP UP, STAINLESS STEEL RISER, STANDARD NOZZLE 8005-SS 06	38'	6.1	60	
08	RAINBIRD	TURF ROTOR, 5IN. POP UP, STAINLESS STEEL RISER, STANDARD NOZZLE 8005-SS 08	42'	8.4	60	
12	RAINBIRD	TURF ROTOR, 5IN. POP UP, STAINLESS STEEL RISER, STANDARD NOZZLE 8005-SS 12	50'	12	60	
14	RAINBIRD	TURF ROTOR, 5IN. POP UP, STAINLESS STEEL RISER, STANDARD NOZZLE 8005-SS 14	52'	14.3	60	
18	RAINBIRD	TURF ROTOR, 5IN. POP UP, STAINLESS STEEL RISER, STANDARD NOZZLE 8005-SS 18	55'	17.8	60	
30	RAINBIRD	SHRUB ROTOR, 6IN. POP UP, STAINLESS STEEL RISER, MPR NOZZLE 5006-PL-PC-SAM-R-SS-MPR 30	26'	-	35	
35	RAINBIRD	SHRUB ROTOR, 6IN. POP UP, STAINLESS STEEL RISER, MPR NOZZLE 5006-PL-PC-SAM-R-SS-MPR 35	29'	-	35	
◕	RAINBIRD	REMOTE CONTROL VALVE - PEB-PRS-D, SIZE PER PLAN				D/D5.1
◆	RAINBIRD	QUICK COUPLING VALVE - 44-NP				C/D5.1
⋈	HARCO	GASKET X GASKET IRON, STAINLESS STEEL, BRONZE SHUT OFF VALVE. LATERAL ISOLATION AVAILABLE IN 2IN. WITH VARIABLE RISER. GASKET X GASKT. EPDM SEAL				B/D5.1
⋈	NIBCO	GATE VALVES 2.5" AND LARGER SHALL BE NIBCO F-619-RW, SAME SIZE AS MAINLINE PIPE WHERE LOCATED. RESILIENT WEDGE NON-RISING STEM FLOW CONTROL WITH IPS PUSH-ON ENDS				A/D5.1
⋈	NIBCO	GATE VALVES 2" AND SMALLER SHALL BE NIBCO PR-113-K				
◔	EXISTING REMOTE CONTROL VALVE					
—IRR—IRR—	EXISTING MAINLINE TO REMAIN AND BE PROTECTED. CONTRACTOR TO VERIFY SIZE AND APPROXIMATE LOCATION PRIOR TO CONSTRUCTION.					
▪	LIMIT OF WORK					
—	LATERAL LINE - SCHEDULE 40 PVC PIPE & SOLVENT WELD FITTINGS, AT 18" DEPTH.					J/D5.1
– – –	MAIN LINE - SEE SPECIFICATIONS FOR CLASS AND FITTING AT 24" DEPTH - SIZE AS NOTED.					
- - -	SLEEVES	CLASS 200 PVC. SIZE TO BE TWICE THE SIZE OF TOTAL PIPE DIAMETERS WITHIN THE SLEEVE, OR AS NOTED, WITH 30" COVER.				
①	CONNECT PROPOSED MAIN LINE TO EXISTING MAIN LINE. CONTRACTOR SHALL BE RESPONSIBLE TO VERIFY LOCATION AND CONNECT LINE SIZED PIPE.					
②	POT HOLE AND LOCATE EXISTING MAIN TO RE-CONNECT TO EXISTING IRRIGATION TO STADIUM. IF EXISTING WIRES ARE DAMAGED FROM EXISTING CONTROLLER TO CONNECTION POINT INSTALL NEW LOW VOLTAGE WIRE TO THIS LOCATION WITHIN NEW 3" CONDUIT.					
③	MAIN LINE LOCATION IS DIAGRAMMATIC. PLACE IN PLANTING AREA WHERE POSSIBLE.					
④	VALVE BOX LOCATIONS ARE DIAGRAMMATIC. PLACE VALVE BOXES IN PLANTING AREA					
⑤	2" MAIN LINE BETWEEN LAST REMOTE CONTROL VALVE AND QUICK QOUPLER, TYP.					
P.O.C.	POINT OF CONNECTION					

1 / 2" 37.7
- CONTROLLER STATION NUMBER
- APPROX. GPM FLOW THROUGH VALVE
- CONTROL VALVE SIZE

IDENTIFICATION STAMP
DIV. OF THE STATE ARCHITECT
APP: 02-123587 INC:
REVIEWED FOR
SS ☑ FLS ☑ ACS ☑
DATE: 01/16/2026

VERDE DESIGN
LANDSCAPE ARCHITECTURE
CIVIL ENGINEERING
SPORT PLANNING & DESIGN
1843 Iron Point Rd. Suite 140
Folsom, CA 95630
tel: 916.415.6554
fax: 916.415.6525
www.VerdeDesignInc.com

STAMP

REGISTERED LANDSCAPE ARCHITECT
MARK S. BAGINSKI
No. 4089
Signature
EXPIRATION DATE: JULY 2027
STATE OF CALIFORNIA

CONSULTANT

KEYMAP

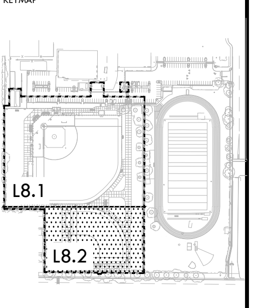

SHEET TITLE

IRRIGATON
PLAN -
SOFTBALL FIELD

PROJECT NAME

LODI HIGH SCHOOL
ATHLETIC FIELD
IMPROVEMENTS

PROJECT ADDRESS

3 S PACIFIC AVE
LODI, CA
95242

SUBMITTAL	DATE
50% DSA SUBMITTAL	07/31/25
100% DSA SUBMITTAL	09/25/25
DSA BACKCHECK SUBMITTAL	12/17/25
DSA BACKCHECK SUBMITTAL	01/08/26

NO.	REVISIONS	DATE
△		
△		
△		
△		
△		
△		

DRAWN BY: AW
CHECKED BY: CS/MB
DATE ISSUED: 01/08/2026
SCALE: 1"=20'-0"
PROJ. NO.: 2502700
SHEET NO.: L8.2

IRRIGATION PLAN - SOFTBALL FIELD

ALL IDEAS, DESIGNS, ARRANGEMENTS, AND PLANS INDICATED OR REPRESENTED BY THIS DRAWING ARE OWNED BY AND THE PROPERTY OF VERDE DESIGN, INC. AND WERE CREATED, EVOLVED, AND DEVELOPED FOR USE ON AND IN CONNECTION WITH THE SPECIFIED PROJECT. NONE OF SUCH IDEAS, DESIGNS, ARRANGEMENTS OR PLANS SHALL BE USED, REPRODUCED, OR PUBLISHED BY ANY METHOD, IN WHOLE OR IN PART, OR DISCLOSED TO ANY PERSON, FIRM, OR CORPORATION FOR ANY PURPOSE WHATSOEVER WITHOUT WRITTEN PERMISSION OF VERDE DESIGN, INC.

DRAWING NAME: Y:\Projects-FO\2025\2502700 - Lodi HS Baseball and Softball Field\CAD_IRR.dwg
PLOT DATE: 12-11-25 PLOTTED BY: station45

GENERAL IRRIGATION NOTES

1. THIS SYSTEM IS DESIGNED WITH A BOOSTER PUMP TO OPERATE AT A MAXIMUM FLOW OF (XX) GPM WITH A MINIMUM (50) STATIC PSI AT THE POINT OF CONNECTION. CONTRACTOR SHALL VERIFY PRESSURE PRIOR TO BEGINNING WORK. CONTACT OWNER IMMEDIATELY SHOULD DISCREPANCY ARISE AND RE-DIRECT WORK TO AVOID DELAY. IF PRESSURE EXCEEDS 90 PSI, CONTRACTOR SHALL INSTALL PRESSURE REDUCING EQUIPMENT AS REQUIRED. FAILURE TO DO SO WILL RESULT IN THE CONTRACTOR BEING RESPONSIBLE FOR ANY NECESSARY CHANGES DUE TO THIS DIFFERENCE.

2. THE CONTRACTOR SHALL REVIEW RELATED DRAWINGS AND SHALL ENSURE COORDINATION WITH ALL APPLICABLE TRADES PRIOR TO SUBMITTING BID. DO NOT BID, ORDER MATERIALS OR INSTALL ANY OR ALL OF SYSTEM BEFORE REVIEWING AND READING THE IRRIGATION PLANS, NOTES, AND SPECIFICATIONS IN THEIR ENTIRETY. THE CONTRACTOR SHALL ASSUME FULL RESPONSIBILITY FOR ALL CHANGES, REVISIONS AND OR ADDITIONS TO SYSTEM DUE TO FAILURE TO DO SO.

3. IT IS THE RESPONSIBILITY OF THE CONTRACTOR TO FAMILIARIZE HIMSELF WITH ALL GRADE DIFFERENCES, LOCATION OF WALLS, RETAINING WALLS, ETC. HE SHALL COORDINATE HIS WORK WITH THE GENERAL CONTRACTOR AND OTHER SUBCONTRACTORS FOR THE LOCATION AND THE INSTALLATION OF PIPE SLEEVES THROUGH WALLS, UNDER ROADWAYS, PAVING, STRUCTURES, ETC. CONTRACTOR TO VERIFY THE LOCATION OF EXISTING UNDERGROUND UTILITIES AND STRUCTURES PRIOR TO THE EXCAVATION OF TRENCHES. CONTRACTOR IS TO REPAIR ANY DAMAGE CAUSED BY HIS WORK AT NO ADDITIONAL COST TO THE OWNER. THE CONTRACTOR SHALL NOTIFY UNDERGROUND SERVICE ALERT AT 811 AT LEAST 48 HOURS PRIOR TO ANY EXCAVATION.

4. THIS DESIGN IS DIAGRAMMATIC. ALL PIPING, VALVES, ETC. SHOWN WITHIN PAVED AREAS OR OUTSIDE LIMIT OF WORK IS FOR DESIGN CLARITY ONLY AND SHALL BE INSTALLED IN PLANTING AREAS WHERE POSSIBLE. AVOID ANY CONFLICTS BETWEEN THE IRRIGATION SYSTEM, PLANTING AND ARCHITECTURAL FEATURES. PARALLEL PIPES MAY BE INSTALLED IN COMMON TRENCH. PIPES ARE NOT TO BE INSTALLED DIRECTLY ABOVE ONE ANOTHER.

5. DO NOT WILLFULLY INSTALL THE IRRIGATION SYSTEM AS SHOWN ON THE DRAWINGS WHEN IT IS OBVIOUS IN THE FIELD THAT OBSTRUCTIONS, GRADE DIFFERENCES OR AREAS DIFFER FROM THE PLANS OR MIGHT NOT HAVE BEEN KNOWN DURING THE ENGINEERING. SUCH OBSTRUCTIONS OR DIFFERENCES SHOULD BE BROUGHT TO THE ATTENTION OF THE OWNER'S REPRESENTATIVE. IN THE EVENT THAT THIS NOTIFICATION IS NOT PERFORMED, THE CONTRACTOR SHALL ASSUME FULL RESPONSIBILITY FOR ANY REVISIONS NECESSARY.

GENERAL IRRIGATION NOTES

6. WHEN VERTICAL OBSTRUCTIONS (STREET LIGHTS, TREES, FIRE HYDRANTS, ETC.) INTERFERE WITH THE SPRAY PATTERN OF THE HEADS SO AS TO PREVENT PROPER COVERAGE, THE CONTRACTOR SHALL FIELD ADJUST THE IRRIGATION SYSTEM BY INSTALLING A QUARTER. THIRD OR HALF CIRCLE HEAD AT THE SIDES OF THE OBSTRUCTION SO AS TO PROVIDE PROPER COVERAGE. ALL ADJUSTMENTS SHALL BE MADE AT NO ADDITIONAL COST TO THE OWNER.

7. DUE TO THE SCALE OF THE DRAWINGS, IT IS NOT POSSIBLE TO INDICATE ALL OFFSETS, FITTINGS, SLEEVES, ETC., WHICH MAY BE REQUIRED. THE CONTRACTOR SHALL CAREFULLY INVESTIGATE THE FINISHED CONDITIONS AFFECTING ALL OF HIS WORK AND PLAN HIS WORK ACCORDINGLY, FURNISHING SUCH FITTINGS, ETC., AS MAY BE REQUIRED TO MEET SUCH CONDITIONS. DRAWINGS ARE GENERALLY DIAGRAMMATIC AND INDICATIVE OF THE WORK TO BE INSTALLED. THE WORK SHALL BE INSTALLED IN SUCH A MANNER AS TO AVOID CONFLICTS BETWEEN IRRIGATION SYSTEM, PLANTING, SITE, AND ARCHITECTURAL FEATURES.

8. THE CONTRACTOR SHALL FLUSH AND ADJUST ALL SPRINKLER HEADS FOR OPTIMUM PERFORMANCE AND TO PREVENT OVERSPRAY ONTO WALKS, ROADWAYS AND/OR BUILDINGS AS MUCH AS POSSIBLE. THIS SHALL INCLUDE SELECTING THE BEST DEGREE OF FIXED ARC (OR AN ADJUSTABLE ARC IF FIXED ARC DOES NOT MATCH THE ARC TO BE IRRIGATED) TO FIT THE SITE CONDITIONS AND TO THROTTLE THE FLOW CONTROL AT EACH VALVE TO OBTAIN THE OPTIMUM OPERATING PRESSURE FOR EACH CONTROL ZONE. ALL MAIN LINES SHALL BE FLUSHED PRIOR TO THE INSTALLATION OF IRRIGATION HEADS. AT COMPLETION OF INSTALLATION, AND AT 30 DAYS AFTER INSTALLATION, EACH ZONE SHALL BE FLUSHED TO ELIMINATE GLUE AND DIRT PARTICLES FROM THE LINES.

9. CONTRACTOR IS TO NOTIFY ENGINEER OF ANY ASPECTS OF LAYOUT THAT WILL PROVIDE INCOMPLETE OR INSUFFICIENT WATER COVERAGE OF PLANT MATERIAL AND IS NOT TO PROCEED UNTIL INSTRUCTIONS ARE OBTAINED.

10. CONTRACTOR SHALL USE EXTREME CARE WHERE IT IS NECESSARY TO TRENCH NEAR EXISTING TREES. EXCAVATION IN AREAS EXHIBITING ROOT 2" AND LARGER SHALL BE DONE BY HAND. ROOTS 2" OR LARGER IN DIAMETER DAMAGED DURING CONSTRUCTION SHALL BE CLEANLY CUT. TRENCHES ADJACENT TO TREE SHOULD BE CLOSED WITHIN 24 HOURS; WHERE THIS IS NOT POSSIBLE, THE SIDE OF THE TRENCH ADJACENT TO THE TREE AND EXPOSED ROOTS SHALL BE KEPT SHADED AND WET WITH MOISTENED BURLAP OR CANVAS.

GENERAL IRRIGATION NOTES

11. CONTRACTOR SHALL PROGRAM CONTROLLER TO ENSURE PROPER IRRIGATION. BASED ON “WOCULS” PLANT FACTOR WATER NEEDS, SOLAR EXPOSURE, SLOPE, SOIL TYPE, AND SEASON.

12. CONTRACTOR TO SPLICE EXISTING CONTROL WIRES TO NEW CONTROL WIRE RUN IN VALVE BOX OR SPLICE BOX. CONTRACTOR TO VERIFY EXISTING CONTROL WIRES TO CONTROL VALVES AND ENSURE SPLICE WILL MAINTAIN FULL OPERATION OF EXISTING CONTROL VALVES TO REMAIN. CONTRACTOR TO COORDINATE RE-NUMBERING OF VALVE STATIONS WITH OWNER'S MAINTENANCE.

13. ORIGINAL IRRIGATION SYSTEM DESIGN SHOWN ON SHEET LX.X, AND ON THE EXISTING CONDITIONS SURVEY PLAN, SHEET LX.X, ARE FOR REFERENCE ONLY, AND DOES NOT NECESSARILY REPRESENT WHAT WAS INSTALLED OR WHAT MAY EXIST AT THIS TIME. SYSTEM COMPONENTS, MANUFACTURES, MODEL NO'S, LOCATION, SIZE AND DEPTH ARE TO BE DETERMINED BY THE CONTRACTOR PRIOR TO COMMENCING ANY CONSTRUCTION WORK. ANY DAMAGE TO THE EXISTING SYSTEM TO REMAIN, OR ADDITIONAL WORK INCURRED DUE TO DISCREPANCIES BETWEEN SHEET LX.X AND EXISTING CONDITIONS SHALL BE THE RESPONSIBILITY OF THE CONTRACTOR. THE ASSUMPTION THAT LX.X IS CORRECT WILL BE THE RESPONSIBILITY OF THE CONTRACTOR. THERE WILL BE NO CHANGE ORDERS APPROVED DUE TO THE LACK OF THE CONTRACTORS SITE INVESTIGATION, LOGGING OF PERTINENT INFORMATION, AND MOVING FORWARD WITHOUT DETERMINING THE CORRECT DISPOSITION OF THE EXISTING IRRIGATION SYSTEM.

14. DUE TO THE SITE'S PREVAILING WIND CONDITIONS, MAXIMUM SPACING OF SPRINKLERS (OTHER THAN BUBBLERS OR DRIP) SHALL NOT EXCEED 40% OF THE DIAMETER. USE TRIANGULAR SPACING WHEREVER POSSIBLE CONTRACTOR SHALL MAKE MINOR ADJUSTMENTS TO HEAD LOCATIONS IN FIELD AS NECESSARY TO PROVIDE EVEN, ADEQUATE, HEAD TO HEAD COVERAGE.

15. REFER TO DETAILS AND SPECIFICATIONS FOR ADDITIONAL INFORMATION.

IRRIGATION AUDIT, SURVEY AND IRRIGATION WATER USE ANALYSIS NOTES

1. ALL LANDSCAPE IRRIGATION AUDITS SHALL BE CONDUCTED BY A THIRD PARTY CERTIFIED LANDSCAPE IRRIGATION AUDITOR. LANDSCAPE AUDITS SHALL NOT BE CONDUCTED BY THE PERSON WHO DESIGNED THE LANDSCAPE OR INSTALLED THE LANDSCAPE.

2. IN LARGE PROJECTS OR PROJECTS WITH MULTIPLE LANDSCAPE INSTALLATIONS (I.E. PRODUCTION HOME DEVELOPMENTS) AN AUDITING RATE OF 1 IN 7 LOTS OR APPROXIMATELY 15% OF THE PROJECTS IRRIGATION VALVES SHALL SATISFY THIS REQUIREMENT.

3. FOR NEW CONSTRUCTION AND REHABILITATED LANDSCAPE PROJECTS INSTALLED AFTER DECEMBER 1, 2015, AS DESCRIBED IN SECTION 14.18.030.

4. THE PROJECT APPLICANT SHALL SUBMIT AN IRRIGATION AUDIT REPORT WITH THE CERTIFICATE OF COMPLETION TO THE LOCAL AGENCY THAT MAY INCLUDE, BUT IS NOT LIMITED TO: INSPECTION, SYSTEM TUNE UP, SYSTEM TEST DISTRIBUTION UNIFORMITY, REPORTING OVERSPRAY OR RUN OFF THAT CAUSES OVERLAND FLOW, AND PREPARATION OF AN IRRIGATION SCHEDULE, INCLUDING CONFIGURING IRRIGATION CONTROLLERS WITH APPLICATION RATE, SOIL TYPES, PLANT FACTORS, SLOPE, EXPOSURE AND ANY OTHER FACTORS NECESSARY FOR ACCURATE PROGRAMING; (ENVIRONMENTAL UTILITIES-WELO)

PRESSURE LOSS CALCULATIONS

Furthest Head

Equipment

Type	Description	psi
Meter	City of Lodi Meter	7.20
Backflow and Flow Sensor	Febco 4"	9.00
Isolation Valves	Harco Gasket x Gasket	1.00
Electric Remote Control Valve	2" Rain Bird PEB-PRS-D @ 73.2 GPM	4.50
POC Plumbing (5% of equipment)		1.09

Piping

Pipe	Description	Linear Feet	Loss/100'	Subtotal	psi
Class 200	6"	879	0.28	2.46	
Sch. 40	4"	311	0.15	0.47	
Sch. 40	3"	17	0.56	0.10	
Sch. 40	2.5" @73.2 GPM	165	1.53	2.52	
Sch. 40	2" @48.8 GPm	31	1.83	0.57	
Sch. 40	1 1/2" @24.4 GPM	30	1.6	0.48	
Sch. 40	1" @12.2 GPM	51	0.44	0.22	
		Total Mainline Loss:			6.82

Pipe fittings and bends *(10% of pipe losses)*	0.68

Elevation Change

	Elevation	Multiplier	Loss / Gain	psi
(difference in elevation between point of connection and irrigation head)	0	0.43	0	0.00

Total System Pressure Loss: 30.29

Calculations

Static Pressure *(at point of connection)*	60.00
Buffer *(-5% of static pressure due to system fluctuations)*	3.00
Available pressure *(static pressure -buffer -total system pressure loss)*	**26.71**
Pressure required *(at irrigation head)*	35.00
pressure required or Surplus pressure *(available pressure -pressure required)*	-8.29

WATER EFFICIENT LANDSCAPE CALCULATIONS

WATER EFFICIENT LANDSCAPE CALCULATIONS

PROJECT	Lodi HS Baseball and Softball Field
TOTAL LANDSCAPE AREA (SF)	162,216
TOTAL IRRIGATED LANDSCAPE AREA (SF)	58,043
TOTAL IRRIGATED SPECIAL LANDSCAPE AREA (SF)	104,173
HISTORIC ETo (INCHES/YEAR)	55.30

MAXIMUM ANNUAL WATER ALLOWANCE (MAWA)

MAWA = (ETo)(0.62) [(0.7xLA) + ((0.3)xSLA)]

MAWA = 1,393,044 GALS/YEAR

ESTIMATED TOTAL WATER USE (ETWU)

ETWU = (ETo)(0.62) [((PFxHA)/(IE)+SLA)]

HYDROZONE/ IRRIGATION METHOD	PLANT FACTOR (PF)	IRRIGATION EFFICIENCY (IE)	AREA (SQ FT) (HA)	(PFxHA)/IE
Regular Landscape Areas				
BIO RETENTION-ROTARY - MED	0.5	0.75	5,142	3,428
BIOFILTRATION SOD - LOW	0.3	0.81	4,095	1,517
NO MOW HYDROSEED - MED	0.5	0.75	39,887	26,591
TRESS - BUBBLER - LOW	0.3	0.81	225	83
TRESS - BUBBLER - MEDIUM	0.5	0.75	925	617
TRESS - ROTARY - MED	0.5	0.75	7,769	5,179
		TOTAL	**58,043**	**37,415**
Special Landscape Areas - Exempt				
SPORTS FIELD TURF - HIGH	0.9	0.75	104,173	125,008
		TOTAL	**104,173**	**125,008**

ETWU = 1,282,822 GAL/YEAR

UNDER MAWA = 110,221 GAL/YEAR

WATERING SCHEDULE

HYDROZONE DATA

VALVE	DESCRIPTION (ORIENTATION, WATER USE)	KS	KD	KMC	KL	IRR TYPE	IE	PR	SOIL TYPE	BIR	AW	RZ	PAW	MAD	AD	AREA (SF)	% OF LANDSCAPE
19	Turf Area, Baseball Field, High Water Use	0.8	1.0	1.0	0.80	Overhead	0.75	2.04	Silt	0.5	0.17	4	0.68	40%	0.272	N/A	N/A
20	Turf Area, Baseball Field, High Water Use	0.8	1.0	1.0	0.80	Overhead	0.75	1.12	Silt	0.5	0.17	4	0.68	40%	0.272	N/A	N/A
21	No Mow Area, North, Medium Water Use	0.5	1.0	1.0	0.50	Overhead	0.75	0.91	Silt	0.5	0.17	12	2.04	40%	0.816	26997	16.63%
22	No Mow Area, North, Medium Water Use	0.5	1.0	1.0	0.50	Overhead	0.75	0.70	Silt	0.5	0.17	12	2.04	40%	0.816	N/A	N/A
23	Tree Area, No Mow North, Medium Water Use	0.5	0.8	1.3	0.52	Bubbler	0.81	3.49	Silt	0.5	0.17	24	4.08	40%	1.632	225	0.14%
24	No Mow Area, North, Medium Water Use	0.5	1.0	1.0	0.50	Overhead	0.75	0.97	Silt	0.5	0.17	12	2.04	40%	0.816	N/A	N/A
25	Turf Area, Baseball Field, High Water Use	0.8	1.0	1.0	0.80	Overhead	0.75	2.16	Silt	0.5	0.17	4	0.68	40%	0.272	N/A	N/A
26	Turf Area, Baseball Field, High Water Use	0.8	1.0	1.0	0.80	Overhead	0.75	1.05	Silt	0.5	0.17	4	0.68	40%	0.272	N/A	N/A
27	Turf Area, Baseball Field, High Water Use	0.8	1.0	1.0	0.80	Overhead	0.75	1.04	Silt	0.5	0.17	4	0.68	40%	0.272	N/A	N/A
28	Tree Area, Fire Lane, Medium Water Use	0.8	1.0	1.3	1.04	Bubbler	0.81	3.56	Silt	0.5	0.17	24	4.08	40%	1.632	250	0.15%
29	Turf Area, Baseball Field, High Water Use	0.8	1.0	1.0	0.80	Overhead	0.75	0.51	Silt	0.5	0.17	4	0.68	40%	0.272	N/A	N/A
30	Turf Area, Baseball Field, High Water Use	0.8	1.0	1.0	0.80	Overhead	0.75	0.52	Silt	0.5	0.17	4	0.68	40%	0.272	N/A	N/A
31	Existing Tree Area, Medium Water Use	0.5	1.0	1.0	0.50	MultiStrm	0.81	0.79	Silt	0.5	0.17	36	6.12	40%	2.448	7769	4.79%
															Total Irrigated Area:	35241	22%

LEGEND: KS=SPECIES COEFFICENT, KD=DENSITY COEFFICENT, KMC-MICRO-CLIMATE COEFFICIENT, KL=LANDSCAPE COEFFCIENT, IE= IRRIGATION EFFICIENCY, PR = PRECIPITATION RATE, BIR = BASIC INTAKE RATE, AW = AVAILABLE WATER, RZ = ROOT ZONE, PAW = PLANT AVAILABLE WATER, MAD = MANAGED ALLOWABLE DEPLETION (%), AD = ALLOWABLE DEPLETION (INCHES).

WATERING SCHEDULE

Zone	Description			Jan	Feb	Mar	Apr	May	Jun	Jul	Aug	Sep	Oct	Nov	Dec
19	Turf Area, Baseball Field, High Water Use		Days / Week	0	0	2	5	7	7	7	7	5	5	1	0
			Cycles / Day	0	0	1	1	1	1	1	1	1	1	1	0
	Max. Minutes / Cycle	15	Min. / Cycle	0	0	7	7	7	8	8	7	8	5	2	0
20	Turf Area, Baseball Field, High Water Use		Days / Week	0	0	2	5	7	7	7	7	5	5	1	0
			Cycles / Day	0	0	1	1	1	1	1	1	1	1	1	0
	Max. Minutes / Cycle	27	Min. / Cycle	0	0	12	12	12	15	15	13	14	8	3	0
21	No Mow Area, North, Medium Water Use		Days / Week	0	0	1	5	7	7	7	7	5	5	1	0
			Cycles / Day	0	0	1	1	1	1	1	1	1	1	1	0
	Max. Minutes / Cycle	33	Min. / Cycle	0	0	19	9	10	12	12	10	11	6	2	0
22	No Mow Area, North, Medium Water Use		Irr. Days / Wk	0	0	1	5	7	7	7	7	5	5	1	0
			Cycles / Day	0	0	1	1	1	1	1	1	1	1	1	0
	Max. Minutes / Cycle	43	Min. / Cycle	0	0	24	12	12	15	15	13	14	8	3	0
23	Tree Area, No Mow North, Medium Water Use		Days / Week	0	0	1	5	7	7	7	7	5	5	1	0
			Cycles / Day	0	0	1	1	1	1	1	1	1	1	1	0
	Max. Minutes / Cycle	9	Min. / Cycle	0	0	5	3	3	3	3	3	3	2	1	0
24	No Mow Area, North, Medium Water Use		Days / Week	0	0	1	5	7	7	7	7	5	5	1	0
			Cycles / Day	0	0	1	1	1	1	1	1	1	1	1	0
	Max. Minutes / Cycle	31	Min. / Cycle	0	0	18	9	9	11	11	10	10	6	2	0
25	Turf Area, Baseball Field, High Water Use		Days / Week	0	0	2	5	7	7	7	7	5	5	1	0
			Cycles / Day	0	0	1	1	1	1	1	1	1	1	1	0
	Max. Minutes / Cycle	14	Min. / Cycle	0	0	7	6	7	8	8	7	8	4	2	0
26	Turf Area, Baseball Field, High Water Use		Days / Week	0	0	2	5	7	7	7	7	5	5	1	0
			Cycles / Day	0	0	1	1	1	1	1	1	1	1	1	0
	Max. Minutes / Cycle	29	Min. / Cycle	0	0	13	12	13	16	16	14	15	8	3	0
27	Turf Area, Baseball Field, High Water Use		Days / Week	0	0	2	5	7	7	7	7	5	5	1	0
			Cycles / Day	0	0	1	1	1	1	1	1	1	1	1	0
	Max. Minutes / Cycle	29	Min. / Cycle	0	0	13	12	13	16	16	14	15	9	3	0
28	Tree Area, Fire Lane, Medium Water Use		Days / Week	0	0	1	5	7	7	7	7	5	5	1	0
			Cycles / Day	0	0	2	1	1	1	1	1	1	1	1	0
	Max. Minutes / Cycle	8	Min. / Cycle	0	0	5	5	5	6	6	5	6	3	1	0
29	Turf Area, Baseball Field, High Water Use		Days / Week	0	0	2	5	7	7	7	7	5	5	1	0
			Cycles / Day	0	0	1	1	1	1	1	1	1	1	1	0
	Max. Minutes / Cycle	59	Min. / Cycle	0	0	27	25	26	32	32	28	30	17	5	0
30	Turf Area, Baseball Field, High Water Use		Days / Week	0	0	2	5	7	7	7	7	5	5	1	0
			Cycles / Day	0	0	1	1	1	1	1	1	1	1	1	0
	Max. Minutes / Cycle	58	Min. / Cycle	0	0	26	24	26	31	32	28	30	17	5	0
31	Existing Tree Area, Medium Water Use		Days / Week	0	0	1	5	7	7	7	7	5	5	1	0
			Cycles / Day	0	0	1	1	1	1	1	1	1	1	1	0
	Max. Minutes / Cycle	38	Min. / Cycle	0	0	20	10	10	12	12	11	12	7	2	0

Total Irrigation System Runtime (during establishment) Percentage adjustment: 150%

Maximum system runtime per irrigation day (single-station operation)	Hrs	0.0	0.0	5.0	3.7	3.8	4.6	4.7	4.1	4.4	2.5	0.9	0.0

Total Irrigation System Runtime (normal operation)

Maximum system runtime per irrigation day (single-station operation)	Hrs	0.0	0.0	3.4	2.4	2.6	3.1	3.1	2.7	2.9	1.7	0.6	0.0
NOTE: SPRAY IRRIGATION SHALL ONLY OPERATE BETWEEN THE HOURS OF 9PM-6AM.		0.0											

IRRIGATION SCHEDULE REFERENCE DATA

PROJECT INFORMATION	
PROJECT NAME	Lodi HS Baseball and Softball Field
LOCATION	Lodi, CA
NEAREST WEATHER STATION LOCATION	Lodi

SOIL SAMPLE SUMMARY	
SAMPLE DATE:	SAND
	SILT
	CLAY

	JAN	FEB	MAR	APR	MAY	JUN	JUL	AUG	SEP	OCT	NOV	DEC
Reference Eto (in./mo.)	0.79	1.55	3.28	5.17	6.58	7.51	7.87	6.85	5.11	3.29	1.54	0.76
Historical average precipitation	3.45	2.51	2.11	1.53	0.42	0.13	0.07	0.07	0.26	0.72	2.05	2.95
Effective precipitation (historical average -0.2" * 75%)	2.44	1.73	1.43	1.00	0.17	0.00	0.00	0.00	0.05	0.39	1.39	2.06
Base required irrigation (in./mo.)	0.00	0.00	1.85	4.17	6.42	7.51	7.87	6.85	5.07	2.90	0.15	0.00

HYDROZONE DATA

VALVE	DESCRIPTION (ORIENTATION, WATER USE)	KS	KD	KMC	KL	IRR TYPE	IE	PR	SOIL TYPE	BIR	AW	RZ	PAW	MAD	AD	AREA (SF)	% OF LANDSCAPE
1	Tree Area, South East, Medium Water Use	0.5	1.0	1.0	0.50	Bubbler	0.81	3.41	Silt	0.5	0.17	24	4.08	40%	1.632	75	0.05%
2	Turf Area, Softball Field, High Water Use	0.8	1.0	1.0	0.80	Overhead	0.75	1.91	Silt	0.5	0.17	4	0.68	40%	0.272	26067	16.06%
3	Turf Area, Softball Field, High Water Use	0.8	1.0	1.0	0.80	Overhead	0.75	0.96	Silt	0.5	0.17	4	0.68	40%	0.272	N/A	N/A
4	Turf Area, Softball Field, High Water Use	0.8	1.0	1.0	0.80	Overhead	0.75	0.58	Silt	0.5	0.17	4	0.68	40%	0.272	N/A	N/A
5	Turf Area, Softball Field, High Water Use	0.8	1.0	1.0	0.80	Overhead	0.75	0.85	Silt	0.5	0.17	4	0.68	40%	0.272	N/A	N/A
6	Biofiltration Sod, Softball Field, Low Water Use	0.2	1.0	1.0	0.20	MultiStrm	0.81	0.81	Silt	0.5	0.17	8	1.36	40%	0.544	1679	1.03%
7	Bio Retention Area, Fire Lane, Medium Water Use	0.5	1.3	1.0	0.65	Overhead	0.75	0.88	Silt	0.5	0.17	8	1.36	40%	0.544	5142	3.17%
8	Tree Area, Bio Retention Area, Medium Water Us	0.5	1.3	1.3	0.85	Bubbler	0.81	3.68	Silt	0.5	0.17	24	4.08	40%	1.632	200	0.12%
9	Turf Area, Baseball Field, High Water Use	0.8	1.0	1.0	0.80	Overhead	0.75	0.51	Silt	0.5	0.17	4	0.68	40%	0.272	78107	48.12%
10	Turf Area, Baseball Field, High Water Use	0.8	1.0	1.0	0.80	Overhead	0.75	0.54	Silt	0.5	0.17	4	0.68	40%	0.272	N/A	N/A
11	Turf Area, Baseball Field, High Water Use	0.8	1.0	1.0	0.80	Overhead	0.75	1.20	Silt	0.5	0.17	4	0.68	40%	0.272	N/A	N/A
12	Biofiltration Sod, Baseball Field, Low Water Use	0.2	1.0	1.0	0.20	MultiStrm	0.81	0.81	Silt	0.5	0.17	8	1.36	40%	0.544	2416	1.49%
13	Turf Area, Baseball Field, High Water Use	0.8	1.0	1.0	0.80	Overhead	0.75	1.20	Silt	0.5	0.17	4	0.68	40%	0.272	N/A	N/A
14	Turf Area, Baseball Field, High Water Use	0.8	1.0	1.0	0.80	Overhead	0.75	0.52	Silt	0.5	0.17	4	0.68	40%	0.272	N/A	N/A
15	Turf Area, Baseball Field, High Water Use	0.8	1.0	1.0	0.80	Overhead	0.75	0.53	Silt	0.5	0.17	4	0.68	40%	0.272	N/A	N/A
16	No Mow Area, South, Medium Water Use	0.8	1.0	1.0	0.80	Overhead	0.75	1.15	Silt	0.5	0.17	12	2.04	40%	0.816	12956	7.98%
17	No Mow Area, South, Medium Water Use	0.5	1.0	1.0	0.50	Overhead	0.75	0.95	Silt	0.5	0.17	12	2.04	40%	0.816	N/A	N/A
18	Tree Area, No Mow South, Medium Water Use	0.5	1.0	1.0	0.50	Bubbler	0.81	3.44	Silt	0.5	0.17	24	4.08	40%	1.632	175	0.11%
															Total Irrigated Area:	126817	78%

LEGEND: KS=SPECIES COEFFICENT, KD=DENSITY COEFFICENT, KMC-MICRO-CLIMATE COEFFICIENT, KL=LANDSCAPE COEFFCIENT, IE= IRRIGATION EFFICIENCY, PR = PRECIPITATION RATE, BIR = BASIC INTAKE RATE, AW = AVAILABLE WATER, RZ = ROOT ZONE, PAW = PLANT AVAILABLE WATER, MAD = MANAGED ALLOWABLE DEPLETION (%), AD = ALLOWABLE DEPLETION (INCHES).

WATERING SCHEDULE

Zone	Description			Jan	Feb	Mar	Apr	May	Jun	Jul	Aug	Sep	Oct	Nov	Dec
1	Tree Area, South East, Medium Water Use		Days / Week	0	0	1	5	7	7	7	7	5	5	1	0
			Cycles / Day	0	0	1	1	1	1	1	1	1	1	1	0
	Max. Minutes / Cycle	9	Min. / Cycle	0	0	5	3	3	3	3	3	3	2	1	0
2	Turf Area, Softball Field, High Water Use		Days / Week	0	0	2	5	7	7	7	7	5	5	1	0
			Cycles / Day	0	0	1	1	1	1	1	1	1	1	1	0
	Max. Minutes / Cycle	16	Min. / Cycle	0	0	7	7	7	9	9	8	8	5	2	0
3	Turf Area, Softball Field, High Water Use		Days / Week	0	0	2	5	7	7	7	7	5	5	1	0
			Cycles / Day	0	0	1	1	1	1	1	1	1	1	1	0
	Max. Minutes / Cycle	31	Min. / Cycle	0	0	14	13	14	17	17	15	16	9	3	0
4	Turf Area, Softball Field, High Water Use		Irr. Days / Wk	0	0	2	5	7	7	7	7	5	5	1	0
			Cycles / Day	0	0	1	1	1	1	1	1	1	1	1	0
	Max. Minutes / Cycle	52	Min. / Cycle	0	0	24	22	23	28	29	25	27	15	4	0
5	Turf Area, Softball Field, High Water Use		Days / Week	0	0	2	5	7	7	7	7	5	5	1	0
			Cycles / Day	0	0	1	1	1	1	1	1	1	1	1	0
	Max. Minutes / Cycle	35	Min. / Cycle	0	0	16	15	16	19	20	17	18	10	3	0
6	Biofiltration Sod, Softball Field, Low Water Use		Days / Week	0	0	1	5	7	7	7	7	5	5	1	0
			Cycles / Day	0	0	1	1	1	1	1	1	1	1	1	0
	Max. Minutes / Cycle	37	Min. / Cycle	0	0	8	4	4	5	5	5	5	3	1	0
7	Bio Retention Area, Fire Lane, Medium Water Use		Days / Week	0	0	1	5	7	7	7	7	5	5	1	0
			Cycles / Day	0	0	1	1	1	1	1	1	1	1	1	0
	Max. Minutes / Cycle	34	Min. / Cycle	0	0	25	12	13	15	16	14	14	8	3	0
8	Tree Area, Bio Retention Area, Medium Water Us		Days / Week	0	0	1	5	7	7	7	7	5	5	1	0
			Cycles / Day	0	0	1	1	1	1	1	1	1	1	1	0
	Max. Minutes / Cycle	8	Min. / Cycle	0	0	8	4	4	5	5	4	5	3	1	0
9	Turf Area, Baseball Field, High Water Use		Days / Week	0	0	2	5	7	7	7	7	5	5	1	0
			Cycles / Day	0	0	1	1	1	1	1	1	1	1	1	0
	Max. Minutes / Cycle	59	Min. / Cycle	0	0	27	25	26	32	32	28	30	17	5	0
10	Turf Area, Baseball Field, High Water Use		Irr. Days / Wk	0	0	2	5	7	7	7	7	5	5	1	0
			Cycles / Day	0	0	1	1	1	1	1	1	1	1	1	0
	Max. Minutes / Cycle	56	Min. / Cycle	0	0	25	24	25	30	31	27	29	16	5	0
11	Turf Area, Baseball Field, High Water Use		Days / Week	0	0	2	5	7	7	7	7	5	5	1	0
			Cycles / Day	0	0	1	1	1	1	1	1	1	1	1	0
	Max. Minutes / Cycle	25	Min. / Cycle	0	0	12	11	12	14	14	12	13	7	2	0
12	Biofiltration Sod, Baseball Field, Low Water Use		Days / Week	0	0	1	5	7	7	7	7	5	5	1	0
			Cycles / Day	0	0	1	1	1	1	1	1	1	1	1	0
	Max. Minutes / Cycle	37	Min. / Cycle	0	0	8	4	4	5	5	5	5	3	1	0
13	Turf Area, Baseball Field, High Water Use		Days / Week	0	0	2	5	7	7	7	7	5	5	1	0
			Cycles / Day	0	0	1	1	1	1	1	1	1	1	1	0
	Max. Minutes / Cycle	25	Min. / Cycle	0	0	12	11	12	14	14	12	13	7	2	0
14	Turf Area, Baseball Field, High Water Use		Days / Week	0	0	2	5	7	7	7	7	5	5	1	0
			Cycles / Day	0	0	1	1	1	1	1	1	1	1	1	0
	Max. Minutes / Cycle	58	Min. / Cycle	0	0	26	24	26	31	32	28	30	17	5	0
15	Turf Area, Baseball Field, High Water Use		Days / Week	0	0	2	5	7	7	7	7	5	5	1	0
			Cycles / Day	0	0	1	1	1	2	2	1	1	1	1	0
	Max. Minutes / Cycle	30	Min. / Cycle	0	0	26	24	25	16	16	27	29	16	5	0
16	No Mow Area, South, Medium Water Use		Days / Week	0	0	1	5	7	7	7	7	5	5	1	0
			Cycles / Day	0	0	1	1	1	1	1	1	1	1	1	0
	Max. Minutes / Cycle	26	Min. / Cycle	0	0	24	11	12	14	15	13	14	8	2	0
17	No Mow Area, South, Medium Water Use		Irr. Days / Wk	0	0	1	5	7	7	7	7	5	5	1	0
			Cycles / Day	0	0	1	1	1	1	1	1	1	1	1	0
	Max. Minutes / Cycle	32	Min. / Cycle	0	0	18	9	9	11	11	10	10	6	2	0
18	Tree Area, No Mow South, Medium Water Use		Days / Week	0	0	1	5	7	7	7	7	5	5	1	0
			Cycles / Day	0	0	1	1	1	1	1	1	1	1	1	0
	Max. Minutes / Cycle	9	Min. / Cycle	0	0	5	3	3	3	3	3	3	2	1	0

Total Irrigation System Runtime (during establishment) Percentage adjustment: 150%

Maximum system runtime per irrigation day (single-station operation)	Hrs	0.0	0.0	7.3	5.7	6.0	7.2	7.3	6.4	6.8	3.9	1.2	0.0

Total Irrigation System Runtime (normal operation)

Maximum system runtime per irrigation day (single-station operation)	Hrs	0.0	0.0	4.8	3.8	4.0	4.8	4.9	4.3	4.5	2.6	0.8	0.0

NOTE:
SPRAY IRRIGATION SHALL ONLY OPERATE BETWEEN THE HOURS OF 9PM-6AM.

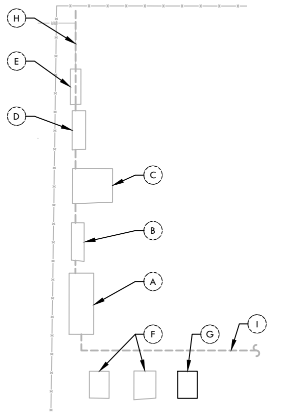

POINT OF CONNECTION LEGEND

- (A) EXISTING BACKFLOW PREVENTER
- (B) EXISTING 4" FILTER
- (C) EXISTING BOOSTER PUMP
- (D) EXISTING 3" IRRIGATION MASTER VALVE
- (E) EXISTING 3" FLOW SENSOR
- (F) EXISTING IRRIGATION CONTROLLER
- (G) PROPOSED IRRIGATION CONTROLLER, SEE DETAIL M, SHEET D5.1
- (H) EXISTING 4" IRRIGATION MAIN LINE TO VALVES
- (I) 4" WATER LINE

NOTE:
1. MEASUREMENTS ARE SHOWN FOR REFERENCE ONLY. CONTRACTOR SHALL DETERMINE FINAL LAYOUT OF EQUIPMENT PER CITY STANDARDS AND PROVIDE APPROPRIATE CLEARANCE AREA PER THE RECOMMENDED DIMENSIONS FROM THE MANUFACTURER.

A IRRIGATION EQUIPMENT LAYOUT

IDENTIFICATION STAMP
DIV. OF THE STATE ARCHITECT
APP: 02-123587 INC:
REVIEWED FOR
SS ☑ FLS ☑ ACS ☑
DATE: 01/16/2026

VERDE DESIGN
LANDSCAPE ARCHITECTURE
CIVIL ENGINEERING
SPORT PLANNING & DESIGN
1843 Iron Point Rd. Suite 140
Folsom, CA 95630
tel: 916.415.6554
fax: 916.415.6525
www.VerdeDesignInc.com

STAMP

MARK S. BAGINSKI
No. 4089
EXPIRATION DATE: JULY 2027

CONSULTANT

KEYMAP

SHEET TITLE
IRRIGATON
SUPPLEMENTAL
INFORMATION

PROJECT NAME
LODI HIGH SCHOOL
ATHLETIC FIELD
IMPROVEMENTS

PROJECT ADDRESS
3 S PACIFIC AVE
LODI, CA
95242

SUBMITTAL	DATE
50% DSA SUBMITTAL	07/31/25
100% DSA SUBMITTAL	09/25/25
DSA BACKCHECK SUBMITTAL	12/17/25
DSA BACKCHECK SUBMITTAL	01/08/26

NO.	REVISIONS	DATE
△		
△		
△		
△		
△		
△		

DRAWN BY AW	CHECKED BY CS/MB
DATE ISSUED 01/08/2026	SCALE N/A
PROJ. NO. 2502700	
SHEET NO. L8.3	

IRRIGATION SUPPLEMENTAL INFORMATION

ALL IDEAS, DESIGNS, ARRANGEMENTS, AND PLANS INDICATED OR REPRESENTED BY THIS DRAWING ARE OWNED BY AND THE PROPERTY OF VERDE DESIGN, INC. AND WERE CREATED, EVOLVED, AND DEVELOPED FOR USE ON AND IN CONNECTION WITH THE SPECIFIED PROJECT. NONE OF SUCH IDEAS, DESIGNS, ARRANGEMENTS OR PLANS SHALL BE USED, REPRODUCED, OR DISCLOSED TO ANY PERSON, FIRM, OR CORPORATION FOR ANY PURPOSE WHATSOEVER WITHOUT WRITTEN PERMISSION OF VERDE DESIGN, INC.

DRAWING NAME: Y:\Projects-FD\2025\2502700 - Lodi HS Baseball and Softball Field\CAD\L_IRR.dwg
PLOT DATE: 12-11-25 PLOTTED BY: station45

ALL IDEAS, DESIGNS, ARRANGEMENTS, AND PLANS INDICATED OR REPRESENTED BY THIS DRAWING ARE OWNED BY AND THE PROPERTY OF VERDE DESIGN, INC. AND WERE CREATED, EVOLVED, AND DEVELOPED FOR USE ON AND IN CONNECTION WITH THE SPECIFIED PROJECT. NONE OF SUCH IDEAS, DESIGNS, ARRANGEMENTS OR PLANS SHALL BE USED, REPRODUCED, OR PUBLISHED BY ANY METHOD, IN WHOLE OR IN PART, OR DISCLOSED TO ANY PERSON, FIRM, OR CORPORATION FOR ANY PURPOSE WHATSOEVER WITHOUT WRITTEN PERMISSION OF VERDE DESIGN, INC.

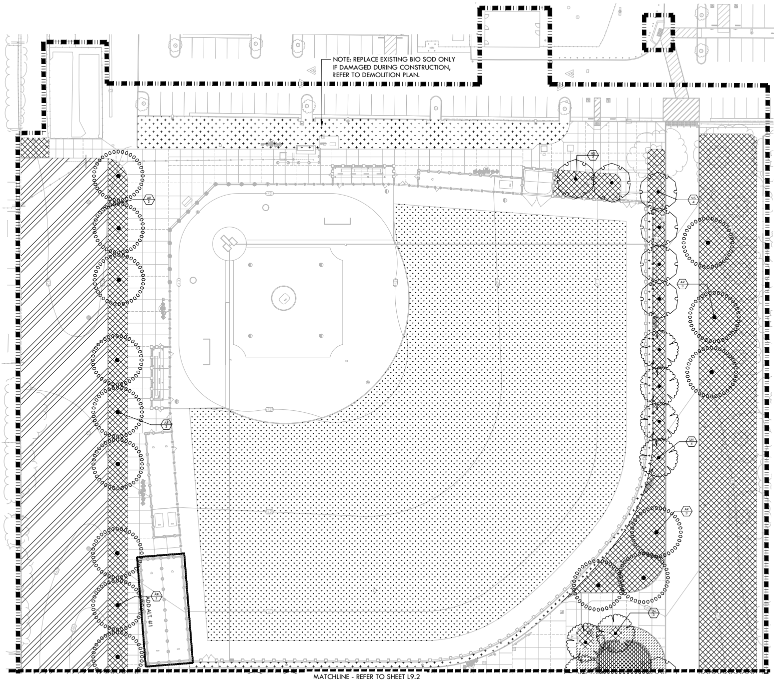

NOTE: REPLACE EXISTING BIO SOD ONLY
IF DAMAGED DURING CONSTRUCTION,
REFER TO DEMOLITION PLAN.

MATCHLINE - REFER TO SHEET L9.2

NORTH
0'
10'
20'
40'
60'

PLANTING NOTES

1. PLANT COUNTS SHOWN ARE FOR BIDDING REFERENCE ONLY. CONTRACTOR SHALL SUPPLY ALL PLANTS REQUIRED TO FULFILL DESIGN INTENT AS SHOWN.
2. CONTRACTOR SHALL PROTECT AND MAINTAIN ALL PLANT MATERIAL FROM TIME OF DELIVERY TO TIME OF FINAL ACCEPTANCE. OWNER SHALL NOT BE RESPONSIBLE FOR LOSSES DUE TO VANDALISM, THEFT OR SEVERE WEATHER.
3. CONTRACTOR SHALL PLACE PLANT MATERIALS SO THEY DO NOT INTERFERE WITH IRRIGATION SYSTEM OR INHIBIT REQUIRED COVERAGE. PLANT LOCATIONS MAY BE ADJUSTED AS LONG AS DESIGN INTENT IS NOT COMPROMISED. CONTRACTOR SHALL SET OUT PLANT MATERIAL AS PER PLAN AND RECEIVE ACCEPTANCE FROM OWNER'S REPRESENTATIVE WITH RESPECT TO PLANT HEALTH AND LOCATION PRIOR TO INSTALLATION. CONTRACTOR SHALL GIVE MINIMUM 2 WORKING DAYS NOTICE FOR OBSERVATION AND SHALL HAVE ALL PLANT MATERIAL IN SPECIFIED LOCATIONS FOR REVIEW AT ONE TIME. CONTRACTOR SHALL REPLACE ANY MATERIAL AS REQUESTED BY OWNER'S REPRERESENTATIVE.
4. ALL NON-TURF PLANTING AREAS SHALL RECEIVE A 3" LAYER OF BARK MULCH TOP DRESS (UNLESS NOTED OTHERWISE). REFER TO SPECIFICATIONS.
5. WHEN WORK HAS TO OCCUR UNDER THE DRIPLINE OF EXISTING TREES NOT SCHEDULED FOR REMOVAL, THE CONTRACTOR SHALL USE ALL POSSIBLE CARE TO AVOID INJURY TO THE TREES AND TREE ROOTS. GRADE IN LINES RADIAL TO THE EXISTING TREES RATHER THAN TANGENTIAL. ALL PARTIAL CUTS OR TEARS THROUGH ROOTS TWO INCHES IN DIAMETER AND LARGER SHALL BE CUT CLEAN. TRENCHES ADJACENT TO TREES SHALL BE FILLED WITHIN 24 HOURS AFTER EXCAVATION, BUT WHERE THIS IS NOT POSSIBLE, THE SIDE OF THE TRENCH ADJACENT TO THE TREE, AND ANY EXPOSED ROOTS SHALL BE KEPT SHADED AND MOIST WITH DAMPENED BURLAP OR CANVAS.
5. ALL TURF, MULCH, AND PLANTERS TO RECEIVE SOIL AMENDMENTS AND SOIL PREPARATION PER SPECIFICATIONS UNLESS OTHERWISE NOTED.
7. THE WUCOLS CLASSIFICATION FOR THIS LOCATION IS REGION 2 - CENTRAL VALLEY.

PLANTING LEGEND

SYM	QTY	SIZE	BOTANICAL/COMMON NAME	WUCOLS	SPACING/ COMMENTS	DTL REF
TREES						
AR	21	15 GAL	ACER RUBRUM 'OCTOBER GLORY' OCTOBER GLORY RED MAPLE	MEDIUM	PER PLAN	H D5.1
LN	7	15 GAL	LAURUS NOBILIS SWEET BAY LAUREL	LOW	PER PLAN	
NS	15	15 GAL	NYSSA SYLVATICA TUPELO	MEDIUM	PER PLAN	
BIORETENTION AREA						
▨	347	1 GAL	JUNCUS PATENS CALIFORNIA GRAY RUSH	MEDIUM	24" O.C.	? D5.1
▨	3,359	1 GAL	CAREX PRAEGRACILIS CLUSTERED FIELD SEDGE	MEDIUM	18" O.C.	
MISCELLANEOUS						
▨	TAHOMA 31 SOD BERMUDA - REFER TO SPECIFICATIONS					
▨	TAHOMA 31 HYDROSEED - REFER TO SPECIFICATIONS					
▨	BIOFILTRATION SOD FROM DELTA BLUEGRASS CO. - REFER TO SPECIFICATIONS					
▨	MULCH - REFER TO SPECIFICATIONS					
▨	REDWOOD HEADER BOARD					Q D5.1
▨	LIMIT OF WORK					

PLANT SYMBOL — LJ
PLANT QUANTITY — 10

IDENTIFICATION STAMP
DIV. OF THE STATE ARCHITECT
APP: 02-123587 INC:
REVIEWED FOR
SS ☑ FLS ☑ ACS ☑
DATE: 01/16/2026

VERDE DESIGN
LANDSCAPE ARCHITECTURE
CIVIL ENGINEERING
SPORT PLANNING & DESIGN
1843 Iron Point Rd. Suite 140
Folsom, CA 95630
tel: 916.418.6854
fax: 916.418.6836
www.VerdeDesignInc.com

STAMP

REGISTERED LANDSCAPE ARCHITECT
MARK S. BAGINSKI
No. 4089
EXPIRATION DATE: JULY 2027
STATE OF CALIFORNIA

CONSULTANT

KEYMAP

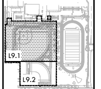

SHEET TITLE
PLANTING
PLAN -
BASEBALL FIELD

PROJECT NAME
LODI HIGH SCHOOL
ATHLETIC FIELD
IMPROVEMENTS

PROJECT ADDRESS
3 S PACIFIC AVE
LODI, CA
95242

SUBMITTAL	DATE
50% DSA SUBMITTAL	07/31/25
100% DSA SUBMITTAL	09/25/25
DSA BACKCHECK SUBMITTAL	12/17/25
DSA BACKCHECK SUBMITTAL	01/08/26

NO.	REVISIONS	DATE
△		
△		
△		
△		
△		
△		

DRAWN BY AL	CHECKED BY CS/MB
DATE ISSUED 01/08/2026	SCALE 1"=20'-0"
PROJ. NO. 2502700	
SHEET NO. L9.1	

PLANTING PLAN - BASEBALL FIELD

DRAWING NAME: Y:\Projects-FO\2025\2502700 - Lodi HS Baseball and Softball Field\CAD_PLT.dwg
PLOT DATE: 12-12-25 PLOTTED BY: station23

HARDSCAPE SHADE CALCULATION

HARDSCAPE SHADE CALCULATION

40' Diamater Tree	Shade Percentage	Quantity	Total Shade (sf)
Tree Symbol	100% (1,257 sf/tree)	0	-
	75% (943 sf/tree)	1	530
	50% (629 sf/tree)	12	4,248
	25% (314 sf/tree)	4	708
		Sum	5,486

30' Diamater Tree	Shade Percentage	Quantity	Total Shade (sf)
Tree Symbol	100% (706 sf/tree)	0	-
	75% (530 sf/tree)	0	-
	50% (354 sf/tree)	13	4,602
	25% (177 sf/tree)	11	1,947
		Sum	6,549

Total Shade Provided 12,035

New Hardscape(sf)	Shade Required - 20% (sf)	Shade Provided (sf)	Percent Shade
57,503	11,501	12,035	21%

LANDSCAPE SHADE CALCULATION

LANDSCAPE SHADE CALCULATION

40' Diamater Tree	Shade Percentage	Quantity	Total Shade (sf)
Tree Symbol	100% (1,257 sf/tree)	5	3,530
	75% (943 sf/tree)	4	2,120
	50% (629 sf/tree)	12	4,248
	25% (314 sf/tree)	1	177
		Sum	10,075

30' Diamater Tree	Shade Percentage	Quantity	Total Shade (sf)
Tree Symbol	100% (706 sf/tree)	1	706
	75% (530 sf/tree)	11	5,830
	50% (354 sf/tree)	13	4,602
	25% (177 sf/tree)	0	-
		Sum	11,138

Total Shade Provided 21,213

New Landscape(sf)	Shade Required - 20% (sf)	Shade Provided (sf)	Percent Shade
90,393	18,079	21,213	23%

Note: Designated and marked play areas of organized sport activity are not included in the total area calculation per 5.106.12.3

PLANTING NOTES

1. PLANT COUNTS SHOWN ARE FOR BIDDING REFERENCE ONLY. CONTRACTOR SHALL SUPPLY ALL PLANTS REQUIRED TO FULFILL DESIGN INTENT AS SHOWN.
2. CONTRACTOR SHALL PROTECT AND MAINTAIN ALL PLANT MATERIAL FROM TIME OF DELIVERY TO TIME OF FINAL ACCEPTANCE. OWNER SHALL NOT BE RESPONSIBLE FOR LOSSES DUE TO VANDALISM, THEFT OR SEVERE WEATHER.
3. CONTRACTOR SHALL PLACE PLANT MATERIALS SO THEY DO NOT INTERFERE WITH IRRIGATION SYSTEM OR INHIBIT REQUIRED COVERAGE. PLANT LOCATIONS MAY BE ADJUSTED AS LONG AS DESIGN INTENT IS NOT COMPROMISED. CONTRACTOR SHALL SET OUT PLANT MATERIAL AS PER PLAN AND RECEIVE ACCEPTANCE FROM OWNER'S REPRESENTATIVE WITH RESPECT TO PLANT HEALTH AND LOCATION PRIOR TO INSTALLATION. CONTRACTOR SHALL GIVE MINIMUM 2 WORKING DAYS NOTICE FOR OBSERVATION AND SHALL HAVE ALL PLANT MATERIAL IN SPECIFIED LOCATIONS FOR REVIEW AT ONE TIME. CONTRACTOR SHALL REPLACE ANY MATERIAL AS REQUESTED BY OWNER'S REPRERESENTATIVE.
4. ALL NON-TURF PLANTING AREAS SHALL RECEIVE A 3" LAYER OF BARK MULCH TOP DRESS (UNLESS NOTED OTHERWISE). REFER TO SPECIFICATIONS.
5. WHEN WORK HAS TO OCCUR UNDER THE DRIPLINE OF EXISTING TREES NOT SCHEDULED FOR REMOVAL, THE CONTRACTOR SHALL USE ALL POSSIBLE CARE TO AVOID INJURY TO THE TREES AND TREE ROOTS. GRADE IN LINES RADIAL TO THE EXISTING TREES RATHER THAN TANGENTIAL. ALL PARTIAL CUTS OR TEARS THROUGH ROOTS TWO INCHES IN DIAMETER AND LARGER SHALL BE CUT CLEAN. TRENCHES ADJACENT TO TREES SHALL BE FILLED WITHIN 24 HOURS AFTER EXCAVATION, BUT WHERE THIS IS NOT POSSIBLE, THE SIDE OF THE TRENCH ADJACENT TO THE TREE, AND ANY EXPOSED ROOTS SHALL BE KEPT SHADED AND MOIST WITH DAMPENED BURLAP OR CANVAS.
5. ALL TURF, MULCH, AND PLANTERS TO RECEIVE SOIL AMENDMENTS AND SOIL PREPARATION PER SPECIFICATIONS UNLESS OTHERWISE NOTED.
7. THE WUCOLS CLASSIFICATION FOR THIS LOCATION IS REGION 2 - CENTRAL VALLEY.

PLANTING LEGEND

SYM	QTY	SIZE	BOTANICAL/COMMON NAME	WUCOLS	SPACING/ COMMENTS	DTL REF
TREES						
⊙ AR	21	15 GAL	ACER RUBRUM 'OCTOBER GLORY' OCTOBER GLORY RED MAPLE	MEDIUM	PER PLAN	H DS.1
⊙ LN	7	15 GAL	LAURUS NOBILIS SWEET BAY LAUREL	LOW	PER PLAN	
⊙ NS	15	15 GAL	NYSSA SYLVATICA TUPELO	MEDIUM	PER PLAN	
BIORETENTION AREA						
▩	347	1 GAL	JUNCUS PATENS CALIFORNIA GRAY RUSH	MEDIUM	24" O.C.	? DS.1
▨	3,359	1 GAL	CAREX PRAEGRACILIS CLUSTERED FIELD SEDGE	MEDIUM	18" O.C.	
MISCELLANEOUS						
⁘			TAHOMA 31 SOD BERMUDA - REFER TO SPECIFICATIONS			
▨			TAHOMA 31 HYDROSEED - REFER TO SPECIFICATIONS			
✚			BIOFILTRATION SOD FROM DELTA BLUEGRASS CO. - REFER TO SPECIFICATIONS			
▦			MULCH - REFER TO SPECIFICATIONS			
╱			REDWOOD HEADER BOARD			Q DS.1
▬			LIMIT OF WORK			

PLANT SYMBOL — LJ
PLANT QUANTITY — 10

MATCHLINE - REFER TO SHEET L9.1

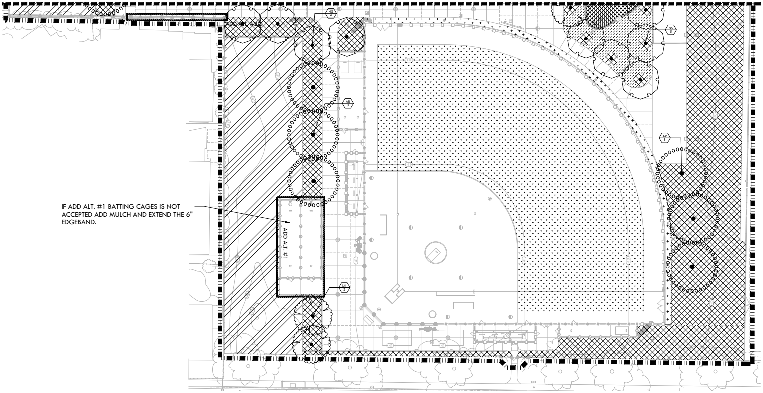

IF ADD ALT. #1 BATTING CAGES IS NOT ACCEPTED ADD MULCH AND EXTEND THE 6" EDGEBAND.

NORTH
0'
10'
20'
40'
60'

IDENTIFICATION STAMP
DIV. OF THE STATE ARCHITECT
APP: 02-123587 INC:
REVIEWED FOR
SS ☑ FLS ☑ ACS ☑
DATE: 01/16/2026

VERDE DESIGN
LANDSCAPE ARCHITECTURE
CIVIL ENGINEERING
SPORT PLANNING & DESIGN
1843 Iron Point Rd. Suite 140
Folsom, CA 95630
tel [illegible]
fax [illegible]
www.VerdeDesignInc.com

STAMP

REGISTERED LANDSCAPE ARCHITECT
MARK S. BAGINSKI
No. 4089
Signature
EXPIRATION DATE: JULY 2027
STATE OF CALIFORNIA

CONSULTANT

KEYMAP

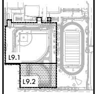

SHEET TITLE
PLANTING
PLAN -
SOFTBALL FIELD

PROJECT NAME
LODI HIGH SCHOOL
ATHLETIC FIELD
IMPROVEMENTS

PROJECT ADDRESS
3 S PACIFIC AVE
LODI, CA
95242

SUBMITTAL	DATE
50% DSA SUBMITTAL	07/31/25
100% DSA SUBMITTAL	09/25/25
DSA BACKCHECK SUBMITTAL	12/17/25
DSA BACKCHECK SUBMITTAL	01/08/26

NO.	REVISIONS	DATE
△		
△		
△		
△		
△		
△		

DRAWN BY: AL
CHECKED BY: CS/MB
DATE ISSUED: 01/08/2026
SCALE: 1"=20'-0"
PROJ. NO.: 2502700
SHEET NO.: L9.2

PLANTING PLAN - SOFTBALL FIELD

ALL IDEAS, DESIGNS, ARRANGEMENTS, AND PLANS INDICATED OR REPRESENTED BY THIS DRAWING ARE OWNED BY AND THE PROPERTY OF VERDE DESIGN, INC. AND WERE CREATED, EVOLVED, AND DEVELOPED FOR USE ON AND IN CONNECTION WITH THE SPECIFIED PROJECT. NONE OF SUCH IDEAS, DESIGNS, ARRANGEMENTS OR PLANS SHALL BE USED, REPRODUCED, OR PUBLISHED BY ANY METHOD, IN WHOLE OR IN PART, OR DISCLOSED TO ANY PERSON, FIRM, OR CORPORATION FOR ANY PURPOSE WHATSOEVER WITHOUT WRITTEN PERMISSION OF VERDE DESIGN, INC.

DRAWING NAME: Y:\Projects-FO\2025\2502700 - Lodi HS Baseball and Softball Field\CAD_PLT.dwg
PLOT DATE: 12-12-25 PLOTTED BY: station23

R DRAINAGE BUBBLER AT BIORETENTION AREA NTS

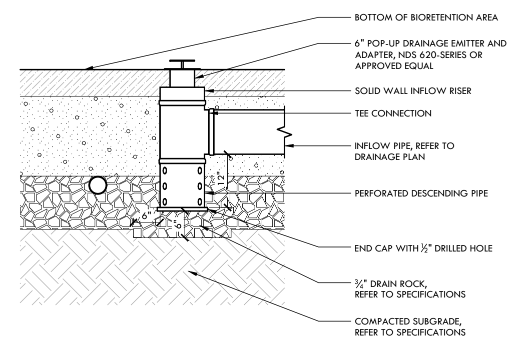
BOTTOM OF BIORETENTION AREA
6" POP-UP DRAINAGE EMITTER AND ADAPTER, NDS 620-SERIES OR APPROVED EQUAL
SOLID WALL INFLOW RISER
TEE CONNECTION
INFLOW PIPE, REFER TO DRAINAGE PLAN
PERFORATED DESCENDING PIPE
END CAP WITH ½" DRILLED HOLE
¾" DRAIN ROCK, REFER TO SPECIFICATIONS
COMPACTED SUBGRADE, REFER TO SPECIFICATIONS
12"
6"
6"

Q FRENCH DRAIN IN SOFTSCAPE NTS

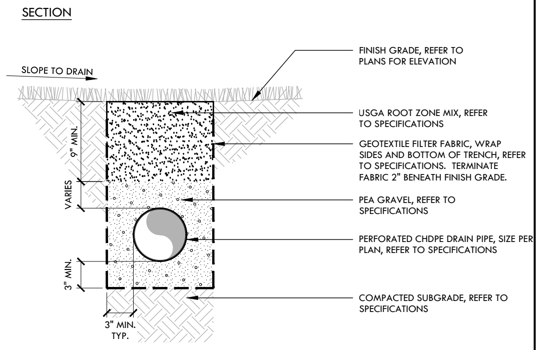
SECTION
SLOPE TO DRAIN
FINISH GRADE, REFER TO PLANS FOR ELEVATION
USGA ROOT ZONE MIX, REFER TO SPECIFICATIONS
GEOTEXTILE FILTER FABRIC, WRAP SIDES AND BOTTOM OF TRENCH, REFER TO SPECIFICATIONS. TERMINATE FABRIC 2" BENEATH FINISH GRADE.
PEA GRAVEL, REFER TO SPECIFICATIONS
PERFORATED CHDPE DRAIN PIPE, SIZE PER PLAN, REFER TO SPECIFICATIONS
COMPACTED SUBGRADE, REFER TO SPECIFICATIONS
9" MIN.
VARIES
3" MIN.
3" MIN. TYP.

P EARTHEN SWALE NTS

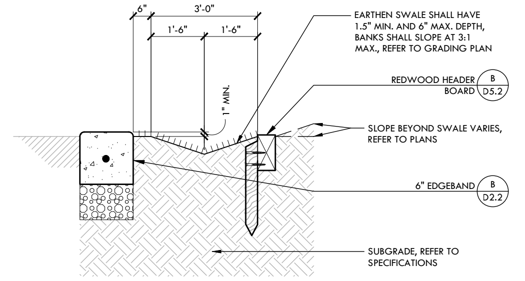
6"
3'-0"
1'-6"
1'-6"
1" MIN.
EARTHEN SWALE SHALL HAVE 1.5" MIN. AND 6" MAX. DEPTH, BANKS SHALL SLOPE AT 3:1 MAX., REFER TO GRADING PLAN
REDWOOD HEADER BOARD B D5.2
SLOPE BEYOND SWALE VARIES, REFER TO PLANS
6" EDGEBAND B D2.2
SUBGRADE, REFER TO SPECIFICATIONS

O AREA DRAIN NTS

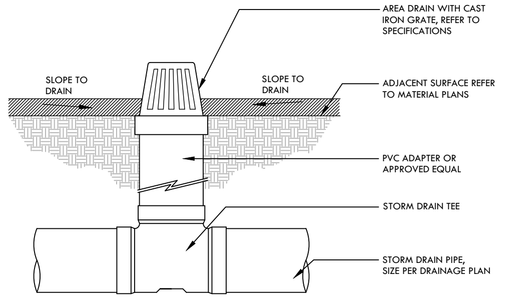
AREA DRAIN WITH CAST IRON GRATE, REFER TO SPECIFICATIONS
SLOPE TO DRAIN
SLOPE TO DRAIN
ADJACENT SURFACE REFER TO MATERIAL PLANS
PVC ADAPTER OR APPROVED EQUAL
STORM DRAIN TEE
STORM DRAIN PIPE, SIZE PER DRAINAGE PLAN

NOTE: CONTRACTOR TO PROVIDE NECESSARY PIPE REDUCER IF REQUIRED DUE TO STORM LINE SIZES INDICATED ON DRAINAGE PLAN.

N OVERFLOW RISER WITH GRATE/ STANDPIPE NTS

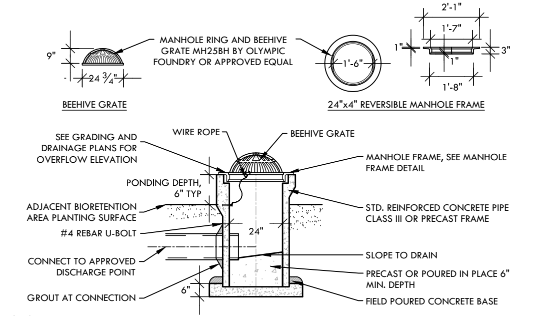
9"
24 ¾"
MANHOLE RING AND BEEHIVE GRATE MH25BH BY OLYMPIC FOUNDRY OR APPROVED EQUAL
1'-6"
2'-1"
1'-7"
1"
1"
3"
1'-8"
BEEHIVE GRATE
24"x4" REVERSIBLE MANHOLE FRAME
SEE GRADING AND DRAINAGE PLANS FOR OVERFLOW ELEVATION
WIRE ROPE
BEEHIVE GRATE
MANHOLE FRAME, SEE MANHOLE FRAME DETAIL
PONDING DEPTH, 6" TYP
ADJACENT BIORETENTION AREA PLANTING SURFACE
STD. REINFORCED CONCRETE PIPE CLASS III OR PRECAST FRAME
#4 REBAR U-BOLT
24"
CONNECT TO APPROVED DISCHARGE POINT
SLOPE TO DRAIN
PRECAST OR POURED IN PLACE 6" MIN. DEPTH
GROUT AT CONNECTION
6"
FIELD POURED CONCRETE BASE

NOTES

1. ALL PIPING ENTRIES AND EXITS INTO DRAINAGE STRUCTURES SHALL BE GROUTED SMOOTH AND WATERTIGHT USING NON-SHRINK GROUT, TYP.
2. ALL RISERS AND EXTENSIONS SHALL BE CONNECTED WITH AN ADHESIVE PRODUCT (RAMNEK OR EQUIVALENT)
3. ALL GRATES SHALL BE FITTED WITH LOCK-DOWN MECHANISMS OR BOLT-DOWN COVERS.

M BIORETENTION AREA NTS

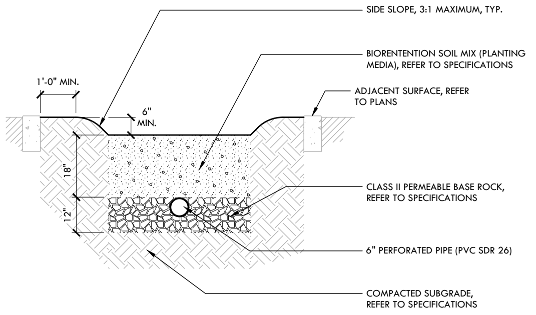
SIDE SLOPE, 3:1 MAXIMUM, TYP.
BIORENTENTION SOIL MIX (PLANTING MEDIA), REFER TO SPECIFICATIONS
1'-0" MIN.
6" MIN.
ADJACENT SURFACE, REFER TO PLANS
18"
12"
CLASS II PERMEABLE BASE ROCK, REFER TO SPECIFICATIONS
6" PERFORATED PIPE (PVC SDR 26)
COMPACTED SUBGRADE, REFER TO SPECIFICATIONS

L COBBLE ENERGY DISSIPATOR NTS

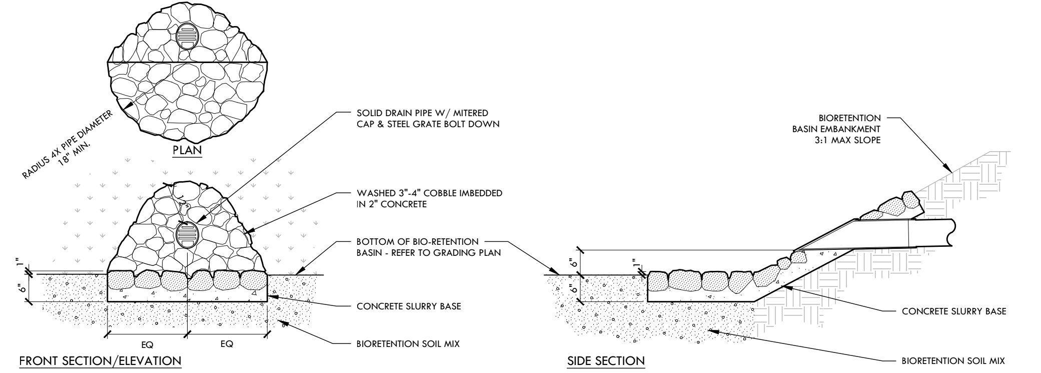
RADIUS 4X PIPE DIAMETER 18" MIN.
SOLID DRAIN PIPE W/ MITERED CAP & STEEL GRATE BOLT DOWN
WASHED 3"-4" COBBLE IMBEDDED IN 2" CONCRETE
BOTTOM OF BIO-RETENTION BASIN - REFER TO GRADING PLAN
CONCRETE SLURRY BASE
BIORETENTION SOIL MIX
1"
6"
EQ
EQ
BIORETENTION BASIN EMBANKMENT 3:1 MAX SLOPE
6"
1"
6"
CONCRETE SLURRY BASE
BIORETENTION SOIL MIX

PLAN

FRONT SECTION/ELEVATION

SIDE SECTION

K INFILTRATION TRENCH AT BIORETENTION AREA NTS

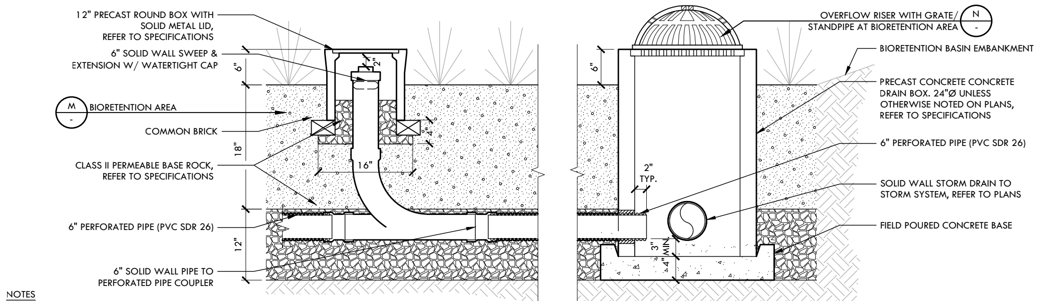
12" PRECAST ROUND BOX WITH SOLID METAL LID, REFER TO SPECIFICATIONS
6" SOLID WALL SWEEP & EXTENSION W/ WATERTIGHT CAP
M - BIORETENTION AREA
COMMON BRICK
CLASS II PERMEABLE BASE ROCK, REFER TO SPECIFICATIONS
6" PERFORATED PIPE (PVC SDR 26)
6" SOLID WALL PIPE TO PERFORATED PIPE COUPLER
6"
2"
4"
18"
16"
12"
OVERFLOW RISER WITH GRATE/ STANDPIPE AT BIORETENTION AREA N -
BIORETENTION BASIN EMBANKMENT
PRECAST CONCRETE CONCRETE DRAIN BOX. 24"Ø UNLESS OTHERWISE NOTED ON PLANS, REFER TO SPECIFICATIONS
6" PERFORATED PIPE (PVC SDR 26)
SOLID WALL STORM DRAIN TO STORM SYSTEM, REFER TO PLANS
FIELD POURED CONCRETE BASE
COMPACTED SUBGRADE, REFER TO SPECIFICATIONS
6"
2" TYP.
3" MIN.
4"

NOTES

1. VERIFY EXACT LOCATION AND RIM PRIOR TO INSTALLATION.
2. ALL PIPING ENTRIES AND EXITS INTO DRAINAGE STRUCTURES SHALL BE GROUTED SMOOTH AND WATERTIGHT USING NON-SHRINK GROUT, TYP.
3. CONCRETE BOX RISERS AND EXTENSIONS SHALL BE CONNECTED WITH AN ADHESIVE PRODUCT (RAMNEK OR EQUIVALENT).
4. ALL LIDS/GRATES SHALL BE FITTED WITH BOLT OR LOCK-DOWN MECHANISMS.

J TRENCH DRAIN NTS

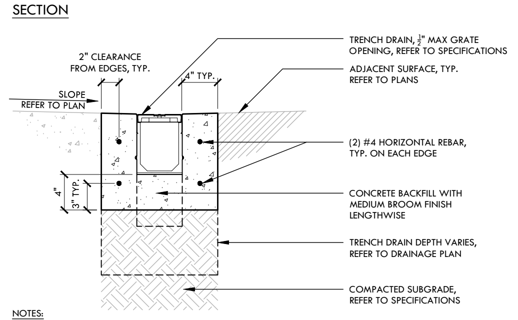
SECTION
2" CLEARANCE FROM EDGES, TYP.
4" TYP.
SLOPE REFER TO PLAN
TRENCH DRAIN, ½" MAX GRATE OPENING, REFER TO SPECIFICATIONS
ADJACENT SURFACE, TYP. REFER TO PLANS
(2) #4 HORIZONTAL REBAR, TYP. ON EACH EDGE
4"
3" TYP.
CONCRETE BACKFILL WITH MEDIUM BROOM FINISH LENGTHWISE
TRENCH DRAIN DEPTH VARIES, REFER TO DRAINAGE PLAN
COMPACTED SUBGRADE, REFER TO SPECIFICATIONS

NOTES:

1. PROVIDE SAW CUT JOINT 8' ON CENTER.
2. JOINTS TO BE ON BOTH SIDES OF GRATE.
3. SEE PLANS FOR LOCATIONS.

I SANITARY SEWER CLEANOUT NTS

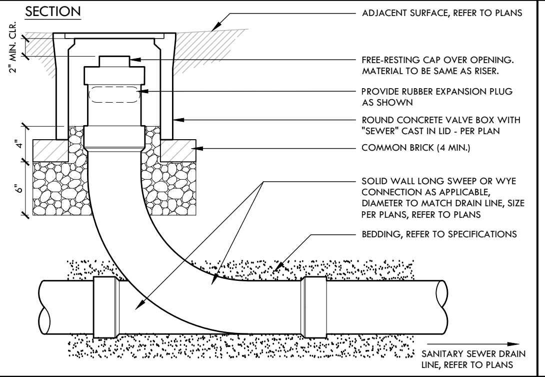
SECTION
2" MIN. CLR.
ADJACENT SURFACE, REFER TO PLANS
FREE-RESTING CAP OVER OPENING. MATERIAL TO BE SAME AS RISER.
PROVIDE RUBBER EXPANSION PLUG AS SHOWN
ROUND CONCRETE VALVE BOX WITH "SEWER" CAST IN LID - PER PLAN
COMMON BRICK (4 MIN.)
4"
6"
SOLID WALL LONG SWEEP OR WYE CONNECTION AS APPLICABLE, DIAMETER TO MATCH DRAIN LINE, SIZE PER PLANS, REFER TO PLANS
BEDDING, REFER TO SPECIFICATIONS
SANITARY SEWER DRAIN LINE, REFER TO PLANS

H PERFORATED SUBDRAIN NTS

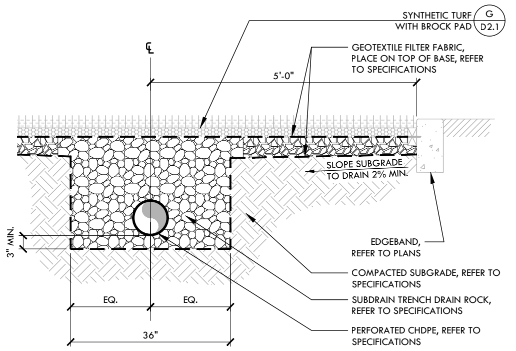
SYNTHETIC TURF WITH BROCK PAD G D2.1
℄
GEOTEXTILE FILTER FABRIC, PLACE ON TOP OF BASE, REFER TO SPECIFICATIONS
5'-0"
SLOPE SUBGRADE TO DRAIN 2% MIN.
3" MIN.
EDGEBAND, REFER TO PLANS
COMPACTED SUBGRADE, REFER TO SPECIFICATIONS
SUBDRAIN TRENCH DRAIN ROCK, REFER TO SPECIFICATIONS
PERFORATED CHDPE, REFER TO SPECIFICATIONS
EQ.
EQ.
36"

G CLEANOUT IN SYNTHETIC TURF NTS

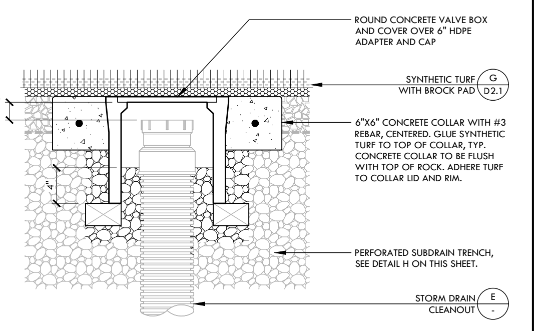
ROUND CONCRETE VALVE BOX AND COVER OVER 6" HDPE ADAPTER AND CAP
SYNTHETIC TURF WITH BROCK PAD G D2.1
2" MIN. CLR.
6"X6" CONCRETE COLLAR WITH #3 REBAR, CENTERED. GLUE SYNTHETIC TURF TO TOP OF COLLAR, TYP. CONCRETE COLLAR TO BE FLUSH WITH TOP OF ROCK. ADHERE TURF TO COLLAR LID AND RIM.
4"
PERFORATED SUBDRAIN TRENCH, SEE DETAIL H ON THIS SHEET.
STORM DRAIN CLEANOUT E -

F CLEANOUT BOX NTS

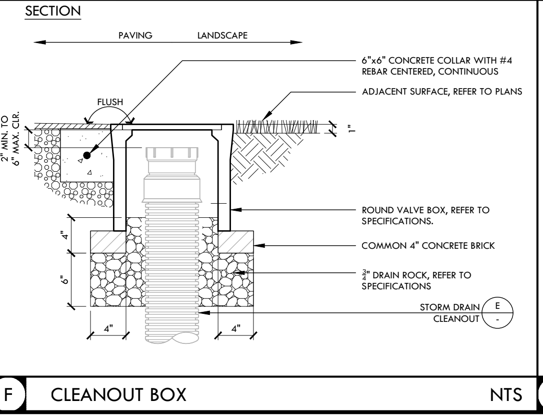
SECTION
PAVING
LANDSCAPE
6"x6" CONCRETE COLLAR WITH #4 REBAR CENTERED, CONTINUOUS
ADJACENT SURFACE, REFER TO PLANS
FLUSH
2" MIN. TO 6" MAX. CLR.
1"
ROUND VALVE BOX, REFER TO SPECIFICATIONS.
COMMON 4" CONCRETE BRICK
4"
6"
¾" DRAIN ROCK, REFER TO SPECIFICATIONS
STORM DRAIN CLEANOUT E -
4"
4"

E STORM DRAIN CLEANOUT NTS

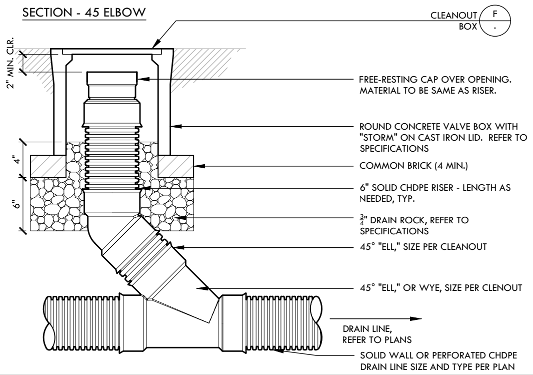
SECTION - 45 ELBOW
CLEANOUT BOX F -
2" MIN. CLR.
FREE-RESTING CAP OVER OPENING. MATERIAL TO BE SAME AS RISER.
ROUND CONCRETE VALVE BOX WITH "STORM" ON CAST IRON LID. REFER TO SPECIFICATIONS
COMMON BRICK (4 MIN.)
4"
6"
6" SOLID CHDPE RISER - LENGTH AS NEEDED, TYP.
¾" DRAIN ROCK, REFER TO SPECIFICATIONS
45° "ELL," SIZE PER CLEANOUT
45° "ELL," OR WYE, SIZE PER CLENOUT
DRAIN LINE, REFER TO PLANS
SOLID WALL OR PERFORATED CHDPE DRAIN LINE SIZE AND TYPE PER PLAN

D JUNCTION BOX - SYNTHETIC TURF NTS

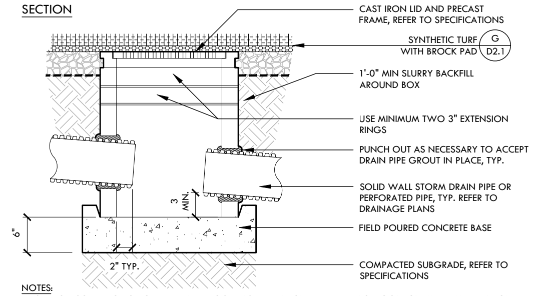
SECTION
CAST IRON LID AND PRECAST FRAME, REFER TO SPECIFICATIONS
SYNTHETIC TURF WITH BROCK PAD G D2.1
1'-0" MIN SLURRY BACKFILL AROUND BOX
USE MINIMUM TWO 3" EXTENSION RINGS
PUNCH OUT AS NECESSARY TO ACCEPT DRAIN PIPE GROUT IN PLACE, TYP.
SOLID WALL STORM DRAIN PIPE OR PERFORATED PIPE, TYP. REFER TO DRAINAGE PLANS
3 MIN.
FIELD POURED CONCRETE BASE
6"
2" TYP.
COMPACTED SUBGRADE, REFER TO SPECIFICATIONS

NOTES:

1. SET BOX COVER TO TOP OF PERMEABLE ROCK BASE ELEVATION. VERIFY EXACT LOCATION AND RIM ELEVATION PRIOR TO INSTALLATION.
2. POSITIVE DRAINAGE TO INLET SHALL BE VERIFIED BY CONTRACTOR.
3. ALL PIPING ENTRIES AND EXITS INTO DRAINAGE STRUCTURES SHALL BE GROUTED SMOOTH AND WATERTIGHT USING NON-SHRINK GROUT, TYP.
4. ALL RISERS AND EXTENSIONS SHALL BE CONNECTED WITH AN ADHESIVE PRODUCT, REFER TO SPECIFICATIONS. DO NOT CUT A HOLE IN TURF FOR JUNCTION BOX.

C JUNCTION BOX - SOFTSCAPE NTS

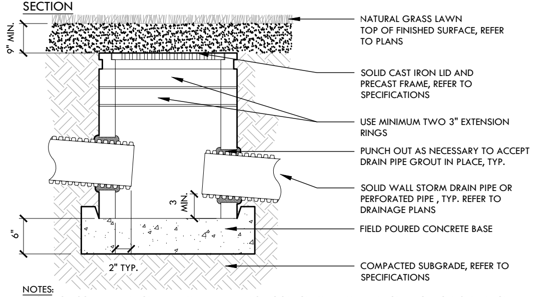
SECTION
9" MIN.
NATURAL GRASS LAWN TOP OF FINISHED SURFACE, REFER TO PLANS
SOLID CAST IRON LID AND PRECAST FRAME, REFER TO SPECIFICATIONS
USE MINIMUM TWO 3" EXTENSION RINGS
PUNCH OUT AS NECESSARY TO ACCEPT DRAIN PIPE GROUT IN PLACE, TYP.
SOLID WALL STORM DRAIN PIPE OR PERFORATED PIPE , TYP. REFER TO DRAINAGE PLANS
3 MIN.
FIELD POURED CONCRETE BASE
6"
2" TYP.
COMPACTED SUBGRADE, REFER TO SPECIFICATIONS

NOTES:

1. SET BOX COVER ELEVATION PER PLAN. VERIFY EXACT LOCATION AND RIM ELEVATION PRIOR TO INSTALLATION.
2. POSITIVE DRAINAGE TO INLET SHALL BE VERIFIED BY CONTRACTOR.
3. ALL PIPING ENTRIES AND EXITS INTO DRAINAGE STRUCTURES SHALL BE GROUTED SMOOTH AND WATERTIGHT USING NON-SHRINK GROUT, TYP.
4. ALL RISERS AND EXTENSIONS SHALL BE CONNECTED WITH AN ADHESIVE PRODUCT (RAMNEK OR EQUIVALENT).

B CATCH BASIN/JUNCTION BOX - HARDSCAPE NTS

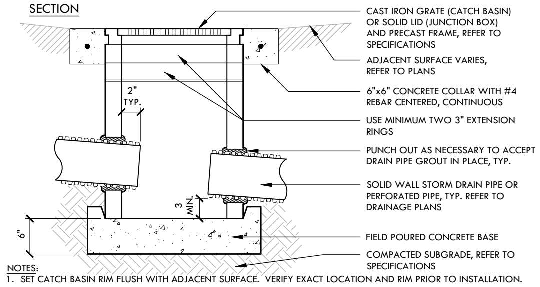
SECTION
CAST IRON GRATE (CATCH BASIN) OR SOLID LID (JUNCTION BOX) AND PRECAST FRAME, REFER TO SPECIFICATIONS
ADJACENT SURFACE VARIES, REFER TO PLANS
6"x6" CONCRETE COLLAR WITH #4 REBAR CENTERED, CONTINUOUS
2" TYP.
USE MINIMUM TWO 3" EXTENSION RINGS
PUNCH OUT AS NECESSARY TO ACCEPT DRAIN PIPE GROUT IN PLACE, TYP.
SOLID WALL STORM DRAIN PIPE OR PERFORATED PIPE, TYP. REFER TO DRAINAGE PLANS
3 MIN.
6"
FIELD POURED CONCRETE BASE
COMPACTED SUBGRADE, REFER TO SPECIFICATIONS

NOTES:

1. SET CATCH BASIN RIM FLUSH WITH ADJACENT SURFACE. VERIFY EXACT LOCATION AND RIM PRIOR TO INSTALLATION.
2. POSITIVE DRAINAGE TO INLET SHALL BE VERIFIED BY CONTRACTOR.
3. ALL PIPING ENTRIES AND EXITS INTO DRAINAGE STRUCTURES SHALL BE GROUTED SMOOTH AND WATERTIGHT USING NON-SHRINK GROUT, TYP.
4. ALL RISERS AND EXTENSIONS SHALL BE CONNECTED WITH AN ADHESIVE PRODUCT, REFER TO SPECIFICATIONS.
5. ALL LIDS/GRATES SHALL BE FITTED WITH LOCK-DOWN MECHANISMS OR BOLT-DOWN COVERS.
6. FOR BASIN SIZE, RIM AND INVERT ELEVATIONS, REFER TO DRAINAGE PLAN.
7. GRATE OPENINGS IN PEDESTRIAN PATHS SHALL HAVE MAXIMUM 1/2 IN. OPENINGS AND SHALL BE PERPENDICULAR TO THE DIRECTION OF TRAVEL.

A TRENCH BACKFILL - SOLID WALL STORM/SEWER NTS

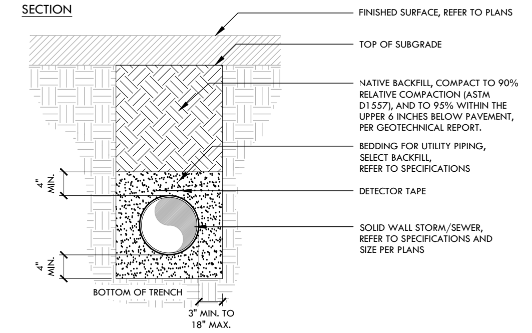
SECTION
FINISHED SURFACE, REFER TO PLANS
TOP OF SUBGRADE
NATIVE BACKFILL, COMPACT TO 90% RELATIVE COMPACTION (ASTM D1557), AND TO 95% WITHIN THE UPPER 6 INCHES BELOW PAVEMENT, PER GEOTECHNICAL REPORT.
BEDDING FOR UTILITY PIPING, SELECT BACKFILL, REFER TO SPECIFICATIONS
DETECTOR TAPE
4" MIN.
SOLID WALL STORM/SEWER, REFER TO SPECIFICATIONS AND SIZE PER PLANS
4" MIN.
BOTTOM OF TRENCH
3" MIN. TO 18" MAX.

NOTE:

CONTRACTOR TO INSTALL SURFACING IMPROVEMENTS PER DRAWINGS. SECTIONS FOR SURFACING IMPROVEMENTS SHALL SUPERCEDE BACKFILL FOR STORM DRAINS.

IDENTIFICATION STAMP
DIV. OF THE STATE ARCHITECT
APP: 02-123587 INC:
REVIEWED FOR
SS ☑ FLS ☑ ACS ☑
DATE: 01/16/2026

VERDE DESIGN
LANDSCAPE ARCHITECTURE
CIVIL ENGINEERING
SPORT PLANNING & DESIGN
1843 Iron Point Rd. Suite 140
Folsom, CA 95630
tel: 916.415.6554
fax: 916.415.6525
www.VerdeDesigninc.com

STAMP

REGISTERED LANDSCAPE ARCHITECT
MARK S. BAGINSKI
No. 4089
EXPIRATION DATE: JULY 2027
STATE OF CALIFORNIA

CONSULTANT

KEYMAP

SHEET TITLE

DRAINAGE AND
UTILITY DETAILS

PROJECT NAME

LODI HIGH SCHOOL
ATHLETIC FIELD
IMPROVEMENTS

PROJECT ADDRESS

3 S PACIFIC AVE
LODI, CA
95242

SUBMITTAL	DATE
50% DSA SUBMITTAL	07/31/25
100% DSA SUBMITTAL	09/25/25
DSA BACKCHECK SUBMITTAL	12/17/25
DSA BACKCHECK SUBMITTAL	01/08/26

NO.	REVISIONS	DATE
△		
△		
△		
△		
△		
△		

DRAWN BY	CHECKED BY
VDI	CS/MB

DATE ISSUED	SCALE
01/08/2026	AS NOTED

PROJ. NO. 2502700

SHEET NO. D1.1

DRAINAGE AND UTILITY DETAILS

ALL IDEAS, DESIGNS, ARRANGEMENTS, AND PLANS INDICATED OR REPRESENTED BY THIS DRAWING ARE OWNED BY AND THE PROPERTY OF VERDE DESIGN, INC. AND WERE CREATED, EVOLVED, AND DEVELOPED FOR USE ON AND IN CONNECTION WITH THE SPECIFIED PROJECT. NONE OF SUCH IDEAS, DESIGNS, ARRANGEMENTS OR PLANS SHALL BE USED, REPRODUCED, OR PUBLISHED BY ANY METHOD, IN WHOLE OR IN PART, OR DISCLOSED TO ANY PERSON, FIRM, OR CORPORATION FOR ANY PURPOSE WHATSOEVER WITHOUT WRITTEN PERMISSION OF VERDE DESIGN, INC.

DRAWING NAME: Y:\Projects-F0\2025\2502700 - Lodi HS Baseball and Softball Field\CAD_DTL_DRN.dwg
PLOT DATE: 12-15-25 PLOTTED BY: station23

CITY OF LODI
PUBLIC WORKS DEPARTMENT

Thrust Block Requirements

No thrusting on cross except where ends are plugged.

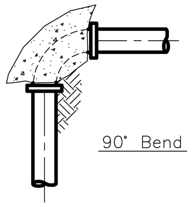
90° Bend

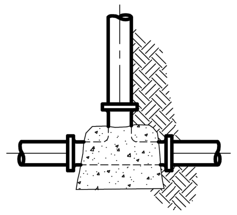
Tee

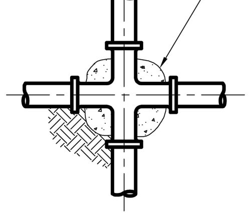
Cross

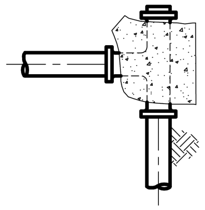
Plugged Tee

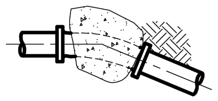
45° or 22½°
Horizontal Bend

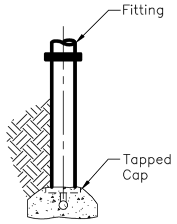
Fitting
Tapped Cap
Blow off

Minimum Thrust Block Bearing Areas In Square Feet				
Pipe Sizes	90°	45°	22½°	Tees & Blow Off
6"	3	2	2	2
8"	4	3	2	3
10"	6	4	3	4
12"	8	5	3	6
14"	12	7	4	8

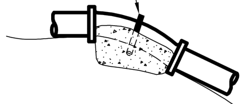
# 4 Reinforcing Bar
Vertical Bend

Notes:

1. Concrete shall be 2000 PSI minimum at 28 days.
2. Thrust blocks shall be placed against undisturbed earth.
3. All fittings shall be supported in concrete.
4. For fire hydrant thrusting see Std. Plan 401.
5. Don't cover flange bolts with concrete.
6. Mechanically restrained joints as required by the City.
7. Wrap all fittings and flanges with Visqueen.

		No.	Date	Revision	Appr.
Dr.	KT	1	9/03	ADDED NOTE #7	
Ch.	WS				
Date	12/00				

Approved By: F. Wally Sandelin
F. Wally Sandelin
City Engineer
R.C.E. 39895
9/25/02
Date

STD PLAN
405

D THRUST BLOCK

CITY OF LODI
PUBLIC WORKS DEPARTMENT

Fire Hydrant Installation

Note: Where main is over 150' from hydrant a second valve shall be installed in-line in the vicinity of the hydrant (15'-30') Refer to water valve installation Standard Plan 402.

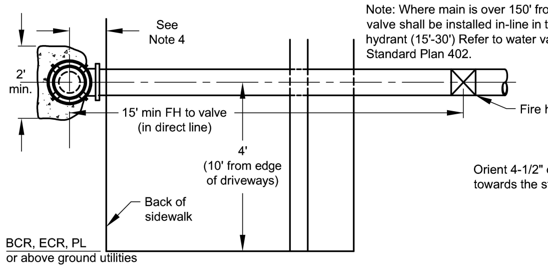
See Note 4
2' min.
15' min FH to valve (in direct line)
4' (10' from edge of driveways)
Back of sidewalk
BCR, ECR, PL or above ground utilities
Fire hydrant valve

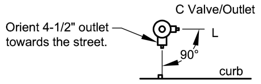
C Valve/Outlet
L
Orient 4-1/2" outlet towards the street.
90°
curb
Hydrant Orientation

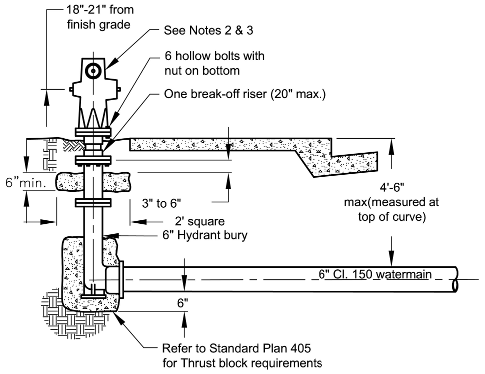
18"-21" from finish grade
See Notes 2 & 3
6 hollow bolts with nut on bottom
One break-off riser (20" max.)
6"min.
3" to 6"
2' square
6" Hydrant bury
4'-6" max(measured at top of curve)
6" Cl. 150 watermain
6"
Refer to Standard Plan 405 for Thrust block requirements

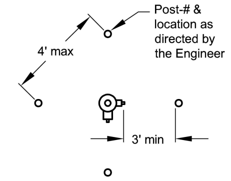
Post-# & location as directed by the Engineer
4' max
3' min
Guard Post Location Detail

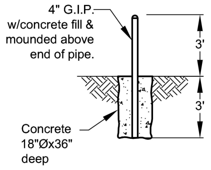
4" G.I.P. w/concrete fill & mounded above end of pipe.
3'
3'
Concrete 18"Øx36" deep
Guard Post Construction Detail
See Note #5

Notes:

1. All work and material shall conform to City of Lodi Construction Specifications.
2. Hydrants shall be painted Federal Yellow at the factory and furnished with National Standard Hose Thread outlets and cast iron caps.
3. All Hydrants one 4-1/2" outlet & one 2-1/2" outlet; with fusion epoxy coated interior. Clow 850; Clow 950; AVK 24/70; Jones 4040.
4. Locate C/L of hydrant per the following:
   1.5' behind walk where F.O.C. to B.O.W. distance is 7.0' or less.
   2.5' behind F.O.C. where F.O.C. to B.O.W. distance is greater than 7.0'
   5' behind F.O.C. in planters.
5. Install guard posts where hydrants are installed in paved areas accessible to traffic or in planters where hydrant is less than 3' behind the curb or when directed by the City.
6. For trench backfill requirement, See Standard Plan 501.
7. Install blue retroreflective hydrant pavement marker per std. plan 716.

		No.	Date	Revision	Appr.
Dr.	JP	1	2/08	ADJUSTED GUARD POST DEPTH	
Ch.	SN	2	4/22	ORIENTED 4-1/2 OUTLET TO STREET	
Date	11/22	3	10/22	15' MIN FH TO VALVE	
		4	11/22	ADDED NOTE 18-21" TO FG	

Approved By:
Lyman Chang
City Engineer
RCE No. 53149
11/29/22
Date

STD PLAN
401

B FIRE HYDRANT NTS

NOT USED

C

PLAN VIEW

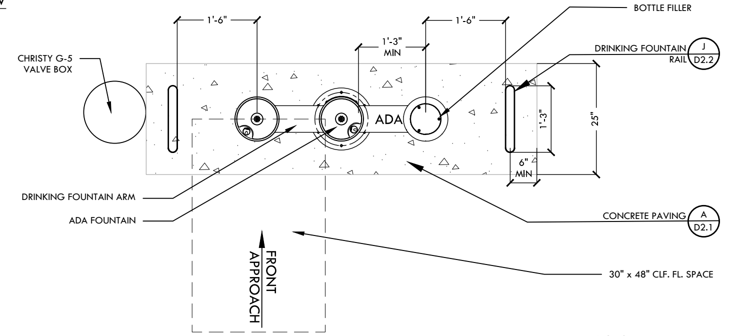
1'-6"
1'-6"
1'-3" MIN
BOTTLE FILLER
CHRISTY G-5 VALVE BOX
DRINKING FOUNTAIN RAIL J D2.2
ADA
1'-3"
25"
6" MIN
DRINKING FOUNTAIN ARM
ADA FOUNTAIN
CONCRETE PAVING A D2.1
FRONT APPROACH
30" x 48" CLF. FL. SPACE

NOTES:
1. REFER TO DRINKING FOUNTAIN PLAN AND SPECIFICATIONS.
2. FOUNTAIN SHALL HAVE SAME DIRECTION OF APPROACH FOR BOTH HI & LO USERS.
3. DRINKING FOUNTAIN BUTTONS TO FACE TOWARD APPROACH.
4. DRINKING FOUNTAIN WATER FLOW SHALL CONFORM TO CBC 11B-602.6

ELEVATION VIEW

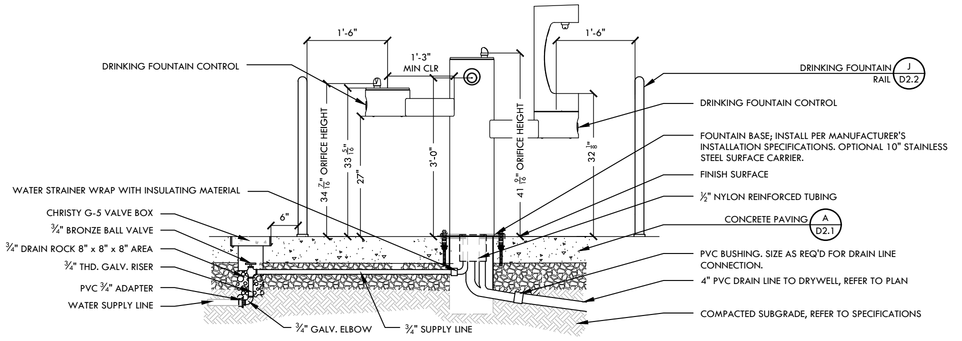
1'-6"
1'-3" MIN CLR
1'-6"
DRINKING FOUNTAIN CONTROL
DRINKING FOUNTAIN RAIL J D2.2
34 7/16" ORIFICE HEIGHT
33 5/16"
27"
3'-0"
41 9/16" ORIFICE HEIGHT
32 1/8"
DRINKING FOUNTAIN CONTROL
FOUNTAIN BASE; INSTALL PER MANUFACTURER'S INSTALLATION SPECIFICATIONS. OPTIONAL 10" STAINLESS STEEL SURFACE CARRIER.
FINISH SURFACE
½" NYLON REINFORCED TUBING
CONCRETE PAVING A D2.1
WATER STRAINER WRAP WITH INSULATING MATERIAL
CHRISTY G-5 VALVE BOX
6"
¾" BRONZE BALL VALVE
¾" DRAIN ROCK 8" x 8" x 8" AREA
¾" THD. GALV. RISER
PVC ¾" ADAPTER
WATER SUPPLY LINE
¾" GALV. ELBOW
¾" SUPPLY LINE
PVC BUSHING. SIZE AS REQ'D FOR DRAIN LINE CONNECTION.
4" PVC DRAIN LINE TO DRYWELL, REFER TO PLAN
COMPACTED SUBGRADE, REFER TO SPECIFICATIONS

A DRINKING FOUNTAIN NTS

IDENTIFICATION STAMP
DIV. OF THE STATE ARCHITECT
APP: 02-123587 INC:
REVIEWED FOR
SS ☑ FLS ☑ ACS ☑
DATE: 01/16/2026

VERDE DESIGN
LANDSCAPE ARCHITECTURE
CIVIL ENGINEERING
SPORT PLANNING & DESIGN
1843 Iron Point Rd. Suite 140
Folsom, CA 95630
tel: 916.415.6554
fax: 916.415.6525
www.VerdeDesignInc.com

STAMP
REGISTERED LANDSCAPE ARCHITECT
MARK S. BAGINSKI
No. 4039
Signature
EXPIRATION DATE: JULY 2027
STATE OF CALIFORNIA

CONSULTANT

KEYMAP

SHEET TITLE
DRAINAGE AND
UTILITY DETAILS

PROJECT NAME
LODI HIGH SCHOOL
ATHLETIC FIELD
IMPROVEMENTS

PROJECT ADDRESS
3 S PACIFIC AVE
LODI, CA
95242

SUBMITTAL	DATE
50% DSA SUBMITTAL	07/31/25
100% DSA SUBMITTAL	09/25/25
DSA BACKCHECK SUBMITTAL	12/17/25
DSA BACKCHECK SUBMITTAL	01/08/26

NO.	REVISIONS	DATE
△		
△		
△		
△		
△		
△		

DRAWN BY: VDI
CHECKED BY: CS/MB
DATE ISSUED: 01/08/2026
SCALE: AS NOTED
PROJ. NO.: 2502700
SHEET NO.: D1.2

DRAINAGE AND UTILITY DETAILS

ALL IDEAS, DESIGNS, ARRANGEMENTS, AND PLANS INDICATED OR REPRESENTED BY THIS DRAWING ARE OWNED BY AND THE PROPERTY OF VERDE DESIGN, INC. AND WERE CREATED, EVOLVED, AND DEVELOPED FOR USE ON AND IN CONNECTION WITH THE SPECIFIED PROJECT. NONE OF SUCH IDEAS, DESIGNS, ARRANGEMENTS OR PLANS SHALL BE USED, REPRODUCED, OR PUBLISHED BY ANY METHOD, IN WHOLE OR IN PART, OR DISCLOSED TO ANY PERSON, FIRM, OR CORPORATION FOR ANY PURPOSE WHATSOEVER WITHOUT WRITTEN PERMISSION OF VERDE DESIGN, INC.

ALL IDEAS, DESIGNS, ARRANGEMENTS, AND PLANS INDICATED OR REPRESENTED BY THIS DRAWING ARE OWNED BY AND THE PROPERTY OF VERDE DESIGN, INC. AND WERE CREATED, EVOLVED, AND DEVELOPED FOR USE ON AND IN CONNECTION WITH THE SPECIFIED PROJECT. NONE OF SUCH IDEAS, DESIGNS, ARRANGEMENTS OR PLANS SHALL BE USED, REPRODUCED, OR PUBLISHED BY ANY METHOD, IN WHOLE OR IN PART, OR DISCLOSED TO ANY PERSON, FIRM, OR CORPORATION FOR ANY PURPOSE WHATSOEVER WITHOUT WRITTEN PERMISSION OF VERDE DESIGN, INC.

P

O DRIVEWAY NTS

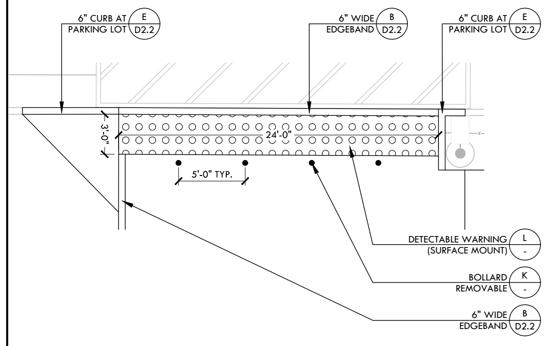
6" CURB AT PARKING LOT E D2.2
6" WIDE EDGEBAND B D2.2
6" CURB AT PARKING LOT E D2.2
3'-0"
24'-0"
5'-0" TYP.
DETECTABLE WARNING (SURFACE MOUNT) L -
BOLLARD REMOVABLE K -
6" WIDE EDGEBAND B D2.2

N RAMP NTS

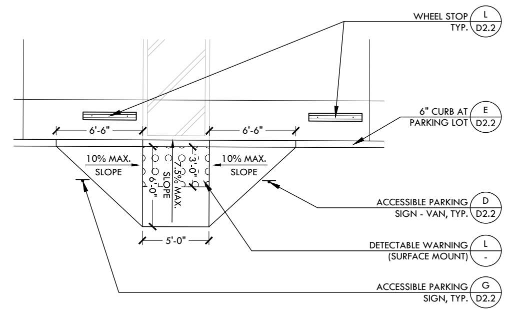
WHEEL STOP TYP. L D2.2
6'-6"
6'-6"
6" CURB AT PARKING LOT E D2.2
10% MAX. SLOPE
7.5% MAX. SLOPE
3'-0"
6'-0"
10% MAX. SLOPE
5'-0"
ACCESSIBLE PARKING SIGN - VAN, TYP. D D2.2
DETECTABLE WARNING (SURFACE MOUNT) L -
ACCESSIBLE PARKING SIGN, TYP. G D2.2

M CONCRETE VALLEY GUTTER NTS

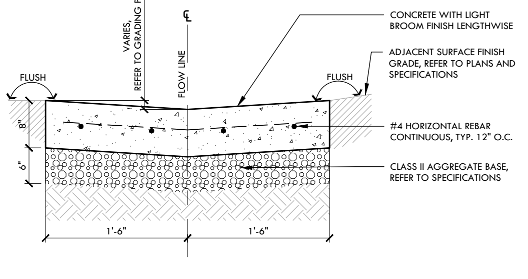
VARIES, REFER TO GRADING PLAN
℄
FLOW LINE
FLUSH
FLUSH
8"
6"
1'-6"
1'-6"
CONCRETE WITH LIGHT BROOM FINISH LENGTHWISE
ADJACENT SURFACE FINISH GRADE, REFER TO PLANS AND SPECIFICATIONS
#4 HORIZONTAL REBAR CONTINUOUS, TYP. 12" O.C.
CLASS II AGGREGATE BASE, REFER TO SPECIFICATIONS

NOTES:
1. PROVIDE SCORE JOINTS 8' ON CENTER.

L DETECTABLE WARNING (SURFACE MOUNT) NTS

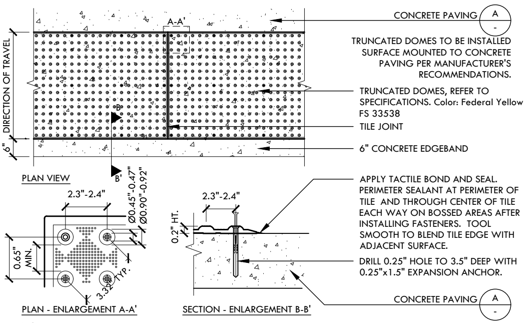
A-A'
3'-0" ALONG DIRECTION OF TRAVEL
6"
B
B'
CONCRETE PAVING A -
TRUNCATED DOMES TO BE INSTALLED SURFACE MOUNTED TO CONCRETE PAVING PER MANUFACTURER'S RECOMMENDATIONS.
TRUNCATED DOMES, REFER TO SPECIFICATIONS. Color: Federal Yellow FS 33538
TILE JOINT
6" CONCRETE EDGEBAND
PLAN VIEW
2.3"-2.4"
Ø0.45"-0.47"
Ø0.90"-0.92"
2.3"-2.4"
0.65" MIN.
3.32" TYP.
2.3"-2.4"
0.2" HT.
APPLY TACTILE BOND AND SEAL. PERIMETER SEALANT AT PERIMETER OF TILE AND THROUGH CENTER OF TILE EACH WAY ON BOSSED AREAS AFTER INSTALLING FASTENERS. TOOL SMOOTH TO BLEND TILE EDGE WITH ADJACENT SURFACE.
DRILL 0.25" HOLE TO 3.5" DEEP WITH 0.25"x1.5" EXPANSION ANCHOR.
CONCRETE PAVING A -
PLAN - ENLARGEMENT A-A'
SECTION - ENLARGEMENT B-B'

NOTE:
TRUNCATED DOMES, TYP. ACCORDING TO CALIFORNIA BUILDING CODES PER 11B.705.1.2.2 AND 11B.705.1.2.5 SHALL BE INSTALLED IN AREA WITH 36" MIN. WIDE DETECTABLE WARNING STRIP. REFER TO SPECIFICATIONS AND INSTALL PER MANUFACTURER'S RECOMMENDATIONS.

K BOLLARD - REMOVABLE NTS

PLAN

SECTION

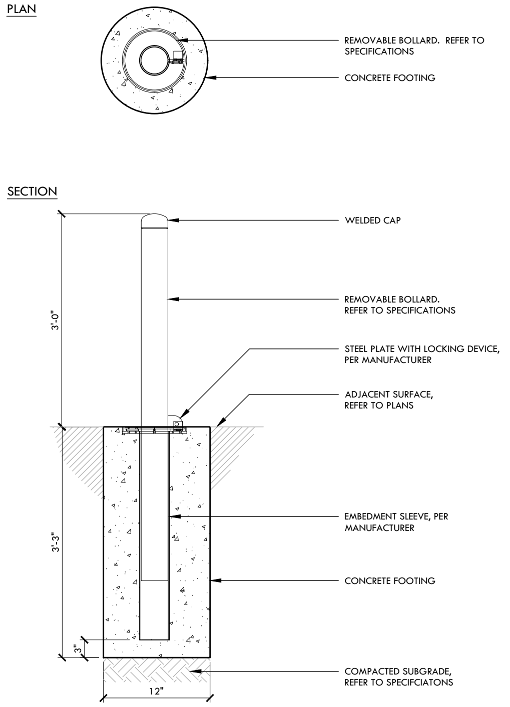
REMOVABLE BOLLARD. REFER TO SPECIFICATIONS
CONCRETE FOOTING
WELDED CAP
REMOVABLE BOLLARD. REFER TO SPECIFICATIONS
STEEL PLATE WITH LOCKING DEVICE, PER MANUFACTURER
ADJACENT SURFACE, REFER TO PLANS
EMBEDMENT SLEEVE, PER MANUFACTURER
CONCRETE FOOTING
COMPACTED SUBGRADE, REFER TO SPECFICIATONS
3'-0"
3'-3"
3"
12"

NOTES:
1. INSTALL AS PER MANUFACTURER'S SPECIFICATIONS.
2. SHOP DRAWINGS REQUIRED FOR REVIEW AND APPROVAL BY OWNER'S REPRESENTATIVE.

J INFIELD FINES TO SYNTHETIC TURF EDGE NTS

SECTION

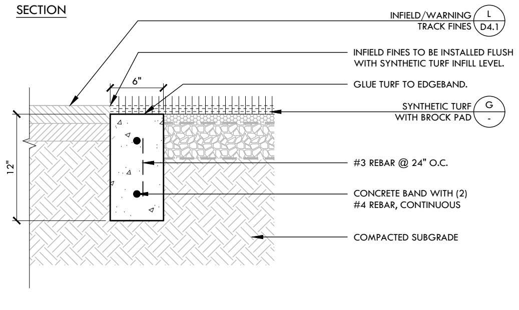
INFIELD/WARNING TRACK FINES L D4.1
INFIELD FINES TO BE INSTALLED FLUSH WITH SYNTHETIC TURF INFILL LEVEL.
GLUE TURF TO EDGEBAND.
SYNTHETIC TURF WITH BROCK PAD G -
#3 REBAR @ 24" O.C.
CONCRETE BAND WITH (2) #4 REBAR, CONTINUOUS
COMPACTED SUBGRADE
6"
12"

NOTE:
INFIELD FINES SHALL BE INSTALLED FLUSH WITH TOP OF SYNTHETIC TURF INFILL LEVEL.

I NATURAL TURF TO SYNTHETIC TURF EDGE NTS

SECTION

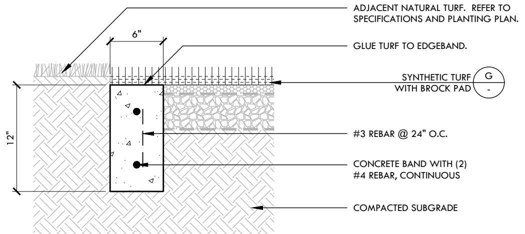
ADJACENT NATURAL TURF. REFER TO SPECIFICATIONS AND PLANTING PLAN.
GLUE TURF TO EDGEBAND.
SYNTHETIC TURF WITH BROCK PAD G -
#3 REBAR @ 24" O.C.
CONCRETE BAND WITH (2) #4 REBAR, CONTINUOUS
COMPACTED SUBGRADE
6"
12"

NOTE:
NATURAL TURF SHALL BE INSTALLED WITH FINISHED GRADE $\frac{1}{2}$" BELOW TOP OF SYNTHETIC TURF INFILL.

H SYNTHETIC TURF (NO INFILL) NTS

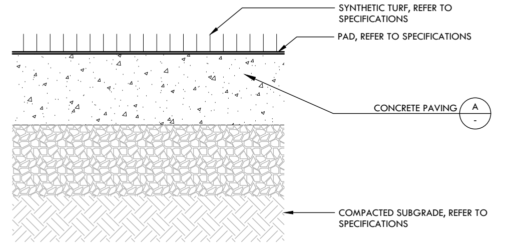
SYNTHETIC TURF, REFER TO SPECIFICATIONS
PAD, REFER TO SPECIFICATIONS
CONCRETE PAVING A -
COMPACTED SUBGRADE, REFER TO SPECIFICATIONS

SYNTHETIC TURF SECTION

NOTES PERTAIN TO ALL DETAILS WITH SYNTHETIC TURF:
1. NO MANUFACTURER, CONTRACTOR OR VENDOR LOGOS ARE TO BE INSTALLED UNLESS SPECIFIED.
2. NO CUT OUTS IN TURF SHALL BE MADE UNLESS OTHERWISE NOTED AND ESPECIALLY NO CUT OUTS IN THE FIELD OF PLAY. QUICK COUPLERS AND CLEANOUTS ARE THE ONLY UTILITIES TO BE CUT THROUGH TURF. QUICK COUPLERS ARE LOCATED ON THE PERIMETER AND OUT OF THE FIELD OF PLAY AREAS.

G SYNTHETIC TURF WITH BROCK PAD NTS

SYNTHETIC TURF SECTION

SYNTHETIC TURF CONNECTION

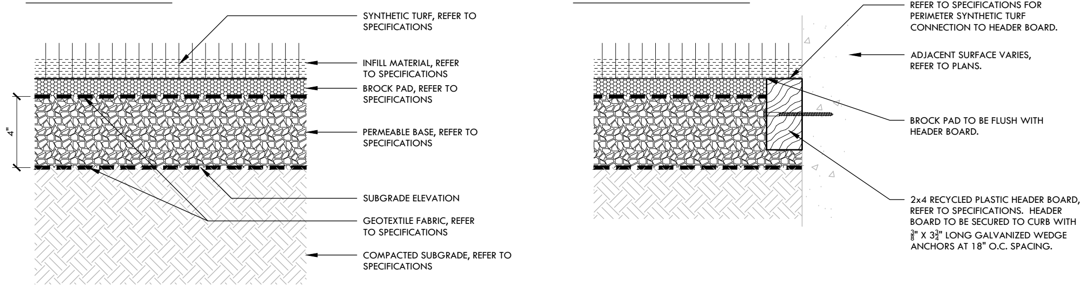
SYNTHETIC TURF, REFER TO SPECIFICATIONS
INFILL MATERIAL, REFER TO SPECIFICATIONS
BROCK PAD, REFER TO SPECIFICATIONS
PERMEABLE BASE, REFER TO SPECIFICATIONS
SUBGRADE ELEVATION
GEOTEXTILE FABRIC, REFER TO SPECIFICATIONS
COMPACTED SUBGRADE, REFER TO SPECIFICATIONS
4"
REFER TO SPECIFICATIONS FOR PERIMETER SYNTHETIC TURF CONNECTION TO HEADER BOARD.
ADJACENT SURFACE VARIES, REFER TO PLANS.
BROCK PAD TO BE FLUSH WITH HEADER BOARD.
2x4 RECYCLED PLASTIC HEADER BOARD, REFER TO SPECIFICATIONS. HEADER BOARD TO BE SECURED TO CURB WITH $\frac{3}{8}$" X 3$\frac{3}{4}$" LONG GALVANIZED WEDGE ANCHORS AT 18" O.C. SPACING.

NOTE:
REFER TO SYNTHETIC TURF NOTES, DETAIL F, THIS SHEET.

F SYNTHETIC TURF NOTES NTS

NOTES PERTAIN TO ALL DETAILS WITH SYNTHETIC TURF:

1. IDENTIFIED FINISH GRADES OF SYNTHETIC TURF SHALL BE THE TOP OF INFILL MATERIAL. INFILL MATERIAL SHALL BE $\frac{1}{4}$" BELOW ADJACENT SURFACES UNLESS EDGE IS A VERTICAL CURB.
2. INFIELD FINES TO BE INSTALLED FLUSH WITH SYNTHETIC TURF INFILL LEVEL.
3. BASEBALL AND SOFTBALL FIELD STRIPING SHALL BE INLAID OR TUFTED 4" WIDE WHITE LINES.
4. CONTRACTOR TO PROVIDE SHOP DRAWINGS FOR REVIEW AND ACCEPTANCE. ALL FIELD MARKINGS SHALL CONFORM TO CURRENT NFHS (NATIONAL FEDERATION OF STATE HIGH SCHOOL ASSOCIATIONS) AND C.I.F. (CALIFORNIA INTERSCHOLASTIC FEDERATION) GUIDELINES.
5. NO MANUFACTURER, CONTRACTOR OR VENDOR LOGOS ARE TO BE INSTALLED UNLESS SPECIFIED.
6. NO CUT OUTS IN TURF SHALL BE MADE UNLESS OTHERWISE NOTED AND ESPECIALLY NO CUT OUTS IN THE FIELD OF PLAY. QUICK COUPLERS ARE THE ONLY UTILITIES TO BE CUT THROUGH TURF. QUICK COUPLERS ARE LOCATED ON THE PERIMETER AND OUT OF THE FIELD OF PLAY AREAS.

E CONCRETE JOINTS NTS

NOTE:
"KEYED KOLD" JOINTS, SHALL MATCH THICKNESS OF CONCRETE PAVING AND BE INSTALLED AT LOCATIONS SHOWN ON MATERIAL PLANS.

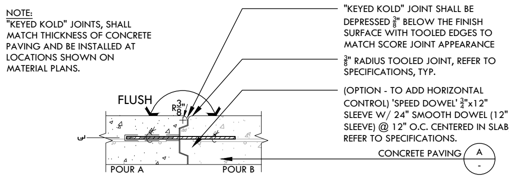
"KEYED KOLD" JOINT SHALL BE DEPRESSED $\frac{3}{8}$" BELOW THE FINISH SURFACE WITH TOOLED EDGES TO MATCH SCORE JOINT APPEARANCE
$\frac{3}{8}$" RADIUS TOOLED JOINT, REFER TO SPECIFICATIONS, TYP.
(OPTION - TO ADD HORIZONTAL CONTROL) 'SPEED DOWEL' $\frac{3}{4}$"x12" SLEEVE W/ 24" SMOOTH DOWEL (12" SLEEVE) @ 12" O.C. CENTERED IN SLAB, REFER TO SPECIFICATIONS.
CONCRETE PAVING A -
FLUSH
R$\frac{3}{8}$"
℄
POUR A
POUR B

KEYED KOLD JOINT - VERTICAL AND LONGITUDINAL CONTROL
SECTION

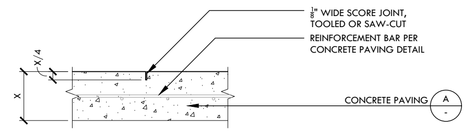
$\frac{1}{8}$" WIDE SCORE JOINT, TOOLED OR SAW-CUT
REINFORCEMENT BAR PER CONCRETE PAVING DETAIL
CONCRETE PAVING A -
X/4
X

SCORE JOINT
SECTION

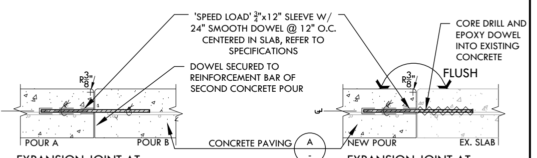
'SPEED LOAD' $\frac{3}{4}$"x12" SLEEVE W/ 24" SMOOTH DOWEL @ 12" O.C. CENTERED IN SLAB, REFER TO SPECIFICATIONS
DOWEL SECURED TO REINFORCEMENT BAR OF SECOND CONCRETE POUR
CORE DRILL AND EPOXY DOWEL INTO EXISTING CONCRETE
FLUSH
R$\frac{3}{8}$"
R$\frac{3}{8}$"
℄
℄
POUR A
POUR B
CONCRETE PAVING A -
NEW POUR
EX. SLAB

EXPANSION JOINT AT NEW CONCRETE
SECTION

EXPANSION JOINT AT EXISTING CONCRETE
SECTION

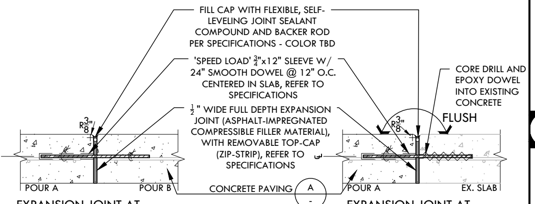
FILL CAP WITH FLEXIBLE, SELF-LEVELING JOINT SEALANT COMPOUND AND BACKER ROD PER SPECIFICATIONS - COLOR TBD
'SPEED LOAD' $\frac{3}{4}$"x12" SLEEVE W/ 24" SMOOTH DOWEL @ 12" O.C. CENTERED IN SLAB, REFER TO SPECIFICATIONS
$\frac{1}{2}$" WIDE FULL DEPTH EXPANSION JOINT (ASPHALT-IMPREGNATED COMPRESSIBLE FILLER MATERIAL), WITH REMOVABLE TOP-CAP (ZIP-STRIP), REFER TO SPECIFICATIONS
CORE DRILL AND EPOXY DOWEL INTO EXISTING CONCRETE
FLUSH
R$\frac{3}{8}$"
R$\frac{3}{8}$"
℄
℄
POUR A
POUR B
CONCRETE PAVING A -
POUR A
EX. SLAB

EXPANSION JOINT AT NEW CONCRETE
SECTION

EXPANSION JOINT AT EXISTING CONCRETE
SECTION

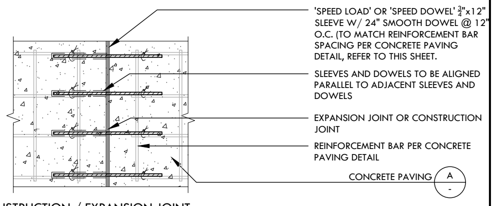
'SPEED LOAD' OR 'SPEED DOWEL' $\frac{3}{4}$"x12" SLEEVE W/ 24" SMOOTH DOWEL @ 12" O.C. (TO MATCH REINFORCEMENT BAR SPACING PER CONCRETE PAVING DETAIL, REFER TO THIS SHEET.
SLEEVES AND DOWELS TO BE ALIGNED PARALLEL TO ADJACENT SLEEVES AND DOWELS
EXPANSION JOINT OR CONSTRUCTION JOINT
REINFORCEMENT BAR PER CONCRETE PAVING DETAIL
CONCRETE PAVING A -

CONSTRUCTION / EXPANSION JOINT
PLAN

D CONCRETE PAVING FINISH NTS

PLAN

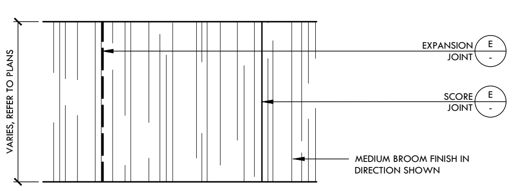
VARIES, REFER TO PLANS
EXPANSION JOINT E -
SCORE JOINT E -
MEDIUM BROOM FINISH IN DIRECTION SHOWN

NOTE:
PROVIDE SCORE JOINTS 5' O.C. AND 10' O.C. FOR EXPANSION JOINT UNLESS OTHERWISE NOTED.

C ASPHALT PATCH NTS

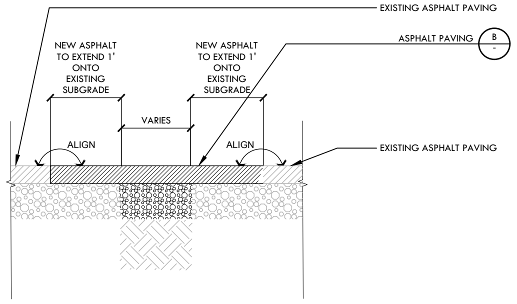
EXISTING ASPHALT PAVING
ASPHALT PAVING B -
NEW ASPHALT TO EXTEND 1' ONTO EXISTING SUBGRADE
NEW ASPHALT TO EXTEND 1' ONTO EXISTING SUBGRADE
VARIES
ALIGN
ALIGN
EXISTING ASPHALT PAVING

B ASPHALT PAVING NTS

SECTION

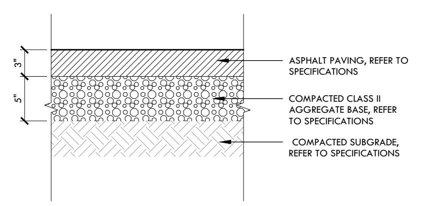
3"
5"
ASPHALT PAVING, REFER TO SPECIFICATIONS
COMPACTED CLASS II AGGREGATE BASE, REFER TO SPECIFICATIONS
COMPACTED SUBGRADE, REFER TO SPECIFICATIONS

A CONCRETE PAVING NTS

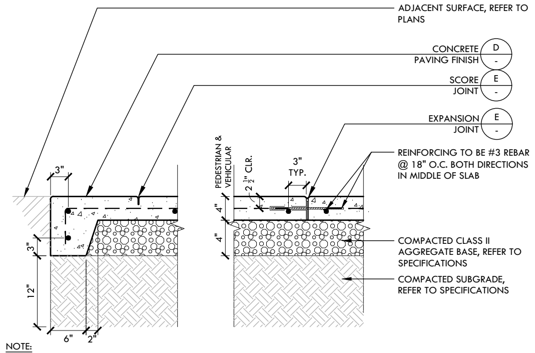
ADJACENT SURFACE, REFER TO PLANS
CONCRETE PAVING FINISH D -
SCORE JOINT E -
EXPANSION JOINT E -
REINFORCING TO BE #3 REBAR @ 18" O.C. BOTH DIRECTIONS IN MIDDLE OF SLAB
COMPACTED CLASS II AGGREGATE BASE, REFER TO SPECIFICATIONS
COMPACTED SUBGRADE, REFER TO SPECIFICATIONS
PEDESTRIAN & VEHICULAR
2$\frac{1}{2}$" CLR.
3" TYP.
3"
3"
12"
6"
2"
4"
4"

NOTE:
1. PROVIDE SCORE JOINTS 5' O.C. AND 10' O.C. FOR EXPANSION JOINT UNLESS OTHERWISE NOTED.

IDENTIFICATION STAMP
DIV. OF THE STATE ARCHITECT
APP: 02-123587 INC:
REVIEWED FOR
SS ☑ FLS ☑ ACS ☑
DATE: 01/16/2026

VERDE DESIGN
LANDSCAPE ARCHITECTURE
CIVIL ENGINEERING
SPORT PLANNING & DESIGN
1843 Iron Point Rd. Suite 140
Folsom, CA 95630
tel: 916.415.6554
fax: 916.415.6525
www.VerdeDesignInc.com

STAMP

MARK S. BAGINSKI
No. 4089
Signature
EXPIRATION DATE: JULY 2027

CONSULTANT

KEYMAP

SHEET TITLE
CONSTRUCTION
DETAILS - HARDSCAPE

PROJECT NAME
LODI HIGH SCHOOL
ATHLETIC FIELD
IMPROVEMENTS

PROJECT ADDRESS
3 S PACIFIC AVE
LODI, CA
95242

SUBMITTAL	DATE
50% DSA SUBMITTAL	07/31/25
100% DSA SUBMITTAL	09/25/25
DSA BACKCHECK SUBMITTAL	12/17/25
DSA BACKCHECK SUBMITTAL	01/08/26

NO.	REVISIONS	DATE
△		
△		
△		
△		
△		
△		

DRAWN BY: VDI
CHECKED BY: CS/MB
DATE ISSUED: 01/08/2026
SCALE: AS NOTED
PROJ. NO.: 2502700
SHEET NO.: D2.1

ALL IDEAS, DESIGNS, ARRANGEMENTS, AND PLANS INDICATED OR REPRESENTED BY THIS DRAWING ARE OWNED BY AND THE PROPERTY OF VERDE DESIGN, INC. AND WERE CREATED, EVOLVED, AND DEVELOPED FOR USE ON AND IN CONNECTION WITH THE SPECIFIED PROJECT. NONE OF SUCH IDEAS, DESIGNS, ARRANGEMENTS OR PLANS SHALL BE USED, REPRODUCED, OR PUBLISHED BY ANY METHOD, IN WHOLE OR IN PART, OR DISCLOSED TO ANY PERSON, FIRM, OR CORPORATION FOR ANY PURPOSE WHATSOEVER WITHOUT WRITTEN PERMISSION OF VERDE DESIGN, INC.

T

S

R

Q

P

O

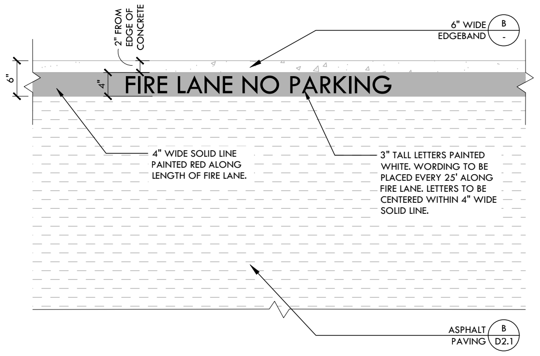
2" FROM EDGE OF CONCRETE
6" WIDE EDGEBAND (B / -)
6"
4"
FIRE LANE NO PARKING
4" WIDE SOLID LINE PAINTED RED ALONG LENGTH OF FIRE LANE.
3" TALL LETTERS PAINTED WHITE. WORDING TO BE PLACED EVERY 25' ALONG FIRE LANE. LETTERS TO BE CENTERED WITHIN 4" WIDE SOLID LINE.
ASPHALT PAVING (B / D2.1)

N FIRE LANE STRIPING NTS

SECTION

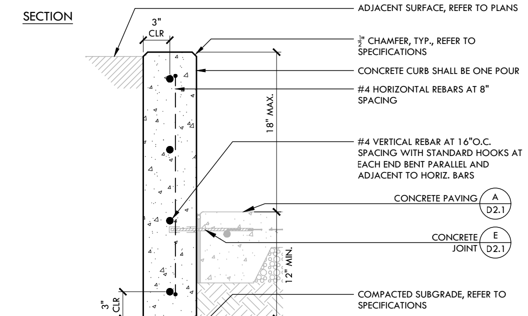
ADJACENT SURFACE, REFER TO PLANS
3" CLR
½" CHAMFER, TYP., REFER TO SPECIFICATIONS
CONCRETE CURB SHALL BE ONE POUR
#4 HORIZONTAL REBARS AT 8" SPACING
18" MAX.
#4 VERTICAL REBAR AT 16"O.C. SPACING WITH STANDARD HOOKS AT EACH END BENT PARALLEL AND ADJACENT TO HORIZ. BARS
CONCRETE PAVING (A / D2.1)
CONCRETE JOINT (E / D2.1)
12" MIN.
3" CLR
COMPACTED SUBGRADE, REFER TO SPECIFICATIONS
6"

NOTE:
REFER TO EDGEBAND AND TALL CURB NOTES, DETAIL A, THIS SHEET FOR ADDITIONAL INFORMATION.

M 6" WIDE TALL CURB NTS

SECTION

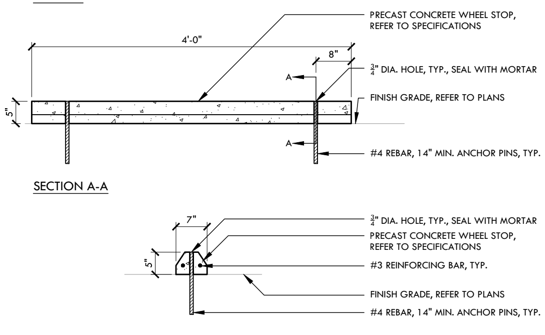
PRECAST CONCRETE WHEEL STOP, REFER TO SPECIFICATIONS
4'-0"
8"
¾" DIA. HOLE, TYP., SEAL WITH MORTAR
A
FINISH GRADE, REFER TO PLANS
5"
A
#4 REBAR, 14" MIN. ANCHOR PINS, TYP.
SECTION A-A
7"
¾" DIA. HOLE, TYP., SEAL WITH MORTAR
PRECAST CONCRETE WHEEL STOP, REFER TO SPECIFICATIONS
5"
#3 REINFORCING BAR, TYP.
FINISH GRADE, REFER TO PLANS
#4 REBAR, 14" MIN. ANCHOR PINS, TYP.

NOTE:
SHOP DRAWINGS REQUIRED FOR REVIEW AND APPROVAL BY DISTRICT'S REPRESENTATIVE PRIOR TO FABRICATION.

L WHEEL STOP NTS

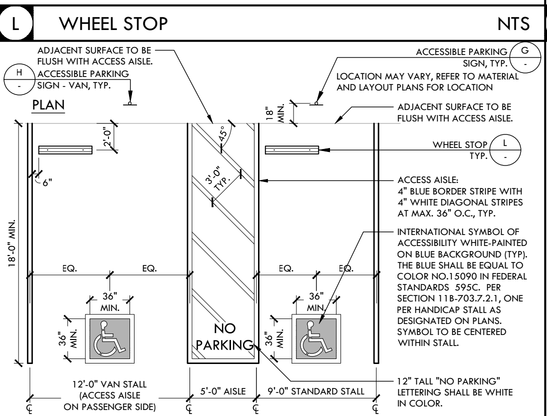
ADJACENT SURFACE TO BE FLUSH WITH ACCESS AISLE.
ACCESSIBLE PARKING SIGN - VAN, TYP. (H / -)
PLAN
ACCESSIBLE PARKING SIGN, TYP. (G / -)
LOCATION MAY VARY, REFER TO MATERIAL AND LAYOUT PLANS FOR LOCATION
18" MIN.
ADJACENT SURFACE TO BE FLUSH WITH ACCESS AISLE.
2'-0"
45°
WHEEL STOP TYP. (L / -)
6"
3'-0" TYP.
ACCESS AISLE: 4" BLUE BORDER STRIPE WITH 4" WHITE DIAGONAL STRIPES AT MAX. 36" O.C., TYP.
18'-0" MIN.
INTERNATIONAL SYMBOL OF ACCESSIBILITY WHITE-PAINTED ON BLUE BACKGROUND (TYP). THE BLUE SHALL BE EQUAL TO COLOR NO.15090 IN FEDERAL STANDARDS 595C. PER SECTION 11B-703.7.2.1, ONE PER HANDICAP STALL AS DESIGNATED ON PLANS. SYMBOL TO BE CENTERED WITHIN STALL.
EQ.
EQ.
EQ.
EQ.
36" MIN.
36" MIN.
36" MIN.
36" MIN.
NO PARKING
12'-0" VAN STALL (ACCESS AISLE ON PASSENGER SIDE)
5'-0" AISLE
9'-0" STANDARD STALL
12" TALL "NO PARKING" LETTERING SHALL BE WHITE IN COLOR.

K ADA PARKING STALL NTS

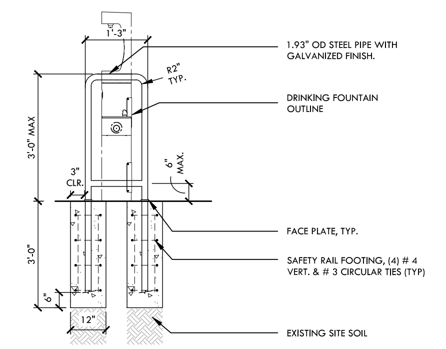
1'-3"
1.93" OD STEEL PIPE WITH GALVANIZED FINISH.
R2" TYP.
DRINKING FOUNTAIN OUTLINE
3'-0" MAX
3" CLR.
6" MAX.
FACE PLATE, TYP.
3'-0"
SAFETY RAIL FOOTING, (4) # 4 VERT. & # 3 CIRCULAR TIES (TYP)
6"
12"
EXISTING SITE SOIL

J DRINKING FOUNTAIN RAIL

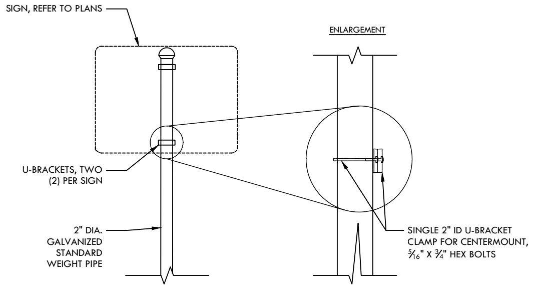
SIGN, REFER TO PLANS
ENLARGEMENT
U-BRACKETS, TWO (2) PER SIGN
2" DIA. GALVANIZED STANDARD WEIGHT PIPE
SINGLE 2" ID U-BRACKET CLAMP FOR CENTERMOUNT, 5/16" X ¾" HEX BOLTS

NOTES:

1. ALL FASTENERS AND HARDWARE TO BE GALVANIZED, UNLESS OTHERWISE NOTED.
2. CONTRACTOR TO INSTALL SIGN TO FACE STREET OR AT RIGHT ANGLE TO WALKWAY.
3. HARDWARE TO BE ADJUSTED AS NECESSARY AS NOT TO OBSTRUCT OR BLOCK LANGUAGE ON FRONT OF SIGN.

I SIGN MOUNTING NTS

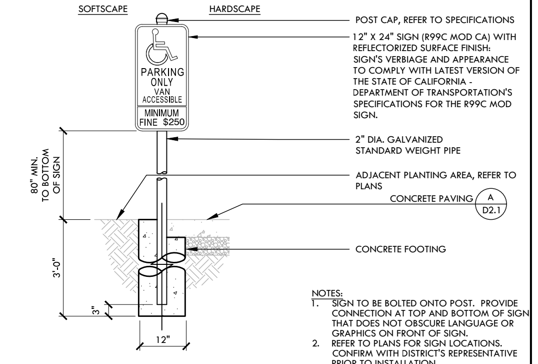
SOFTSCAPE
HARDSCAPE
POST CAP, REFER TO SPECIFICATIONS
PARKING ONLY VAN ACCESSIBLE
MINIMUM FINE $250
12" X 24" SIGN (R99C MOD CA) WITH REFLECTORIZED SURFACE FINISH: SIGN'S VERBIAGE AND APPEARANCE TO COMPLY WITH LATEST VERSION OF THE STATE OF CALIFORNIA - DEPARTMENT OF TRANSPORTATION'S SPECIFICATIONS FOR THE R99C MOD SIGN.
2" DIA. GALVANIZED STANDARD WEIGHT PIPE
80" MIN. TO BOTTOM OF SIGN
ADJACENT PLANTING AREA, REFER TO PLANS
CONCRETE PAVING (A / D2.1)
CONCRETE FOOTING
3'-0"
3"
12"

NOTES:

1. SIGN TO BE BOLTED ONTO POST. PROVIDE CONNECTION AT TOP AND BOTTOM OF SIGN THAT DOES NOT OBSCURE LANGUAGE OR GRAPHICS ON FRONT OF SIGN.
2. REFER TO PLANS FOR SIGN LOCATIONS. CONFIRM WITH DISTRICT'S REPRESENTATIVE PRIOR TO INSTALLATION.

H ACCESSIBLE PARKING SIGN - VAN NTS

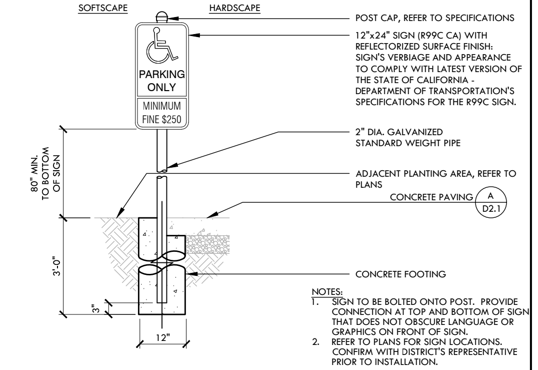
SOFTSCAPE
HARDSCAPE
POST CAP, REFER TO SPECIFICATIONS
PARKING ONLY
MINIMUM FINE $250
12"x24" SIGN (R99C CA) WITH REFLECTORIZED SURFACE FINISH: SIGN'S VERBIAGE AND APPEARANCE TO COMPLY WITH LATEST VERSION OF THE STATE OF CALIFORNIA - DEPARTMENT OF TRANSPORTATION'S SPECIFICATIONS FOR THE R99C SIGN.
2" DIA. GALVANIZED STANDARD WEIGHT PIPE
80" MIN. TO BOTTOM OF SIGN
ADJACENT PLANTING AREA, REFER TO PLANS
CONCRETE PAVING (A / D2.1)
CONCRETE FOOTING
3'-0"
3"
12"

NOTES:

1. SIGN TO BE BOLTED ONTO POST. PROVIDE CONNECTION AT TOP AND BOTTOM OF SIGN THAT DOES NOT OBSCURE LANGUAGE OR GRAPHICS ON FRONT OF SIGN.
2. REFER TO PLANS FOR SIGN LOCATIONS. CONFIRM WITH DISTRICT'S REPRESENTATIVE PRIOR TO INSTALLATION.

G ACCESSIBLE PARKING SIGN NTS

SECTION

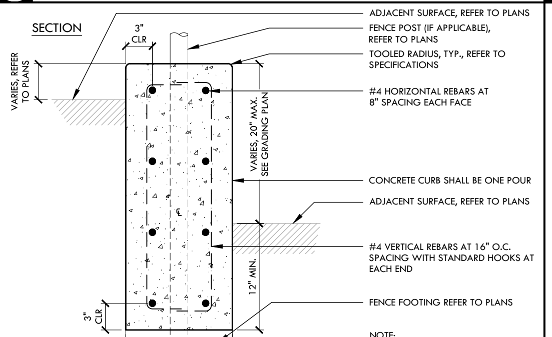
ADJACENT SURFACE, REFER TO PLANS
3" CLR
FENCE POST (IF APPLICABLE), REFER TO PLANS
VARIES, REFER TO PLANS
TOOLED RADIUS, TYP., REFER TO SPECIFICATIONS
#4 HORIZONTAL REBARS AT 8" SPACING EACH FACE
VARIES, 20" MAX. SEE GRADING PLAN
CONCRETE CURB SHALL BE ONE POUR
ADJACENT SURFACE, REFER TO PLANS
#4 VERTICAL REBARS AT 16" O.C. SPACING WITH STANDARD HOOKS AT EACH END
12" MIN.
3" CLR
FENCE FOOTING REFER TO PLANS
12"

NOTE:
REFER TO EDGEBAND AND TALL CURB NOTES, DETAIL A, THIS SHEET FOR ADDITIONAL INFORMATION.

F 12" WIDE TALL CURB WITH FENCE NTS

SECTION

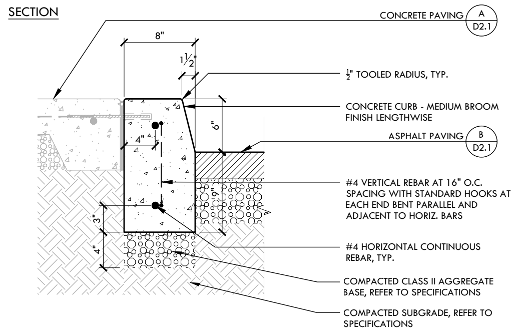
CONCRETE PAVING (A / D2.1)
8"
1½"
½" TOOLED RADIUS, TYP.
CONCRETE CURB - MEDIUM BROOM FINISH LENGTHWISE
6"
ASPHALT PAVING (B / D2.1)
4"
#4 VERTICAL REBAR AT 16" O.C. SPACING WITH STANDARD HOOKS AT EACH END BENT PARALLEL AND ADJACENT TO HORIZ. BARS
6"
3"
#4 HORIZONTAL CONTINUOUS REBAR, TYP.
4"
COMPACTED CLASS II AGGREGATE BASE, REFER TO SPECIFICATIONS
COMPACTED SUBGRADE, REFER TO SPECIFICATIONS

NOTE:
REFER TO EDGEBAND AND TALL CURB NOTES, DETAIL A, THIS SHEET FOR ADDITIONAL INFORMATION.

E 6" CURB AT PARKING LOT NTS

SECTION

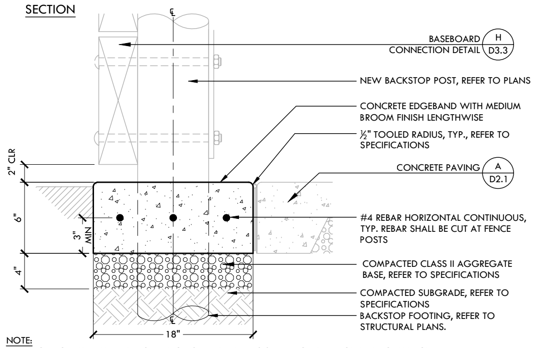
BASEBOARD CONNECTION DETAIL (H / D3.3)
NEW BACKSTOP POST, REFER TO PLANS
CONCRETE EDGEBAND WITH MEDIUM BROOM FINISH LENGTHWISE
½" TOOLED RADIUS, TYP., REFER TO SPECIFICATIONS
CONCRETE PAVING (A / D2.1)
2" CLR
6"
3" MIN
#4 REBAR HORIZONTAL CONTINUOUS, TYP. REBAR SHALL BE CUT AT FENCE POSTS
4"
COMPACTED CLASS II AGGREGATE BASE, REFER TO SPECIFICATIONS
COMPACTED SUBGRADE, REFER TO SPECIFICATIONS
BACKSTOP FOOTING, REFER TO STRUCTURAL PLANS.
18"

NOTE:
REFER TO EDGEBAND AND TALL CURB NOTES, DETAIL A, THIS SHEET, FOR ADDITIONAL INFORMATION

D 18" WIDE BACKSTOP EDGEBAND NTS

SECTION

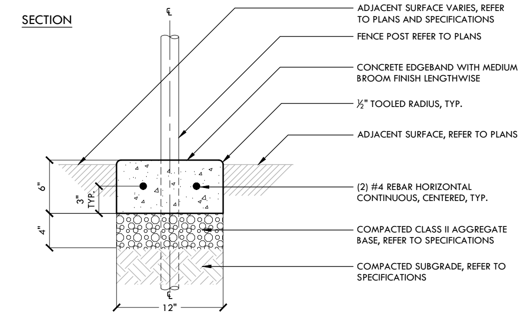
ADJACENT SURFACE VARIES, REFER TO PLANS AND SPECIFICATIONS
FENCE POST REFER TO PLANS
CONCRETE EDGEBAND WITH MEDIUM BROOM FINISH LENGTHWISE
½" TOOLED RADIUS, TYP.
ADJACENT SURFACE, REFER TO PLANS
6"
3" TYP.
(2) #4 REBAR HORIZONTAL CONTINUOUS, CENTERED, TYP.
4"
COMPACTED CLASS II AGGREGATE BASE, REFER TO SPECIFICATIONS
COMPACTED SUBGRADE, REFER TO SPECIFICATIONS
12"

NOTE:

1. REFER TO EDGEBAND AND TALL CURB NOTES, DETAIL A, THIS SHEET FOR ADDITIONAL INFORMATION

C 12" WIDE EDGEBAND WITH FENCE NTS

SECTION

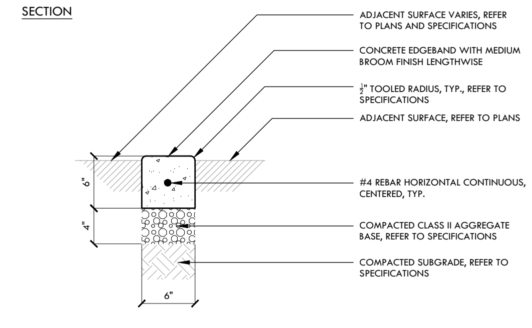
ADJACENT SURFACE VARIES, REFER TO PLANS AND SPECIFICATIONS
CONCRETE EDGEBAND WITH MEDIUM BROOM FINISH LENGTHWISE
½" TOOLED RADIUS, TYP., REFER TO SPECIFICATIONS
ADJACENT SURFACE, REFER TO PLANS
6"
#4 REBAR HORIZONTAL CONTINUOUS, CENTERED, TYP.
4"
COMPACTED CLASS II AGGREGATE BASE, REFER TO SPECIFICATIONS
COMPACTED SUBGRADE, REFER TO SPECIFICATIONS
6"

NOTE:
REFER TO EDGEBAND AND TALL CURB NOTES, DETAIL A, THIS SHEET FOR ADDITIONAL INFORMATION.

B 6" WIDE EDGEBAND NTS

NOTES PERTAIN TO ALL EDGEBAND AND CURB DETAILS:

1. FOR EDGEBANDS AND CURBS WITH FENCING, INSTALL EXPANSION JOINTS AT ALL CORNERS, BEGINNINGS, AND ENDINGS OF RADII, AND AT ALL FENCE POSTS. INSTALL SCORE JOINTS AT 5' O.C. AND OR EVENLY SPACED AND CENTERED BETWEEN POSTS.
2. FOR EDGEBAND AND CURBS WITHOUT FENCING, INSTALL SCORE JOINTS AT 10' O.C. SPACING AND FIBER EXPANSION JOINTS EVERY 20' ON STRAIGHT RUNS. ON CURVED RUNS, FIBER EXPANSION JOINTS SHALL BE SPACED 10' O.C., WITH ALTERNATING SCORE JOINTS AT 5' O.C. SPACING.
3. ALL EXPANSION JOINTS SHALL BE SEALED, PER SPECIFICATIONS.

FINISHES:
EDGEBANDS AND CURBS: MEDIUM BROOM
WALL AND TALL CURBS: MEDIUM SAND BLAST - TOP AND SIDES

A EDGEBAND AND TALL CURB NOTES NTS

IDENTIFICATION STAMP
DIV. OF THE STATE ARCHITECT
APP: 02-123587 INC:
REVIEWED FOR
SS ☑ FLS ☑ ACS ☑
DATE: 01/16/2026

VERDE DESIGN
LANDSCAPE ARCHITECTURE
CIVIL ENGINEERING
SPORT PLANNING & DESIGN
1843 Iron Point Rd. Suite 140
Folsom, CA 95630
tel: 916.415.6554
fax: 916.415.6525
www.VerdeDesignInc.com

STAMP
REGISTERED LANDSCAPE ARCHITECT
MARK S. BAGINSKI
No. 4089
Signature
EXPIRATION DATE: JULY 2027
STATE OF CALIFORNIA

CONSULTANT

KEYMAP

SHEET TITLE
CONSTRUCTION DETAILS - HARDSCAPE

PROJECT NAME
LODI HIGH SCHOOL ATHLETIC FIELD IMPROVEMENTS

PROJECT ADDRESS
3 S PACIFIC AVE
LODI, CA
95242

SUBMITTAL	DATE
50% DSA SUBMITTAL	07/31/25
100% DSA SUBMITTAL	09/25/25
DSA BACKCHECK SUBMITTAL	12/17/25
DSA BACKCHECK SUBMITTAL	01/08/26

NO.	REVISIONS	DATE
△		
△		
△		
△		
△		
△		

DRAWN BY: VDI
CHECKED BY: CS/MB
DATE ISSUED: 01/08/2026
SCALE: AS NOTED
PROJ. NO.: 2502700
SHEET NO.: D2.2

CONSTRUCTION DETAILS - HARDSCAPE

DRAWING NAME: Y:\Projects-FO\2025\2502700 - Lodi HS Baseball and Softball Field\CAD_DTL_HRD.dwg
PLOT DATE: 12-12-25 PLOTTED BY: station23

ALL IDEAS, DESIGNS, ARRANGEMENTS, AND PLANS INDICATED OR REPRESENTED BY THIS DRAWING ARE OWNED BY AND THE PROPERTY OF VERDE DESIGN, INC. AND WERE CREATED, EVOLVED, AND DEVELOPED FOR USE ON AND IN CONNECTION WITH THE SPECIFIED PROJECT. NONE OF SUCH IDEAS, DESIGNS, ARRANGEMENTS OR PLANS SHALL BE USED, REPRODUCED, OR PUBLISHED BY ANY METHOD, IN WHOLE OR IN PART, OR DISCLOSED TO ANY PERSON, FIRM, OR CORPORATION FOR ANY PURPOSE WHATSOEVER WITHOUT WRITTEN PERMISSION OF VERDE DESIGN, INC.

P

O

N

M

L

K

ELEVATION

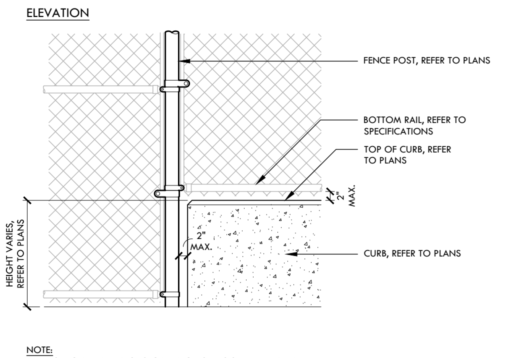
FENCE POST, REFER TO PLANS
BOTTOM RAIL, REFER TO SPECIFICATIONS
TOP OF CURB, REFER TO PLANS
2" MAX.
2" MAX.
HEIGHT VARIES, REFER TO PLANS
CURB, REFER TO PLANS

NOTE:
1. SEE GENERAL FENCE & GATE NOTES THIS SHEET, DETAIL A.

J CHAIN LINK FENCE AT CURB STEP NTS

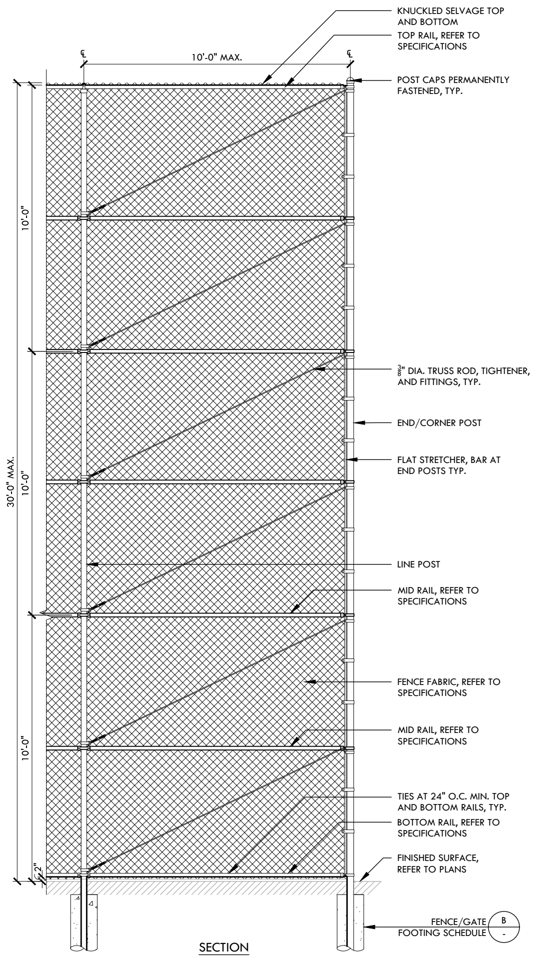
KNUCKLED SELVAGE TOP AND BOTTOM
TOP RAIL, REFER TO SPECIFICATIONS
℄
℄
10'-0" MAX.
POST CAPS PERMANENTLY FASTENED, TYP.
10'-0"
30'-0" MAX.
10'-0"
10'-0"
2"
3/8" DIA. TRUSS ROD, TIGHTENER, AND FITTINGS, TYP.
END/CORNER POST
FLAT STRETCHER, BAR AT END POSTS TYP.
LINE POST
MID RAIL, REFER TO SPECIFICATIONS
FENCE FABRIC, REFER TO SPECIFICATIONS
MID RAIL, REFER TO SPECIFICATIONS
TIES AT 24" O.C. MIN. TOP AND BOTTOM RAILS, TYP.
BOTTOM RAIL, REFER TO SPECIFICATIONS
FINISHED SURFACE, REFER TO PLANS
FENCE/GATE FOOTING SCHEDULE B -
SECTION

NOTE:
1. SEE GENERAL FENCE & GATE NOTES THIS SHEET, DETAIL A.

I 30'-0" TALL CHAIN LINK BACKSTOP NTS

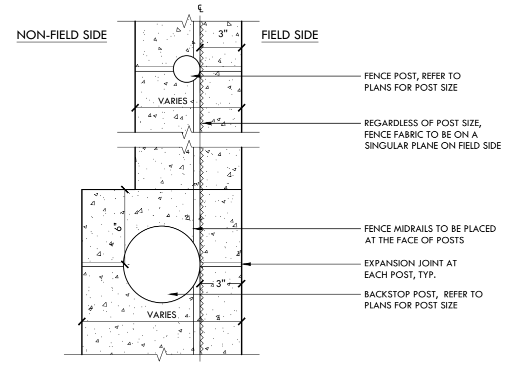
NON-FIELD SIDE
FIELD SIDE
℄
3"
VARIES
6"
3"
VARIES
FENCE POST, REFER TO PLANS FOR POST SIZE
REGARDLESS OF POST SIZE, FENCE FABRIC TO BE ON A SINGULAR PLANE ON FIELD SIDE
FENCE MIDRAILS TO BE PLACED AT THE FACE OF POSTS
EXPANSION JOINT AT EACH POST, TYP.
BACKSTOP POST, REFER TO PLANS FOR POST SIZE

H FENCE POST ALIGNMENT - PLAN VIEW NTS

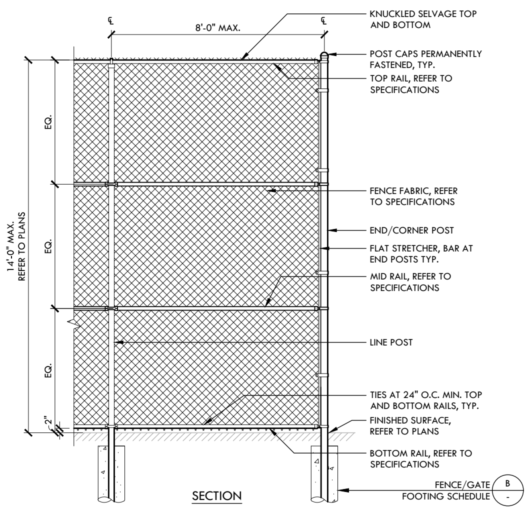
℄
℄
8'-0" MAX.
KNUCKLED SELVAGE TOP AND BOTTOM
POST CAPS PERMANENTLY FASTENED, TYP.
TOP RAIL, REFER TO SPECIFICATIONS
14'-0" MAX. REFER TO PLANS
EQ.
EQ.
EQ.
2"
FENCE FABRIC, REFER TO SPECIFICATIONS
END/CORNER POST
FLAT STRETCHER, BAR AT END POSTS TYP.
MID RAIL, REFER TO SPECIFICATIONS
LINE POST
TIES AT 24" O.C. MIN. TOP AND BOTTOM RAILS, TYP.
FINISHED SURFACE, REFER TO PLANS
BOTTOM RAIL, REFER TO SPECIFICATIONS
FENCE/GATE FOOTING SCHEDULE B -
SECTION

NOTE:
1. SEE GENERAL FENCE & GATE NOTES THIS SHEET, DETAIL A.

G 14'-0" TALL CHAIN LINK FENCE NTS

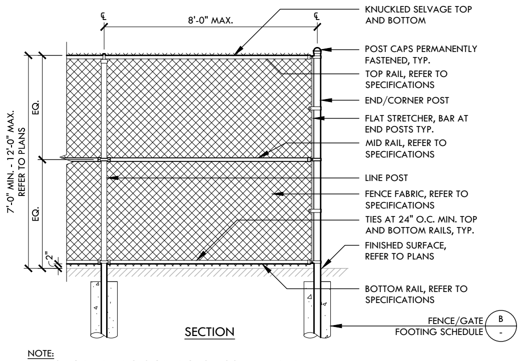
℄
℄
8'-0" MAX.
KNUCKLED SELVAGE TOP AND BOTTOM
POST CAPS PERMANENTLY FASTENED, TYP.
TOP RAIL, REFER TO SPECIFICATIONS
END/CORNER POST
FLAT STRETCHER, BAR AT END POSTS TYP.
MID RAIL, REFER TO SPECIFICATIONS
LINE POST
FENCE FABRIC, REFER TO SPECIFICATIONS
TIES AT 24" O.C. MIN. TOP AND BOTTOM RAILS, TYP.
FINISHED SURFACE, REFER TO PLANS
BOTTOM RAIL, REFER TO SPECIFICATIONS
7'-0" MIN. - 12'-0" MAX. REFER TO PLANS
EQ.
EQ.
2"
FENCE/GATE FOOTING SCHEDULE B -
SECTION

NOTE:
1. SEE GENERAL FENCE & GATE NOTES THIS SHEET, DETAIL A.

F 7'-0" - 12'-0" TALL CHAIN LINK FENCE NTS

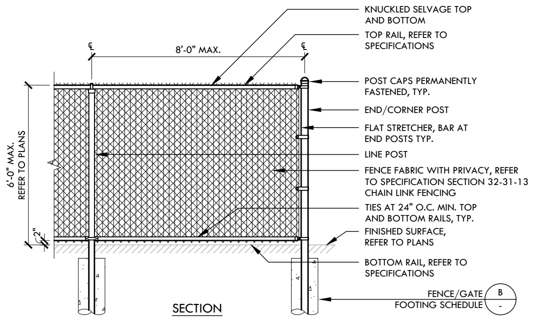
KNUCKLED SELVAGE TOP AND BOTTOM
TOP RAIL, REFER TO SPECIFICATIONS
℄
℄
8'-0" MAX.
POST CAPS PERMANENTLY FASTENED, TYP.
END/CORNER POST
FLAT STRETCHER, BAR AT END POSTS TYP.
LINE POST
FENCE FABRIC WITH PRIVACY, REFER TO SPECIFICATION SECTION 32-31-13 CHAIN LINK FENCING
TIES AT 24" O.C. MIN. TOP AND BOTTOM RAILS, TYP.
FINISHED SURFACE, REFER TO PLANS
BOTTOM RAIL, REFER TO SPECIFICATIONS
6'-0" MAX. REFER TO PLANS
2"
FENCE/GATE FOOTING SCHEDULE B -
SECTION

NOTE:
1. SEE GENERAL FENCE & GATE NOTES THIS SHEET, DETAIL A.

E 6'-0" TALL CHAIN LINK FENCE WITH SLATS NTS

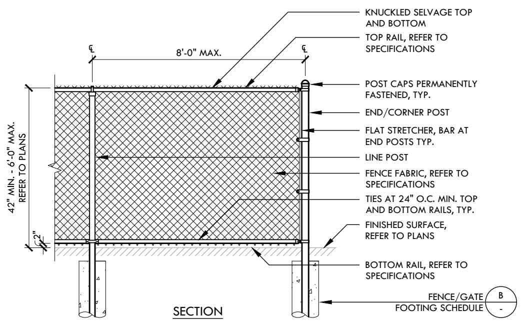
KNUCKLED SELVAGE TOP AND BOTTOM
TOP RAIL, REFER TO SPECIFICATIONS
℄
℄
8'-0" MAX.
POST CAPS PERMANENTLY FASTENED, TYP.
END/CORNER POST
FLAT STRETCHER, BAR AT END POSTS TYP.
LINE POST
FENCE FABRIC, REFER TO SPECIFICATIONS
TIES AT 24" O.C. MIN. TOP AND BOTTOM RAILS, TYP.
FINISHED SURFACE, REFER TO PLANS
BOTTOM RAIL, REFER TO SPECIFICATIONS
42" MIN. - 6'-0" MAX. REFER TO PLANS
2"
FENCE/GATE FOOTING SCHEDULE B -
SECTION

NOTE:
1. SEE GENERAL FENCE & GATE NOTES THIS SHEET, DETAIL A.

D 42" - 6'-0" TALL CHAIN LINK FENCE NTS

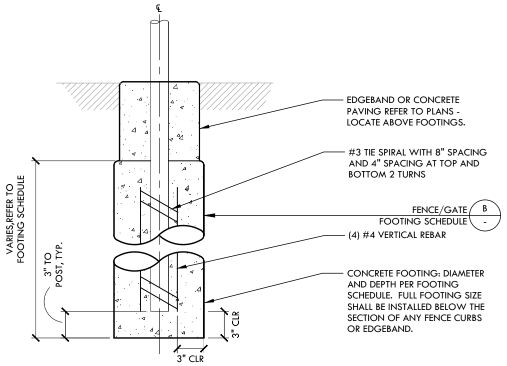
℄
EDGEBAND OR CONCRETE PAVING REFER TO PLANS - LOCATE ABOVE FOOTINGS.
#3 TIE SPIRAL WITH 8" SPACING AND 4" SPACING AT TOP AND BOTTOM 2 TURNS
FENCE/GATE FOOTING SCHEDULE B -
(4) #4 VERTICAL REBAR
CONCRETE FOOTING: DIAMETER AND DEPTH PER FOOTING SCHEDULE. FULL FOOTING SIZE SHALL BE INSTALLED BELOW THE SECTION OF ANY FENCE CURBS OR EDGEBAND.
VARIES,REFER TO FOOTING SCHEDULE
3" TO POST, TYP.
3" CLR
3" CLR

C FENCE FOOTING NTS

FENCE POST & FOOTING SCHEDULE

DESCRIPTION	HEIGHT	LINE POST (STD. GALV. PIPE)	CORNER/END POST (STD. GALV. PIPE)	FOOTING DIMENSIONS	VERTICAL REBAR
CHAIN LINK FENCE	42"	2 ½" DIA. STD.	3" DIA. STD.	16" DIA. X 3'-6" DEEP	-
CHAIN LINK FENCE	6'	2 ½" DIA. STD.	3" DIA. STD.	16" DIA. X 3'-6" DEEP	-
CHAIN LINK FENCE WITH SLATS	6'	3 ½" DIA. STD.	4" DIA. STD.	16" DIA. X 5'-0" DEEP	-
CHAIN LINK FENCE	7'	2 ½" DIA. STD.	3" DIA. STD.	16" DIA. X 3'-6" DEEP	-
CHAIN LINK FENCE	10'	3" DIA. STD	3 ½" DIA. STD	18" DIA. X 4'-0" DEEP	(4) #5
CHAIN LINK FENCE	12'	3 ½" DIA. STD	4" DIA. STD	18" DIA. X 4'-6" DEEP	(4) #5
CHAIN LINK FENCE	14'	REFER TO STRUCTURAL DRAWINGS			
30' TALL CHAIN LINK FENCE BACKSTOP	30'	REFER TO STRUCTURAL DRAWINGS			
FOUL POLE AT BASEBALL	30'	REFER TO STRUCTURAL DRAWINGS			
FOUL POLE AT SOFTBALL	20'	REFER TO STRUCTURAL DRAWINGS			
SAFETY NETTING	20'	REFER TO STRUCTURAL DRAWINGS			

GATE POST FOOTING SCHEDULE

DESCRIPTION	SIZE (H x L)	GATE POST (STD. GALV. PIPE)	FOOTING DIMENSIONS	VERTICAL REBAR	GATE HARDWARE DETAIL REFERENCE	HARDWARE GROUP
CHAIN LINK SINGLE SWING GATE WITH PANIC HARDWARE	6' X 4'	3" DIA. STD.	16" DIA. X 3'-6" DEEP	-	G, H SHEET D3.2	1
CHAIN LINK SINGLE SWING GATE WITH PANIC HARDWARE	7' X 4'	3" DIA. STD.	16" DIA. X 3'-6" DEEP	-	G, H SHEET D3.2	1
CHAIN LINK SINGLE SWING GATE WITH TRANSOM & PANIC HARDWARE	7' X 4'	3" DIA. STD.	16" DIA. X 3'-6" DEEP	-	G, H SHEET D3.2	1
CHAIN LINK DOUBLE SWING GATE WITH TRANSOM & PANIC HARDWARE	7' X 8'	3" DIA. STD.	16" DIA. X 4'-0" DEEP	-	G, H SHEET D3.2	1
CHAIN LINK DOUBLE SWING GATE	6' X 12'	3" DIA. STD.	16" DIA. X 4'-0" DEEP	-	I, J SHEET D3.2	2
CHAIN LINK DOUBLE SWING GATE WITH TRANSOM	7' X 12'	3" DIA. STD.	16" DIA. X 4'-0" DEEP	-	I, J SHEET D3.2	2
CHAIN LINK DOUBLE SWING GATE	6' X 24'	3" DIA. STD.	16" DIA. X 5'-0" DEEP	-	I, J SHEET D3.2	2

HARDWARE GROUP:
1. SELF-CLOSING HINGES; PANIC HARDWARE
2. SWING HINGES; GATE LATCH HARDWARE

NOTES:
1. POSTS LISTED FOR GATES SHOULD BE END POST SIZES MIN. TYP.
2. REFER TO PLANS & DETAILS FOR POST LOCATION AND TOP OF POST FOOTING.
3. REFER TO FENCE FOOTING DETAIL, DETAIL C, THIS SHEET.

B FENCE AND GATE FOOTING SCHEDULE NTS

NOTES PERTAIN TO ALL GATE AND FENCE DETAILS:

1. BOTTOM RAIL TO BE 2" FROM FINISH GRADE, FENCE FABRIC BOTTOM EDGE TO BE 1" FROM FINISH GRADE.
2. SUBMIT SHOP DRAWINGS FOR ACCEPTANCE BY DISTRICT'S REPRESENTATIVE PRIOR TO INSTALLATION.
3. GATES IN ACCESSIBLE PATH OF TRAVEL MUST MEET ENTRY AND EXIT DOOR REQUIREMENTS.
4. ALL PEDESTRIAN AND DOUBLE SWING GATES ARE TO HAVE CITY OF LODI FIRE DEPARTMENT APPROVED KNOX BOX ADDED TO THE OUTER GATE POST. THE KNOX BOX IS TO BE MOUNTED 48" MINIMUM FROM FINISHED SURFACE.
5. TACK WELD HINGES TO POSTS AT GATES.
6. GATE POSTS SHALL BE OFFSET FROM THE FENCE TO ALLOW SWING GATES TO OPEN A FULL 180° BACK AGAINST THE FENCE PER PLAN LAYOUT.
7. FOR GATES WITH DROP BAR, PROVIDE 8" DEEP FOOTING WITH SCH. 40 STEEL PIPE SLEEVE. CANE STOP TO GO DOWN 4" INTO CONCRETE IN CLOSED POSITION AND OPEN POSITION.
8. THE PIPE SIZES INDICATED ARE NPS FOR: STANDARD PIPE SCHEDULE 40.
9. FOR BASEBALL AND SOFTBALL FIELDS: PLACE FENCE FABRIC ON FIELD SIDE.
10. FOR POST FOOTING AND CALCULATIONS, SEE STRUCTURAL SHEETS AND CALCULATIONS.

A FENCE AND GATES NOTES NTS

IDENTIFICATION STAMP
DIV. OF THE STATE ARCHITECT
APP: 02-123587 INC:
REVIEWED FOR
SS ☑ FLS ☑ ACS ☑
DATE: 01/16/2026

VERDE DESIGN
LANDSCAPE ARCHITECTURE
CIVIL ENGINEERING
SPORT PLANNING & DESIGN
1843 Iron Point Rd. Suite 140
Folsom, CA 95630
tel: 916.415.6554
fax: 916.415.6525
www.VerdeDesigninc.com

STAMP
REGISTERED LANDSCAPE ARCHITECT
MARK S. BAGINSKI
No. 4089
EXPIRATION DATE: JULY 2027
STATE OF CALIFORNIA

CONSULTANT

KEYMAP

SHEET TITLE
FENCING
DETAILS

PROJECT NAME
LODI HIGH SCHOOL
ATHLETIC FIELD
IMPROVEMENTS

PROJECT ADDRESS
3 S PACIFIC AVE
LODI, CA
95242

SUBMITTAL	DATE
50% DSA SUBMITTAL	07/31/25
100% DSA SUBMITTAL	09/25/25
DSA BACKCHECK SUBMITTAL	12/17/25
DSA BACKCHECK SUBMITTAL	01/08/26

NO.	REVISIONS	DATE
△		
△		
△		
△		
△		
△		

DRAWN BY: VDI
CHECKED BY: CS/MB
DATE ISSUED: 01/08/2026
SCALE: AS NOTED
PROJ. NO.: 2502700
SHEET NO.: D3.1

DRAWING NAME: Y:\Projects-FO\2025\2502700 - Lodi HS Baseball and Softball Field\CAD_DTL_FNC.dwg
PLOT DATE: 12-11-25 PLOTTED BY: station9

T

S

R

Q

P

O

N

M

L

K

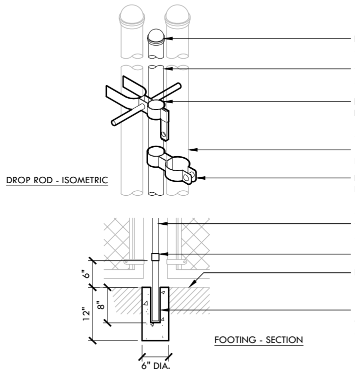

DROP ROD POST CAP, REFER TO SPECIFICATIONS

$1\frac{3}{8}$" HEAVY DROP ROD, REFER TO SPECIFICATIONS

INDUSTRIAL FORK WITH PADLOCK INSERT - WELDED TO DROP ROD AT 36" ABOVE FINISH SURFACE. REFER TO SPECIFICATIONS

ADJACENT GATE FRAME, REFER TO PLANS

DROP ROD GUIDE BOLTED TO GATE FRAME. INSTALL BELOW FORK AND ABOVE "STOPPER". REFER TO SPECIFICATIONS

$1\frac{3}{8}$" HEAVY DROP ROD, REFER TO SPECIFICATIONS

$1\frac{5}{8}$" "STOPPER", WELDED TO DROP ROD.

FINISHED SURFACE, REFER TO PLANS.

2" DIAMETER GROUND SLEEVE. TOP OF SLEEVE TO BE FLUSH WITH FINISH SURFACE.

J GATE - DROP ROD NTS

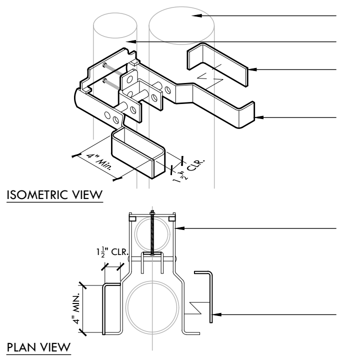

RECEIVING FENCE POST, REFER TO PLANS

GATE FRAME, REFER TO SPECIFICATIONS

PROVIDE AND WELD HANDLE ON BOTH SIDES OF MOUNT LEVER AND PAINT WELDS WITH ZINC GALVANIZE COATING.

FULCRUM GATE LATCH (MODEL: CL-FULCRUM-SNG) AT HOOVER FENCE CO. (HTTPS://WWW.HOOVERFENCE.COM/CHAIN-LINK-FULCRUM-LATCH). INSTALL PER MANUFACTURER'S RECOMMENDATIONS & TACK WELD TO GATE POST. CONTRACTOR TO SIZE LATCH WITH RECEIVING FENCE POST SIZE.

FULCRUM GATE LATCH (MODEL: CL-FULCRUM-SNG) AT HOOVER FENCE CO. (800-355-2335). INSTALL PER MANUFACTURER'S RECOMMENDATIONS AND TACK WELD TO GATE POST. CONTRACTOR TO SIZE LATCH WITH RECEIVING FENCE POST SIZE.

PROVIDE AND WELD HANDLE ON BOTH SIDES OF MOUNT LEVER AND PAINT WELDS WITH ZINC GALVANIZE COATING.

I GATE LATCH - CHAIN LINK NTS

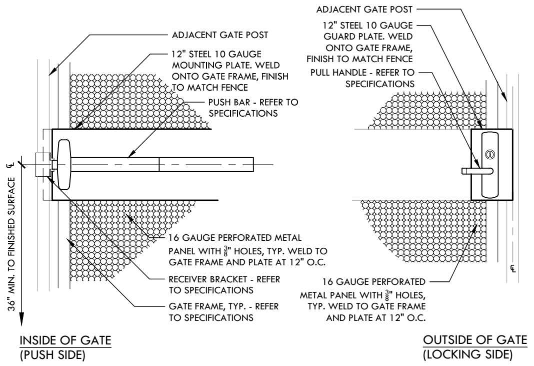

ADJACENT GATE POST

12" STEEL 10 GAUGE MOUNTING PLATE. WELD ONTO GATE FRAME, FINISH TO MATCH FENCE

PUSH BAR - REFER TO SPECIFICATIONS

16 GAUGE PERFORATED METAL PANEL WITH $\frac{3}{8}$" HOLES, TYP. WELD TO GATE FRAME AND PLATE AT 12" O.C.

RECEIVER BRACKET - REFER TO SPECIFICATIONS

GATE FRAME, TYP. - REFER TO SPECIFICATIONS

ADJACENT GATE POST

12" STEEL 10 GAUGE GUARD PLATE. WELD ONTO GATE FRAME, FINISH TO MATCH FENCE

PULL HANDLE - REFER TO SPECIFICATIONS

16 GAUGE PERFORATED METAL PANEL WITH $\frac{3}{8}$" HOLES, TYP. WELD TO GATE FRAME AND PLATE AT 12" O.C.

H ACCESSIBLE PANIC BAR AND LEVER - CHAIN LINK FENCE NTS

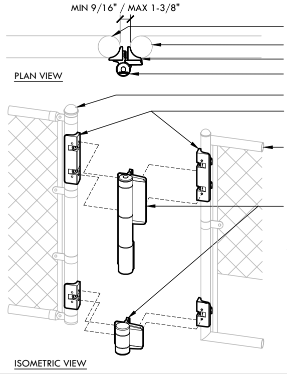

RECEIVING FENCE POST, REFER TO PLANS

RECEIVING GATE FRAME, REFER TO SPECIFICATIONS

CHAIN LINK BRACKET ADAPTER

SELF-CLOSING GATE HINGE

RECEIVING FENCE POST, REFER TO PLANS

CHAIN LINK BRACKET ADAPTER (MODEL: LOCINOX CLB-MAMMOTH, SEE NOTES), TYP. INSTALL PER MANUFACTURER'S RECOMMENDATIONS.

RECEIVING GATE FRAME, REFER TO SPECIFICATIONS

SELF-CLOSING GATE HINGE, TOP AND BOTTOM (MODEL: LOCINOX MAMMOTH, SEE NOTES). INSTALL PER MANUFACTURER'S RECOMMENDATIONS.

NOTES:

1. SELF CLOSING GATE HINGE FOR GATES UP TO 330 LBS. AND 5' WIDE SHALL BE MAMMOTH-180.
2. SELF CLOSING GATE HINGE FOR GATES UP TO 440 LBS. AND 6.5' WIDE SHALL BE MAMMOTH-HD.
3. CHAIN LINK BRACKET ADAPTER SHALL BE MAMMOTH-CLB, FOR POSTS UP TO 4" DIAMETER.
4. FOR POSTS LARGER THAN 4" DIAMETER, CONTRACTOR SHALL SPOT-WELD ANGLE IRON TO POST, SIZED APPROPRIATELY TO MOUNT HINGES.
5. MOUNTING HARDWARE FOR LOCINOX PRODUCTS PROVIDED BY MANUFACTURER.

G SELF-CLOSING HINGES AT CHAIN LINK GATE NTS

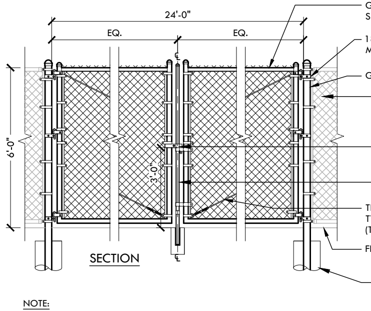

GATE FRAME, TYP. REFER TO SPECIFICATIONS

180° SWING HINGES TOP, MIDDLE, AND BOTTOM, TYP.

GATE POST, TYP.

42" - 6'-0" TALL CHAIN LINK FENCE (D / D3.1)

GATE LATCH CHAIN LINK (I / -)

GATE DROP ROD (J / -)

TRUSS ROD TIGHTENER AND FITTINGS, TYP. INSTALLED ON 10'-0" WIDE GATES (TOTAL WIDTH) OR LARGER

FINISH SURFACE, REFER TO PLANS

FENCE/GATE FOOTING SCHEDULE (B / D3.1)

NOTE:

1. REFER TO GENERAL FENCE & GATE NOTES, DETAIL A, SHEET D3.1.

F 6' TALL X 24' WIDE DOUBLE SWING GATE NTS

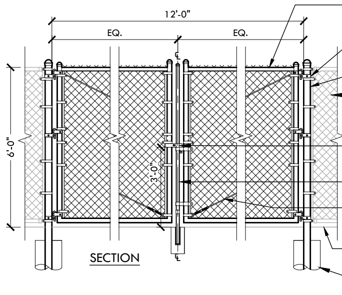

GATE FRAME, TYP. REFER TO SPECIFICATIONS

180° SWING HINGES TOP, MIDDLE, AND BOTTOM, TYP.

GATE POST, TYP.

42" - 6'-0" TALL CHAIN LINK FENCE (D / D3.1)

GATE LATCH CHAIN LINK (I / -)

GATE DROP ROD (J / -)

TRUSS ROD TIGHTENER AND FITTINGS, TYP. INSTALLED ON 10'-0" WIDE GATES (TOTAL WIDTH) OR LARGER

FINISH SURFACE, REFER TO PLANS

FENCE/GATE FOOTING SCHEDULE (B / D3.1)

NOTE:

1. REFER TO GENERAL FENCE & GATE NOTES, DETAIL A, SHEET D3.1.

E 6' TALL X 12' WIDE DOUBLE SWING GATE NTS

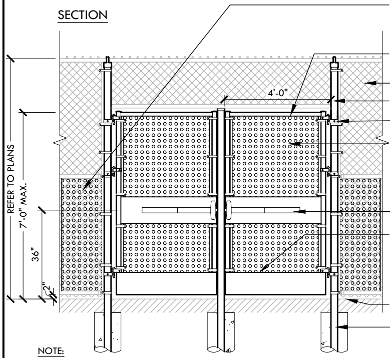

EXTEND PERFORATED PANELS 18" BEYOND GATE POSTS, TYP. PERFORATED PANELS TO HAVE FINISHED EDGE.

GATE FRAME, TYP. REFER TO SPECIFICATIONS

7'-0" - 12'-0" TALL CHAIN LINK FENCE (F / D3.1)

GATE POST

SELF-CLOSING HINGES AT CHAIN LINK GATE (G / -)

24 GAUGE PERFORATED METAL PANEL WITH $\frac{3}{32}$" HOLES AT $\frac{3}{16}$" STAGGERED CENTERS, TYP. WELD TO FRAME, BOTH SIDES OF GATE (TYP). REFER TO SPECIFICATIONS

ACCESSIBLE PANIC BAR AND LEVER - CHAIN LINK FENCE (H / -)

10" KICK PLATE FLUSH WITH FRAME ON SIDE OF PUSH EXIT DOORS. KICK PLATES SHALL BE FIELD WELDED ONTO BOTH SIDES OF GATE FRAME, NON-STRUCTURAL WELD.

FINISH SURFACE, REFER TO PLANS

FENCE/GATE FOOTING SCHEDULE (B / D3.1)

NOTE:

1. REFER TO GENERAL FENCE & GATE NOTES, DETAIL A, SHEET D3.1.

D 7' TALL X 8' WIDE DOUBLE SWING GATE WITH TRANSOM & PANIC HARDWARE NTS

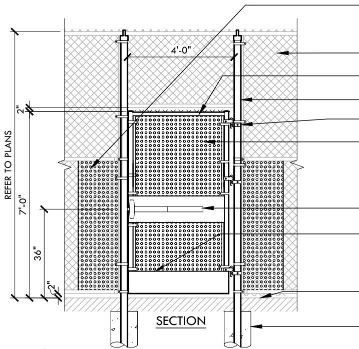

EXTEND PERFORATED PANELS 18" BEYOND GATE POSTS, TYP. PERFORATED PANELS TO HAVE FINISHED EDGE.

7'-0" - 12'-0" TALL CHAIN LINK FENCE (F / D3.1)

GATE FRAME, TYP. REFER TO SPECIFICATIONS

GATE POST

SELF-CLOSING HINGES AT CHAIN LINK GATE (G / -)

24 GAUGE PERFORATED METAL PANEL WITH $\frac{3}{32}$" HOLES AT $\frac{3}{16}$" STAGGERED CENTERS, TYP. WELD TO FRAME, BOTH SIDES OF GATE (TYP). REFER TO SPECIFICATIONS

ACCESSIBLE PANIC BAR AND LEVER - CHAIN LINK FENCE (H / -)

10" KICK PLATE FLUSH WITH FRAME ON SIDE OF PUSH EXIT DOORS. KICK PLATES SHALL BE FIELD WELDED ONTO BOTH SIDES OF GATE FRAME, NON-STRUCTURAL WELD.

FINISH SURFACE, REFER TO PLANS

FENCE/GATE FOOTING SCHEDULE (B / D3.1)

NOTE:

1. REFER TO GENERAL FENCE & GATE NOTES, DETAIL A, SHEET D3.1.

C 7' TALL x 4' WIDE SWING GATE WITH TRANSOM & PANIC HARDWARE NTS

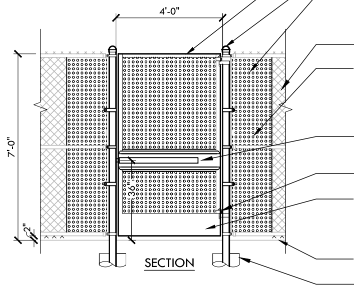

GATE FRAME, TYP. REFER TO SPECIFICATIONS

GATE POST

EXTEND PERFORATED PANELS 18" BEYOND GATE POSTS, TYP. PERFORATED PANELS TO HAVE FINISHED EDGE.

7'-0" - 12'-0" TALL CHAIN LINK FENCE (F / D3.1)

24 GAUGE PERFORATED METAL PANEL WITH $\frac{3}{32}$" HOLES AT $\frac{3}{16}$" STAGGERED CENTERS, TYP. WELD TO FRAME, BOTH SIDES OF GATE (TYP). REFER TO SPECIFICATIONS

ACCESSIBLE PANIC BAR AND LEVER - CHAIN LINK FENCE (H / -)

SELF-CLOSING HINGES AT CHAIN LINK GATE (G / -)

10" KICK PLATE FLUSH WITH FRAME ON SIDE OF PUSH EXIT DOORS. KICK PLATES SHALL BE FIELD WELDED ONTO BOTH SIDES OF GATE FRAME, NON-STRUCTURAL WELD.

FINISH SURFACE, REFER TO PLANS

FENCE/GATE FOOTING SCHEDULE (B / D3.1)

NOTE:

1. REFER TO GENERAL FENCE & GATE NOTES, DETAIL A, SHEET D3.1.

B 7' TALL x 4' WIDE SWING GATE WITH PANIC HARDWARE NTS

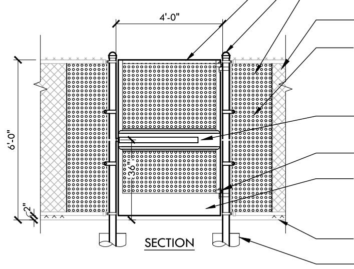

GATE FRAME, TYP. REFER TO SPECIFICATIONS

GATE POST

EXTEND PERFORATED PANELS 18" BEYOND GATE POSTS, TYP. PERFORATED PANELS TO HAVE FINISHED EDGE.

42" - 6'-0" TALL CHAIN LINK FENCE (D / D3.1)

24 GAUGE PERFORATED METAL PANEL WITH $\frac{3}{32}$" HOLES AT $\frac{3}{16}$" STAGGERED CENTERS, TYP. WELD TO FRAME, BOTH SIDES OF GATE (TYP). REFER TO SPECIFICATIONS

ACCESSIBLE PANIC BAR AND LEVER - CHAIN LINK FENCE (H / -)

SELF-CLOSING HINGES AT CHAIN LINK GATE (G / -)

10" KICK PLATE FLUSH WITH FRAME ON SIDE OF PUSH EXIT DOORS. KICK PLATES SHALL BE FIELD WELDED ONTO BOTH SIDES OF GATE FRAME, NON-STRUCTURAL WELD.

FINISH SURFACE, REFER TO PLANS

FENCE/GATE FOOTING SCHEDULE (B / D3.1)

NOTE:

1. REFER TO GENERAL FENCE & GATE NOTES, DETAIL A, SHEET D3.1.

A 6' TALL x 4' WIDE SWING GATE WITH PANIC HARDWARE NTS

IDENTIFICATION STAMP
DIV. OF THE STATE ARCHITECT
APP: 02-123587 INC:
REVIEWED FOR
SS ☑ FLS ☑ ACS ☑
DATE: 01/16/2026

VERDE DESIGN
LANDSCAPE ARCHITECTURE
CIVIL ENGINEERING
SPORT PLANNING & DESIGN
1843 Iron Point Rd. Suite 140
Folsom, CA 95630
tel: 916.415.6554
fax: 916.415.6525
www.VerdeDesignInc.com

STAMP

REGISTERED LANDSCAPE ARCHITECT
MARK S. BAGINSKI
No. 4089
Signature
EXPIRATION DATE: JULY 2027
STATE OF CALIFORNIA

CONSULTANT

KEYMAP

SHEET TITLE

FENCING
DETAILS

PROJECT NAME

LODI HIGH SCHOOL
ATHLETIC FIELD
IMPROVEMENTS

PROJECT ADDRESS

3 S PACIFIC AVE
LODI, CA
95242

SUBMITTAL	DATE
50% DSA SUBMITTAL	07/31/25
100% DSA SUBMITTAL	09/25/25
DSA BACKCHECK SUBMITTAL	12/17/25
DSA BACKCHECK SUBMITTAL	01/08/26

NO.	REVISIONS	DATE
△		
△		
△		
△		
△		
△		

DRAWN BY: VDI
CHECKED BY: CS/MB
DATE ISSUED: 01/08/2026
SCALE: AS NOTED
PROJ. NO.: 2502700
SHEET NO.: D3.2

FENCING DETAILS

ALL IDEAS, DESIGNS, ARRANGEMENTS, AND PLANS INDICATED OR REPRESENTED BY THIS DRAWING ARE OWNED BY AND THE PROPERTY OF VERDE DESIGN, INC. AND WERE CREATED, EVOLVED, AND DEVELOPED FOR USE ON AND IN CONNECTION WITH THE SPECIFIED PROJECT. NONE OF SUCH IDEAS, DESIGNS, ARRANGEMENTS OR PLANS SHALL BE USED, REPRODUCED, OR PUBLISHED BY ANY METHOD, IN WHOLE OR IN PART, OR DISCLOSED TO ANY PERSON, FIRM, OR CORPORATION FOR ANY PURPOSE WHATSOEVER WITHOUT WRITTEN PERMISSION OF VERDE DESIGN, INC.

DRAWING NAME: Y:\Projects-FO\2025\2502700 - Lodi HS Baseball and Softball Field\CAD_DTL_FNC.dwg
PLOT DATE: 12-11-25 PLOTTED BY: station9

ALL IDEAS, DESIGNS, ARRANGEMENTS, AND PLANS INDICATED OR REPRESENTED BY THIS DRAWING ARE OWNED BY AND THE PROPERTY OF VERDE DESIGN, INC. AND WERE CREATED, EVOLVED, AND DEVELOPED FOR USE ON AND IN CONNECTION WITH THE SPECIFIED PROJECT. NONE OF SUCH IDEAS, DESIGNS, ARRANGEMENTS OR PLANS SHALL BE USED, REPRODUCED, OR PUBLISHED BY ANY METHOD, IN WHOLE OR IN PART, OR DISCLOSED TO ANY PERSON, FIRM, OR CORPORATION FOR ANY PURPOSE WHATSOEVER WITHOUT WRITTEN PERMISSION OF VERDE DESIGN, INC.

J

G

NOT USED

E

NOT USED

C

NOT USED

I

F

NOT USED

D

NOT USED

B

NOT USED

PLAN ENLARGEMENT

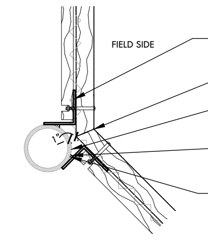

GALVANIZED STEEL PLATE $\frac{1}{4}$" THICK, 6" WIDE, 90° ANGLE AND FULL HEIGHT OF BOARDS AS REQUIRED.

MITER CUTS, TYP. PROVIDE PAINT AT CUTS.

END, CORNER, LINE, BASEBOARD POST, REFER TO PLANS AND SPECIFICATIONS

ANGLE TO POST STAGRD. 6"

FIELD WELD GALVANIZED STEEL PLATE $\frac{1}{4}$" THICK, 6" WIDE, 90° ANGLE AND FULL HEIGHT OF BOARDS AS REQUIRED. GRIND ALL SHARP EDGES AND CORNERS, SMOOTH. SPRAY WELDS AND AFFECTED AREAS OF POST AND ANGLE WITH HIGH ZINC DUST -CONTENT PAINT AFTER WELDING, TYP.

PLAN ENLARGEMENT

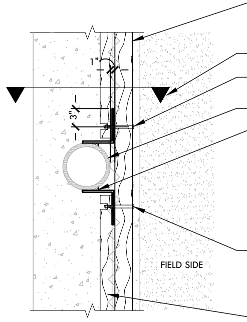

3"x12" S4S DOUGLAS FIR SELECT, TO BE PAINTED GREEN, TYP. ON ALL FACES, ENDS AND RECESSES FOR BOLTS

18' WIDE BACKSTOP EDGEBAND D / D2.2

SPACE BOLTS 2'-0" O.C. ON 2"x6" PLANK ONLY.

BACKSTOP POST, REFER TO PLANS

FIELD WELD GALVANIZED STEEL PLATE $\frac{1}{4}$" THICK, 6" WIDE, 90° ANGLE AND FULL HEIGHT OF BOARDS AS REQUIRED. GRIND ALL SHARP EDGES AND CORNERS, SMOOTH. SPRAY WELDS AND AFFECTED AREAS OF POST AND ANGLE WITH HIGH ZINC DUST -CONTENT PAINT AFTER WELDING, TYP.

GALVANIZED STEEL CARRIAGE BOLT $\frac{3}{8}$" DIAMETER WASHER AND NUT. RECESS NUTS AND CUT OFF PROTRUDING BOLT AND TRIM ENDS FLUSH TO FACE OF WOOD, GRIND SMOOTH.

2"x6" S4S DOUGLAS FIR SELECT, TO BE PAINTED GREEN, TYP. ON ALL FACES, ENDS AND RECESSES FOR BOLTS

ISOMETRIC

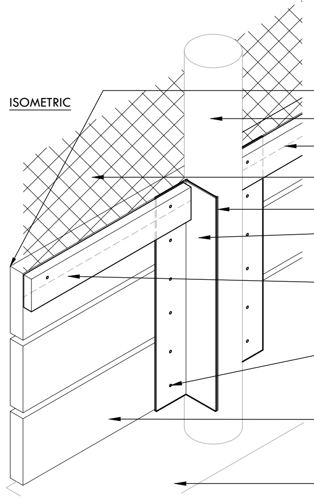

EASE ALL EDGES AND ENDS PRIOR TO PAINTING

BACKSTOP POST, REFER TO PLANS AND SPECIFICATIONS

CHAIN LINK FABRIC TO EXTEND 4" BELOW TOP OF BASEBOARD

CHAIN LINK FENCE FABRIC, REFER TO SPECIFICATIONS

PLATE TO HAVE CONTINUOUS WELD TO POST.

$\frac{1}{4}$"x6" GALVANIZED STEEL PLATE, 90° ANGLE TO EXTEND FULL HEIGHT OF BOARDS. BOARDS TO STOP 1" ABOVE FINISHED SURFACE.

2"x6" S4S DOUGLAS FIR SELECT, TO BE PAINTED GREEN, TYP. ON ALL FACES, ENDS AND RECESSES FOR BOLTS EDGE BOARD TO BE BOLTED TO TOP BASEBOARD. BOLTS SPACED 1' O.C., TYP.

GALVANIZED. STEEL CARRIAGE BOLT $\frac{3}{8}$" DIAMETER WASHER AND NUT. TWO (2) PER BOARD, TYP. PAINT ALL BOLTS AND NUTS.

3"x12" S4S DOUGLAS FIR SELECT, TO BE PAINTED GREEN, TYP. ON ALL FACES, ENDS AND RECESSES FOR BOLTS. BOARDS TO STOP 1" ABOVE FINISHED SURFACE.

18' WIDE BACKSTOP EDGEBAND D / D2.2

H BASEBOARD CONNECTION DETAIL NTS

PLAN VIEW

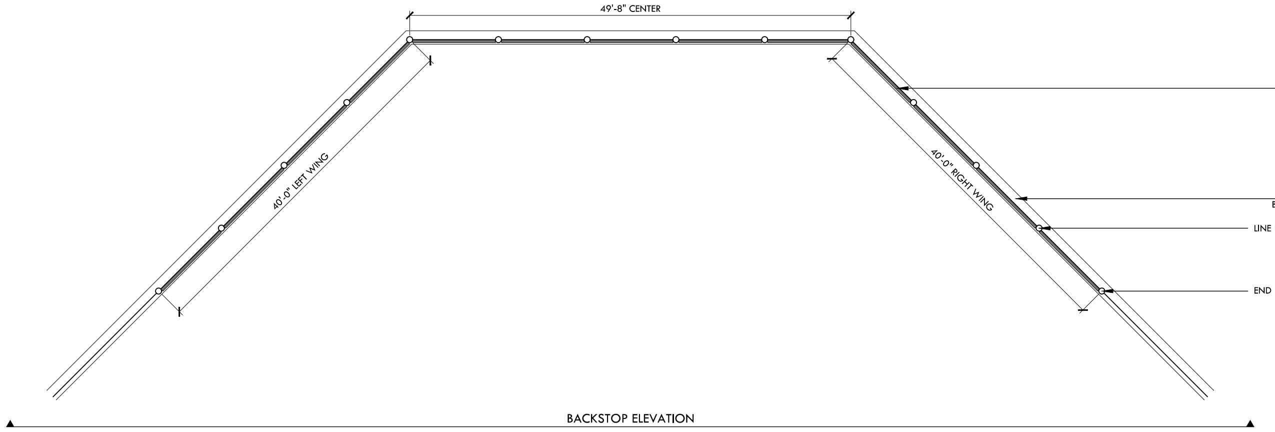

BASEBOARD CONNECTION DETAIL H / -

18" WIDE BACKSTOP EDGEBAND D / D2.2

LINE POST

END POST, TYP.

ELEVATION

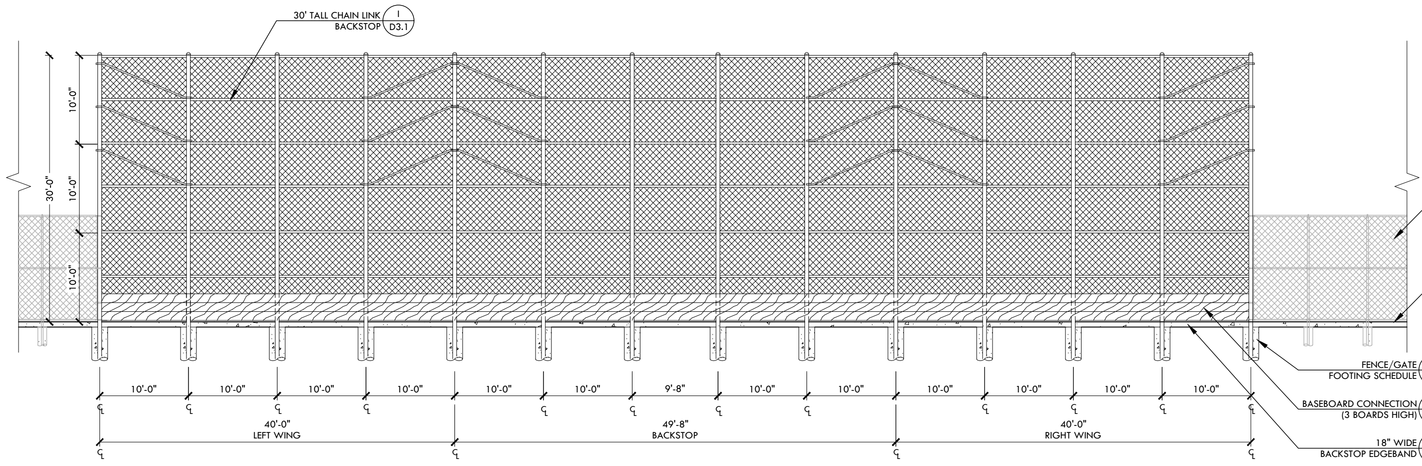

30' TALL CHAIN LINK BACKSTOP I / D3.1

7'-0" - 12'-0" TALL CHAIN LINK FENCE F / D3.1

12" WIDE EDGEBAND WITH FENCE C / D2.2

FENCE/GATE FOOTING SCHEDULE B / D3.1

BASEBOARD CONNECTION (3 BOARDS HIGH) H / -

18" WIDE BACKSTOP EDGEBAND D / D2.2

NOTES:
1. FOR LOCATION OF GATES REFER TO MATERIAL PLANS.
2. CONTRACTOR TO ETCH AND PAINT BACKSTOP AND NETTING POLES AFTER INSTALLATION WITH TWO COATS OF PAINT. COLOR TO BE BLACK.

A BASEBALL BACKSTOP NTS

IDENTIFICATION STAMP
DIV. OF THE STATE ARCHITECT
APP: 02-123587 INC:
REVIEWED FOR
SS ☑ FLS ☑ ACS ☑
DATE: 01/16/2026

VERDE DESIGN
LANDSCAPE ARCHITECTURE
CIVIL ENGINEERING
SPORT PLANNING & DESIGN
1843 Iron Point Rd. Suite 140
Folsom, CA 95630
tel: 916.415.6554
fax: 916.415.6525
www.VerdeDesignInc.com

STAMP
MARK S. BAGINSKI
No. 4089
EXPIRATION DATE: JULY 2027

CONSULTANT

KEYMAP

SHEET TITLE
FENCING DETAILS

PROJECT NAME
LODI HIGH SCHOOL
ATHLETIC FIELD
IMPROVEMENTS

PROJECT ADDRESS
3 S PACIFIC AVE
LODI, CA
95242

SUBMITTAL	DATE
50% DSA SUBMITTAL	07/31/25
100% DSA SUBMITTAL	09/25/25
DSA BACKCHECK SUBMITTAL	12/17/25
DSA BACKCHECK SUBMITTAL	01/08/26

NO.	REVISIONS	DATE
△		
△		
△		
△		
△		
△		

DRAWN BY	CHECKED BY
VDI	CS/MB
DATE ISSUED	SCALE
01/08/2026	AS NOTED

PROJ. NO.
2502700

SHEET NO.
D3.3

L

G

E

C

K

F

D

B

J

I

PLAN VIEW

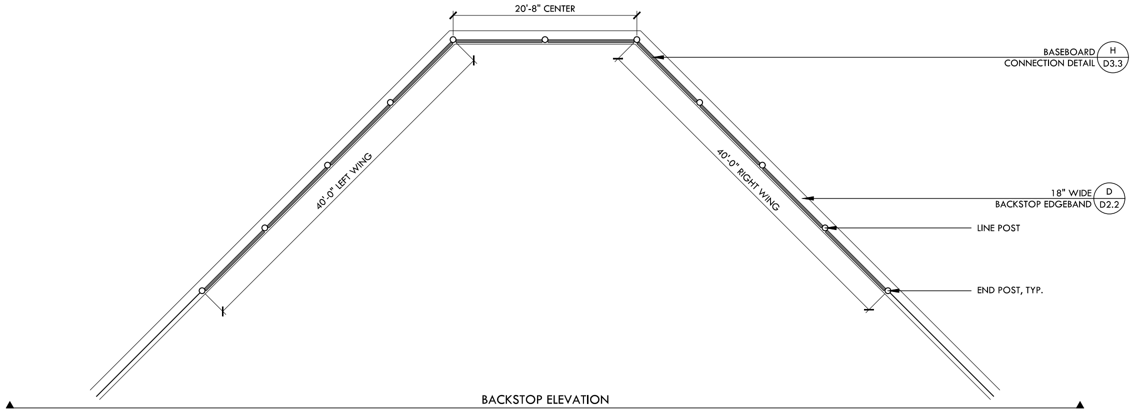
20'-8" CENTER
40'-0" LEFT WING
40'-0" RIGHT WING
BASEBOARD CONNECTION DETAIL H D3.3
18" WIDE BACKSTOP EDGEBAND D D2.2
LINE POST
END POST, TYP.
BACKSTOP ELEVATION

ELEVATION

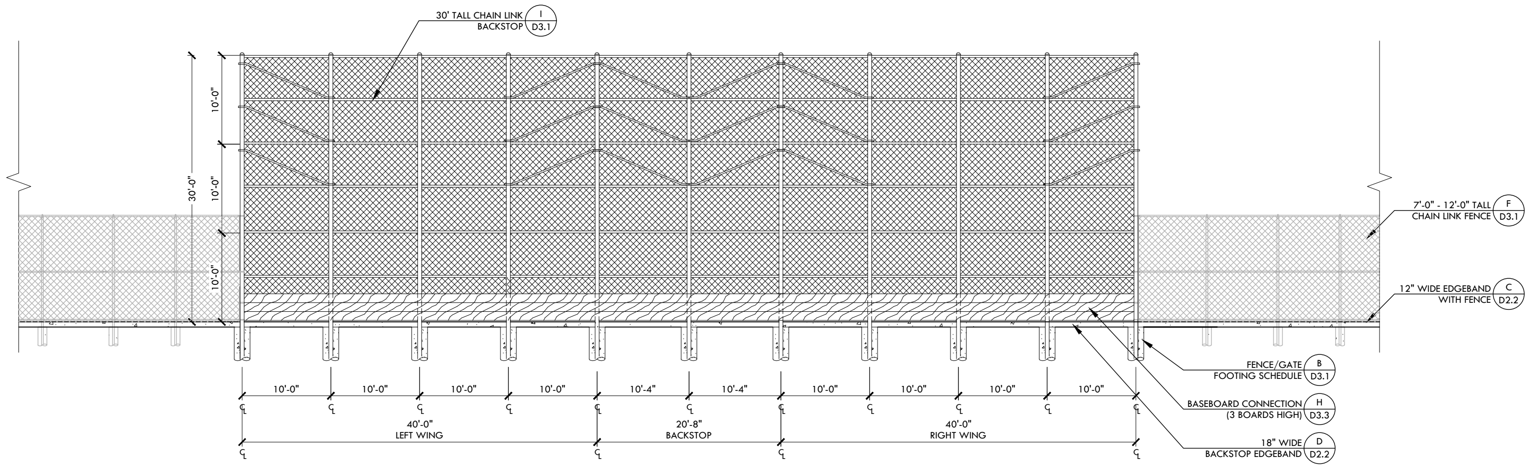
30' TALL CHAIN LINK BACKSTOP I D3.1
30'-0"
10'-0"
10'-0"
10'-0"
7'-0" - 12'-0" TALL CHAIN LINK FENCE F D3.1
12" WIDE EDGEBAND WITH FENCE C D2.2
FENCE/GATE FOOTING SCHEDULE B D3.1
BASEBOARD CONNECTION (3 BOARDS HIGH) H D3.3
18" WIDE BACKSTOP EDGEBAND D D2.2
10'-0"
10'-0"
10'-0"
10'-0"
10'-4"
10'-4"
10'-0"
10'-0"
10'-0"
10'-0"
40'-0" LEFT WING
20'-8" BACKSTOP
40'-0" RIGHT WING

NOTES:
1. FOR LOCATION OF GATES REFER TO MATERIAL PLANS.
2. CONTRACTOR TO ETCH AND PAINT BACKSTOP AND NETTING POLES AFTER INSTALLATION WITH TWO COATS OF PAINT. COLOR TO BE BLACK.

H

A SOFTBALL BACKSTOP

NTS

IDENTIFICATION STAMP
DIV. OF THE STATE ARCHITECT
APP: 02-123587 INC:
REVIEWED FOR
SS ☑ FLS ☑ ACS ☑
DATE: 01/16/2026

VERDE DESIGN
LANDSCAPE ARCHITECTURE
CIVIL ENGINEERING
SPORT PLANNING & DESIGN
1843 Iron Point Rd. Suite 140
Folsom, CA 95630
tel: 916.415.6554
fax: 916.415.6525
www.VerdeDesignInc.com

STAMP

REGISTERED LANDSCAPE ARCHITECT
MARK S. BAGINSKI
No. 4089
Signature
EXPIRATION DATE: JULY 2027
STATE OF CALIFORNIA

CONSULTANT

KEYMAP

SHEET TITLE
FENCING
DETAILS

PROJECT NAME
LODI HIGH SCHOOL
ATHLETIC FIELD
IMPROVEMENTS

PROJECT ADDRESS
3 S PACIFIC AVE
LODI, CA
95242

SUBMITTAL	DATE
50% DSA SUBMITTAL	07/31/25
100% DSA SUBMITTAL	09/25/25
DSA BACKCHECK SUBMITTAL	12/17/25
DSA BACKCHECK SUBMITTAL	01/08/26

NO.	REVISIONS	DATE
△		
△		
△		
△		
△		
△		

DRAWN BY	CHECKED BY
VDI	CS/MB
DATE ISSUED	**SCALE**
01/08/2026	AS NOTED

PROJ. NO.
2502700

SHEET NO.
D3.4

FENCING DETAILS

ALL IDEAS, DESIGNS, ARRANGEMENTS, AND PLANS INDICATED OR REPRESENTED BY THIS DRAWING ARE OWNED BY AND THE PROPERTY OF VERDE DESIGN, INC. AND WERE CREATED, EVOLVED, AND DEVELOPED FOR USE ON AND IN CONNECTION WITH THE SPECIFIED PROJECT. NONE OF SUCH IDEAS, DESIGNS, ARRANGEMENTS OR PLANS SHALL BE USED, REPRODUCED, OR PUBLISHED BY ANY METHOD, IN WHOLE OR IN PART, OR DISCLOSED TO ANY PERSON, FIRM, OR CORPORATION FOR ANY PURPOSE WHATSOEVER WITHOUT WRITTEN PERMISSION OF VERDE DESIGN, INC.

DRAWING NAME: Y:\Projects-F0\2025\2502700 - Lodi HS Baseball and Softball Field\CAD_DTL_FNC.dwg
PLOT DATE: 12-11-25 PLOTTED BY: station9

ALL IDEAS, DESIGNS, ARRANGEMENTS, AND PLANS INDICATED OR REPRESENTED BY THIS DRAWING ARE OWNED BY AND THE PROPERTY OF VERDE DESIGN, INC. AND WERE CREATED, EVOLVED, AND DEVELOPED FOR USE ON AND IN CONNECTION WITH THE SPECIFIED PROJECT. NONE OF SUCH IDEAS, DESIGNS, ARRANGEMENTS OR PLANS SHALL BE USED, REPRODUCED, OR PUBLISHED BY ANY METHOD, IN WHOLE OR IN PART, OR DISCLOSED TO ANY PERSON, FIRM, OR CORPORATION FOR ANY PURPOSE WHATSOEVER WITHOUT WRITTEN PERMISSION OF VERDE DESIGN, INC.

M

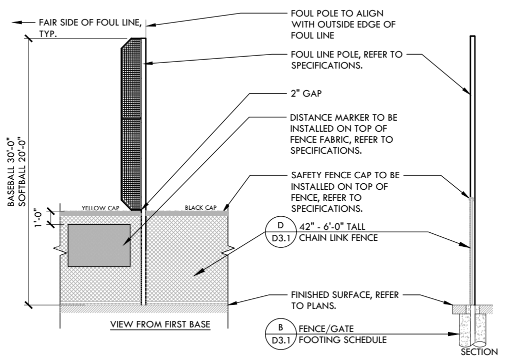
FAIR SIDE OF FOUL LINE, TYP.
FOUL POLE TO ALIGN WITH OUTSIDE EDGE OF FOUL LINE
FOUL LINE POLE, REFER TO SPECIFICATIONS.
2" GAP
DISTANCE MARKER TO BE INSTALLED ON TOP OF FENCE FABRIC, REFER TO SPECIFICATIONS.
SAFETY FENCE CAP TO BE INSTALLED ON TOP OF FENCE, REFER TO SPECIFICATIONS.
BASEBALL 30'-0"
SOFTBALL 20'-0"
1'-0"
YELLOW CAP
BLACK CAP
D / D3.1 42" - 6'-0" TALL CHAIN LINK FENCE
FINISHED SURFACE, REFER TO PLANS.
B / D3.1 FENCE/GATE FOOTING SCHEDULE
VIEW FROM FIRST BASE
SECTION

NOTE:
CONTRACTOR TO VERIFY FOUL POLE FOOTING TYPE AND INSTALL PER MANUFACTURER'S RECOMMENDATION.

J FOUL POLE AND OUTFIELD FENCE CAP NTS

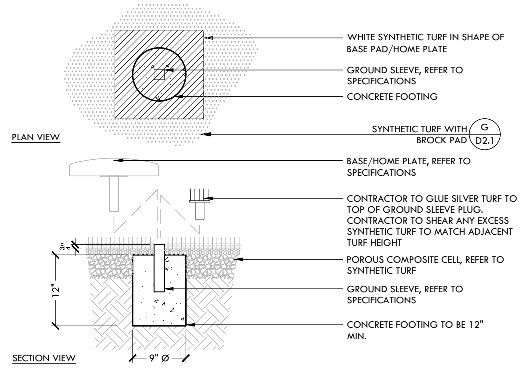
PLAN VIEW
WHITE SYNTHETIC TURF IN SHAPE OF BASE PAD/HOME PLATE
GROUND SLEEVE, REFER TO SPECIFICATIONS
CONCRETE FOOTING
SYNTHETIC TURF WITH BROCK PAD G / D2.1
BASE/HOME PLATE, REFER TO SPECIFICATIONS
CONTRACTOR TO GLUE SILVER TURF TO TOP OF GROUND SLEEVE PLUG. CONTRACTOR TO SHEAR ANY EXCESS SYNTHETIC TURF TO MATCH ADJACENT TURF HEIGHT
POROUS COMPOSITE CELL, REFER TO SYNTHETIC TURF
GROUND SLEEVE, REFER TO SPECIFICATIONS
CONCRETE FOOTING TO BE 12" MIN.
3/4"
12"
9" Ø
SECTION VIEW

E BASE GROUND SLEEVE IN SYNTHETIC TURF NTS

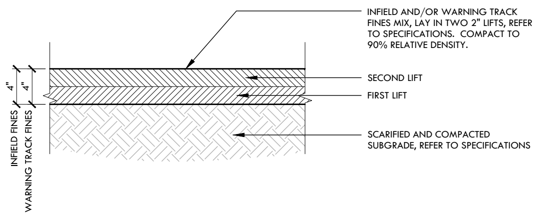
INFIELD AND/OR WARNING TRACK FINES MIX, LAY IN TWO 2" LIFTS, REFER TO SPECIFICATIONS. COMPACT TO 90% RELATIVE DENSITY.
SECOND LIFT
FIRST LIFT
SCARIFIED AND COMPACTED SUBGRADE, REFER TO SPECIFICATIONS
4"
4"
INFIELD FINES
WARNING TRACK FINES

L INFIELD / WARNING TRACK FINES NTS

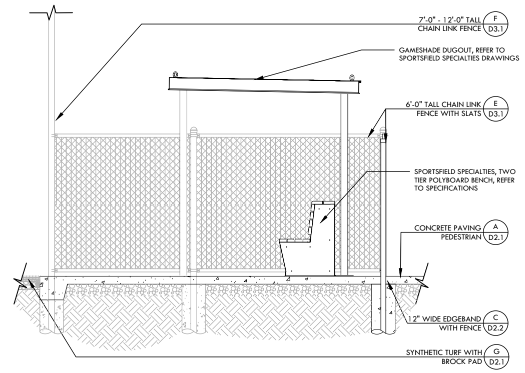
7'-0" - 12'-0" TALL CHAIN LINK FENCE F / D3.1
GAMESHADE DUGOUT, REFER TO SPORTSFIELD SPECIALTIES DRAWINGS
6'-0" TALL CHAIN LINK FENCE WITH SLATS E / D3.1
SPORTSFIELD SPECIALTIES, TWO TIER POLYBOARD BENCH, REFER TO SPECIFICATIONS
CONCRETE PAVING PEDESTRIAN A / D2.1
12" WIDE EDGEBAND WITH FENCE C / D2.2
SYNTHETIC TURF WITH BROCK PAD G / D2.1

I DUGOUT - SECTION NTS

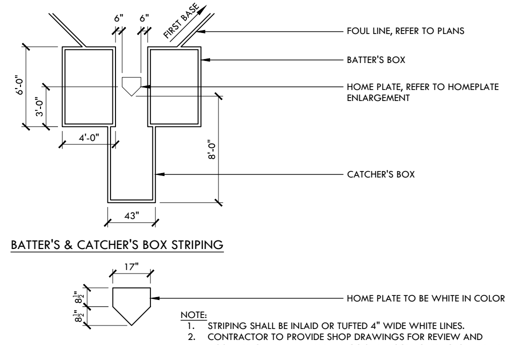
6"
6"
FIRST BASE
FOUL LINE, REFER TO PLANS
BATTER'S BOX
HOME PLATE, REFER TO HOMEPLATE ENLARGEMENT
6'-0"
3'-0"
4'-0"
8'-0"
CATCHER'S BOX
43"
BATTER'S & CATCHER'S BOX STRIPING
17"
8 1/2"
8 1/2"
HOME PLATE TO BE WHITE IN COLOR
HOME PLATE ENLARGEMENT

NOTE:
1. STRIPING SHALL BE INLAID OR TUFTED 4" WIDE WHITE LINES.
2. CONTRACTOR TO PROVIDE SHOP DRAWINGS FOR REVIEW AND ACCEPTANCE. ALL FIELD MARKINGS SHALL CONFORM TO CURRENT NFHS AND C.I.F (CALIFORNIA INTERSCHOLASTIC FEDERATION) GUIDELINES.

D HOME PLATE - BASEBALL NTS

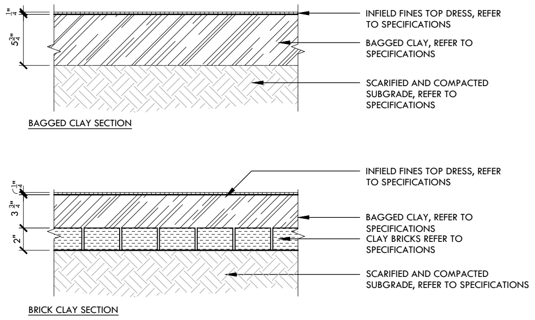
1/4"
5 3/4"
INFIELD FINES TOP DRESS, REFER TO SPECIFICATIONS
BAGGED CLAY, REFER TO SPECIFICATIONS
SCARIFIED AND COMPACTED SUBGRADE, REFER TO SPECIFICATIONS
BAGGED CLAY SECTION
1/4"
3 3/4"
2"
INFIELD FINES TOP DRESS, REFER TO SPECIFICATIONS
BAGGED CLAY, REFER TO SPECIFICATIONS
CLAY BRICKS REFER TO SPECIFICATIONS
SCARIFIED AND COMPACTED SUBGRADE, REFER TO SPECIFICATIONS
BRICK CLAY SECTION

NOTE:
ALL CLAY LAYERS TO BE TAMPED AND COMPACTED PRIOR TO NEXT LEVEL INSTALL.

K INFIELD FINES OVER CLAY NTS

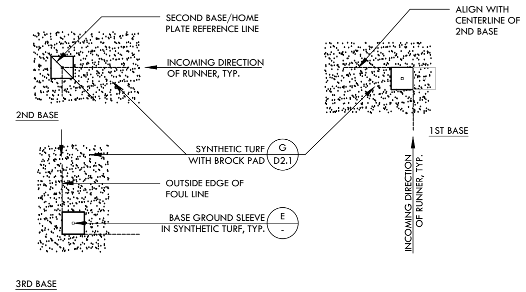
SECOND BASE/HOME PLATE REFERENCE LINE
INCOMING DIRECTION OF RUNNER, TYP.
ALIGN WITH CENTERLINE OF 2ND BASE
2ND BASE
1ST BASE
SYNTHETIC TURF WITH BROCK PAD G / D2.1
OUTSIDE EDGE OF FOUL LINE
BASE GROUND SLEEVE IN SYNTHETIC TURF, TYP. E / -
INCOMING DIRECTION OF RUNNER, TYP.
3RD BASE

NOTES:
1. PEGS LOCATED CENTERED ON BASE, 7" FROM INTERSECTION OF BASE LINE FOR 1ST AND 3RD BASES.
2. PEGS LOCATED ON INTERSECTION OF BASE LINE FOR 2ND BASE.
3. DETAIL PROVIDED FOR LOCATION ONLY.

H SOFTBALL AND BASEBALL BASE PAD LOCATION NTS

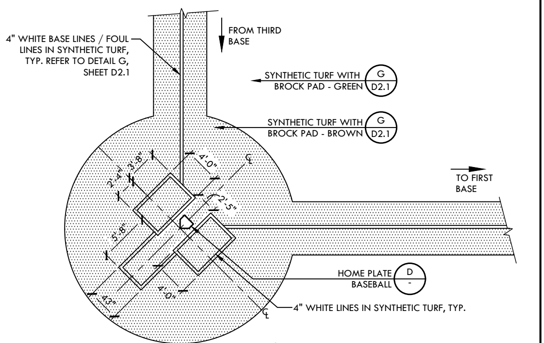
4" WHITE BASE LINES / FOUL LINES IN SYNTHETIC TURF, TYP. REFER TO DETAIL G, SHEET D2.1
FROM THIRD BASE
SYNTHETIC TURF WITH BROCK PAD - GREEN G / D2.1
SYNTHETIC TURF WITH BROCK PAD - BROWN G / D2.1
3'-8"
2'-4"
4'-0"
2'-5"
5'-8"
4'-0"
43"
℄
TO FIRST BASE
HOME PLATE BASEBALL D / -
4" WHITE LINES IN SYNTHETIC TURF, TYP.
PLAN

NOTE:
FOR HOME PLATE LOCATION IN FIELD REFER TO LAYOUT PLAN.

C BASEBALL HOME PLATE AREA NTS

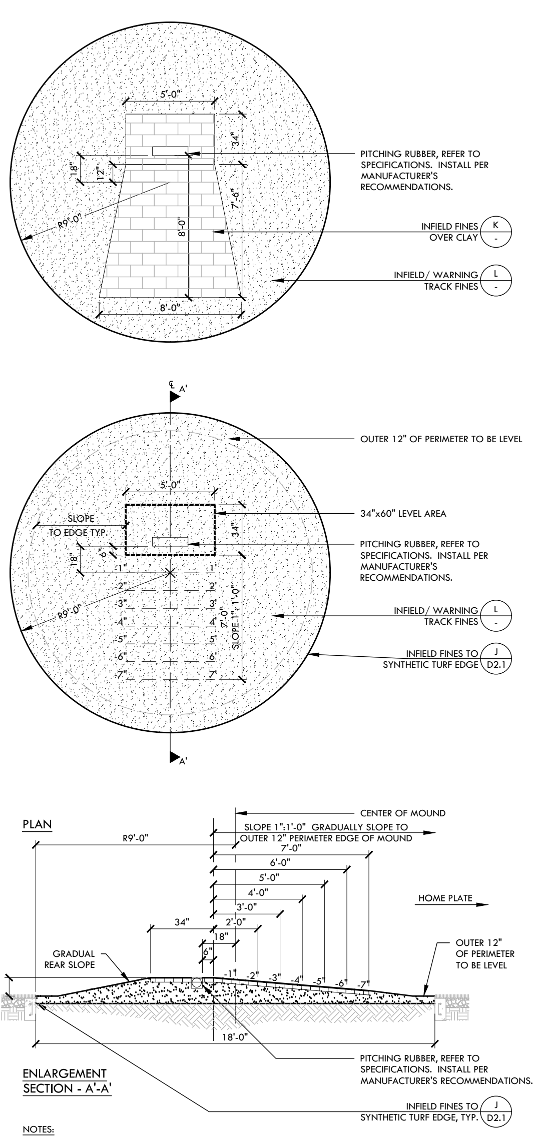
5'-0"
34"
18"
12"
7'-6"
8'-0"
8'-0"
R9'-0"
PITCHING RUBBER, REFER TO SPECIFICATIONS. INSTALL PER MANUFACTURER'S RECOMMENDATIONS.
INFIELD FINES OVER CLAY K / -
INFIELD/ WARNING TRACK FINES L / -
℄ A'
OUTER 12" OF PERIMETER TO BE LEVEL
5'-0"
34"x60" LEVEL AREA
SLOPE TO EDGE TYP.
34"
6"
18"
PITCHING RUBBER, REFER TO SPECIFICATIONS. INSTALL PER MANUFACTURER'S RECOMMENDATIONS.
-1" -2" -3" -4" -5" -6" -7"
1' 2' 3' 4' 5' 6' 7'
7'-0"
SLOPE 1":1'-0"
R9'-0"
INFIELD/ WARNING TRACK FINES L / -
INFIELD FINES TO SYNTHETIC TURF EDGE J / D2.1
A'
PLAN
CENTER OF MOUND
SLOPE 1":1'-0" GRADUALLY SLOPE TO OUTER 12" PERIMETER EDGE OF MOUND
R9'-0"
7'-0"
6'-0"
5'-0"
4'-0"
3'-0"
2'-0"
34"
18"
6"
HOME PLATE
GRADUAL REAR SLOPE
OUTER 12" OF PERIMETER TO BE LEVEL
10"
-1" -2" -3" -4" -5" -6" -7"
18'-0"
PITCHING RUBBER, REFER TO SPECIFICATIONS. INSTALL PER MANUFACTURER'S RECOMMENDATIONS.
INFIELD FINES TO SYNTHETIC TURF EDGE, TYP. J / D2.1
ENLARGEMENT SECTION - A'-A'

NOTES:
1. LOCATE FRONT EDGE OF PLATE 18" BEHIND CENTER OF MOUND.
2. PITCHING MOUND HEIGHT PER OFFICIAL BASEBALL RULES.
3. DISTANCE FROM FRONT OF PITCHING PLATE TO BACK OF HOME PLATE TO BE 60'-6".

B PITCHERS MOUND - BASEBALL NTS

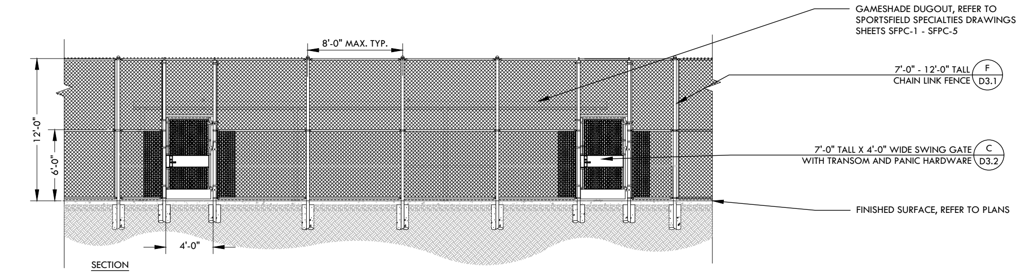
GAMESHADE DUGOUT, REFER TO SPORTSFIELD SPECIALTIES DRAWINGS SHEETS SFPC-1 - SFPC-5
8'-0" MAX. TYP.
7'-0" - 12'-0" TALL CHAIN LINK FENCE F / D3.1
12'-0"
6'-0"
7'-0" TALL X 4'-0" WIDE SWING GATE WITH TRANSOM AND PANIC HARDWARE C / D3.2
FINISHED SURFACE, REFER TO PLANS
4'-0"
SECTION

NOTE:
THIS DETAIL REFLECTS CONDITION ALONG 3RD BASE @ VARSITY BASEBALL FIELD AND 3RD BASE @ SOFTBALL FIELD.

G DUGOUT - ELEVATION NTS

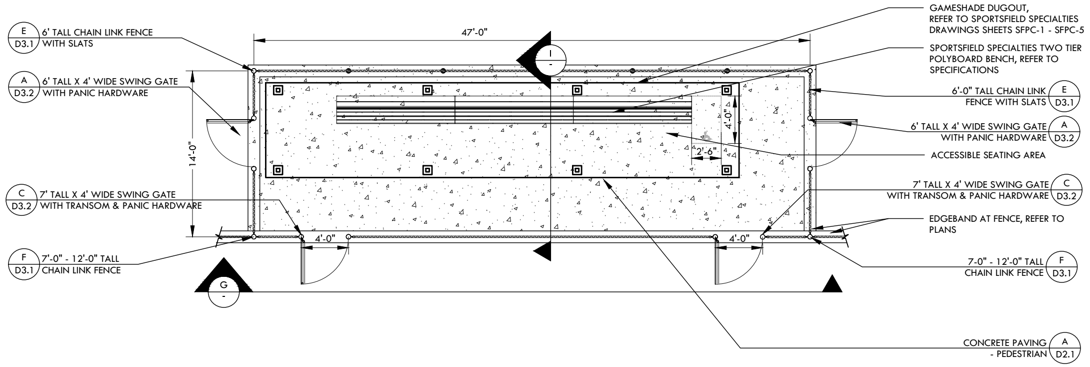
E / D3.1 6' TALL CHAIN LINK FENCE WITH SLATS
A / D3.2 6' TALL X 4' WIDE SWING GATE WITH PANIC HARDWARE
C / D3.2 7' TALL X 4' WIDE SWING GATE WITH TRANSOM & PANIC HARDWARE
F / D3.1 7'-0" - 12'-0" TALL CHAIN LINK FENCE
47'-0"
14'-0"
4'-0"
2'-6"
4'-0"
4'-0"
I / -
G / -
GAMESHADE DUGOUT, REFER TO SPORTSFIELD SPECIALTIES DRAWINGS SHEETS SFPC-1 - SFPC-5
SPORTSFIELD SPECIALTIES TWO TIER POLYBOARD BENCH, REFER TO SPECIFICATIONS
6'-0" TALL CHAIN LINK FENCE WITH SLATS E / D3.1
6' TALL X 4' WIDE SWING GATE WITH PANIC HARDWARE A / D3.2
ACCESSIBLE SEATING AREA
7' TALL X 4' WIDE SWING GATE WITH TRANSOM & PANIC HARDWARE C / D3.2
EDGEBAND AT FENCE, REFER TO PLANS
7-0" - 12'-0" TALL CHAIN LINK FENCE F / D3.1
CONCRETE PAVING - PEDESTRIAN A / D2.1

F DUGOUT - PLAN NTS

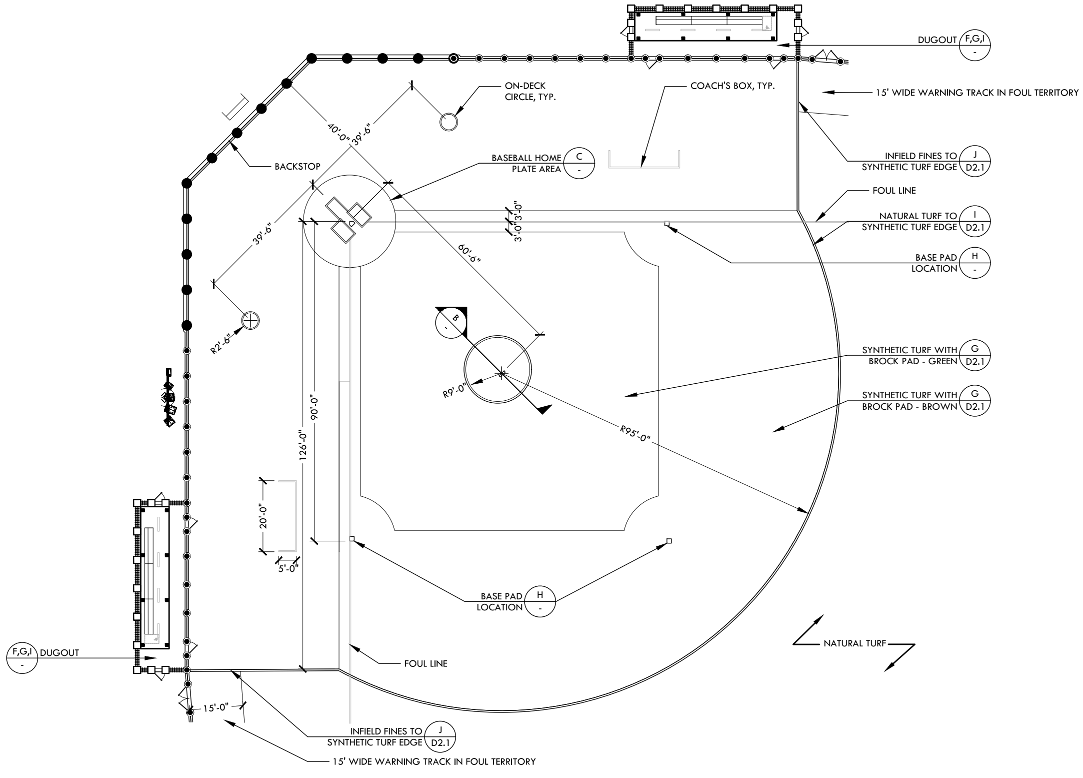
DUGOUT F,G,I / -
ON-DECK CIRCLE, TYP.
COACH'S BOX, TYP.
15' WIDE WARNING TRACK IN FOUL TERRITORY
40'-0"
39'-6"
BACKSTOP
BASEBALL HOME PLATE AREA C / -
INFIELD FINES TO SYNTHETIC TURF EDGE J / D2.1
FOUL LINE
3'-0"
3'-0"
NATURAL TURF TO SYNTHETIC TURF EDGE I / D2.1
39'-6"
60'-6"
BASE PAD LOCATION H / -
R2'-6"
B / -
R9'-0"
SYNTHETIC TURF WITH BROCK PAD - GREEN G / D2.1
SYNTHETIC TURF WITH BROCK PAD - BROWN G / D2.1
R95'-0"
90'-0"
126'-0"
20'-0"
5'-0"
BASE PAD LOCATION H / -
NATURAL TURF
F,G,I / - DUGOUT
FOUL LINE
15'-0"
INFIELD FINES TO SYNTHETIC TURF EDGE J / D2.1
15' WIDE WARNING TRACK IN FOUL TERRITORY

A BASEBALL INFIELD NTS

IDENTIFICATION STAMP
DIV. OF THE STATE ARCHITECT
APP: 02-123587 INC:
REVIEWED FOR
SS ☑ FLS ☑ ACS ☑
DATE: 01/16/2026

VERDE DESIGN
LANDSCAPE ARCHITECTURE
CIVIL ENGINEERING
SPORT PLANNING & DESIGN
1843 Iron Point Rd. Suite 140
Folsom, CA 95630
tel: 916.415.6554
fax: 916.415.6525
www.VerdeDesigninc.com

STAMP
MARK S. BAGINSKI
No. 4039
EXPIRATION DATE: JULY 2027

CONSULTANT

KEYMAP

SHEET TITLE
CONSTRUCTION DETAILS - BASEBALL

PROJECT NAME
LODI HIGH SCHOOL ATHLETIC FIELD IMPROVEMENTS

PROJECT ADDRESS
3 S PACIFIC AVE
LODI, CA
95242

SUBMITTAL	DATE
50% DSA SUBMITTAL	07/31/25
100% DSA SUBMITTAL	09/25/25
DSA BACKCHECK SUBMITTAL	12/17/25
DSA BACKCHECK SUBMITTAL	01/08/26

NO.	REVISIONS	DATE
△		
△		
△		
△		
△		
△		

DRAWN BY: VDI
CHECKED BY: CS/MB
DATE ISSUED: 01/08/2026
SCALE: AS NOTED
PROJ. NO.: 2502700
SHEET NO.: D4.1

ALL IDEAS, DESIGNS, ARRANGEMENTS, AND PLANS INDICATED OR REPRESENTED BY THIS DRAWING ARE OWNED BY AND THE PROPERTY OF VERDE DESIGN, INC. AND WERE CREATED, EVOLVED, AND DEVELOPED FOR USE ON AND IN CONNECTION WITH THE SPECIFIED PROJECT. NONE OF SUCH IDEAS, DESIGNS, ARRANGEMENTS OR PLANS SHALL BE USED, REPRODUCED, OR PUBLISHED BY ANY METHOD, IN WHOLE OR IN PART, OR DISCLOSED TO ANY PERSON, FIRM, OR CORPORATION FOR ANY PURPOSE WHATSOEVER WITHOUT WRITTEN PERMISSION OF VERDE DESIGN, INC.

N

M

L

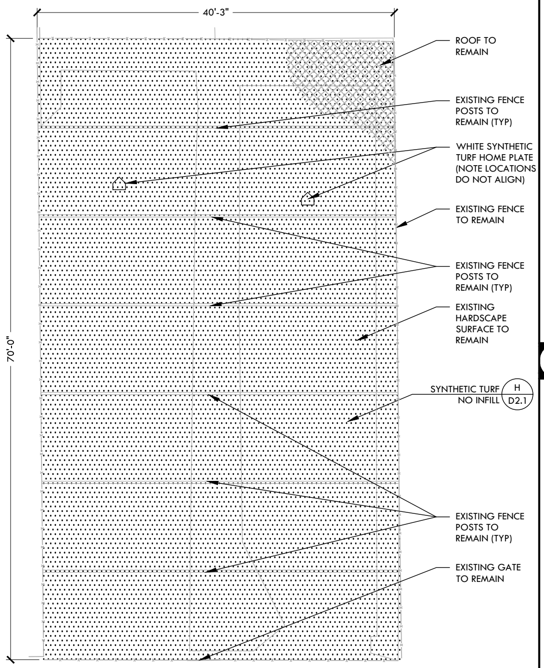
40'-3"
70'-0"
ROOF TO REMAIN
EXISTING FENCE POSTS TO REMAIN (TYP)
WHITE SYNTHETIC TURF HOME PLATE (NOTE LOCATIONS DO NOT ALIGN)
EXISTING FENCE TO REMAIN
EXISTING FENCE POSTS TO REMAIN (TYP)
EXISTING HARDSCAPE SURFACE TO REMAIN
SYNTHETIC TURF NO INFILL H/D2.1
EXISTING FENCE POSTS TO REMAIN (TYP)
EXISTING GATE TO REMAIN

NOTE:
1. FOR BATTING TUNNEL NETTING, REFER TO DETAIL B, SHEET D4.4.

K EXISTING BATTING CAGE RESURFACE NTS

NOT USED

J

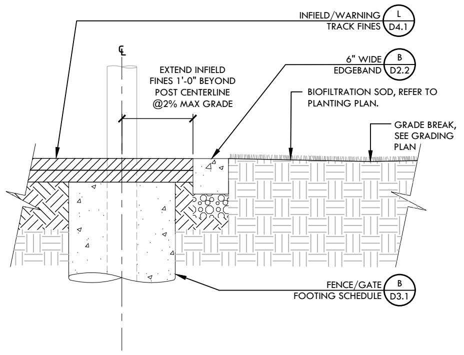
INFIELD/WARNING TRACK FINES L/D4.1
6" WIDE EDGEBAND B/D2.2
EXTEND INFIELD FINES 1'-0" BEYOND POST CENTERLINE @2% MAX GRADE
BIOFILTRATION SOD, REFER TO PLANTING PLAN.
GRADE BREAK, SEE GRADING PLAN
FENCE/GATE FOOTING SCHEDULE B/D3.1

I FENCE IN INFIELD FINES NTS

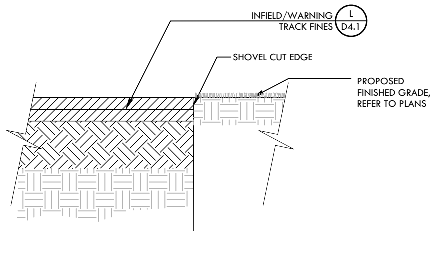
INFIELD/WARNING TRACK FINES L/D4.1
SHOVEL CUT EDGE
PROPOSED FINISHED GRADE, REFER TO PLANS

NOTE:
FINES TO EXTEND 1'-0" BEYOND FENCE (WHERE APPLICABLE) AND TERMINATE W/ SHOVEL CUT EDGE.

H SHOVEL CUT EDGE NTS

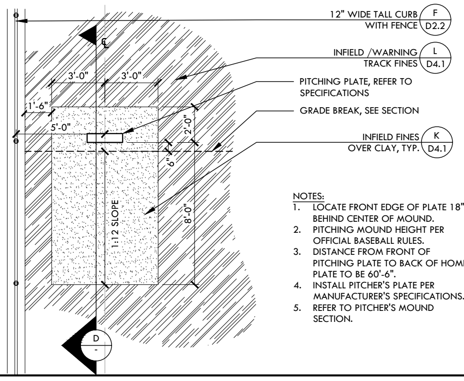
12" WIDE TALL CURB WITH FENCE F/D2.2
INFIELD /WARNING TRACK FINES L/D4.1
PITCHING PLATE, REFER TO SPECIFICATIONS
GRADE BREAK, SEE SECTION
INFIELD FINES OVER CLAY, TYP. K/D4.1
3'-0"
3'-0"
1'-6"
5'-0"
2'-0"
6"
8'-0"
1:12 SLOPE
D/-

NOTES:
1. LOCATE FRONT EDGE OF PLATE 18" BEHIND CENTER OF MOUND.
2. PITCHING MOUND HEIGHT PER OFFICIAL BASEBALL RULES.
3. DISTANCE FROM FRONT OF PITCHING PLATE TO BACK OF HOME PLATE TO BE 60'-6".
4. INSTALL PITCHER'S PLATE PER MANUFACTURER'S SPECIFICATIONS.
5. REFER TO PITCHER'S MOUND SECTION.

G PITCHING MOUND IN BULLPEN - BASEBALL NTS

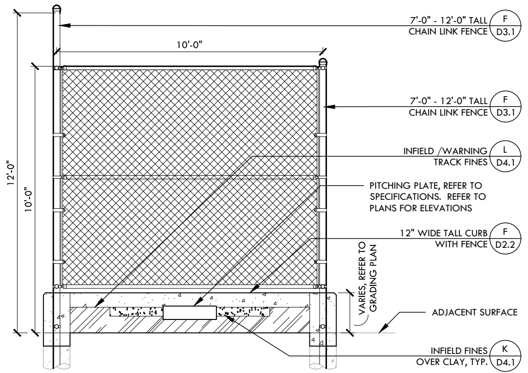
12'-0"
10'-0"
10'-0"
7'-0" - 12'-0" TALL CHAIN LINK FENCE F/D3.1
7'-0" - 12'-0" TALL CHAIN LINK FENCE F/D3.1
INFIELD /WARNING TRACK FINES L/D4.1
PITCHING PLATE, REFER TO SPECIFICATIONS. REFER TO PLANS FOR ELEVATIONS
12" WIDE TALL CURB WITH FENCE F/D2.2
VARIES, REFER TO GRADING PLAN
ADJACENT SURFACE
INFIELD FINES OVER CLAY, TYP. K/D4.1

F BASEBALL SINGLE BULLPEN - SECTION NTS

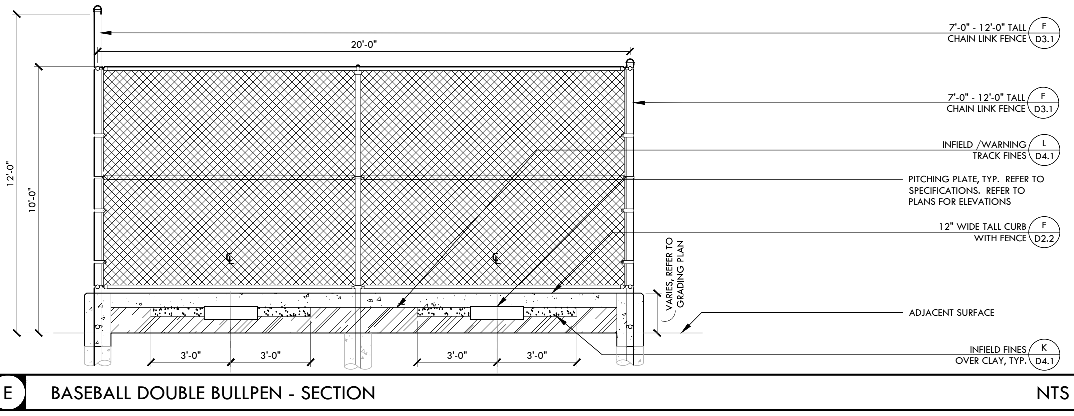
12'-0"
10'-0"
20'-0"
7'-0" - 12'-0" TALL CHAIN LINK FENCE F/D3.1
7'-0" - 12'-0" TALL CHAIN LINK FENCE F/D3.1
INFIELD /WARNING TRACK FINES L/D4.1
PITCHING PLATE, TYP. REFER TO SPECIFICATIONS. REFER TO PLANS FOR ELEVATIONS
12" WIDE TALL CURB WITH FENCE F/D2.2
VARIES, REFER TO GRADING PLAN
ADJACENT SURFACE
INFIELD FINES OVER CLAY, TYP. K/D4.1
3'-0"
3'-0"
3'-0"
3'-0"

E BASEBALL DOUBLE BULLPEN - SECTION NTS

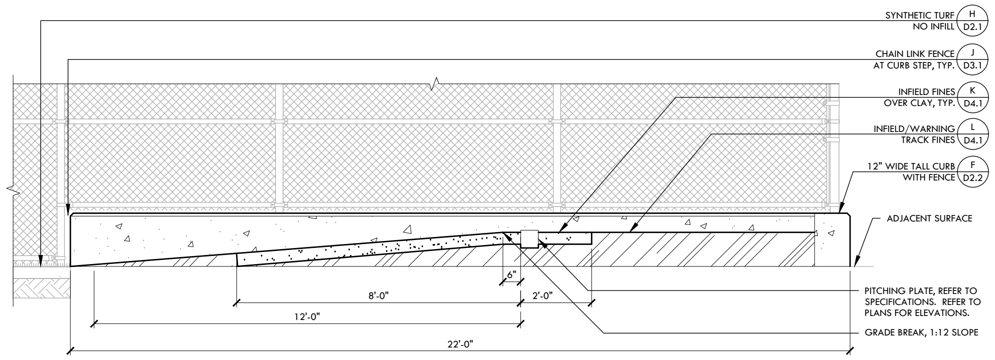
SYNTHETIC TURF NO INFILL H/D2.1
CHAIN LINK FENCE AT CURB STEP, TYP. J/D3.1
INFIELD FINES OVER CLAY, TYP. K/D4.1
INFIELD/WARNING TRACK FINES L/D4.1
12" WIDE TALL CURB WITH FENCE F/D2.2
ADJACENT SURFACE
PITCHING PLATE, REFER TO SPECIFICATIONS. REFER TO PLANS FOR ELEVATIONS.
GRADE BREAK, 1:12 SLOPE
6"
8'-0"
2'-0"
12'-0"
22'-0"

D BASEBALL BULLPEN PITCHING MOUND - SECTION NTS

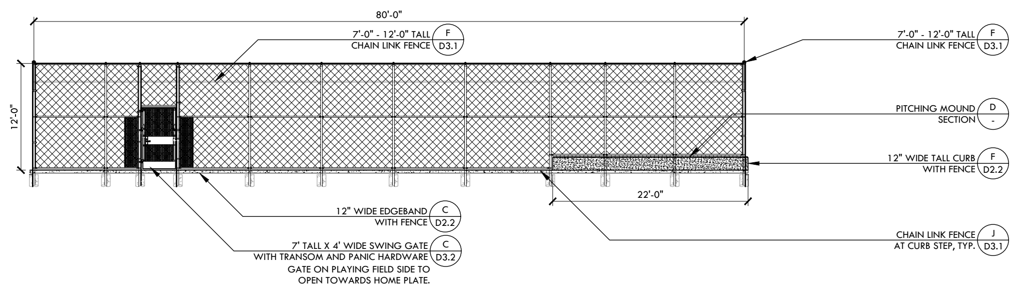
80'-0"
12'-0"
7'-0" - 12'-0" TALL CHAIN LINK FENCE F/D3.1
7'-0" - 12'-0" TALL CHAIN LINK FENCE F/D3.1
PITCHING MOUND SECTION D/-
12" WIDE TALL CURB WITH FENCE F/D2.2
22'-0"
12" WIDE EDGEBAND WITH FENCE C/D2.2
7' TALL X 4' WIDE SWING GATE WITH TRANSOM AND PANIC HARDWARE C/D3.2
GATE ON PLAYING FIELD SIDE TO OPEN TOWARDS HOME PLATE.
CHAIN LINK FENCE AT CURB STEP, TYP. J/D3.1

C BASEBALL BULLPEN - ELEVATION NTS

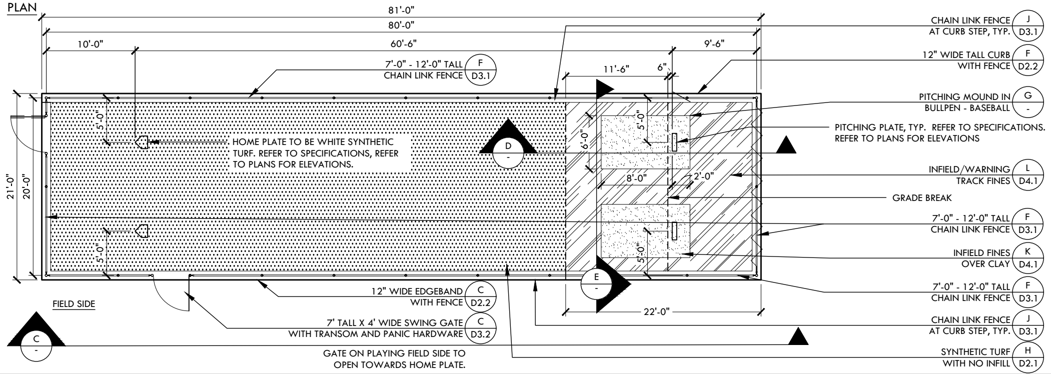
PLAN
81'-0"
80'-0"
10'-0"
60'-6"
9'-6"
11'-6"
6"
7'-0" - 12'-0" TALL CHAIN LINK FENCE F/D3.1
21'-0"
20'-0"
5'-0"
5'-0"
HOME PLATE TO BE WHITE SYNTHETIC TURF. REFER TO SPECIFICATIONS, REFER TO PLANS FOR ELEVATIONS.
D/-
6'-0"
5'-0"
8'-0"
2'-0"
5'-0"
E/-
22'-0"
FIELD SIDE
C/-
12" WIDE EDGEBAND WITH FENCE C/D2.2
7' TALL X 4' WIDE SWING GATE WITH TRANSOM AND PANIC HARDWARE C/D3.2
GATE ON PLAYING FIELD SIDE TO OPEN TOWARDS HOME PLATE.
CHAIN LINK FENCE AT CURB STEP, TYP. J/D3.1
12" WIDE TALL CURB WITH FENCE F/D2.2
PITCHING MOUND IN BULLPEN - BASEBALL G/-
PITCHING PLATE, TYP. REFER TO SPECIFICATIONS. REFER TO PLANS FOR ELEVATIONS
INFIELD/WARNING TRACK FINES L/D4.1
GRADE BREAK
7'-0" - 12'-0" TALL CHAIN LINK FENCE F/D3.1
INFIELD FINES OVER CLAY K/D4.1
7'-0" - 12'-0" TALL CHAIN LINK FENCE F/D3.1
CHAIN LINK FENCE AT CURB STEP, TYP. J/D3.1
SYNTHETIC TURF WITH NO INFILL H/D2.1

B BASEBALL DOUBLE BULLPEN - PLAN NTS

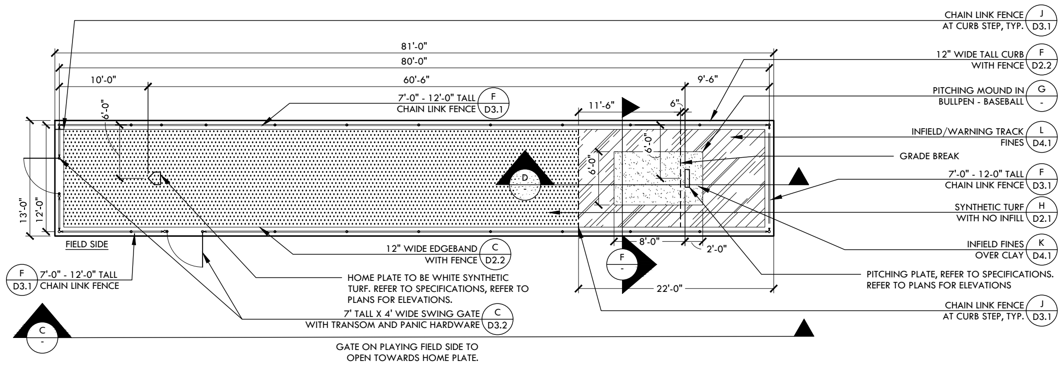
81'-0"
80'-0"
10'-0"
60'-6"
9'-6"
11'-6"
6"
7'-0" - 12'-0" TALL CHAIN LINK FENCE F/D3.1
6'-0"
13'-0"
12'-0"
D/-
6'-0"
6'-0"
8'-0"
2'-0"
F/-
22'-0"
FIELD SIDE
F/D3.1 7'-0" - 12'-0" TALL CHAIN LINK FENCE
C/-
12" WIDE EDGEBAND WITH FENCE C/D2.2
HOME PLATE TO BE WHITE SYNTHETIC TURF. REFER TO SPECIFICATIONS, REFER TO PLANS FOR ELEVATIONS.
7' TALL X 4' WIDE SWING GATE WITH TRANSOM AND PANIC HARDWARE C/D3.2
GATE ON PLAYING FIELD SIDE TO OPEN TOWARDS HOME PLATE.
CHAIN LINK FENCE AT CURB STEP, TYP. J/D3.1
12" WIDE TALL CURB WITH FENCE F/D2.2
PITCHING MOUND IN BULLPEN - BASEBALL G/-
INFIELD/WARNING TRACK FINES L/D4.1
GRADE BREAK
7'-0" - 12-0" TALL CHAIN LINK FENCE F/D3.1
SYNTHETIC TURF WITH NO INFILL H/D2.1
INFIELD FINES OVER CLAY K/D4.1
PITCHING PLATE, REFER TO SPECIFICATIONS. REFER TO PLANS FOR ELEVATIONS
CHAIN LINK FENCE AT CURB STEP, TYP. J/D3.1

A BASEBALL SINGLE BULLPEN - PLAN NTS

IDENTIFICATION STAMP
DIV. OF THE STATE ARCHITECT
APP: 02-123587 INC:
REVIEWED FOR
SS ☑ FLS ☑ ACS ☑
DATE: 01/16/2026

VERDE DESIGN
LANDSCAPE ARCHITECTURE
CIVIL ENGINEERING
SPORT PLANNING & DESIGN
1843 Iron Point Rd. Suite 140
Folsom, CA 95630
tel: 916.415.6554
fax: 916.415.6525
www.VerdeDesignInc.com

STAMP

MARK S. BAGINSKI
No. 4089
EXPIRATION DATE: JULY 2027

CONSULTANT

KEYMAP

SHEET TITLE
CONSTRUCTION DETAILS - BASEBALL

PROJECT NAME
LODI HIGH SCHOOL ATHLETIC FIELD IMPROVEMENTS

PROJECT ADDRESS
3 S PACIFIC AVE
LODI, CA
95242

SUBMITTAL	DATE
50% DSA SUBMITTAL	07/31/25
100% DSA SUBMITTAL	09/25/25
DSA BACKCHECK SUBMITTAL	12/17/25
DSA BACKCHECK SUBMITTAL	01/08/26

NO.	REVISIONS	DATE
△		
△		
△		
△		
△		
△		

DRAWN BY	CHECKED BY
VDI	CS/MB

DATE ISSUED	SCALE
01/08/2026	AS NOTED

PROJ. NO.
2502700

SHEET NO.
D4.2

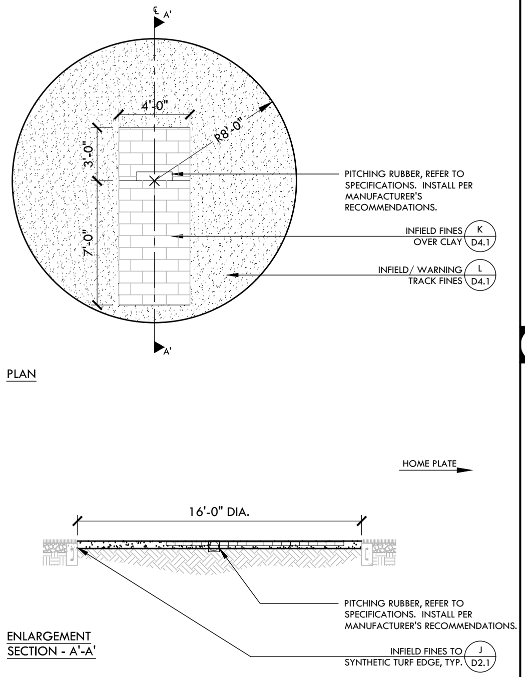
℄ A'
4'-0"
R8'-0"
3'-0"
7'-0"
PITCHING RUBBER, REFER TO SPECIFICATIONS. INSTALL PER MANUFACTURER'S RECOMMENDATIONS.
INFIELD FINES OVER CLAY K D4.1
INFIELD/ WARNING TRACK FINES L D4.1
A'
PLAN
HOME PLATE
16'-0" DIA.
PITCHING RUBBER, REFER TO SPECIFICATIONS. INSTALL PER MANUFACTURER'S RECOMMENDATIONS.
ENLARGEMENT SECTION - A'-A'
INFIELD FINES TO SYNTHETIC TURF EDGE, TYP. J D2.1

NOTES:
1. LOCATE FRONT EDGE OF PLATE BEHIND CENTER OF MOUND.
2. DISTANCE FROM FRONT OF PITCHING PLATE TO BACK OF HOME PLATE TO BE 43'-0".

K PITCHER'S AREA - SOFTBALL NTS

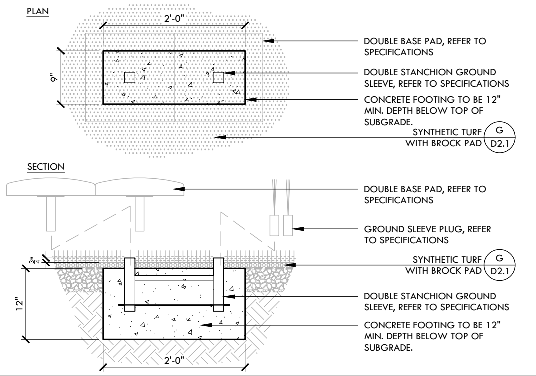
PLAN
2'-0"
9"
DOUBLE BASE PAD, REFER TO SPECIFICATIONS
DOUBLE STANCHION GROUND SLEEVE, REFER TO SPECIFICATIONS
CONCRETE FOOTING TO BE 12" MIN. DEPTH BELOW TOP OF SUBGRADE.
SYNTHETIC TURF WITH BROCK PAD G D2.1
SECTION
DOUBLE BASE PAD, REFER TO SPECIFICATIONS
GROUND SLEEVE PLUG, REFER TO SPECIFICATIONS
SYNTHETIC TURF WITH BROCK PAD G D2.1
3/4"
12"
DOUBLE STANCHION GROUND SLEEVE, REFER TO SPECIFICATIONS
CONCRETE FOOTING TO BE 12" MIN. DEPTH BELOW TOP OF SUBGRADE.
2'-0"

I DOUBLE GROUND SLEEVE IN SYNTHETIC TURF NTS

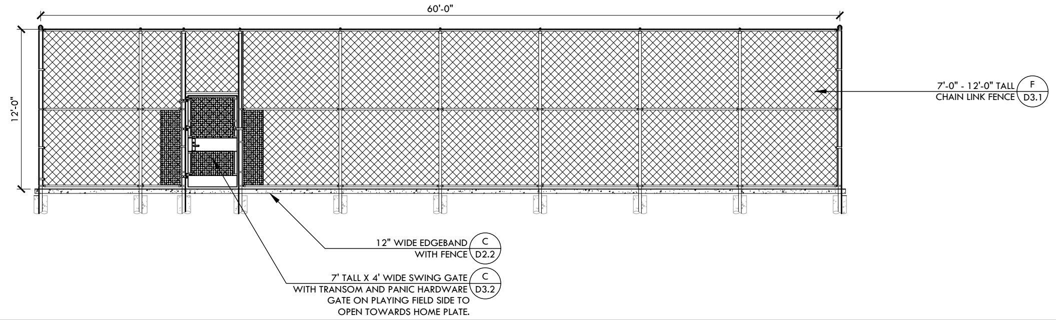
60'-0"
12'-0"
7'-0" - 12'-0" TALL CHAIN LINK FENCE F D3.1
12" WIDE EDGEBAND WITH FENCE C D2.2
7' TALL X 4' WIDE SWING GATE WITH TRANSOM AND PANIC HARDWARE C D3.2
GATE ON PLAYING FIELD SIDE TO OPEN TOWARDS HOME PLATE.

D SOFTBALL BULLPEN - ELEVATION NTS

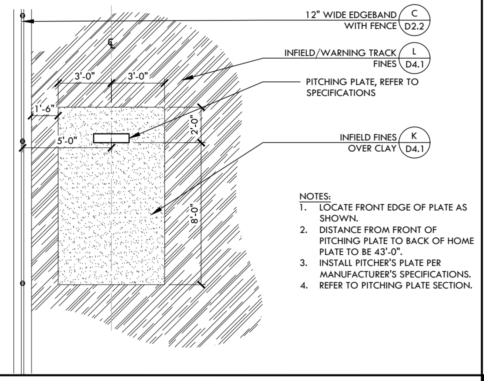
12" WIDE EDGEBAND WITH FENCE C D2.2
INFIELD/WARNING TRACK FINES L D4.1
PITCHING PLATE, REFER TO SPECIFICATIONS
℄
3'-0"
3'-0"
1'-6"
5'-0"
2'-0"
8'-0"
INFIELD FINES OVER CLAY K D4.1

NOTES:
1. LOCATE FRONT EDGE OF PLATE AS SHOWN.
2. DISTANCE FROM FRONT OF PITCHING PLATE TO BACK OF HOME PLATE TO BE 43'-0".
3. INSTALL PITCHER'S PLATE PER MANUFACTURER'S SPECIFICATIONS.
4. REFER TO PITCHING PLATE SECTION.

H PITCHING MOUND IN BULLPEN - SOFTBALL NTS

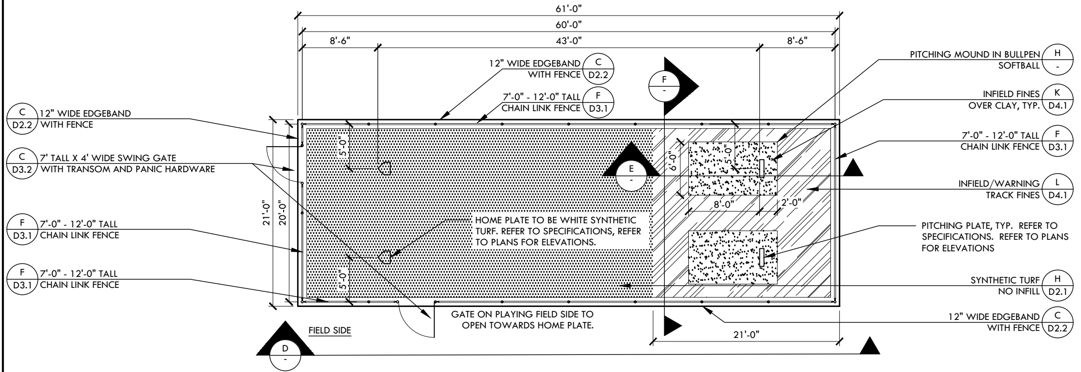
61'-0"
60'-0"
8'-6"
43'-0"
8'-6"
12" WIDE EDGEBAND WITH FENCE C D2.2
7'-0" - 12'-0" TALL CHAIN LINK FENCE F D3.1
F -
C D2.2 12" WIDE EDGEBAND WITH FENCE
C D3.2 7' TALL X 4' WIDE SWING GATE WITH TRANSOM AND PANIC HARDWARE
F D3.1 7'-0" - 12'-0" TALL CHAIN LINK FENCE
F D3.1 7'-0" - 12'-0" TALL CHAIN LINK FENCE
21'-0"
20'-0"
5'-0"
5'-0"
HOME PLATE TO BE WHITE SYNTHETIC TURF. REFER TO SPECIFICATIONS, REFER TO PLANS FOR ELEVATIONS.
E -
6'-0"
5'-0"
8'-0"
2'-0"
GATE ON PLAYING FIELD SIDE TO OPEN TOWARDS HOME PLATE.
FIELD SIDE
D -
21'-0"
PITCHING MOUND IN BULLPEN SOFTBALL H -
INFIELD FINES OVER CLAY, TYP. K D4.1
7'-0" - 12'-0" TALL CHAIN LINK FENCE F D3.1
INFIELD/WARNING TRACK FINES L D4.1
PITCHING PLATE, TYP. REFER TO SPECIFICATIONS. REFER TO PLANS FOR ELEVATIONS
SYNTHETIC TURF NO INFILL H D2.1
12" WIDE EDGEBAND WITH FENCE C D2.2

C SOFTBALL DOUBLE BULLPEN - PLAN NTS

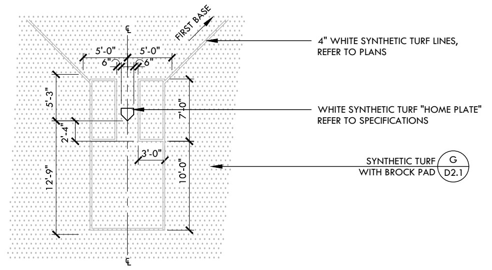
FIRST BASE
℄
5'-0"
5'-0"
6"
6"
5'-3"
2'-4"
12'-9"
7'-0"
3'-0"
10'-0"
℄
4" WHITE SYNTHETIC TURF LINES, REFER TO PLANS
WHITE SYNTHETIC TURF "HOME PLATE" REFER TO SPECIFICATIONS
SYNTHETIC TURF WITH BROCK PAD G D2.1

J HOME PLATE - SOFTBALL NTS

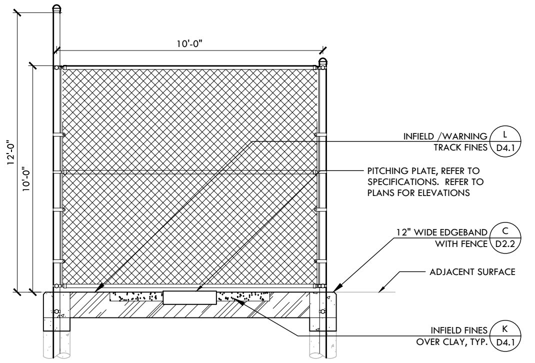
10'-0"
12'-0"
10'-0"
INFIELD /WARNING TRACK FINES L D4.1
PITCHING PLATE, REFER TO SPECIFICATIONS. REFER TO PLANS FOR ELEVATIONS
12" WIDE EDGEBAND WITH FENCE C D2.2
ADJACENT SURFACE
INFIELD FINES OVER CLAY, TYP. K D4.1

G SOFTBALL SINGLE BULLPEN - SECTION NTS

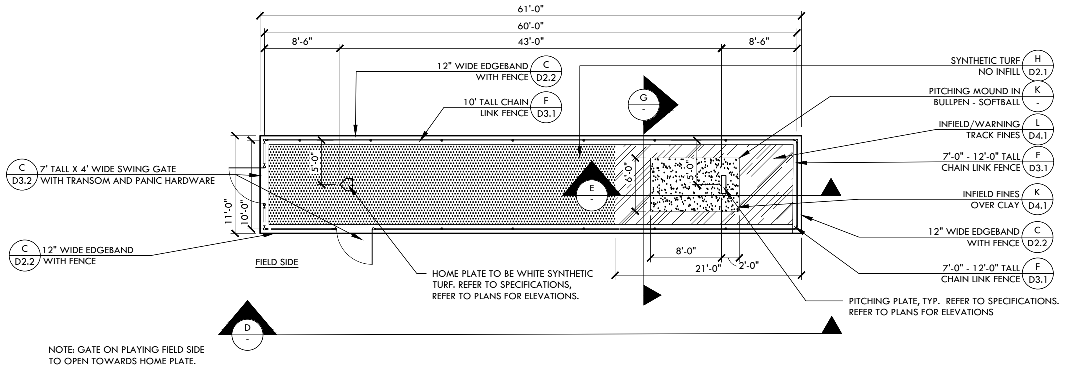
61'-0"
60'-0"
8'-6"
43'-0"
8'-6"
12" WIDE EDGEBAND WITH FENCE C D2.2
10' TALL CHAIN LINK FENCE F D3.1
G -
C D3.2 7' TALL X 4' WIDE SWING GATE WITH TRANSOM AND PANIC HARDWARE
11'-0"
10'-0"
5'-0"
E -
6'-0"
5'-0"
C D2.2 12" WIDE EDGEBAND WITH FENCE
FIELD SIDE
HOME PLATE TO BE WHITE SYNTHETIC TURF. REFER TO SPECIFICATIONS, REFER TO PLANS FOR ELEVATIONS.
8'-0"
21'-0"
2'-0"
D -
SYNTHETIC TURF NO INFILL H D2.1
PITCHING MOUND IN BULLPEN - SOFTBALL K -
INFIELD/WARNING TRACK FINES L D4.1
7'-0" - 12'-0" TALL CHAIN LINK FENCE F D3.1
INFIELD FINES OVER CLAY K D4.1
12" WIDE EDGEBAND WITH FENCE C D2.2
7'-0" - 12'-0" TALL CHAIN LINK FENCE F D3.1
PITCHING PLATE, TYP. REFER TO SPECIFICATIONS. REFER TO PLANS FOR ELEVATIONS

NOTE: GATE ON PLAYING FIELD SIDE TO OPEN TOWARDS HOME PLATE.

B SOFTBALL SINGLE BULLPEN - PLAN NTS

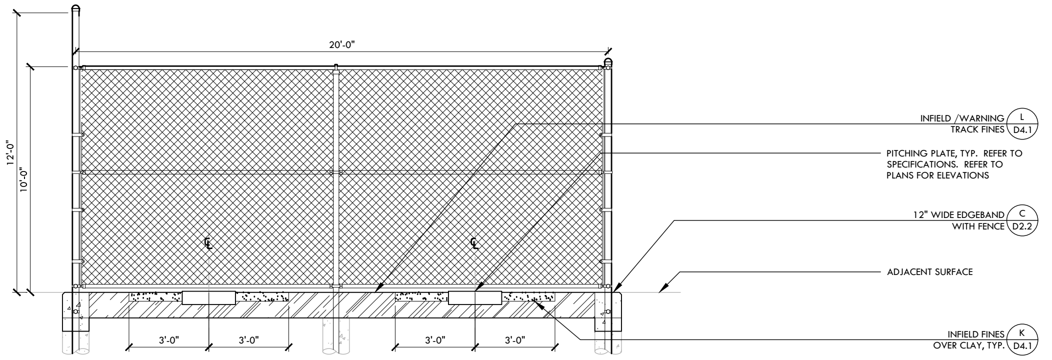
20'-0"
12'-0"
10'-0"
℄
℄
3'-0"
3'-0"
3'-0"
3'-0"
INFIELD /WARNING TRACK FINES L D4.1
PITCHING PLATE, TYP. REFER TO SPECIFICATIONS. REFER TO PLANS FOR ELEVATIONS
12" WIDE EDGEBAND WITH FENCE C D2.2
ADJACENT SURFACE
INFIELD FINES OVER CLAY, TYP. K D4.1

F SOFTBALL DOUBLE BULLPEN - SECTION NTS

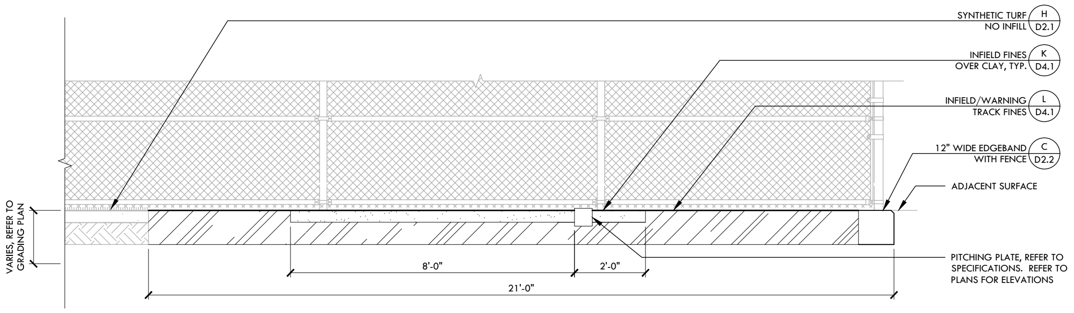
SYNTHETIC TURF NO INFILL H D2.1
INFIELD FINES OVER CLAY, TYP. K D4.1
INFIELD/WARNING TRACK FINES L D4.1
12" WIDE EDGEBAND WITH FENCE C D2.2
ADJACENT SURFACE
VARIES, REFER TO GRADING PLAN
8'-0"
2'-0"
21'-0"
PITCHING PLATE, REFER TO SPECIFICATIONS. REFER TO PLANS FOR ELEVATIONS

E SOFTBALL PITCHING PLATE - SECTION NTS

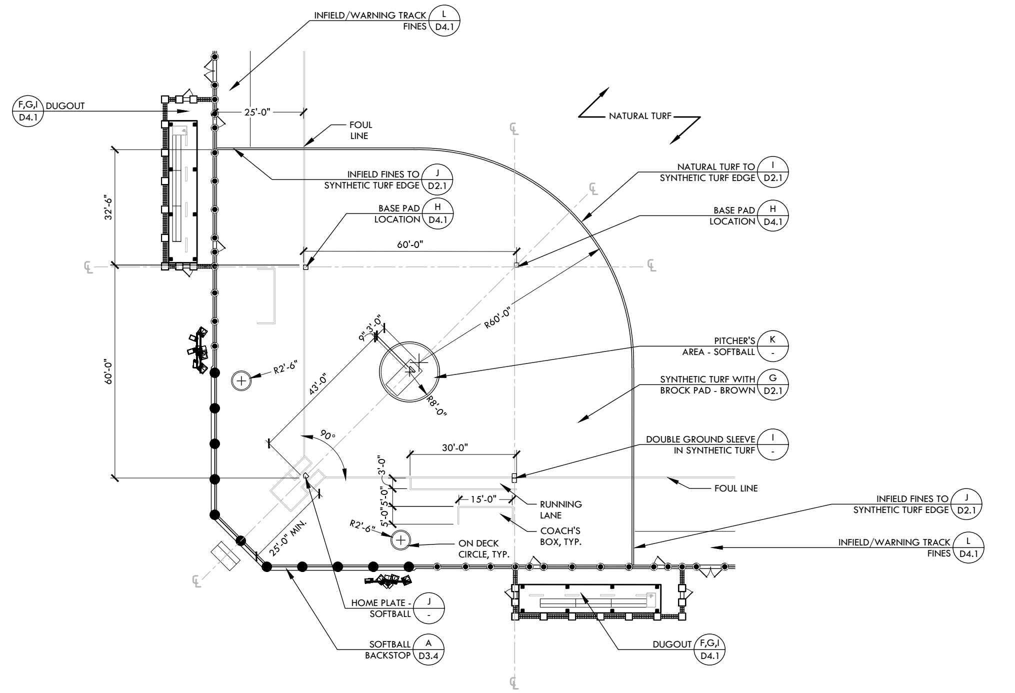
INFIELD/WARNING TRACK FINES L D4.1
F,G,I D4.1 DUGOUT
25'-0"
FOUL LINE
NATURAL TURF
INFIELD FINES TO SYNTHETIC TURF EDGE J D2.1
NATURAL TURF TO SYNTHETIC TURF EDGE I D2.1
BASE PAD LOCATION H D4.1
BASE PAD LOCATION H D4.1
32'-6"
60'-0"
℄
℄
℄
℄
R60'-0"
9"
3'-0"
R2'-6"
43'-0"
R8'-0"
PITCHER'S AREA - SOFTBALL K -
SYNTHETIC TURF WITH BROCK PAD - BROWN G D2.1
60'-0"
90°
30'-0"
DOUBLE GROUND SLEEVE IN SYNTHETIC TURF I -
3'-0"
5'-0"
5'-0"
15'-0"
FOUL LINE
RUNNING LANE
COACH'S BOX, TYP.
R2'-6"
ON DECK CIRCLE, TYP.
25'-0" MIN.
INFIELD FINES TO SYNTHETIC TURF EDGE J D2.1
INFIELD/WARNING TRACK FINES L D4.1
HOME PLATE - SOFTBALL J -
SOFTBALL BACKSTOP A D3.4
DUGOUT F,G,I D4.1

A SOFTBALL INFIELD NTS

IDENTIFICATION STAMP
DIV. OF THE STATE ARCHITECT
APP: 02-123587 INC:
REVIEWED FOR
SS ☑ FLS ☑ ACS ☑
DATE: 01/16/2026

VERDE DESIGN
LANDSCAPE ARCHITECTURE
CIVIL ENGINEERING
SPORT PLANNING & DESIGN
1843 Iron Point Rd. Suite 140
Folsom, CA 95630
tel: 916.415.6554
fax: 916.415.6525
www.VerdeDesignInc.com

STAMP

REGISTERED LANDSCAPE ARCHITECT
MARK S. BAGINSKI
No. 4089
Signature
EXPIRATION DATE:
JULY 2027
STATE OF CALIFORNIA

CONSULTANT

KEYMAP

SHEET TITLE

CONSTRUCTION
DETAILS -
SOFTBALL

PROJECT NAME

LODI HIGH SCHOOL
ATHLETIC FIELD
IMPROVEMENTS

PROJECT ADDRESS

3 S PACIFIC AVE
LODI, CA
95242

SUBMITTAL	DATE
50% DSA SUBMITTAL	07/31/25
100% DSA SUBMITTAL	09/25/25
DSA BACKCHECK SUBMITTAL	12/17/25
DSA BACKCHECK SUBMITTAL	01/08/26

NO.	REVISIONS	DATE
△		
△		
△		
△		
△		
△		

DRAWN BY: VDI
CHECKED BY: CS/MB
DATE ISSUED: 01/08/2026
SCALE: AS NOTED
PROJ. NO.: 2502700
SHEET NO.: D4.3

ALL IDEAS, DESIGNS, ARRANGEMENTS, AND PLANS INDICATED OR REPRESENTED BY THIS DRAWING ARE OWNED BY AND THE PROPERTY OF VERDE DESIGN, INC. AND WERE CREATED, EVOLVED, AND DEVELOPED FOR USE ON AND IN CONNECTION WITH THE SPECIFIED PROJECT. NONE OF SUCH IDEAS, DESIGNS, ARRANGEMENTS OR PLANS SHALL BE USED, REPRODUCED, OR PUBLISHED BY ANY METHOD, IN WHOLE OR IN PART, OR DISCLOSED TO ANY PERSON, FIRM, OR CORPORATION FOR ANY PURPOSE WHATSOEVER WITHOUT WRITTEN PERMISSION OF VERDE DESIGN, INC.

DRAWING NAME: Y:\Projects-FO\2025\2502700 - Lodi HS Baseball and Softball Field\CAD_DTL_ATH.dwg
PLOT DATE: 12-11-25 PLOTTED BY: station9

ALL IDEAS, DESIGNS, ARRANGEMENTS, AND PLANS INDICATED OR REPRESENTED BY THIS DRAWING ARE OWNED BY AND THE PROPERTY OF VERDE DESIGN, INC. AND WERE CREATED, EVOLVED, AND DEVELOPED FOR USE ON AND IN CONNECTION WITH THE SPECIFIED PROJECT. NONE OF SUCH IDEAS, DESIGNS, ARRANGEMENTS OR PLANS SHALL BE USED, REPRODUCED, OR PUBLISHED BY ANY METHOD, IN WHOLE OR IN PART, OR DISCLOSED TO ANY PERSON, FIRM, OR CORPORATION FOR ANY PURPOSE WHATSOEVER WITHOUT WRITTEN PERMISSION OF VERDE DESIGN, INC.

P

K

F

E

O

J

N

I

NOTES:
1. POLE = 8" HSS STEEL; MIN. YIELD STRENGTH = 35 KSI
2. MAX. SPACING = 24'-0" O.C. MAX.
3. STRUCTURAL STEEL = ASTM A-36
4. STEEL PIPE /TUBE = ASTM A-53 GRADE B
5. BOLTS = A-307
6. WIRE ROPE CLAMPS PER FEDERAL SPC FF-C-450, TYPE 1, CLASS 1
7. CABLE - ASTM A-603 7x19 GALVANIZED STEEL WIRE ROPE
8. SEWN PERIMETER MULTI-FILAMENT POLYPROPYLENE SOLID BRAID ROPE BOUND BORDER - 1/4" DIAMETER, 530 LB. MIN. BREAKING STRENGTH
9. NETTING FABRICATOR - SPORTSFIELD SPECIALTIES, INC.
ULTRA CROSS KNOTLESS DYNEEMA NETTING (BSSNUC), 1-3/4" SQUARE MESH SIZE, 95% OPEN MESH AREA, 58,445 PSI MIN. BREAKING STRENGTH, 30% MAX. ELONGATION AT BREAK
10. CONTRACTOR TO INSTALL PER MANUFACTURER'S INSTRUCTIONS AND RECOMMENDATIONS.
11. NO HOG RINGS ARE ALLOWED FOR CONNECTING NET TO CABLE. INSTALL PER THE DETAIL.

ELEVATION - END POLES

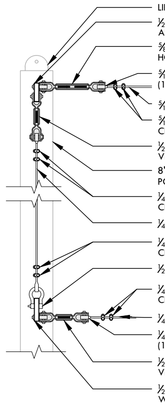
LIFTING TAB
1/2"x1-1/2" GALVANIZED STEEL EYE BOLT WITH SHOULDER, WASHERS AND NUT JAW & JAW TURNBUCKLE (1 EYE BOLT EACH END)
5/8"x12" GALVANIZED STEEL JAW & JAW TURNBUCKLE (1 PER HORIZONTAL RUN). HEAT SHRINK TUBING TO BE APPLIED, TYP.
5/16" HEAVY DUTY GALVANIZED STEEL WIRE ROPE THIMBLE (1 THIMBLE EACH END)
5/16" 7x19 GALVANIZED STEEL WIRE ROPE WITH PLAIN ENDS
5/16" HEAVY DUTY GALVANIZED STEEL FIST GRIP WIRE ROPE CLIPS (2 CLIPS EACH END)
1/2"x6" GALVANIZED STEEL JAW & JAW TURNBUCKLE (1 PER VERTICAL RUN). HEAT SHRINK TUBING TO BE APPLIED, TYP.
8" HSS STEEL POLE. POLES TO BE POWDERCOATED SILVADILLO. POLES TO RECEIVE TWO COAT POWDER COAT PROCESS.
1/4" HEAVY DUTY GALVANIZED STEEL FIST GRIP WIRE ROPE CLIPS (2 CLIPS EACH END)
1/4" 7x19 GALVANIZED STEEL WIRE ROPE WITH PLAIN ENDS
1/4" HEAVY DUTY GALVANIZED STEEL FIST GRIP WIRE ROPE CLIPS (2 CLIPS EACH END)
1/2" GALVANIZED STEEL SHACKLE ANCHOR (BOTTOM END ONLY)
1/4" HEAVY DUTY GALVANIZED STEEL FIST GRIPS WIRE ROPE CLIPS (2 CLIPS EACH END)
1/4" 7x19 GALVANIZED STEEL WIRE ROPE WITH PLAIN ENDS
1/4" HEAVY DUTY GALVANIZED STEEL WIRE ROPE THIMBLE (1 THIMBLE EACH END)
1/2"x6" GALVANIZED STEEL JAW & JAW TURNBUCKLE (1 PER VERTICAL RUN). HEAT SHRINK TUBING TO BE APPLIED, TYP.
1/2"x1-1/2" GALVANIZED STEEL EYE BOLT WITH SHOULDER, WASHERS, AND NUT (1 EYE BOLT EACH END)

ELEVATION - MIDDLE POLES

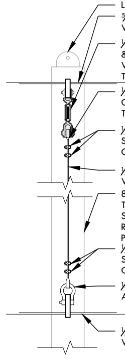
LIFTING TAB
5/16" 7x19 GALVANIZED STEEL WIRE ROPE WITH PLAIN ENDS
1/2"x6" GALVANIZED STEEL JAW & JAW TURNBUCKLE (1 PER VERTICAL RUN). HEAT SHRINK TUBING TO BE APPLIED, TYP.
1/4" HEAVY DUTY WIRE ROPE GALVANIZED STEEL THIMBLE (1 THIMBLE EACH END)
1/4" HEAVY DUTY GALVANIZED STEEL FIST GRIP WIRE ROPE CLIPS (2 CLIPS EACH END)
1/4" 7x19 GALVANIZED STEEL WIRE ROPE WITH PLAIN ENDS
8" HSS STEEL POLE. POLES TO BE POWDER COATED SILVADILLO. POLES TO RECEIVE TWO COAT POWDER COAT PROCESS
1/4" HEAVY DUTY GALVANIZED STEEL FIST GRIP WIRE ROPE CLIPS (2 CLIPS EACH END)
1/2" GALVANIZED STEEL SHACKLE ANCHOR (BOTTOM END ONLY)
1/4" 7x19 GALVANIZED STEEL WIRE ROPE WITH PLAIN ENDS

ELEVATION - NETTING AND CABLING

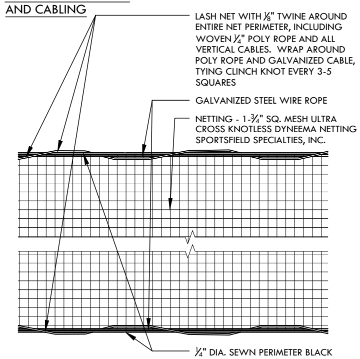
LASH NET WITH 1/8" TWINE AROUND ENTIRE NET PERIMETER, INCLUDING WOVEN 1/4" POLY ROPE AND ALL VERTICAL CABLES. WRAP AROUND POLY ROPE AND GALVANIZED CABLE, TYING CLINCH KNOT EVERY 3-5 SQUARES
GALVANIZED STEEL WIRE ROPE
NETTING - 1-3/4" SQ. MESH ULTRA CROSS KNOTLESS DYNEEMA NETTING - SPORTSFIELD SPECIALTIES, INC.
1/4" DIA. SEWN PERIMETER BLACK MULTI-FILAMENT POLYPROPYLENE SOLID BRAID ROPE WOVEN THROUGH EVERY 3-4 NET MESH SQUARES THROUGHOUT NET SYSTEM. NO HOG RINGS ARE ALLOWED FOR CONNECTING NET TO CABLE.

ELEVATION - NETTING SYSTEM

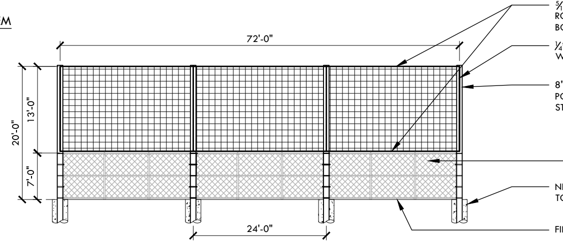
72'-0"
20'-0"
13'-0"
7'-0"
24'-0"
5/16" 7x19 GALVANIZED STEEL WIRE ROPE WITH PLAIN ENDS (TOP AND BOTTOM CABLE)
1/4" 7x19 GALVANIZED STEEL WIRE ROPE WITH PLAIN ENDS (VERTICAL CABLE)
8" HSS STEEL POLE. POLES TO BE POWDERCOATED SILVADILLO, REFER TO STRUCTURAL PLANS.
7'-0" - 12'-0" TALL CHAIN LINK FENCE
F
D3.1
NETTING FOOTING, REFER TO STRUCTURAL DRAWINGS
FINISH SURFACE, REFER TO PLANS

D 20'-0" TALL PROTECTIVE NETTING WITH 7' TALL FENCE NTS

M

H

NOT USED

C

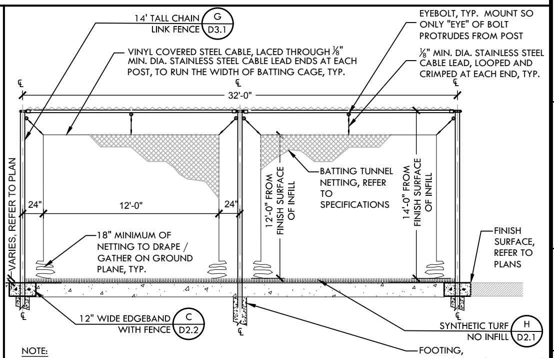
14' TALL CHAIN LINK FENCE
G
D3.1
VINYL COVERED STEEL CABLE, LACED THROUGH 1/8" MIN. DIA. STAINLESS STEEL CABLE LEAD ENDS AT EACH POST, TO RUN THE WIDTH OF BATTING CAGE, TYP.
EYEBOLT, TYP. MOUNT SO ONLY "EYE" OF BOLT PROTRUDES FROM POST
1/8" MIN. DIA. STAINLESS STEEL CABLE LEAD, LOOPED AND CRIMPED AT EACH END, TYP.
℄
32'-0"
VARIES, REFER TO PLAN
24"
12'-0"
24"
18" MINIMUM OF NETTING TO DRAPE / GATHER ON GROUND PLANE, TYP.
12'-0" FROM FINISH SURFACE OF INFILL
BATTING TUNNEL NETTING, REFER TO SPECIFICATIONS
14'-0" FROM FINISH SURFACE OF INFILL
FINISH SURFACE, REFER TO PLANS
12" WIDE EDGEBAND WITH FENCE
C
D2.2
SYNTHETIC TURF NO INFILL
H
D2.1
FOOTING, REFER TO STRUCTURAL PLANS S4.1

NOTE:
1. FENCE FABRIC TO BE ON THE INSIDE.
2. REFER TO STRUCTURAL DRAWINGS FOR MORE INFORMATION

B BATTING CAGE - SECTION NTS

L

G

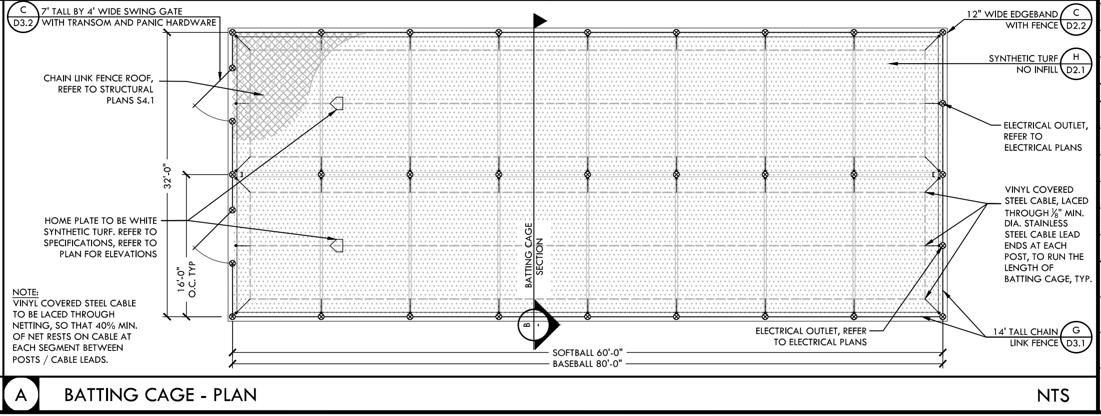
C
D3.2
7' TALL BY 4' WIDE SWING GATE WITH TRANSOM AND PANIC HARDWARE
CHAIN LINK FENCE ROOF, REFER TO STRUCTURAL PLANS S4.1
32'-0"
16'-0" O.C. TYP
HOME PLATE TO BE WHITE SYNTHETIC TURF. REFER TO SPECIFICATIONS, REFER TO PLAN FOR ELEVATIONS
BATTING CAGE SECTION
B
-
SOFTBALL 60'-0"
BASEBALL 80'-0"
ELECTRICAL OUTLET, REFER TO ELECTRICAL PLANS
12" WIDE EDGEBAND WITH FENCE
C
D2.2
SYNTHETIC TURF NO INFILL
H
D2.1
ELECTRICAL OUTLET, REFER TO ELECTRICAL PLANS
VINYL COVERED STEEL CABLE, LACED THROUGH 1/8" MIN. DIA. STAINLESS STEEL CABLE LEAD ENDS AT EACH POST, TO RUN THE LENGTH OF BATTING CAGE, TYP.
14' TALL CHAIN LINK FENCE
G
D3.1

NOTE:
VINYL COVERED STEEL CABLE TO BE LACED THROUGH NETTING, SO THAT 40% MIN. OF NET RESTS ON CABLE AT EACH SEGMENT BETWEEN POSTS / CABLE LEADS.

A BATTING CAGE - PLAN NTS

IDENTIFICATION STAMP
DIV. OF THE STATE ARCHITECT
APP: 02-123587 INC:
REVIEWED FOR
SS ☑ FLS ☑ ACS ☑
DATE: 01/16/2026

VERDE DESIGN
LANDSCAPE ARCHITECTURE
CIVIL ENGINEERING
SPORT PLANNING & DESIGN
1843 Iron Point Rd. Suite 140
Folsom, CA 95630
tel: 916.415.6554
fax: 916.415.6525
www.VerdeDesignInc.com

STAMP
MARK S. BAGINSKI
No. 4089
EXPIRATION DATE: JULY 2027

CONSULTANT

KEYMAP

SHEET TITLE
CONSTRUCTION DETAILS - ADDITIVE ALTERNATES

PROJECT NAME
LODI HIGH SCHOOL ATHLETIC FIELD IMPROVEMENTS

PROJECT ADDRESS
3 S PACIFIC AVE
LODI, CA
95242

SUBMITTAL	DATE
50% DSA SUBMITTAL	07/31/25
100% DSA SUBMITTAL	09/25/25
DSA BACKCHECK SUBMITTAL	12/17/25
DSA BACKCHECK SUBMITTAL	01/08/26

NO.	REVISIONS	DATE
△		
△		
△		
△		
△		
△		

DRAWN BY: VDI
CHECKED BY: CS/MB
DATE ISSUED: 01/08/2026
SCALE: AS NOTED
PROJ. NO.: 2502700
SHEET NO.: D4.4

NOT USED

R

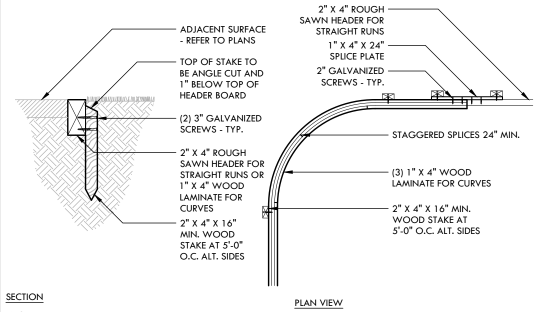
ADJACENT SURFACE - REFER TO PLANS
TOP OF STAKE TO BE ANGLE CUT AND 1" BELOW TOP OF HEADER BOARD
(2) 3" GALVANIZED SCREWS - TYP.
2" X 4" ROUGH SAWN HEADER FOR STRAIGHT RUNS OR 1" X 4" WOOD LAMINATE FOR CURVES
2" X 4" X 16" MIN. WOOD STAKE AT 5'-0" O.C. ALT. SIDES
2" X 4" ROUGH SAWN HEADER FOR STRAIGHT RUNS
1" X 4" X 24" SPLICE PLATE
2" GALVANIZED SCREWS - TYP.
STAGGERED SPLICES 24" MIN.
(3) 1" X 4" WOOD LAMINATE FOR CURVES
2" X 4" X 16" MIN. WOOD STAKE AT 5'-0" O.C. ALT. SIDES
SECTION
PLAN VIEW

NOTE:
1. USE CURVED DETAIL WHEN RADIUS IS LESS THAN 30' & BOARD LENGTH IS LESS THAN 16'.
2. ALL WOOD TO BE ROUGH SAWN REDWOOD CONST. GRADE.
3. FINISH GRADE OF PLANTING AREA TO BE 1" BELOW TOP OF HEADER.
4. TAPER FINISH GRADE FROM 1" AT HEADER TO 3" WITHIN 4'-0" OF HEADER BOARD, FOR 3" MULCH LAYER.

Q REDWOOD HEADER BOARD NTS

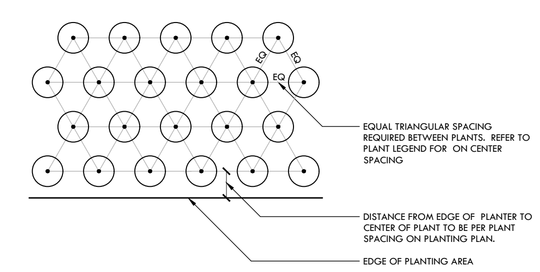
EQ
EQ
EQ
EQUAL TRIANGULAR SPACING REQUIRED BETWEEN PLANTS. REFER TO PLANT LEGEND FOR ON CENTER SPACING
DISTANCE FROM EDGE OF PLANTER TO CENTER OF PLANT TO BE PER PLANT SPACING ON PLANTING PLAN.
EDGE OF PLANTING AREA

P TRIANGULAR SPACING DIAGRAM NTS

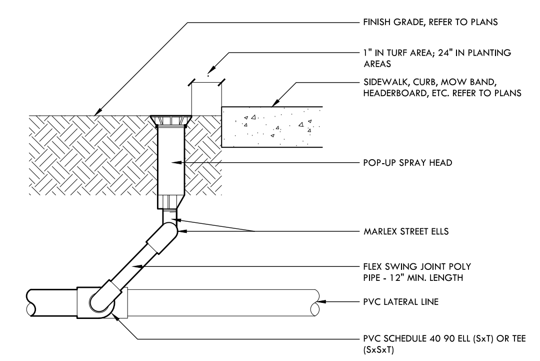
FINISH GRADE, REFER TO PLANS
1" IN TURF AREA; 24" IN PLANTING AREAS
SIDEWALK, CURB, MOW BAND, HEADERBOARD, ETC. REFER TO PLANS
POP-UP SPRAY HEAD
MARLEX STREET ELLS
FLEX SWING JOINT POLY PIPE - 12" MIN. LENGTH
PVC LATERAL LINE
PVC SCHEDULE 40 90 ELL (SxT) OR TEE (SxSxT)

O POP UP AND SWING JOINT NTS

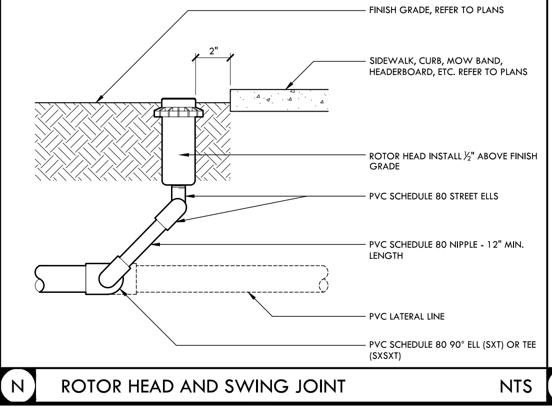
FINISH GRADE, REFER TO PLANS
2"
SIDEWALK, CURB, MOW BAND, HEADERBOARD, ETC. REFER TO PLANS
ROTOR HEAD INSTALL ½" ABOVE FINISH GRADE
PVC SCHEDULE 80 STREET ELLS
PVC SCHEDULE 80 NIPPLE - 12" MIN. LENGTH
PVC LATERAL LINE
PVC SCHEDULE 80 90° ELL (SXT) OR TEE (SXSXT)

N ROTOR HEAD AND SWING JOINT NTS

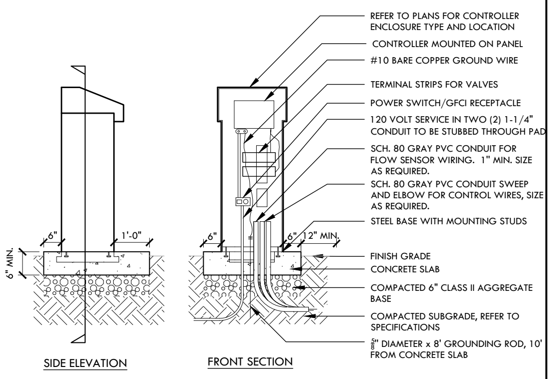
REFER TO PLANS FOR CONTROLLER ENCLOSURE TYPE AND LOCATION
CONTROLLER MOUNTED ON PANEL
#10 BARE COPPER GROUND WIRE
TERMINAL STRIPS FOR VALVES
POWER SWITCH/GFCI RECEPTACLE
120 VOLT SERVICE IN TWO (2) 1-1/4" CONDUIT TO BE STUBBED THROUGH PAD
SCH. 80 GRAY PVC CONDUIT FOR FLOW SENSOR WIRING. 1" MIN. SIZE AS REQUIRED.
SCH. 80 GRAY PVC CONDUIT SWEEP AND ELBOW FOR CONTROL WIRES, SIZE AS REQUIRED.
STEEL BASE WITH MOUNTING STUDS
FINISH GRADE
CONCRETE SLAB
COMPACTED 6" CLASS II AGGREGATE BASE
COMPACTED SUBGRADE, REFER TO SPECIFICATIONS
⅝" DIAMETER x 8' GROUNDING ROD, 10' FROM CONCRETE SLAB
6" MIN.
6"
1'-0"
6"
6"
12" MIN.
SIDE ELEVATION
FRONT SECTION

M PEDESTAL MOUNT CONTROLLER NTS

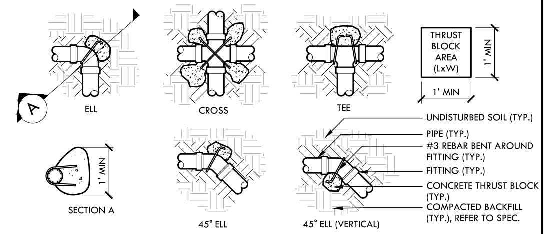
A
ELL
CROSS
TEE
THRUST BLOCK AREA (LxW)
1' MIN
1' MIN
UNDISTURBED SOIL (TYP.)
PIPE (TYP.)
#3 REBAR BENT AROUND FITTING (TYP.)
FITTING (TYP.)
CONCRETE THRUST BLOCK (TYP.)
COMPACTED BACKFILL (TYP.), REFER TO SPEC.
1' MIN
SECTION A
45° ELL
45° ELL (VERTICAL)

NOTES:
1. SUPPLY LINES 3" DIA. AND LARGER OR GATE VALVES 2½" OR LARGER SHALL RECEIVE CONCRETE THRUST BLOCKS.
2. MIN. THRUST BLOCK AREAS ARE BASE ON A SOIL BEARING CAPACITY OF 3000 LBS/SF.
3. THRUST BLOCK SHALL EXTEND INTO UNDISTURBED SOIL.
4. CONCRETE SHALL NOT COVER FITTING JOINTS.
5. MAIN LINE PIPING 6" AND LARGER SHALL HAVE DUCTILE IRON FITTINGS WITH JOINT RESTRAINTS INSTALLED AT ALL FLOW DIRECTION CHANGES (CONCRETE THRUST BLOCK NOT REQUIRED)

MINIMUM THRUST BLOCK AREA (LxW)

PIPE SIZE	IRRIGATION PIPE	
	TEE, DEAD END, 90° BEND	45°,22.5°
3"	1 SF	.5 SF
4"	2 SF	1 SF

L THRUST BLOCK NTS

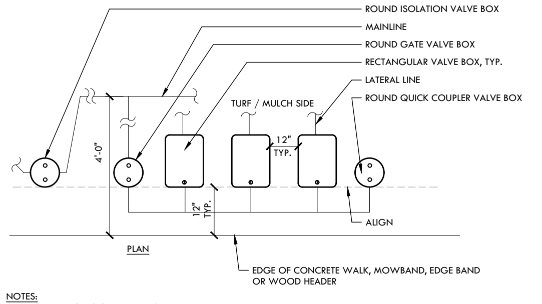
ROUND ISOLATION VALVE BOX
MAINLINE
ROUND GATE VALVE BOX
RECTANGULAR VALVE BOX, TYP.
LATERAL LINE
ROUND QUICK COUPLER VALVE BOX
TURF / MULCH SIDE
4'-0"
12" TYP.
12" TYP.
ALIGN
PLAN
EDGE OF CONCRETE WALK, MOWBAND, EDGE BAND OR WOOD HEADER

NOTES:
1. CENTER BOXES OVER VALVES.
2. ENSURE UNIONS ARE ACCESSIBLE.
3. SET BOXES PARALLEL TO EACH OTHER AND PERPENDICULAR TO EDGE.
4. TOP OF BOXES SET IN TURF SHALL BE FLUSH WITH TURF FINISH GRADE.
5. ALL CONTROL VALVE BOXES WITHIN A MANIFOLD ARE TO BE THE SAME SIZE AS THE LARGEST BOX NECESSARY FOR THE LARGEST CONTROL VALVE.

K VALVE BOX LAYOUT WITH GLOBE VALVES NTS

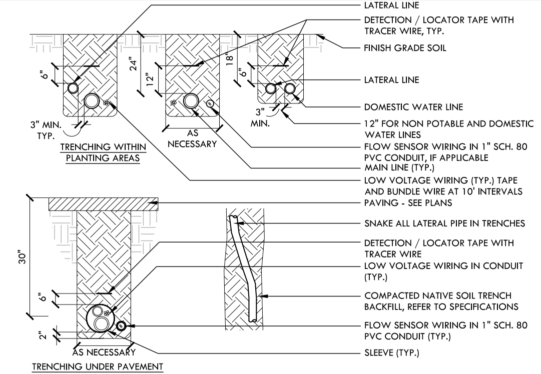
LATERAL LINE
DETECTION / LOCATOR TAPE WITH TRACER WIRE, TYP.
FINISH GRADE SOIL
LATERAL LINE
DOMESTIC WATER LINE
12" FOR NON POTABLE AND DOMESTIC WATER LINES
FLOW SENSOR WIRING IN 1" SCH. 80 PVC CONDUIT, IF APPLICABLE
MAIN LINE (TYP.)
LOW VOLTAGE WIRING (TYP.) TAPE AND BUNDLE WIRE AT 10' INTERVALS
PAVING - SEE PLANS
SNAKE ALL LATERAL PIPE IN TRENCHES
DETECTION / LOCATOR TAPE WITH TRACER WIRE
LOW VOLTAGE WIRING IN CONDUIT (TYP.)
COMPACTED NATIVE SOIL TRENCH BACKFILL, REFER TO SPECIFICATIONS
FLOW SENSOR WIRING IN 1" SCH. 80 PVC CONDUIT (TYP.)
SLEEVE (TYP.)
6"
24"
12"
18"
6"
3" MIN. TYP.
AS NECESSARY
3" MIN.
TRENCHING WITHIN PLANTING AREAS
30"
6"
2"
AS NECESSARY
TRENCHING UNDER PAVEMENT

J IRRIGATION PIPE TRENCHING NTS

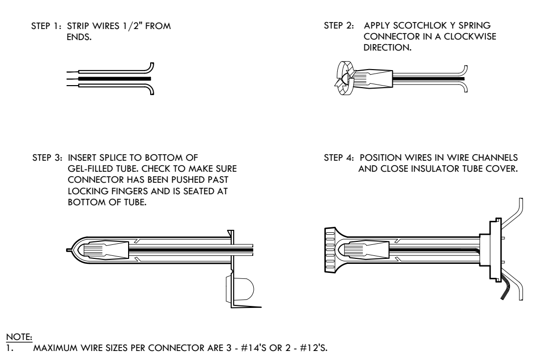

STEP 1: STRIP WIRES 1/2" FROM ENDS.

STEP 2: APPLY SCOTCHLOK Y SPRING CONNECTOR IN A CLOCKWISE DIRECTION.

STEP 3: INSERT SPLICE TO BOTTOM OF GEL-FILLED TUBE. CHECK TO MAKE SURE CONNECTOR HAS BEEN PUSHED PAST LOCKING FINGERS AND IS SEATED AT BOTTOM OF TUBE.

STEP 4: POSITION WIRES IN WIRE CHANNELS AND CLOSE INSULATOR TUBE COVER.

NOTE:
1. MAXIMUM WIRE SIZES PER CONNECTOR ARE 3 - #14'S OR 2 - #12'S.

I CONTROL WIRE CONNECTION NTS

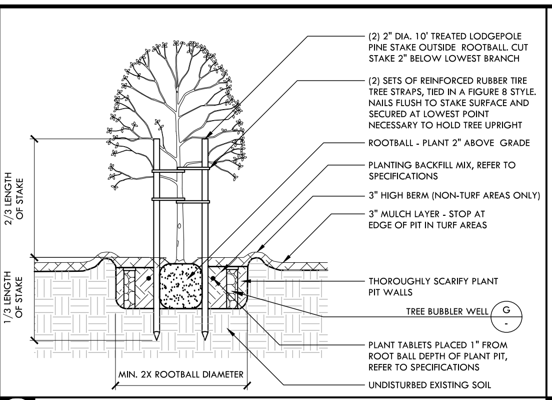
(2) 2" DIA. 10' TREATED LODGEPOLE PINE STAKE OUTSIDE ROOTBALL. CUT STAKE 2" BELOW LOWEST BRANCH
(2) SETS OF REINFORCED RUBBER TIRE TREE STRAPS, TIED IN A FIGURE 8 STYLE. NAILS FLUSH TO STAKE SURFACE AND SECURED AT LOWEST POINT NECESSARY TO HOLD TREE UPRIGHT
ROOTBALL - PLANT 2" ABOVE GRADE
PLANTING BACKFILL MIX, REFER TO SPECIFICATIONS
3" HIGH BERM (NON-TURF AREAS ONLY)
3" MULCH LAYER - STOP AT EDGE OF PIT IN TURF AREAS
THOROUGHLY SCARIFY PLANT PIT WALLS
TREE BUBBLER WELL
G
-
PLANT TABLETS PLACED 1" FROM ROOT BALL DEPTH OF PLANT PIT, REFER TO SPECIFICATIONS
UNDISTURBED EXISTING SOIL
2/3 LENGTH OF STAKE
1/3 LENGTH OF STAKE
MIN. 2X ROOTBALL DIAMETER

H TREE PLANTING AND BUBBLER NTS

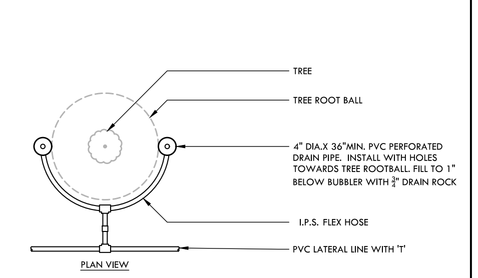
TREE
TREE ROOT BALL
4" DIA.X 36"MIN. PVC PERFORATED DRAIN PIPE. INSTALL WITH HOLES TOWARDS TREE ROOTBALL. FILL TO 1" BELOW BUBBLER WITH ¾" DRAIN ROCK
I.P.S. FLEX HOSE
PVC LATERAL LINE WITH 'T'
PLAN VIEW

TRUNK TO BUBBLER SPACING

SIZE	SPACING
15 GALLON TREE	15"
24" BOX TREE	20"
36" BOX TREE	25"

NOTE:
1. BUBBLERS ARE REQUIRED FOR TREES IN LAWN AND SHRUB AREA. TWO BUBBLERS PER TREE ARE TO BE PLACED ON OPPOSITE SIDES OF ROOTBALL. ORIENT BUBBLERS 180° FROM EACH OTHER.
2. USE PROPER RATED GLUE FOR I.P.S. FLEX HOSE.

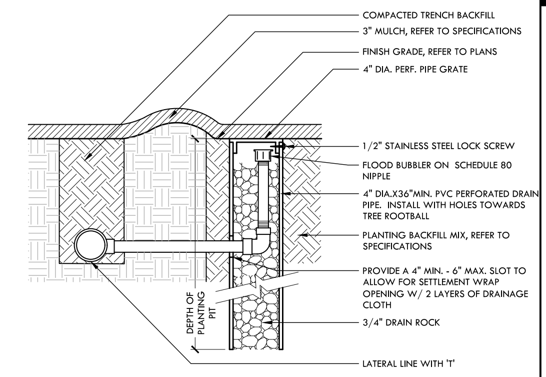
COMPACTED TRENCH BACKFILL
3" MULCH, REFER TO SPECIFICATIONS
FINISH GRADE, REFER TO PLANS
4" DIA. PERF. PIPE GRATE
1/2" STAINLESS STEEL LOCK SCREW
FLOOD BUBBLER ON SCHEDULE 80 NIPPLE
4" DIA.X36"MIN. PVC PERFORATED DRAIN PIPE. INSTALL WITH HOLES TOWARDS TREE ROOTBALL
PLANTING BACKFILL MIX, REFER TO SPECIFICATIONS
PROVIDE A 4" MIN. - 6" MAX. SLOT TO ALLOW FOR SETTLEMENT WRAP OPENING W/ 2 LAYERS OF DRAINAGE CLOTH
3/4" DRAIN ROCK
LATERAL LINE WITH 'T'
DEPTH OF PLANTING PIT

G TREE WELL BUBBLER NTS

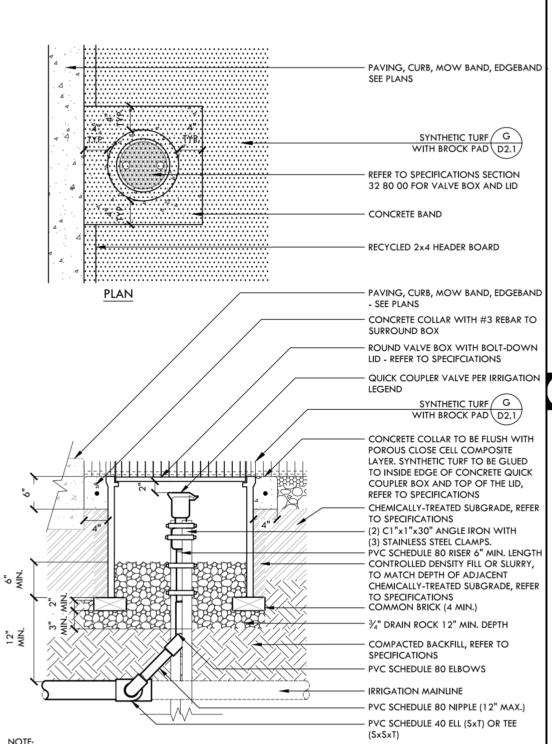
PAVING, CURB, MOW BAND, EDGEBAND SEE PLANS
SYNTHETIC TURF WITH BROCK PAD
G
D2.1
REFER TO SPECIFICATIONS SECTION 32 80 00 FOR VALVE BOX AND LID
CONCRETE BAND
RECYCLED 2x4 HEADER BOARD
4" TYP.
4" TYP.
4" TYP.
PLAN
PAVING, CURB, MOW BAND, EDGEBAND - SEE PLANS
CONCRETE COLLAR WITH #3 REBAR TO SURROUND BOX
ROUND VALVE BOX WITH BOLT-DOWN LID - REFER TO SPECIFCIATIONS
QUICK COUPLER VALVE PER IRRIGATION LEGEND
SYNTHETIC TURF WITH BROCK PAD
G
D2.1
CONCRETE COLLAR TO BE FLUSH WITH POROUS CLOSE CELL COMPOSITE LAYER. SYNTHETIC TURF TO BE GLUED TO INSIDE EDGE OF CONCRETE QUICK COUPLER BOX AND TOP OF THE LID, REFER TO SPECIFICATIONS
CHEMICALLY-TREATED SUBGRADE, REFER TO SPECIFICATIONS
(2) C1"x1"x30" ANGLE IRON WITH (3) STAINLESS STEEL CLAMPS.
PVC SCHEDULE 80 RISER 6" MIN. LENGTH
CONTROLLED DENSITY FILL OR SLURRY, TO MATCH DEPTH OF ADJACENT CHEMICALLY-TREATED SUBGRADE, REFER TO SPECIFICATIONS
COMMON BRICK (4 MIN.)
¾" DRAIN ROCK 12" MIN. DEPTH
COMPACTED BACKFILL, REFER TO SPECIFICATIONS
PVC SCHEDULE 80 ELBOWS
IRRIGATION MAINLINE
PVC SCHEDULE 80 NIPPLE (12" MAX.)
PVC SCHEDULE 40 ELL (SxT) OR TEE (SxSxT)
6"
2"
4"
4"
6" MIN.
2" MIN.
3" MIN.
12" MIN.

NOTE:
1. WHEN EXCAVATION FOR STRUCTURES IS PERFORMED WITHIN CHEMICALLY-TREATED AREAS, CONTRACTOR SHALL BACKFILL WITH NON-EXPANSIVE FILL OR CONTROLLED DENSITY FILL TO MATCH THE DEPTH OF ADJACENT CHEMICALLY-TREATED SUBGRADE, REFER TO SPECIFICATIONS.

F QUICK COUPLER IN SYNTHETIC TURF NTS

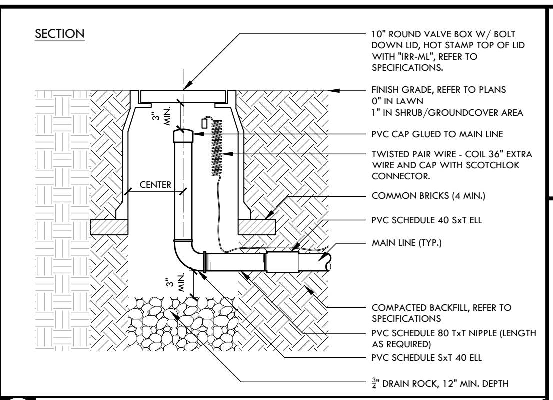
SECTION
10" ROUND VALVE BOX W/ BOLT DOWN LID, HOT STAMP TOP OF LID WITH "IRR-ML", REFER TO SPECIFICATIONS.
FINISH GRADE, REFER TO PLANS 0" IN LAWN 1" IN SHRUB/GROUNDCOVER AREA
PVC CAP GLUED TO MAIN LINE
TWISTED PAIR WIRE - COIL 36" EXTRA WIRE AND CAP WITH SCOTCHLOK CONNECTOR.
COMMON BRICKS (4 MIN.)
PVC SCHEDULE 40 SxT ELL
MAIN LINE (TYP.)
COMPACTED BACKFILL, REFER TO SPECIFICATIONS
PVC SCHEDULE 80 TxT NIPPLE (LENGTH AS REQUIRED)
PVC SCHEDULE SxT 40 ELL
¾" DRAIN ROCK, 12" MIN. DEPTH
3" MIN.
CENTER
3" MIN.

E IRRIGATION MAIN LINE CAP NTS

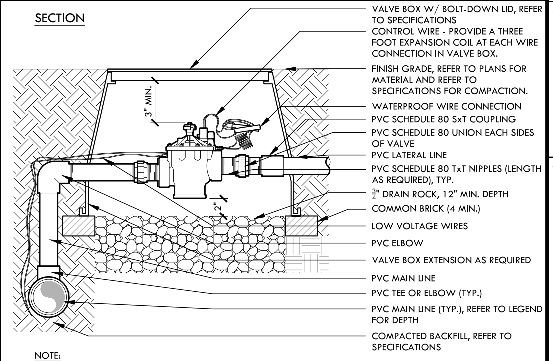
SECTION
VALVE BOX W/ BOLT-DOWN LID, REFER TO SPECIFICATIONS
CONTROL WIRE - PROVIDE A THREE FOOT EXPANSION COIL AT EACH WIRE CONNECTION IN VALVE BOX.
FINISH GRADE, REFER TO PLANS FOR MATERIAL AND REFER TO SPECIFICATIONS FOR COMPACTION.
WATERPROOF WIRE CONNECTION
PVC SCHEDULE 80 SxT COUPLING
PVC SCHEDULE 80 UNION EACH SIDES OF VALVE
PVC LATERAL LINE
PVC SCHEDULE 80 TxT NIPPLES (LENGTH AS REQUIRED), TYP.
¾" DRAIN ROCK, 12" MIN. DEPTH
COMMON BRICK (4 MIN.)
LOW VOLTAGE WIRES
PVC ELBOW
VALVE BOX EXTENSION AS REQUIRED
PVC MAIN LINE
PVC TEE OR ELBOW (TYP.)
PVC MAIN LINE (TYP.), REFER TO LEGEND FOR DEPTH
COMPACTED BACKFILL, REFER TO SPECIFICATIONS
3" MIN.
2"

NOTE:
VALVE TO HAVE 3" MIN. CLEARANCE FROM LID BOTTOM TO TOP OF VALVE STEM HANDLE.

D REMOTE CONTROL VALVE NTS

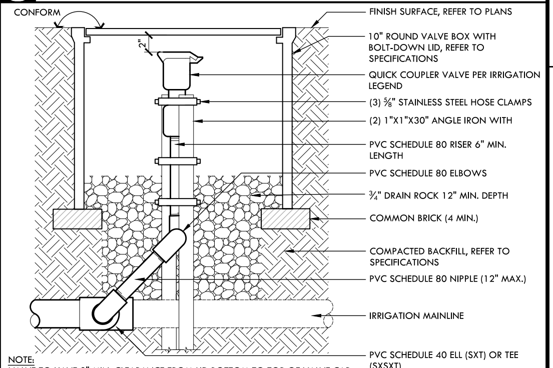
CONFORM
2"
FINISH SURFACE, REFER TO PLANS
10" ROUND VALVE BOX WITH BOLT-DOWN LID, REFER TO SPECIFICATIONS
QUICK COUPLER VALVE PER IRRIGATION LEGEND
(3) ⅝" STAINLESS STEEL HOSE CLAMPS
(2) 1"X1"X30" ANGLE IRON WITH
PVC SCHEDULE 80 RISER 6" MIN. LENGTH
PVC SCHEDULE 80 ELBOWS
¾" DRAIN ROCK 12" MIN. DEPTH
COMMON BRICK (4 MIN.)
COMPACTED BACKFILL, REFER TO SPECIFICATIONS
PVC SCHEDULE 80 NIPPLE (12" MAX.)
IRRIGATION MAINLINE
PVC SCHEDULE 40 ELL (SXT) OR TEE (SXSXT)

NOTE:
VALVE TO HAVE 2" MIN. CLEARANCE FROM LID BOTTOM TO TOP OF VALVE CAP.

C QUICK COUPLER VALVE NTS

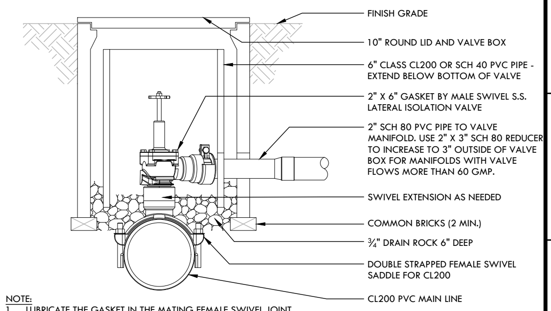
FINISH GRADE
10" ROUND LID AND VALVE BOX
6" CLASS CL200 OR SCH 40 PVC PIPE - EXTEND BELOW BOTTOM OF VALVE
2" X 6" GASKET BY MALE SWIVEL S.S. LATERAL ISOLATION VALVE
2" SCH 80 PVC PIPE TO VALVE MANIFOLD. USE 2" X 3" SCH 80 REDUCER TO INCREASE TO 3" OUTSIDE OF VALVE BOX FOR MANIFOLDS WITH VALVE FLOWS MORE THAN 60 GMP.
SWIVEL EXTENSION AS NEEDED
COMMON BRICKS (2 MIN.)
¾" DRAIN ROCK 6" DEEP
DOUBLE STRAPPED FEMALE SWIVEL SADDLE FOR CL200
CL200 PVC MAIN LINE

NOTE:
1. LUBRICATE THE GASKET IN THE MATING FEMALE SWIVEL JOINT AND THE INLET SPIGOT OF THE VALVE WITH PVC PIPE LUBRICANT.
2. ROTATE MALE THREAD "IN" UNTIL JOINT BOTTOMS OUT."
3. ROTATE MALE THREAD "OUT" TO PROPER HORIZONTAL ORIENTATION FOR VALVE UP TO AND NO MORE THAN 360°.
4. INSTALL BEVEL PIPE IN OUTLET BELL AFTER LUBRICATING OUTLET GASKET AND PIPE END. REMOVE WOOD WEDGE AND TIGHTEN RESTRAINT BOLT TO 35 FT-LBS.

B ANGLE ISOLATION VALVE NTS

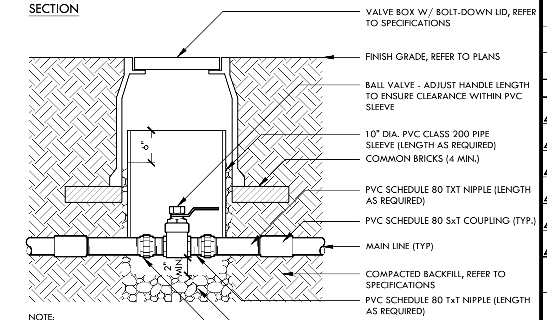
SECTION
VALVE BOX W/ BOLT-DOWN LID, REFER TO SPECIFICATIONS
FINISH GRADE, REFER TO PLANS
BALL VALVE - ADJUST HANDLE LENGTH TO ENSURE CLEARANCE WITHIN PVC SLEEVE
10" DIA. PVC CLASS 200 PIPE SLEEVE (LENGTH AS REQUIRED)
COMMON BRICKS (4 MIN.)
PVC SCHEDULE 80 TXT NIPPLE (LENGTH AS REQUIRED)
PVC SCHEDULE 80 SxT COUPLING (TYP.)
MAIN LINE (TYP)
COMPACTED BACKFILL, REFER TO SPECIFICATIONS
PVC SCHEDULE 80 TxT NIPPLE (LENGTH AS REQUIRED)
¾" DRAIN ROCK, 12" MIN. DEPTH, REFER TO SPECIFICATIONS
PVC SCHEDULE 80 UNIONS, EACH SIDE OF VALVE
6"
2" MIN

NOTE:
VALVE TO HAVE 3" MIN. CLEARANCE FROM LID BOTTOM TO TOP OF PVC PIPE SLEEVE

A BALL VALVE NTS

IDENTIFICATION STAMP
DIV. OF THE STATE ARCHITECT
APP: 02-123587 INC:
REVIEWED FOR
SS ☑ FLS ☑ ACS ☑
DATE: 01/16/2026

VERDE DESIGN
LANDSCAPE ARCHITECTURE
CIVIL ENGINEERING
SPORT PLANNING & DESIGN
1843 Iron Point Rd. Suite 140
Folsom, CA 95630
tel: 916.415.6554
fax: 916.415.6525
www.VerdeDesignInc.com

STAMP

MARK S. BAGINSKI
No. 4089
EXPIRATION DATE: JULY 2027

CONSULTANT

KEYMAP

SHEET TITLE
PLANTING AND IRRIGATION DETAILS

PROJECT NAME
LODI HIGH SCHOOL ATHLETIC FIELD IMPROVEMENTS

PROJECT ADDRESS
3 S PACIFIC AVE
LODI, CA
95242

SUBMITTAL	DATE
50% DSA SUBMITTAL	07/31/25
100% DSA SUBMITTAL	09/25/25
DSA BACKCHECK SUBMITTAL	12/17/25
DSA BACKCHECK SUBMITTAL	01/08/26

NO.	REVISIONS	DATE
△		
△		
△		
△		
△		
△		

DRAWN BY: VDI
CHECKED BY: CS/MB
DATE ISSUED: 01/08/2026
SCALE: AS NOTED
PROJ. NO.: 2502700
SHEET NO.: D5.1

ALL IDEAS, DESIGNS, ARRANGEMENTS, AND PLANS INDICATED OR REPRESENTED BY THIS DRAWING ARE OWNED BY AND THE PROPERTY OF VERDE DESIGN, INC. AND WERE CREATED, EVOLVED, AND DEVELOPED FOR USE ON AND IN CONNECTION WITH THE SPECIFIED PROJECT. NONE OF SUCH IDEAS, DESIGNS, ARRANGEMENTS OR PLANS SHALL BE USED, REPRODUCED, OR PUBLISHED BY ANY METHOD, IN WHOLE OR IN PART, OR DISCLOSED TO ANY PERSON, FIRM, OR CORPORATION FOR ANY PURPOSE WHATSOEVER WITHOUT WRITTEN PERMISSION OF VERDE DESIGN, INC.

ALL IDEAS, DESIGNS, ARRANGEMENTS, AND PLANS INDICATED OR REPRESENTED BY THIS DRAWING ARE OWNED BY AND THE PROPERTY OF VERDE DESIGN, INC. AND WERE CREATED, EVOLVED, AND DEVELOPED FOR USE ON AND IN CONNECTION WITH THE SPECIFIED PROJECT. NONE OF SUCH IDEAS, DESIGNS, ARRANGEMENTS OR PLANS SHALL BE USED, REPRODUCED, OR PUBLISHED BY ANY METHOD, IN WHOLE OR IN PART, OR DISCLOSED TO ANY PERSON, FIRM, OR CORPORATION FOR ANY PURPOSE WHATSOEVER WITHOUT WRITTEN PERMISSION OF VERDE DESIGN, INC.

K

G

J

F

I

E

H

D

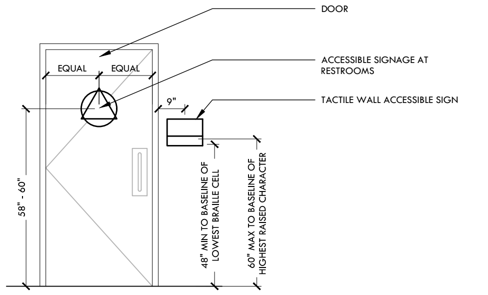
DOOR
ACCESSIBLE SIGNAGE AT RESTROOMS
TACTILE WALL ACCESSIBLE SIGN
EQUAL
EQUAL
9"
58" - 60"
48" MIN TO BASELINE OF LOWEST BRAILLE CELL
60" MAX TO BASELINE OF HIGHEST RAISED CHARACTER

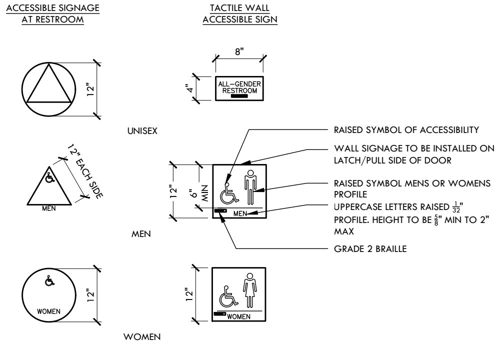
ACCESSIBLE SIGNAGE AT RESTROOM
TACTILE WALL ACCESSIBLE SIGN
8"
4"
ALL–GENDER RESTROOM
12"
UNISEX
12" EACH SIDE
MEN
12"
6" MIN
MEN
MEN
12"
WOMEN
12"
WOMEN
WOMEN
RAISED SYMBOL OF ACCESSIBILITY
WALL SIGNAGE TO BE INSTALLED ON LATCH/PULL SIDE OF DOOR
RAISED SYMBOL MENS OR WOMENS PROFILE
UPPERCASE LETTERS RAISED $\frac{1}{32}$" PROFILE. HEIGHT TO BE $\frac{5}{8}$" MIN TO 2" MAX
GRADE 2 BRAILLE

NOTES:

1. ALL SIGNAGE SHALL COMPLY WITH AMERICAN DISABILITIES ACT ACCESSIBILITY GUIDELINES AND CALIFORNIA TITLE 24
2. TACTILE WALL ACCESSIBLE SIGN SHALL BE LOCATED ALONGSIDE DOOR AT LATCH/PULL SIDE
3. VISUAL CHARACTERS, PICTOGRAMS AND SYMBOLS OF ACCESSIBILITY SHALL CONTRAST WITH THEIR BACKGROUND (EITHER LIGHT ON DARK FIELD, OR DARK ON LIGHT FIELD) SIGN SHALL HAVE NON-GLARE FINISH.
4. SIGNAGE SHALL BE DISTINCTLY DIFFERENT AND CONTRASTING FROM DOOR COLOR. TRIANGLE AND CIRCLE TO BE CONTRASTING COLORS WHEN STACKED ON ONE ANOTHER.

C ROOM SIGNAGE SYMBOLS NTS

TOILET - GRAB BARS - DISPENSER
11B-604 AND 11B-609

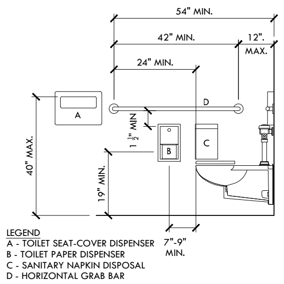
54" MIN.
42" MIN.
12". MAX.
24" MIN.
A
D
C
B
1 $\frac{1}{2}$" MIN
40" MAX.
19" MIN.
7"-9" MIN.

LEGEND
A - TOILET SEAT-COVER DISPENSER
B - TOILET PAPER DISPENSER
C - SANITARY NAPKIN DISPOSAL
D - HORIZONTAL GRAB BAR

D1 ACCESSIBLE TOILET COMPARTMENT SIDE ELEVATION

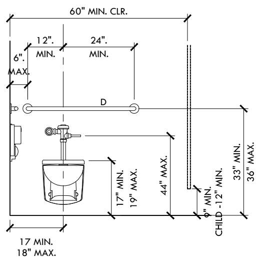
60" MIN. CLR.
12". MIN.
24". MIN.
6". MAX.
D
17" MIN.
19" MAX.
44" MAX.
9" MIN.
CHILD -12" MIN.
33" MIN.
36" MAX.
17 MIN.
18" MAX.

D2 ACCESSIBLE TOILET COMPARTMENT FRONT ELEVATION

LAVATORY - MIRROR
11B-603.3, 11B-606.3, 11B-306, 11B-309

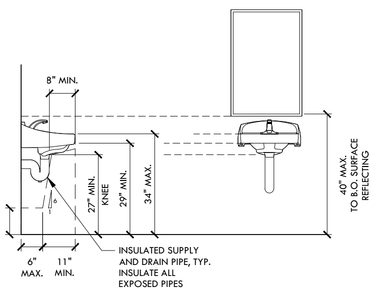
8" MIN.
9" MIN.
27" MIN. KNEE
29" MIN.
34" MAX.
6" MAX.
11" MIN.
INSULATED SUPPLY AND DRAIN PIPE, TYP. INSULATE ALL EXPOSED PIPES
40" MAX. TO B.O. SURFACE REFLECTING

D3 ACCESSIBLE LAVATORY SIDE AND FRONT ELEVATION

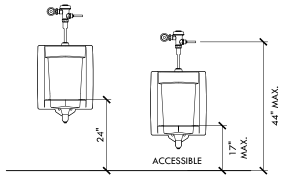
24"
ACCESSIBLE
17" MAX.
44" MAX.

URINALS
11B- 605.2

D4 HIGH/LOW URINALS

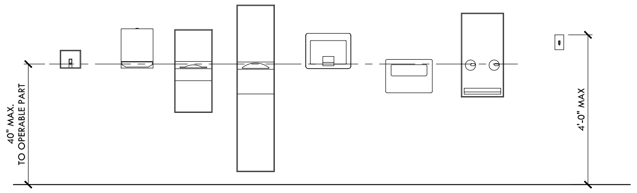
40" MAX. TO OPERABLE PART
4'-0" MAX

SOAP DISPENSER
11B-606.1

PAPER TOWEL WASTE RECEPTACLE
11B-606.1

ELECTRIC HAND DRYER
11B-606.1

SEAT COVER DISPENSER
11B-606.1

SANITARY DISPENSER
11B-606.1

LIGHT SWITCH
11B-205.1
11B-308.2
11B-308.3

D5 ACCESSORIES

B FIXTURE MOUNTING HEIGHTS NTS

COMPLIANT ENTRY DOOR PULL HARDWARE TO BE INSTALLED ON BOTH SIDES OF DOOR (11B-604.8.1.2)

MOVE TOILET PAPER DISPENSER SO IT IS CENTERED 7"-9" FROM THE FRONT EDGE OF THE FIXTURE (11B-604.7)

TOILET MUST BE CENTERED 16" MIN/18" MAX FROM THE NEAR SIDEWALL. MOVE THE FLOOR MOUNTED TOILET LATERALLY USING AN OFFSET FLANGE TO BE COMPLIANT WITH 11B-604.2

GRAB BAR ANCHORAGE TO BE COMPLIANT WITH IR 16-12. REVISE IF NECESSARY.

MOVE THE REAR GRAB BAR SO THAT IT EXTENDS 24" FROM THE CENTERLINE OF THE TOILET TOWARDS THE OPEN SIDE OF THE FIXTURE (11B-604.5.2). GRAB BAR ANCHORAGE TO COMPLY WITH IR 16-12

TOILET MUST BE CENTERED 16" MIN/18" MAX FROM THE NEAR SIDEWALL. MOVE THE FLOOR MOUNTED TOILET LATERALLY USING AN OFFSET FLANGE TO BE COMPLIANT WITH 11B-604.2

MOVE TOILET PAPER DISPENSER SO IT IS CENTERED 7"-9" FROM THE FRONT EDGE OF THE FIXTURE (11B-604.7)

GRAB BAR ANCHORAGE TO BE COMPLIANT WITH IR 16-12. REVISE IF NECESSARY.

ENTRY DOOR CLEAR WIDTH SHALL BE MODIFIED TO ENSURE MIN 32" WIDE DOOR OPENING (11B-604.8.2.2)

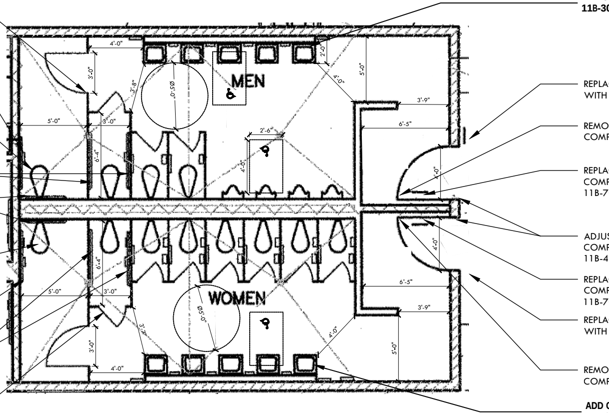
MEN
WOMEN
4'-0"
3'-0"
3'-8"
Ø5'-0"
5'-0"
3'-0"
6'-4"
2'-0"
4'-0"
5'-0"
3'-9"
6'-5"
2'-6"
4'-0"
4'-0"
4'-0"
6'-4"
5'-0"
3'-0"
3'-7"
Ø5'-0"
6'-5"
3'-9"
4'-0"
5'-0"
4'-0"

ADD CANE DECTION COMPLIANT WITH 11B-307

REPLACE BRAILLE SIGNAGE TO BE COMPLIANT WITH 11B-216.2 AND 11B-703.4.2

REMOVE DOOR KICKSTAND DEVICE TO BE COMPLIANT WITH 11B-404.2.10

REPLACE DOOR SIGNAGE TO BE COMPLIANT WITH 11B-703.7.2.6.1 AND 11B-703.7.2.6.1

ADJUST OR REPLACE DOOR CLOSER TO BE COMPLIANT WITH 11B-404.2.9 AND 11B-404.2.8.1

REPLACE DOOR SIGNAGE TO BE COMPLIANT WITH 11B-703.7.2.6.1 AND 11B-703.7.2.6.1

REPLACE BRAILLE SIGNAGE TO BE COMPLIANT WITH 11B-216.2 AND 11B-703.4.2

REMOVE DOOR KICKSTAND DEVICE TO BE COMPLIANT WITH 11B-404.2.10

ADD CANE DECTION COMPLIANT WITH 11B-307

NOTES:

1. REFER TO FIXTURE MOUNTING HEIGHTS DETAIL (THIS SHEET) FOR MORE INFORMATION
2. REFER TO ROOM SIGNAGE SYMBOLS DETAIL (THIS SHEET) FOR MORE INFORMATION

A EXISTING RESTROOM NTS

IDENTIFICATION STAMP
DIV. OF THE STATE ARCHITECT
APP: 02-123587 INC:
REVIEWED FOR
SS ☑ FLS ☑ ACS ☑
DATE: 01/16/2026

VERDE DESIGN
LANDSCAPE ARCHITECTURE
CIVIL ENGINEERING
SPORT PLANNING & DESIGN
1843 Iron Point Rd. Suite 140
Folsom, CA 95630
tel: 916.415.6554
fax: 916.415.6525
www.VerdeDesignInc.com

STAMP

MARK S. BAGINSKI
No. 4069
EXPIRATION DATE: JULY 2027

CONSULTANT

KEYMAP

SHEET TITLE
EXISTING RESTROOM
BUILDING DETAILS

PROJECT NAME
LODI HIGH SCHOOL
ATHLETIC FIELD
IMPROVEMENTS

PROJECT ADDRESS
3 S PACIFIC AVE
LODI, CA
95242

SUBMITTAL	DATE
50% DSA SUBMITTAL	07/31/25
100% DSA SUBMITTAL	09/25/25
DSA BACKCHECK SUBMITTAL	12/17/25

NO.	REVISIONS	DATE
△		
△		
△		
△		
△		
△		

DRAWN BY	CHECKED BY
VDI	CS/MB
DATE ISSUED	SCALE
12/17/2025	AS NOTED

PROJ. NO.
2502700

SHEET NO.
D6.1

EXISTING RESTROOM BUILDING DETAILS

DRAWING NAME: Y:\Projects-FO\2025\2502700 - Lodi HS Baseball and Softball Field\CAD_DTL-RR MOD.dwg
PLOT DATE: 01-06-26 PLOTTED BY: station23

GENERAL

1. ALL CONSTRUCTION SHALL COMPLY WITH THE PROVISIONS OF THE 2022 CALIFORNIA BUILDING CODE (CBC), TITLE 24, PART 2, VOLUMES 1–2 (2021 INTERNATIONAL BUILDING CODE (IBC) WITH 2022 CALIFORNIA AMENDMENTS, INCLUDING SECTIONS AND 'A' CHAPTERS PERTAINING TO DSA–SS).

2. ALL DISCREPANCIES SHALL BE BROUGHT TO THE ATTENTION OF THE STRUCTURAL ENGINEER FOR DIRECTION PRIOR TO PROCEEDING.

3. DETAILS OF CONSTRUCTION ARE TYPICAL, UNLESS NOTED OTHERWISE, AND SHALL APPLY AT ALL LOCATIONS OF SIMILAR CONSTRUCTION. TYPICAL DETAILS ARE NOT CUT AT EVERY APPLICABLE LOCATION ON THE PLANS.

4. DO NOT SCALE DRAWINGS FOR DIMENSIONAL INFORMATION.

5. SHORING, TEMPORARY BRACING AND OTHER METHODS AND MEANS OF CONSTRUCTION IS THE RESPONSIBILITY OF THE CONTRACTOR, AND IS NOT INCLUDED IN THE SCOPE OF THE STRUCTURAL DRAWINGS.

6. THE FOLLOWING NOTES ARE FOR GENERAL MATERIAL GRADES AND PROCEDURES. SEE SPECIFICATIONS AND REMAINDER OF DRAWINGS FOR COMPLETE REQUIREMENTS. ITEMS NOTED IN PLANS, SECTIONS AND DETAILS TAKE PRECEDENCE OVER GENERAL NOTES.

7. LOADS:
   - A) LIVE:
     ROOF: 20 PSF (REDUCIBLE)
   - B) WIND:
     EXPOSURE C, 95 MPH BASIC WIND SPEED; v(ASD) = 73.6 MPH
     DIRECTIONAL PROCEDURE
   - C) SEISMIC:
     BUILDING RISK CATEGORY II
     EQUIVALENT LATERAL FORCE PROCEDURE (ASCE 7–16 SECTION 12.8)
     LATITUDE: 38.1316, LONGITUDE: –121.2930
     SEISMIC DESIGN CATEGORY (SDC) D
     SITE CLASS D
     S_S=0.624, S_1=0.260; F_a=1.304, F_v=2.080;
     S_{MS}=0.813, S_{M1}=0.812; S_{DS}=0.542, S_{D1}=0.341
     IMPORTANCE FACTOR: I_e=1.00
     R=3 FOR SIGNS AND BILLBOARDS (FOUL POLE, FLAGPOLE)
     R=1.5 FOR STEEL POLES (NETTING)
     R=1.25 FOR ALL OTHER SELF–SUPPORTING STRUCTURES (NETTING, BATTING CAGE AND FENCE & GATE)
     C_S=0.181 (STRENGTH), 0.129 (ALLOWABLE STRESS) FOR SIGNS & BILLBOARDS
     C_S=0.361 (STRENGTH), 0.258 (ALLOWABLE STRESS) FOR STEEL POLES
     C_S=0.434 (STRENGTH), 0.310 (ALLOWABLE STRESS) FOR ALL OTHER STRUCTURES
     C_V=0.108 (STRENGTH), 0.077 (ALLOWABLE STRESS).
   - D) LOAD COMBINATIONS FOR DESIGN:
     CONCRETE: PER ASCE 7 SECTION 2.3 FOR STRENGTH DESIGN.
     FOUNDATIONS: PER CBC SECTION 1605A.2 FOR ALLOWABLE STRESS DESIGN.
     ALL OTHERS: PER ASCE 7 SECTION 2.4 FOR ALLOWABLE STRESS DESIGN.

STRUCTURAL ABBREVIATIONS

A.B.	ANCHOR BOLT	I.D.	INSIDE DIAMETER
ADJ	ADJACENT	IN	INCH
APPROX	APPROXIMATE	INT	INTERIOR
ARCH	ARCHITECTURAL		
		LAM	LAMINATE
BLDG	BUILDING	LBS	POUNDS
BLK	BLOCK		
BLKG	BLOCKING	KSI	KIPS PER SQ. IN.
BM	BEAM		
B.N.	BOUNDARY NAILING	MAX	MAXIMUM
BOT	BOTTOM	M.B.	MACHINE BOLT
BP	BASEPLATE	MECH	MECHANICAL
BRG	BEARING	MFR	MANUFACTURER
B.S.	BOTH SIDES	MIN	MINIMUM
		MISC	MISCELLANEOUS
C TO C	CENTER TO CENTER		
C.B.	CARRIAGE BOLT	<N>	NEW
CJ	CONTROL JOINT OR CONSTRUCTION JOINT	N.S.	NEAR SIDE
		N.I.C.	NOT IN CONTRACT
C.I.	CAST IRON	NO.	NUMBER
CL	CENTERLINE	NTS	NOT TO SCALE
CLG	CEILING		
CMU	CONCRETE MASONRY UNIT	O.C.	ON CENTER
COL	COLUMN	O.D.	OUTSIDE DIAMETER
CONC	CONCRETE	OPP	OPPOSITE
CONT	CONTINUOUS		
C.P.	COMPLETE PENETRATION	PERP	PERPENDICULAR
CTRD	CENTERED	PL	STEEL PLATE
CTSK	COUNTERSINK	P.P.	PARTIAL PENETRATION
		PLYWD	PLYWOOD
<D>	DEMO	PSF	POUNDS PER SQ. FT.
DBL	DOUBLE	PSI	POUNDS PER SQ. IN.
DIA OR ø	DIAMETER		
DIAG	DIAGONAL	RAD	RADIUS
DO	DITTO	REINF	REINFORCING
DWG	DRAWING	REQD	REQUIRED
		REV	REVISION
EA	EACH	R.O.	ROUGH OPENING
E.F.	EACH FACE	RWD	REDWOOD
ELEC	ELECTRICAL		
ELEV	ELEVATION	S.A.D	SEE ARCH'L DRAWINGS
E.N.	EDGE NAILING	S.M.D.	SEE MECH'L DRAWINGS
EQ	EQUAL	S.L.D.	SEE LANDSCAPE DRAWINGS
E.W.	EACH WAY	S.F.	SQUARE FEET
EXIST OR <E>	EXISTING	SIM	SIMILAR
EXTER	EXTERIOR	SPEC	SPECIFICATION
		SQ	SQUARE
<F>	FUTURE	STD	STANDARD
F.D.	FLOOR DRAIN	STGRD	STAGGERED
FHWS	FLAT HEAD WOOD SCREW	STIFF	STIFFENER
FIN	FINISH	SYM	SYMMETRICAL
F.O.B.	FACE OF BLOCK		
F.O.C.	FACE OF CONCRETE	T&G	TONGUE & GROOVE
F.O.F.	FACE OF FINISH	THRD	THREADED
F.O.S.	FACE OF STUD	T.O.C.	TOP OF CONCRETE
F.P.	FULL PENETRATION	T.O.F.	TOP OF FRAMING
F.S.	FAR SIDE	T.O.S.	TOP OF STEEL
FT	FOOT OR FEET	TS	TUBE STEEL
FTG	FOOTING	TYP	TYPICAL
GA	GAGE	U.N.O.	UNLESS NOTED OTHERWISE
GALV	GALVANIZED		
G.I.	GALVANIZED IRON	VERT	VERTICAL
GLB	GLUE–LAMINATED BEAM		
GYP.BD.	GYPSUM BOARD	W/	WITH
		W/O	WITHOUT
HDR	HEADER	WT	WEIGHT OR STEEL WT SECTION
HORIZ	HORIZONTAL		
HR	HOUR	WWF	WELDED WIRE FABRIC
H.S.	HIGH STRENGTH		
H.S.B.	HIGH STRENGTH BOLT		
HSS	HOLLOW STEEL SECTION		

GEOTECHNICAL & FOUNDATIONS

1. GEOTECHNICAL CRITERIA USED FOR FOUNDATION DESIGN:
   - A) GEOTECHNICAL REPORT BY RGI RANEY GEOTECHNICAL INC. WEST SACRAMENTO, CA. REPORT NO. 5812–002.00NP, DATED 05–20–25.
     GEOTECHNICAL REPORT SHALL BE CONSIDERED PART OF CONSTRUCTION DOCUMENTS. ALL RECOMMENDATIONS DESCRIBED THEREIN SHALL BE IMPLEMENTED IN PROJECT'S CONSTRUCTION, INCLUDING GRADING, STRIPPING OF EXISTING MATERIAL, LOCATION, TYPE AND INSTALLATION OF FILL MATERIAL, AND COMPACTION.
   - B) ALLOWABLE SOIL PRESSURES USED FOR FOUNDATION DESIGN:
     BACKSTOP POLES, FOUL POLES, FLAGPOLE, FENCE/GATE POSTS, ETC:
     PIER/PILE ALLOWABLE LATERAL PRESSURE: 200 PCF
     TOTAL LOAD W/ SEISMIC OR WIND: 267 PCF (200 + 1/3 INCREASE FOR SHORT TERM LOADS WHERE ALLOWED BY CODE.)
     IGNORE 1 FT. AT TOP. EFFECTIVE PIER WIDTH: 1 DIAMETER.
     MINIMUM PIER SPACING: 3 DIAMETERS
     MINIMUM PIER DIAMETER: 12"ø
     MINIMUM PIER DEPTH: 1'–6"
   - C) ENGINEERED FILL AND COMPACTION:
     PER GEOTECHNICAL REPORT RECOMMENDATIONS.

STRUCTURAL CONCRETE

1. ALL CONCRETE WORK SHALL CONFORM TO CHAPTER 19A OF THE 2022 CALIFORNIA BUILDING CODE (CBC) AND 2019 ACI STANDARD 318 AND ASTM C94, SPECIFICATION FOR READY–MIX CONCRETE. CEMENT SHALL BE PORTLAND CEMENT TYPE II AND SHALL COMPLY WITH ASTM C150. CALCIUM CHLORIDE SHALL NOT BE USED. COARSE AND FINE AGGREGATE SHALL COMPLY WITH ASTM C33. CONCRETE MIX DESIGNS SHALL BE SUBMITTED TO AND APPROVED BY TESTING AGENCY PRIOR TO ORDERING CONCRETE.

2. ALL STRUCTURAL CONCRETE MIXES SHALL HAVE MIN. FIVE (5) SACKS CEMENT PER CU. YARD AND MAX. WATER–TO–CEMENT RATIO OF 0.55 MAX. CONCRETE MIX PROPERTIES SHALL BE AS FOLLOWS:
   - A) C.I.D.H. PIER FOOTINGS:
     28–DAY COMP. STRENGTH: 3,000 PSI
     LARGE AGGREGATE SIZE: 1/2" – 1"
     MAX. SLUMP: 4"
     DENSITY: 145 – 150 PCF (NORMAL WEIGHT, HARD ROCK AGGREGATE)
     EXPOSURE CLASS: C1, S0 (ACI 318 TABLE 19.3.1.1)
   - B) NON–STRUCTURAL CONCRETE WALKS ON GRADE:
     28–DAY COMP. STRENGTH: 2,500 PSI
     LARGE AGGREGATE SIZE: 3/8" – 3/4"
     MAX. SLUMP: 5"
     DENSITY: 145 – 150 PCF (NORMAL WEIGHT, HARD ROCK AGGREGATE)

3. REBAR SHALL CONFORM TO ASTM A706 GRADE 60 OR ASTM A615 GRADE 60. ASTM A615 GRADE 60 REQUIRES 80,000 PSI MINIMUM TENSILE STRENGTH WITH 1.10 MINIMUM RATIO OF ACTUAL TENSILE STRENGTH TO ACTUAL YIELD STRENGTH BASED ON MILL TESTING.

4. GROUT SHALL BE NON–SHRINK GROUT U.N.O. CONFORMING TO ASTM C1107. GROUT SHALL HAVE A 7–DAY COMPRESSIVE STRENGTH 5,000 PSI MIN. GROUT SHALL BE MASTER BUILDERS "MASTERFLOW 928", SIKA SIKAGROUT 212, OR APPROVED EQUAL. FOLLOW MANUFACTURER'S SURFACE PREPARATION RECOMMENDATIONS.

5. BONDING AGENT SHALL BE MASTER BUILDERS "MASTEREMACO ADH 326", SIKA ARMATEC 110 EPOCEM, OR APPROVED EQUAL, AND SHALL BE APPLIED PER MANUFACTURER'S RECOMMENDATIONS.

6. CURING COMPOUND SHALL BE APPROVED BY ENGINEER, AND APPLIED PER MANUFACTURER'S RECOMMENDATIONS.

7. CONSTRUCTION JOINTS SHALL BE ROUGHENED TO FULL 1/4" AMPLITUDE (ICRI CSP 9) WITH BUSH HAMMER OR OTHER APPROVED METHOD. SURFACES SHALL BE CLEANED OF DUST AND DEBRIS IMMEDIATELY PRIOR TO PLACEMENT OF NEWER CONCRETE.

8. REINFORCING STEEL SHALL BE CONTINUOUS WHERE POSSIBLE. SPLICE WITH CONTACT LAP–SPLICES OR NON–CONTACT SPLICES. STAGGER ALL SPLICES. SPLICE LENGTHS SHALL BE 57 BAR–DIAMETERS MINIMUM. WELDED WIRE FABRIC SHALL BE LAPPED TWO (2) FULL SQUARES, BUT NOT LESS THAN 12".

9. EXTEND HORIZONTAL BARS IN FOUNDATIONS AND WALLS INTO INTERSECTING FOUNDATIONS AND WALLS WITH BEND AND 30 BAR DIAMETER EXTENSION, BUT NOT LESS THAN 24" EXTENSION.

10. WELDING OF REINFORCING SHALL NOT BE ALLOWED.

11. SEE STRUCTURAL STEEL NOTES FOR ANCHOR BOLTS CAST IN CONCRETE.

12. ANCHOR BOLT PROJECTION SHALL BE ADEQUATE FOR FULL ENGAGEMENT OF PLATES, WASHERS, NUTS, ETC. AND SHALL BE VERIFIED BY CONTRACTOR PRIOR TO PLACEMENT OF CONCRETE OR GROUT. ANCHOR BOLTS SHALL BE FIRMLY SECURED TO FORMS TO PREVENT THEIR MOVEMENT DURING CONCRETE PLACEMENT. WET–SETTING OF ANCHOR BOLTS IS NOT ALLOWED.

13. MAINTAIN THE FOLLOWING MINIMUM CONCRETE COVER FOR REBAR:
    WHERE CONC. IS PLACED AGAINST EARTH = 3"
    WHERE CONCRETE IS FORMED AND EXPOSED TO EARTH OR WEATHER = 2"
    WHERE CONCRETE IS NOT EXPOSED TO EARTH OR WEATHER = 1–1/2"
    SLABS ON GRADE = 1–1/2"

14. WHERE SIDES OF FOUNDATIONS (FOOTINGS, GRADE BEAMS OR WALLS) ARE CAST AGAINST EARTH WITHOUT FORMS, FOUNDATION SHALL BE WIDENED 1" AT EACH SUCH SURFACE.

15. EXCAVATION FOR FOOTINGS BELOW DEPTHS SHOWN ON DRAWINGS SHALL BE BACKFILLED WITH CONCRETE.

16. NOTIFY ENGINEER, PROJECT INSPECTOR, AND DSA–SS AT LEAST 48 HOURS BEFORE ANY CONCRETE IS TO BE PLACED OR FORMS CLOSED TO ALLOW FOR INSPECTION OF EXCAVATIONS AND REINFORCING PLACEMENT. SEE ALSO SPECIAL INSPECTION REQUIREMENTS.

17. CONTRACTOR SHALL, PRIOR TO EXCAVATION, VERIFY FOOTING CONDITIONS AND FINISH GRADE/PAVING ELEVATIONS AT PERIMETER OF BUILDING. VERIFY THAT FOOTINGS HAVE SPECIFIED MINIMUM DEPTH BELOW ADJACENT GRADE AND THAT FOOTINGS DO NOT "DAYLIGHT" OR OTHERWISE INTERFERE WITH INTENDED EXTERIOR CONDITIONS. NOTIFY ENGINEER IF SUCH INTERFERENCE EXISTS PRIOR TO EXCAVATION.

18. IF LOADING OF CONCRETE ELEMENTS PRIOR TO 28–DAY AGE IS ANTICIPATED, CONTRACTOR SHALL NOTIFY ENGINEER PRIOR TO SUBMITTAL OF CONCRETE MIX DESIGNS IN ORDER TO ALLOW SPECIFYING PROVISIONS FOR SUCH. PROVISIONS MAY INCLUDE COMPRESSION TEST CYLINDERS BE FIELD–CURED IN CONDITIONS MATCHING SUBJECT CONCRETE ELEMENTS, PLUS USE OF CEMENT TYPES AND/OR ADMIXTURES IN MIX DESIGNS TO PROVIDE THE REQUIRED COMPRESSIVE STRENGTHS AT ANTICIPATED AGES LESS THAN 28 DAYS. LOADING OF CONCRETE ELEMENTS BEFORE CURING FOR 28 DAYS WILL NOT BE APPROVED WITHOUT THESE PROVISIONS BEING SPECIFIED, AND MET BY CONTRACTOR.

19. BATCH PLANT INSPECTION:
    - A) AN APPROVED AGENCY SHALL CHECK THE FIRST BATCH AT THE START OF THE DAY TO VERIFY MATERIALS AND PROPORTIONS CONFORM TO THE APPROVED MIX DESIGN.
    - B) A LICENSED WEIGHTMASTER SHALL POSITIVELY IDENTIFY QUANTITY OF MATERIALS AND CERTIFY EACH LOAD BY A BATCH TICKET.
    - C) BATCH TICKETS, INCLUDING MATERIAL QUANTITIES AND WEIGHTS SHALL ACCOMPANY THE LOAD, SHALL BE TRANSMITTED TO THE INSPECTOR OF RECORD BY THE TRUCK DRIVE WITH LOAD IDENTIFIED THEREON. THE LOAD SHALL NOT BE PLACED WITHOUT BATCH IDENTIFYING THE MIX. THE INSPECTOR OF RECORD SHALL KEEP A DAILY RECORD OF PLACEMENTS, IDENTIFYING EACH TRUCK, ITS LOAD, AND TIME OF RECEIPT AT THE JOBSITE, AND APPROXIMATE LOCATION OF DEPOSIT IN THE STRUCTURE AND SHALL MAINTAIN A COPY OF THE DAILY RECORD AS REQUIRED BY THE ENFORCEMENT AGENCY.

CAST-IN-DRILLED-HOLE (CIDH) PIER FOUNDATIONS:

1. REBAR CAGES, EMBEDDED POLES (AS REQUIRED) AND CONCRETE SHALL BE INSTALLED IN DRILLED HOLES AS SOON AFTER EXCAVATION AS POSSIBLE. WHERE SOIL TYPES AND/OR WATER TABLE ELEVATIONS ARE EXPECTED TO RESULT IN CAVING OF DRILLED PIER HOLES, SLEEVING OF PIER HOLES OR OTHER MEANS OF MITIGATION SHALL BE EMPLOYED.

2. WHERE SLEEVING OF PIER HOLES IS EMPLOYED:
PIER HOLES ARE SLEEVED WITH TEMPORARY SLEEVE (TYPICALLY STEEL) THUS:
AFTER DRILLING TO DEPTH AND INSERTION OF SLEEVE, ACCUMULATED WATER AND CAVED SPOILS SHALL BE PUMPED OUT OF HOLE. REBAR CAGE AND EMBEDDED POLE (AS REQUIRED) SHALL BE INSTALLED AS SOON AFTER AS POSSIBLE, FOLLOWED BY PUMPING CONCRETE INTO EXCAVATION USING TREMIE WHERE DIRECTED BY GEOTECHNICAL ENGINEER. SLEEVE SHALL BE LIFTED FROM HOLE AS CONCRETE IS PLACED TO ALLOW CONCRETE TO FLOW TO SIDES OF EXCAVATION, DISPLACING ACCUMULATED WATER AS HOLE FILLS WITH CONCRETE. THIS PROCESS SHALL BE CONFIRMED BY GEOTECHNICAL ENGINEER, CONTRACTOR AND PROJECT INSPECTOR PRIOR TO PROCEEDING, AND SHALL BE INSPECTED BY GEOTECHNICAL ENGINEER AND LAB/SPECIAL INSPECTOR DURING ENTIRE PROCESS.

STRUCTURAL STEEL

1. ALL STEEL AND MISC. IRON SHALL BE FABRICATED AND ERECTED IN CONFORMANCE WITH AISC 360–16 SPECIFICATION FOR STRUCTURAL STEEL BUILDINGS.

2. STEEL MATERIAL SHALL BE AS FOLLOWS:
   PLATES, CHANNELS & ANGLES: ASTM A36 UNLESS NOTED OTHERWISE
   RECTANGULAR TUBES (TS OR HSS): ASTM A500 GRADE B, Fy=46 KSI
   STEEL POSTS SUPPORTING NETTING & METAL CHAIN–LINK FABRIC UP TO 10 FT. HIGH SHALL BE GALVANIZED PIPES COMPLYING WITH ASTM F1083, REGULAR GRADE 30 KSI YIELD STRENGTH, SCHEDULE 40. HOT–DIP ZINC GALVANIZING SHALL COMPLY WITH ASTM A123, WITH MIN. OF 1.8 OZ./SQ. FT. OUTSIDE AND INSIDE.
   STEEL POSTS SUPPORTING NETTING & METAL CHAIN–LINK FABRIC OVER 10 FT. HIGH SHALL BE GALVANIZED PIPES PER ASTM A53 (GR. B, Fy=35 KSI) OR ROUND TUBES PER ASTM A500 (GR. B., Fy=42 KSI) HOT–DIP ZINC GALVANIZED PER ASTM A123, WITH MIN. OF 1.8 OZ./SQ. FT. OUTSIDE AND INSIDE.
   MACHINE BOLTS (M.B.): ASTM A307 GRADE A, A563 FOR NUTS, F844 FOR WASHERS
   WELDING ELECTRODES: E70XX

3. ALL WELDING ON STRUCTURAL STEEL SHALL CONFORM WITH AWS D1.1 CODE AND SHALL BE PRE–QUALIFIED WELDS CONFORMING TO AWS D1.1. UNLESS SPECIFICALLY INDICATED AS FIELD WELDING, ALL WELDS MAY BE PERFORMED IN SHOP OR FIELD.

4. ALL COMPLETE AND FULL PENETRATION GROOVE WELDS (DESIGNATED BY "C.P." OR "F.P.") SHALL USE BACK–UP PLATES UNLESS NOTED OTHERWISE. ALL PARTIAL–PENETRATION WELDS (DESIGNATED BY "P.P.") SHALL HAVE LARGEST EFFECTIVE THROAT ALLOWED BY AWS. GROOVE WELDS NOT NOTED WITH "C.P.", "F.P." OR "P.P" SHALL BE COMPLETE PENETRATION WELDS.

5. WELDING PROCEDURE SPECIFICATIONS SHALL BE SUBMITTED TO THE ARCHITECT AND THE TEST AND INSPECTION AGENCY'S WELDING INSPECTOR FOR REVIEW AND APPROVAL PRIOR TO START OF FABRICATION.

6. MINIMUM SPACING OF ALL BOLTS, 7/8"ø AND SMALLER IN STEEL SHALL BE 3" o.c. AND THE MINIMUM EDGE DISTANCE FROM CENTERLINE OF HOLE TO EDGE OF PLATE OR MEMBER SHALL BE 1–1/2", UNLESS NOTED OTHERWISE ON DRAWINGS. WHERE BOLTS ARE INSTALLED THROUGH FLANGES OF "W" OR SIMILAR SHAPES, THE BOLT GAGE SHALL BE AS RECOMMENDED BY AISC.

7. HOLES FOR BOLTS IN STEEL SHALL BE 1/16" MAXIMUM LARGER IN DIAMETER THAN BOLTS. HOLES FOR ANCHOR BOLTS SHALL NOT BE MORE THAN 5/16" LARGER FOR A.B.'S UP TO 1"ø, AND NOT MORE THAN 1/2" LARGER FOR A.B.'S OVER 1"ø. ALL HOLES SHALL BE DRILLED OR PUNCHED. BURNING OF HOLES IS NOT ALLOWED, WHETHER IN FIELD OR SHOP.

8. ALL NON–PAINTED STEEL FASTENERS EXPOSED TO WEATHER OR IN UNENCLOSED SPACES SHALL BE HOT–DIPPED GALVANIZED, UNLESS NOTED OTHERWISE. GALVANIZED BOLTS AND NUTS SHALL BE PROVIDED BY SAME MANUFACTURER.

9. ALL STRUCTURAL STEEL SPECIFIED ON DRAWINGS TO BE GALVANIZED SHALL BE HOT–DIPPED ZINC GALVANIZED WITH MIN. 1.8 OZ./SQ. FT. ON ALL SURFACES. GALVANIZING SHALL BE TOUCHED UP AT FIELD–WELDED CONNECTIONS, FIELD–DRILLED HOLES, OR FIELD–CUT EDGES WITH A HIGH–ZINC DUST–CONTENT PAINT.

POST-INSTALLED ANCHORS & DOWELS

*****NOTE: POST–INSTALLED ANCHORS PROVIDED IN THE EVENT THAT REBAR OR CAST–IN–PLACE ANCHOR BOLTS ARE MISSED OR INCORRECTLY PLACED, CONTRACTOR SHALL NOTIFY PROJECT INSPECTOR & SEOR ENGINEER FOR DIRECTIONS PRIOR TO PROCEEDING WITH INSTALLATION.**

A. GENERAL – APPLICABLE TO ALL ANCHORS:

1. ANCHORS SHALL BE INSTALLED ONLY WHERE SPECIFIED ON DRAWINGS, PER MANUFACTURER'S INSTRUCTIONS, USING MANUFACTURER'S EQUIPMENT, WHERE APPLICABLE. INSTALLER SHALL HAVE ON SITE A COPY OF MANUFACTURER'S INSTALLATION INSTRUCTIONS AND ICC–ES OR IAPMO–UES REPORT.

2. ANCHORS SHALL BE INSTALLED ONLY INTO CURED CONCRETE OR MASONRY GROUT THAT HAS ATTAINED THE MIN. DESIGN COMPRESSIVE STRENGTH AT MIN. 28 DAY AGE, EXCEPT AS NOTED BELOW FOR ADHESIVE ANCHORS. IF INSTALLATION OF ANCHORS INTO CONCRETE OR MASONRY ELEMENTS PRIOR TO 28–DAY AGE IS ANTICIPATED, CONTRACTOR SHALL NOTIFY ENGINEER PRIOR TO INSTALLATION IN ORDER TO ALLOW SPECIFYING PROVISIONS FOR SUCH. PROVISIONS MAY INCLUDE COMPRESSION TEST CYLINDERS BE FIELD–CURED IN CONDITIONS MATCHING SUBJECT CONCRETE OR MASONRY ELEMENTS, PLUS USE OF CEMENT TYPES AND/OR ADMIXTURES IN MIX DESIGNS TO PROVIDE THE REQUIRED COMPRESSIVE STRENGTHS AT ANTICIPATED AGES LESS THAN 28 DAYS. INSTALLATION OF ANCHORS INTO CONCRETE OR MASONRY GROUT BEFORE CURING FOR 28 DAYS WILL NOT BE APPROVED WITHOUT THESE PROVISIONS BEING SPECIFIED, AND MET BY CONTRACTOR.

3. WHERE POST–INSTALLED ANCHORS ARE USED TO MITIGATE OMITTED OR MISPLACED CAST–IN–PLACE ANCHORS, ADDED SPECIAL INSPECTION AND TESTING COSTS ASSOCIATED WITH THE POST–INSTALLED ANCHORS WILL BE PAID FOR BY THE DISTRICT, HOWEVER, SUCH COSTS WILL BE BACK–CHARGED TO THE CONTRACTOR.

4. PRIOR TO DRILLING HOLES FOR ANY POST–INSTALLED ANCHORS INTO NEW OR EXISTING CONCRETE OR MASONRY, ALL REINFORCING BARS IN AREA OF NEW ANCHORAGE HOLES SHALL BE LOCATED WITH PACHOMETER OR OTHER SUITABLE DEVICE AND CLEARLY MARKED IN THE FIELD. NEW ANCHORS SHALL BE INSTALLED NOT LESS THAN 1" CLEAR FROM REINFORCING. WHERE REINFORCING BARS CANNOT BE LOCATED, CARE SHALL BE TAKEN WHILE DRILLING HOLES SO THAT REINFORCING BARS ARE NOT CUT OR DAMAGED AND HOLES SHALL BE REPAIRED & RELOCATED AS REQUIRED. USE OF DRILLS WITH GROUND FAULT INTERRUPTERS (GFI) IS RECOMMENDED.

5. PROVIDE TESTING AND INSPECTIONS OF ANCHOR INSTALLATIONS PER TESTING AND SPECIAL INSPECTION NOTES, THIS SHEET.

6. ANCHORS OTHER THAN THOSE SPECIFIED BELOW MAY BE USED ONLY WHEN CURRENT ICC–ES OR IAPMO–UES REPORT FOR SUCH IS SUBMITTED FOR REVIEW AND APPROVAL IN WRITING. ANCHORS SHALL NOT BE INSTALLED UNTIL ANCHORS ARE APPROVED BY STRUCTURAL ENGINEER AND DSA, AND TEST LOADS ARE DETERMINED AND ISSUED.

7. ANCHORS IN CONTACT WITH PRESERVATIVE–TREATED AND FIRE–RETARDANT–TREATED WOOD SHALL BE OF HOT–DIPPED ZINC–COATED GALVANIZED STEEL OR STAINLESS STEEL. ANCHORS EXPOSED TO WEATHER OR REQUIRED TO BE CORROSION RESISTANT SHALL BE OF HOT–DIPPED ZINC–COATED GALVANIZED STEEL OR STAINLESS STEEL.

B. EXPANSION ANCHORS:

1. EXPANSION ANCHORS SHALL BE WEDGE TYPE ANCHORS ONLY AND SHALL HAVE ICC–ES OR IAPMO–UES APPROVAL, INCLUDING APPROVAL FOR RESISTANCE TO SEISMIC AND WIND LOADS, PASSING ICC–ES CRITERIA AC193 (CONCRETE) & AC01 (MASONRY). USE ONE OF THE FOLLOWING ICC–ES OR IAPMO–UES APPROVED SYSTEMS:
   CONCRETE:
   - a) HILTI KWIK BOLT TZ2 (ESR–4266), (TYP. ANCHOR SPECIFIED U.N.O.)
   - b) SIMPSON STRONG–BOLT 2 ANCHORS (ESR–3037),
   - c) DEWALT/POWERS POWER–STUD+ SD2, SD4 & SD6 ANCHORS (ESR–2502).

NOTE: OTHER EXPANSION ANCHORS MAY BE USED ONLY WHEN ICC–ES OR IAPMO–UES REPORT FOR SUCH IS SUBMITTED TO AND APPROVED BY ENGINEER AND DSA AND TEST LOADS ARE DETERMINED AND ISSUED.

2. EXPANSION ANCHORS SHALL HAVE EMBEDMENT NOT LESS THAN EIGHT (8) ANCHOR DIAMETERS, OR AS OTHERWISE SPECIFIED IN DETAILS. TORQUE ANCHORS DURING INSTALLATION TO THE RECOMMENDED INSTALLATION TORQUE VALUES SPECIFIED IN MANUFACTURER'S ICC–ES OR IAPMO–UES REPORT.

C. CHEMICAL ADHESIVE ANCHORS AND DOWELS:

1. ALL THREADED RODS AND REBAR DOWELS INSTALLED IN HARDENED CONCRETE OR MASONRY GROUT WITH "ADHESIVE" SHALL BE A TWO–PART NOZZLE–MIXED ICC–ES OR IAPMO–UES APPROVED CHEMICAL ADHESIVE SYSTEM, PASSING ICC–ES CRITERIA AC308 (CONCRETE) & AC58 (MASONRY). USE ONE OF THE FOLLOWING ICC–ES OR IAPMO–UES APPROVED SYSTEMS:
   CONCRETE:
   - a) HILTI "HIT–RE 500–V3" ADHESIVE ANCHOR SYSTEM (ESR–3814), (SPECIFIED U.N.O.)
   - b) SIMPSON "SET–XP" ADHESIVE ANCHOR SYSTEM (ESR–2508),
   - c) DEWALT/POWERS "PURE110+" ADHESIVE ANCHOR SYSTEM (ESR–3298),
   - d) ITW RED HEAD "C6+" ADHESIVE ANCHOR SYSTEM (ESR–4046).

NOTE: OTHER CHEMICAL ADHESIVE ANCHOR SYSTEMS MAY BE USED ONLY WHEN ICC–ES OR IAPMO–UES REPORT FOR SUCH IS SUBMITTED TO AND APPROVED BY ENGINEER AND DSA AND TEST LOADS ARE DETERMINED AND ISSUED.

2. ANCHORS SHALL BE INSTALLED ONLY INTO CURED CONCRETE OR MASONRY GROUT OF MIN. 21 DAY AGE. IF INSTALLATION OF ANCHORS INTO CONCRETE OR MASONRY ELEMENTS PRIOR TO 21–DAY AGE IS ANTICIPATED, CONTRACTOR SHALL NOTIFY ENGINEER PRIOR TO INSTALLATION FOR DIRECTION.

3. INSTALLATION OF CHEMICAL ADHESIVE ANCHORS IN HORIZONTAL OR OVERHEAD APPLICATIONS SHALL BE INSTALLED BY AN ACI/CSRI CERTIFIED ADHESIVE ANCHOR INSTALLER.

4. HOLES SHALL BE DRILLED 1/8" TO 1/4" LARGER IN DIAMETER THAN ROD OR BAR OUTER DIAMETER, AS SPECIFIED IN ICC–ES OR IAPMO–UES REPORT.

5. BARS/RODS SHALL HAVE EMBEDMENT IN ADHESIVE NOT LESS THAN TEN (10) NOMINAL BAR/ROD DIAMETERS IN CONCRETE AND NINE (9) NOMINAL BAR/ROD DIAMETERS IN MASONRY, OR AS OTHERWISE SPECIFIED IN DETAILS.

6. INSTALLATION TORQUE FOR ALL ANCHORS SHALL BE REDUCED ACCORDING TO MANUFACTURER'S RECOMMENDATION DUE TO THE VICINITY OF ANCHOR TO EDGE OF CONCRETE.

7. THE BOND STRESSES AS SPECIFIED IN ICC–ES OR IAPMO–UES REPORT SHALL BE BASED ON LONG TERM ELEVATED TEMPERATURES OF NOT LESS THAN 110 DEGREES F.

TESTING AND SPECIAL INSPECTIONS

1. GENERAL
   - A) ALL TESTS AND SPECIAL INSPECTIONS SHALL CONFORM TO APPLICABLE REQUIREMENTS OF 2022 CALIFORNIA BUILDING CODE (CBC) CHAPTER 17A AND APPROVED FORM DSA–103, "LISTING OF STRUCTURAL TESTS AND SPECIAL INSPECTIONS."
   - B) ALL TESTS OF MATERIALS AND TESTING LABORATORY SHALL BE IN ACCORDANCE WITH 2022 CALIFORNIA ADMINISTRATIVE CODE (CAC) SECTION 4–335.
   - C) THE OWNER SHALL EMPLOY AND PAY THE INSPECTION/TESTING LABORATORY. COSTS OF RE–TESTING MAY BE BACK–CHARGED TO THE CONTRACTOR.
   - D) INSPECTOR SHALL BE APPROVED BY DSA. INSPECTIONS SHALL BE IN ACCORDANCE WITH CAC SECTION 4–333(b), AND THE DUTY OF THE INSPECTOR SHALL BE IN ACCORDANCE WITH CAC SECTION 4–342.
   - E) COPIES OF ALL TEST/INSPECTION REPORTS SHALL BE SUBMITTED TO ARCHITECT, STRUCTURAL ENGINEER, PROJECT INSPECTOR. AND DSA–SSS.

2. FOUNDATIONS (DRILLED PIERS, FOOTINGS, GRADE BEAMS), WALLS AND SLABS–ON–GRADE:
   - A) NOTIFY ENGINEER AND PROJECT INSPECTOR 48 HOURS BEFORE CONCRETE IS TO BE PLACED OR FORMS CLOSED TO ALLOW FOR INSPECTION OF EXCAVATIONS AND REINFORCING PLACEMENT.
   - B) SPECIAL INSPECTION IS REQUIRED PER CBC SECTION 1705A.3, 1705A.6 & 1705A.8.
   - C) THE TESTING AGENCY SHALL PERFORM THE FOLLOWING:
     - * REVIEW ALL CONCRETE MIX DESIGNS. ALL DESIGNS SHALL BE SUBMITTED TO AND APPROVED BY TESTING AGENCY PRIOR TO ORDERING CONCRETE.
     - * FOR EACH CONCRETE MIX PLACED, AGENCY SHALL CAST (4) TEST CYLINDERS IN ACCORDANCE WITH ASTM C31 FOR EACH 50 CUBIC YARDS OR 2000 SQUARE FEET, OR FRACTION THEREOF, OF CONCRETE PLACED EACH DAY, AND TRANSPORT CYLINDERS TO LAB. TEST CYLINDERS IN ACCORDANCE WITH ASTM C39. TEST (1) CYLINDER AT 7 DAYS AND (2) CYLINDERS AT 28 DAYS. HOLD LAST TEST CYLINDER FOR 60 DAYS.
     - * INSPECT FINAL PLACEMENT OF ALL REINFORCING AND STEEL EMBEDS AS INDICATED ON DETAILS PRIOR TO CONCRETE PLACEMENT.
     - * CONTINUOUS INSPECTION OF CONCRETE PLACEMENT FOR ALL DRILLED PIERS AND GRADE BEAM FOOTINGS.
   - D) SEE ITEM 8 BELOW FOR INSPECTIONS BY GEOTECHNICAL ENGINEER.

3. POST–INSTALLED ANCHORS IN CONCRETE:
   - A) GENERAL – APPLICABLE TO ALL ANCHORS AND DOWELS:
     - 1) ALL EXPANSION ANCHORS, SCREW ANCHORS AND ADHESIVE ANCHOR SYSTEMS USED SHALL HAVE ICC–ES OR IAPMO–UES APPROVAL.
     - 2) PERIODIC SPECIAL INSPECTION IS REQUIRED FOR ALL ANCHORS.
   - B) EXPANSION ANCHORS IN CONCRETE:
     - 1) PULL–TEST OR TORQUE–TEST 100% OF ANCHORS EXCEPT AS NOTED; PULL–TEST OR TORQUE–TEST 10% OF SILL PLATE ANCHOR BOLTS AND 50% OR ALTERNATE ANCHORS FOR EQUIPMENT ANCHORAGE AND IN NON–STRUCTURAL APPLICATIONS.
     - 2) PULL–TEST LOAD VALUES SPECIFIED BELOW ARE BASED ON (1–1/4) TIMES THE MAXIMUM DESIGN TENSION STRENGTHS AS PROVIDED IN THE ICC–ES REPORT FOR HILTI KWIK–BOLT TZ2 (ESR–4266) IN CONCRETE, IN ACCORDANCE WITH CBC SECTION 1910A.5.4.
     - 3) PULL–TEST ANCHORS IN TENSION WITH CALIBRATED HYDRAULIC RAM TO VALUES SPECIFIED BELOW. PER CBC SECTION 1910A.5.5 ANCHORS TESTED WITH A HYDRAULIC JACK OR SPRING LOADED APPARATUS SHALL MAINTAIN THE TEST LOAD FOR A MINIMUM OF 15 SECONDS AND SHALL EXHIBIT NO DISCERNIBLE MOVEMENT DURING THE TENSION TEST, E.G. AS EVIDENCED BY LOOSENING OF THE WASHER UNDER THE NUT.

ANCHOR DIAMETER	NOMINAL EMBEDMENT (CONC.)	CONC. TENSION TEST LOAD (LBS.)
3/8"	2½"	1905
½"	2½"	1955
½"	3¾"	4050
5/8"	4½"	5525
¾"	5½"	7150

CONC. INSTALLATION TORQUE (FT.–LBS.)	ANCHOR DIAMETER
30(C.S. & S.S.)	3/8"ø
50(C.S.) & 40(S.S.)	1/2"ø
40(C.S.) & 60(S.S.)	5/8"ø
110(C.S.) & 125(S.S.)	3/4"ø

     - 4) ALTERNATIVELY, TORQUE–TEST ANCHORS WITH CALIBRATED TORQUE WRENCH TO VALUES SPECIFIED IN MANUFACTURER'S ICC–ES OR IAPMO–UES REPORT FOR RECOMMENDED INSTALLATION TORQUE WITHIN 1/4 TURN OF THE NUT FOR 3/8"ø SLEEVE ANCHOR ONLY AND WITHIN 1/2 TURN OF THE NUT FOR ALL OTHER ANCHORS.
   - B) RODS & DOWELS WITH CHEMICAL ADHESIVE IN CONCRETE:
     - 1) PULL–TESTING OF RODS INSTALLED IN CHEMICAL ADHESIVE IS REQUIRED FOR ALL ANCHORS. TESTING OF REBAR USED ONLY AS SHEAR DOWELS ACROSS COLD JOINTS IN SLABS–ON–GRADE, WHERE SLAB IS NOT PART OF THE LATERAL FORCE–RESISTING SYSTEM, IS NOT REQUIRED.
     - 2) PULL–TEST LOAD VALUES SPECIFIED BELOW ARE BASED ON (1–1/4) TIMES THE MAXIMUM DESIGN TENSION STRENGTHS AS PROVIDED IN THE ICC–ES REPORT FOR HILTI HIT–RE 500–V3 (ESR–3814) IN CONCRETE, IN ACCORDANCE WITH CBC SECTION 1910A.5.4.
     - 3) PULL–TEST ANCHORS IN TENSION WITH CALIBRATED HYDRAULIC RAM TO VALUES SPECIFIED BELOW, BASED ON MIN. EMBEDMENT OF 10ø IN CONCRETE & 9ø IN MASONRY, U.N.O.

ANCHOR/BAR DIAMETER	MIN. EMBEDMENT (CONC.)	CONC. TEST LOAD (LBS.)
3/8", #3	3¾"	2910
½", #4	5"	5165
5/8", #5	6¼"	8245
¾", #6	7½"	10150

4. WELDING OF STRUCTURAL STEEL. TESTING LAB SHALL:
   - A) VERIFY CERTIFICATION OF WELDERS AT START OF WORK.
   - B) REVIEW WELDING PROCEDURE SPECIFICATIONS SUBMITTED BY FABRICATOR.
   - C) PROVIDE CONTINUOUS INSPECTION OF ALL COMPLETE AND PARTIAL PENETRATION GROOVE WELDS, AND ALL FILLET WELDS 3/8" AND LARGER.
   - D) PROVIDE PERIODIC INSPECTION OF ALL FILLET WELDS 5/16" AND SMALLER.
   - E) TEST WELDS AS DEEMED NECESSARY BY THE INSPECTION AGENCY TO ENSURE ADEQUACY OF WELDS AND CONFORMANCE TO THE DRAWINGS AND SPECIFICATIONS.

5. ADDITIONAL INSPECTIONS BY STRUCTURAL ENGINEER:
   ARCHITECT AND ENGINEER SHALL BE NOTIFIED AT LEAST 48 HOURS PRIOR TO THE FOLLOWING TO ALLOW FOR INSPECTION OF THE RESPECTIVE WORK PRIOR TO ENCLOSING IN FINISHES:
   - A) AT SUBSTANTIAL COMPLETION OF ANY AREA OF FOUNDATION WORK PRIOR TO CLOSING OF FORMS OR PLACEMENT OF CONCRETE.
   - B) AT SUBSTANTIAL COMPLETION OF ANY AREA OF STRUCTURAL STEEL FRAMING.

6. INSPECTIONS BY GEOTECHNICAL ENGINEER: AS NOTED IN GEOTECH REPORT.

SHOP DRAWING SUBMITTALS

1. PROVIDE SHOP DRAWINGS FOR THE FOLLOWING MATERIALS/PRODUCTS:
   - A) CONCRETE MIX DESIGNS (SUBMIT TO TESTING/INSPECTION AGENCY)
   - B) STRUCTURAL STEEL AND MISC. METALS

2. SEE SPECIFICATIONS FOR OTHER SUBMITTALS AND SUBMITTAL PROCEDURE.

MATERIAL CERTIFICATION AND TESTING NOTES:

1. ALL MATERIALS USED IN CONCRETE CONSTRUCTION SHALL BE CERTIFIED BY THE SUPPLIER AS COMPLYING WITH THE APPLICABLE ASTM STANDARDS, IN ACCORDANCE WITH CBC SECTION 1910A. ALL MATERIAL CERTIFICATIONS SHALL BE PROVIDED PRIOR TO USE OF THE MATERIALS IN THE WORK.

2. MILL TEST REPORTS AND CERTIFICATES OF COMPLIANCE FOR CEMENT, AGGREGATES, REINFORCING STEEL, ADMIXTURES, AND ALL OTHER MATERIALS SHALL BE SUBMITTED TO THE STRUCTURAL ENGINEER OF RECORD, THE PROJECT INSPECTOR, AND DSA FOR REVIEW AND ACCEPTANCE PRIOR TO INCORPORATION INTO THE WORK.

3. CONCRETE MIX DESIGNS SHALL BE SUBMITTED AND APPROVED PRIOR TO PLACEMENT OF CONCRETE.

CONCRETE SAMPLING AND TESTING (CBC 1705A.3):

4. SAMPLING OF FRESH CONCRETE SHALL BE PERFORMED IN ACCORDANCE WITH ASTM C172.

5. SLUMP, TEMPERATURE, AND AIR CONTENT (WHEN APPLICABLE) SHALL BE TESTED AT THE TIME OF PLACEMENT IN ACCORDANCE WITH ASTM C143, ASTM C1064, AND ASTM C231 OR ASTM C173, RESPECTIVELY.

6. COMPRESSIVE STRENGTH TEST CYLINDERS SHALL BE MOLDED, CURED, AND TESTED IN ACCORDANCE WITH ASTM C31 AND ASTM C39.

7. MINIMUM TESTING FREQUENCY SHALL BE:
A. AT LEAST ONE SET OF CYLINDERS FOR EACH 150 CUBIC YARDS OF CONCRETE, OR
B. ONE SET PER DAY OF CONCRETE PLACEMENT,
WHICHEVER IS GREATER.
EACH SET SHALL CONSIST OF NOT LESS THAN FOUR (4) TEST CYLINDERS.

8. AT LEAST TWO (2) CYLINDERS SHALL BE TESTED AT 7 DAYS AND TWO (2) CYLINDERS AT 28 DAYS. ONE (1) ADDITIONAL CYLINDER SHALL BE RETAINED FOR UP TO 60 DAYS IF REQUIRED.

9. CONCRETE ACCEPTANCE AND EVALUATION OF COMPRESSIVE STRENGTH TEST RESULTS SHALL BE PER CBC SECTION 1910A, INCLUDING THE REQUIREMENTS OF CBC 1910A.6.

10. ALL CONCRETE SAMPLING AND TESTING SHALL BE PERFORMED BY A DSA–APPROVED SPECIAL INSPECTION AND TESTING AGENCY.

11. ALL TEST RESULTS SHALL BE SUBMITTED TO THE STRUCTURAL ENGINEER OF RECORD, THE PROJECT INSPECTOR, AND DSA.

IDENTIFICATION STAMP
DIV. OF THE STATE ARCHITECT
APP: 02-123587 INC:
REVIEWED FOR
SS ☑ FLS ☑ ACS ☑
DATE: 01/16/2026

VERDE DESIGN
LANDSCAPE ARCHITECTURE
CIVIL ENGINEERING
SPORT PLANNING & DESIGN

1843 Iron Point Rd. Suite 140
Folsom, CA 95630
tel: 916.415.6554
fax: 916.415.6525
www.VerdeDesignInc.com

STAMP

TIM D. HYDE
No. S3260
EXP. 3/31/27

CONSULTANT

AKH
Structural Engineers, Inc
275 Tennant Avenue, Ste. 204 ph: 408.978.1970
Morgan Hill, CA 95037 AKHSE.com Job 25112

KEYMAP

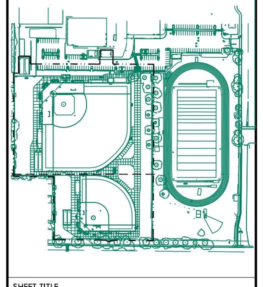

SHEET TITLE
STRUCTURAL NOTES & MATERIAL GRADES

PROJECT NAME
LODI HIGH SCHOOL ATHLETIC FIELD IMPROVEMENTS

PROJECT ADDRESS
3 S PACIFIC AVE
LODI, CA
95242

SUBMITTAL	DATE
50% DSA SUBMITTAL	07/31/25
100% DSA SUBMITTAL	09/25/25
DSA BACKCHECK SUBMITTAL	12/17/25
DSA BACKCHECK SUBMITTAL	01/08/26

NO.	REVISIONS	DATE
△		
△		
△		
△		
△		
△		

DRAWN BY: JJQ
CHECKED BY: TDH
DATE ISSUED: 01/08/2026
SCALE: NONE
PROJ. NO.: 2502700
SHEET NO.: S1.1

ALL IDEAS, DESIGNS, ARRANGEMENTS, AND PLANS INDICATED OR REPRESENTED BY THIS DRAWING ARE OWNED BY AND THE PROPERTY OF VERDE DESIGN, INC. AND WERE CREATED, EVOLVED, AND DEVELOPED FOR USE ON AND IN CONNECTION WITH THE SPECIFIED PROJECT. NONE OF SUCH IDEAS, DESIGNS, ARRANGEMENTS OR PLANS SHALL BE USED, REPRODUCED, OR PUBLISHED BY ANY METHOD, IN WHOLE OR IN PART, OR DISCLOSED TO ANY PERSON, FIRM, OR CORPORATION FOR ANY PURPOSE WHATSOEVER WITHOUT WRITTEN PERMISSION OF VERDE DESIGN, INC.

DRAWING NAME: P:\Verde Design\25112 Lodi HS Fields Improvements\Dwgs\Structural\S1.1 Structural Notes.dwg
PLOT DATE: 12-12-25 PLOTTED BY: Jose

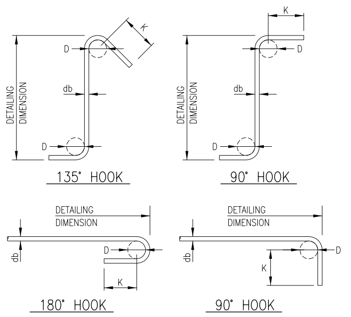
K
D
db
DETAILING DIMENSION
135° HOOK
90° HOOK
180° HOOK
90° HOOK

STANDARD HOOKS			
BAR SIZE	"D" IN	180° HOOKS "K"	90° HOOKS "K"
#3	2-1/4"	2-1/2"	4-1/2"
#4	3"	2-1/2"	6"
#5	3-3/4"	2-1/2"	7-1/2"
#6	4-1/2"	3"	9"
#7	5-1/4"	3-1/2"	10-1/2"
#8	6"	4"	12"

STIRRUP AND TIE HOOKS				
BAR SIZE	"D" IN	180° HOOKS "K"	135° HOOKS "K"	90° HOOKS "K"
#3	1-1/2"	2-1/2"	3"	3"
#4	2"	2-1/2"	3"	3"
#5	2-1/2"	2-1/2"	3-3/4"	3-3/4"
#6	4-1/2"	3"	4-1/2"	9"

1 TYPICAL REBAR BENDS AND HOOKS

NO SCALE

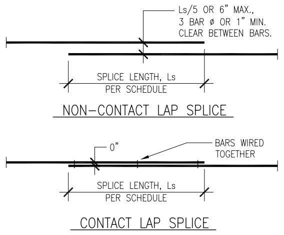
Ls/5 OR 6" MAX., 3 BAR ø OR 1" MIN. CLEAR BETWEEN BARS.
SPLICE LENGTH, Ls PER SCHEDULE
NON-CONTACT LAP SPLICE
0"
BARS WIRED TOGETHER
SPLICE LENGTH, Ls PER SCHEDULE
CONTACT LAP SPLICE

REBAR LAP SPLICE LENGTHS (Ls)			
	HARD ROCK (REG. WT.) CONCRETE		
BAR SIZE	CLASS B SPLICE TYP., U.N.O.	TOP BARS (SEE NOTE 1)	GROUTED MASONRY (CMU)
#3	22"	28"	27"
#4	29"	37"	36"
#5	36"	47"	45"
#6	43"	56"	54"
#7	63"	81"	63"
#8	72"	93"	72"
#9	81"	105"	-
#10	90"	116"	-
#11	98"	128"	-

NOTES:

1. TOP BARS ARE HORIZONTAL BARS WITH MORE THAN 12" OF FRESH CONCRETE CAST BELOW BARS, IN SAME POUR AS BARS (AS IN DEEP BEAM OR FOOTING POURS, ETC.).
2. STAGGER LAPS IN SUCCESIVE PARALLEL BARS IN SLABS AND WALLS A DISTANCE EQUAL TO THE REQUIRED LAP SPLICE LENGTH, BUT NOT LESS THAN 24" (ALONG LENGTH OF BARS).
3. ALL LAP SPLICES SHALL BE CONTACT OR NON-CONTACT TYPE, AS SHOWN.
4. INCREASE SCHEDULED LAP LENGTHS BY 33% WHEN IN LIGHT WEIGHT CONCRETE.

3 TYPICAL REBAR LAP SPLICES

1"=1' 0"

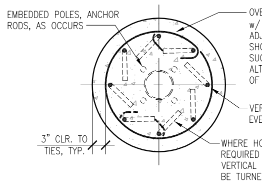
EMBEDDED POLES, ANCHOR RODS, AS OCCURS
OVERLAP TIE ENDS 6" MIN. w/ STD. HOOK ENGAGING ADJACENT VERT. BARS AS SHOWN. LAPS OF SUCCESSIVE TIES SHALL ALTERNATE SIDE-TO-SIDE OF PIER, TYP.
VERTICAL BARS SPACED EVENLY AROUND PIER, TYP.
WHERE HOOKS ARE REQUIRED AT TOP OF VERTICAL BARS, HOOKS CAN BE TURNED AS SHOWN.
3" CLR. TO TIES, TYP.

NOTE: CIRCULAR SPIRAL TIES OF SAME SIZE AND PITCH MAY BE USED IN LIEU OF CIRCULAR TIES NOTED. ADDITIONALLY, PROVIDE TWO (2) FULL TURNS AT TOP AND BOTTOM OF SPIRAL.

5 TYPICAL PIER REINFORCING REQUIREMENTS

3/4"=1' 0"

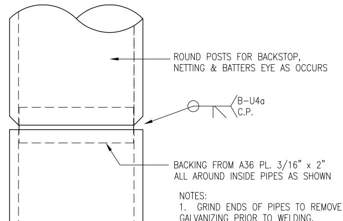
ROUND POSTS FOR BACKSTOP, NETTING & BATTERS EYE AS OCCURS
B-U4a C.P.
BACKING FROM A36 PL. 3/16" x 2" ALL AROUND INSIDE PIPES AS SHOWN

NOTES:
1. GRIND ENDS OF PIPES TO REMOVE GALVANIZING PRIOR TO WELDING.
2. AFTER WELDING HAS COOLED, APPLY ZINC-RICH CONTENT PAINT TO COVER WELD AND AFFECTED STEEL.
3. WHERE AVAILABLE INDIVIDUAL MEMBER LENGTHS ALLOW, SPLICES SHALL BE EMBEDDED IN C.I.P. CONCRETE FOOTING OR BACKSTOP WALL, AS OCCURS.

SPLICE POLE SEGMENTS OF SAME SIZE AS SHOWN WHEN FULL-LENGTH POLE MATERIAL IS NOT AVAILABLE.

6 TYPICAL POLE/POST SPLICE

3"=1' 0"

POLE TYPE	PIER DIAMETER, "DIA"	MIN. PIER DEPTH, "D"	PIER REINFORCING	COMMENTS
14' HIGH BATTING CAGE	18"	5'-6"	SEE DETAIL 13	5"ø STD. PIPE POSTS (SCHED. 40, 5.563" O.D. x 0.258" WALL, ASTM A53, GR. B, Fy=35 ksi).
20' HIGH FOUL POLE	18"	6'-6"	SEE DETAIL 16	ROUND ALUMINUM POLE AND GROUND SLEEVE BY OTHERS. HEIGHT FROM GRADE TO BOTTOM OF WING SCREEN = 8'-0"
25' HIGH FLAGPOLE	24"	5'-0"	SEE DETAIL 25	ROUND TAPERED ALUMINUM FLAGPOLE AND GROUND SLEEVE BY OTHERS; MAX. FLAG SIZE = 5' x 8'
30' HIGH FOUL POLE	24"	7'-0"	SEE DETAIL 15	ROUND ALUMINUM POLE AND GROUND SLEEVE BY OTHERS. HEIGHT FROM GRADE TO BOTTOM OF WING SCREEN = 8'-0"
30' HIGH BACKSTOP	30"	8'-0"	SEE DETAIL 14	8"ø STD. PIPE POSTS (SCHED. 40, 8.625" O.D. x 0.322" WALL, ASTM A53, GR. B, Fy=35 ksi). MAX. POST SPACING = 11'-0" o.c. SPLICE POSTS WHERE REQD. PER DET. 5/-.
20' HIGH NETTING (13' HIGH NETTING ABOVE 7' HIGH C.L. FENCE, SEE LANDSCAPE DWGS.)	24"	7'-0"	SEE DETAIL 14	6"ø STD. PIPE POSTS (SCHED. 40, 6.630" O.D. x 0.280" WALL, ASTM A53, GR. B, Fy=35 ksi). MAX. POST SPACING = 24'-0" o.c. SPLICE POSTS WHERE REQD. PER DET. 5/-.

11 POLE/POST & C.I.D.H. PIER SCEDULE

NO SCALE

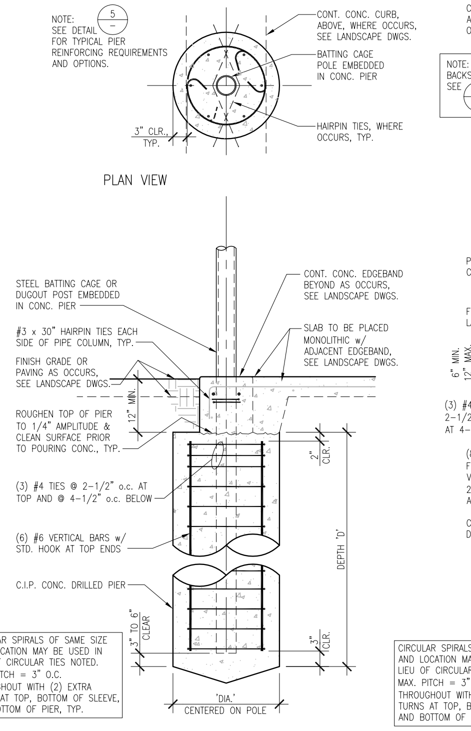
NOTE: SEE DETAIL 5/– FOR TYPICAL PIER REINFORCING REQUIREMENTS AND OPTIONS.
CONT. CONC. CURB, ABOVE, WHERE OCCURS, SEE LANDSCAPE DWGS.
BATTING CAGE POLE EMBEDDED IN CONC. PIER
HAIRPIN TIES, WHERE OCCURS, TYP.
3" CLR., TYP.
PLAN VIEW
STEEL BATTING CAGE OR DUGOUT POST EMBEDDED IN CONC. PIER
CONT. CONC. EDGEBAND BEYOND AS OCCURS, SEE LANDSCAPE DWGS.
#3 x 30" HAIRPIN TIES EACH SIDE OF PIPE COLUMN, TYP.
SLAB TO BE PLACED MONOLITHIC w/ ADJACENT EDGEBAND, SEE LANDSCAPE DWGS.
FINISH GRADE OR PAVING AS OCCURS, SEE LANDSCAPE DWGS.
12" MIN.
ROUGHEN TOP OF PIER TO 1/4" AMPLITUDE & CLEAN SURFACE PRIOR TO POURING CONC., TYP.
2" CLR.
(3) #4 TIES @ 2-1/2" o.c. AT TOP AND @ 4-1/2" o.c. BELOW
(6) #6 VERTICAL BARS w/ STD. HOOK AT TOP ENDS
DEPTH 'D'
C.I.P. CONC. DRILLED PIER
3" TO 6" CLEAR
3" CLR.
'DIA.' CENTERED ON POLE

CIRCULAR SPIRALS OF SAME SIZE AND LOCATION MAY BE USED IN LIEU OF CIRCULAR TIES NOTED. MAX. PITCH = 3" O.C. THROUGHOUT WITH (2) EXTRA TURNS AT TOP, BOTTOM OF SLEEVE, AND BOTTOM OF PIER, TYP.

13 BATTING CAGE FOOTING

3/4"=1' 0"

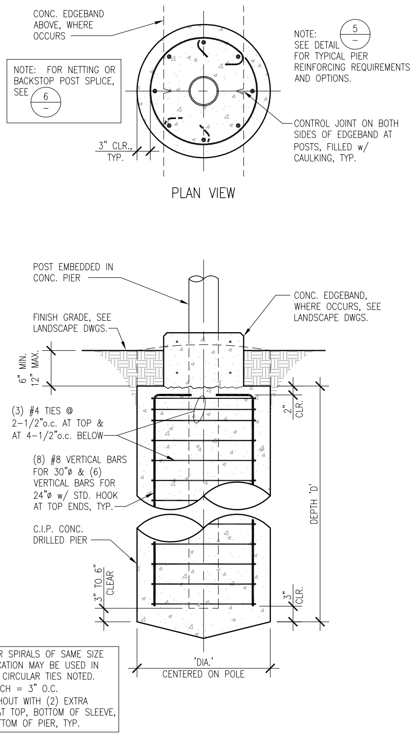
CONC. EDGEBAND ABOVE, WHERE OCCURS
NOTE: FOR NETTING OR BACKSTOP POST SPLICE, SEE 6/–
NOTE: SEE DETAIL 5/– FOR TYPICAL PIER REINFORCING REQUIREMENTS AND OPTIONS.
CONTROL JOINT ON BOTH SIDES OF EDGEBAND AT POSTS, FILLED w/ CAULKING, TYP.
3" CLR., TYP.
PLAN VIEW
POST EMBEDDED IN CONC. PIER
CONC. EDGEBAND, WHERE OCCURS, SEE LANDSCAPE DWGS.
FINISH GRADE, SEE LANDSCAPE DWGS.
6" MIN. 12" MAX.
(3) #4 TIES @ 2-1/2"o.c. AT TOP & AT 4-1/2"o.c. BELOW
2" CLR.
(8) #8 VERTICAL BARS FOR 30"ø & (6) VERTICAL BARS FOR 24"ø w/ STD. HOOK AT TOP ENDS, TYP.
DEPTH 'D'
C.I.P. CONC. DRILLED PIER
3" TO 6" CLEAR
3" CLR.
'DIA.' CENTERED ON POLE

CIRCULAR SPIRALS OF SAME SIZE AND LOCATION MAY BE USED IN LIEU OF CIRCULAR TIES NOTED. MAX. PITCH = 3" O.C. THROUGHOUT WITH (2) EXTRA TURNS AT TOP, BOTTOM OF SLEEVE, AND BOTTOM OF PIER, TYP.

14 BACKSTOP & NETTING FOOTING

3/4"=1' 0"

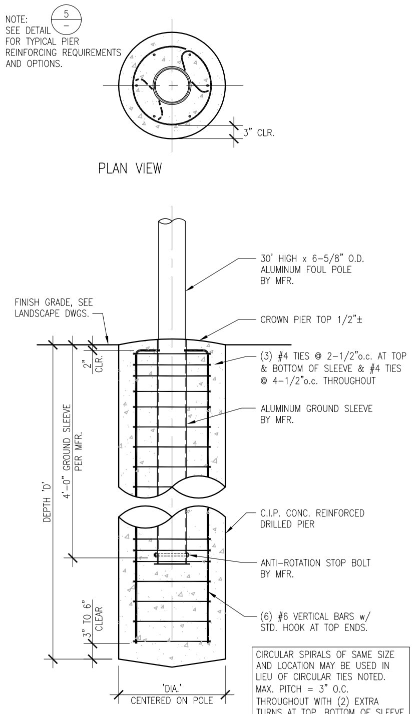
NOTE: SEE DETAIL 5/– FOR TYPICAL PIER REINFORCING REQUIREMENTS AND OPTIONS.
3" CLR.
PLAN VIEW
30' HIGH x 6-5/8" O.D. ALUMINUM FOUL POLE BY MFR.
FINISH GRADE, SEE LANDSCAPE DWGS.
CROWN PIER TOP 1/2"±
2" CLR.
(3) #4 TIES @ 2-1/2"o.c. AT TOP & BOTTOM OF SLEEVE & #4 TIES @ 4-1/2"o.c. THROUGHOUT
ALUMINUM GROUND SLEEVE BY MFR.
DEPTH 'D'
4'-0" GROUND SLEEVE PER MFR.
C.I.P. CONC. REINFORCED DRILLED PIER
ANTI-ROTATION STOP BOLT BY MFR.
3" TO 6" CLEAR
(6) #6 VERTICAL BARS w/ STD. HOOK AT TOP ENDS.
'DIA.' CENTERED ON POLE

CIRCULAR SPIRALS OF SAME SIZE AND LOCATION MAY BE USED IN LIEU OF CIRCULAR TIES NOTED. MAX. PITCH = 3" O.C. THROUGHOUT WITH (2) EXTRA TURNS AT TOP, BOTTOM OF SLEEVE, AND BOTTOM OF PIER, TYP.

15 FOUL POLE FOOTING

BASEBALL

3/4"=1' 0"

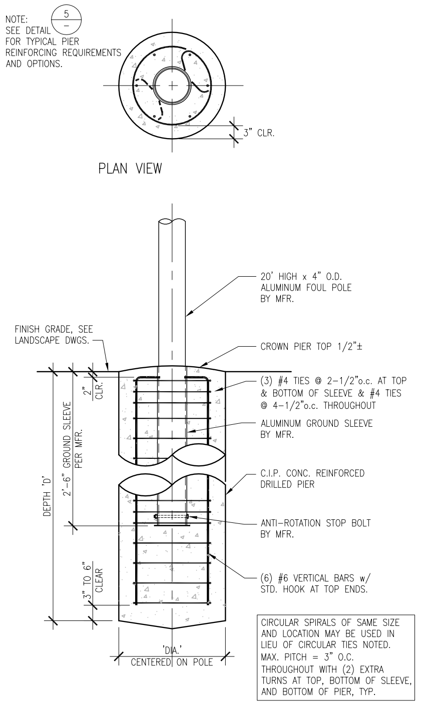
NOTE: SEE DETAIL 5/– FOR TYPICAL PIER REINFORCING REQUIREMENTS AND OPTIONS.
3" CLR.
PLAN VIEW
20' HIGH x 4" O.D. ALUMINUM FOUL POLE BY MFR.
FINISH GRADE, SEE LANDSCAPE DWGS.
CROWN PIER TOP 1/2"±
2" CLR.
(3) #4 TIES @ 2-1/2"o.c. AT TOP & BOTTOM OF SLEEVE & #4 TIES @ 4-1/2"o.c. THROUGHOUT
ALUMINUM GROUND SLEEVE BY MFR.
DEPTH 'D'
2'-6" GROUND SLEEVE PER MFR.
C.I.P. CONC. REINFORCED DRILLED PIER
ANTI-ROTATION STOP BOLT BY MFR.
3" TO 6" CLEAR
(6) #6 VERTICAL BARS w/ STD. HOOK AT TOP ENDS.
'DIA.' CENTERED ON POLE

CIRCULAR SPIRALS OF SAME SIZE AND LOCATION MAY BE USED IN LIEU OF CIRCULAR TIES NOTED. MAX. PITCH = 3" O.C. THROUGHOUT WITH (2) EXTRA TURNS AT TOP, BOTTOM OF SLEEVE, AND BOTTOM OF PIER, TYP.

16 FOUL POLE FOOTING

SOFTBALL

3/4"=1' 0"

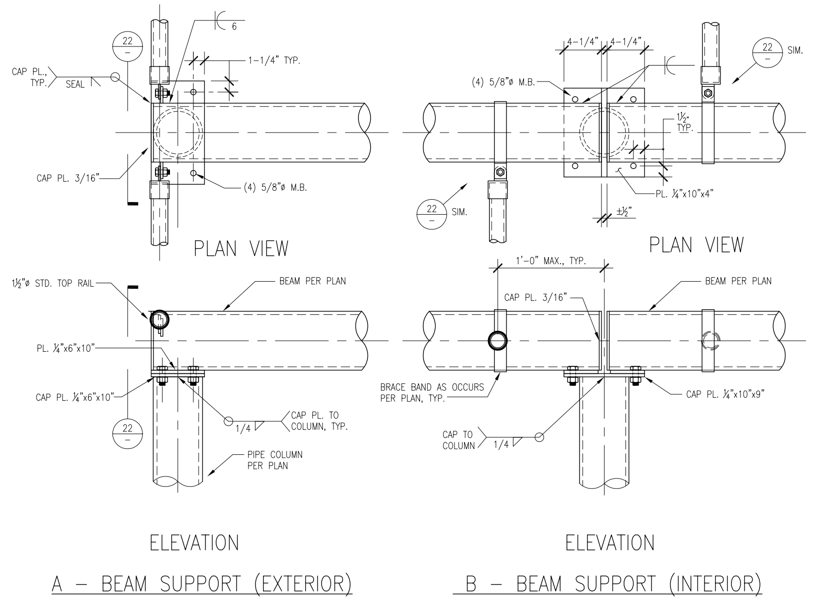
22/–
CAP PL., TYP.
SEAL
6
1-1/4" TYP.
CAP PL. 3/16"
(4) 5/8"ø M.B.
PLAN VIEW
4-1/4"
4-1/4"
(4) 5/8"ø M.B.
22/– SIM.
1½" TYP.
PL. ¼"x10"x4"
±½"
PLAN VIEW
1½"ø STD. TOP RAIL
BEAM PER PLAN
PL. ¼"x6"x10"
CAP PL. ¼"x6"x10"
1/4
CAP PL. TO COLUMN, TYP.
PIPE COLUMN PER PLAN
ELEVATION
A - BEAM SUPPORT (EXTERIOR)
1'-0" MAX., TYP.
CAP PL. 3/16"
BEAM PER PLAN
BRACE BAND AS OCCURS PER PLAN, TYP.
CAP PL. ¼"x10"x9"
CAP TO COLUMN
1/4
ELEVATION
B - BEAM SUPPORT (INTERIOR)

23 BATTING CAGE BEAM CONNECTIONS

1-1/2"=1' 0"

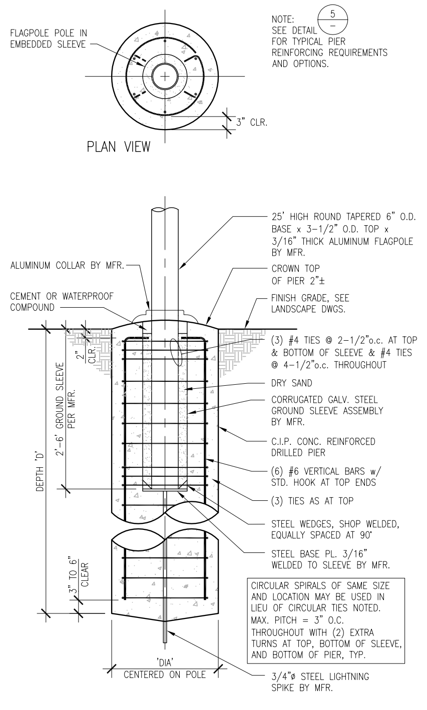
FLAGPOLE POLE IN EMBEDDED SLEEVE
NOTE: SEE DETAIL 5/– FOR TYPICAL PIER REINFORCING REQUIREMENTS AND OPTIONS.
3" CLR.
PLAN VIEW
25' HIGH ROUND TAPERED 6" O.D. BASE x 3-1/2" O.D. TOP x 3/16" THICK ALUMINUM FLAGPOLE BY MFR.
ALUMINUM COLLAR BY MFR.
CROWN TOP OF PIER 2"±
CEMENT OR WATERPROOF COMPOUND
FINISH GRADE, SEE LANDSCAPE DWGS.
2" CLR.
(3) #4 TIES @ 2-1/2"o.c. AT TOP & BOTTOM OF SLEEVE & #4 TIES @ 4-1/2"o.c. THROUGHOUT
DRY SAND
CORRUGATED GALV. STEEL GROUND SLEEVE ASSEMBLY BY MFR.
DEPTH 'D'
2'-6' GROUND SLEEVE PER MFR.
C.I.P. CONC. REINFORCED DRILLED PIER
(6) #6 VERTICAL BARS w/ STD. HOOK AT TOP ENDS
(3) TIES AS AT TOP
STEEL WEDGES, SHOP WELDED, EQUALLY SPACED AT 90°
STEEL BASE PL. 3/16" WELDED TO SLEEVE BY MFR.
3" TO 6" CLEAR
'DIA' CENTERED ON POLE
3/4"ø STEEL LIGHTNING SPIKE BY MFR.

CIRCULAR SPIRALS OF SAME SIZE AND LOCATION MAY BE USED IN LIEU OF CIRCULAR TIES NOTED. MAX. PITCH = 3" O.C. THROUGHOUT WITH (2) EXTRA TURNS AT TOP, BOTTOM OF SLEEVE, AND BOTTOM OF PIER, TYP.

25 FLAG POLE FOOTING

3/4"=1' 0"

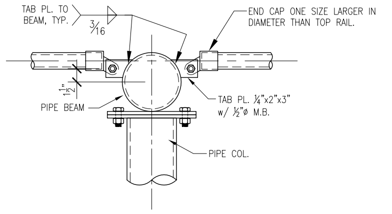
TAB PL. TO BEAM, TYP.
3/16
END CAP ONE SIZE LARGER IN DIAMETER THAN TOP RAIL.
1½"
PIPE BEAM
TAB PL. ¼"x2"x3" w/ ½"ø M.B.
PIPE COL.

22 SECTION - TOP RAIL AT PIPE BEAM CONN.

1-1/2"=1' 0"

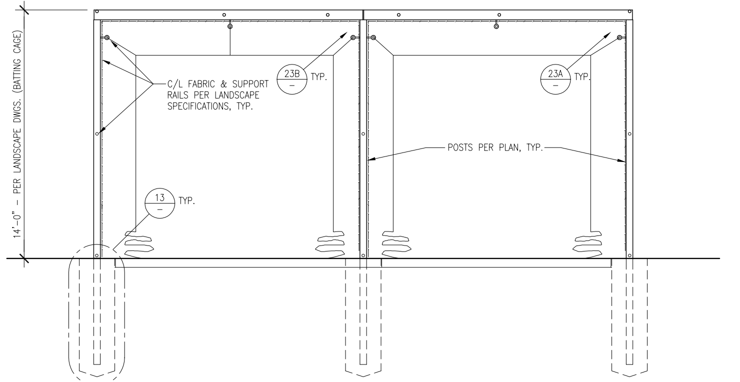
14'-0" - PER LANDSCAPE DWGS. (BATTING CAGE)
C/L FABRIC & SUPPORT RAILS PER LANDSCAPE SPECIFICATIONS, TYP.
23B/– TYP.
23A/– TYP.
POSTS PER PLAN, TYP.
13/– TYP.

27 TYP. BATTING CAGES SECTIONS

1"=1' 0"

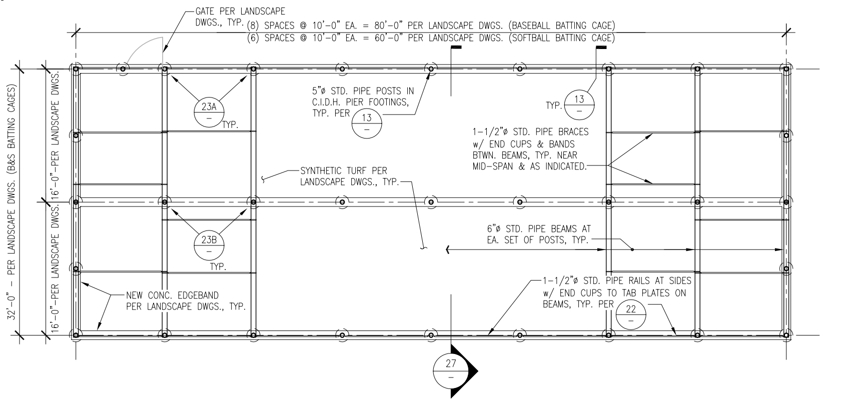
GATE PER LANDSCAPE DWGS., TYP.
(8) SPACES @ 10'-0" EA. = 80'-0" PER LANDSCAPE DWGS. (BASEBALL BATTING CAGE)
(6) SPACES @ 10'-0" EA. = 60'-0" PER LANDSCAPE DWGS. (SOFTBALL BATTING CAGE)
32'-0" - PER LANDSCAPE DWGS. (B&S BATTING CAGES)
16'-0"-PER LANDSCAPE DWGS.
16'-0"-PER LANDSCAPE DWGS.
23A/– TYP.
5"ø STD. PIPE POSTS IN C.I.D.H. PIER FOOTINGS, TYP. PER 13/–
TYP. 13/–
1-1/2"ø STD. PIPE BRACES w/ END CUPS & BANDS BTWN. BEAMS, TYP. NEAR MID-SPAN & AS INDICATED.
SYNTHETIC TURF PER LANDSCAPE DWGS., TYP.
23B/– TYP.
6"ø STD. PIPE BEAMS AT EA. SET OF POSTS, TYP.
NEW CONC. EDGEBAND PER LANDSCAPE DWGS., TYP.
1-1/2"ø STD. PIPE RAILS AT SIDES w/ END CUPS TO TAB PLATES ON BEAMS, TYP. PER 22/–
27/–

29 BATTING CAGES FOUNDATION & FRAMING PLANS

1/8"=1' 0"

IDENTIFICATION STAMP
DIV. OF THE STATE ARCHITECT
APP: 02-123587 INC:
REVIEWED FOR
SS ☑ FLS ☑ ACS ☑
DATE: 01/16/2026

VERDE DESIGN
LANDSCAPE ARCHITECTURE
CIVIL ENGINEERING
SPORT PLANNING & DESIGN
1843 Iron Point Rd. Suite 140
Folsom, CA 95630
tel: 916.415.6554
fax: 916.415.6525
www.VerdeDesignInc.com

STAMP

TIM D. HYDE
No. S3260
EXP. 3/31/27
STRUCTURAL

CONSULTANT

AKH
Structural Engineers, Inc
275 Tennant Avenue, Ste. B ph: 408.978.1970
Morgan Hill, CA 95037 AKHSE.com Job M23-112

KEYMAP

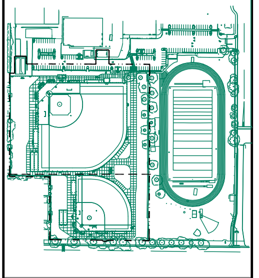

SHEET TITLE

SITE STRUCTURES
FOUNDATION DETAILS

PROJECT NAME

LODI HIGH SCHOOL
ATHLETIC FIELD
IMPROVEMENTS

PROJECT ADDRESS

3 S PACIFIC AVE
LODI, CA
95242

SUBMITTAL	DATE
50% DSA SUBMITTAL	07/31/25
100% DSA SUBMITTAL	09/25/25
DSA BACKCHECK SUBMITTAL	12/17/25
DSA BACKCHECK SUBMITTAL	01/08/26

NO.	REVISIONS	DATE
△		
△		
△		
△		
△		
△		

DRAWN BY JJQ
CHECKED BY TDH
DATE ISSUED 01/08/2026
SCALE AS NOTED
PROJ. NO. 2502700
SHEET NO. S4.1

ALL IDEAS, DESIGNS, ARRANGEMENTS, AND PLANS INDICATED OR REPRESENTED BY THIS DRAWING ARE OWNED BY AND THE PROPERTY OF VERDE DESIGN, INC. AND WERE CREATED, EVOLVED, AND DEVELOPED FOR USE ON AND IN CONNECTION WITH THE SPECIFIED PROJECT. NONE OF SUCH IDEAS, DESIGNS, ARRANGEMENTS OR PLANS SHALL BE USED, REPRODUCED, OR PUBLISHED BY ANY METHOD, IN WHOLE OR IN PART, OR DISCLOSED TO ANY PERSON, FIRM, OR CORPORATION FOR ANY PURPOSE WHATSOEVER WITHOUT WRITTEN PERMISSION OF VERDE DESIGN, INC.

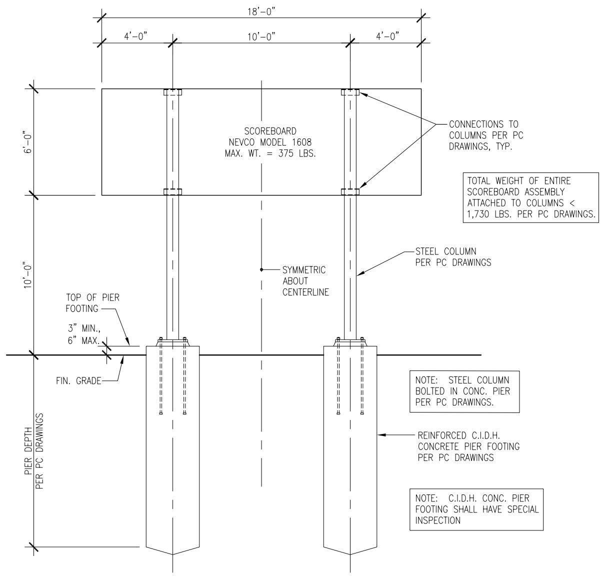
18'-0"
4'-0"
10'-0"
4'-0"
6'-0"
10'-0"
SCOREBOARD
NEVCO MODEL 1608
MAX. WT. = 375 LBS.
CONNECTIONS TO COLUMNS PER PC DRAWINGS, TYP.
TOTAL WEIGHT OF ENTIRE SCOREBOARD ASSEMBLY ATTACHED TO COLUMNS < 1,730 LBS. PER PC DRAWINGS.
STEEL COLUMN PER PC DRAWINGS
SYMMETRIC ABOUT CENTERLINE
TOP OF PIER FOOTING
3" MIN., 6" MAX.
FIN. GRADE
NOTE: STEEL COLUMN BOLTED IN CONC. PIER PER PC DRAWINGS.
REINFORCED C.I.D.H. CONCRETE PIER FOOTING PER PC DRAWINGS
NOTE: C.I.D.H. CONC. PIER FOOTING SHALL HAVE SPECIAL INSPECTION
PIER DEPTH PER PC DRAWINGS

9 SCHEMATIC SCOREBOARD ELEVATION - SOFTBALL

DESIGN PER NEVCO PC DRAWINGS

NO SCALE

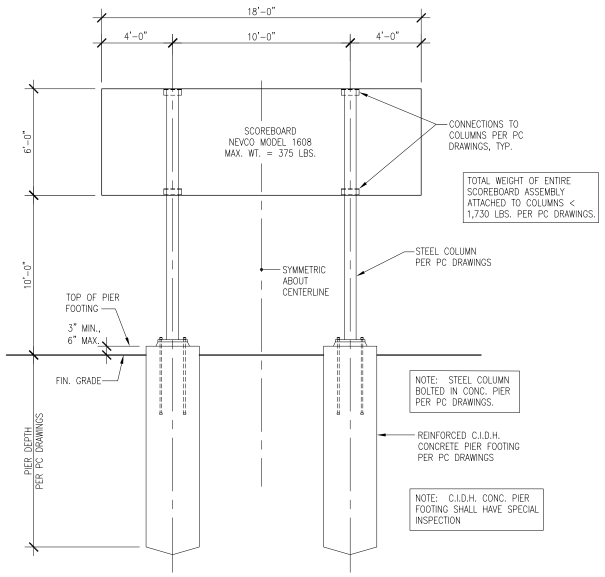
18'-0"
4'-0"
10'-0"
4'-0"
6'-0"
10'-0"
SCOREBOARD
NEVCO MODEL 1608
MAX. WT. = 375 LBS.
CONNECTIONS TO COLUMNS PER PC DRAWINGS, TYP.
TOTAL WEIGHT OF ENTIRE SCOREBOARD ASSEMBLY ATTACHED TO COLUMNS < 1,730 LBS. PER PC DRAWINGS.
STEEL COLUMN PER PC DRAWINGS
SYMMETRIC ABOUT CENTERLINE
TOP OF PIER FOOTING
3" MIN., 6" MAX.
FIN. GRADE
NOTE: STEEL COLUMN BOLTED IN CONC. PIER PER PC DRAWINGS.
REINFORCED C.I.D.H. CONCRETE PIER FOOTING PER PC DRAWINGS
NOTE: C.I.D.H. CONC. PIER FOOTING SHALL HAVE SPECIAL INSPECTION
PIER DEPTH PER PC DRAWINGS

11 SCHEMATIC SCOREBOARD ELEVATION - BASEBALL

DESIGN PER NEVCO PC DRAWINGS

NO SCALE

IDENTIFICATION STAMP
DIV. OF THE STATE ARCHITECT
APP: 02-123587 INC:
REVIEWED FOR
SS ☑ FLS ☑ ACS ☑
DATE: 01/16/2026

VERDE DESIGN
LANDSCAPE ARCHITECTURE
CIVIL ENGINEERING
SPORT PLANNING & DESIGN
1843 Iron Point Rd. Suite 140
Folsom, CA 95630
tel: 916.415.6554
fax: 916.415.6525
www.VerdeDesignInc.com

STAMP

TIM D. HYDE
No. S3260
EXP. 3/31/27

CONSULTANT

AKH
Structural Engineers, Inc
275 Tennant Avenue, Ste. B ph: 408.978.1970
Morgan Hill, CA 95037 AKHSE.com Job M23-112

KEYMAP

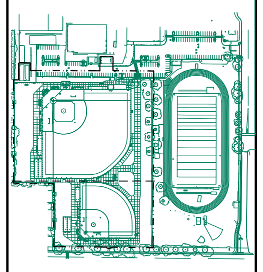

SHEET TITLE

SITE STRUCTURES
SCHEMATIC ELEVATIONS

PROJECT NAME

LODI HIGH SCHOOL
ATHLETIC FIELD
IMPROVEMENTS

PROJECT ADDRESS

3 S PACIFIC AVE
LODI, CA
95242

SUBMITTAL	DATE
50% DSA SUBMITTAL	07/31/25
100% DSA SUBMITTAL	09/25/25
DSA BACKCHECK SUBMITTAL	12/17/25
DSA BACKCHECK SUBMITTAL	01/08/26

NO.	REVISIONS	DATE
△		
△		
△		
△		
△		
△		

DRAWN BY: JJQ
CHECKED BY: TDH
DATE ISSUED: 01/08/2026
SCALE: AS NOTED
PROJ. NO.: 2502700
SHEET NO.: S4.2

ALL IDEAS, DESIGNS, ARRANGEMENTS, AND PLANS INDICATED OR REPRESENTED BY THIS DRAWING ARE OWNED BY AND THE PROPERTY OF VERDE DESIGN, INC. AND WERE CREATED, EVOLVED, AND DEVELOPED FOR USE ON AND IN CONNECTION WITH THE SPECIFIED PROJECT. NONE OF SUCH IDEAS, DESIGNS, ARRANGEMENTS OR PLANS SHALL BE USED, REPRODUCED, OR PUBLISHED BY ANY METHOD, IN WHOLE OR IN PART, OR DISCLOSED TO ANY PERSON, FIRM, OR CORPORATION FOR ANY PURPOSE WHATSOEVER WITHOUT WRITTEN PERMISSION OF VERDE DESIGN, INC.

ELECTRICAL ABBREVIATION

ABBREVIATION	DESCRIPTION
A	AMPERES, AMBER
AC	ALTERNATING CURRENT, AIR CONDITIONER
AFC	ABOVE FINISHED CEILING
AFF	ABOVE FINISHED FLOOR
AFG	ABOVE FINISHED GRADE
AIC	AVAILABLE INTERRUPTING CAPACITY
AWG	AMERICAN WIRE GAUGE
BC	BARE COPPER
C	CONDUIT, CLOSE, CONTROL
CB	CIRCUIT BREAKER
CFCI	CONTRACTOR FURNISHED CONTRACTOR INSTALLED
CFOI	CONTRACTOR FURNISHED OWNER INSTALLED
CLG	CEILING
COM	COMMUNICATION
CT	CURRENT TRANSFORMER
CU	COPPER
(D)	DEMOLISH
DN	DOWN
(E)	EXISTING
EF	EXHAUST FAN
ECH	ELECTRIC CONVECTION HEATER
F	FUSE
FACP	FIRE ALARM CONTROL PANEL
FBO	FURNISHED BY OTHERS
G, GND	GROUND
GFCI	GROUND FAULT CIRCUIT INTERRUPTER
GFI	GROUND FAULT INTERRUPTER
GRC	GALVANIZED RIGID STEEL CONDUIT
KVA	KILOVOLT AMPERES
KW	KILOWATT
LED	LIGHT EMITTING DIODE
MDB	MAIN DISTRIBUTION BOARD
MDP	MAIN DISTRIBUTION PANEL
MSB	MAIN SWITCHBOARD
MT, MTD	MOUNT, MOUNTED
MT	EMPTY CONDUIT WITH NYLON PULL CORD
N/A	NOT APPLICABLE
(N)	NEW
N	NEUTRAL
NEC	NATIONAL ELECTRIC CODE
NEMA	NATIONAL ELECTRICAL MANUFACTURERS ASSOCIATION
OFCI	OWNER FURNISHED, CONTRACTOR INSTALLED
OFOI	OWNER FURNISHED, OWNER INSTALLED
OS	OCCUPANCY SENSOR
PH	PHASE
PHP	PACKAGED HEAT PUMP
PNL	PANEL
REF	REFERENCE
REQD	REQUIRED
S	SWITCH
SIM	SIMILAR
TELE	TELEPHONE
TTB	TELEPHONE TERMINAL BOARD
TYP	TYPICAL
UL	UNDERWRITERS LABORATORIES
UON	UNLESS OTHERWISE NOTED
V	VOLTS, VOLTAGE
W/	WITH
W	WIRE, WHITE
WP	WEATHERPROOF
XFMR	TRANSFORMER

ELECTRICAL LEGEND

SYMBOL	DESCRIPTION
	GENERAL
X X	DETAIL NUMBER AND SHEET LOCATION
━	NEW WORK
─	EXISTING OR WORK BY OTHERS
##	CONDUIT AND WIRE TAG
⬡1	KEYED NOTE
	LIGHTING
▫□	AREA LUMINAIRE ARM MOUNTED WITH POLE AND CONCRETE BASE
	MISCELLANEOUS
#10 B-27,29,31. B-27,29,31.	BRANCH CIRCUIT WIRING. ARROW INDICATES HOME RUN TO PANEL WITH CIRCUITS AS NOTED. WIRE SIZE IS #12 AWG MINIMUM UNLESS NOTED OTHERWISE. SHORT TICK MARKS INDICATE PHASE CONDUCTORS. LONG TICK MARKS INDICATE NEUTRAL CONDUCTORS. A SINGLE CURVED TICK MARK INDICATES INSULATED GREEN GROUND CONDUCTOR. SECOND CURVED TICK MARK INDICATES "ISOLATED GROUND" (GREEN INSULATION WITH YELLOW STRIPE) CONDUCTOR.
▬	BRANCH PANEL
⌒	CIRCUIT BREAKER
⋎	CURRENT TRANSFORMER
Ⓜ	DIGITAL TYPE METER WITH VOLTMETER, AMMETER, KW METER, KVA METER, KVAR METER, AND %THD METER
⬭	EQUIPMENT CONNECTION ITEM. REFER TO SCHEDULE
▭	FLUSH MOUNT EQUIPMENT ENCLOSURE AS NOTED
▬	FLUSH WALL MOUNTED BRANCH PANEL
⊢═	GROUND ROD
•⊣	GROUNDING POINT
△	LANDING LUG
▨	MAIN DISTRIBUTION PANEL / SUB DISTRIBUTION PANEL
<Ⓜ	METER WITH CONNECTION
▭	SURFACE MOUNT EQUIPMENT ENCLOSURE AS NOTED
	RACEWAYS
─	CONDUIT CONCEALED IN WALL OR CEILING SPACE
- - -	CONDUIT ROUTED BELOW FLOOR / GRADE
─●	CONDUIT ELLED DOWN
─○	CONDUIT ELLED UP
─⟆	CONDUIT/WIRING CONTINUATION
─∃	CONDUIT/WIRING STUBBED OUT WITH END CAP OR INSULATED PLASTIC BUSHING

ELECTRICAL LEGEND

SYMBOL	DESCRIPTION
UT	UTILITY TRANSFORMER PAD/VAULT
⊣	WALL MOUNTING BRACKET
⧄	WATER PIPE GROUND CONNECTION
	CONNECTIONS / EQUIPMENT
◪	HEAVY DUTY FUSED DISCONNECT SWITCH
Ⓙ OR J	JUNCTION BOX
~Ⓙ	JUNCTION BOX WITH FLEX CONNECTION TO EQUIPMENT
Ⓙ	WALL-MOUNTED JUNCTION BOX
□	NON-FUSED DISCONNECT SWITCH
T	TRANSFORMER
PB	PULL BOX
⧄	ENCLOSED CIRCUIT BREAKER
	SWITCHES AND RECEPTACLES
⏀	DUPLEX RECEPTACLE (MULTIPLE LETTERS INDICATE MULTIPLE OPTIONS) A = ABOVE COUNTER B = CLOCK HANGER C = FLUSH CEILING MOUNTED E = EMERGENCY F = ARC FAULT PROTECTED BY BREAKER IN PANEL G = GROUND FAULT CIRCUIT INTERRUPTER H = HOSPITAL GRADE K = CHILD RESISTANT COVER L = ISOLATED GROUND P = PENDANT MOUNTED WITH CORD GRIPS. VERIFY PENDANT LENGTH S = SPLIT WIRED T = TAMPER RESISTANT SHUTTERED RECEPTACLE W = WEATHERPROOF CONTINUOUS USE COVER, GFCI PROTECTED, WITH WEATHER-RESISTANT RECEPTACLE ? = DESIGNER DEFINED
$	SINGLE POLE SWITCH 2 = DOUBLE POLE SWITCH 3 = THREE-WAY SWITCH 4 = FOUR-WAY SWITCH a THRU z (LOWERCASE) = LUMINAIRE CONTROL DESIGNATION F = FAN SPEED CONTROL K = KEY OPERATED SWITCH L = LIGHTED HANDLE M = MANUAL MOTOR STARTER WITH THERMAL OVERLOAD P = SWITCH WITH PILOT LIGHT S = SENTRY SWITCH T = INTERVAL TIMER W = WEATHERPROOF SWITCH V = LOW VOLTAGE SWITCH ? = DESIGNER DEFINED SWITCH
OS	CEILING MOUNTED OCCUPANCY SENSOR (SELF CONTAINED)
DS	CEILING MOUNTED DAYLIGHTING SENSOR
XX-1 (SEE SCHEDULE)	MOTOR / ELECTRICAL EQUIPMENT

DEVICE OUTLETS SHALL BE NO MORE THAN +48" AFF TO TOP OF BOX NOR LESS THAN +15"AFF TO BOTTOM OF BOX PER CBC 11B-308.1.2

MOUNTING OVER OBSTRUCTION DETAIL

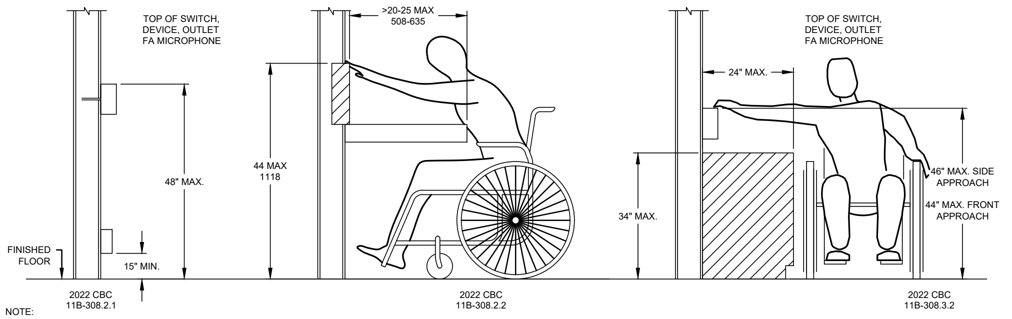

NOTE:

1. THIS DETAIL APPLIES TO MOUNTING OF ANY MECHANICAL AND ELECTRICAL DEVICE WHICH CONTAINS AN OPERABLE PART THAT IS ADJUSTABLE BY THE OCCUPANT. THIS DOES NOT APPLY TO SENSORS OR CONTROLS THAT ARE ONLY ADJUSTABLE THROUGH THE BUILDING AUTOMATION SYSTEM (IE: TEMPERATURE AND HUMIDITY SENSORS).

ELECTRICAL GENERAL NOTES

A. ALL WORK SHALL COMPLY WITH ALL LOCAL AND STATE CODES AND AUTHORITIES HAVING JURISDICTION.

B. THE CONTRACTOR SHALL SECURE AND PAY FOR ALL REQUIRED PERMITS AND ARRANGE ALL REQUIRED INSPECTIONS.

C. THE CONTRACTOR SHALL COORDINATE HIS WORK WITH OTHER CONTRACTORS AND TRADES.

D. THESE DRAWINGS, AS PREPARED, ARE DIAGRAMMATIC BUT SHALL BE FOLLOWED AS CLOSELY AS CONSTRUCTION OF THE PROJECT AND THE WORK OF THE TRADES WILL PERMIT. EQUIPMENT LOCATIONS INDICATED ARE APPROXIMATE. COORDINATE EXACT LOCATIONS AND REQUIRED CLEARANCES WITH EQUIPMENT SUPPLIER AND ALL TRADES PRIOR TO INSTALLATION.

E. THE CONTRACTOR SHALL FURNISH AND INSTALL ALL THE EQUIPMENT INDICATED WITHIN THESE DRAWINGS UNLESS OTHERWISE NOTED. VERIFY LOCATION AND DIMENSIONS IN THE FIELD PRIOR TO FABRICATION AND / OR INSTALLATION.

F. ALL ROOF PENETRATIONS SHALL BE AT THE CONTRACTOR'S EXPENSE. COORDINATE WITH OWNER'S ROOFING CONTRACTOR SO AS NOT TO VOID ANY EXISTING ROOF WARRANTIES.

G. THE ENTIRE INSTALLATION SHALL BE GUARANTEED FREE OF DEFECTS AND CONTRACTOR SHALL REPAIR AND / OR REPLACE ANY DEFECTIVE MATERIALS OR EQUIPMENT AT NO COST TO THE OWNER FOR A MINIMUM PERIOD OF ONE YEAR FROM THE DATE OF ACCEPTANCE BY ARCHITECT OR ENGINEER.

H. ALL WORK SHALL BE SUBJECT TO THE ACCEPTANCE AND APPROVAL OF THE ARCHITECT AND OWNER. THE ARCHITECT SHALL BE NOTIFIED OF ANY AND ALL DISCREPANCIES BETWEEN FIELD CONDITIONS AND THE CONTRACT DOCUMENTS BEFORE PROCEEDING WITH THAT PORTION OF THE WORK. FAILURE OF PROPER NOTIFICATION DOES NOT RELIEVE THE CONTRACTOR. THE CONTRACTOR SHALL CORRECT ANY AND ALL WORK ARISING FROM SUCH FAILURE TO COORDINATE DISCREPANCIES TO THE SATISFACTION OF THE ARCHITECT WITHOUT ADDITIONAL COST TO THE OWNER.

I. ALL JUNCTION BOXES SHOWN ON THIS PLAN ARE TO BE INSTALLED ABOVE THE FINISHED CEILING.

ELECTRICAL DEMOLITION NOTES

A. THE ELECTRICAL DRAWING SET IS PREPARED BASE OF LIMITED FIELD OBSERVATION ONLY. ACTUAL CONDITIONS MAY VARY IN FIELD. ELECTRICAL CONTRACTOR IS RESPONSIBLE TO FIELD VERIFY EXISTING CONDITIONS AND REPORT ANY DISCREPANCIES TO THE ELECTRICAL ENGINEER OF RECORD PRIOR TO BID.

B. SEE ARCHITECTURAL DRAWINGS AND SPECIFICATIONS FOR PHASES OF DEMOLITION AND CONSTRUCTION. COORDINATE WITH GENERAL CONSTRUCTION.

C. DISCONNECT AND MOVE ALL ELECTRICAL DEVICES AND LIGHTING FIXTURES IN DEMOLITION AREAS UNLESS NOTED OTHERWISE.

D. DISCONNECT AND REMOVE ALL ELECTRICAL DEVICES IN WALLS TO BE DEMOLISHED. WALLS TO BE DEMOLISHED ARE SHOWN DASHED. DISCONNECT AND REMOVE ASSOCIATED CONDUIT AND WIRE BACK TO LAST REMAINING DEVICE. FURNISH AND INSTALL CONDUIT AND WIRE AS NECESSARY TO CONTINUITY OF CIRCUIT(S) TO ANY EXISTING DEVICES TO REMAIN. COORDINATE AND VERIFY REQUIREMENTS WITH NEW WORK IN AREA.

E. FURNISH AND INSTALL CONDUIT AND WIRE AS NECESSARY FOR CONTINUITY OF ANY FEEDERS OR BRANCH CIRCUIT ORIGINATING OUTSIDE THE DEMOLITION AREA THAT SERVES ANY ELECTRICAL EQUIPMENT OR DEVICES TO REMAIN AFTER DEMOLITION. MODIFY OR REPLACE AS REQUIRED.

F. FURNISH AND INSTALL CONDUIT AND/OR COMMUNICATIONS/DATA WIRING AS NECESSARY FOR CONTINUITY OF ANY WIRING ORIGINATING OUTSIDE THE DEMOLITION AREA THAT SERVES ANY COMMUNICATION/DATA EQUIPMENT OR DEVICES TO REMAIN AFTER DEMOLITION. MODIFY OR REPLACE AS REQUIRED.

G. DISCONNECT AND REMOVE LIGHT SWITCHES IN DEMOLITION AREAS AS NECESSARY TO ACCOMMODATE NEW DOOR CONFIGURATIONS.

H. DISCONNECT AND REMOVE ANY EXISTING ELECTRICAL DEVICES AND BACK BOXES AS NECESSARY WHERE NEW WALL CONSTRUCTION WILL INTERSECT AN EXISTING WALL. FURNISH AND INSTALL CONDUIT AND WIRE AS REQUIRED FOR CONTINUITY OF CIRCUIT(S).

I. FURNISH AND INSTALL BLANK COVER PLATES OVER ALL EXISTING UNUSED OPENINGS.

MEP COMPONENT ANCHORAGE NOTE

ALL MECHANICAL, PLUMBING, AND ELECTRICAL COMPONENTS SHALL BE ANCHORED AND INSTALLED PER THE DETAILS ON THE DSA-APPROVED CONSTRUCTION DOCUMENTS. THE FOLLOWING COMPONENTS SHALL BE ANCHORED OR BRACED TO MEET THE FORCE AND DISPLACEMENT REQUIREMENTS PRESCRIBED IN THE 2022 CBC SECTIONS 1617A.1.18 THROUGH 1617A.1.26 AND ASCE 7-16 CHAPTERS 13, 26, AND 30:

1. ALL PERMANENT EQUIPMENT AND COMPONENTS.
2. TEMPORARY, MOVABLE OR MOBILE EQUIPMENT THAT IS PERMANENTLY ATTACHED (E.G., HARD WIRED) TO THE BUILDING UTILITY SERVICES SUCH AS ELECTRICITY, GAS OR WATER. “PERMANENTLY ATTACHED” SHALL INCLUDE ALL ELECTRICAL CONNECTIONS EXCEPT PLUGS FOR 110/220 VOLT RECEPTACLES HAVING A FLEXIBLE CABLE.
3. TEMPORARY, MOVABLE OR MOBILE EQUIPMENT WHICH IS HEAVIER THAN 400 POUNDS OR HAS A CENTER OF MASS LOCATED 4 FEET OR MORE ABOVE THE ADJACENT FLOOR OR ROOF LEVEL THAT DIRECTLY SUPPORT THE COMPONENT IS REQUIRED TO BE RESTRAINED IN A MANNER APPROVED BY DSA.

THE FOLLOWING MECHANICAL AND ELECTRICAL COMPONENTS SHALL BE POSITIVELY ATTACHED TO THE STRUCTURE BUT NEED NOT DEMONSTRATE DESIGN COMPLIANCE WITH THE REFERENCES NOTED ABOVE. THESE COMPONENTS SHALL HAVE FLEXIBLE CONNECTIONS PROVIDED BETWEEN THE COMPONENT AND ASSOCIATED DUCTWORK, PIPING, AND CONDUIT. FLEXIBLE CONNECTIONS MUST ALLOW MOVEMENT IN BOTH TRANSVERSE AND LONGITUDINAL DIRECTIONS:

A. COMPONENTS WEIGHING LESS THAN 400 POUNDS AND HAVING A CENTER OF MASS LOCATED 4 FEET OR LESS ABOVE THE ADJACENT FLOOR OR ROOF LEVEL THAT DIRECTLY SUPPORT THE COMPONENT.

B. COMPONENTS WEIGHING LESS THAN 20 POUNDS, OR IN THE CASE OF DISTRIBUTED SYSTEMS, LESS THAN 5 POUNDS PER FOOT, WHICH ARE SUSPENDED FROM A ROOF OR FLOOR OR HUNG FROM A WALL.

THE ANCHORAGE OF ALL MECHANICAL, ELECTRICAL AND PLUMBING COMPONENTS SHALL BE SUBJECT TO THE APPROVAL OF THE DESIGN PROFESSIONAL IN GENERAL RESPONSIBLE CHARGE OR STRUCTURAL ENGINEER DELEGATED RESPONSIBILITY AND ACCEPTANCE BY DSA. THE PROJECT INSPECTOR WILL VERIFY THAT ALL COMPONENTS AND EQUIPMENT HAVE BEEN ANCHORED IN ACCORDANCE WITH THE ABOVE REQUIREMENTS.

PIPING, DUCTWORK AND ELECTRICAL DISTRIBUTION SYSTEM BRACING NOTE

PIPING, DUCTWORK, AND ELECTRICAL DISTRIBUTION SYSTEMS SHALL BE BRACED TO COMPLY WITH THE FORCES AND DISPLACEMENTS PRESCRIBED IN ASCE 7 SECTION 13.3 AS DEFINED IN ASCE 7 SECTIONS 13.6.5, 13.6.6, 13.6.7, 13.6.8; AND 2022 CBC, SECTIONS 1617A.1.24, 1617A.1.25 AND 1617A.1.26.

THE METHOD OF SHOWING BRACING AND ATTACHMENTS TO THE STRUCTURE FOR THE IDENTIFIED DISTRIBUTION SYSTEM ARE AS NOTED BELOW. THE MEP DESIGN PROFESSIONAL ENGINEER RESPONSIBLE FOR CONTENT ON THESE SHEETS HAS VERIFIED THAT THE DESIGN METHODS IDENTIFIED BELOW ARE IN ACCORDANCE WITH DSA IR 16-13.

MECHANICAL PIPING(MP), MECHANICAL DUCTS(MD), PLUMBING PIPING(PP), ELECTRICAL DISTRIBUTION SYSTEMS(E):

MP☐ MD☐ PP☐ E☒ OPTION 1: DETAILED ON THE APPROVED DRAWINGS WITH PROJECT SPECIFIC NOTES AND DETAILS.
MP☐ MD☐ PP☐ E☐ OPTION 2: DESIGN BASED ON OSHPD OPM, WITHIN PROJECT SUBMITTAL
MP☐ MD☐ PP☐ E☐ OPTION 3: DESIGN BASED ON OSHPD OPM, DEFERRED SUBMITTAL

SHEET INDEX

E0.1	ELECTRICAL COVER SHEET
E0.2	ELECTRICAL ONE-LINE DIAGRAM & SCHEDULES
E0.3	SPORTS LIGHTING DIAGRAM
E1.1	ELECTRICAL DEMO PARTIAL SITE PLAN 1
E1.2	ELECTRICAL DEMO PARTIAL SITE PLAN 2
E2.0	ELECTRICAL OVERALL SITE PLAN
E2.1	ELECTRICAL PARTIAL SITE PLAN 1
E2.2	ELECTRICAL PARTIAL SITE PLAN 2
E2.3	ELECTRICAL ENLARGED PLANS
E3.1	PHOTOMETRIC PARTIAL SITE PLAN 1
E3.2	PHOTOMETRIC PARTIAL SITE PLAN 2
E4.1	ELECTRICAL DETAILS
E4.2	ELECTRICAL DETAILS
E5.1	MUSCO DESIGN DRAWINGS
E5.2	MUSCO DESIGN DRAWINGS
E5.3	MUSCO DESIGN DRAWINGS
E5.4	MUSCO DESIGN DRAWINGS
E6.1	TITLE 24 LTO FORMS

IDENTIFICATION STAMP
DIV. OF THE STATE ARCHITECT
APP: 02-123587 INC:
REVIEWED FOR
SS ☑ FLS ☑ ACS ☑
DATE: 01/16/2026

VERDE DESIGN
LANDSCAPE ARCHITECTURE
CIVIL ENGINEERING
SPORT PLANNING & DESIGN
1843 Iron Point Rd. Suite 140
Folsom, CA 95630
tel: 916.415.6554
fax: 916.415.6525
www.VerdeDesignInc.com

STAMP

NATHAN A. HEARN
No. E 23927
3-31-2026
ELECTRICAL

Date Signed: 12/08/2025

CONSULTANT

capital engineering
RANCHO CORDOVA, CALIFORNIA

NH - RK/NO — PM - DESIGN TEAM
240739.00 — PROJECT NO.

SHEET TITLE
ELECTRICAL
COVER SHEET

PROJECT NAME
LODI HIGH SCHOOL
ATHLETIC FIELD
IMPROVEMENTS

PROJECT ADDRESS
3 S PACIFIC AVE
LODI, CA
95242

SUBMITTAL	DATE
50% DSA SUBMITTAL	07/31/25
100% DSA SUBMITTAL	09/25/25
DSA BACKCHECK SUBMITTAL	12/17/25
DSA BACKCHECK SUBMITTAL	01/08/26

NO.	REVISIONS	DATE
△		
△		
△		
△		
△		
△		

DRAWN BY: RK
CHECKED BY: NH
DATE ISSUED: 01/08/2026
SCALE:
PROJ. NO.: 2502700
SHEET NO.: E0.1

ELECTRICAL COVER SHEET

ALL IDEAS, DESIGNS, ARRANGEMENTS, AND PLANS INDICATED OR REPRESENTED BY THIS DRAWING ARE OWNED BY AND THE PROPERTY OF VERDE DESIGN, INC. AND WERE CREATED, EVOLVED, AND DEVELOPED FOR USE ON AND IN CONNECTION WITH THE SPECIFIED PROJECT. NONE OF SUCH IDEAS, DESIGNS, ARRANGEMENTS OR PLANS SHALL BE USED, REPRODUCED, OR PUBLISHED BY ANY METHOD, IN WHOLE OR IN PART, OR DISCLOSED TO ANY PERSON, FIRM, OR CORPORATION FOR ANY PURPOSE WHATSOEVER WITHOUT WRITTEN PERMISSION OF VERDE DESIGN, INC.

DRAWING NAME: \\capsac.lan\network\Project_Docs\2024\240739.00\1200 Drawings\1205 AutoCAD Project Files\E0.1 COVER SHEET.dwg
PLOT DATE: 12-04-25 PLOTTED BY: Rustem.Kopbayev

ALL IDEAS, DESIGNS, ARRANGEMENTS, AND PLANS INDICATED OR REPRESENTED BY THIS DRAWING ARE OWNED BY AND THE PROPERTY OF VERDE DESIGN, INC. AND WERE CREATED, EVOLVED, AND DEVELOPED FOR USE ON AND IN CONNECTION WITH THE SPECIFIED PROJECT. NONE OF SUCH IDEAS, DESIGNS, ARRANGEMENTS OR PLANS SHALL BE USED, REPRODUCED, OR PUBLISHED BY ANY METHOD, IN WHOLE OR IN PART, OR DISCLOSED TO ANY PERSON, FIRM, OR CORPORATION FOR ANY PURPOSE WHATSOEVER WITHOUT WRITTEN PERMISSION OF VERDE DESIGN, INC.

PANELBOARD SCHEDULE - L1

DESIGNATION	FEEDER NO.	POLES & AMPS	LOAD, VA LTG.	LOAD, VA RECPT.	LOAD, VA OTHER	CK	PH	CK	LOAD, VA LTG.	LOAD, VA RECPT.	LOAD, VA OTHER	POLES & AMPS	FEEDER NO.	DESIGNATION
RECEPTACLE - FIRST BASE DUGOUT (SOFTBALL)	1	1/20		360		1	A	2		360		1/20	1	RECEPTACLE - FIRST BASE DUGOUT (BASEBALL)
RECEPTACLE - THIRD BASE DUGOUT (SOFTBALL)	1	1/20		360		3	B	4		360		1/20	1	RECEPTACLE - THIRD BASE DUGOUT (BASEBALL)
RECEPTACLE - BACKSTOP (SOFTBALL)	1	1/20		360		5	C	6		360		1/20	1	RECEPTACLE - BACKSTOP (BASEBALL)
RECEPTACLE - BATTING CAGE (SOFTBALL)	1,2	1/20		360		7	A	8		360		1/20	1,2	RECEPTACLE - BATTING CAGE (BASEBALL)
SCORE BOARD (SOFTBALL)	1	1/20			300	9	B	10			300	1/20	1	SCORE BOARD (BASEBALL)
LIGHTING - DUGOUT FIRST BASE (SOFTBALL)	1	1/20	96			11	C	12				1/20		SPARE
LIGHTING - DUGOUT THIRD BASE (SOFTBALL)	1	1/20	96			13	A	14				1/20		SPARE
LIGHTING - DUGOUT FIRST BASE (BASEBALL)	1	2/20	96			15	B	16				1/20		SPARE
LIGHTING - DUGOUT THIRD BASE (BASEBALL)	1	1/20	96			17	C	18				1/20		SPARE
LIGHTING - SITE	1	2/20	340			19	A	20						SPACE
			340			21	B	22						SPACE
LIGHTING - FLAGPOLE	1	1/20	102			23	C	24						SPACE
LIGHTING CONTROL CABINET	1	1/20			100	25	A	26						SPACE
MUSCO SPORTS LIGHTING CONTROL CABINET	1	1/20			100	27	B	28						SPACE
INVERTER	1	2/30			2,900	29	C	30						SPACE
					2,900	31	A	32						SPACE
SPACE						33	B	34						SPACE
SPACE						35	C	36						SPACE
SPACE						37	A	38						SPACE
SPACE						39	B	40						SPACE
SPACE						41	C	42						SPACE
			1,166	1,440	6,300				0	1,440	300			SECTION SUB-TOTALS

CATEGORY	CONN. LOAD KVA	CONN. LOAD AMPS	DESIGN LOAD DIV.	DESIGN LOAD KVA	DESIGN LOAD AMPS
LIGHTING:	1.2	3.2	1.25	1.5	4.1
RECEPTACLE:	2.9	8.0	1.00	2.9	8.0
MOTORS:	0.0	0.0	1.00	0.0	0.0
SPECIAL LOADS:	6.6	18.3	1.00	6.6	18.3
ELECTRIC HEATING:	0.0	0.0	1.00	0.0	0.0
WATER HEATING:	0.0	0.0	1.00	0.0	0.0
EVSE/EVCS	0.0	0.0	1.25	0.0	0.0
TOTAL:	10.6	29.6		10.9	30.4

MOUNTING:	SURFACE	
VOLTS:	120/208	
PHASE/WIRE:	3/4	
MAINS SIZE:	100 AMPS	
MAINS TYPE:	MCB	
BUSS TYPE:	COPPER	
BRKR TYPE:	BOLT-IN	
A.I.C. (RMS):	65,000	
A Phase	4.9	Connected Kva
B Phase	1.9	Connected Kva
C Phase	3.9	Connected Kva

REMARKS:

FEEDER NO.:
1 = SEE BRANCH CIRCUIT SCHEDULE ON SHEET E0.2
2 = ADD ALT. #1

PANELBOARD SCHEDULE - SL1

DESIGNATION	FEEDER NO.	POLES & AMPS	LOAD, VA LTG.	LOAD, VA RECPT.	LOAD, VA OTHER	CK	PH	CK	LOAD, VA LTG.	LOAD, VA RECPT.	LOAD, VA OTHER	POLES & AMPS	FEEDER NO.	DESIGNATION
C1 - SPORTS LTG. CONTACTOR	1,2	3/30	1,943			1	A	2	3,523			3/60	1,2	C8 - SPORTS LTG. CONTACTOR
			1,943			3	B	4	3,523					
			1,943			5	C	6	3,523					
C2 - SPORTS LTG. CONTACTOR	1,2	3/30	1,610			7	A	8	1,610			3/30	1,2	C9 - SPORTS LTG. CONTACTOR
			1,610			9	B	10	1,610					
			1,610			11	C	12	1,610					
C3 - SPORTS LTG. CONTACTOR	1,2	3/60	3,503			13	A	14	1,610			3/30	1,2	C10 - SPORTS LTG. CONTACTOR
			3,503			15	B	16	1,610					
			3,503			17	C	18	1,610					
C4 - SPORTS LTG. CONTACTOR	1,2	3/60	3,503			19	A	20	2,632			3/30	1,2	C11 - SPORTS LTG. CONTACTOR
			3,503			21	B	22	2,632					
			3,503			23	C	24	2,632					
C5 - SPORTS LTG. CONTACTOR	1,2	3/30	2,507			25	A	26	2,632			3/30	1,2	C12 - SPORTS LTG. CONTACTOR
			2,507			27	B	28	2,632					
			2,507			29	C	30	2,632					
C6 - SPORTS LTG. CONTACTOR	1,2	3/30	2,659			31	A	32				1/20		SPARE
			2,659			33	B	34				1/20		SPARE
			2,659			35	C	36						SPACE
C7 - SPORTS LTG. CONTACTOR	1,2	3/60	3,831			37	A	38						SPACE
			3,831			39	B	40						SPACE
			3,831			41	C	42						SPACE
			58,669	0	0				36,027	0	0			SECTION SUB-TOTALS

CATEGORY	CONN. LOAD KVA	CONN. LOAD AMPS	DESIGN LOAD DIV.	DESIGN LOAD KVA	DESIGN LOAD AMPS
LIGHTING:	94.7	263.2	1.25	118.4	329.0
RECEPTACLE:	0.0	0.0	1.00	0.0	0.0
MOTORS:	0.0	0.0	1.00	0.0	0.0
SPECIAL LOADS:	0.0	0.0	1.00	0.0	0.0
ELECTRIC HEATING:	0.0	0.0	1.00	0.0	0.0
WATER HEATING:	0.0	0.0	1.00	0.0	0.0
EVSE/EVCS	0.0	0.0	1.25	0.0	0.0
TOTAL:	94.7	263.2		118.4	329.0

MOUNTING:	SURFACE	
VOLTS:	120/208	
PHASE/WIRE:	3/4	
MAINS SIZE:	400 AMPS	
MAINS TYPE:	MCB	
BUSS TYPE:	COPPER	
BRKR TYPE:	BOLT-IN	
A.I.C. (RMS):	65,000	
A Phase	31.6	Connected Kva
B Phase	31.6	Connected Kva
C Phase	31.6	Connected Kva

REMARKS:

FEEDER NO.:
1 = ROUTE THROUGH MUSCO CONTROL CABINET
2 = SEE FEEDER SCHEDULE ON SHEET E0.3

FEEDER SCHEDULE AND VOLTAGE DROP CALCULATION

3 PHASE FORMULA

$$VD = \frac{\sqrt{3} * L * R * A}{1000} \qquad \%VD = \frac{VD * 100\%}{V}$$

1 PHASE FORMULA

$$VD = \frac{2 * L * R * A}{1000} \qquad \%VD = \frac{VD * 100\%}{V}$$

CIRCUIT TAG	PHASE	VOLTAGE	CONDUCTOR TYPE	CONDUIT TYPE	CONDUIT FILL %	SETS	CONDUIT SIZE	CONDUCTORS	EQUIP. GND	DISTANCE (FT)	AMPS (A)	IMPEDANCE: OHMS/Kft	TOTAL %VD
P19	3	208	Cu	PVC SCH40	33.30%	1	1-1/2	4 #1	#8	20	80	0.16	0.21%
P20	3	208	Cu	PVC SCH40	29.65%	2	2-1/2	4 #4/0	#3	20	320	0.04	0.20%
P21	1	208	Cu	PVC SCH40	7.61%	1	1	2 #10	#10	20	28	1.10	0.59%

1. CONDUCTOR IMPEDANCE VALUES BASED ON CEC CHAPTER 9 TABLE 9 - EFFECTIVE IMPEDANCE FOR UNCOATED COPPER WIRES IN PVC OR STEEL CONDUIT @ 0.85 PF (OHM/kFT)

2. PER CEC 210.19(A)(1)FPN NO. 4: BRANCH CIRCUITS ARE ALOWED 3% VOLTAGE DROP AND THE MAXIMUM TOTAL VOLTAGE DROP ON BOTH FEEDERS AND BRANCH CIRCUITS TO THE FARTHEST OUTLET DOES NOT EXCEED 5%

3. FOR CIRCUITS WITH MULTIPLE SETS, THE CONDUIT FILL PERCENTAGE REPRESENTS THE FILL FOR A SINGLE SET OF CONDUCTORS IN A SINGLE CONDUIT ONLY.

CEC 215.2(A)(3) FPN No. 2

BRANCH CIRCUIT SCHEDULE

CIRCUIT TAG	PANEL - CIRCUIT	PHASE	VOLTAGE	CONDUCTOR TYPE	CONDUIT TYPE	CONDUIT FILL %	SETS	CONDUIT SIZE	CONDUCTORS	GROUND WIRE
P01	L1-1	1	120	Cu	PVC SCH40	18.28%	1	1	2 #6	#6
P02	L1-5	1	120	Cu	PVC SCH40	18.28%	1	1	2 #6	#6
P03	L1-7	1	120	Cu	PVC SCH40	18.28%	1	1	2 #6	#6
P04	L1-3	1	120	Cu	PVC SCH40	18.28%	1	1	2 #6	#6
P05	L1-8	1	120	Cu	PVC SCH40	13.20%	1	1	2 #8	#8
P06	L1-2	1	120	Cu	PVC SCH40	7.61%	1	1	2 #10	#10
P07	L1-6	1	120	Cu	PVC SCH40	4.80%	1	1	2 #12	#12
P08	L1-9	1	120	Cu	PVC SCH40	13.20%	1	1	2 #8	#8
P09	L1-10	1	120	Cu	PVC SCH40	13.20%	1	1	2 #8	#8
P12	L1-4	1	120	Cu	PVC SCH40	4.80%	1	1	2 #12	#12
P13	L1-19,21	1	208	Cu	PVC SCH40	7.61%	1	1	2 #10	#10
P14	L1-23	1	120	Cu	PVC SCH40	4.80%	1	1	2 #12	#12
P15	L1-17	1	120	Cu	PVC SCH40	4.80%	1	1	2 #12	#12
P16	L1-15	1	120	Cu	PVC SCH40	4.80%	1	1	2 #12	#12
P17	L1-13	1	120	Cu	PVC SCH40	4.80%	1	1	2 #12	#12
P18	L1-11	1	120	Cu	PVC SCH40	4.80%	1	1	2 #12	#12
P22	L1-27	1	120	Cu	PVC SCH40	4.80%	1	1	2 #12	#12
P23	INV-9	1	120	Cu	PVC SCH40	4.80%	1	1	2 #12	#12
P24	L1-25	1	120	Cu	PVC SCH40	4.80%	1	1	2 #12	#12

INVERTER OUTPUT SCHEDULE

NEW LOAD

(1) CONTACATOR 13 - EGRESS LIGHTING 8.29A @208V (1Φ)	1,724.3 VA
(1) CONTACATOR 14 - EGRESS LIGHTING 5.53A @208V (1Φ)	1,150.2 VA
(1) CONTACATOR 15 - EGRESS LIGHTING 5.53A @208V (1Φ)	1,150.2 VA
(1) CONTACATOR 16 - EGRESS LIGHTING 8.29A @208V (1Φ)	1,724.3 VA
(1) CONTROL 0.05KW @120V (1Φ)	50.0 VA
(1) SPARE KW @208V (1Φ)	0.0 VA
(1) SPARE KW @120V (1Φ)	0.0 VA
TOTAL LOADS =	5,799.1 VA
AMPS =	20.9 AMPS
+25% LIGHTING LOAD =	5.2 AMPS
TOTAL =	26 AMPS

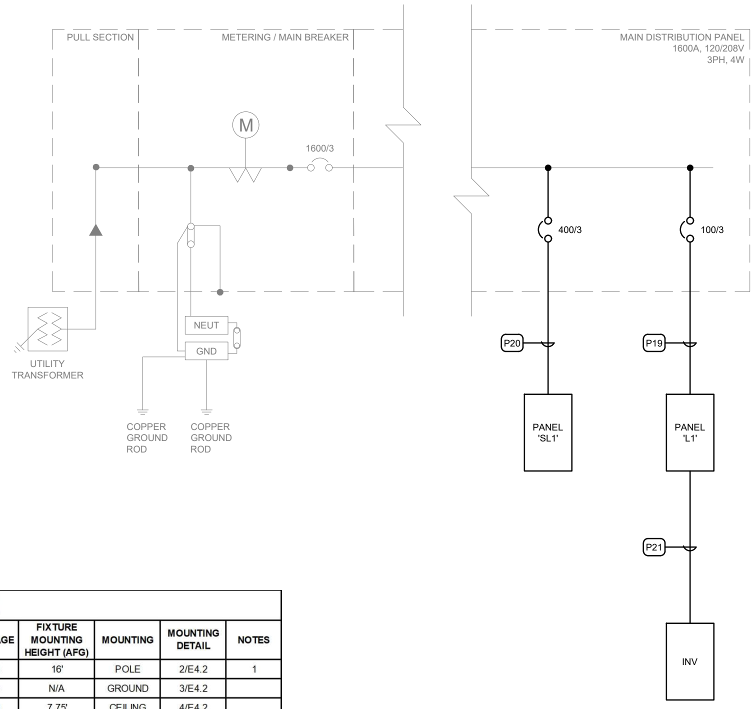

LIGHTING FIXTURE SCHEDULE

TAG	DESCRIPTION	MANUFACTURER / MODEL	LAMPS	WATTS	VOLTAGE	FIXTURE MOUNTING HEIGHT (AFG)	MOUNTING	MOUNTING DETAIL	NOTES
S1	LIGHTING POLE, SINGLE FIXTURE	GARDCO: P26-A02-840-T5W	LED	85	208	16'	POLE	2/E4.2	1
F1	FLAG LIGHTING	B-K LIGHTING: HP2-IN-LID-LCB-FFM-HDE-120-X45	LED	34	120	N/A	GROUND	3/E4.2	
C1	LINEAR LIGHTING	LITHONIA: CSVT L48 ALO3 MVOLT SWW3 80CRI	LED	24	120	7.75'	CEILING	4/E4.2	
POLE:	POLE MOUNTED EGRESS LIGHTING	MUSCO: TLC-LED-550	LED	527	208	60' - 80'	POLE	N/A	2,3

NOTES:
1 FIXTURE INCLUDES MOTION SENSOR TO PROVIDE 50% DIMMING DURING UNOCCUPIED TIMES.
2 MOUNTING HEIGHTS FOR EGRESS LIGHTING ON MUSCO POLE CAN BE FOUND ON SHEET E5.1.
3 MUSCO TO PROVIDE EGRESS LIGHTING ON POLE. WATTAGE SHOWN IS FOR EGRESS LIGHTING ONLY. NOT ALL MUSCO POLES HAVE EGRESS LIGHTING. SEE SHEETS E5.1-E5.4 FOR MORE INFORMATION. REFER TO MUSCO PLANS FOR MOUNTING INFO

GENERAL NOTES:
A:THIS LIGHTING SCHEDULE IS NOT COMPLETE WITHOUT A COPY OF THE PROJECT MANUAL CONTAINING ELECTRICAL SPECIFICATIONS.
B:SPECIFIED MANUFACTURERS ARE APPROVED TO SUBMIT BID. INCLUSION DOES NOT RELIEVE MANUFACTURER FROM SUPPLYING PRODUCT AS DESCRIBED.
C:PROVIDE SUBMITTALS THAT INCLUDE LIGHTING FIXTURE, LED, AND DRIVER INFORMATION FOR EACH FIXTURE, WITH APPLICABLE OPTIONS CLEARLY CHECKED OR HIGHLIGHTED. SUBMITTALS NOT INCLUDING THIS INFORMATION WILL BE RETURNED AS REJECTED BY THE ENGINEER OF RECORD.
D:PROVIDE COMMISSIONING OF THE LIGHTING AND LIGHTING CONTROLS IN ACCORDANCE WITH CALIFORNIA TITLE 24 COMMISSIONING REQUIREMENTS.

IDENTIFICATION STAMP
DIV. OF THE STATE ARCHITECT
APP: 02-123587 INC:
REVIEWED FOR
SS ☑ FLS ☑ ACS ☑
DATE: 01/16/2026

VERDE DESIGN
LANDSCAPE ARCHITECTURE
CIVIL ENGINEERING
SPORT PLANNING & DESIGN
1843 Iron Point Rd. Suite 140
Folsom, CA 95630
tel: 916.415.6554
fax: 916.415.6525
www.VerdeDesigninc.com

STAMP

NATHAN A. HEARN
No. E 23927
3-31-2026
Nathan A. Hearn
Date Signed: 12/08/2025

CONSULTANT

capital engineering
RANCHO CORDOVA, CALIFORNIA

NH - RK/NO	240739.00
PM - DESIGN TEAM	PROJECT NO.

SHEET TITLE
ELECTRICAL
ONE-LINE DIAGRAM
& SCHEDULES

PROJECT NAME
LODI HIGH SCHOOL
ATHLETIC FIELD
IMPROVEMENTS

PROJECT ADDRESS
3 S PACIFIC AVE
LODI, CA
95242

SUBMITTAL	DATE
50% DSA SUBMITTAL	07/31/25
100% DSA SUBMITTAL	09/25/25
DSA BACKCHECK SUBMITTAL	12/17/25
DSA BACKCHECK SUBMITTAL	01/08/26

NO.	REVISIONS	DATE
△		
△		
△		
△		
△		
△		

DRAWN BY RK	CHECKED BY NH
DATE ISSUED 01/08/2026	SCALE

PROJ. NO.
2502700

SHEET NO.
E0.2

DRAWING NAME: \\capsac.lan\network\Project_Docs\2024\240739.00\1200 Drawings\1205 AutoCAD Project Files\E0.2 ONE-LINE DIAGRAM & SCHEDULES.dwg
PLOT DATE: 12-04-25 PLOTTED BY: Rustem.Kopbayev

SPORTS LIGHTING FEEDER SCHEDULE

ID	CONDUIT SIZE	CONDUIT FILL %	CONTACTOR CIRCUIT ID	PHASE CONDUCTORS	EQUIP. GND.	PANEL - CIRCUIT
M01	1-1/2	24.57%	C1	3 #8	#10	SL1-1,3,5
			C2	3 #8		SL1-7,9,11
			C3	3 #4		SL1-13,15,17
	1-1/2	24.57%	C4	3 #4	#10	SL1-19,21,23
			C5	3 #8		SL1-25,27,29
			C6	3 #8		SL1-31,33,35
	1-1/2	31.49%	C7	3 #4	#10	SL1-37,39,41
			C8	3 #4		SL1-2,4,6
			C9	3 #8		SL1-8,10,12
	1-1/2	17.65%	C10	3 #8	#10	SL1-14,16,18
			C11	3 #8		SL1-20,22,24
			C12	3 #8		SL1-26,28,30
	1-1/2	15.81%	C13	2 #8	#10	INV-1,2
			C14	2 #8		INV-3,4
			C15	2 #8		INV-5,6
			C16	2 #8		INV-7,8
M02	1	15.22%	C5	3 #10	#10	SL1-25,27,29
			C15	2 #10		INV-5,6
M03	2	26.40%	C1	3 #3	#4	SL1-1,3,5
			C2	3 #4		SL1-7,9,11
			C3	3 #4		SL1-13,15,17
	1-1/2	24.57%	C6	3 #8	#10	SL1-31,33,35
			C8	3 #4		SL1-2,4,6
			C10	3 #8		SL1-14,16,18
	1-1/2	16.70%	C13	2 #4	#4	INV-1,2
			C14	2 #10		INV-3,4
			C16	2 #10		INV-7,8
M04	1	15.22%	C6	3 #10	#10	SL1-31,33,35
			C16	2 #10		INV-7,8
M05	2	30.80%	C1	3 #4	#6	SL1-1,3,5
			C2	3 #4		SL1-7,9,11
			C3	3 #1		SL1-13,15,17
	1-1/2	29.04%	C8	3 #4	#4	SL1-2,4,6
			C10	3 #4		SL1-14,16,18
	1	34.78%	C13	2 #4	#4	INV-1,2
			C14	2 #10		INV-3,4
M06	1	37.32%	C8	3 #4	#10	SL1-2,4,6
			C13	2 #10		INV-1,2
M07	1-1/2	29.04%	C1	3 #4	#4	SL1-1,3,5
			C2	3 #4		SL1-7,9,11
	2	24.25%	C3	3 #1	#4	SL1-13,15,17
			C10	3 #4		SL1-14,16,18
	1-1/2	19.62%	C13	2 #2	#2	INV-1,2
			C14	2 #10		INV-3,4
M08	1-1/2	36.04%	C3	3 #1	#4	SL1-13,15,17
			C13	2 #4		INV-1,2
M09	1-1/2	32.98%	C1	3 #4	#6	SL1-1,3,5
			C2	3 #8		SL1-7,9,11
			C10	3 #4		SL1-14,16,18
	1	34.78%	C13	2 #4	#4	INV-1,2
			C14	2 #10		INV-3,4
M10	1-1/2	18.72%	C10	3 #4	#4	SL1-14,16,18
			C13	2 #10		INV-1,2
M11	1-1/2	32.04%	C1	3 #3	#3	SL1-1,3,5
			C2	3 #4		SL1-7,9,11
	1-1/2	19.62%	C13	2 #2	#2	INV-1,2
			C14	2 #10		INV-3,4
M12	1	22.67%	C1	3 #8	#8	SL1-1,3,5
			C13	2 #10		INV-1,2
M13	1-1/2	18.72%	C2	3 #4	#4	SL1-7,9,11
			C14	2 #10		INV-3,4
M14	2	26.63%	C4	3 #1	#6	SL1-19,21,23
			C7	3 #4		SL1-37,39,41
			C9	3 #8		SL1-8,10,12
	1-1/2	31.13%	C11	3 #4	#6	SL1-20,22,24
			C12	3 #4		SL1-26,28,30
			C13	2 #8		INV-1,2
M15	1	37.32%	C7	3 #4	#10	SL1-37,39,41
			C13	2 #10		INV-1,2
M16	2	26.63%	C4	3 #1	#6	SL1-19,21,23
			C9	3 #8		SL1-8,10,12
			C11	3 #4		SL1-20,22,24
	1-1/2	18.72%	C12	3 #4	#4	SL1-26,28,30
			C13	2 #10		INV-1,2
M17	1-1/2	26.06%	C9	3 #8	#6	SL1-8,10,12
			C11	3 #8		SL1-20,22,24
			C12	3 #4		SL1-26,28,30
M18	1	10.14%	C9	3 #10	#10	SL1-8,10,12
M19	1-1/2	35.77%	C11	3 #4	#2	SL1-20,22,24
			C12	3 #2		SL1-26,28,30
M20	1	10.14%	C11	3 #10	#10	SL1-20,22,24
M21	1-1/2	23.32%	C12	3 #2	#2	SL1-26,28,30
M22	1-1/2	34.26%	C4	3 #1/0	#6	SL1-19,21,23
			C13	2 #8		INV-1,2

SPORTS LIGHITNG VOLTAGE DROP CALCULATION

3 PHASE FORMULA

$$VD = \frac{\sqrt{3} * L * R * A}{1000} \qquad \%VD = \frac{VD * 100\%}{V}$$

1 PHASE FORMULA

$$VD = \frac{2 * L * R * A}{1000} \qquad \%VD = \frac{VD * 100\%}{V}$$

CIRCUIT	VOLTAGE	PHASE	CONDUCTOR TYPE	DISTANCE (FT)	AMPS	TOTAL %VD
C1	208	3	Cu	960	16.18	2.82%
C2	208	3	Cu	1,100	13.41	2.71%
C3	208	3	Cu	790	29.17	2.84%
C4	208	3	Cu	1,100	29.17	2.79%
C5	208	3	Cu	50	20.88	0.59%
C6	208	3	Cu	310	22.14	2.91%
C7	208	3	Cu	200	31.9	1.09%
C8	208	3	Cu	460	29.34	2.62%
C9	208	3	Cu	480	13.41	2.71%
C10	208	3	Cu	770	13.41	2.68%
C11	208	3	Cu	620	21.92	2.87%
C12	208	3	Cu	860	21.92	2.85%
C13	208	1	Cu	2,170	8.29	2.91%
C14	208	1	Cu	1,100	5.53	2.93%
C15	208	1	Cu	50	5.53	0.11%
C16	208	1	Cu	310	8.29	0.81%

1. CONDUCTOR IMPEDANCE VALUES BASED ON CEC CHAPTER 9 TABLE 9 - EFFECTIVE IMPEDANCE FOR UNCOATED COPPER WIRES IN PVC OR STEEL CONDUIT @ 0.85 PF (OHM/kFT)

2. PER CEC 210.19(A)(1)FPN NO. 4: BRANCH CIRCUITS ARE ALOWED 3% VOLTAGE DROP AND THE MAXIMUM TOTAL VOLTAGE DROP ON BOTH FEEDERS AND BRANCH CIRCUITS TO THE FARTHEST OUTLET DOES NOT EXCEED 5%

* CIRCUITS WITH ASTERISKS ARE ROUTED TO CONTROL CABINET #2. ALL OTHER CIRCUITS ARE ROUTED TO CONTROL CABINET #1.

CEC 215.2(A)(3) FPN No. 2

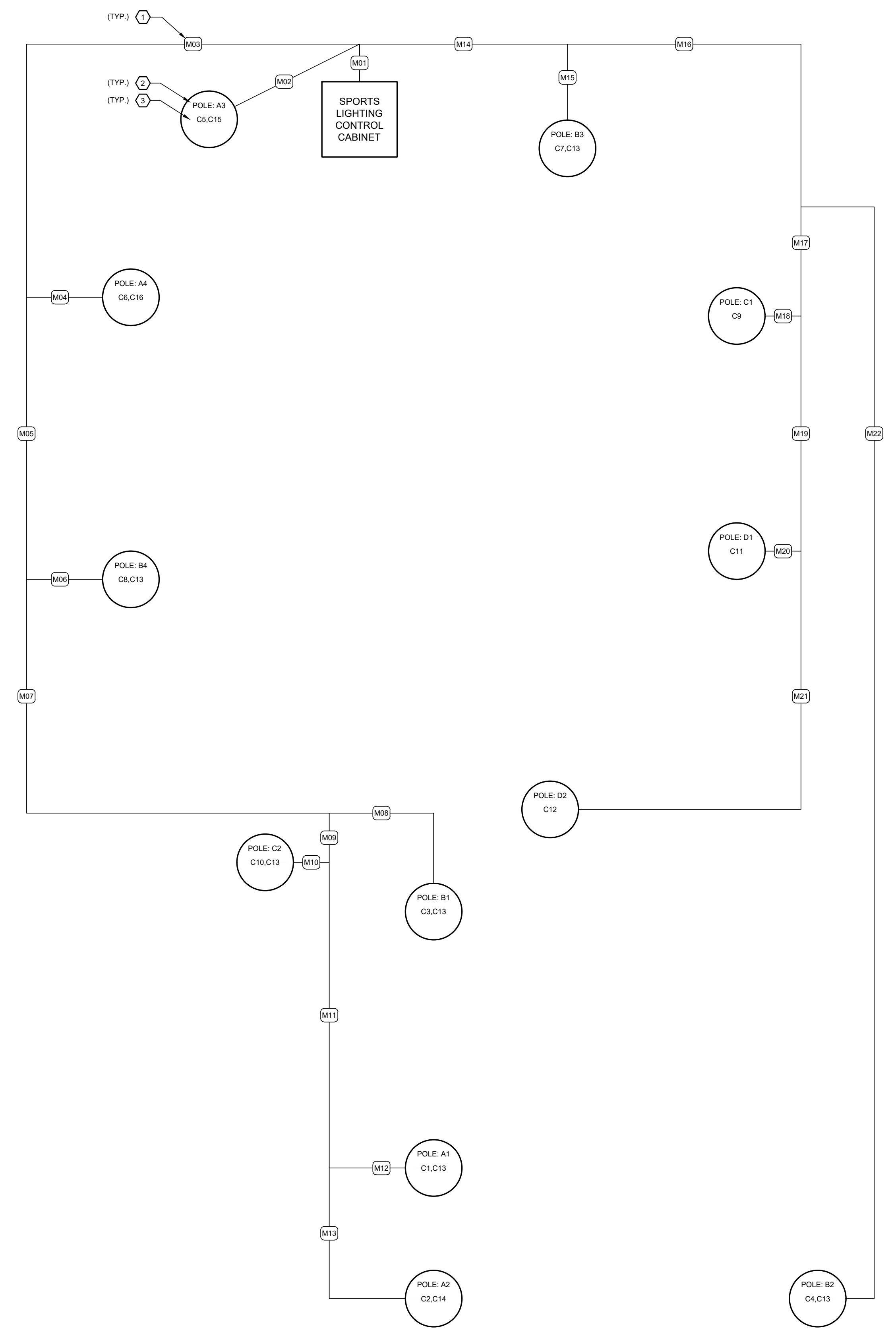

SPORTS LIGHTING DIAGRAM

SCALE : N/A

2
E0.3

NOTES:

1. LOCATIONS OF POLES ARE DIAGRAMMATIC AND NOT TO SCALE. SEE SHEETS E2.1-E2.3 FOR POLE LOCATIONS.

KEY NOTES:

1. REFER TO SPORTS LIGHTING FEEDER SCHEDULE ON SHEET E0.3 FOR CONDUIT, WIRE, AND CIRCUIT INFORMATION FOR THE CORRESPONDING ID.
2. POLE ID CORRESPONDS TO LOCATION OF MUSCO SPORTS LIGHTING POLES ON SHEETS E2.1-E2.3.
3. REFER TO CONTROL SUMMARY ON 1/E0.3 FOR CONTACTOR AND LOAD INFORMATION FOR CORRESPONDING CONTACTOR ID IN CABINET 1.

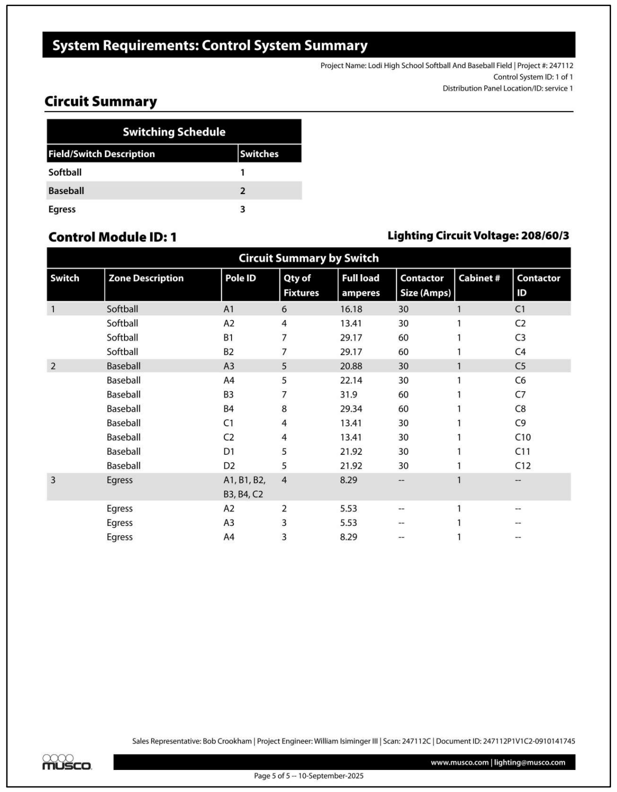

System Requirements: Control System Summary

Project Name: Lodi High School Softball And Baseball Field | Project #: 247112
Control System ID: 1 of 1
Distribution Panel Location/ID: service 1

Circuit Summary

Switching Schedule	
Field/Switch Description	**Switches**
Softball	**1**
Baseball	**2**
Egress	**3**

Control Module ID: 1 **Lighting Circuit Voltage: 208/60/3**

Circuit Summary by Switch

Switch	Zone Description	Pole ID	Qty of Fixtures	Full load amperes	Contactor Size (Amps)	Cabinet #	Contactor ID
1	Softball	A1	6	16.18	30	1	C1
	Softball	A2	4	13.41	30	1	C2
	Softball	B1	7	29.17	60	1	C3
	Softball	B2	7	29.17	60	1	C4
2	Baseball	A3	5	20.88	30	1	C5
	Baseball	A4	5	22.14	30	1	C6
	Baseball	B3	7	31.9	60	1	C7
	Baseball	B4	8	29.34	60	1	C8
	Baseball	C1	4	13.41	30	1	C9
	Baseball	C2	4	13.41	30	1	C10
	Baseball	D1	5	21.92	30	1	C11
	Baseball	D2	5	21.92	30	1	C12
3	Egress	A1, B1, B2, B3, B4, C2	4	8.29	--	1	--
	Egress	A2	2	5.53	--	1	--
	Egress	A3	3	5.53	--	1	--
	Egress	A4	3	8.29	--	1	--

Sales Representative: Bob Crookham | Project Engineer: William Isiminger III | Scan: 247112C | Document ID: 247112P1V1C2-0910141745

musco

www.musco.com | lighting@musco.com

Page 5 of 5 -- 10-September-2025

SYSTEM SUMMARY CONTROL CABINET

SCALE : N/A

1
E0.3

IDENTIFICATION STAMP
DIV. OF THE STATE ARCHITECT
APP: 02-123587 INC:
REVIEWED FOR
SS ☑ FLS ☑ ACS ☑
DATE: 01/16/2026

VERDE DESIGN
LANDSCAPE ARCHITECTURE
CIVIL ENGINEERING
SPORT PLANNING & DESIGN
1843 Iron Point Rd. Suite 140
Folsom, CA 95630
tel: 916.415.6554
fax: 916.415.6525
www.VerdeDesignInc.com

STAMP

NATHAN A. HEARN
No. E 23927
3-31-2026
Date Signed: 12/08/2025

CONSULTANT

capital engineering
Rancho Cordova, California

NH - RK/NO 240739.00
PM - DESIGN TEAM PROJECT NO.

SHEET TITLE
SPORTS LIGHTING DIAGRAM

PROJECT NAME
LODI HIGH SCHOOL ATHLETIC FIELD IMPROVEMENTS

PROJECT ADDRESS
3 S PACIFIC AVE
LODI, CA
95242

SUBMITTAL	DATE
50% DSA SUBMITTAL	07/31/25
100% DSA SUBMITTAL	09/25/25
DSA BACKCHECK SUBMITTAL	12/17/25
DSA BACKCHECK SUBMITTAL	01/08/26

NO.	REVISIONS	DATE
△		
△		
△		
△		
△		
△		

DRAWN BY: RK
CHECKED BY: NH
DATE ISSUED: 01/08/2026
SCALE: N/A
PROJ. NO.: 2502700
SHEET NO.: E0.3

SPORTS LIGHTING DIAGRAM

ALL IDEAS, DESIGNS, ARRANGEMENTS, AND PLANS INDICATED OR REPRESENTED BY THIS DRAWING ARE OWNED BY AND THE PROPERTY OF VERDE DESIGN, INC. AND WERE CREATED, EVOLVED, AND DEVELOPED FOR USE ON AND IN CONNECTION WITH THE SPECIFIED PROJECT. NONE OF SUCH IDEAS, DESIGNS, ARRANGEMENTS OR PLANS SHALL BE USED, REPRODUCED, OR PUBLISHED BY ANY METHOD, IN WHOLE OR IN PART, OR DISCLOSED TO ANY PERSON, FIRM, OR CORPORATION FOR ANY PURPOSE WHATSOEVER WITHOUT WRITTEN PERMISSION OF VERDE DESIGN, INC.

DRAWING NAME: \\capsac.lan\network\Project_Docs\2024\240739.00\1200 Drawings\1205 AutoCAD Project Files\E0.3 SPORTS LIGHTING DIAGRAM.dwg
PLOT DATE: 12-04-25 PLOTTED BY: Rustem.Kopbayev

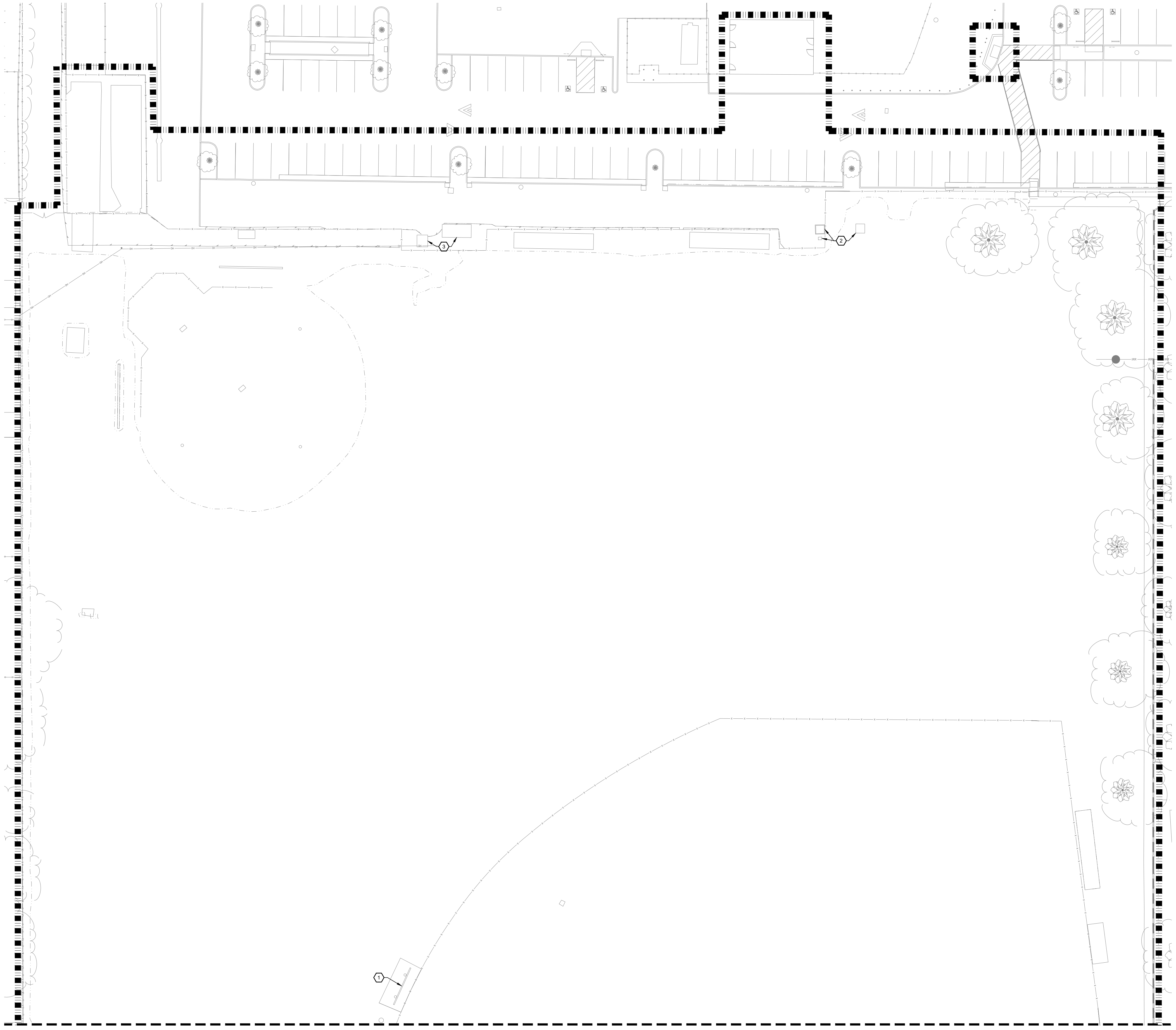

MATCHLINE - REFER TO SHEET E1.2

ELECTRICAL PARTIAL SITE PLAN

SCALE : 1" = 20'-0"

1
E1.1

N

KEY NOTES:

1. EXISTING SCOREBOARD TO BE REMOVED. DEMOLISH POWER AND DATA CONDUITS. CUT EXISTING CONDUIT AND ABANDON AT 24" BELOW GRADE. REMOVE ALL WIRES AND EQUIPMENT ABOVE-GRADE BACK TO SOURCE. BACKFILL CONDUIT WITH DIRT.
2. EXISTING PULL BOXES, VAULTS, AND LIDS TO REMAIN. PROTECT IN PLACE.
3. EXISTING MAIN SWITCHBOARD AND TRANSFORMER TO REMAIN. PROTECT IN PLACE.

IDENTIFICATION STAMP
DIV. OF THE STATE ARCHITECT
APP: 02-123587 INC:
REVIEWED FOR
SS ☑ FLS ☑ ACS ☑
DATE: 01/16/2026

VERDE DESIGN
LANDSCAPE ARCHITECTURE
CIVIL ENGINEERING
SPORT PLANNING & DESIGN
1843 Iron Point Rd. Suite 140
Folsom, CA 95630
tel: 916.415.6554
fax: 916.415.6525
www.VerdeDesignInc.com

STAMP

NATHAN A. HEARN
No. E 23927
3-31-2026

Date Signed: 12/08/2025

CONSULTANT

capital engineering
RANCHO CORDOVA, CALIFORNIA

NH - RK/NO	240739.00
PM - DESIGN TEAM	PROJECT NO.

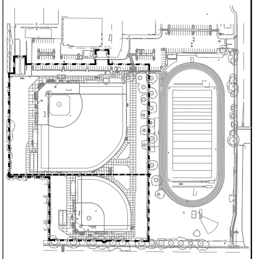

SHEET TITLE

ELECTRICAL DEMO
PARTIAL SITE PLAN 1

PROJECT NAME

LODI HIGH SCHOOL
ATHLETIC FIELD
IMPROVEMENTS

PROJECT ADDRESS

3 S PACIFIC AVE
LODI, CA
95242

SUBMITTAL	DATE
50% DSA SUBMITTAL	07/31/25
100% DSA SUBMITTAL	09/25/25
DSA BACKCHECK SUBMITTAL	12/17/25
DSA BACKCHECK SUBMITTAL	01/08/26

NO.	REVISIONS	DATE
△		
△		
△		
△		
△		
△		

DRAWN BY RK	CHECKED BY NH
DATE ISSUED 01/08/2026	SCALE 1" = 20'-0"

PROJ. NO.
2502700

SHEET NO.
E1.1

ELECTRICAL DEMO PARTIAL SITE PLAN 1

ALL IDEAS, DESIGNS, ARRANGEMENTS, AND PLANS INDICATED OR REPRESENTED BY THIS DRAWING ARE OWNED BY AND THE PROPERTY OF VERDE DESIGN, INC. AND WERE CREATED, EVOLVED, AND DEVELOPED FOR USE ON AND IN CONNECTION WITH THE SPECIFIED PROJECT. NONE OF SUCH IDEAS, DESIGNS, ARRANGEMENTS OR PLANS SHALL BE USED, REPRODUCED, OR PUBLISHED BY ANY METHOD, IN WHOLE OR IN PART, OR DISCLOSED TO ANY PERSON, FIRM, OR CORPORATION FOR ANY PURPOSE WHATSOEVER WITHOUT WRITTEN PERMISSION OF VERDE DESIGN, INC.

DRAWING NAME: \\capsac.lan\network\Project_Docs\2024\240739.00\1200 Drawings\1205 AutoCAD Project Files\E1.1-E1.2 DEMO SITE PLAN.dwg
PLOT DATE: 12-04-25 PLOTTED BY: Rustem.Kopbayev

⬡# KEY NOTES:

1. DEMOLISH POWER AND DATA CONDUITS IN DUGOUT. CUT EXISTING CONDUIT AND ABANDON AT 24" BELOW GRADE. REMOVE ALL WIRES AND EQUIPMENT ABOVE-GRADE BACK TO SOURCE. BACKFILL CONDUIT WITH DIRT.

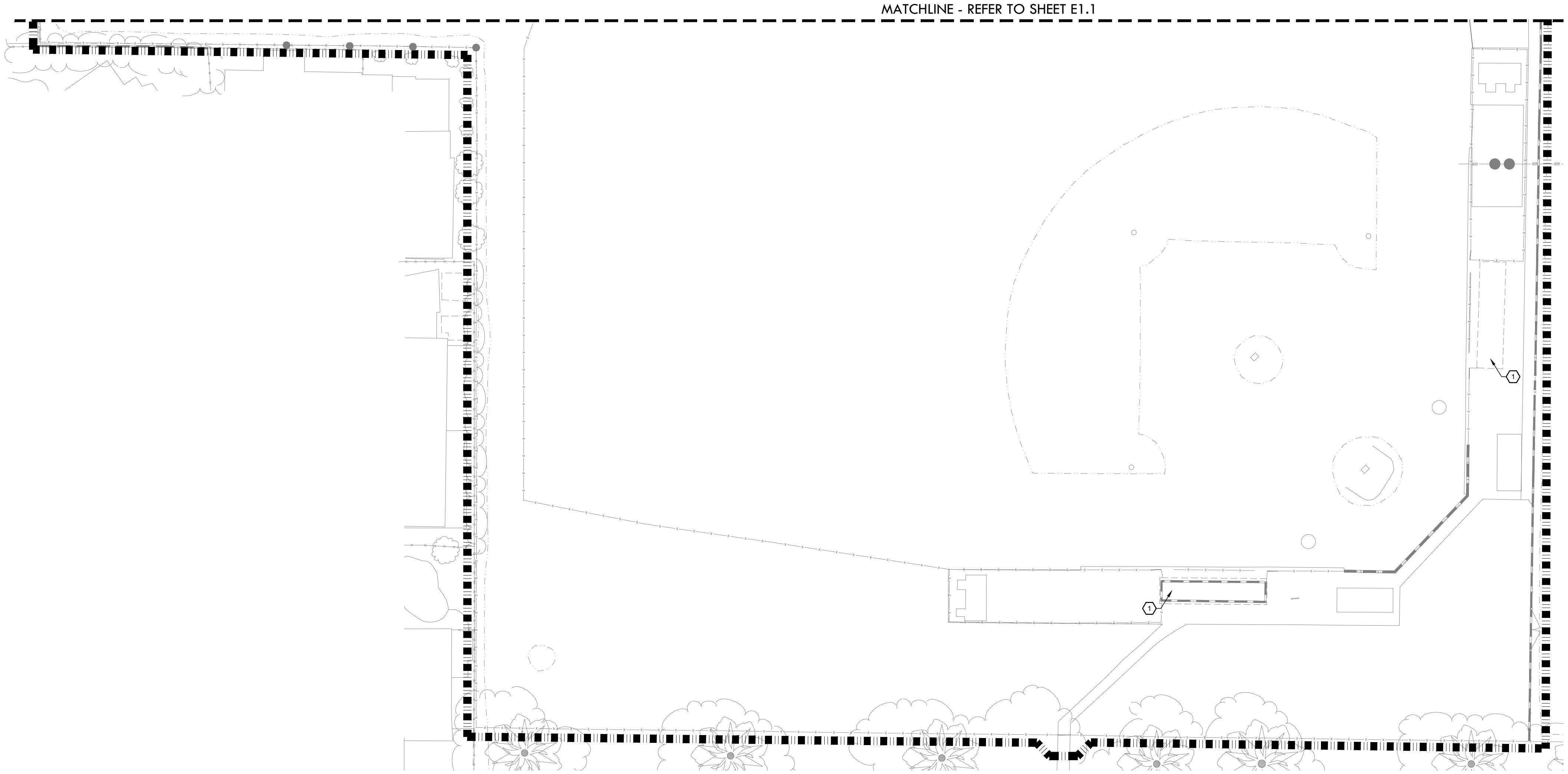

ELECTRICAL PARTIAL SITE PLAN

SCALE : 1" = 20'-0"

1
E1.2

N

IDENTIFICATION STAMP
DIV. OF THE STATE ARCHITECT
APP: 02-123587 INC:
REVIEWED FOR
SS ☑ FLS ☑ ACS ☑
DATE: 01/16/2026

VERDE DESIGN
LANDSCAPE ARCHITECTURE
CIVIL ENGINEERING
SPORT PLANNING & DESIGN
1843 Iron Point Rd. Suite 140
Folsom, CA 95630
tel: 916.415.6554
fax: 916.415.6525
www.VerdeDesignInc.com

STAMP

No. E 23927
3-31-2026
12/08/2025
Date Signed:

CONSULTANT

capital engineering
RANCHO CORDOVA, CALIFORNIA

NH - RK/NO	240739.00
PM - DESIGN TEAM	PROJECT NO.

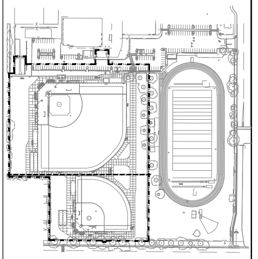

SHEET TITLE
ELECTRICAL DEMO
PARTIAL SITE PLAN 2

PROJECT NAME
LODI HIGH SCHOOL
ATHLETIC FIELD
IMPROVEMENTS

PROJECT ADDRESS
3 S PACIFIC AVE
LODI, CA
95242

SUBMITTAL	DATE
50% DSA SUBMITTAL	07/31/25
100% DSA SUBMITTAL	09/25/25
DSA BACKCHECK SUBMITTAL	12/17/25
DSA BACKCHECK SUBMITTAL	01/08/26

NO.	REVISIONS	DATE
△		
△		
△		
△		
△		
△		

DRAWN BY RK	CHECKED BY NH
DATE ISSUED 01/08/2026	SCALE 1" = 20'-0"

PROJ. NO.
2502700

SHEET NO.
E1.2

ELECTRICAL DEMO PARTIAL SITE PLAN 2

ALL IDEAS, DESIGNS, ARRANGEMENTS, AND PLANS INDICATED OR REPRESENTED BY THIS DRAWING ARE OWNED BY AND THE PROPERTY OF VERDE DESIGN, INC. AND WERE CREATED, EVOLVED, AND DEVELOPED FOR USE ON AND IN CONNECTION WITH THE SPECIFIED PROJECT. NONE OF SUCH IDEAS, DESIGNS, ARRANGEMENTS OR PLANS SHALL BE USED, REPRODUCED, OR PUBLISHED BY ANY METHOD, IN WHOLE OR IN PART, OR DISCLOSED TO ANY PERSON, FIRM, OR CORPORATION FOR ANY PURPOSE WHATSOEVER WITHOUT WRITTEN PERMISSION OF VERDE DESIGN, INC.

DRAWING NAME: \\capsac.lan\network\Project_Docs\2024\240739.00\1200 Drawings\1205 AutoCAD Project Files\E1.1-E1.2 DEMO SITE PLAN.dwg
PLOT DATE: 12-04-25 PLOTTED BY: Rustem.Kopbayev

ALL IDEAS, DESIGNS, ARRANGEMENTS, AND PLANS INDICATED OR REPRESENTED BY THIS DRAWING ARE OWNED BY AND THE PROPERTY OF VERDE DESIGN, INC. AND WERE CREATED, EVOLVED, AND DEVELOPED FOR USE ON AND IN CONNECTION WITH THE SPECIFIED PROJECT. NONE OF SUCH IDEAS, DESIGNS, ARRANGEMENTS OR PLANS SHALL BE USED, REPRODUCED, OR PUBLISHED BY ANY METHOD, IN WHOLE OR IN PART, OR DISCLOSED TO ANY PERSON, FIRM, OR CORPORATION FOR ANY PURPOSE WHATSOEVER WITHOUT WRITTEN PERMISSION OF VERDE DESIGN, INC.

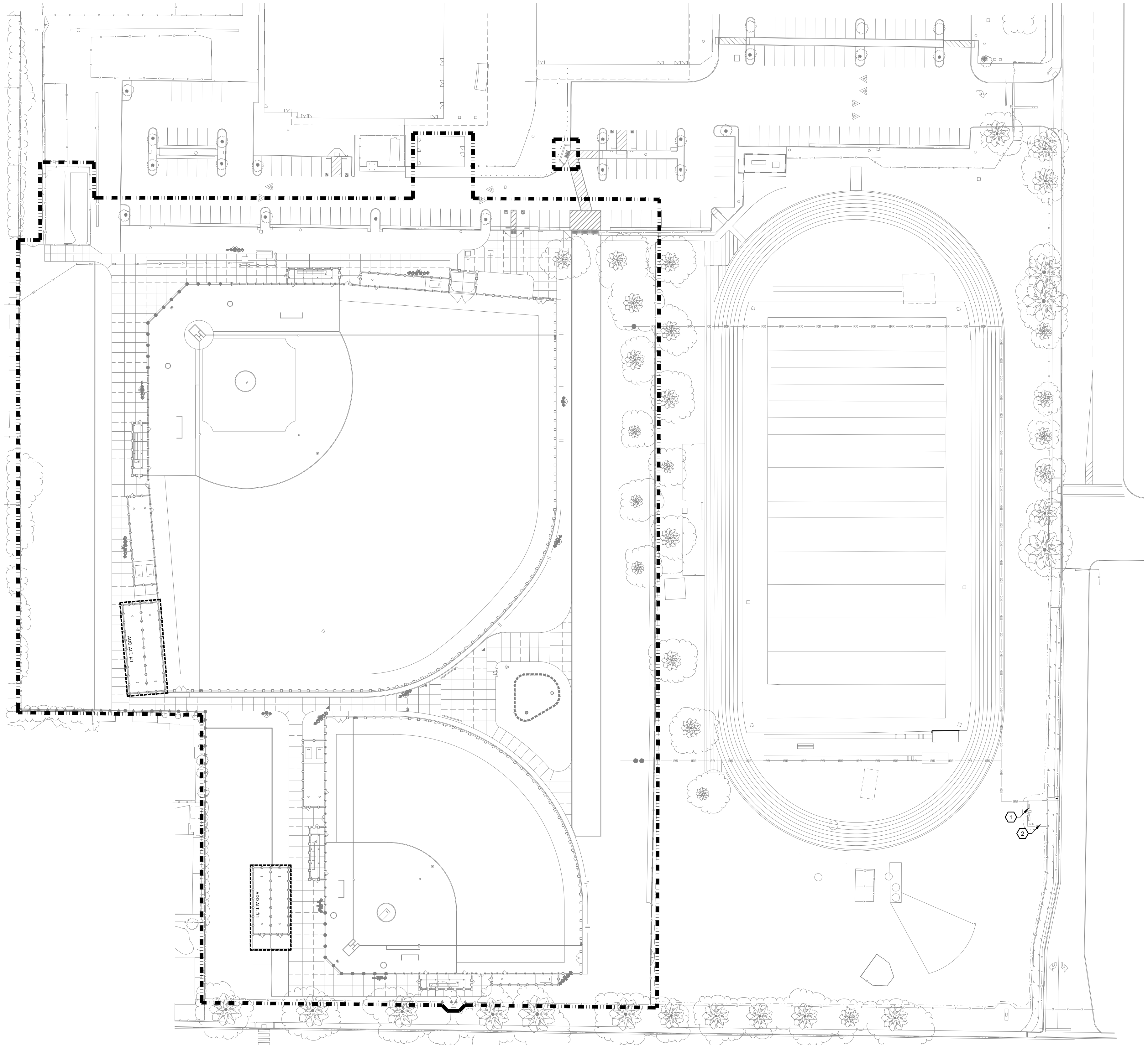

ELECTRICAL OVERALL SITE PLAN

SCALE : 1" = 40'-0"

1
E2.0

KEY NOTES:

1. EXISTING ELECTRICAL SERVICE.
2. TRENCH AND ROUTE 2#12, #12G - 1" PVC SCH40 CONDUCTORS AND CONDUIT UNDERGROUND FROM EXISTING ELECTRICAL SERVICE TO POWER NEW IRRIGATION CONTROLLER.

IDENTIFICATION STAMP
DIV. OF THE STATE ARCHITECT
APP: 02-123587 INC:
REVIEWED FOR
SS ☑ FLS ☑ ACS ☑
DATE: 01/16/2026

VERDE DESIGN
LANDSCAPE ARCHITECTURE
CIVIL ENGINEERING
SPORT PLANNING & DESIGN
1843 Iron Point Rd. Suite 140
Folsom, CA 95630
tel: 916.415.6554
fax: 916.415.6525
www.VerdeDesignInc.com

STAMP

NATHAN A. HEARN
No. E 23927
3-31-2026

Nathan A. Hearn

Date Signed: 12/08/2025

CONSULTANT

capital
engineering
RANCHO CORDOVA, CALIFORNIA

NH - RK/NO 240739.00
PM - DESIGN TEAM PROJECT NO.

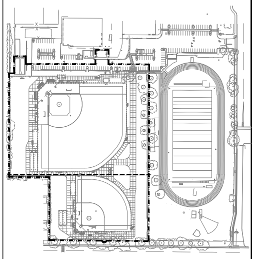

SHEET TITLE
ELECTRICAL OVERALL
SITE PLAN

PROJECT NAME
LODI HIGH SCHOOL
ATHLETIC FIELD
IMPROVEMENTS

PROJECT ADDRESS
3 S PACIFIC AVE
LODI, CA
95242

SUBMITTAL	DATE
50% DSA SUBMITTAL	07/31/25
100% DSA SUBMITTAL	09/25/25
DSA BACKCHECK SUBMITTAL	12/17/25
DSA BACKCHECK SUBMITTAL	01/08/26

NO.	REVISIONS	DATE
△		
△		
△		
△		
△		
△		

DRAWN BY
RK

CHECKED BY
NH

DATE ISSUED
01/08/2026

SCALE
1" = 40'-0"

PROJ. NO.
2502700

SHEET NO.
E2.0

DRAWING NAME: \\capsac.lan\network\Project_Docs\2024\240739.00\1200 Drawings\1205 AutoCAD Project Files\E2.0-E2.3 ELECTRICAL SITE PLAN.dwg
PLOT DATE: 12-04-25 PLOTTED BY: Rustem.Kopbayev

ALL IDEAS, DESIGNS, ARRANGEMENTS, AND PLANS INDICATED OR REPRESENTED BY THIS DRAWING ARE OWNED BY AND THE PROPERTY OF VERDE DESIGN, INC. AND WERE CREATED, EVOLVED, AND DEVELOPED FOR USE ON AND IN CONNECTION WITH THE SPECIFIED PROJECT. NONE OF SUCH IDEAS, DESIGNS, ARRANGEMENTS OR PLANS SHALL BE USED, REPRODUCED, OR PUBLISHED BY ANY METHOD, IN WHOLE OR IN PART, OR DISCLOSED TO ANY PERSON, FIRM, OR CORPORATION FOR ANY PURPOSE WHATSOEVER WITHOUT WRITTEN PERMISSION OF VERDE DESIGN, INC.

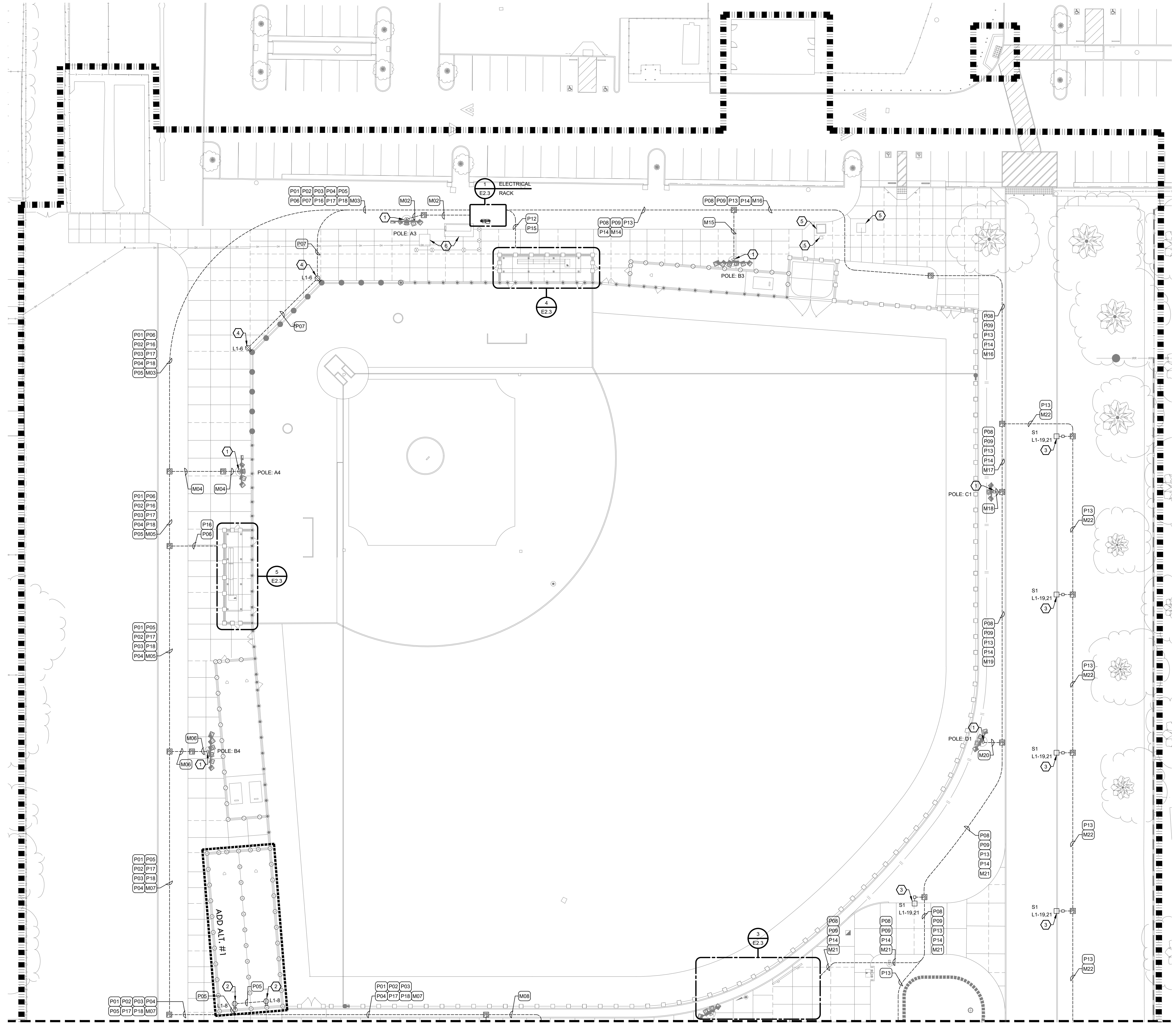
P01 P02 P03 P04 P05
P06 P07 P16 P17 P18 M03
M02
M02
1
E2.3
ELECTRICAL RACK
1
P12
P15
POLE: A3
6
P07
4
L1-6
4
E2.3
P08 P09 P13 P14 M16
P08 P09 P13
P14 M14
M15
1
POLE: B3
5
5
5
P07
4
L1-6
P01 P06
P02 P16
P03 P17
P04 P18
P05 M03
P08
P09
P13
P14
M16
P13
M22
S1
L1-19,21
3
P08
P09
P13
P14
M17
1
POLE: A4
M04
M04
1
POLE: C1
M18
P01 P06
P02 P16
P03 P17
P04 P18
P05 M05
P16
P08
5
E2.3
P13
M22
S1
L1-19,21
3
P01 P05
P02 P17
P03 P18
P04 M05
P08
P09
P13
P14
M19
P13
M22
M06
POLE: B4
M06
1
1
POLE: D1
M20
S1
L1-19,21
3
P13
M22
P08
P09
P13
P14
M21
P01 P05
P02 P17
P03 P18
P04 M07
ADD ALT. #1
3
S1
L1-19,21
P08
P09
P14
M21
P08
P09
P14
M21
P08
P09
P13
P14
M21
S1
L1-19,21
3
3
E2.3
P13
M22
P13
P01 P02 P03 P04
P05 P17 P18 M07
P05
2
L1-8
P05
2
L1-8
P01 P02 P03
P04 P17 P18 M07
M08
MATCHLINE - REFER TO SHEET E2.2

ELECTRICAL PARTIAL SITE PLAN

SCALE : 1" = 20'-0"

1
E2.1

N

KEY NOTES:

1. PROVIDE CONNECTION TO SPORTS LIGHTING PROVIDED BY OTHERS.
2. PROVIDE AND INSTALL WEATHERPROOF, GFCI, EXTERIOR OUTLET FOR BATTING CAGES. OUTLET SHALL BE PROVIDED WITH RAIN-TIGHT "WHILE-IN-USE" LOCKABLE COVER PER C.E.C REQUIREMENTS. OUTLET SHALL BE INSTALLED ON FENCE POST. CONTRACTOR SHALL COORDINATE EXACT LOCATION WITH ARCHITECT.
3. PROVIDE CONNECTION TO SITE LIGHTING.
4. PROVIDE AND INSTALL WEATHERPROOF, GFCI, EXTERIOR OUTLET FOR BACKSTOP. OUTLET SHALL BE PROVIDED WITH RAIN-TIGHT "WHILE-IN-USE" LOCKABLE COVER PER C.E.C REQUIREMENTS. OUTLET SHALL BE INSTALLED ON FENCE POST. CONTRACTOR SHALL COORDINATE EXACT LOCATION WITH ARCHITECT.
5. EXISTING PULL BOXES, VAULTS, AND LIDS TO REMAIN. ADJUST ELEVATION SO LID IS FLUSH WITH ADJACENT SIDEWALK.
6. EXISTING MAIN SWITCHBOARD AND TRANSFORMER TO REMAIN.

SHEET NOTES:

1. LIGHT FIXTURE, CIRCUIT, AND PANEL SCHEDULES CAN BE FOUND ON SHEET E0.2

IDENTIFICATION STAMP
DIV. OF THE STATE ARCHITECT
APP: 02-123587 INC:
REVIEWED FOR
SS ☑ FLS ☑ ACS ☑
DATE: 01/16/2026

VERDE DESIGN
LANDSCAPE ARCHITECTURE
CIVIL ENGINEERING
SPORT PLANNING & DESIGN
1843 Iron Point Rd. Suite 140
Folsom, CA 95630
tel: 916.415.6554
fax: 916.415.6525
www.VerdeDesignInc.com

STAMP

NATHAN A. HEARN
No. E 23927
3-31-2026
ELECTRICAL
Date Signed: 12/08/2025

CONSULTANT

capital engineering
RANCHO CORDOVA, CALIFORNIA

NH - RK/NO	240739.00
PM - DESIGN TEAM	PROJECT NO.

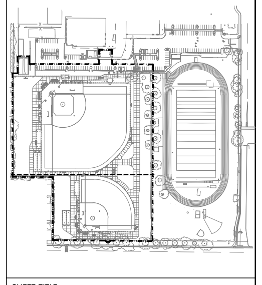

SHEET TITLE
ELECTRICAL PARTIAL
SITE PLAN 1

PROJECT NAME
LODI HIGH SCHOOL
ATHLETIC FIELD
IMPROVEMENTS

PROJECT ADDRESS
3 S PACIFIC AVE
LODI, CA
95242

SUBMITTAL	DATE
50% DSA SUBMITTAL	07/31/25
100% DSA SUBMITTAL	09/25/25
DSA BACKCHECK SUBMITTAL	12/17/25
DSA BACKCHECK SUBMITTAL	01/08/26

NO.	REVISIONS	DATE
△		
△		
△		
△		
△		
△		

DRAWN BY	CHECKED BY
RK	NH
DATE ISSUED 01/08/2026	SCALE 1" = 20'-0"

PROJ. NO.
2502700

SHEET NO.
E2.1

ELECTRICAL PARTIAL SITE PLAN 1

DRAWING NAME: \\capsac.lan\network\Project_Docs\2024\240739.00\1200 Drawings\1205 AutoCAD Project Files\E2.0-E2.3 ELECTRICAL SITE PLAN.dwg
PLOT DATE: 12-04-25 PLOTTED BY: Rustem.Kopbayev

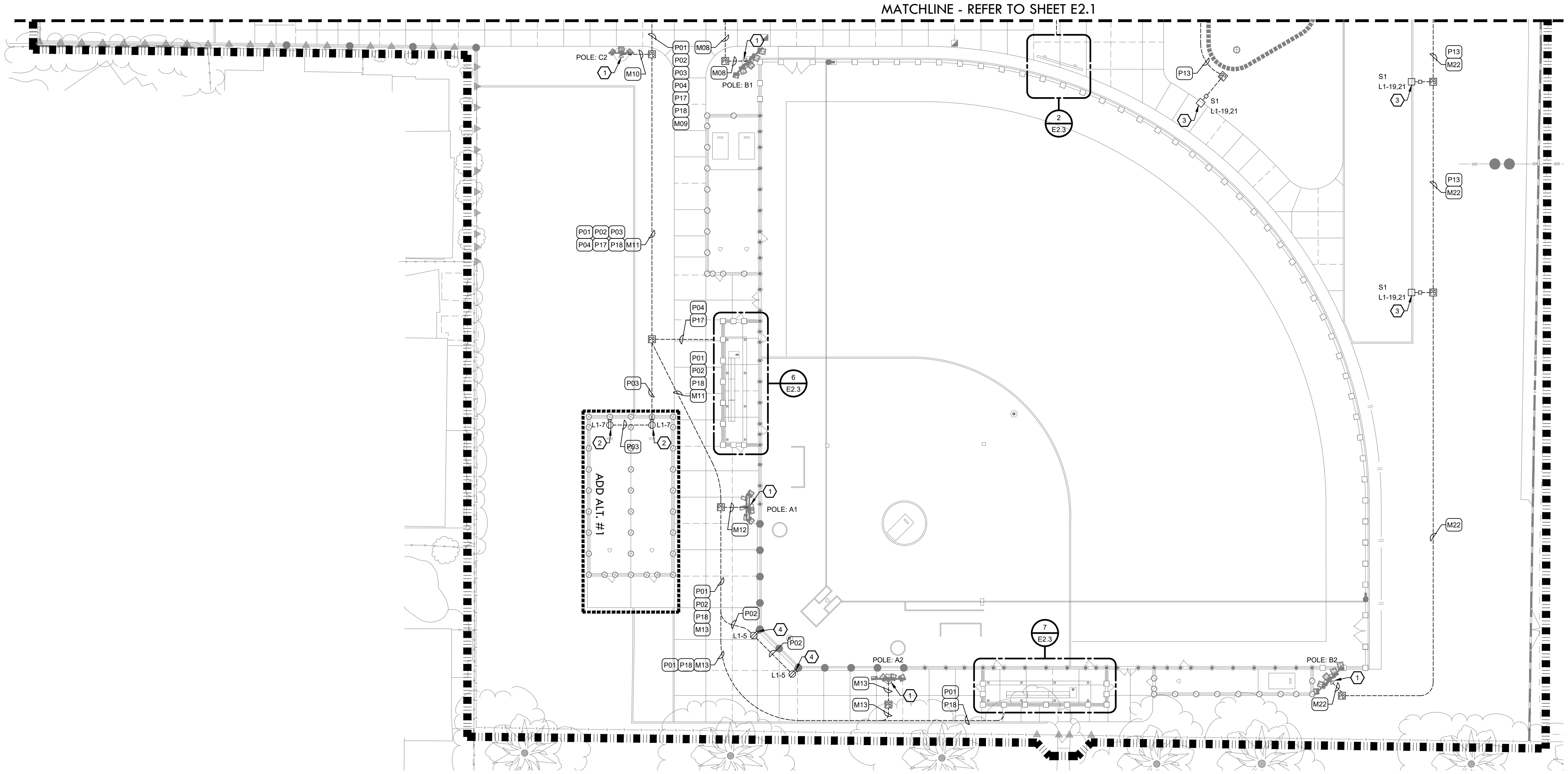
MATCHLINE - REFER TO SHEET E2.1
POLE: C2
1
M10
P01
P02
P03
P04
P17
P18
M09
M08
M08
POLE: B1
1
2
E2.3
P13
S1
L1-19,21
3
S1
L1-19,21
3
P13
M22
P13
M22
P01 P02 P03
P04 P17 P18 M11
P04
P17
P01
P02
P18
M11
6
E2.3
P03
L1-7
L1-7
2
2
P03
ADD ALT. #1
1
POLE: A1
M12
M22
P01
P02
P18
M13
P02
4
L1-5
P02
4
L1-5
P01 P18 M13
7
E2.3
POLE: A2
M13
M13
1
P01
P18
POLE: B2
1
M22

ELECTRICAL PARTIAL SITE PLAN

1
E2.2

SCALE : 1" = 20'-0"

N

KEY NOTES:

1. PROVIDE CONNECTION TO SPORTS LIGHTING PROVIDED BY OTHERS.
2. PROVIDE AND INSTALL WEATHERPROOF, GFCI, EXTERIOR OUTLET FOR BATTING CAGES. OUTLET SHALL BE PROVIDED WITH RAIN-TIGHT "WHILE-IN-USE" LOCKABLE COVER PER C.E.C REQUIREMENTS. OUTLET SHALL BE INSTALLED ON FENCE POST. CONTRACTOR SHALL COORDINATE EXACT LOCATION WITH ARCHITECT.
3. PROVIDE CONNECTION TO SITE LIGHTING.
4. PROVIDE AND INSTALL WEATHERPROOF, GFCI, EXTERIOR OUTLET FOR BACKSTOP. OUTLET SHALL BE PROVIDED WITH RAIN-TIGHT "WHILE-IN-USE" LOCKABLE COVER PER C.E.C REQUIREMENTS. OUTLET SHALL BE INSTALLED ON FENCE POST. CONTRACTOR SHALL COORDINATE EXACT LOCATION WITH ARCHITECT.

SHEET NOTES:

1. LIGHT FIXTURE, CIRCUIT, AND PANEL SCHEDULES CAN BE FOUND ON SHEET E0.2

IDENTIFICATION STAMP
DIV. OF THE STATE ARCHITECT
APP: 02-123587 INC:
REVIEWED FOR
SS ☑ FLS ☑ ACS ☑
DATE: 01/16/2026

VERDE DESIGN
LANDSCAPE ARCHITECTURE
CIVIL ENGINEERING
SPORT PLANNING & DESIGN
1843 Iron Point Rd. Suite 140
Folsom, CA 95630
tel: 916.415.6554
fax: 916.415.6525
www.VerdeDesignInc.com

STAMP

NATHAN A. HEARN
No. E 23927
3-31-2026
Nathan A. Hearn
Date Signed: 12/08/2025

CONSULTANT

capital engineering
RANCHO CORDOVA, CALIFORNIA

NH - RK/NO	240739.00
PM - DESIGN TEAM	PROJECT NO.

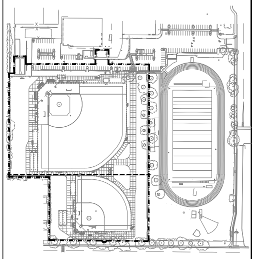

SHEET TITLE
ELECTRICAL PARTIAL
SITE PLAN 2

PROJECT NAME
LODI HIGH SCHOOL
ATHLETIC FIELD
IMPROVEMENTS

PROJECT ADDRESS
3 S PACIFIC AVE
LODI, CA
95242

SUBMITTAL	DATE
50% DSA SUBMITTAL	07/31/25
100% DSA SUBMITTAL	09/25/25
DSA BACKCHECK SUBMITTAL	12/17/25
DSA BACKCHECK SUBMITTAL	01/08/26

NO.	REVISIONS	DATE
△		
△		
△		
△		
△		
△		

DRAWN BY	CHECKED BY
RK	NH
DATE ISSUED 01/08/2026	SCALE 1" = 20'-0"

PROJ. NO.
2502700

SHEET NO.
E2.2

ELECTRICAL PARTIAL SITE PLAN 2

ALL IDEAS, DESIGNS, ARRANGEMENTS, AND PLANS INDICATED OR REPRESENTED BY THIS DRAWING ARE OWNED BY AND THE PROPERTY OF VERDE DESIGN, INC. AND WERE CREATED, EVOLVED, AND DEVELOPED FOR USE ON AND IN CONNECTION WITH THE SPECIFIED PROJECT. NONE OF SUCH IDEAS, DESIGNS, ARRANGEMENTS OR PLANS SHALL BE USED, REPRODUCED, OR PUBLISHED BY ANY METHOD, IN WHOLE OR IN PART, OR DISCLOSED TO ANY PERSON, FIRM, OR CORPORATION FOR ANY PURPOSE WHATSOEVER WITHOUT WRITTEN PERMISSION OF VERDE DESIGN, INC.

DRAWING NAME: \\capsac.lan\network\Project_Docs\2024\240739.00\1200 Drawings\1205 AutoCAD Project Files\E2.0-E2.3 ELECTRICAL SITE PLAN.dwg
PLOT DATE: 12-04-25 PLOTTED BY: Rustem.Kopbayev

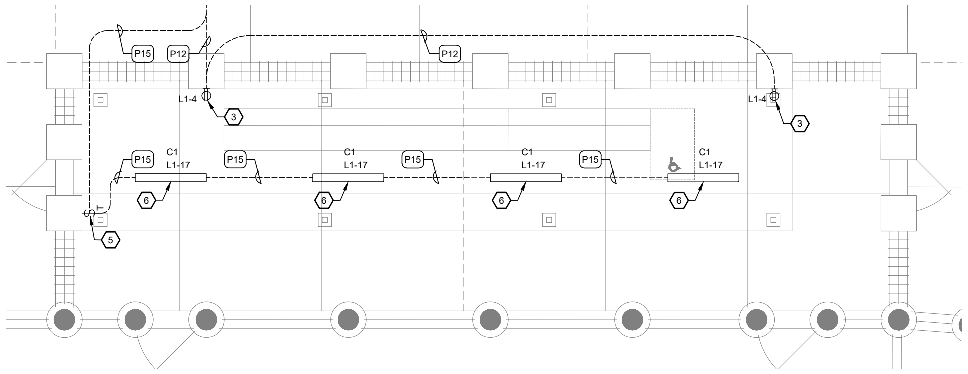
P15
P12
P12
L1-4
3
L1-4
3
P15
C1
L1-17
P15
C1
L1-17
P15
C1
L1-17
P15
C1
L1-17
6
6
6
6
5

ENLARGED THIRD BASE DUGOUT (BASEBALL) 4 E2.3

SCALE : 1/4" = 1'-0"

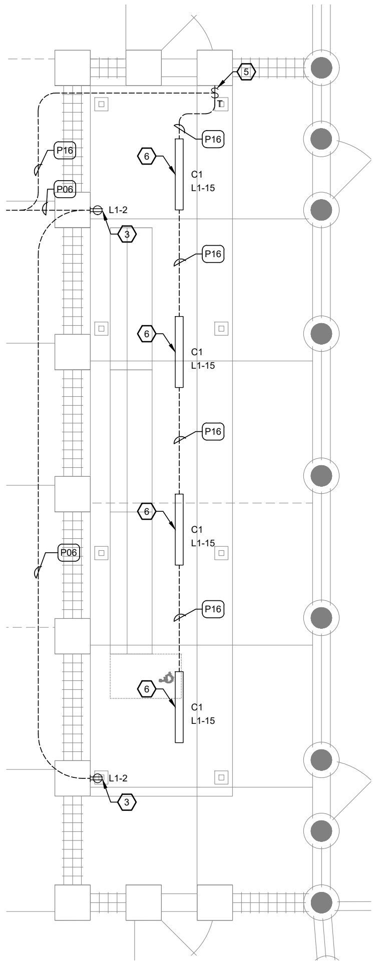
5
P16
P06
L1-2
3
6
P16
C1
L1-15
P16
6
C1
L1-15
P16
6
C1
L1-15
P06
P16
6
C1
L1-15
L1-2
3

ENLARGED FIRST BASE DUGOUT (BASEBALL) 5 E2.3

SCALE : 1/4" = 1'-0"

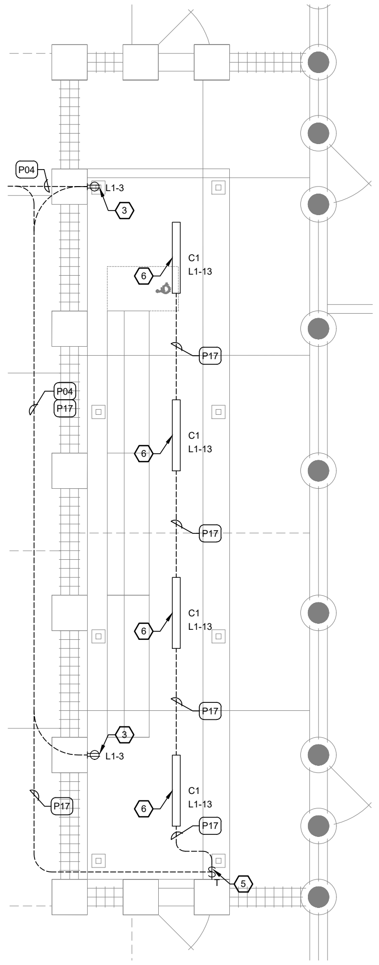
P04
L1-3
3
6
C1
L1-13
P17
P04
P17
6
C1
L1-13
P17
6
C1
L1-13
P17
3
L1-3
P17
6
C1
L1-13
P17
5

ENLARGED THIRD BASE DUGOUT (SOFTBALL) 6 E2.3

SCALE : 1/4" = 1'-0"

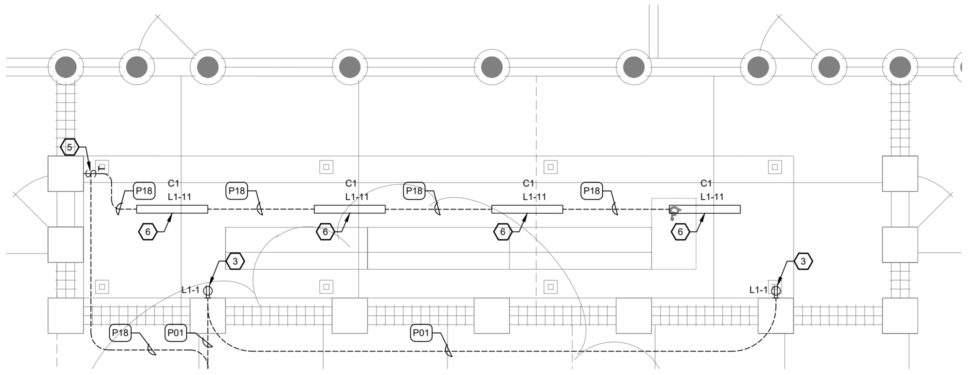
5
P18
C1
L1-11
P18
C1
L1-11
P18
C1
L1-11
P18
C1
L1-11
6
6
6
6
3
L1-1
3
L1-1
P18
P01
P01

ENLARGED FIRST BASE DUGOUT (SOFTBALL) 7 E2.3

SCALE : 1/4" = 1'-0"

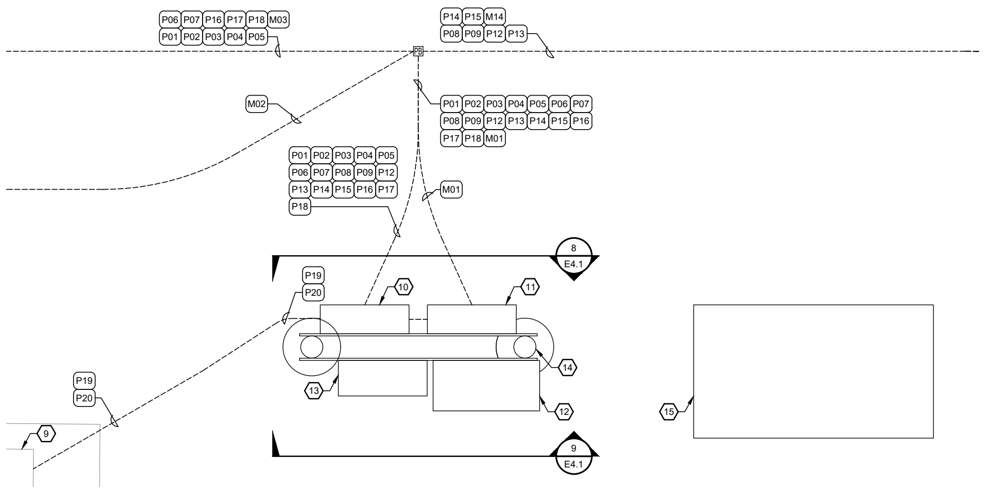
P06 P07 P16 P17 P18 M03
P01 P02 P03 P04 P05
P14 P15 M14
P08 P09 P12 P13
M02
P01 P02 P03 P04 P05 P06 P07
P08 P09 P12 P13 P14 P15 P16
P17 P18 M01
P01 P02 P03 P04 P05
P06 P07 P08 P09 P12
P13 P14 P15 P16 P17
P18
M01
8
E4.1
P19
P20
10
11
14
13
12
9
E4.1
15
P19
P20
9

ENLARGED ELECTRICAL RACK STRUCTURE 1 E2.3

SCALE : 3/4" = 1'-0"

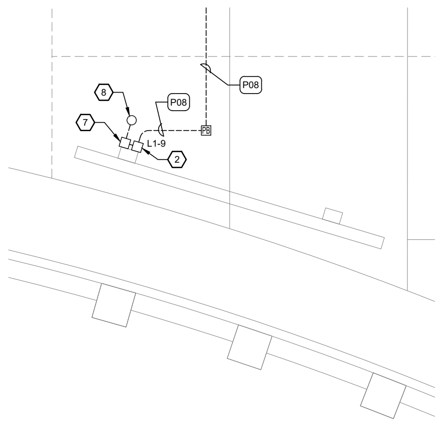
P08
8
P08
7
L1-9
2

ENLARGED SCORE BOARD (SOFTBALL) 2 E2.3

SCALE : 1/4" = 1'-0"

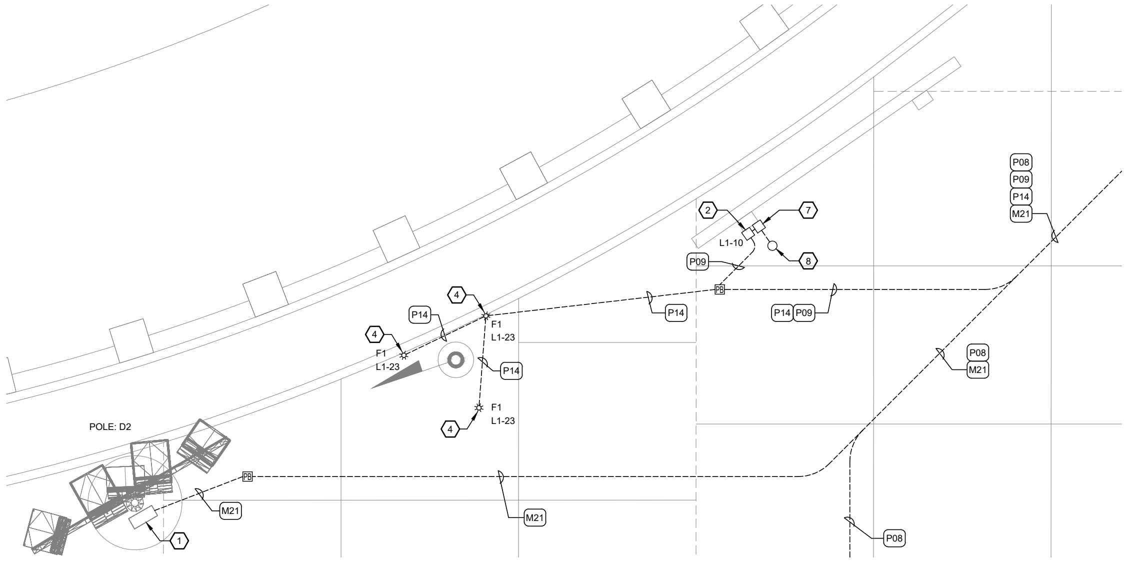
P08
P09
P14
M21
2
7
L1-10
P09
8
P14
P14 P09
4
F1
L1-23
P14
4
F1
L1-23
P14
F1
L1-23
4
POLE: D2
P08
M21
1
M21
M21
P08

ENLARGED SCORE BOARD (BASEBALL) 3 E2.3

SCALE : 1/4" = 1'-0"

KEY NOTES:

1. PROVIDE CONNECTION TO SPORTS LIGHTING PROVIDED BY OTHERS.
2. PROVIDE WEATHERPROOF RECEIVER BOX. ROUTE CONDUIT UP THE SURFACE OF SCOREBOARD SUPPORT BEAM INTO RECEIVER BOX. MOUNT RECEIVER BOX WITH THE TOP OF THE BOX AT 6'-7" ABOVE GRADE. RECEIVER BOX TO FACE SPORTS FIELD AND TO BE WITHIN LINE OF SIGHT OF THE CONTROLLER. REF 5/E4.1.
3. PROVIDE AND INSTALL WEATHERPROOF, GFCI, EXTERIOR OUTLET FOR DUGOUT. OUTLET SHALL BE PROVIDED WITH RAIN-TIGHT "WHILE-IN-USE" LOCKABLE COVER PER C.E.C REQUIREMENTS. OUTLET SHALL BE INSTALLED ON FENCE POST. CONTRACTOR SHALL COORDINATE EXACT LOCATION WITH ARCHITECT.
4. PROVIDE CONNECTION TO IN-GROUND FLAG LIGHTING
5. PROVIDE (N) TIMER SWITCH IN NEMA-3R, LOCKABLE, SIDE HINGE B-LINE SERIES GASKET BOX. TIMER SHALL BE WATTSTOPPER "TS-400" TIME SWITCH. CONTRACTOR SHALL PROVIDE ALL REQUIRED ACCESSORIES, CONDUIT, CABLES, ETC. FOR COMPLETE INSTALLATION.
6. PROVIDE CONNECTION TO DUGOUT LIGHT FIXTURES.
7. PROVIDE WEATHERPROOF TOGGLE SWITCH, DISCONNECT PER CEC 600.6. MOUNT SWITCH WITH THE TOP OF THE BOX AT 6'-7" ABOVE GRADE
8. GROUND ROD BOX. SEE DETAIL 3/E4.1.
9. EXISTING MAIN SWITCHBOARD.
10. PANEL L1
11. PANEL SL1
12. MUSCO CONTROL AND MONITORING CABINET
13. NEMA 3R ENCLOSURE WITH TIME CLOCK INSIDE AND MUSCO AUXILIARY LIGHTING CABINET UNDERNEATH.
14. RACK STRUCTURE. SEE DETAILS 8 AND 9 ON SHEET E4.1
15. PAD-MOUNTED INVERTER. SEE DETAIL 6 ON SHEET E4.1.

SHEET NOTES:

1. LIGHT FIXTURE, CIRCUIT, AND PANEL SCHEDULES CAN BE FOUND ON SHEET E0.2

IDENTIFICATION STAMP
DIV. OF THE STATE ARCHITECT
APP: 02-123587 INC:
REVIEWED FOR
SS ☑ FLS ☑ ACS ☑
DATE: 01/16/2026

VERDE DESIGN
LANDSCAPE ARCHITECTURE
CIVIL ENGINEERING
SPORT PLANNING & DESIGN
1843 Iron Point Rd. Suite 140
Folsom, CA 95630
tel: 916.415.6554
fax: 916.415.6525
www.VerdeDesignInc.com

STAMP

NATHAN A. HEARN
No. E 23927
3-31-2026
Date Signed: 12/08/2025

CONSULTANT

capital engineering
RANCHO CORDOVA, CALIFORNIA

NH - RK/NO 240739.00
PM - DESIGN TEAM PROJECT NO.

SHEET TITLE
ELECTRICAL
ENLARGED PLANS

PROJECT NAME
LODI HIGH SCHOOL
ATHLETIC FIELD
IMPROVEMENTS

PROJECT ADDRESS
3 S PACIFIC AVE
LODI, CA
95242

SUBMITTAL	DATE
50% DSA SUBMITTAL	07/31/25
100% DSA SUBMITTAL	09/25/25
DSA BACKCHECK SUBMITTAL	12/17/25
DSA BACKCHECK SUBMITTAL	01/08/26

NO.	REVISIONS	DATE
△		
△		
△		
△		
△		
△		

DRAWN BY: RK
CHECKED BY: NH
DATE ISSUED: 01/08/2026
SCALE: AS SHOWN
PROJ. NO.: 2502700
SHEET NO.: E2.3

ELECTRICAL ENLARGED PLANS

ALL IDEAS, DESIGNS, ARRANGEMENTS, AND PLANS INDICATED OR REPRESENTED BY THIS DRAWING ARE OWNED BY AND THE PROPERTY OF VERDE DESIGN, INC. AND WERE CREATED, EVOLVED, AND DEVELOPED FOR USE ON AND IN CONNECTION WITH THE SPECIFIED PROJECT. NONE OF SUCH IDEAS, DESIGNS, ARRANGEMENTS OR PLANS SHALL BE USED, REPRODUCED, OR PUBLISHED BY ANY METHOD, IN WHOLE OR IN PART, OR DISCLOSED TO ANY PERSON, FIRM, OR CORPORATION FOR ANY PURPOSE WHATSOEVER WITHOUT WRITTEN PERMISSION OF VERDE DESIGN, INC.

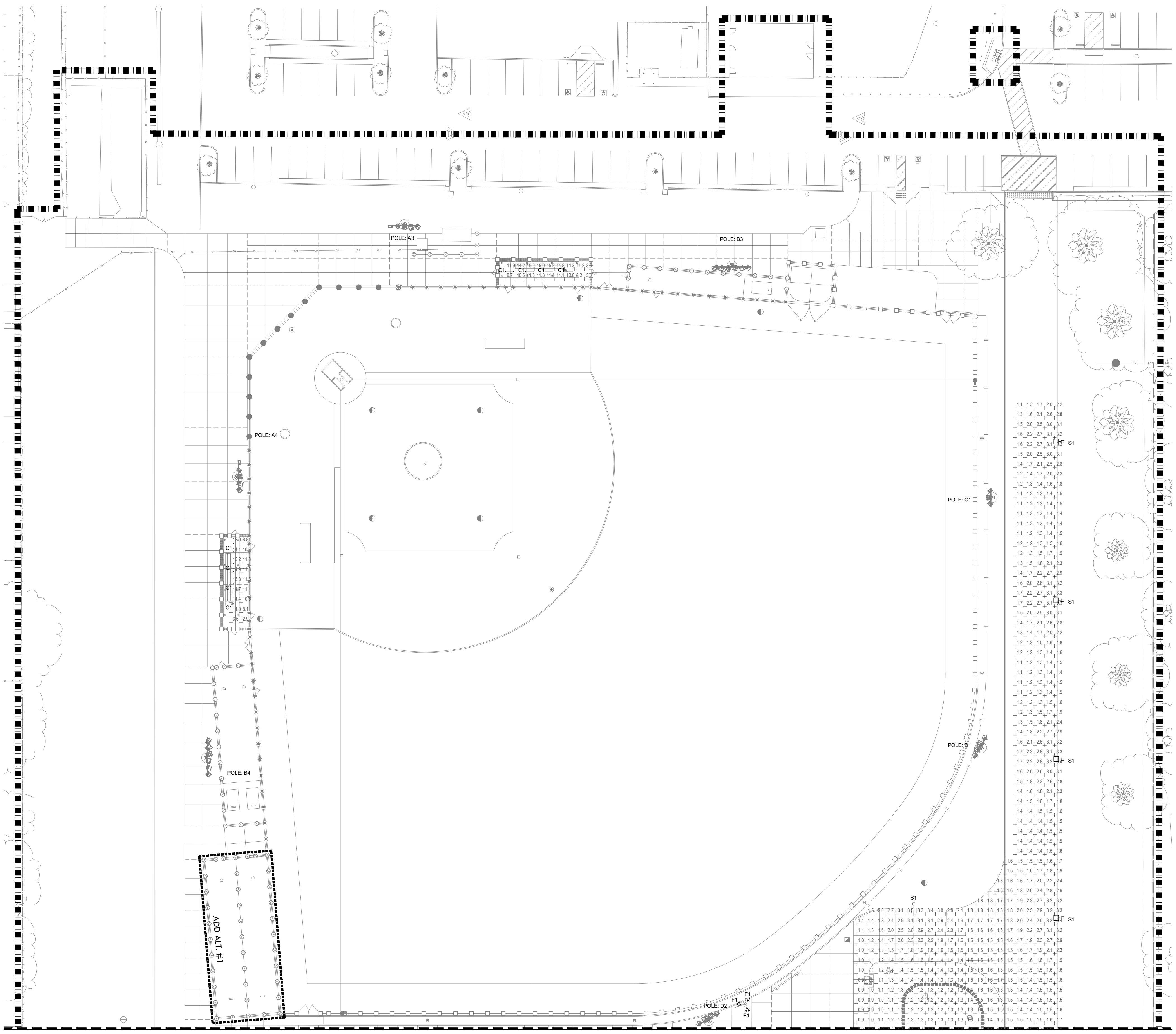

MATCHLINE - REFER TO SHEET E3.2

PHOTOMETRIC PARTIAL SITE PLAN

SCALE : 1" = 20'-0"

1
E3.1

N

SHEET NOTES:

1. REFER TO SHEET E0.2 FOR LIGHTING FIXTURE SCHEDULE
2. REFER TO EGRESS BLANKET GRID ON MUSCO DRAWING ON SHEET E5.3 FOR ILLUMINATION ALONG THE MEANS OF EGRESS.

IDENTIFICATION STAMP
DIV. OF THE STATE ARCHITECT
APP: 02-123587 INC:
REVIEWED FOR
SS ☑ FLS ☑ ACS ☑
DATE: 01/16/2026

VERDE DESIGN
LANDSCAPE ARCHITECTURE
CIVIL ENGINEERING
SPORT PLANNING & DESIGN
1843 Iron Point Rd. Suite 140
Folsom, CA 95630
tel: 916.415.6554
fax: 916.415.6525
www.VerdeDesignInc.com

STAMP

NATHAN A. HEARN
No. E 23927
3-31-2026

Date Signed: 12/08/2025

CONSULTANT

capital engineering
Rancho Cordova, California

NH - RK/NO	240739.00
PM - DESIGN TEAM	PROJECT NO.

SHEET TITLE

PHOTOMETRIC PARTIAL
SITE PLAN 1

PROJECT NAME

LODI HIGH SCHOOL
ATHLETIC FIELD
IMPROVEMENTS

PROJECT ADDRESS

3 S PACIFIC AVE
LODI, CA
95242

SUBMITTAL	DATE
50% DSA SUBMITTAL	07/31/25
100% DSA SUBMITTAL	09/25/25
DSA BACKCHECK SUBMITTAL	12/17/25
DSA BACKCHECK SUBMITTAL	01/08/26

NO.	REVISIONS	DATE
△		
△		
△		
△		
△		
△		

DRAWN BY RK	CHECKED BY NH
DATE ISSUED 01/08/2026	SCALE 1" = 20'-0"
PROJ. NO. 2502700	
SHEET NO. E3.1	

PHOTOMETRIC PARTIAL SITE PLAN 1

ALL IDEAS, DESIGNS, ARRANGEMENTS, AND PLANS INDICATED OR REPRESENTED BY THIS DRAWING ARE OWNED BY AND THE PROPERTY OF VERDE DESIGN, INC. AND WERE CREATED, EVOLVED, AND DEVELOPED FOR USE ON AND IN CONNECTION WITH THE SPECIFIED PROJECT. NONE OF SUCH IDEAS, DESIGNS, ARRANGEMENTS OR PLANS SHALL BE USED, REPRODUCED, OR PUBLISHED BY ANY METHOD, IN WHOLE OR IN PART, OR DISCLOSED TO ANY PERSON, FIRM, OR CORPORATION FOR ANY PURPOSE WHATSOEVER WITHOUT WRITTEN PERMISSION OF VERDE DESIGN, INC.

SHEET NOTES:

1. REFER TO SHEET E0.2 FOR LIGHTING FIXTURE SCHEDULE
2. REFER TO EGRESS BLANKET GRID ON MUSCO DRAWING ON SHEET E5.3 FOR ILLUMINATION ALONG THE MEANS OF EGRESS.

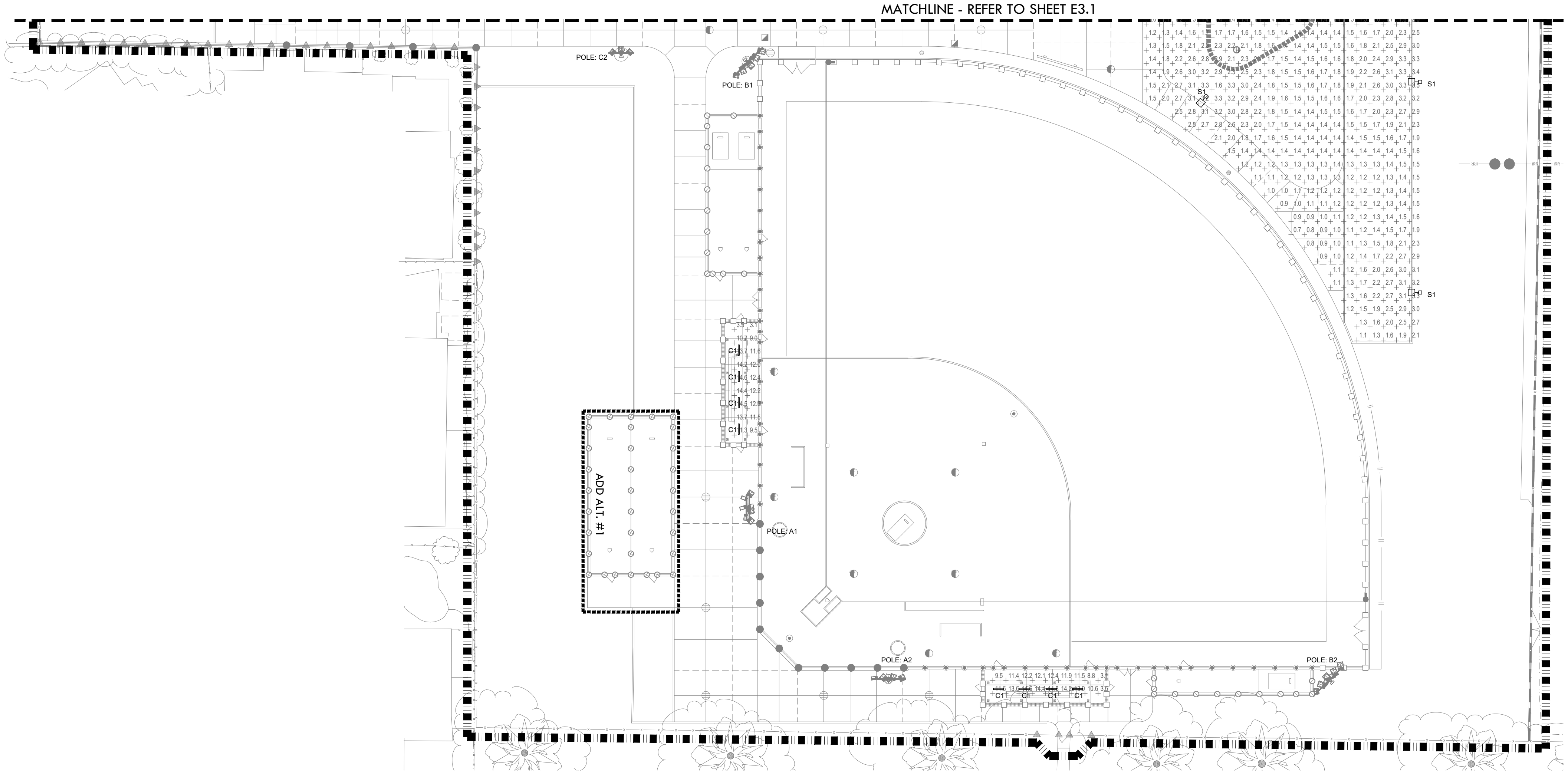

PHOTOMETRIC PARTIAL SITE PLAN

SCALE : 1" = 20'-0"

1
E3.2

N

IDENTIFICATION STAMP
DIV. OF THE STATE ARCHITECT
APP: 02-123587 INC:
REVIEWED FOR
SS ☑ FLS ☑ ACS ☑
DATE: 01/16/2026

VERDE DESIGN
LANDSCAPE ARCHITECTURE
CIVIL ENGINEERING
SPORT PLANNING & DESIGN
1843 Iron Point Rd. Suite 140
Folsom, CA 95630
tel: 916.415.6554
fax: 916.415.6525
www.VerdeDesignInc.com

STAMP

NATHAN A. HEARN
No. E 23927
3-31-2026

Date Signed: 12/08/2025

CONSULTANT

capital engineering
RANCHO CORDOVA, CALIFORNIA

NH - RK/NO	240739.00
PM - DESIGN TEAM	PROJECT NO.

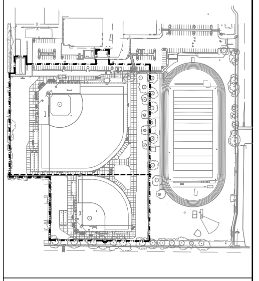

SHEET TITLE
PHOTOMETRIC PARTIAL
SITE PLAN 2

PROJECT NAME
LODI HIGH SCHOOL
ATHLETIC FIELD
IMPROVEMENTS

PROJECT ADDRESS
3 S PACIFIC AVE
LODI, CA
95242

SUBMITTAL	DATE
50% DSA SUBMITTAL	07/31/25
100% DSA SUBMITTAL	09/25/25
DSA BACKCHECK SUBMITTAL	12/17/25
DSA BACKCHECK SUBMITTAL	01/08/26

NO.	REVISIONS	DATE
△		
△		
△		
△		
△		
△		

DRAWN BY	CHECKED BY
RK	NH

DATE ISSUED	SCALE
01/08/2026	1" = 20'-0"

PROJ. NO.
2502700

SHEET NO.
E3.2

PHOTOMETRIC PARTIAL SITE PLAN 2

ALL IDEAS, DESIGNS, ARRANGEMENTS, AND PLANS INDICATED OR REPRESENTED BY THIS DRAWING ARE OWNED BY AND THE PROPERTY OF VERDE DESIGN, INC. AND WERE CREATED, EVOLVED, AND DEVELOPED FOR USE ON AND IN CONNECTION WITH THE SPECIFIED PROJECT. NONE OF SUCH IDEAS, DESIGNS, ARRANGEMENTS OR PLANS SHALL BE USED, REPRODUCED, OR PUBLISHED BY ANY METHOD, IN WHOLE OR IN PART, OR DISCLOSED TO ANY PERSON, FIRM OR CORPORATION FOR ANY PURPOSE WHATSOEVER WITHOUT WRITTEN PERMISSION OF VERDE DESIGN, INC.

DRAWING NAME: \\capsac.lan\network\Project_Docs\2024\240739.00\1200 Drawings\1205 AutoCAD Project Files\E3.1-E3.2 PHOTOMETRIC SITE PLAN.dwg
PLOT DATE: 12-04-25 PLOTTED BY: Rustem.Kopbayev

EQUIPMENT SCHEDULE						
EQUIPMENT	MANUFACTURER	MODEL NAME	LENGTH	WIDTH	HEIGHT	WEIGHT
INVERTER	MYERS	3-CR-7-G-BA2002-BB2005	30"	54"	76"	1693 lbs
208V SL1 PANEL	SCHNEIDER	NQ442L4C + MH50WP	6.5"	20"	50"	115.7 lbs
208V L1 PANEL	SCHNEIDER	NQ442L2C + MH38WP	6.5"	20"	38"	83.62 lbs
MUSCO MONITORING CABINET	MUSCO	N/A	11.38"	24"	48"	140 lbs
MUSCO INTERFACE CABINET	MUSCO	N/A	10"	16"	20"	40 lbs
NEMA 3R ENCLOSURE	HOFFMAN	A20R208HCR	8"	20"	24"	40.8 lbs

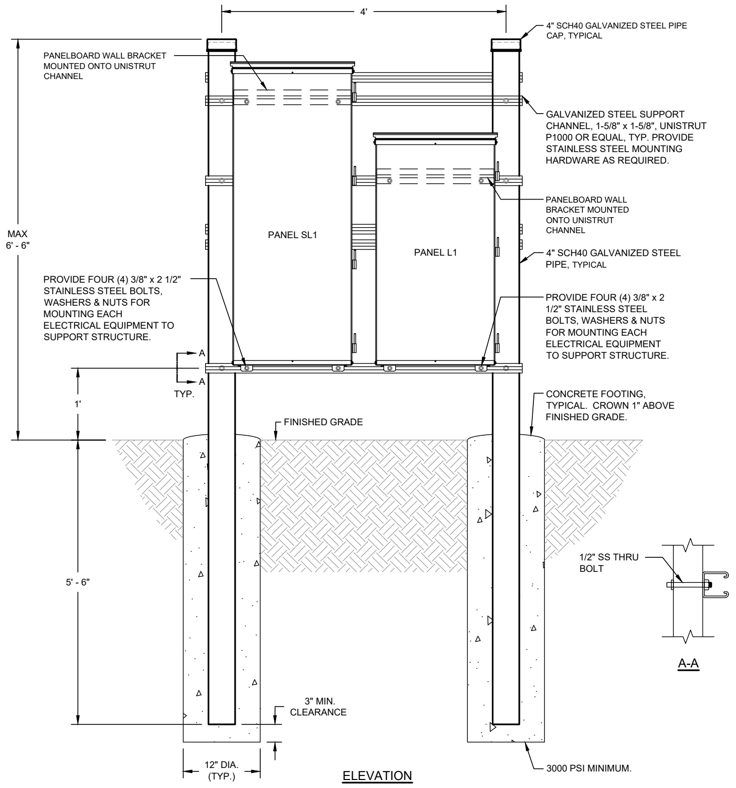
4'
4" SCH40 GALVANIZED STEEL PIPE CAP, TYPICAL
PANELBOARD WALL BRACKET MOUNTED ONTO UNISTRUT CHANNEL
GALVANIZED STEEL SUPPORT CHANNEL, 1-5/8" x 1-5/8", UNISTRUT P1000 OR EQUAL, TYP. PROVIDE STAINLESS STEEL MOUNTING HARDWARE AS REQUIRED.
PANELBOARD WALL BRACKET MOUNTED ONTO UNISTRUT CHANNEL
MAX 6' - 6"
PANEL SL1
PANEL L1
4" SCH40 GALVANIZED STEEL PIPE, TYPICAL
PROVIDE FOUR (4) 3/8" x 2 1/2" STAINLESS STEEL BOLTS, WASHERS & NUTS FOR MOUNTING EACH ELECTRICAL EQUIPMENT TO SUPPORT STRUCTURE.
PROVIDE FOUR (4) 3/8" x 2 1/2" STAINLESS STEEL BOLTS, WASHERS & NUTS FOR MOUNTING EACH ELECTRICAL EQUIPMENT TO SUPPORT STRUCTURE.
A
A
TYP.
1'
FINISHED GRADE
CONCRETE FOOTING, TYPICAL. CROWN 1" ABOVE FINISHED GRADE.
5' - 6"
1/2" SS THRU BOLT
A-A
3" MIN. CLEARANCE
12" DIA. (TYP.)
ELEVATION
3000 PSI MINIMUM.

ELECTRICAL EQUIPMENT NORTH ELEVATION DETAIL

SCALE : NO SCALE

8
E4.1

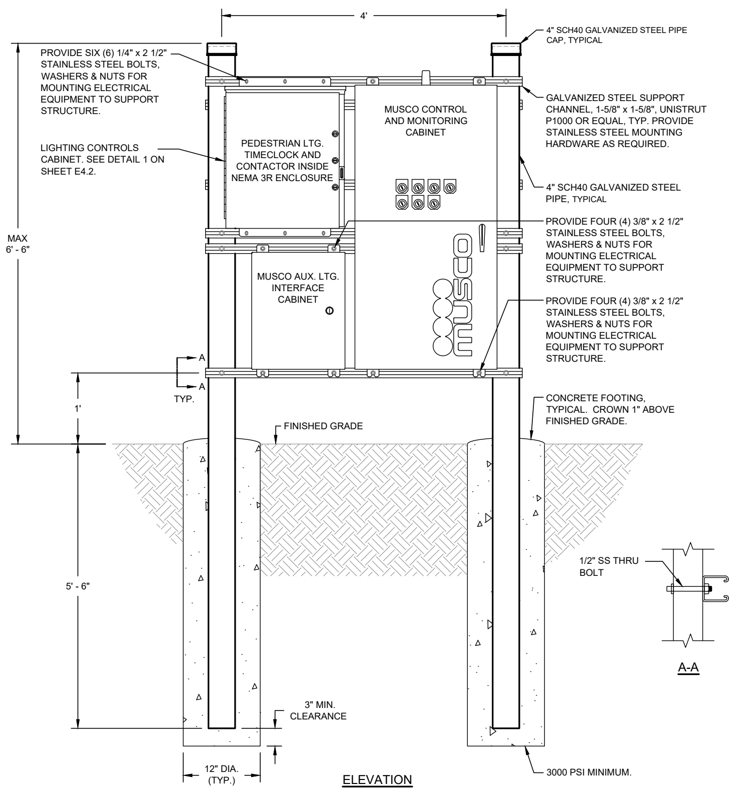
4'
4" SCH40 GALVANIZED STEEL PIPE CAP, TYPICAL
PROVIDE SIX (6) 1/4" x 2 1/2" STAINLESS STEEL BOLTS, WASHERS & NUTS FOR MOUNTING ELECTRICAL EQUIPMENT TO SUPPORT STRUCTURE.
GALVANIZED STEEL SUPPORT CHANNEL, 1-5/8" x 1-5/8", UNISTRUT P1000 OR EQUAL, TYP. PROVIDE STAINLESS STEEL MOUNTING HARDWARE AS REQUIRED.
LIGHTING CONTROLS CABINET. SEE DETAIL 1 ON SHEET E4.2.
PEDESTRIAN LTG. TIMECLOCK AND CONTACTOR INSIDE NEMA 3R ENCLOSURE
MUSCO CONTROL AND MONITORING CABINET
4" SCH40 GALVANIZED STEEL PIPE, TYPICAL
MAX 6' - 6"
PROVIDE FOUR (4) 3/8" x 2 1/2" STAINLESS STEEL BOLTS, WASHERS & NUTS FOR MOUNTING ELECTRICAL EQUIPMENT TO SUPPORT STRUCTURE.
MUSCO AUX. LTG. INTERFACE CABINET
musco
PROVIDE FOUR (4) 3/8" x 2 1/2" STAINLESS STEEL BOLTS, WASHERS & NUTS FOR MOUNTING ELECTRICAL EQUIPMENT TO SUPPORT STRUCTURE.
A
A
TYP.
1'
FINISHED GRADE
CONCRETE FOOTING, TYPICAL. CROWN 1" ABOVE FINISHED GRADE.
5' - 6"
1/2" SS THRU BOLT
A-A
3" MIN. CLEARANCE
12" DIA. (TYP.)
ELEVATION
3000 PSI MINIMUM.

ELECTRICAL EQUIPMENT SOUTH ELEVATION DETAIL

SCALE : NO SCALE

9
E4.1

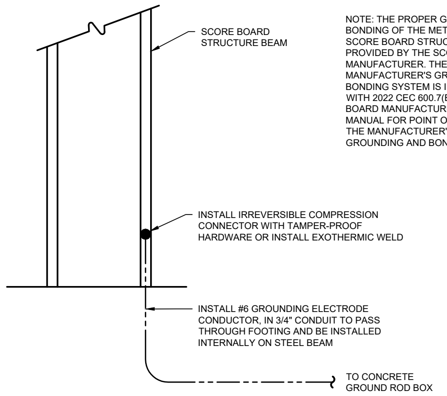
SCORE BOARD STRUCTURE BEAM
INSTALL IRREVERSIBLE COMPRESSION CONNECTOR WITH TAMPER-PROOF HARDWARE OR INSTALL EXOTHERMIC WELD
INSTALL #6 GROUNDING ELECTRODE CONDUCTOR, IN 3/4" CONDUIT TO PASS THROUGH FOOTING AND BE INSTALLED INTERNALLY ON STEEL BEAM
TO CONCRETE GROUND ROD BOX

NOTE: THE PROPER GROUNDING AND BONDING OF THE METAL PARTS AND SCORE BOARD STRUCTURE IS PROVIDED BY THE SCORE BOARD MANUFACTURER. THE SCORE BOARD MANUFACTURER'S GROUNDING AND BONDING SYSTEM IS IN COMPLIANCE WITH 2022 CEC 600.7(B). SEE SCORE BOARD MANUFACTURER INSTALLATION MANUAL FOR POINT OF CONNECTION TO THE MANUFACTURER'S FABRICATED GROUNDING AND BONDING SYSTEM.

SCORE BOARD STEEL GROUNDING SYSTEM DIAGRAM

SCALE : NO SCALE

5
E4.1

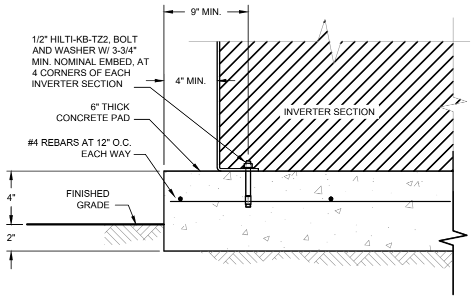
9" MIN.
1/2" HILTI-KB-TZ2, BOLT AND WASHER W/ 3-3/4" MIN. NOMINAL EMBED, AT 4 CORNERS OF EACH INVERTER SECTION
4" MIN.
INVERTER SECTION
6" THICK CONCRETE PAD
#4 REBARS AT 12" O.C. EACH WAY
4"
FINISHED GRADE
2"

INVERTER PAD MOUNT DETAIL

SCALE : NO SCALE

6
E4.1

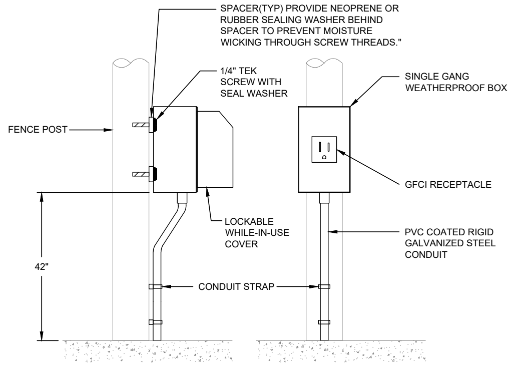
SPACER(TYP) PROVIDE NEOPRENE OR RUBBER SEALING WASHER BEHIND SPACER TO PREVENT MOISTURE WICKING THROUGH SCREW THREADS."
1/4" TEK SCREW WITH SEAL WASHER
SINGLE GANG WEATHERPROOF BOX
FENCE POST
GFCI RECEPTACLE
LOCKABLE WHILE-IN-USE COVER
PVC COATED RIGID GALVANIZED STEEL CONDUIT
42"
CONDUIT STRAP

RECEPTACLE MOUNTING DETAIL

SCALE : NO SCALE

7
E4.1

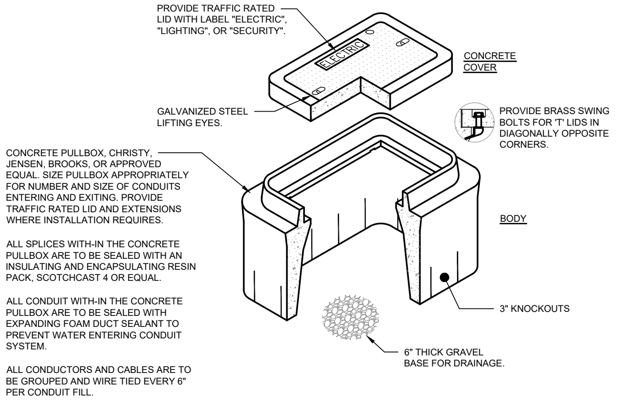
PROVIDE TRAFFIC RATED LID WITH LABEL "ELECTRIC", "LIGHTING", OR "SECURITY".
ELECTRIC
CONCRETE COVER
GALVANIZED STEEL LIFTING EYES.
PROVIDE BRASS SWING BOLTS FOR 'T' LIDS IN DIAGONALLY OPPOSITE CORNERS.
CONCRETE PULLBOX, CHRISTY, JENSEN, BROOKS, OR APPROVED EQUAL. SIZE PULLBOX APPROPRIATELY FOR NUMBER AND SIZE OF CONDUITS ENTERING AND EXITING. PROVIDE TRAFFIC RATED LID AND EXTENSIONS WHERE INSTALLATION REQUIRES.
BODY
3" KNOCKOUTS
6" THICK GRAVEL BASE FOR DRAINAGE.

ALL SPLICES WITH-IN THE CONCRETE PULLBOX ARE TO BE SEALED WITH AN INSULATING AND ENCAPSULATING RESIN PACK, SCOTCHCAST 4 OR EQUAL.

ALL CONDUIT WITH-IN THE CONCRETE PULLBOX ARE TO BE SEALED WITH EXPANDING FOAM DUCT SEALANT TO PREVENT WATER ENTERING CONDUIT SYSTEM.

ALL CONDUCTORS AND CABLES ARE TO BE GROUPED AND WIRE TIED EVERY 6" PER CONDUIT FILL.

TYPICAL CONCRETE PULLBOX DETAIL

SCALE : NO SCALE

1
E4.1

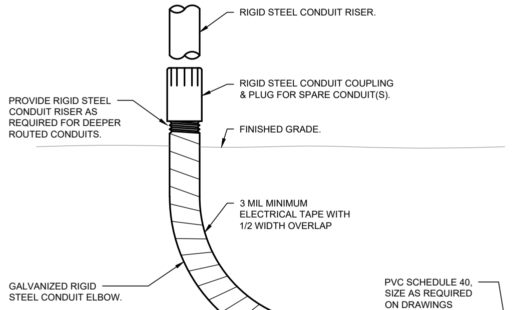
RIGID STEEL CONDUIT RISER.
RIGID STEEL CONDUIT COUPLING & PLUG FOR SPARE CONDUIT(S).
PROVIDE RIGID STEEL CONDUIT RISER AS REQUIRED FOR DEEPER ROUTED CONDUITS.
FINISHED GRADE.
3 MIL MINIMUM ELECTRICAL TAPE WITH 1/2 WIDTH OVERLAP
GALVANIZED RIGID STEEL CONDUIT ELBOW.
PVC SCHEDULE 40, SIZE AS REQUIRED ON DRAWINGS

NOTES:
COORDINATE COUPLING LOCATION TO MATCH LOCATION OF FUTURE EQUIPMENT WHERE REQUIRED.

CONDUIT STUB-UP DETAIL

SCALE : NO SCALE

2
E4.1

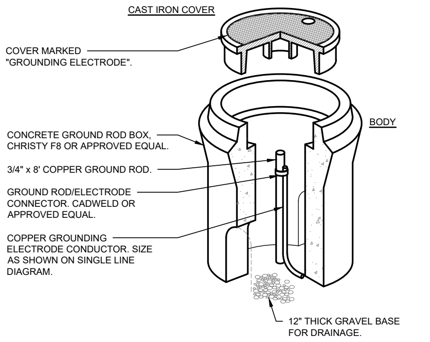
CAST IRON COVER
COVER MARKED "GROUNDING ELECTRODE".
BODY
CONCRETE GROUND ROD BOX, CHRISTY F8 OR APPROVED EQUAL.
3/4" x 8' COPPER GROUND ROD.
GROUND ROD/ELECTRODE CONNECTOR. CADWELD OR APPROVED EQUAL.
COPPER GROUNDING ELECTRODE CONDUCTOR. SIZE AS SHOWN ON SINGLE LINE DIAGRAM.
12" THICK GRAVEL BASE FOR DRAINAGE.

TYPICAL CONCRETE GROUND ROD BOX DETAIL

SCALE : NO SCALE

3
E4.1

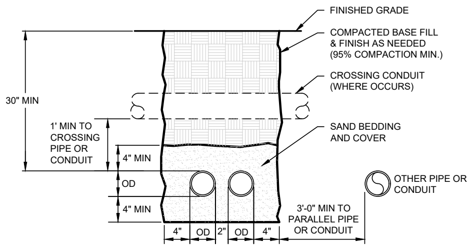
FINISHED GRADE
COMPACTED BASE FILL & FINISH AS NEEDED (95% COMPACTION MIN.)
CROSSING CONDUIT (WHERE OCCURS)
30" MIN
1' MIN TO CROSSING PIPE OR CONDUIT
SAND BEDDING AND COVER
4" MIN
OD
4" MIN
OTHER PIPE OR CONDUIT
3'-0" MIN TO PARALLEL PIPE OR CONDUIT
4"
OD
2"
OD
4"

NOTE:
TRENCHING LOCATED IN PAVED AREAS - ALL EARTHWORK AND REPAIR SHALL BE IN ACCORDANCE WITH AGENCY THAT HAS JURISDICTION.

TYPICAL TRENCH DETAIL

SCALE : NO SCALE

4
E4.1

IDENTIFICATION STAMP
DIV. OF THE STATE ARCHITECT
APP: 02-123587 INC:
REVIEWED FOR
SS ☑ FLS ☑ ACS ☑
DATE: 01/16/2026

VERDE DESIGN
LANDSCAPE ARCHITECTURE
CIVIL ENGINEERING
SPORT PLANNING & DESIGN

1843 Iron Point Rd. Suite 140
Folsom, CA 95630
tel: 916.415.6554
fax: 916.415.6525
www.VerdeDesignInc.com

STAMP

NATHAN A. HEARN
No. E 23927
3-31-2026
Nathan A. Hearn
Date Signed: 12/08/2025

CONSULTANT

capital engineering
RANCHO CORDOVA, CALIFORNIA

NH - RK/NO	240739.00
PM - DESIGN TEAM	PROJECT NO.

SHEET TITLE
ELECTRICAL DETAILS

PROJECT NAME
LODI HIGH SCHOOL
ATHLETIC FIELD
IMPROVEMENTS

PROJECT ADDRESS
3 S PACIFIC AVE
LODI, CA
95242

SUBMITTAL	DATE
50% DSA SUBMITTAL	07/31/25
100% DSA SUBMITTAL	09/25/25
DSA BACKCHECK SUBMITTAL	12/17/25
DSA BACKCHECK SUBMITTAL	01/08/26

NO.	REVISIONS	DATE
△		
△		
△		
△		
△		
△		

DRAWN BY: RK
CHECKED BY: NH
DATE ISSUED: 01/08/2026
SCALE:
PROJ. NO.: 2502700
SHEET NO.: E4.1

ALL IDEAS, DESIGNS, ARRANGEMENTS, AND PLANS INDICATED OR REPRESENTED BY THIS DRAWING ARE OWNED BY AND THE PROPERTY OF VERDE DESIGN, INC. AND WERE CREATED, EVOLVED, AND DEVELOPED FOR USE ON AND IN CONNECTION WITH THE SPECIFIED PROJECT. NONE OF SUCH IDEAS, DESIGNS, ARRANGEMENTS OR PLANS SHALL BE USED, REPRODUCED, OR PUBLISHED BY ANY METHOD, IN WHOLE OR IN PART, OR DISCLOSED TO ANY PERSON, FIRM, OR CORPORATION FOR ANY PURPOSE WHATSOEVER WITHOUT WRITTEN PERMISSION OF VERDE DESIGN, INC.

DRAWING NAME: \\capsac.lan\network\Project_Docs\2024\240739.00\1200 Drawings\1205 AutoCAD Project Files\E4.1-E4.2 ELECTRICAL DETAILS.dwg
PLOT DATE: 12-04-25 PLOTTED BY: Rustem.Kopbayev

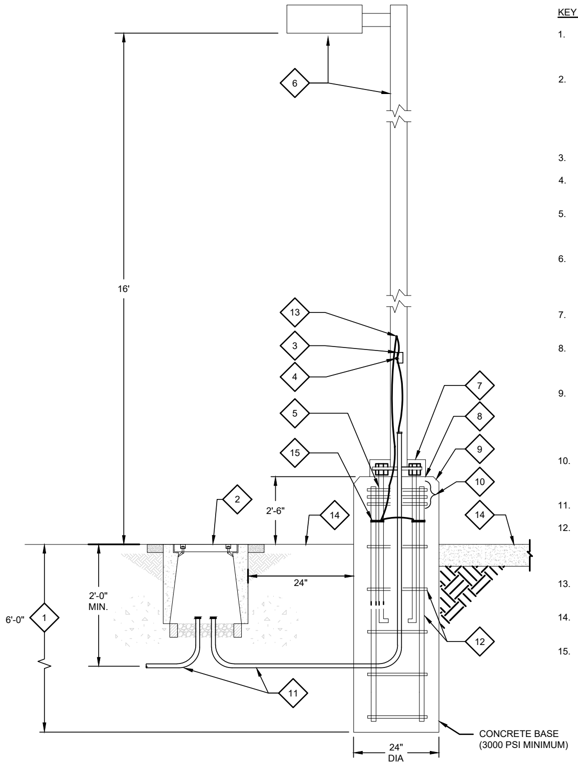
6
16'
13
3
4
5
15
7
8
9
10
2
2'-6"
14
14
24"
2'-0"
MIN.
6'-0"
1
12
11
CONCRETE BASE
(3000 PSI MINIMUM)
24"
DIA

APPLICABLE AT PARKING LOTS

KEY NOTES:

1. PROVIDE 6' DEPTH. COORDINATE CONCRETE BASE SIZE WITH STRUCTURAL ENGINEER.
2. UNDERGROUND PULL BOX REQUIRED ADJACENT TO POLE BASE. SEE DETAIL "2/E7.0" FOR INFORMATION ON NUMBER OF PULL BOXES NEEDED AND CONTENTS OF PULL BOXES. SET TOP OF PULL BOX FLUSH WITH FINISHED GRADE.
3. GASKETED HANDHOLE 3FT AFF.
4. CONNECT GROUND WIRE TO GROUNDING LUG OF POLE AT HANDHOLE.
5. 4 - 3/4" DIA. WITH MINIMUM 17" EMBEDMENT ANCHOR BOLTS WITH 4" HOOKS.
6. LIGHT FIXTURE AND/OR POLE PER PLAN AND SPECIFICATION. FIXTURE WIRE THROUGH POLE TO LUMINAIRE TO BE RATED FOR 90C.
7. BASECOVER, SECURE TO POLE AND/OR BASE.
8. PROVIDE 1 1/2" MINIMUM GROUT AROUND THE BASE AFTER PLUMB. SLOPE TO GRADE FOR DRAINAGE.
9. PROVIDE CONCRETE BASE WITH 1/2" CHAMFER. CONCRETE FILL AND SACK FINISH ALL CONCRETE SURFACE IMPERFECTIONS, CAVITIES AND VOIDS ABOVE FINISHED GRADE.
10. PROVIDE (3) #3 REBAR TIES, REINFORCE STEEL HOOPS 2" ON CENTERED WITHIN TOP 5"AREA.
11. CONDUIT PER PLAN.
12. PROVIDE (6) #4 REINFORCE STEEL RODS AND #3 REINFORCE STEEL HOOPS 12" ON CENTER. SIZE PER MANUFACTURER'S STANDARDS.
13. SPLICE GROUND WIRE AND EXTEND TO GROUND CLAMP AT ANCHOR BOLT.
14. FINISHED GRADE OR PAVING PER ARCHITECTURAL DRAWINGS.
15. UL LISTED GROUND CLAMP SUITABLE FOR CONCRETE ENCASEMENT OR DIRECT BURIAL. INSTALL CLAMPS ON ALL ANCHOR BOLTS, TYPICAL.

NOT PART OF THE DSA APPROVAL

TYPICAL POLE MOUNTED SITE LIGHTING DETAIL

SCALE : NO SCALE

2
E4.2

LCC EQUIPMENT LIST

TAG	EQUIPMENT	MANUFACTURER/MODEL
PC-1	PHOTOCELL	INTERMATIC MODEL ELC4536/K121 OR EQUAL
TC-1	TIMECLOCK. 4 CIRCUIT ASTRONOMIC	INTERMATIC MODEL ET2845C OR EQUAL
HS-X	SELECTOR SWITCH (3-POSITION)	SQUARE D CLASS 9001K OR EQUAL
LC-X	LIGHTING CONTACTOR (4 & 6-POLE, 30 AMP)	SQUARE D CLASS 8903, TYPE L OR EQUAL
CB-1	MINATURE CIRCUIT BREAKER (10 AMP, 120 VAC)	SQUARE D QOB OR EQUAL

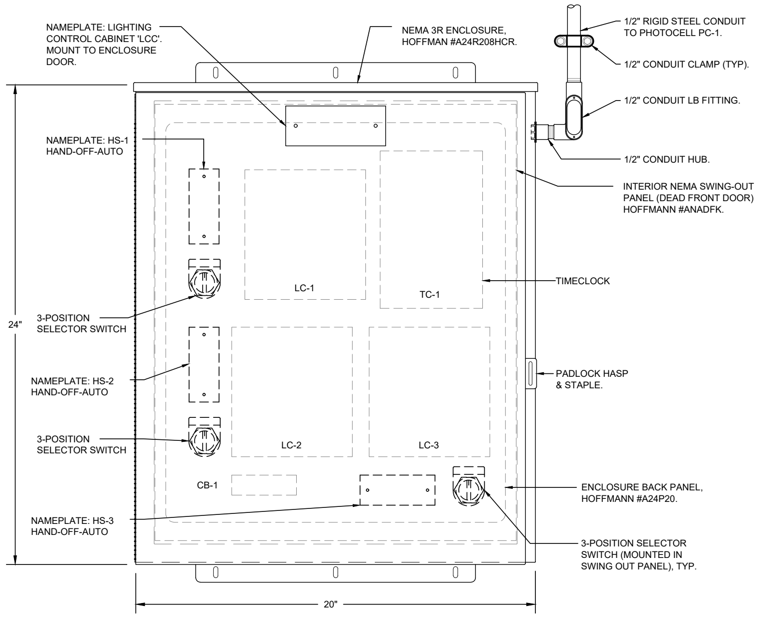
NAMEPLATE: LIGHTING CONTROL CABINET 'LCC'. MOUNT TO ENCLOSURE DOOR.
NEMA 3R ENCLOSURE, HOFFMAN #A24R208HCR.
1/2" RIGID STEEL CONDUIT TO PHOTOCELL PC-1.
1/2" CONDUIT CLAMP (TYP).
1/2" CONDUIT LB FITTING.
NAMEPLATE: HS-1 HAND-OFF-AUTO
1/2" CONDUIT HUB.
INTERIOR NEMA SWING-OUT PANEL (DEAD FRONT DOOR) HOFFMANN #ANADFK.
24"
LC-1
TC-1
TIMECLOCK
3-POSITION SELECTOR SWITCH
NAMEPLATE: HS-2 HAND-OFF-AUTO
PADLOCK HASP & STAPLE.
3-POSITION SELECTOR SWITCH
LC-2
LC-3
CB-1
ENCLOSURE BACK PANEL, HOFFMANN #A24P20.
NAMEPLATE: HS-3 HAND-OFF-AUTO
3-POSITION SELECTOR SWITCH (MOUNTED IN SWING OUT PANEL), TYP.
20"

NOTE: SEE LIGHTING CONTROLS CABINET ON DETAIL 9 ON SHEET E4.1 FOR ELEVATION DETAIL.

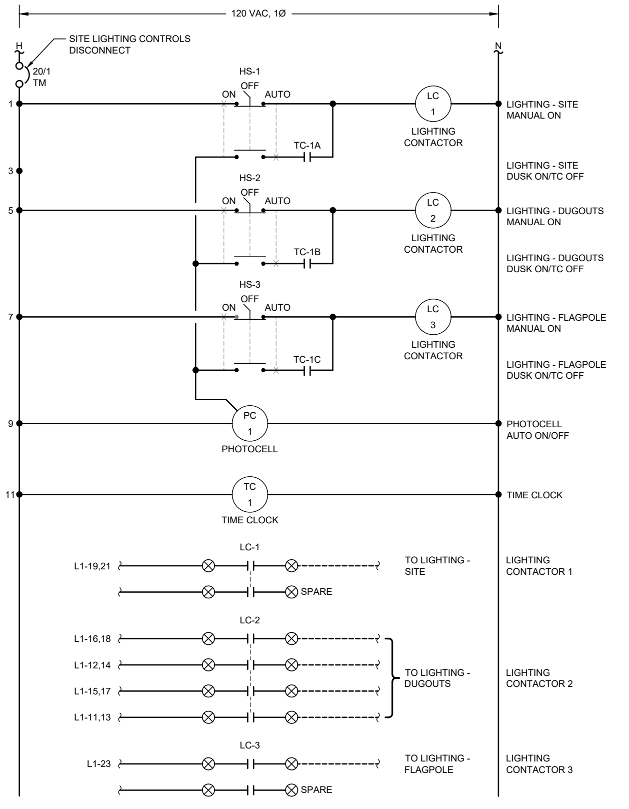
120 VAC, 1Ø
H
SITE LIGHTING CONTROLS DISCONNECT
20/1
TM
N
1
HS-1
OFF
ON
AUTO
LC
1
LIGHTING CONTACTOR
LIGHTING - SITE MANUAL ON
TC-1A
3
LIGHTING - SITE DUSK ON/TC OFF
HS-2
OFF
ON
AUTO
5
LC
2
LIGHTING CONTACTOR
LIGHTING - DUGOUTS MANUAL ON
TC-1B
LIGHTING - DUGOUTS DUSK ON/TC OFF
HS-3
OFF
ON
AUTO
7
LC
3
LIGHTING CONTACTOR
LIGHTING - FLAGPOLE MANUAL ON
TC-1C
LIGHTING - FLAGPOLE DUSK ON/TC OFF
9
PC
1
PHOTOCELL
PHOTOCELL AUTO ON/OFF
11
TC
1
TIME CLOCK
TIME CLOCK
LC-1
L1-19,21
TO LIGHTING - SITE
LIGHTING CONTACTOR 1
SPARE
LC-2
L1-16,18
L1-12,14
L1-15,17
L1-11,13
TO LIGHTING - DUGOUTS
LIGHTING CONTACTOR 2
LC-3
L1-23
TO LIGHTING - FLAGPOLE
LIGHTING CONTACTOR 3
SPARE

LIGHTING CONTROL CABINET - 'LCC'

SCALE : NO SCALE

1
E4.2

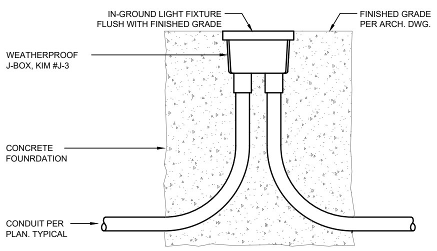
IN-GROUND LIGHT FIXTURE FLUSH WITH FINISHED GRADE
FINISHED GRADE PER ARCH. DWG.
WEATHERPROOF J-BOX, KIM #J-3
CONCRETE FOUNRDATION
CONDUIT PER PLAN. TYPICAL

IN-GROUND MOUNTED FLAGPOLE FIXTURE

SCALE : NO SCALE

3
E4.2

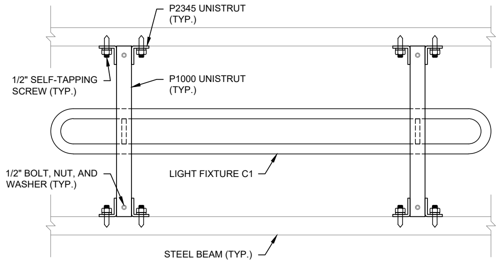
P2345 UNISTRUT (TYP.)
1/2" SELF-TAPPING SCREW (TYP.)
P1000 UNISTRUT (TYP.)
1/2" BOLT, NUT, AND WASHER (TYP.)
LIGHT FIXTURE C1
STEEL BEAM (TYP.)

SURFACE MOUNTED DUGOUT CEILING FIXTURE

SCALE : NO SCALE

4
E4.2

IDENTIFICATION STAMP
DIV. OF THE STATE ARCHITECT
APP: 02-123587 INC:
REVIEWED FOR
SS ☑ FLS ☑ ACS ☑
DATE: 01/16/2026

VERDE DESIGN
LANDSCAPE ARCHITECTURE
CIVIL ENGINEERING
SPORT PLANNING & DESIGN
1843 Iron Point Rd. Suite 140
Folsom, CA 95630
tel: 916.415.6554
fax: 916.415.6525
www.VerdeDesignInc.com

STAMP

NATHAN A. HEARN
No. E 23927
3-31-2026
Date Signed: 12/08/2025

CONSULTANT

capital engineering
RANCHO CORDOVA, CALIFORNIA

NH - RK/NO	240739.00
PM - DESIGN TEAM	PROJECT NO.

SHEET TITLE
ELECTRICAL DETAILS

PROJECT NAME
LODI HIGH SCHOOL
ATHLETIC FIELD
IMPROVEMENTS

PROJECT ADDRESS
3 S PACIFIC AVE
LODI, CA
95242

SUBMITTAL	DATE
50% DSA SUBMITTAL	07/31/25
100% DSA SUBMITTAL	09/25/25
DSA BACKCHECK SUBMITTAL	12/17/25
DSA BACKCHECK SUBMITTAL	01/08/26

NO.	REVISIONS	DATE
△		
△		
△		
△		
△		
△		

DRAWN BY RK	CHECKED BY NH
DATE ISSUED 01/08/2026	SCALE

PROJ. NO.
2502700

SHEET NO.
E4.2

ALL IDEAS, DESIGNS, ARRANGEMENTS, AND PLANS INDICATED OR REPRESENTED BY THIS DRAWING ARE OWNED BY AND THE PROPERTY OF VERDE DESIGN, INC. AND WERE CREATED, EVOLVED, AND DEVELOPED FOR USE ON AND IN CONNECTION WITH THE SPECIFIED PROJECT. NONE OF SUCH IDEAS, DESIGNS, ARRANGEMENTS OR PLANS SHALL BE USED, REPRODUCED, OR PUBLISHED BY ANY METHOD, IN WHOLE OR IN PART, OR DISCLOSED TO ANY PERSON, FIRM, OR CORPORATION FOR ANY PURPOSE WHATSOEVER WITHOUT WRITTEN PERMISSION OF VERDE DESIGN, INC.

Lodi High School Softball And Baseball Field
Lodi,CA

LIGHTING SYSTEM

Structure/Fixture Summary

Structure ID	Structure Height	Fixt. Attachment Ht.	Fixture Qty	Fixture Type	Design Load	Circuit
A1	60'	60'	1	TLC-LED-1200	1.16 kW	A
		60'	1	TLC-LED-550	0.53 kW	D
		60'	2	TLC-LED-550	1.05 kW	A
		60'	2	TLC-LED-900	1.76 kW	A
		16'	1	TLC-BT-575	0.57 kW	A
A2	60'	60'	1	TLC-LED-550	0.53 kW	D
		60'	2	TLC-LED-900	1.76 kW	A
		60'	1	TLC-LED-1200	1.16 kW	A
		16'	1	TLC-BT-575	0.57 kW	A
A3-A4	70'	70'	3	TLC-LED-1200	3.49 kW	B
		70'	1	TLC-LED-550	0.53 kW	D
		70'	1	TLC-LED-1500	1.40 kW	B
		16'	1	TLC-BT-575	0.57 kW	B
B1-B2	70'	70'	1	TLC-LED-900	0.88 kW	A
		70'	4	TLC-LED-1500	5.59 kW	A
		60'	1	TLC-LED-550	0.53 kW	D
		16'	2	TLC-BT-575	1.15 kW	A
B3	90'	90'	5	TLC-LED-1500	6.98 kW	B
		70'	2	TLC-LED-550	1.05 kW	D
		16'	2	TLC-BT-575	1.15 kW	B
B4	80'	80'	2	TLC-LED-550	1.05 kW	D
		80'	2	TLC-LED-900	1.76 kW	B
		80'	4	TLC-LED-1500	5.59 kW	B
		16'	2	TLC-BT-575	1.15 kW	B
C1	70'	70'	2	TLC-LED-900	1.76 kW	B
		70'	1	TLC-LED-1200	1.16 kW	B
		16'	1	TLC-BT-575	0.57 kW	B
C2	70'	70'	1	TLC-LED-1200	1.16 kW	B
		70'	2	TLC-LED-900	1.76 kW	B
		60'	2	TLC-LED-550	1.05 kW	D
		16'	1	TLC-BT-575	0.57 kW	B
D1-D2	70'	70'	1	TLC-LED-900	0.88 kW	B
		70'	3	TLC-LED-1500	4.19 kW	B
		16'	1	TLC-BT-575	0.57 kW	B
12			79		75.47 kW	

*Fixtures in this design have dimmed output values to meet design specific needs.

Circuit Summary

Circuit	Description	Design Load	Fixture Qty
A	Softball	23.29 kW	24
B	Baseball	45.86 kW	43
D	Egress	6.32 kW	12

Fixture Type Summary

Type	Circuit	Source	Avg. Wattage	Avg. Lumens	L90	L80	L70	Quantity
TLC-BT-575	A	LED 5700K - 75 CRI	575W	52,651	>120,000	>120,000	>120,000	6
TLC-BT-575	B	LED 5700K - 75 CRI	575W	52,651	>120,000	>120,000	>120,000	10
TLC-LED-1200	A	LED 5700K - 75 CRI	1165W	153,800	>120,000	>120,000	>120,000	2
TLC-LED-1200	B	LED 5700K - 75 CRI	1165W	155,133	>120,000	>120,000	>120,000	8
TLC-LED-1500	A	LED 5700K - 75 CRI	1397W	177,936	>120,000	>120,000	>120,000	8
TLC-LED-1500	B	LED 5700K - 75 CRI	1397W	182,897	>120,000	>120,000	>120,000	17
TLC-LED-550	A	LED 5700K - 75 CRI	527W	66,679	>120,000	>120,000	>120,000	2
TLC-LED-550	D	LED 5700K - 75 CRI	527W	67,468	>120,000	>120,000	>120,000	12
TLC-LED-900	A	LED 5700K - 75 CRI	880W	97,647	>120,000	>120,000	>120,000	6
TLC-LED-900	B	LED 5700K - 75 CRI	880W	98,543	>120,000	>120,000	>120,000	8

Single Fixture Amperage Draw Chart

Driver Specifications (.90 min power factor)	Line Amperage Per Fixture (max draw)						
Single Phase Voltage	208 (60)	220 (60)	240 (60)	277 (60)	347 (60)	380 (60)	480 (60)
TLC-LED-1500	8.4	7.9	7.3	6.3	5.0	4.6	3.6
TLC-LED-1200	6.9	6.5	6.0	5.2	4.2	3.8	3.0
TLC-LED-900	5.2	4.9	4.5	3.9	3.1	2.9	2.3
TLC-BT-575	3.3	3.2	2.9	2.5	2.0	1.8	1.5
TLC-LED-550	3.2	3.0	2.8	2.4	1.9	1.8	1.4

Guaranteed Performance: The ILLUMINATION described above is guaranteed per your Musco Warranty document.

Field Measurements: Individual field measurements may vary from computer-calculated predictions.

Electrical System Requirements: Refer to Amperage Draw Chart and/or the **"Musco Control System Summary"** for electrical sizing.

Installation Requirements: Results assume ± 3% nominal voltage at line side of the driver and structures located within 3 feet (1m) of design locations.

We Make It Happen.

ENGINEERED DESIGN By: William Isiminger • File #247112C • 10-Sep-25

Not to be reproduced in whole or part without the written consent of Musco Sports Lighting, LLC.
©1981, 2025 Musco Sports Lighting, LLC.

PROJECT SUMMARY

Lodi High School Softball And Baseball Field
Lodi,CA

*Amp draw based on 100% fixture output, consult design specific datasheet for adjusted amperage draw chart

Light Level Summary

Calculation Grid Summary

Grid Name	Calculation Metric	Illumination Ave					Circuits	Fixture Qty
		Ave	Min	Max	Max/Min	Ave/Min		
BB Batting Cage	Horizontal	7.05	1	18	22.42	8.70	B	43
BB LF Bullpen	Horizontal	23.62	21	27	1.25	1.11	B	43
BB RF Bullpen	Horizontal	24.11	18	30	1.66	1.33	B	43
Baseball (Infield)	Horizontal Illuminance	51.99	36	63	1.76	1.45	B	43
Baseball (Outfield)	Horizontal Illuminance	31.00	19	44	2.28	1.61	B	43
Egress Blanket Grid	Horizontal	1.40	0	26	-	-	D	12
SB Batting Cage	Horizontal	30.42	28	34	1.18	1.07	A	24
SB LF Bullpen	Horizontal	44.47	34	56	1.65	1.31	A	24
SB RF Bullpen	Horizontal	48.86	37	59	1.61	1.33	A	24
Softball (Infield)	Horizontal Illuminance	51.39	35	63	1.81	1.48	A	24
Softball (Outfield)	Horizontal Illuminance	32.18	20	52	2.64	1.63	A	24
Spill 3'	Horizontal	0.25	0	6	-	-	A,B,C,D	79
Spill 5'	Max Candela (by Fixture)	2413.05	6	18315	3028.40	399.00	A,B,C,D	79
Spill 5'	Max Vert Illuminance (by Light Bank)	0.32	0	7	-	-	A,B,C,D	79

Guaranteed Performance: The ILLUMINATION described above is guaranteed per your Musco Warranty document.

Field Measurements: Individual field measurements may vary from computer-calculated predictions.

Electrical System Requirements: Refer to Amperage Draw Chart and/or the **"Musco Control System Summary"** for electrical sizing.

Installation Requirements: Results assume ± 3% nominal voltage at line side of the driver and structures located within 3 feet (1m) of design locations.

We Make It Happen.

ENGINEERED DESIGN By: William Isiminger • File #247112C • 10-Sep-25

Not to be reproduced in whole or part without the written consent of Musco Sports Lighting, LLC.
©1981, 2025 Musco Sports Lighting, LLC.

PROJECT SUMMARY

Equipment List For Areas Shown

Structure				Fixtures				
QTY	STRUCTURE ID	SIZE	GRADE ELEVATION	ABOVE FIELD LEVEL	FIXTURE TYPE	QTY/POLE	THIS GRID	OTHER GRIDS
1	A1	60'	-	60'	TLC-LED-1200	1	1	0
				60'	TLC-LED-550	3*	2	1
				60'	TLC-LED-900	2	2	0
				15.5'	TLC-BT-575	1	1	0
1	A2	60'	-	60'	TLC-LED-1200	1	1	0
				60'	TLC-LED-550	1	0	1
				60'	TLC-LED-900	2	2	0
				15.5'	TLC-BT-575	1	1	0
2	B1-B2	70'	-	70'	TLC-LED-1500	4	4	0
				70'	TLC-LED-900	1	1	0
				60'	TLC-LED-550	1	0	1
				15.5'	TLC-BT-575	2	2	0
4	Totals					28	24	4

Above Field Level is height of fixtures above area shown

*This structure utilizes a back-to-back mounting configuration

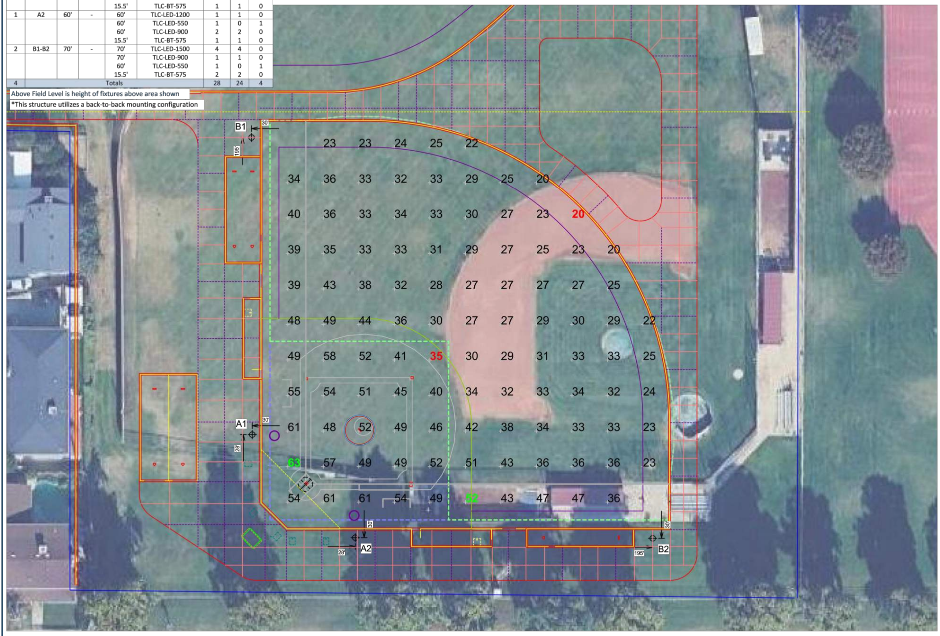

SCALE IN FEET 1 : 40
0' 40' 80'

Pole location(s) ⊕ dimensions are relative to 0,0 reference point(s) ⊠

ENGINEERED DESIGN By: William Isiminger • File #247112C • 10-Sep-25

Lodi High School Softball And Baseball Field
Lodi,CA

Grid Summary

Name:	**Softball**
Size:	205'/220'/205' - basepath 60'
Spacing:	20.0' x 20.0'
Height:	3.0' above grade

Illumination Summary

	MAINTAINED HORIZONTAL FOOTCANDLES	
	Infield	Outfield
Guaranteed Average:	**50**	**30**
Scan Average:	51.39	32.18
Maximum:	63	52
Minimum:	35	20
Avg/Min:	1.48	1.63
Guaranteed Max/Min:	**2**	**2.5**
Max/Min:	1.81	2.64
UG (adjacent pts):	1.28	1.56
CU:	0.57	
No. of Points:	25	82
FIXTURE INFORMATION		
Applied Circuits:	A	
No. of Fixtures:	**24**	
Total Load:	23.29 kW	

Guaranteed Performance: The ILLUMINATION described above is guaranteed per your Musco Warranty document.

Field Measurements: Individual field measurements may vary from computer-calculated predictions.

Electrical System Requirements: Refer to Amperage Draw Chart and/or the **"Musco Control System Summary"** for electrical sizing.

Installation Requirements: Results assume ± 3% nominal voltage at line side of the driver and structures located within 3 feet (1m) of design locations.

We Make It Happen.

Not to be reproduced in whole or part without the written consent of Musco Sports Lighting, LLC.
©1981, 2025 Musco Sports Lighting, LLC.

ILLUMINATION SUMMARY

Equipment List For Areas Shown

Structure				Fixtures				
QTY	STRUCTURE ID	SIZE	GRADE ELEVATION	ABOVE FIELD LEVEL	FIXTURE TYPE	QTY/POLE	THIS GRID	OTHER GRIDS
1	A1	60'	-	60'	TLC-LED-1200	1	1	0
				60'	TLC-LED-550	3*	2	1
				60'	TLC-LED-900	2	2	0
				15.5'	TLC-BT-575	1	1	0
1	A2	60'	-	60'	TLC-LED-1200	1	1	0
				60'	TLC-LED-550	1	0	1
				60'	TLC-LED-900	2	2	0
				15.5'	TLC-BT-575	1	1	0
2	B1-B2	70'	-	70'	TLC-LED-1500	4	4	0
				70'	TLC-LED-900	1	1	0
				60'	TLC-LED-550	1	0	1
				15.5'	TLC-BT-575	2	2	0
4	Totals					28	24	4

Above Field Level is height of fixtures above area shown

*This structure utilizes a back-to-back mounting configuration

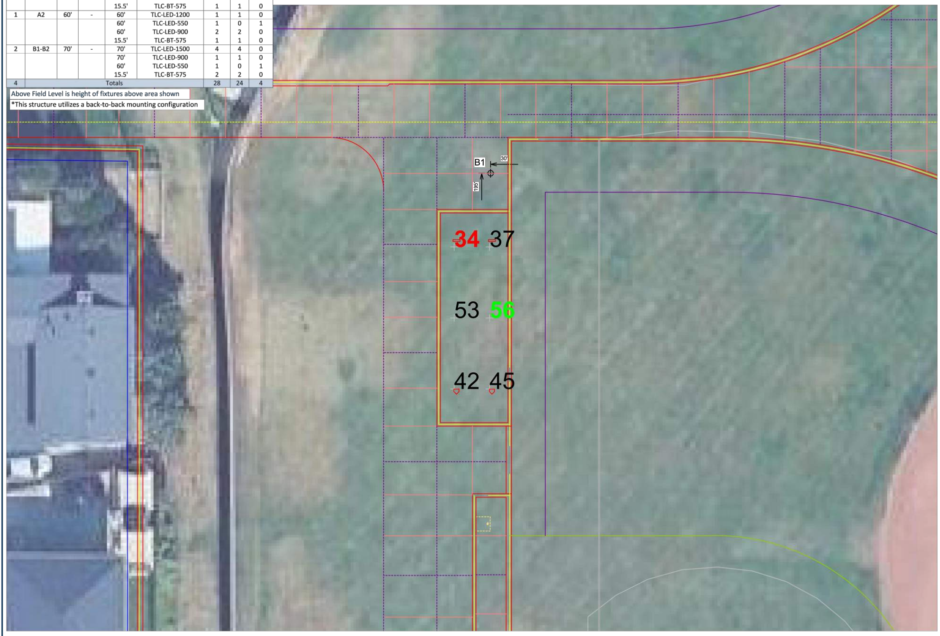

SCALE IN FEET 1 : 20
0' 20' 40'

Pole location(s) ⊕ dimensions are relative to 0,0 reference point(s) ⊠

ENGINEERED DESIGN By: William Isiminger • File #247112C • 10-Sep-25

Lodi High School Softball And Baseball Field
Lodi,CA

Grid Summary

Name:	**SB LF Bullpen**
Size:	205'/220'/205' - basepath 60'
Spacing:	10.0' x 20.0'
Height:	3.0' above grade

Illumination Summary

	MAINTAINED HORIZONTAL FOOTCANDLES
	Entire Grid
Scan Average:	**44.47**
Maximum:	56
Minimum:	34
Avg/Min:	1.31
Max/Min:	**1.65**
UG (adjacent pts):	1.57
CU:	0.02
No. of Points:	6
FIXTURE INFORMATION	
Applied Circuits:	A
No. of Fixtures:	**24**
Total Load:	23.29 kW

Guaranteed Performance: The ILLUMINATION described above is guaranteed per your Musco Warranty document.

Field Measurements: Individual field measurements may vary from computer-calculated predictions.

Electrical System Requirements: Refer to Amperage Draw Chart and/or the **"Musco Control System Summary"** for electrical sizing.

Installation Requirements: Results assume ± 3% nominal voltage at line side of the driver and structures located within 3 feet (1m) of design locations.

We Make It Happen.

Not to be reproduced in whole or part without the written consent of Musco Sports Lighting, LLC.
©1981, 2025 Musco Sports Lighting, LLC.

ILLUMINATION SUMMARY

IDENTIFICATION STAMP
DIV. OF THE STATE ARCHITECT
APP: 02-123587 INC:
REVIEWED FOR
SS ☑ FLS ☑ ACS ☑
DATE: 01/16/2026

VERDE DESIGN
LANDSCAPE ARCHITECTURE
CIVIL ENGINEERING
SPORT PLANNING & DESIGN
1843 Iron Point Rd. Suite 140
Folsom, CA 95630
tel: 916.415.6554
fax: 916.415.6525
www.VerdeDesignInc.com

STAMP

NATHAN A. HEARN
No. E 23927
3-31-2026
Nathan A. Hearn
Date Signed: 12/08/2025

CONSULTANT

capital engineering
RANCHO CORDOVA, CALIFORNIA

NH - RK/NO	240739.00
PM - DESIGN TEAM	PROJECT NO.

SHEET TITLE
MUSCO DESIGN DRAWINGS

PROJECT NAME
LODI HIGH SCHOOL
ATHLETIC FIELD
IMPROVEMENTS

PROJECT ADDRESS
3 S PACIFIC AVE
LODI, CA
95242

SUBMITTAL	DATE
50% DSA SUBMITTAL	07/31/25
100% DSA SUBMITTAL	09/25/25
DSA BACKCHECK SUBMITTAL	12/17/25
DSA BACKCHECK SUBMITTAL	01/08/26

NO.	REVISIONS	DATE
△		
△		
△		
△		
△		
△		

DRAWN BY: RK
CHECKED BY: NH
DATE ISSUED: 01/08/2026
SCALE:
PROJ. NO.: 2502700
SHEET NO.: E5.1

MUSCO DESIGN DRAWINGS

ALL IDEAS, DESIGNS, ARRANGEMENTS, AND PLANS INDICATED OR REPRESENTED BY THIS DRAWING ARE OWNED BY AND THE PROPERTY OF VERDE DESIGN, INC. AND WERE CREATED, EVOLVED, AND DEVELOPED FOR USE ON AND IN CONNECTION WITH THE SPECIFIED PROJECT. NONE OF SUCH IDEAS, DESIGNS, ARRANGEMENTS OR PLANS SHALL BE USED, REPRODUCED, OR PUBLISHED BY ANY METHOD, IN WHOLE OR IN PART, OR DISCLOSED TO ANY PERSON, FIRM, OR CORPORATION FOR ANY PURPOSE WHATSOEVER WITHOUT WRITTEN PERMISSION OF VERDE DESIGN, INC.

DRAWING NAME: \\capsac.lan\network\Project_Docs\2024\240739.00\1200 Drawings\1205 AutoCAD Project Files\E5.1–E5.4 MUSCO DESIGN DRAWINGS.dwg
PLOT DATE: 12–04–25 PLOTTED BY: Rustem.Kopbayev

ALL IDEAS, DESIGNS, ARRANGEMENTS, AND PLANS INDICATED OR REPRESENTED BY THIS DRAWING ARE OWNED BY AND THE PROPERTY OF VERDE DESIGN, INC. AND WERE CREATED, EVOLVED, AND DEVELOPED FOR USE ON AND IN CONNECTION WITH THE SPECIFIED PROJECT. NONE OF SUCH IDEAS, DESIGNS, ARRANGEMENTS OR PLANS SHALL BE USED BY, OR DISCLOSED TO ANY PERSON, FIRM, OR CORPORATION FOR ANY PURPOSE WHATSOEVER WITHOUT WRITTEN PERMISSION OF VERDE DESIGN, INC.

Equipment List For Areas Shown

Structure				Fixtures				
QTY	STRUCTURE ID	SIZE	GRADE ELEVATION	ABOVE FIELD LEVEL	FIXTURE TYPE	QTY/POLE	THIS GRID	OTHER GRIDS
1	A1	60'	-	60'	TLC-LED-1200	1	1	0
				60'	TLC-LED-550	3*	2	1
				60'	TLC-LED-900	2	2	0
				15.5'	TLC-BT-575	1	1	0
1	A2	60'	-	60'	TLC-LED-1200	1	1	0
				60'	TLC-LED-550	1	0	1
				60'	TLC-LED-900	2	2	0
				15.5'	TLC-BT-575	1	1	0
2	B1-B2	70'	-	70'	TLC-LED-1500	4	4	0
				70'	TLC-LED-900	1	1	0
				60'	TLC-LED-550	1	0	1
				15.5'	TLC-BT-575	2	2	0
4	Totals					28	24	4

Above Field Level is height of fixtures above area shown

*This structure utilizes a back-to-back mounting configuration

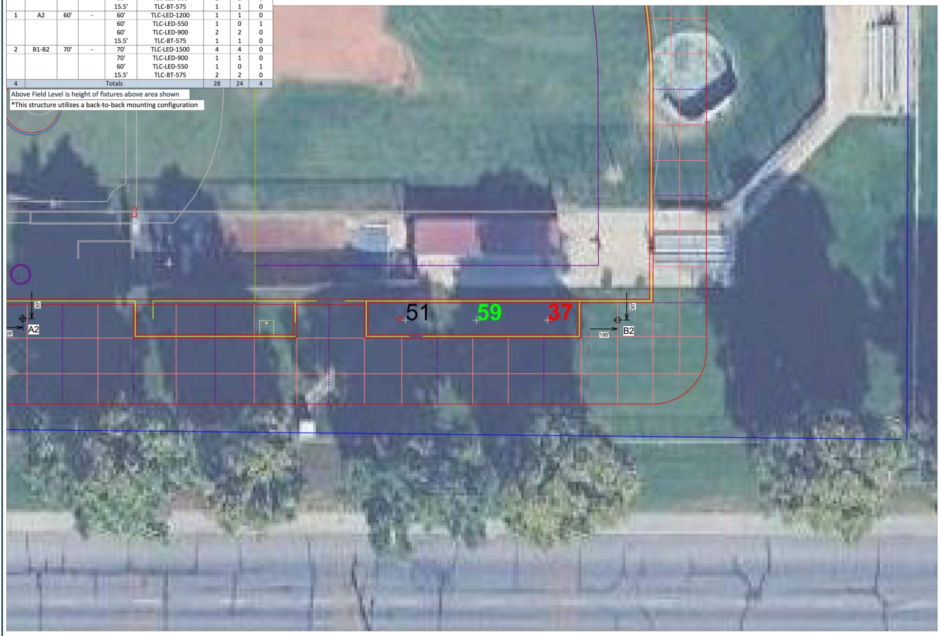

Lodi High School Softball And Baseball Field

Lodi,CA

Grid Summary

Name: **SB RF Bullpen**
Size: 205'/220'/205' - basepath 60'
Spacing: 20.0' x 10.0'
Height: 3.0' above grade

Illumination Summary

MAINTAINED HORIZONTAL FOOTCANDLES

	Entire Grid
Scan Average:	**48.86**
Maximum:	59
Minimum:	37
Avg/Min:	1.33
Max/Min:	**1.61**
UG (adjacent pts):	1.61
CU:	0.01
No. of Points:	3
FIXTURE INFORMATION	
Applied Circuits:	A
No. of Fixtures:	**24**
Total Load:	23.29 kW

Guaranteed Performance: The ILLUMINATION described above is guaranteed per your Musco Warranty document.

Field Measurements: Individual field measurements may vary from computer-calculated predictions.

Electrical System Requirements: Refer to Amperage Draw Chart and/or the **"Musco Control System Summary"** for electrical sizing.

Installation Requirements: Results assume ± 3% nominal voltage at line side of the driver and structures located within 3 feet (1m) of design locations.

SCALE IN FEET 1 : 20
0' 20' 40'

ENGINEERED DESIGN By: William Isiminger • File #247112C • 10-Sep-25

Pole location(s) ⊕ dimensions are relative to 0,0 reference point(s) ⊠

We Make It Happen.

Not to be reproduced in whole or part without the written consent of Musco Sports Lighting, LLC.
©1981, 2025 Musco Sports Lighting, LLC.

ILLUMINATION SUMMARY

Equipment List For Areas Shown

Structure				Fixtures				
QTY	STRUCTURE ID	SIZE	GRADE ELEVATION	ABOVE FIELD LEVEL	FIXTURE TYPE	QTY/POLE	THIS GRID	OTHER GRIDS
1	A1	60'	-	60'	TLC-LED-1200	1	1	0
				60'	TLC-LED-550	3*	2	1
				60'	TLC-LED-900	2	2	0
				15.5'	TLC-BT-575	1	1	0
1	A2	60'	-	60'	TLC-LED-1200	1	1	0
				60'	TLC-LED-550	1	0	1
				60'	TLC-LED-900	2	2	0
				15.5'	TLC-BT-575	1	1	0
2	B1-B2	70'	-	70'	TLC-LED-1500	4	4	0
				70'	TLC-LED-900	1	1	0
				60'	TLC-LED-550	1	0	1
				15.5'	TLC-BT-575	2	2	0
4	Totals					28	24	4

Above Field Level is height of fixtures above area shown

*This structure utilizes a back-to-back mounting configuration

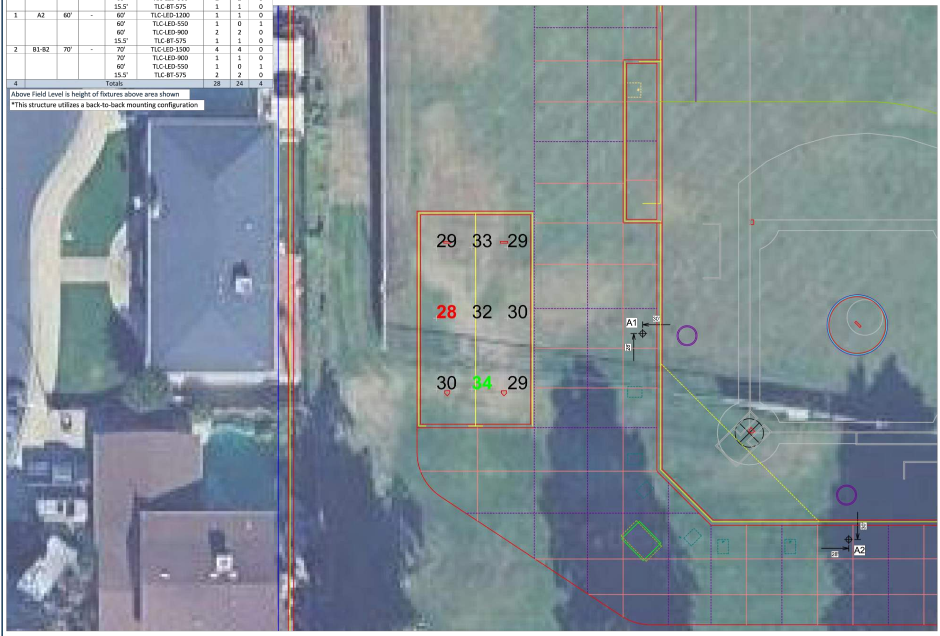

Lodi High School Softball And Baseball Field

Lodi,CA

Grid Summary

Name: **SB Batting Cage**
Size: 205'/220'/205' - basepath 60'
Spacing: 10.0' x 20.0'
Height: 3.0' above grade

Illumination Summary

MAINTAINED HORIZONTAL FOOTCANDLES

	Entire Grid
Scan Average:	**30.42**
Maximum:	34
Minimum:	28
Avg/Min:	1.07
Max/Min:	**1.18**
UG (adjacent pts):	1.15
CU:	0.02
No. of Points:	9
FIXTURE INFORMATION	
Applied Circuits:	A
No. of Fixtures:	**24**
Total Load:	23.29 kW

Guaranteed Performance: The ILLUMINATION described above is guaranteed per your Musco Warranty document.

Field Measurements: Individual field measurements may vary from computer-calculated predictions.

Electrical System Requirements: Refer to Amperage Draw Chart and/or the **"Musco Control System Summary"** for electrical sizing.

Installation Requirements: Results assume ± 3% nominal voltage at line side of the driver and structures located within 3 feet (1m) of design locations.

SCALE IN FEET 1 : 20
0' 20' 40'

ENGINEERED DESIGN By: William Isiminger • File #247112C • 10-Sep-25

Pole location(s) ⊕ dimensions are relative to 0,0 reference point(s) ⊠

We Make It Happen.

Not to be reproduced in whole or part without the written consent of Musco Sports Lighting, LLC.
©1981, 2025 Musco Sports Lighting, LLC.

ILLUMINATION SUMMARY

Equipment List For Areas Shown

Structure				Fixtures				
QTY	STRUCTURE ID	SIZE	GRADE ELEVATION	ABOVE FIELD LEVEL	FIXTURE TYPE	QTY/POLE	THIS GRID	OTHER GRIDS
2	A3-A4	70'	-	70'	TLC-LED-1200	3	3	0
				70'	TLC-LED-1500	1	1	0
				70'	TLC-LED-550	1	0	1
				15.5'	TLC-BT-575	1	1	0
1	B3	90'	-	90'	TLC-LED-1500	5	5	0
				70'	TLC-LED-550	2	0	2
				15.5'	TLC-BT-575	2	2	0
1	B4	80'	-	80'	TLC-LED-1500	4	4	0
				80'	TLC-LED-550	1/1*	0	2
				80'	TLC-LED-900	2	2	0
				15.5'	TLC-BT-575	2	2	0
1	C1	70'	-	70'	TLC-LED-1200	1	1	0
				70'	TLC-LED-900	2	2	0
				15.5'	TLC-BT-575	1	1	0
1	C2	70'	-	70'	TLC-LED-1200	1	1	0
				70'	TLC-LED-900	2	2	0
				60'	TLC-LED-550	2	0	2
				15.5'	TLC-BT-575	1	1	0
2	D1-D2	70'	-	70'	TLC-LED-1500	3	3	0
				70'	TLC-LED-900	1	1	0
				15.5'	TLC-BT-575	1	1	0
8	Totals					51	43	8

Above Field Level is height of fixtures above area shown

*This structure utilizes a back-to-back mounting configuration

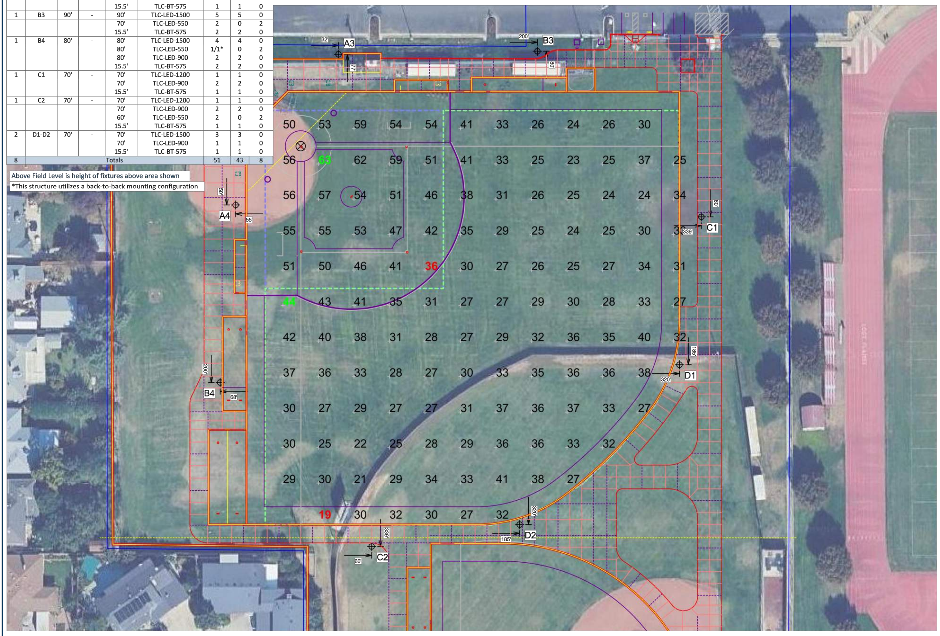

Lodi High School Softball And Baseball Field

Lodi,CA

Grid Summary

Name: **Baseball**
Size: Irregular 319'/371'/320'
Spacing: 30.0' x 30.0'
Height: 3.0' above grade

Illumination Summary

MAINTAINED HORIZONTAL FOOTCANDLES

	Infield	Outfield
Guaranteed Average:	**50**	**30**
Scan Average:	51.99	31.00
Maximum:	63	44
Minimum:	36	19
Avg/Min:	1.45	1.61
Guaranteed Max/Min:	**2**	**2.5**
Max/Min:	1.76	2.28
UG (adjacent pts):	1.19	1.58
CU:	0.72	
No. of Points:	25	105
FIXTURE INFORMATION		
Applied Circuits:	B	
No. of Fixtures:	**43**	
Total Load:	45.86 kW	

Guaranteed Performance: The ILLUMINATION described above is guaranteed per your Musco Warranty document.

Field Measurements: Individual field measurements may vary from computer-calculated predictions.

Electrical System Requirements: Refer to Amperage Draw Chart and/or the **"Musco Control System Summary"** for electrical sizing.

Installation Requirements: Results assume ± 3% nominal voltage at line side of the driver and structures located within 3 feet (1m) of design locations.

SCALE IN FEET 1 : 60
0' 60' 120'

ENGINEERED DESIGN By: William Isiminger • File #247112C • 10-Sep-25

Pole location(s) ⊕ dimensions are relative to 0,0 reference point(s) ⊠

We Make It Happen.

Not to be reproduced in whole or part without the written consent of Musco Sports Lighting, LLC.
©1981, 2025 Musco Sports Lighting, LLC.

ILLUMINATION SUMMARY

Equipment List For Areas Shown

Structure				Fixtures				
QTY	STRUCTURE ID	SIZE	GRADE ELEVATION	ABOVE FIELD LEVEL	FIXTURE TYPE	QTY/POLE	THIS GRID	OTHER GRIDS
2	A3-A4	70'	-	70'	TLC-LED-1200	3	3	0
				70'	TLC-LED-1500	1	1	0
				70'	TLC-LED-550	1	0	1
				15.5'	TLC-BT-575	1	1	0
1	B3	90'	-	90'	TLC-LED-1500	5	5	0
				70'	TLC-LED-550	2	0	2
				15.5'	TLC-BT-575	2	2	0
1	B4	80'	-	80'	TLC-LED-1500	4	4	0
				80'	TLC-LED-550	1/1*	0	2
				80'	TLC-LED-900	2	2	0
				15.5'	TLC-BT-575	2	2	0
1	C1	70'	-	70'	TLC-LED-1200	1	1	0
				70'	TLC-LED-900	2	2	0
				15.5'	TLC-BT-575	1	1	0
1	C2	70'	-	70'	TLC-LED-1200	1	1	0
				70'	TLC-LED-900	2	2	0
				60'	TLC-LED-550	2	0	2
				15.5'	TLC-BT-575	1	1	0
2	D1-D2	70'	-	70'	TLC-LED-1500	3	3	0
				70'	TLC-LED-900	1	1	0
				15.5'	TLC-BT-575	1	1	0
8	Totals					51	43	8

Above Field Level is height of fixtures above area shown

*This structure utilizes a back-to-back mounting configuration

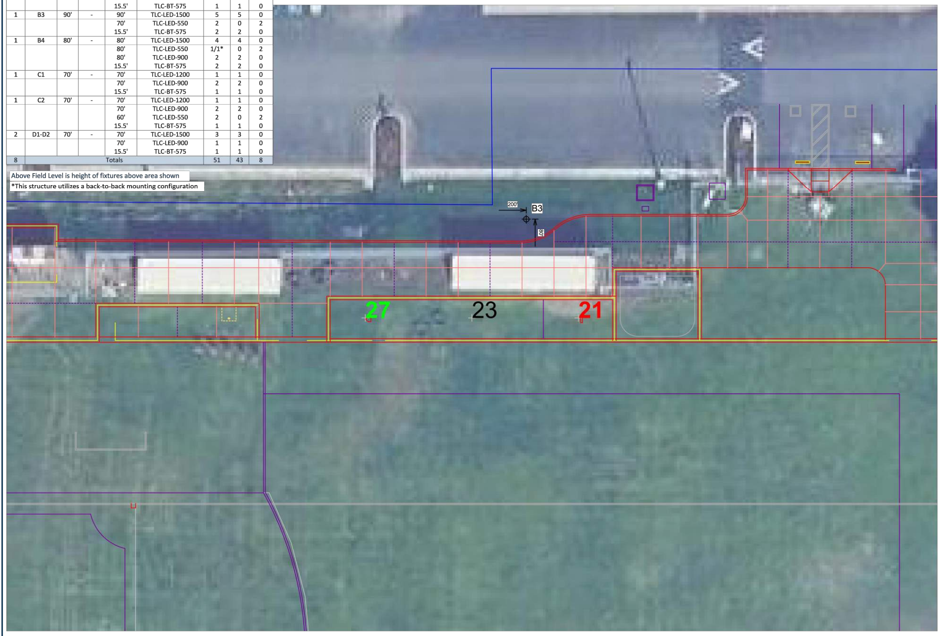

Lodi High School Softball And Baseball Field

Lodi,CA

Grid Summary

Name: **BB LF Bullpen**
Size: Irregular 319'/371'/320'
Spacing: 10.0' x 30.0'
Height: 3.0' above grade

Illumination Summary

MAINTAINED HORIZONTAL FOOTCANDLES

	Entire Grid
Scan Average:	**23.62**
Maximum:	27
Minimum:	21
Avg/Min:	1.11
Max/Min:	**1.25**
UG (adjacent pts):	1.16
CU:	0.00
No. of Points:	3
FIXTURE INFORMATION	
Applied Circuits:	B
No. of Fixtures:	**43**
Total Load:	45.86 kW

Guaranteed Performance: The ILLUMINATION described above is guaranteed per your Musco Warranty document.

Field Measurements: Individual field measurements may vary from computer-calculated predictions.

Electrical System Requirements: Refer to Amperage Draw Chart and/or the **"Musco Control System Summary"** for electrical sizing.

Installation Requirements: Results assume ± 3% nominal voltage at line side of the driver and structures located within 3 feet (1m) of design locations.

SCALE IN FEET 1 : 20
0' 20' 40'

ENGINEERED DESIGN By: William Isiminger • File #247112C • 10-Sep-25

Pole location(s) ⊕ dimensions are relative to 0,0 reference point(s) ⊠

We Make It Happen.

Not to be reproduced in whole or part without the written consent of Musco Sports Lighting, LLC.
©1981, 2025 Musco Sports Lighting, LLC.

ILLUMINATION SUMMARY

IDENTIFICATION STAMP
DIV. OF THE STATE ARCHITECT
APP: 02-123587 INC:
REVIEWED FOR
SS ☑ FLS ☑ ACS ☑
DATE: 01/16/2026

VERDE DESIGN
LANDSCAPE ARCHITECTURE
CIVIL ENGINEERING
SPORT PLANNING & DESIGN

1843 Iron Point Rd. Suite 140
Folsom, CA 95630
tel: 916.415.6554
fax: 916.415.6525
www.VerdeDesignInc.com

STAMP

NATHAN A. HEARN
No. E 23927
3-31-2026

Date Signed: 12/08/2025

CONSULTANT

capital engineering
RANCHO CORDOVA, CALIFORNIA

NH - RK/NO	240739.00
PM - DESIGN TEAM	PROJECT NO.

SHEET TITLE

MUSCO DESIGN
DRAWINGS

PROJECT NAME

LODI HIGH SCHOOL
ATHLETIC FIELD
IMPROVEMENTS

PROJECT ADDRESS

3 S PACIFIC AVE
LODI, CA
95242

SUBMITTAL	DATE
50% DSA SUBMITTAL	07/31/25
100% DSA SUBMITTAL	09/25/25
DSA BACKCHECK SUBMITTAL	12/17/25
DSA BACKCHECK SUBMITTAL	01/08/26

NO.	REVISIONS	DATE
△		
△		
△		
△		
△		
△		

DRAWN BY	CHECKED BY
RK	NH
DATE ISSUED 01/08/2026	SCALE

PROJ. NO.
2502700

SHEET NO.
E5.2

MUSCO DESIGN DRAWINGS

DRAWING NAME: \\capsac.lan\network\Project_Docs\2024\240739.00\1200 Drawings\1205 AutoCAD Project Files\E5.1-E5.4 MUSCO DESIGN DRAWINGS.dwg
PLOT DATE: 12-04-25 PLOTTED BY: Rustem.Kopbayev

Equipment List For Areas Shown

Structure				Fixtures				
QTY	STRUCTURE ID	SIZE	GRADE ELEVATION	ABOVE FIELD LEVEL	FIXTURE TYPE	QTY/POLE	THIS GRID	OTHER GRIDS
2	A3-A4	70'	-	70'	TLC-LED-1200	3	3	0
				70'	TLC-LED-1500	1	1	0
				70'	TLC-LED-550	1	0	1
				15.5'	TLC-BT-575	1	1	0
1	B3	90'	-	90'	TLC-LED-1500	5	5	0
				70'	TLC-LED-550	2	0	2
				15.5'	TLC-BT-575	2	2	0
1	B4	80'	-	80'	TLC-LED-1500	4	4	0
				80'	TLC-LED-550	1/1*	0	2
				80'	TLC-LED-900	2	2	0
				15.5'	TLC-BT-575	2	2	0
1	C1	70'	-	70'	TLC-LED-1200	1	1	0
				70'	TLC-LED-900	2	2	0
				15.5'	TLC-BT-575	1	1	0
1	C2	70'	-	70'	TLC-LED-1200	1	1	0
				70'	TLC-LED-900	2	2	0
				60'	TLC-LED-550	2	0	2
				15.5'	TLC-BT-575	1	1	0
2	D1-D2	70'	-	70'	TLC-LED-1500	3	3	0
				70'	TLC-LED-900	1	1	0
				15.5'	TLC-BT-575	1	1	0
8	Totals					51	43	8

Above Field Level is height of fixtures above area shown

*This structure utilizes a back-to-back mounting configuration

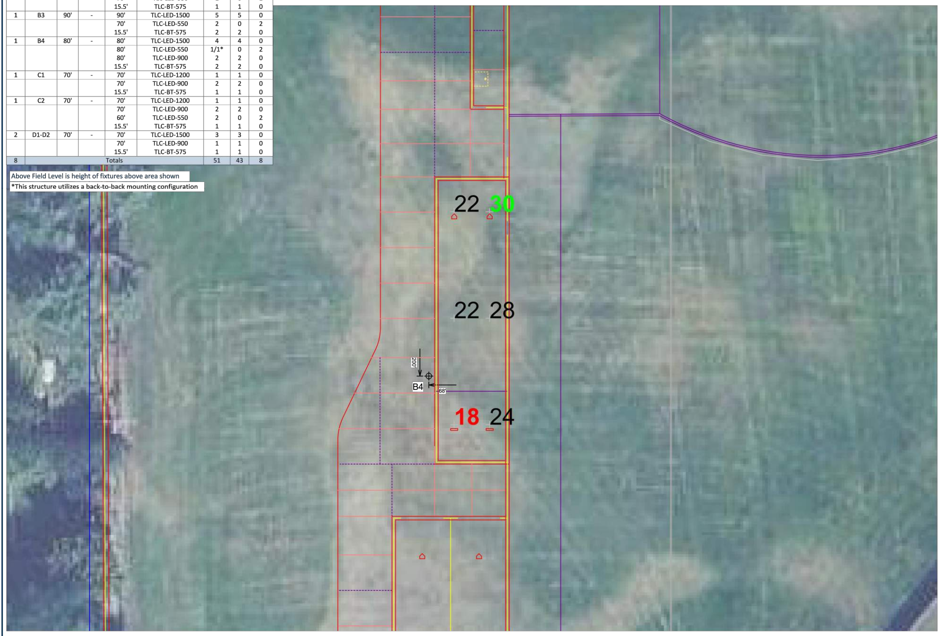

SCALE IN FEET 1 : 20
0' 20' 40'

ENGINEERED DESIGN By: William Isiminger • File #247112C • 10-Sep-25

Pole location(s) ⊕ dimensions are relative
to 0,0 reference point(s) ⊠

Lodi High School Softball And Baseball Field

Lodi,CA

Grid Summary

Name:	**BB RF Bullpen**
Size:	Irregular 319'/371'/320'
Spacing:	30.0' x 10.0'
Height:	3.0' above grade

Illumination Summary

	MAINTAINED HORIZONTAL FOOTCANDLES
	Entire Grid
Scan Average:	**24.11**
Maximum:	30
Minimum:	18
Avg/Min:	1.33
Max/Min:	**1.66**
UG (adjacent pts):	1.35
CU:	0.01
No. of Points:	6
FIXTURE INFORMATION	
Applied Circuits:	B
No. of Fixtures:	**43**
Total Load:	45.86 kW

Guaranteed Performance: The ILLUMINATION described above is guaranteed per your Musco Warranty document.

Field Measurements: Individual field measurements may vary from computer-calculated predictions.

Electrical System Requirements: Refer to Amperage Draw Chart and/or the **"Musco Control System Summary"** for electrical sizing.

Installation Requirements: Results assume ± 3% nominal voltage at line side of the driver and structures located within 3 feet (1m) of design locations.

musco
We Make It Happen.

Not to be reproduced in whole or part without the written consent of Musco Sports Lighting, LLC.
©1981, 2025 Musco Sports Lighting, LLC.

ILLUMINATION SUMMARY

Equipment List For Areas Shown

Structure				Fixtures				
QTY	STRUCTURE ID	SIZE	GRADE ELEVATION	ABOVE FIELD LEVEL	FIXTURE TYPE	QTY/POLE	THIS GRID	OTHER GRIDS
2	A3-A4	70'	-	70'	TLC-LED-1200	3	3	0
				70'	TLC-LED-1500	1	1	0
				70'	TLC-LED-550	1	0	1
				15.5'	TLC-BT-575	1	1	0
1	B3	90'	-	90'	TLC-LED-1500	5	5	0
				70'	TLC-LED-550	2	0	2
				15.5'	TLC-BT-575	2	2	0
1	B4	80'	-	80'	TLC-LED-1500	4	4	0
				80'	TLC-LED-550	1/1*	0	2
				80'	TLC-LED-900	2	2	0
				15.5'	TLC-BT-575	2	2	0
1	C1	70'	-	70'	TLC-LED-1200	1	1	0
				70'	TLC-LED-900	2	2	0
				15.5'	TLC-BT-575	1	1	0
1	C2	70'	-	70'	TLC-LED-1200	1	1	0
				70'	TLC-LED-900	2	2	0
				60'	TLC-LED-550	2	0	2
				15.5'	TLC-BT-575	1	1	0
2	D1-D2	70'	-	70'	TLC-LED-1500	3	3	0
				70'	TLC-LED-900	1	1	0
				15.5'	TLC-BT-575	1	1	0
8	Totals					51	43	8

Above Field Level is height of fixtures above area shown

*This structure utilizes a back-to-back mounting configuration

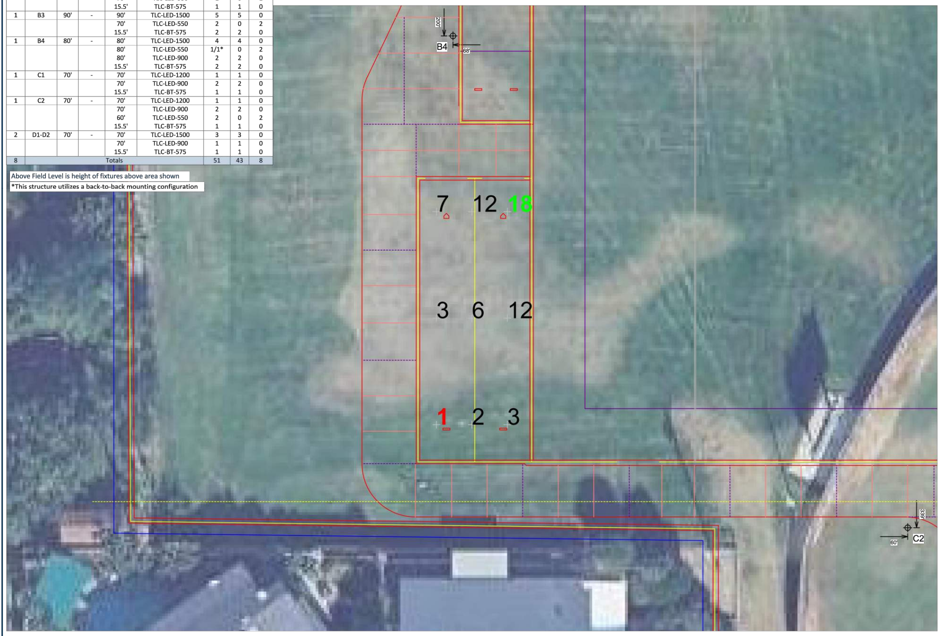

SCALE IN FEET 1 : 20
0' 20' 40'

ENGINEERED DESIGN By: William Isiminger • File #247112C • 10-Sep-25

Pole location(s) ⊕ dimensions are relative
to 0,0 reference point(s) ⊠

Lodi High School Softball And Baseball Field

Lodi,CA

Grid Summary

Name:	**BB Batting Cage**
Size:	Irregular 319'/371'/320'
Spacing:	30.0' x 10.0'
Height:	3.0' above grade

Illumination Summary

	MAINTAINED HORIZONTAL FOOTCANDLES
	Entire Grid
Scan Average:	**7.05**
Maximum:	18
Minimum:	1
Avg/Min:	8.70
Max/Min:	**22.42**
UG (adjacent pts):	4.22
CU:	0.00
No. of Points:	9
FIXTURE INFORMATION	
Applied Circuits:	B
No. of Fixtures:	**43**
Total Load:	45.86 kW

Guaranteed Performance: The ILLUMINATION described above is guaranteed per your Musco Warranty document.

Field Measurements: Individual field measurements may vary from computer-calculated predictions.

Electrical System Requirements: Refer to Amperage Draw Chart and/or the **"Musco Control System Summary"** for electrical sizing.

Installation Requirements: Results assume ± 3% nominal voltage at line side of the driver and structures located within 3 feet (1m) of design locations.

musco
We Make It Happen.

Not to be reproduced in whole or part without the written consent of Musco Sports Lighting, LLC.
©1981, 2025 Musco Sports Lighting, LLC.

ILLUMINATION SUMMARY

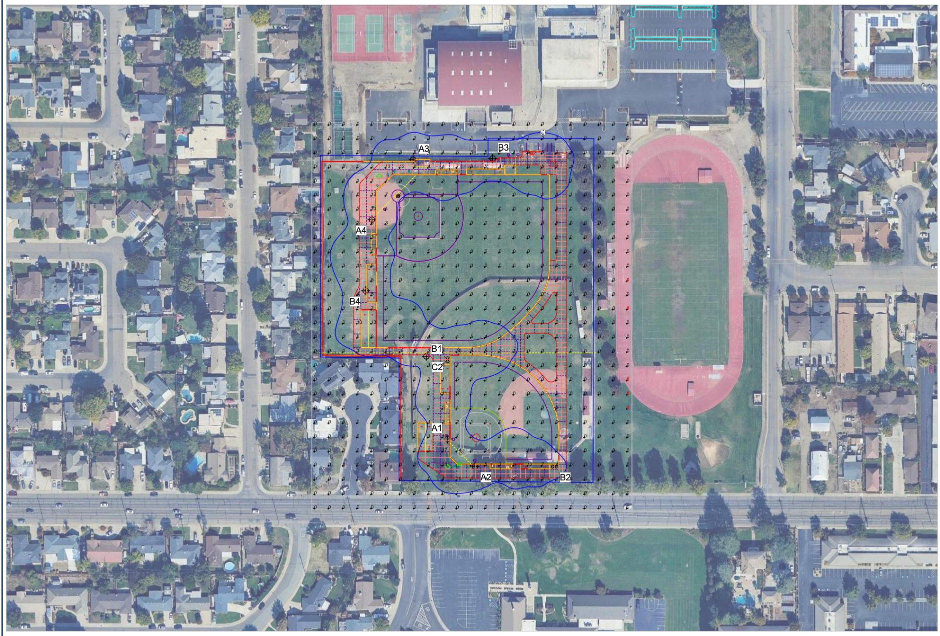

SCALE IN FEET 1 : 150
0' 150' 300'

ENGINEERED DESIGN By: William Isiminger • File #247112C • 10-Sep-25

Pole location(s) ⊕ dimensions are relative
to 0,0 reference point(s) ⊠

Lodi High School Softball And Baseball Field

Lodi,CA

Grid Summary

Name:	**Egress Blanket Grid**
Spacing:	30.0' x 30.0'
Height:	3.0' above grade

Illumination Summary

	MAINTAINED HORIZONTAL FOOTCANDLES
	Entire Grid
Scan Average:	**1.40**
Maximum:	26
Minimum:	0
No. of Points:	644
FIXTURE INFORMATION	
Applied Circuits:	D
No. of Fixtures:	**12**
Total Load:	6.32 kW

Guaranteed Performance: The ILLUMINATION described above is guaranteed per your Musco Warranty document.

Field Measurements: Individual field measurements may vary from computer-calculated predictions.

Electrical System Requirements: Refer to Amperage Draw Chart and/or the **"Musco Control System Summary"** for electrical sizing.

Installation Requirements: Results assume ± 3% nominal voltage at line side of the driver and structures located within 3 feet (1m) of design locations.

musco
We Make It Happen.

Not to be reproduced in whole or part without the written consent of Musco Sports Lighting, LLC.
©1981, 2025 Musco Sports Lighting, LLC.

ILLUMINATION SUMMARY

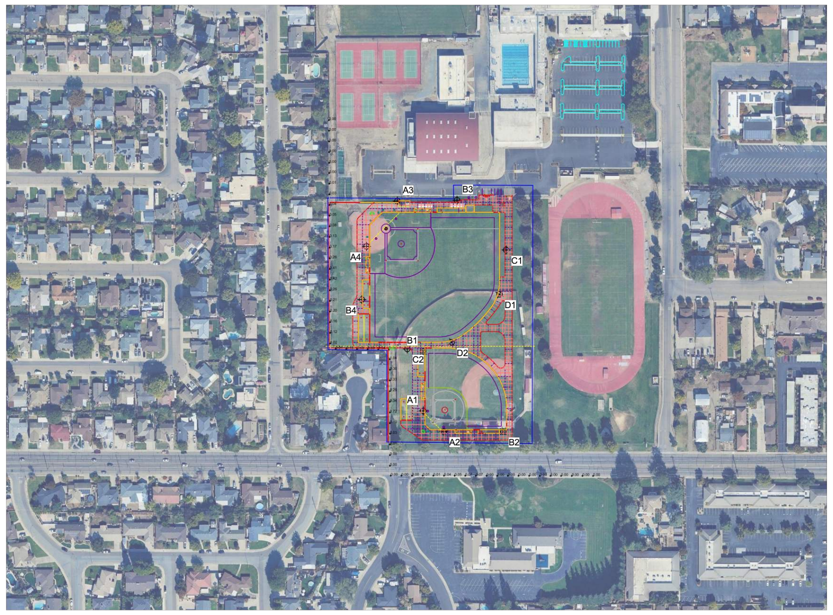

SCALE IN FEET 1 : 200
0' 200' 400'

ENGINEERED DESIGN By: William Isiminger • File #247112C • 10-Sep-25

Pole location(s) ⊕ dimensions are relative
to 0,0 reference point(s) ⊠

Lodi High School Softball And Baseball Field

Lodi,CA

Grid Summary

Name:	**Spill 3'**
Spacing:	30.0' x 10.0'
Height:	3.0' above grade

Illumination Summary

	MAINTAINED HORIZONTAL FOOTCANDLES
	Entire Grid
Scan Average:	**0.25**
Maximum:	6
Minimum:	0
No. of Points:	59
FIXTURE INFORMATION	
Applied Circuits:	A,B,C,D
No. of Fixtures:	**79**
Total Load:	75.47 kW

Guaranteed Performance: The ILLUMINATION described above is guaranteed per your Musco Warranty document.

Field Measurements: Individual field measurements may vary from computer-calculated predictions.

Electrical System Requirements: Refer to Amperage Draw Chart and/or the **"Musco Control System Summary"** for electrical sizing.

Installation Requirements: Results assume ± 3% nominal voltage at line side of the driver and structures located within 3 feet (1m) of design locations.

musco
We Make It Happen.

Not to be reproduced in whole or part without the written consent of Musco Sports Lighting, LLC.
©1981, 2025 Musco Sports Lighting, LLC.

ILLUMINATION SUMMARY

IDENTIFICATION STAMP
DIV. OF THE STATE ARCHITECT
APP: 02-123587 INC:
REVIEWED FOR
SS ☑ FLS ☑ ACS ☑
DATE: 01/16/2026

VERDE DESIGN
LANDSCAPE ARCHITECTURE
CIVIL ENGINEERING
SPORT PLANNING & DESIGN

1843 Iron Point Rd. Suite 140
Folsom, CA 95630
tel: 916.415.6554
fax: 916.415.6525
www.VerdeDesignInc.com

STAMP

NATHAN A. HEARN
No. E 23927
3-31-2026

Date Signed: 12/08/2025

CONSULTANT

capital engineering
RANCHO CORDOVA, CALIFORNIA

NH - RK/NO	240739.00
PM - DESIGN TEAM	PROJECT NO.

SHEET TITLE
MUSCO DESIGN
DRAWINGS

PROJECT NAME
LODI HIGH SCHOOL
ATHLETIC FIELD
IMPROVEMENTS

PROJECT ADDRESS
3 S PACIFIC AVE
LODI, CA
95242

SUBMITTAL	DATE
50% DSA SUBMITTAL	07/31/25
100% DSA SUBMITTAL	09/25/25
DSA BACKCHECK SUBMITTAL	12/17/25
DSA BACKCHECK SUBMITTAL	01/08/26

NO.	REVISIONS	DATE
△		
△		
△		
△		
△		
△		

DRAWN BY RK	CHECKED BY NH
DATE ISSUED 01/08/2026	SCALE

PROJ. NO.
2502700

SHEET NO.
E5.3

MUSCO DESIGN DRAWINGS

ALL IDEAS, DESIGNS, ARRANGEMENTS, AND PLANS INDICATED OR REPRESENTED BY THIS DRAWING ARE OWNED BY AND THE PROPERTY OF VERDE DESIGN, INC. AND WERE CREATED, EVOLVED, AND DEVELOPED FOR USE ON AND IN CONNECTION WITH THE SPECIFIED PROJECT. NONE OF SUCH IDEAS, DESIGNS, ARRANGEMENTS OR PLANS SHALL BE USED, REPRODUCED, OR PUBLISHED BY ANY METHOD, IN WHOLE OR IN PART, OR DISCLOSED TO ANY PERSON, FIRM, OR CORPORATION FOR ANY PURPOSE WHATSOEVER WITHOUT WRITTEN PERMISSION OF VERDE DESIGN, INC.

DRAWING NAME: \\capsac.lan\network\Project_Docs\2024\240739.00\1200 Drawings\1205 AutoCAD Project Files\E5.1-E5.4 MUSCO DESIGN DRAWINGS.dwg
PLOT DATE: 12-04-25 PLOTTED BY: Rustem.Kopbayev

ALL IDEAS, DESIGNS, ARRANGEMENTS, AND PLANS INDICATED OR REPRESENTED BY THIS DRAWING ARE OWNED BY AND THE PROPERTY OF VERDE DESIGN, INC. AND WERE CREATED, EVOLVED, AND DEVELOPED FOR USE ON AND IN CONNECTION WITH THE SPECIFIED PROJECT. NONE OF SUCH IDEAS, DESIGNS, ARRANGEMENTS OR PLANS SHALL BE USED, REPRODUCED, OR PUBLISHED BY ANY METHOD, IN WHOLE OR IN PART, OR DISCLOSED TO ANY PERSON, FIRM, OR CORPORATION FOR ANY PURPOSE WHATSOEVER WITHOUT WRITTEN PERMISSION OF VERDE DESIGN, INC.

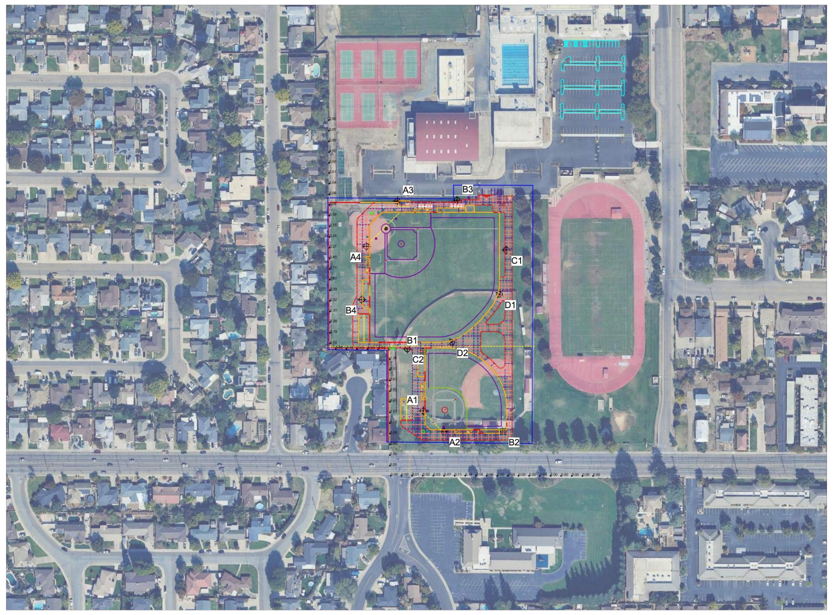

SCALE IN FEET 1 : 200

0' 200' 400'

ENGINEERED DESIGN By: William Isiminger • File #247112C • 10-Sep-25

Pole location(s) ⊕ dimensions are relative to 0,0 reference point(s) ⊠

Lodi High School Softball And Baseball Field

Lodi,CA

Grid Summary

Name:	**Spill 5'**
Spacing:	30.0' x 10.0'
Height:	5.0' above grade

Illumination Summary

	MAINTAINED MAX VERTICAL FOOTCANDLES
	Entire Grid
Scan Average:	**0.32**
Maximum:	7
Minimum:	0
No. of Points:	59
FIXTURE INFORMATION	
Applied Circuits:	A,B,C,D
No. of Fixtures:	**79**
Total Load:	75.47 kW

Guaranteed Performance: The ILLUMINATION described above is guaranteed per your Musco Warranty document.

Field Measurements: Individual field measurements may vary from computer-calculated predictions.

Electrical System Requirements: Refer to Amperage Draw Chart and/or the **"Musco Control System Summary"** for electrical sizing.

Installation Requirements: Results assume ± 3% nominal voltage at line side of the driver and structures located within 3 feet (1m) of design locations.

MUSCO. We Make It Happen.

Not to be reproduced in whole or part without the written consent of Musco Sports Lighting, LLC.
©1981, 2025 Musco Sports Lighting, LLC.

ILLUMINATION SUMMARY

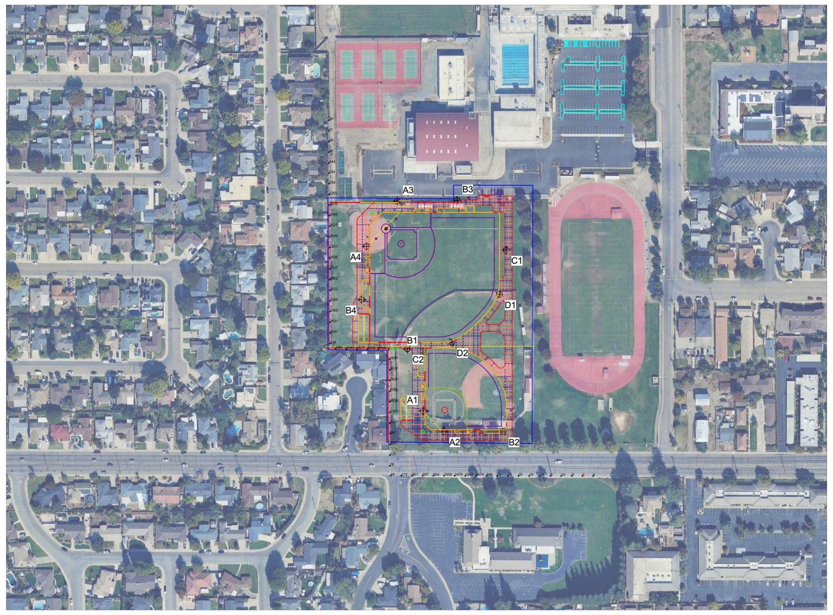

SCALE IN FEET 1 : 200

0' 200' 400'

ENGINEERED DESIGN By: William Isiminger • File #247112C • 10-Sep-25

Pole location(s) ⊕ dimensions are relative to 0,0 reference point(s) ⊠

Lodi High School Softball And Baseball Field

Lodi,CA

Grid Summary

Name:	**Spill 5'**
Spacing:	30.0' x 10.0'
Height:	5.0' above grade

Illumination Summary

	MAINTAINED MAX CANDELA (PER FIXTURE)
	Entire Grid
Scan Average:	**2413.05**
Maximum:	18315
Minimum:	6
No. of Points:	59
FIXTURE INFORMATION	
Applied Circuits:	A,B,C,D
No. of Fixtures:	**79**
Total Load:	75.47 kW

Guaranteed Performance: The ILLUMINATION described above is guaranteed per your Musco Warranty document.

Field Measurements: Individual field measurements may vary from computer-calculated predictions.

Electrical System Requirements: Refer to Amperage Draw Chart and/or the **"Musco Control System Summary"** for electrical sizing.

Installation Requirements: Results assume ± 3% nominal voltage at line side of the driver and structures located within 3 feet (1m) of design locations.

MUSCO. We Make It Happen.

Not to be reproduced in whole or part without the written consent of Musco Sports Lighting, LLC.
©1981, 2025 Musco Sports Lighting, LLC.

ILLUMINATION SUMMARY

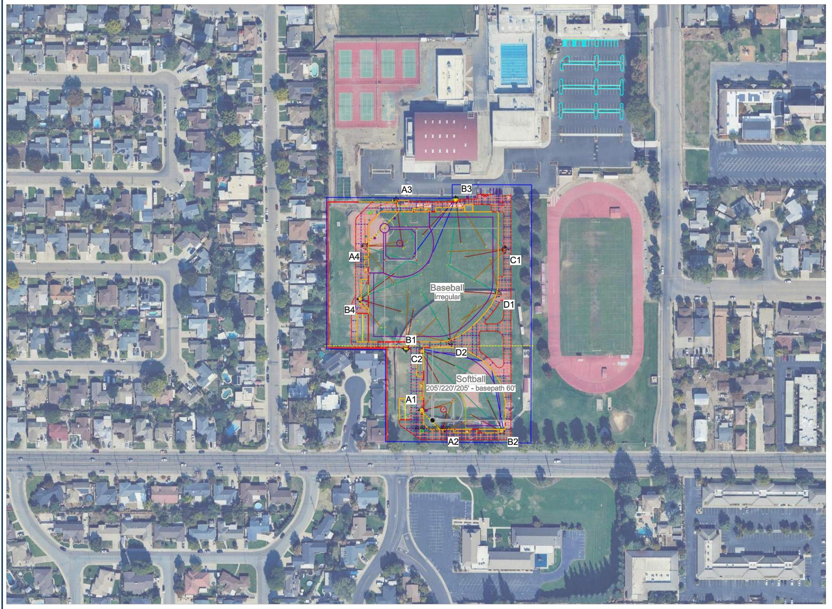

SCALE IN FEET 1 : 200

0' 200' 400'

ENGINEERED DESIGN By: William Isiminger • File #247112C • 10-Sep-25

Pole location(s) ⊕ dimensions are relative to 0,0 reference point(s) ⊠

Lodi High School Softball And Baseball Field

Lodi,CA

Equipment Layout

INCLUDES:
- Baseball
- Softball

Electrical System Requirements: Refer to Amperage Draw Chart and/or the **"Musco Control System Summary"** for electrical sizing.

Installation Requirements: Results assume ± 3% nominal voltage at line side of the driver and structures located within 3 feet (1m) of design locations.

Equipment List For Areas Shown

Structure				Fixtures		
QTY	STRUCTURE ID	SIZE	GLOBAL ELEVATION	ABOVE GLOBAL LEVEL	FIXTURE TYPE	QTY/POLE
1	A1	60'	-	60' 60' 60' 15.5'	TLC-LED-1200 TLC-LED-550 TLC-LED-900 TLC-BT-575	1 3* 2 1
1	A2	60'	-	60' 60' 60' 15.5'	TLC-LED-1200 TLC-LED-550 TLC-LED-900 TLC-BT-575	1 1 2 1
2	A3-A4	70'	-	70' 70' 15.5' 70'	TLC-LED-1500 TLC-LED-550 TLC-BT-575 TLC-LED-1200	1 1 1 3
2	B1-B2	70'	-	70' 70' 60' 15.5'	TLC-LED-1500 TLC-LED-900 TLC-LED-550 TLC-BT-575	4 1 1 2
1	B3	90'	-	90' 70' 15.5'	TLC-LED-1500 TLC-LED-550 TLC-BT-575	5 2 2
1	B4	80'	-	80' 80' 80' 15.5'	TLC-LED-1500 TLC-LED-550 TLC-LED-900 TLC-BT-575	4 1/1* 2 2
1	C1	70'	-	70' 70' 15.5'	TLC-LED-1200 TLC-LED-900 TLC-BT-575	1 2 1
1	C2	70'	-	70' 70' 60' 15.5'	TLC-LED-1200 TLC-LED-900 TLC-LED-550 TLC-BT-575	1 2 2 1
2	D1-D2	70'	-	70' 70' 15.5'	TLC-LED-1500 TLC-LED-900 TLC-BT-575	3 1 1
12	Totals					79

*This structure utilizes a back-to-back mounting configuration

Above Global Level is height of fixtures above design (0,0,0)

Single Fixture Amperage Draw Chart

Driver Specifications (.90 min power factor)	Line Amperage Per Fixture (max draw)						
Single Phase Voltage	208 (60)	220 (60)	240 (60)	277 (60)	347 (60)	380 (60)	480 (60)
TLC-LED-1500	8.4	7.9	7.3	6.3	5.0	4.6	3.6
TLC-LED-1200	6.9	6.5	6.0	5.2	4.2	3.8	3.0
TLC-LED-900	5.2	4.9	4.5	3.9	3.1	2.9	2.3
TLC-BT-575	3.3	3.2	2.9	2.5	2.0	1.8	1.5
TLC-LED-550	3.2	3.0	2.8	2.4	1.9	1.8	1.4

*Amp draw based on 100% fixture output, consult design specific datasheet for adjusted amperage draw chart

MUSCO. We Make It Happen.

Not to be reproduced in whole or part without the written consent of Musco Sports Lighting, LLC.
©1981, 2025 Musco Sports Lighting, LLC.

EQUIPMENT LAYOUT

IDENTIFICATION STAMP
DIV. OF THE STATE ARCHITECT
APP: 02-123587 INC:
REVIEWED FOR
SS ☑ FLS ☑ ACS ☑
DATE: 01/16/2026

VERDE DESIGN
LANDSCAPE ARCHITECTURE
CIVIL ENGINEERING
SPORT PLANNING & DESIGN

1843 Iron Point Rd. Suite 140
Folsom, CA 95630
tel: 916.415.6554
fax: 916.415.6525
www.VerdeDesignInc.com

STAMP

NATHAN A. HEARN
No. E 23927
3-31-2026
ELECTRICAL

Date Signed: 12/08/2025

CONSULTANT

capital engineering
RANCHO CORDOVA, CALIFORNIA

NH - RK/NO	240739.00
PM - DESIGN TEAM	PROJECT NO.

SHEET TITLE

MUSCO DESIGN DRAWINGS

PROJECT NAME

LODI HIGH SCHOOL ATHLETIC FIELD IMPROVEMENTS

PROJECT ADDRESS

3 S PACIFIC AVE
LODI, CA
95242

SUBMITTAL	DATE
50% DSA SUBMITTAL	07/31/25
100% DSA SUBMITTAL	09/25/25
DSA BACKCHECK SUBMITTAL	12/17/25
DSA BACKCHECK SUBMITTAL	01/08/26

NO.	REVISIONS	DATE
△		
△		
△		
△		
△		
△		

DRAWN BY RK	CHECKED BY NH
DATE ISSUED 01/08/2026	SCALE
PROJ. NO. 2502700	
SHEET NO. E5.4	

MUSCO DESIGN DRAWINGS

DRAWING NAME: \\capsac.lan\network\Project_Docs\2024\240739.00\1200 Drawings\1205 AutoCAD Project Files\E5.1-E5.4 MUSCO DESIGN DRAWINGS.dwg
PLOT DATE: 12-04-25 PLOTTED BY: Rustem.Kopbayev

STATE OF CALIFORNIA

Outdoor Lighting

CALIFORNIA ENERGY COMMISSION

CERTIFICATE OF COMPLIANCE	**NRCC-LTO-E**

This document is used to demonstrate compliance with requirements in 110.9, 130.0, 130.2, 140.7, and 141.0(b)2L for outdoor lighting scopes using the prescriptive path for nonresidential and hotel/motel occupancies. It is also used to document compliance with requirements in 160.5, 170.2(e)6, 180.1(a) and 180.2(b)4Bv for outdoor lighting scopes using the prescriptive path for multifamily and mixed-use occupancies. Multifamily includes dormitory and senior living facilities.

Project Name:	Lodi HS Ballfields	**Report Page:**	**(Page 1 of 7)**
Project Address:	3 S Pacific Ave	**Date Prepared:**	9/23/2025

A. GENERAL INFORMATION

01	Project Location (city)	Lodi	04	Total Illuminated Hardscape Area (ft²)	369995
02	Climate Zone	12			
03	Outdoor Lighting Zone per Title 24 Part 1 10.114 or as designated by Authority Having Jurisdiction (AHJ):				
☐	LZ-0: Very Low - Undeveloped Parkland	☒ LZ-2: Moderate - Urban Clusters	☐	LZ-4: High - Must be reviewed by CA Energy Commission for Approval	
☐	LZ-1: Low - Rural Areas	☐ LZ-3: Moderately High - Urban Areas			
05	Occupancy Types within Project				

- All Other Occupancies

B. PROJECT SCOPE

This table includes outdoor lighting systems that are within the scope of the permit application and are demonstrating compliance using the prescriptive path outlined in 140.7 / 170.2(e)6 or 141.0(b)2L / 180.2(b)4Bv for alterations.

My Project Consists of:

01	02	
☒ New Lighting System	Must Comply with Allowances from 140.7 / 170.2(e)6	
☐ Altered Lighting System	Is your alteration increasing the connected lighting load (Watts)? ○ Yes ○ No	
03	**04**	**05**
% of Existing Luminaires Being Altered[1]	Sum Total of Luminaires Being Added or Altered	Calculation Method
☐ < 10% ☐ >= 10% and < 50% ☐ >= 50%		

Please proceed to Table F. Outdoor Lighting Fixture Schedule to define the project's luminaires.

[1] *FOOTNOTES: % of Existing Luminaires Being Altered = (Sum Total of Luminaires Being Added or Altered / Existing Luminaires within the Scope of the Permit Application) x 100.*

STATE OF CALIFORNIA

Outdoor Lighting

CALIFORNIA ENERGY COMMISSION

CERTIFICATE OF COMPLIANCE			**NRCC-LTO-E**
Project Name:	Lodi HS Ballfields	**Report Page:**	**(Page 2 of 7)**
		Date Prepared:	9/23/2025

C. COMPLIANCE RESULTS

Results in this table are automatically calculated from data input and calculations in Tables F through N. Note: If any cell on this table says "COMPLIES with Exceptional Conditions" refer to Table D. Exceptional Conditions for guidance or see applicable Table referenced below.

Calculations of Total Allowed Lighting Power (Watts) 140.7 / 170.2(e)6 or 141.0(b)2L / 180.2(b)4Bv												**Compliance Results**			
01		02		03		04		05		06		07		08	09
General Hardscape Allowance 140.7(d)1 / 170.2(e)6 (See Table I)	+	Per Application 140.7(d)2 / 170.2(e)6 (See Table J)	+	Sales Frontage 140.7(d)2 (See Table K)	+	Ornamental 140.7(d)2 / 170.2(e)6 (See Table L)	+	Per Specific Area 140.7(d)2 / 170.2(e)6 (See Table M)	OR	Existing Power Allowance 141.0(b)2L / 180.2(b)4Bv (See Table N)	=	**Total Allowed** (Watts)	≥	**Total Actual** (Watts)	**07 must be >= 08**
7,641	+	---	+	---	+	---	+	---	OR	---	=	7,641	≥	7,388	COMPLIES

Shielding Compliance (See Table G for Details)	COMPLIES
Controls Compliance (See Table H for Details)	Not applicable

D. EXCEPTIONAL CONDITIONS

This table is auto-filled with uneditable comments because of selections made or data entered in tables throughout the form.

E. ADDITIONAL REMARKS

This table includes remarks made by the permit applicant to the Authority Having Jurisdiction.

STATE OF CALIFORNIA

Outdoor Lighting

CALIFORNIA ENERGY COMMISSION

CERTIFICATE OF COMPLIANCE			**NRCC-LTO-E**
Project Name:	Lodi HS Ballfields	**Report Page:**	**(Page 3 of 7)**
		Date Prepared:	9/23/2025

F. OUTDOOR LIGHTING FIXTURE SCHEDULE

For new or altered lighting systems demonstrating compliance with 140.7 / 170.2(e)6 all new luminaires being installed and any existing luminaires remaining or being moved within the spaces covered by the permit application are included in the Table below. For altered lighting systems using the Existing Power method per 141.0(b)2L only new luminaires being installed and replacement luminaires being installed as part of the project scope are included (ie, existing luminaires remaining or existing luminaires being moved are not included). Outdoor lighting attached to multifamily buildings and controlled from the inside of a dwelling unit are included in Table H. and are not included here. All other multifamily outdoor lighting is included here.

Designed Wattage:

01	02		03	04	05	06	07	08	09	10	
Name or Item Tag	Complete Luminaire Description		Watts per luminaire[1, 2]	How is Wattage determined	Total Number Luminaires[2]	Luminaire Status[3]	Excluded per 140.7(a) / 170.2(e)6A	Design Watts	Cutoff Req. > 6,200 initial lumen output 130.2(b) / 160.5(c)1[4]	Field Inspector	
										Pass	Fail
C1	C1	☐ Linear	24	Mfr. Spec	16	New	☐	384	NA: < 6200 lumens	☐	☐
F1	F1	☐ Linear	34	Mfr. Spec	3	New	☒	---	NA: < 6200 lumens	☐	☐
S1	S1	☐ Linear	85	Mfr. Spec	8	New	☐	680	Provided	☐	☐
TLC-LED-550	TLC-LED-550	☐ Linear	527	Mfr. Spec	12	New	☐	6,324	NA: < 6200 lumens	☐	☐
							Total Design Watts:	7388			

* NOTES: Selections with a * require a note in the space below explaining how compliance is achieved.
EX: Luminaire is lighting a statue; EXCEPTION 2 to 130.2(b)

[1] *FOOTNOTES: Authority Having Jurisdiction may ask for Luminaire cut sheets to confirm wattage used for compliance per 130.0(c) / 160.5(b)*

[2] *For linear luminaires, wattage should be indicated as W/lf instead of Watts/luminaire. Total linear feet should be indicated in column 05 instead of number of luminaires.*

[3] *Select "New" for new luminaires in a new outdoor lighting project, or for added luminaires in an alteration. Select "Altered" for replacement luminaires in an alteration. Select "Existing to Remain" for existing luminaires within the project scope that are not being altered and are remaining. Select "Existing Reinstalled" for existing luminaires which are being removed and reinstalled as part of the project scope.*

[4] *Compliance with mandatory shielding requirements is required for luminaires with initial lumen output >= 6,200 unless exempted by 130.2(b)/ 160.5(c)*

STATE OF CALIFORNIA

Outdoor Lighting

CALIFORNIA ENERGY COMMISSION

CERTIFICATE OF COMPLIANCE			**NRCC-LTO-E**
Project Name:	Lodi HS Ballfields	**Report Page:**	**(Page 4 of 7)**
		Date Prepared:	9/23/2025

G. SHIELDING REQUIREMENTS (BUG)

This table includes fixtures of >=6,200 initial lumens indicated on Table F as needing to comply with Shielding Requirements. Maximum lumens can be found in Title 24, Part 11, Section 5.106.8.

01	02	03	04	05	06	07	08	09	10	11	12	
Name or Item Tag	Complete Luminaire Description	Backlight Rating[2]			Uplight Rating[2]			Glare Rating (Lumens)[2]			Field Inspector	
		Mounting Height[1]	Max Allowable Backlight Rating[3]	Backlight Rating Per Design	Lighting type	Max Allowable Uplight Rating[3]	Uplight Rating Per Design	Mounting Height[1]	Max Allowable Glare Rating[3]	Glare Rating Per Design	Pass	Fail
S1	S1	2 MH from property line	No Limit	B4	All other outdoor lighting, including decorative	U2	U0	> 2 MH from property line	G2	G3	☐	☐

[1] *FOOTNOTES: Mounting Height is labeled MH in this table.*

[2] *Authority Having Jurisdiction may ask for Luminaire cut sheets or other documentation to confirm luminaire type, uplight ratings and glare ratings used for compliance per 130.2(b)/ 160.5(c)*

[3] *BUG ratings with a lower number than the 'Max Allowable' are compliant. Ex. If Max Allowable is Bug Rating B4, then B0, B1, B2 and B3 are all compliant.*

H. OUTDOOR LIGHTING CONTROLS

This table demonstrates compliance with controls requirements for all new or altered luminaires installed as part of the permit application. For alteration projects, luminaires which are existing to remain (ie untouched) and luminaires which are removed and reinstalled (wiring only) do not need to be included in this table even if they are within the spaces covered by the permit application.
Outdoor lighting for nonresidential buildings, parking garages and common service areas in multifamily buildings must be documented separately from outdoor lighting attached to multifamily buildings and controlled from the inside of a dwelling unit

Mandatory Controls for Nonresidential Occupancies, Parking Garages & Common Areas in Multifamily Buildings

01	02	03	04	05	
Area Description	Shut-Off 130.2(c)1 / 160.5(c)	Auto-Schedule 130.2(c)2 / 160.5(c)	Motion Sensor 130.2(c)3 / 160.5(c)	Field Inspector	
				Pass	Fail

[1] *FOOTNOTE: Text has been abbreviated, please refer to Table 160.5-A to confirm compliance with the specific light source technologies listed.*

[2] *Authority having jurisdiction may ask for cutsheets or other documentation to confirm compliance of light source.*

[3] *Recessed luminaires marked for use in fire-rated installations, and recessed luminaires installed in non-insulated ceilings are excepted from ii and iii.*

STATE OF CALIFORNIA

Outdoor Lighting

CALIFORNIA ENERGY COMMISSION

CERTIFICATE OF COMPLIANCE			**NRCC-LTO-E**
Project Name:	Lodi HS Ballfields	**Report Page:**	**(Page 5 of 7)**
		Date Prepared:	9/23/2025

I. LIGHTING POWER ALLOWANCE (per 140.7 / 170.2(e))

This table includes areas using allowance calculations per 140.7 / 170.2(e). General Hardscape Allowance is per Table 140.7-A/Table 170.2-R while "Use it or lose it" Allowances are per Table 140.7-B /Table 170.2-S. Indicate which allowances are being used to expand sections for user input. Luminaires that qualify for one of the "Use it or lose it" allowances shall not qualify for another "Use it or lose it" allowance.
Outdoor lighting attached to multifamily buildings and controlled from the inside of a dwelling unit are included in Table H. and are not included here. All other multifamily outdoor lighting is included here.

01				
	"Use it or lose it" Allowance (select all that apply) (select all that apply)			
☒ General Hardscape Allowance Table I (below)	☐ Per Application Table J	☐ Sales Frontage Table K	☐ Ornamental Table L	☐ Per Specific Area Table M

Calculated General Hardscape Lighting Power Allowance per Table 140.7-A for Nonresidential & Hotel/Motel

02	03	04	05	06	07	08	09
Area Description	Area Wattage Allowance (AWA)			Linear Wattage Allowance (LWA)			Total General AWA + LWA (Watts)
	Illuminated Area (ft²)	Allowed Density (W/ft²)	Area Allowance (Watts)	Perimeter Length (lf)	Allowed Density (W/lf)	Linear Allowance (Watts)	
Lodi HS Ballfields	369995	0.019	7029.9	2739	0.2	410.8	7441
						Initial Wattage Allowance for Entire Site (Watts):	200
						Instances of Initial Wattage Allowance (LZ 0 only)[1]	
						Total General Hardscape Allowance (Watts):	7641

J. LIGHTING ALLOWANCE: PER APPLICATION

This section does not apply to this project.

K. LIGHTING ALLOWANCE: SALES FRONTAGE

This section does not apply to this project.

L. LIGHTING ALLOWANCE: ORNAMENTAL

This section does not apply to this project.

STATE OF CALIFORNIA

Outdoor Lighting

CALIFORNIA ENERGY COMMISSION

CERTIFICATE OF COMPLIANCE			**NRCC-LTO-E**
Project Name:	Lodi HS Ballfields	**Report Page:**	**(Page 6 of 7)**
		Date Prepared:	9/23/2025

M. LIGHTING ALLOWANCE: PER SPECIFIC AREA

This section does not apply to this project.

N. EXISTING CONDITIONS POWER ALLOWANCE (alterations only)

This section does not apply to this project.

O. DECLARATION OF REQUIRED CERTIFICATES OF INSTALLATION

Selections have been made based on information provided in this document. If any selection has been changed by permit applicant, an explanation should be included in Table E. Additional Remarks. These documents must be provided to the building inspector during construction and can be found online

Form/Title
NRCI-LTO-E - Must be submitted for all buildings

P. DECLARATION OF REQUIRED CERTIFICATES OF ACCEPTANCE

There are no NRCA forms required for this project.

STATE OF CALIFORNIA

Outdoor Lighting

CALIFORNIA ENERGY COMMISSION

CERTIFICATE OF COMPLIANCE			**NRCC-LTO-E**
Project Name:	Lodi HS Ballfields	**Report Page:**	**(Page 7 of 7)**
Project Address:	3 S Pacific Ave	**Date Prepared:**	9/23/2025

DOCUMENTATION AUTHOR'S DECLARATION STATEMENT

I certify that this Certificate of Compliance documentation is accurate and complete.

Documentation Author Name: Rustem Kopbayev	Documentation Author Signature: Rustem
Company: Capital Engineering Consultants Inc.	Signature Date: 2025-09-23
Address: 11020 Sun Center Drive Suite 100	CEA/ HERS Certification Identification (if applicable):
City/State/Zip: Rancho Cordova CA 95670	Phone: 916-851-3575

RESPONSIBLE PERSON'S DECLARATION STATEMENT

I certify the following under penalty of perjury, under the laws of the State of California:

1. The information provided on this Certificate of Compliance is true and correct.
2. I am eligible under Division 3 of the Business and Professions Code to accept responsibility for the building design or system design identified on this Certificate of Compliance (responsible designer)
3. The energy features and performance specifications, materials, components, and manufactured devices for the building design or system design identified on this Certificate of Compliance conform to the requirements of Title 24, Part 1 and Part 6 of the California Code of Regulations.
4. The building design features or system design features identified on this Certificate of Compliance are consistent with the information provided on other applicable compliance documents, worksheets, calculations, plans and specifications submitted to the enforcement agency for approval with this building permit application.
5. I will ensure that a completed signed copy of this Certificate of Compliance shall be made available with the building permit(s) issued for the building, and made available to the enforcement agency for all applicable inspections. I understand that a completed signed copy of this Certificate of Compliance is required to be included with the documentation the builder provides to the building owner at occupancy.

Responsible Designer Name: Nathan Hearn	Responsible Designer Signature: Nathan A. Hearn
Company: Capital Engineering Consultants Inc.	Date Signed: 2025-09-23
Address: 11020 Sun Center Drive, Suite 100	License: E23927
City/State/Zip: Rancho Cordova CA 95670	Phone: 916-851-3568

IDENTIFICATION STAMP
DIV. OF THE STATE ARCHITECT
APP: 02-123587 INC:
REVIEWED FOR
SS ☑ FLS ☑ ACS ☑
DATE: 01/16/2026

VERDE DESIGN
LANDSCAPE ARCHITECTURE
CIVIL ENGINEERING
SPORT PLANNING & DESIGN
1843 Iron Point Rd. Suite 140
Folsom, CA 95630
tel: 916.415.6554
fax: 916.415.6525
www.VerdeDesignInc.com

STAMP

NATHAN A. HEARN
No. E 23927
3-31-2026
Date Signed: 12/08/2025

CONSULTANT

capital engineering
RANCHO CORDOVA, CALIFORNIA
NH - RK/NO 240739.00
PM - DESIGN TEAM PROJECT NO.

SHEET TITLE
TITLE 24
LTO FORMS

PROJECT NAME
LODI HIGH SCHOOL
ATHLETIC FIELD
IMPROVEMENTS

PROJECT ADDRESS
3 S PACIFIC AVE
LODI, CA
95242

SUBMITTAL	DATE
50% DSA SUBMITTAL	07/31/25
100% DSA SUBMITTAL	09/25/25
DSA BACKCHECK SUBMITTAL	12/17/25
DSA BACKCHECK SUBMITTAL	01/08/26

NO.	REVISIONS	DATE
△		
△		
△		
△		
△		
△		

DRAWN BY RK	CHECKED BY NH
DATE ISSUED 01/08/2026	SCALE

PROJ. NO.
2502700

SHEET NO.
E6.1

TITLE 24 LTO FORMS

ALL IDEAS, DESIGNS, ARRANGEMENTS, AND PLANS INDICATED OR REPRESENTED BY THIS DRAWING ARE OWNED BY AND THE PROPERTY OF VERDE DESIGN, INC. AND WERE CREATED, EVOLVED, AND DEVELOPED FOR USE ON AND IN CONNECTION WITH THE SPECIFIED PROJECT. NONE OF SUCH IDEAS, DESIGNS, ARRANGEMENTS OR PLANS SHALL BE USED, REPRODUCED, OR PUBLISHED BY ANY METHOD, IN WHOLE OR IN PART, OR DISCLOSED TO ANY PERSON, FIRM, OR CORPORATION FOR ANY PURPOSE WHATSOEVER WITHOUT WRITTEN PERMISSION OF VERDE DESIGN, INC.

DRAWING NAME: \\capsac.lan\network\Project_Docs\2024\240739.00\1200 Drawings\1205 AutoCAD Project Files\E6.1 TITLE 24 LTO FORMS.dwg
PLOT DATE: 12-04-25 PLOTTED BY: Rustem.Kopbayev

GENERAL NOTES:

APPLICABLE BUILDING CODE

All construction and workmanship shall conform to the 2022 California Building Code, California Code of Regulations – Title 24, Parts 1 & 2.

This pole and foundation standard has been designed for lateral loads on the completed structure as follows:

Wind Design Data:
- Vult = 93 MPH (Exposure C); Vasd = 72 MPH (Exposure C)
- Risk Category = II
- See Pole Foundation Schedule for maximum pole wind forces.

Seismic Design Data:
- I_e = 1.0
- Risk Category = II (Self Supporting Poles)
- S_s = 0.626
- S_1 = 0.260
- Site Class = D
- S_{DS} = 0.542
- S_{D1} = 0.541
- Seismic Design Category = D
- Basic Seismic–Force–Resisting System = Non–Building Structure, not similar to buildings
- Cs = 0.193 (60A); 0.216 (60B); 0.154 (70A); 0.179 (70C); 0.177 (80B); 0.141 (90A). (STRENGTH LEVEL)
- R = 1.5
- Ω = 1.5
- Analysis Procedure = Equivalent Lateral Force Procedure
- See Pole Foundation Schedule for maximum pole seismic forces.

GENERAL CONSTRUCTION

These notes shall be used in conjunction with the plans and any discrepancies shall be brought to the attention of the Registered Design Professional (RDP) in Responsible Charge.

Contractor must check all dimensions, clearances and job conditions before starting work. The RDP in Responsible Charge shall be notified immediately of any discrepancies or possible deficiencies.

The drawings and specifications represent the finished structure. All bracing, temporary supports, shoring, etc., is the sole responsibility of the Contractor. Observation visits to the job site by the RDP in Responsible Charge do not include inspection of construction procedures. The Contractor is solely responsible for all construction methods and for safety conditions at the worksite. These visits by RDP in Responsible Charge shall not be construed as continuous and detailed inspections.

Design, material, equipment, and products other than those described below or indicated on the drawings may be considered for use, provided prior approval is obtained from the School District, the RDP in Responsible Charge, and DSA.

All changes to the approved plans after a contract for construction has been awarded, affecting structural, access or life–safety portions of the project, shall be made by means of construction change documents (CCD) approved by DSA, as required by Section 4–338, Part 1, Title 24, CCR. All CCD shall be prepared and signed by the RDP in general Responsible Charge.

Substitutions shall be considered as a CCD and shall be approved by DSA prior to fabrication or use.

A Class 1 or Class 2 Project Inspector employed by the School District (Owner) and approved by DSA shall provide continuous inspection of the work, the duties of the Inspector are defined In Section 4–342, Part 1, Title 24, CCR.

All Tests And Inspections shall be performed by an Independent lab employed by the School District and approved by DSA.

Reference pole location on the Architectural, Structural, and/or Electrical drawings for actual pole placement and site location. Pole shall be located 5'–0" min. from adjacent structures below 50'–0" A.G.L., unless noted otherwise.

LIGHT POLE FOUNDATIONS

Reference geotechnical report prepared by Raney Geotechnical Inc., Dated May 20, 2025; File No. 5812–002.00P.

Allowable Vertical soil Capacity – 4,000 PSF (End Bearing) OR 300 PSF (Skin Friction). Ignore upper 1 ft of soil.

Allowable Lateral Bearing capacity: 300 PSF/FT. Ignore upper 1 ft of soil..

A representative of Raney Geotechnical Inc. should be available at the time of the foundation installation to verify the soil design parameters and to provide assistance if any problems arise in foundation installation.

The Contractor must familiarize himself with the complete geotechnical report, and borings and contact the above firm to understand the soil conditions and the possibility of ground water pumping and excavation stabilization or bracing during the foundation installation and placement of concrete.

Soil formations that will require special design considerations or excavation procedures may exist. Pole foundations may need to be reanalyzed according to the soil conditions that exist.

If any discrepancies or inconsistencies arise, notify the RDP in Responsible Charge of such discrepancies.

All piers and concrete must bear on and against firm undisturbed soil as determined by the Geotechnical Engineer.

Place plywood collar around perimeter at the top of foundation excavation to prevent soil from entering pier.

All excavations must be free of loose soil, and debris prior to foundation installation and placement of concrete. Casing or drilling slurry may be required if caving occurs. Review and approval of the Geotechnical Engineer and DSA is required.

All excavations must be free of water or concrete shall be placed by the Tremie Method in accordance with ACI standard 336. Concrete placed by the Tremie Method shall have a minimum ultimate strength of 1,000 PSI greater than required under "Concrete Cast–In–Place' and a maximum slump of 8".

CONCRETE (CAST–IN–PLACE)

Concrete pier foundations with steel reinforcement shall attain a minimum ultimate compressive strength at 28 day test of 3,000 psi. Batch plant inspection not required.

All concrete shall attain a minimum strength of 2,500 psi prior to steel pole erection.

Use Type II/V Portland cement or as directed by the Geotechnical Engineer.

Portland Cement ASTM C–150.

Aggregate ASTM C–33. 1" maximum aggregate size. ⅜" max agg. size not permitted.

Mix in conformance with ASTM C–94, ACI 318 SECTIONS 19.3 and 26.4.

Place concrete immediately after completion of excavation and inspection by the Geotechnical Engineer and the DSA Inspector. Under no circumstances shall piers be allowed to remain open for more than 12 hours without the approval of the Geotechnical Engineer. Excavations shall be covered and protected until filled with concrete.

Concrete shall be placed in one continuous operation (no construction joint) with special equipment to assure a maximum freefall of 5 ft and to prevent concrete from striking the sides of the excavation. Freefall of concrete is unacceptable through water or drilling slurry.

Vibrate concrete full depth, except for concrete with slump greater than 6", then vibrate only upper 10'–0". Concrete placed under water shall have a slump of 6"–8".

STEEL POLE

Steel pole sections conform to the California Code of Regulations T.24, Part 2, Chapter 22A.

All steel conforms to referenced ASTM specifications. (See Pole Data Table for each pole type).

All weldment conforms with AWS D1.1–15 specification for GMAW fillet utilizing E70S–X filler metal or SAW fillet utilizing F7XX–EXXX or F8XX–EXXX filler metal.
GMAW procedure conforms to AWS A5.18.
SAW procedure conforms to AWS A5.23.

Longitudinal seam welds for pole sections shall have 60% minimum penetration; Except longitudinal seam welds on the female section of telescopic field splices shall be full penetration groove welds for a length equal to the minimum splice length plus 6 inches. See drawing number MD1 for seam weld details.

Pole sections hot dipped galvanized to ASTM A123 latest standards.

All miscellaneous structural steel items conform to AISC 360–16.

Steel pole sections shall be assembled in the field by attaching two 1.5 ton "come alongs" to jacking ears, using full effort on each simultaneously, to ensure minimum overlaps as indicated on the "MS" sheet(s) and detail G/MD1.

PRECAST BASE

The precast concrete base conforms to California Code of Regulations, T.24, part 2, Chapter 19A and to Building Code Requirements for Reinforced Concrete, ACI 318–19. Precast bases are an ICC approved product under ESR–3765.

See detail "A" on "MS" sheet(s) for material strengths and specifications.

TESTING AND INSPECTION

Testing and inspection in accordance with Title 24, Part 1 & Part 2 & project DSA 103 form.

EXCAVATIONS & FOUNDATIONS:
Inspection of cast–in–place deep foundations – 1705A.8 & Table 1705A.8

CONCRETE MATERIALS: 1903A.1
Portland cement – 1910A.1
Concrete aggregates – 1903A.5
Reinforcing bars – 1910A.2 & DSA IR 17–10
Prestressing steel and anchorages – 1910A.3

CONCRETE QUALITY:
Proportions of concrete – Reference ACI 318 Section 26.4.3.1 Through 26.4.4.1.
Strength tests of concrete – 1905A.1.17 and ACI 318 Section 26.12 & 26.5.3.2.

CONCRETE INSPECTION: 1705A.3 & Table 1705A.3
Job site – Reference ACI 318 Section 26.5.1,26.5.2.1(a) & (b),26.6.1.2(d), 26.11.1.1(a).
Batch Plant Inspection Not Required – 1705A.3.3.2
Prestressed concrete – 1704A.2.5, 1705A.3.4

STEEL MATERIALS:
Structural steel – 2202A.1 & 2205A.1
Cold formed steel – 2210A.1
Identification – 2202A.1
High strength bolt identification – table 1705A.2.1 & DSA IR 17–9

STEEL QUALITY:
Tests of structural steel & cold formed steel – 2202A.1
Tests of high strength bolts, nuts, & washers – 2213A.1 & DSA IR 17–8

STRUCTURAL STEEL INSPECTIONS: Table 1705A.2.1
Shop fabrication inspection – 1704A2.5
Welding – 1705A.2.5, DSA IR 17–3 and AWS D1.1.
High strength bolt installation – Table 1705A.2.1 & DSA IR 17–9
(Including Skidmore–Wilhelm bolt tension pre–installation verification testing)
(NOTE: ALL WELDING SHALL BE CONTINUOUSLY INSPECTED BY AN AWS CWI CERTIFIED INSPECTOR APPROVED BY DSA)

These plans are for construction approval. An application number and approval of these drawings by the Division of The State Architect of California must be secured to build from these plans.

INDEX OF SHEETS

MT1	NOTES, FOUNDATION DETAIL
MS1	60B POLE DETAILS
MS2	60A POLE DETAILS
MS3	70A POLE DETAILS
MS4	70C POLE DETAILS
MS5	90A POLE DETAILS
MS6	80B POLE DETAILS
MD1	ATTACHMENT DETAILS
MD2	ATTACHMENT DETAILS
MD3	ATTACHMENT DETAILS

IDENTIFICATION STAMP
DIV. OF THE STATE ARCHITECT
APP: 02-123587 INC:
REVIEWED FOR
SS ☑ FLS ☑ ACS ☑
DATE: 01/16/2026

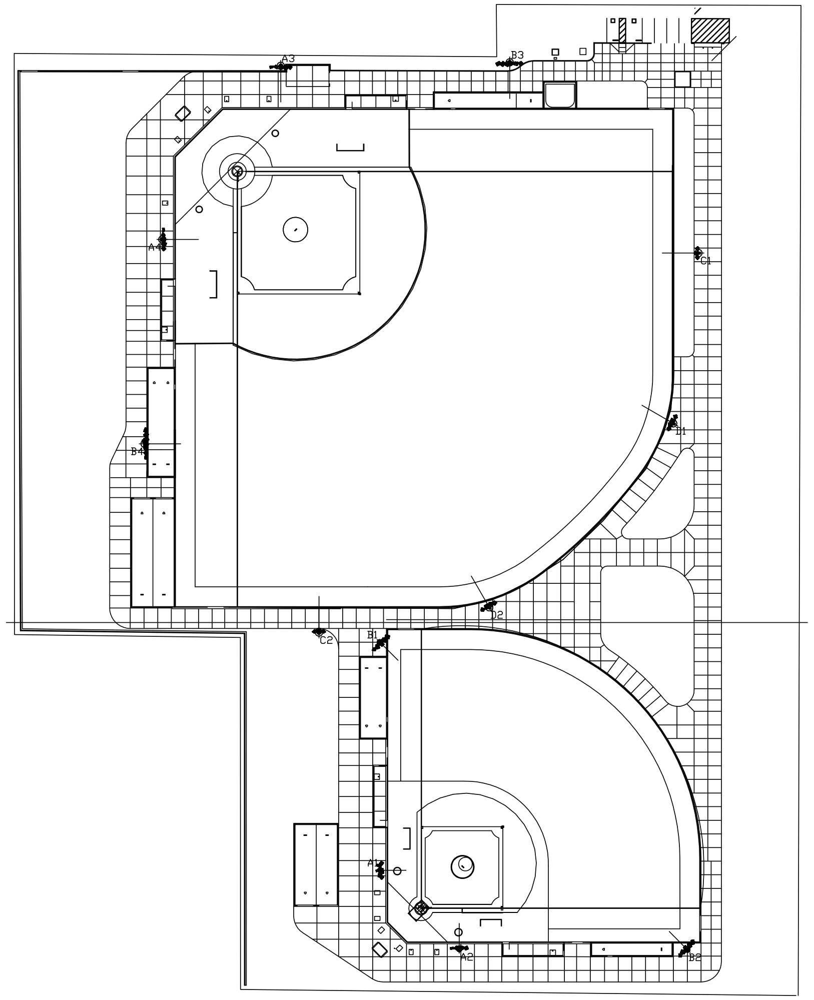

POLE ORIENTATION PLAN

N.T.S.

NOTE: THIS PLAN IS A PICTORAL REPRESENTATION OF THE SITE LAYOUT. REFERENCE APPROPRIATE ARCHITECTURAL SITE PLAN FOR ALL NECESSARY INFORMATION.

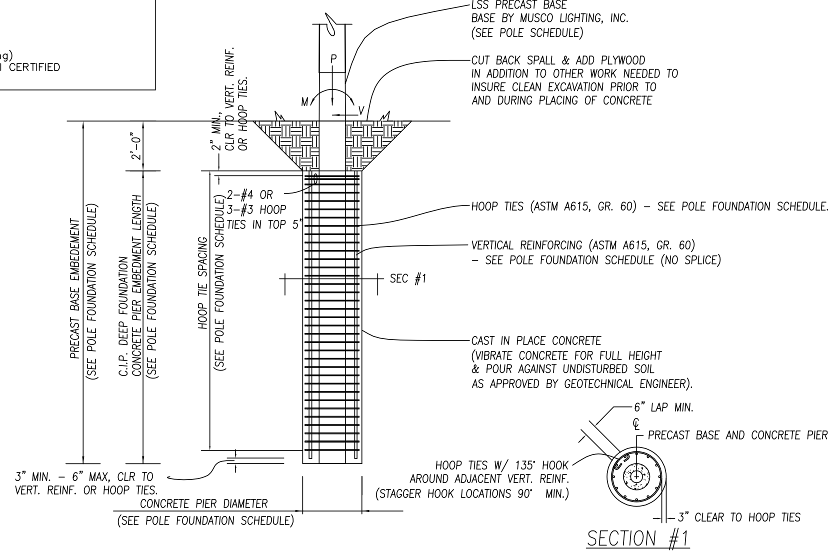

LSS PRECAST BASE
BASE BY MUSCO LIGHTING, INC.
(SEE POLE SCHEDULE)
CUT BACK SPALL & ADD PLYWOOD
IN ADDITION TO OTHER WORK NEEDED TO
INSURE CLEAN EXCAVATION PRIOR TO
AND DURING PLACING OF CONCRETE
P
M
V
2" MIN., CLR TO VERT. REINF. OR HOOP TIES.
2'–0"
PRECAST BASE EMBEDEMENT (SEE POLE FOUNDATION SCHEDULE)
C.I.P. DEEP FOUNDATION CONCRETE PIER EMBEDMENT LENGTH (SEE POLE FOUNDATION SCHEDULE)
HOOP TIE SPACING (SEE POLE FOUNDATION SCHEDULE)
2–#4 OR 3–#3 HOOP TIES IN TOP 5"
HOOP TIES (ASTM A615, GR. 60) – SEE POLE FOUNDATION SCHEDULE.
VERTICAL REINFORCING (ASTM A615, GR. 60)
– SEE POLE FOUNDATION SCHEDULE (NO SPLICE)
SEC #1
CAST IN PLACE CONCRETE
(VIBRATE CONCRETE FOR FULL HEIGHT
& POUR AGAINST UNDISTURBED SOIL
AS APPROVED BY GEOTECHNICAL ENGINEER).
6" LAP MIN.
℄ PRECAST BASE AND CONCRETE PIER
HOOP TIES W/ 135° HOOK
AROUND ADJACENT VERT. REINF.
(STAGGER HOOK LOCATIONS 90° MIN.)
3" CLEAR TO HOOP TIES
3" MIN. – 6" MAX, CLR TO VERT. REINF. OR HOOP TIES.
CONCRETE PIER DIAMETER
(SEE POLE FOUNDATION SCHEDULE)
SECTION #1

A REINFORCED FOUNDATION DETAIL

N.T.S. DSA–A2–CASFND_A

POLE FOUNDATION SCHEDULE

POLE TYPE–# OF FIXTURES (MAX) (LSS=LIGHT STRUCTURE)	MARK (SEE POLE ORIENTATION PLAN)	WIND OR SEISMIC (SEISMIC FORCE INCLUDES OVERSTRENGTH FACTOR=1.5)	ASD LEVEL FORCES (MAX)			C.I.P. DEEP FOUNDATION				PRECAST BASE
			MOMENT (M) FT–LBS*	SHEAR (V) LBS	VERTICAL (P) LBS**	DIAMETER INCHES	EMBEDMENT FEET (SEE NOTE BELOW)	VERTICAL REINFORCING (ASTM A615, GR 60)	HOOP TIE SIZE & SPACING (ASTM A615, GR 60)	EMBEDMENT FEET
LSS60A–4	A2	SEISMIC	16,100	402	1,978	36"	8'–0"	8–#8	#4 @ 6" O.C. TOP 9'–0" & #4 @ 12" O.C. BELOW	10'–0"
		WIND	33,300	837	1,170					
LSS60B–6	A1	SEISMIC	22,800	584	2,574	36"	10'–0"	8–#8	#4 @ 6" O.C. TOP 9'–0" & #4 @ 12" O.C. BELOW	12'–0"
		WIND	39,900	1,009	1,472					
LSS70A–5	A3, A4, C1, C2, D1, D2	SEISMIC	20,700	426	2,635	36"	10'–0"	8–#8	#4 @ 6" O.C. TOP 9'–0" & #4 @ 12" O.C. BELOW	12'–0"
		WIND	49,600	1,057	1,530					
LSS70C–5	B1, B2	SEISMIC	32,900	682	3,633	36"	12'–0"	8–#8	#4 @ 6" O.C. TOP 9'–0" & #4 @ 12" O.C. BELOW	14'–0"
		WIND	61,400	1,344	2,224					
LSS80B–8	B4	SEISMIC	53,300	955	5,132	42"	14'–0"	12–#7	#4 @ 5¼" O.C. TOP 10'–6" & #4 @ 10½" O.C. BELOW	16'–0"
		WIND	88,400	1,686	3,334					
LSS90A–5	B3	SEISMIC	49,800	779	5,250	42"	14'–0"	12–#7	#4 @ 5¼" O.C. TOP 10'–6" & #4 @ 10½" O.C. BELOW	16'–0"
		WIND	95,300	1,703	3,420					

*Moment (M) computed below grade at Shear (V) = 0.

**Vertical (P) load includes steel pole, light fixtures, and attachments. Vertical (P) load for wind is the dressed pole weight for erection purposes. Vertical (P) load for seismic also includes weight of precast base above groundline. Reference Detail "A" on MS Sheet(s) for precast base weight.

Note:
Final Embedment to be determined in the field by the Geotechnical Engineer of Record

Lodi High School
FIELD LIGHTING
Lodi, CA

No. 4506
Exp. 6–30–27

CONSULTANT
rtm
engineering consultants
1 Ada, Suite 100, Irvine, CA 92618
Tel (949) 462-3200
WWW.RTMEC.COM
RTM JOB NO.: 463.779

musco Lighting®
CORPORATE OFFICE:
P.O. Box 808
100 1st Avenue West
Oskaloosa, Iowa 52577
800/825–6020

DRAWING TITLE: NOTES, FOUNDATION DETAIL
SCALE: SEE PLAN
REVISIONS:
REFERENCE:

PROJECT NO. 247112

DATE: 09/18/2025

DRAWN BY: W.Isiminger

DRAWING NO. MT1
1 OF 10

Information contained herein is the confidential property of Musco Sports Lighting, LLC and/or its parent companies, affiliates, successors and assigns. Reproduction, distribution, or use of the information other than its limited, intended purpose without express written permission is prohibited.
Musco products referenced or shown are protected by one or more of the following patents. U.S. Patents: 4947303; 4994718; 5075828; 5134557; 5161883; 5211473; 5229681; 5377611; 5398478; 5423281; 5426577; 5600537; 5794387; 5856721; 6036338; 6203176; 6250596; 6340790; 6398392; 6681110; 6833675; 6929385; 6969034; 6988697; 7059572; D337168; D353797; D353911; D411096. Other patents pending.

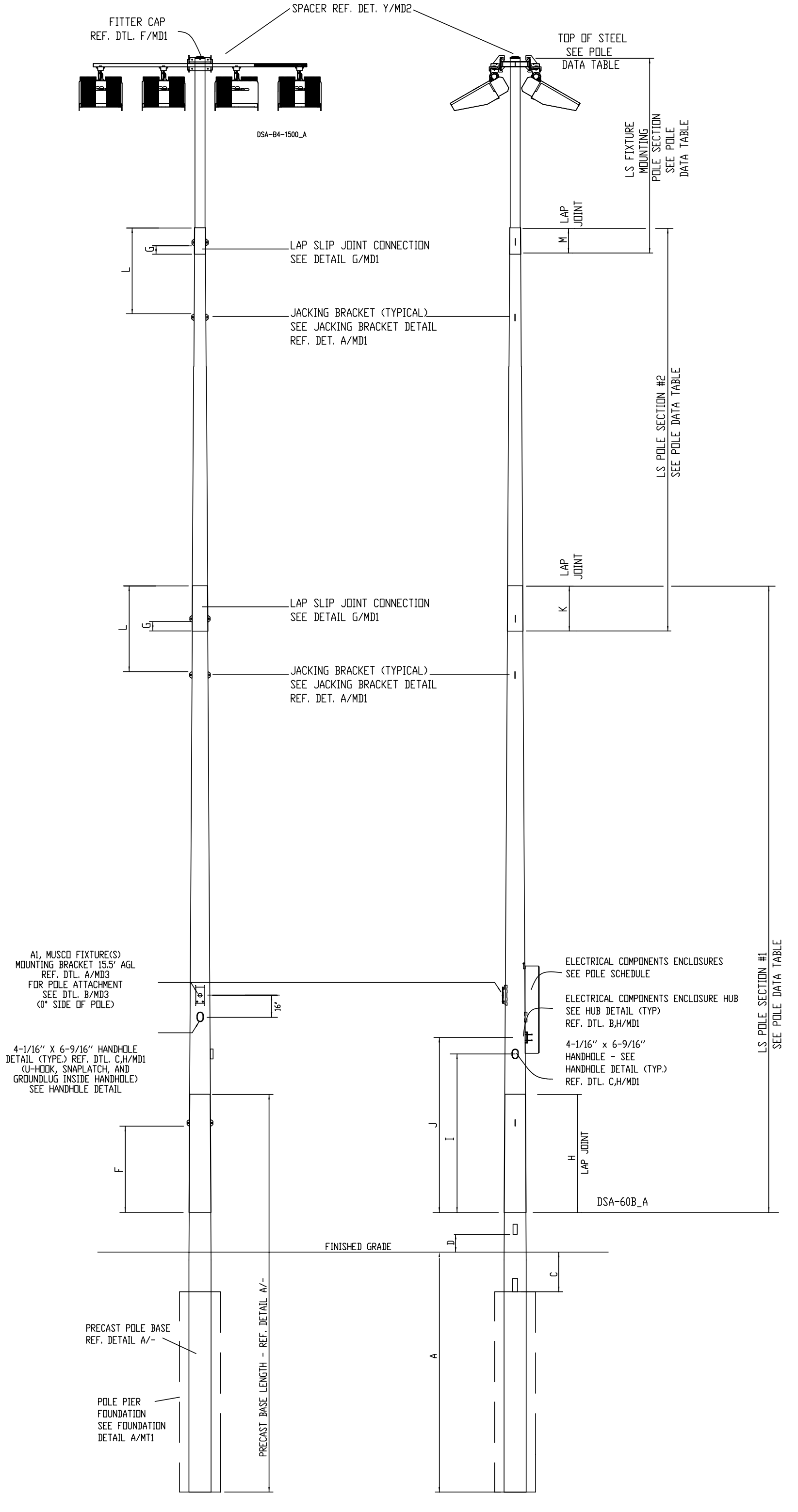
FITTER CAP
REF. DTL. F/MD1
SPACER REF. DET. Y/MD2
TOP OF STEEL
SEE POLE
DATA TABLE
DSA-B4-1500_A
LS FIXTURE
MOUNTING
POLE SECTION
SEE POLE
DATA TABLE
LAP
JOINT
M
L
G
LAP SLIP JOINT CONNECTION
SEE DETAIL G/MD1
JACKING BRACKET (TYPICAL)
SEE JACKING BRACKET DETAIL
REF. DET. A/MD1
LS POLE SECTION #2
SEE POLE DATA TABLE
LAP
JOINT
K
L
G
LAP SLIP JOINT CONNECTION
SEE DETAIL G/MD1
JACKING BRACKET (TYPICAL)
SEE JACKING BRACKET DETAIL
REF. DET. A/MD1
A1, MUSCO FIXTURE(S)
MOUNTING BRACKET 15.5' AGL
REF. DTL. A/MD3
FOR POLE ATTACHMENT
SEE DTL. B/MD3
(0° SIDE OF POLE)
16"
4-1/16" X 6-9/16" HANDHOLE
DETAIL (TYPE.) REF. DTL. C,H/MD1
(U-HOOK, SNAPLATCH, AND
GROUNDLUG INSIDE HANDHOLE)
SEE HANDHOLE DETAIL
ELECTRICAL COMPONENTS ENCLOSURES
SEE POLE SCHEDULE
ELECTRICAL COMPONENTS ENCLOSURE HUB
SEE HUB DETAIL (TYP)
REF. DTL. B,H/MD1
4-1/16" x 6-9/16"
HANDHOLE - SEE
HANDHOLE DETAIL (TYP.)
REF. DTL. C,H/MD1
LS POLE SECTION #1
SEE POLE DATA TABLE
F
J
I
H
LAP JOINT
DSA-60B_A
FINISHED GRADE
D
C
A
PRECAST POLE BASE
REF. DETAIL A/-
POLE PIER
FOUNDATION
SEE FOUNDATION
DETAIL A/MT1
PRECAST BASE LENGTH - REF. DETAIL A/-

LSS60B POLE FRONT VIEW
N.T.S.

LSS60B POLE SIDE VIEW
N.T.S. DSA-60BBASE_A

NOTATION	DIMENSION
	LSS60B
A	12'-0"
C	2'-0" NOM.
D	1'-0" NOM.
F	4'-4" NOM.
G	1'-6"
H	5'-11 3/8" NOM. 5'-3 3/4" MIN.
I	7'-7 1/2" NOM.
J	8'-9 1/2" NOM.
K	3'-7 1/4" NOM. 1'-10 1/4" MIN.
L	4'-7" NOM.
M	1'-10" NOM. 1'-3" MIN.

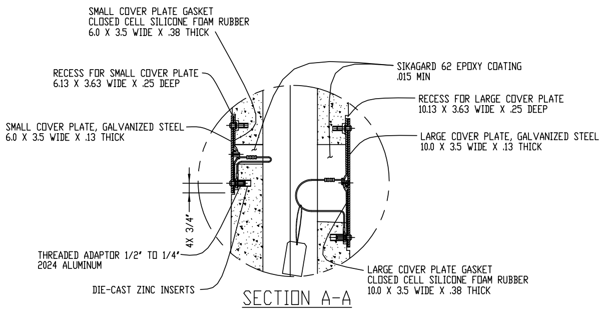
SMALL COVER PLATE GASKET
CLOSED CELL SILICONE FOAM RUBBER
6.0 X 3.5 WIDE X .38 THICK
RECESS FOR SMALL COVER PLATE
6.13 X 3.63 WIDE X .25 DEEP
SMALL COVER PLATE, GALVANIZED STEEL
6.0 X 3.5 WIDE X .13 THICK
4X 3/4"
THREADED ADAPTOR 1/2" TO 1/4"
2024 ALUMINUM
DIE-CAST ZINC INSERTS
SIKAGARD 62 EPOXY COATING
.015 MIN
RECESS FOR LARGE COVER PLATE
10.13 X 3.63 WIDE X .25 DEEP
LARGE COVER PLATE, GALVANIZED STEEL
10.0 X 3.5 WIDE X .13 THICK
LARGE COVER PLATE GASKET
CLOSED CELL SILICONE FOAM RUBBER
10.0 X 3.5 WIDE X .38 THICK

SECTION A-A
DSA-3Bconc_M

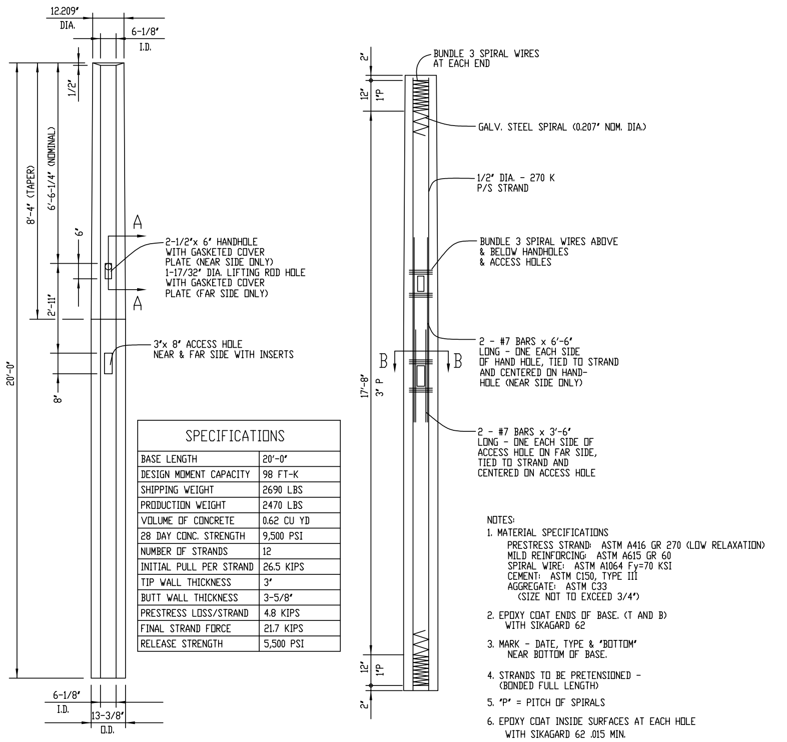
12.209"
DIA.
6-1/8"
I.D.
1/2"
8'-4" (TAPER)
6'-6-1/4" (NOMINAL)
6"
2'-11"
8"
20'-0"
A
A
2-1/2"x 6" HANDHOLE
WITH GASKETED COVER
PLATE (NEAR SIDE ONLY)
1-17/32" DIA. LIFTING ROD HOLE
WITH GASKETED COVER
PLATE (FAR SIDE ONLY)
3"x 8" ACCESS HOLE
NEAR & FAR SIDE WITH INSERTS
6-1/8"
I.D.
13-3/8"
O.D.
2"
12"
1"P
BUNDLE 3 SPIRAL WIRES
AT EACH END
GALV. STEEL SPIRAL (0.207" NOM. DIA.)
1/2" DIA. - 270 K
P/S STRAND
BUNDLE 3 SPIRAL WIRES ABOVE
& BELOW HANDHOLES
& ACCESS HOLES
B
B
17'-8"
3" P
2 - #7 BARS x 6'-6"
LONG - ONE EACH SIDE
OF HAND HOLE, TIED TO STRAND
AND CENTERED ON HAND-
HOLE (NEAR SIDE ONLY)
2 - #7 BARS x 3'-6"
LONG - ONE EACH SIDE OF
ACCESS HOLE ON FAR SIDE,
TIED TO STRAND AND
CENTERED ON ACCESS HOLE

SPECIFICATIONS	
BASE LENGTH	20'-0"
DESIGN MOMENT CAPACITY	98 FT-K
SHIPPING WEIGHT	2690 LBS
PRODUCTION WEIGHT	2470 LBS
VOLUME OF CONCRETE	0.62 CU YD
28 DAY CONC. STRENGTH	9,500 PSI
NUMBER OF STRANDS	12
INITIAL PULL PER STRAND	26.5 KIPS
TIP WALL THICKNESS	3"
BUTT WALL THICKNESS	3-5/8"
PRESTRESS LOSS/STRAND	4.8 KIPS
FINAL STRAND FORCE	21.7 KIPS
RELEASE STRENGTH	5,500 PSI

NOTES:

1. MATERIAL SPECIFICATIONS
   PRESTRESS STRAND: ASTM A416 GR 270 (LOW RELAXATION)
   MILD REINFORCING: ASTM A615 GR 60
   SPIRAL WIRE: ASTM A1064 Fy=70 KSI
   CEMENT: ASTM C150, TYPE III
   AGGREGATE: ASTM C33
   (SIZE NOT TO EXCEED 3/4")
2. EPOXY COAT ENDS OF BASE. (T AND B) WITH SIKAGARD 62
3. MARK - DATE, TYPE & "BOTTOM" NEAR BOTTOM OF BASE.
4. STRANDS TO BE PRETENSIONED - (BONDED FULL LENGTH)
5. "P" = PITCH OF SPIRALS
6. EPOXY COAT INSIDE SURFACES AT EACH HOLE WITH SIKAGARD 62 .015 MIN.

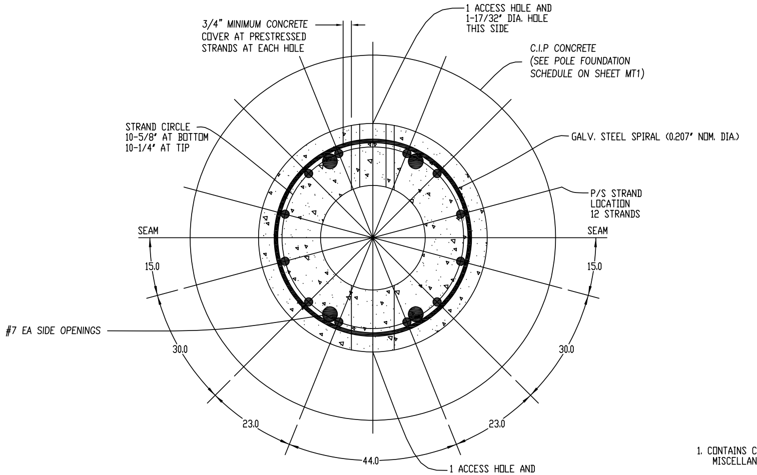
3/4" MINIMUM CONCRETE
COVER AT PRESTRESSED
STRANDS AT EACH HOLE
1 ACCESS HOLE AND
1-17/32" DIA. HOLE
THIS SIDE
C.I.P CONCRETE
(SEE POLE FOUNDATION
SCHEDULE ON SHEET MT1)
STRAND CIRCLE
10-5/8" AT BOTTOM
10-1/4" AT TIP
GALV. STEEL SPIRAL (0.207" NOM. DIA.)
P/S STRAND
LOCATION
12 STRANDS
SEAM
SEAM
15.0
15.0
#7 EA SIDE OPENINGS
30.0
30.0
23.0
23.0
44.0
1 ACCESS HOLE AND
1 HAND HOLE THIS SIDE

PLAN SECTION B-B

Ⓐ TYPE 3B PRECAST BASE DETAIL

N.T.S. DSA-3Bconc_M

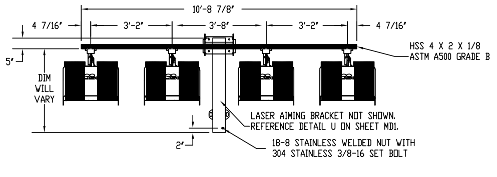
10'-8 7/8"
4 7/16"
3'-2"
3'-8"
3'-2"
4 7/16"
5"
DIM
WILL
VARY
2"
HSS 4 X 2 X 1/8
ASTM A500 GRADE B
LASER AIMING BRACKET NOT SHOWN.
REFERENCE DETAIL U ON SHEET MD1.
18-8 STAINLESS WELDED NUT WITH
304 STAINLESS 3/8-16 SET BOLT

Ⓑ 4 FIXTURE CONFIGURATION
N.T.S. DSA-B4C-1500_A

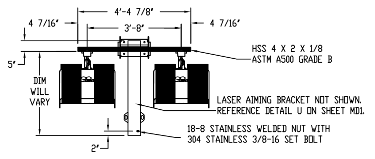
4'-4 7/8"
4 7/16"
3'-8"
4 7/16"
5"
DIM
WILL
VARY
2"
HSS 4 X 2 X 1/8
ASTM A500 GRADE B
LASER AIMING BRACKET NOT SHOWN.
REFERENCE DETAIL U ON SHEET MD1.
18-8 STAINLESS WELDED NUT WITH
304 STAINLESS 3/8-16 SET BOLT

Ⓒ 2 FIXTURE CONFIGURATION
N.T.S. DSA-B2C-1500_A

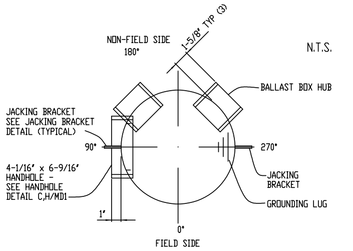
NON-FIELD SIDE
180°
1-5/8" TYP (3)
N.T.S.
BALLAST BOX HUB
JACKING BRACKET
SEE JACKING BRACKET
DETAIL (TYPICAL)
90°
270°
4-1/16" x 6-9/16"
HANDHOLE -
SEE HANDHOLE
DETAIL C,H/MD1
JACKING
BRACKET
GROUNDING LUG
1"
0°
FIELD SIDE

POLE ORIENTATION
N.T.S.

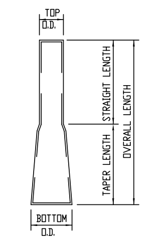
TOP
O.D.
STRAIGHT LENGTH
TAPER LENGTH
OVERALL LENGTH
BOTTOM
O.D.

FIXTURE MOUNTING POLE SECTION

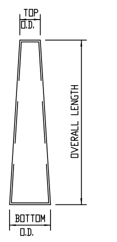
TOP
O.D.
OVERALL LENGTH
BOTTOM
O.D.

TOP/MIDDLE/BOTTOM POLE SECTION

1. CONTAINS COMBINED EPA OF LIGHT FIXTURES, CROSS ARM AND MISCELLANEOUS FIXTURE MOUNTING APPARATUS.

FIXTURE WEIGHT 50.3 LBS. THIS INCLUDES THE WEIGHT OF FIXTURE, CROSS ARM & MISC. MOUNTING APPARATUS. ELECTRICAL BALLAST BOX WEIGHT 20 LBS PER FIXTURE SERVICED

POLE SCHEDULE						
SITE LOCATION	POLE MARK	REFERENCE LOCATION	POLE TYPE	FIXTURE CONFIGURATION	TOTAL EPA[1]	BALLAST BOX REQUIREMENTS
SEE SITE PLAN (BY OTHERS)	A1	SEE POLE ORIENTATION PLAN	LSS60B	4,2-SEE DETAIL B,C/MS1	17.28 SQ. FT.	SEE DETAIL SL,O/MD1

DSA-POLESCHE_C

POLE DATA TABLE											
POLE TYPE	PIECE MARK	MAX NUMBER of X-Arms	POLE SECTION	TOP O.D. (INCHES)	BTM. O.D. (INCHES)	OVERALL LENGTH	STRAIGHT LENGTH	TAPER LENGTH	THICKNESS (INCHES)	TOP OF STEEL NOMINAL	ASTM REFERENCE
LSS60B	LS-2009	2	FIXTURE MOUNTING	6.000"	6.505"	5'-3"	3'-5"	1'-10"	.120	59'-11 3/4"	A513 (Fy=38ksi)
	MP-1TTDSA-2		#2	5.980"	9.630"	26'-0 7/8"	-----	26'-0 7/8"	.120	-----	A595A (Fy=55 ksi) or A572, Gr 55 or 65
	MP-3BT-D		#1	8.886"	13.400"	32'-2 7/8"	-----	32'-2 7/8"	.179	-----	A595A (Fy=55 ksi) or A572, Gr 55 or 65
	MP-3BDSA		PRECAST BASE	FOR PRECAST MEMBER PROPERTIES SEE PRECAST BASE DETAIL A/-							

DSA-60BDT_J

IDENTIFICATION STAMP
DIV. OF THE STATE ARCHITECT
APP: 02-123587 INC:
REVIEWED FOR
SS ☑ FLS ☑ ACS ☑
DATE: 01/16/2026

Lodi High School
FIELD LIGHTING
Lodi, CA

JOSH RANDALL
No. 4506
Exp. 6-30-27

CONSULTANT
rtm
engineering consultants
1 Ada, Suite 100, Irvine, CA 92618
Tel (949) 462-3200
WWW.RTMEC.COM
RTM JOB NO.: 463.779

musco Lighting®
CORPORATE OFFICE:
P.O. Box 808
100 1st Avenue West
Oskaloosa, Iowa 52577
800/825-6020

DRAWING TITLE:
POLE DETAIL
SCALE: SEE PLAN
REVISIONS:
REFERENCE:

PROJECT NO. 247112

DATE: 09/18/2025

DRAWN BY: W.Isiminger

DRAWING NO. MS1
2 OF 10

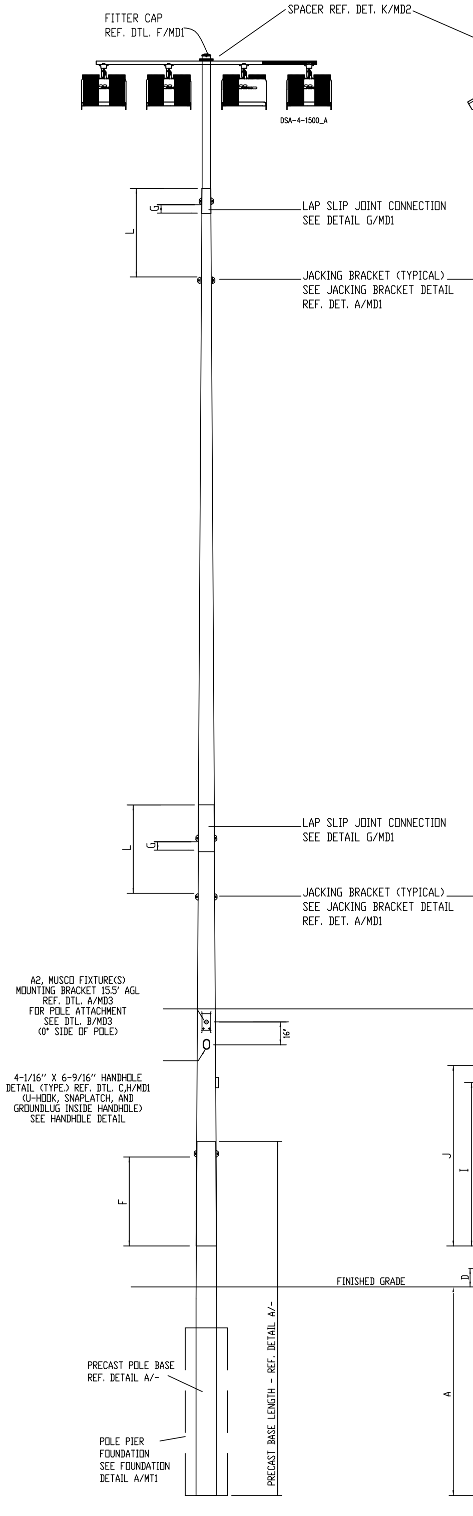
FITTER CAP
REF. DTL. F/MD1
SPACER REF. DET. K/MD2
DSA-4-1500_A
LAP SLIP JOINT CONNECTION
SEE DETAIL G/MD1
JACKING BRACKET (TYPICAL)
SEE JACKING BRACKET DETAIL
REF. DET. A/MD1
LAP SLIP JOINT CONNECTION
SEE DETAIL G/MD1
JACKING BRACKET (TYPICAL)
SEE JACKING BRACKET DETAIL
REF. DET. A/MD1
A2, MUSCO FIXTURE(S)
MOUNTING BRACKET 15.5' AGL
REF. DTL. A/MD3
FOR POLE ATTACHMENT
SEE DTL. B/MD3
(0° SIDE OF POLE)
4-1/16" x 6-9/16" HANDHOLE
DETAIL (TYPE) REF. DTL. C,H/MD1
(U-HOOK, SNAPLATCH, AND
GROUNDLUG INSIDE HANDHOLE)
SEE HANDHOLE DETAIL
L
G
F
16"
FINISHED GRADE
PRECAST POLE BASE
REF. DETAIL A/-
POLE PIER
FOUNDATION
SEE FOUNDATION
DETAIL A/MT1
PRECAST BASE LENGTH - REF. DETAIL A/-

LSS60A POLE FRONT VIEW
N.T.S.

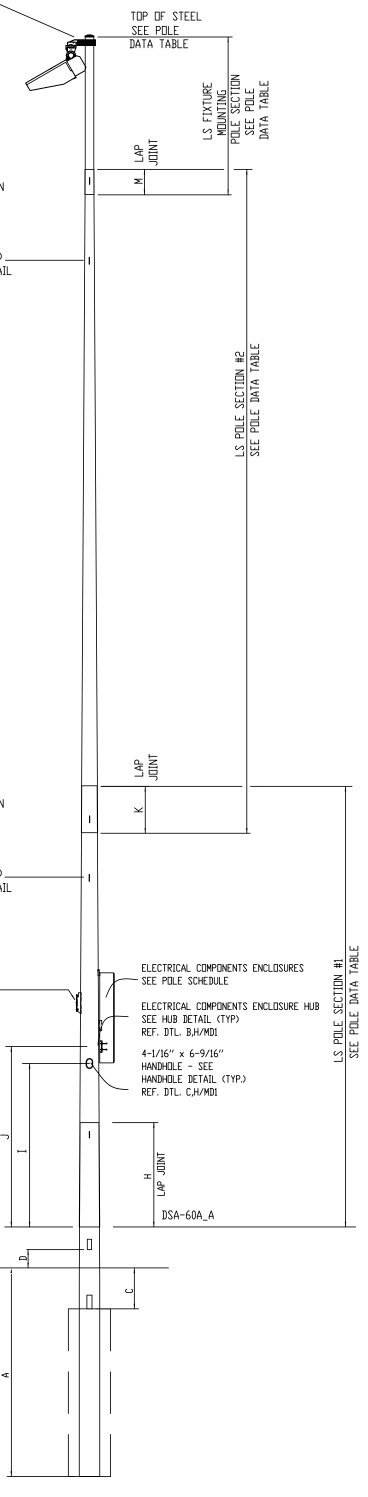
TOP OF STEEL
SEE POLE
DATA TABLE
LS FIXTURE
MOUNTING
POLE SECTION
SEE POLE
DATA TABLE
LAP
JOINT
M
LS POLE SECTION #2
SEE POLE DATA TABLE
LAP
JOINT
K
ELECTRICAL COMPONENTS ENCLOSURES
SEE POLE SCHEDULE
ELECTRICAL COMPONENTS ENCLOSURE HUB
SEE HUB DETAIL (TYP)
REF. DTL. B,H/MD1
4-1/16" x 6-9/16"
HANDHOLE - SEE
HANDHOLE DETAIL (TYP.)
REF. DTL. C,H/MD1
LS POLE SECTION #1
SEE POLE DATA TABLE
J
I
H
LAP JOINT
DSA-60A_A
D
C
A

LSS60A POLE SIDE VIEW
N.T.S.
DSA-60ABASE_A

NOTATION	DIMENSION
	LSS60A
A	10'-0"
C	2'-0" NOM.
D	1'-0" NOM.
F	4'-4" NOM.
G	1'-6"
H	5'-1 1/4" NOM. 4'-7 3/8" MIN.
I	7'-7 1/2" NOM.
J	8'-9 1/2" NOM.
K	3'-7 1/4" NOM. 1'-10 1/4" MIN.
L	4'-7" NOM.
M	1'-8" NOM. 11 1/2" MIN.

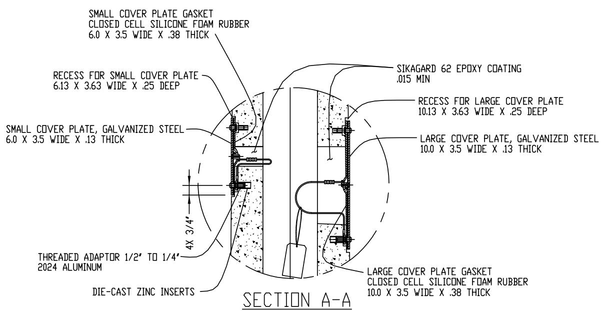
SMALL COVER PLATE GASKET
CLOSED CELL SILICONE FOAM RUBBER
6.0 X 3.5 WIDE X .38 THICK
RECESS FOR SMALL COVER PLATE
6.13 X 3.63 WIDE X .25 DEEP
SMALL COVER PLATE, GALVANIZED STEEL
6.0 X 3.5 WIDE X .13 THICK
THREADED ADAPTOR 1/2" TO 1/4"
2024 ALUMINUM
DIE-CAST ZINC INSERTS
4X 3/4"
SIKAGARD 62 EPOXY COATING
.015 MIN
RECESS FOR LARGE COVER PLATE
10.13 X 3.63 WIDE X .25 DEEP
LARGE COVER PLATE, GALVANIZED STEEL
10.0 X 3.5 WIDE X .13 THICK
LARGE COVER PLATE GASKET
CLOSED CELL SILICONE FOAM RUBBER
10.0 X 3.5 WIDE X .38 THICK

SECTION A-A
DSA-2Bconc_L

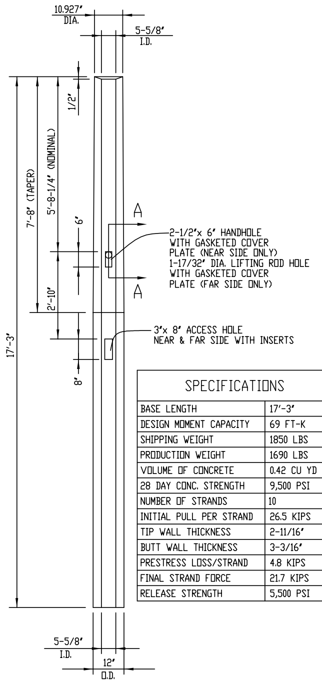
10.927"
DIA.
5-5/8"
I.D.
1/2"
5'-8-1/4" (NOMINAL)
7'-8" (TAPER)
6"
2'-10"
17'-3"
8'
A
A
2-1/2"x 6" HANDHOLE
WITH GASKETED COVER
PLATE (NEAR SIDE ONLY)
1-17/32" DIA. LIFTING ROD HOLE
WITH GASKETED COVER
PLATE (FAR SIDE ONLY)
3"x 8" ACCESS HOLE
NEAR & FAR SIDE WITH INSERTS
5-5/8"
I.D.
12"
O.D.

SPECIFICATIONS	
BASE LENGTH	17'-3"
DESIGN MOMENT CAPACITY	69 FT-K
SHIPPING WEIGHT	1850 LBS
PRODUCTION WEIGHT	1690 LBS
VOLUME OF CONCRETE	0.42 CU YD
28 DAY CONC. STRENGTH	9,500 PSI
NUMBER OF STRANDS	10
INITIAL PULL PER STRAND	26.5 KIPS
TIP WALL THICKNESS	2-11/16"
BUTT WALL THICKNESS	3-3/16"
PRESTRESS LOSS/STRAND	4.8 KIPS
FINAL STRAND FORCE	21.7 KIPS
RELEASE STRENGTH	5,500 PSI

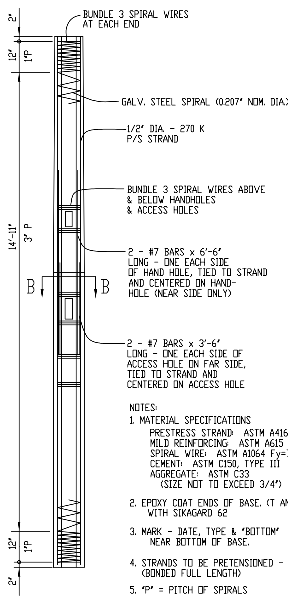
2"
12"
1"P
BUNDLE 3 SPIRAL WIRES
AT EACH END
GALV. STEEL SPIRAL (0.207" NOM. DIA.)
1/2" DIA. - 270 K
P/S STRAND
BUNDLE 3 SPIRAL WIRES ABOVE
& BELOW HANDHOLES
& ACCESS HOLES
14'-11"
3" P
B
B
2 - #7 BARS x 6'-6"
LONG - ONE EACH SIDE
OF HAND HOLE, TIED TO STRAND
AND CENTERED ON HAND-
HOLE (NEAR SIDE ONLY)
2 - #7 BARS x 3'-6"
LONG - ONE EACH SIDE OF
ACCESS HOLE ON FAR SIDE,
TIED TO STRAND AND
CENTERED ON ACCESS HOLE
12"
1"P
2"

NOTES:
1. MATERIAL SPECIFICATIONS
   PRESTRESS STRAND: ASTM A416 GR 270 (LOW RELAXATION)
   MILD REINFORCING: ASTM A615 GR 60
   SPIRAL WIRE: ASTM A1064 Fy=70 KSI
   CEMENT: ASTM C150, TYPE III
   AGGREGATE: ASTM C33
   (SIZE NOT TO EXCEED 3/4")
2. EPOXY COAT ENDS OF BASE. (T AND B) WITH SIKAGARD 62
3. MARK - DATE, TYPE & "BOTTOM" NEAR BOTTOM OF BASE.
4. STRANDS TO BE PRETENSIONED - (BONDED FULL LENGTH)
5. "P" = PITCH OF SPIRALS
6. EPOXY COAT INSIDE SURFACES AT EACH HOLE WITH SIKAGARD 62 .015 MIN.

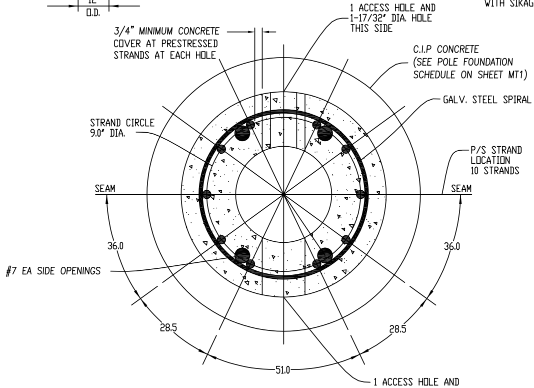
3/4" MINIMUM CONCRETE
COVER AT PRESTRESSED
STRANDS AT EACH HOLE
1 ACCESS HOLE AND
1-17/32" DIA. HOLE
THIS SIDE
C.I.P CONCRETE
(SEE POLE FOUNDATION
SCHEDULE ON SHEET MT1)
GALV. STEEL SPIRAL (0.207" NOM. DIA.)
STRAND CIRCLE
9.0" DIA.
P/S STRAND
LOCATION
10 STRANDS
SEAM
SEAM
36.0
36.0
#7 EA SIDE OPENINGS
28.5
28.5
51.0
1 ACCESS HOLE AND
1 HAND HOLE THIS SIDE

PLAN SECTION B-B

A TYPE 2B PRECAST BASE DETAIL
N.T.S.
DSA-2Bconc_L

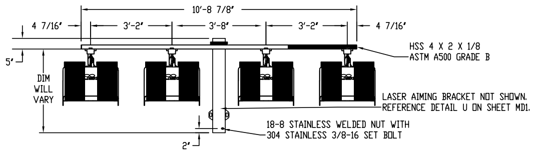
10'-8 7/8"
4 7/16"
3'-2"
3'-8"
3'-2"
4 7/16"
5"
DIM
WILL
VARY
2"
HSS 4 X 2 X 1/8
ASTM A500 GRADE B
LASER AIMING BRACKET NOT SHOWN.
REFERENCE DETAIL U ON SHEET MD1.
18-8 STAINLESS WELDED NUT WITH
304 STAINLESS 3/8-16 SET BOLT

B 4 FIXTURE CONFIGURATION
N.T.S.
DSA-4C-1500_A

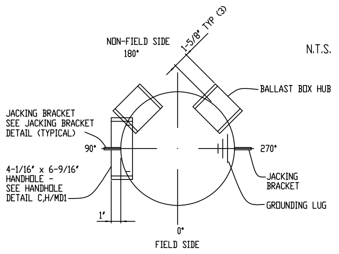
NON-FIELD SIDE
180°
1-5/8" TYP (3)
N.T.S.
BALLAST BOX HUB
JACKING BRACKET
SEE JACKING BRACKET
DETAIL (TYPICAL)
90°
270°
4-1/16" x 6-9/16"
HANDHOLE -
SEE HANDHOLE
DETAIL C,H/MD1
JACKING
BRACKET
GROUNDING LUG
1"
0°
FIELD SIDE

POLE ORIENTATION
N.T.S.

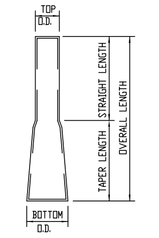
TOP
O.D.
STRAIGHT LENGTH
TAPER LENGTH
OVERALL LENGTH
BOTTOM
O.D.

FIXTURE MOUNTING POLE SECTION

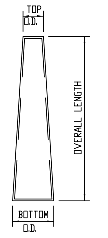
TOP
O.D.
OVERALL LENGTH
BOTTOM
O.D.

TOP/MIDDLE/BOTTOM POLE SECTION

1. CONTAINS COMBINED EPA OF LIGHT FIXTURES, CROSS ARM AND MISCELLANEOUS FIXTURE MOUNTING APPARATUS.

FIXTURE WEIGHT 50.3 LBS. THIS INCLUDES THE WEIGHT OF FIXTURE, CROSS ARM & MISC. MOUNTING APPARATUS. ELECTRICAL BALLAST BOX WEIGHT 20 LBS PER FIXTURE SERVICED

POLE SCHEDULE

SITE LOCATION	POLE MARK	REFERENCE LOCATION	POLE TYPE	FIXTURE CONFIGURATION	TOTAL EPA[1]	BALLAST BOX REQUIREMENTS
SEE SITE PLAN (BY OTHERS)	A2	SEE POLE ORIENTATION PLAN	LSS60A	4 - SEE DETAIL B/MS2	11.14 SQ. FT.	SEE DETAIL P,O/MD1

DSA-POLESCHE_C

POLE DATA TABLE

POLE TYPE	PIECE MARK	MAX NUMBER of X-Arms	POLE SECTION	TOP O.D. (INCHES)	BTM. O.D. (INCHES)	OVERALL LENGTH	STRAIGHT LENGTH	TAPER LENGTH	THICKNESS (INCHES)	TOP OF STEEL NOMINAL	ASTM REFERENCE
LSS60A	LS-2000	1	FIXTURE MOUNTING	4.750"	5.081"	5'-3"	3'-7"	1'-8"	.120	60'-2 7/8"	A513 (Fy=38ksi)
	MP-1TOSA		#2	4.596"	9.630"	35'-11 1/2"	-----	35'-11 1/2"	.120	-----	A595A (Fy=55 ksi) or A572, Gr 55 or 65
	MP-1BT-D		#1	8.886"	12.000"	22'-2 7/8"	-----	22'-2 7/8"	.179	-----	A595A (Fy=55 ksi) or A572, Gr 55 or 65
	MP-2BDSA		PRECAST BASE	FOR PRECAST MEMBER PROPERTIES SEE PRECAST BASE DETAIL A/-							

DSA-60ADT_H

IDENTIFICATION STAMP
DIV. OF THE STATE ARCHITECT
APP: 02-123587 INC:
REVIEWED FOR
SS ☑ FLS ☑ ACS ☑
DATE: 01/16/2026

Lodi High School
FIELD LIGHTING
Lodi, CA

No. 4506
Exp. 6-30-27

CONSULTANT
rtm
engineering consultants
1 Ada, Suite 100, Irvine, CA 92618
Tel (949) 462-3200
WWW.RTMEC.COM
RTM JOB NO.: 463.779

musco Lighting®
CORPORATE OFFICE:
P.O. Box 808
100 1st Avenue West
Oskaloosa, Iowa 52577
800/825-6020

DRAWING TITLE: POLE DETAIL
SCALE: SEE PLAN
REVISIONS:
REFERENCE:

PROJECT NO. 247112

DATE: 09/18/2025

DRAWN BY: W.Isiminger

DRAWING NO. MS2
3 OF 10

DSA-60_A

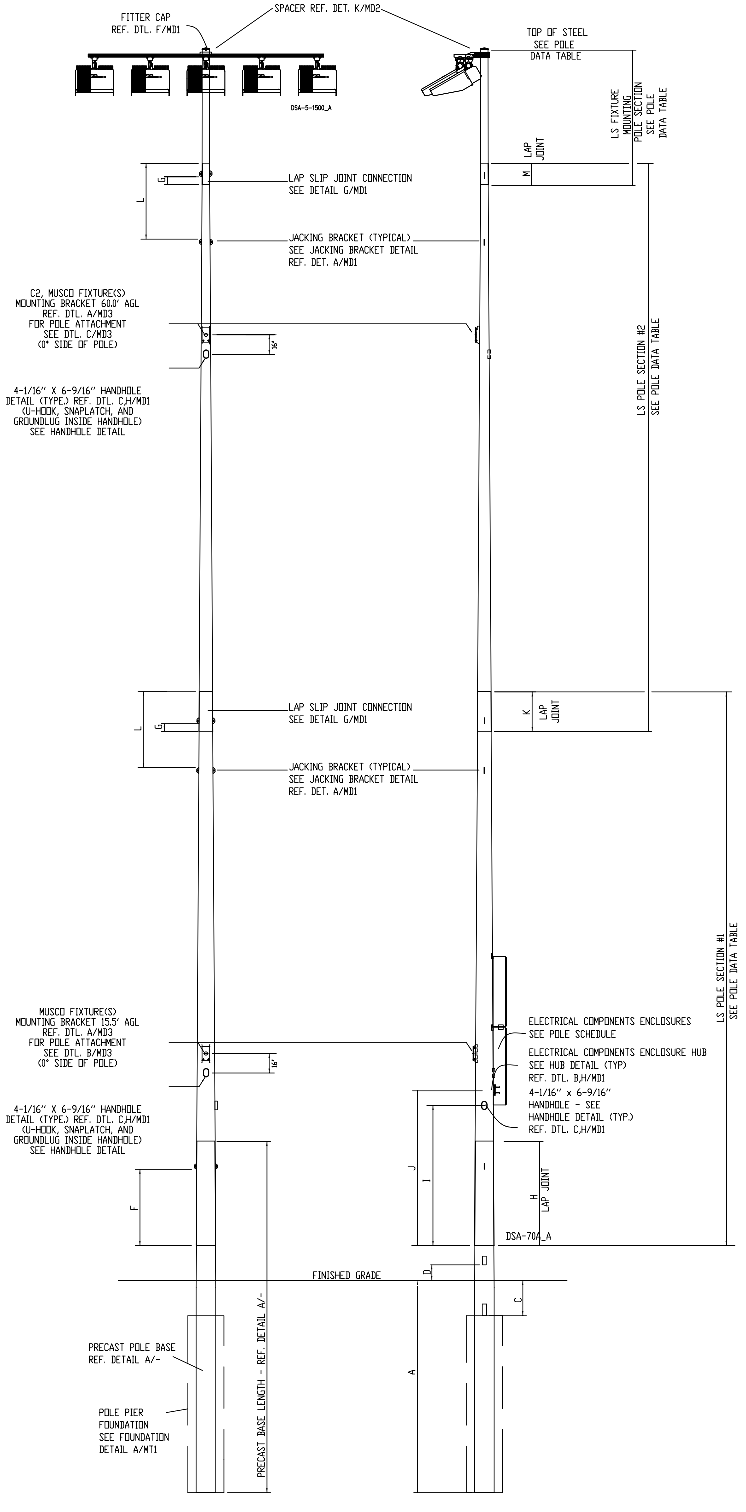
FITTER CAP
REF. DTL. F/MD1
SPACER REF. DET. K/MD2
DSA-5-1500_A
TOP OF STEEL
SEE POLE
DATA TABLE
LS FIXTURE MOUNTING POLE SECTION SEE POLE DATA TABLE
LAP JOINT
M
G
L
LAP SLIP JOINT CONNECTION
SEE DETAIL G/MD1
JACKING BRACKET (TYPICAL)
SEE JACKING BRACKET DETAIL
REF. DET. A/MD1
C2, MUSCO FIXTURE(S)
MOUNTING BRACKET 60.0' AGL
REF. DTL. A/MD3
FOR POLE ATTACHMENT
SEE DTL. C/MD3
(0° SIDE OF POLE)
16"
4-1/16" X 6-9/16" HANDHOLE
DETAIL (TYPE.) REF. DTL. C,H/MD1
(U-HOOK, SNAPLATCH, AND
GROUNDLUG INSIDE HANDHOLE)
SEE HANDHOLE DETAIL
LS POLE SECTION #2
SEE POLE DATA TABLE
K
LAP JOINT
LS POLE SECTION #1
SEE POLE DATA TABLE
MUSCO FIXTURE(S)
MOUNTING BRACKET 15.5' AGL
REF. DTL. A/MD3
FOR POLE ATTACHMENT
SEE DTL. B/MD3
(0° SIDE OF POLE)
ELECTRICAL COMPONENTS ENCLOSURES
SEE POLE SCHEDULE
ELECTRICAL COMPONENTS ENCLOSURE HUB
SEE HUB DETAIL (TYP)
REF. DTL. B,H/MD1
4-1/16" x 6-9/16"
HANDHOLE - SEE
HANDHOLE DETAIL (TYP.)
REF. DTL. C,H/MD1
F
J
I
H
LAP JOINT
DSA-70A_A
D
FINISHED GRADE
C
A
PRECAST POLE BASE
REF. DETAIL A/-
POLE PIER
FOUNDATION
SEE FOUNDATION
DETAIL A/MT1
PRECAST BASE LENGTH - REF. DETAIL A/-

LSS70A POLE FRONT VIEW
N.T.S.

LSS70A POLE SIDE VIEW
N.T.S. DSA-70ABASE_A

NOTATION	DIMENSION
	LSS70A
A	12'-0"
C	2'-0" NOM.
D	1'-0" NOM.
E	2'-0 5/8" NOM.
F	4'-4" NOM.
G	1'-6"
H	5'-11 3/8" NOM. 5'-3 3/4" MIN.
I	7'-7 1/2" NOM.
J	8'-9 1/2" NOM.
K	3'-7 1/4" NOM. 1'-10 1/4" MIN.
L	4'-7" NOM.
M	1'-8" NOM. 11 1/2" MIN.

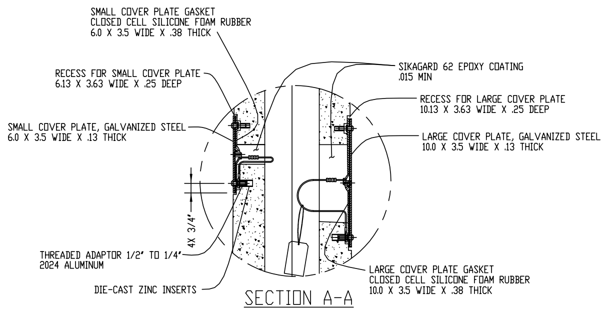
SMALL COVER PLATE GASKET
CLOSED CELL SILICONE FOAM RUBBER
6.0 X 3.5 WIDE X .38 THICK
RECESS FOR SMALL COVER PLATE
6.13 X 3.63 WIDE X .25 DEEP
SMALL COVER PLATE, GALVANIZED STEEL
6.0 X 3.5 WIDE X .13 THICK
4X 3/4"
THREADED ADAPTOR 1/2" TO 1/4"
2024 ALUMINUM
DIE-CAST ZINC INSERTS
SIKAGARD 62 EPOXY COATING
.015 MIN
RECESS FOR LARGE COVER PLATE
10.13 X 3.63 WIDE X .25 DEEP
LARGE COVER PLATE, GALVANIZED STEEL
10.0 X 3.5 WIDE X .13 THICK
LARGE COVER PLATE GASKET
CLOSED CELL SILICONE FOAM RUBBER
10.0 X 3.5 WIDE X .38 THICK

SECTION A-A
DSA-3Bconc_M

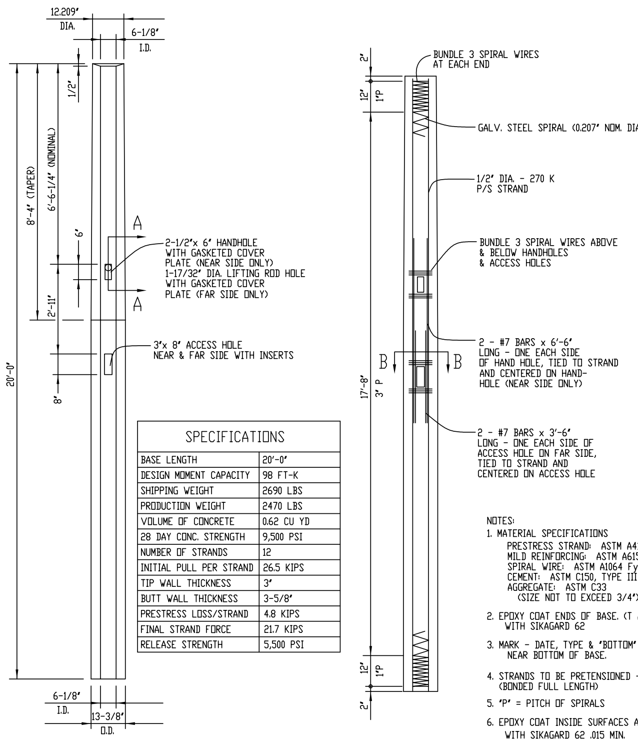
12.209"
DIA.
6-1/8"
I.D.
1/2"
8'-4" (TAPER)
6'-6-1/4" (NOMINAL)
6"
2'-11"
20'-0"
8"
A
A
2-1/2"x 6" HANDHOLE
WITH GASKETED COVER
PLATE (NEAR SIDE ONLY)
1-17/32" DIA. LIFTING ROD HOLE
WITH GASKETED COVER
PLATE (FAR SIDE ONLY)
3"x 8" ACCESS HOLE
NEAR & FAR SIDE WITH INSERTS
6-1/8"
I.D.
13-3/8"
O.D.
2"
12"
1"P
BUNDLE 3 SPIRAL WIRES
AT EACH END
GALV. STEEL SPIRAL (0.207" NOM. DIA.)
1/2" DIA. - 270 K
P/S STRAND
BUNDLE 3 SPIRAL WIRES ABOVE
& BELOW HANDHOLES
& ACCESS HOLES
B
B
17'-8"
3" P
2 - #7 BARS x 6'-6"
LONG - ONE EACH SIDE
OF HAND HOLE, TIED TO STRAND
AND CENTERED ON HAND-
HOLE (NEAR SIDE ONLY)
2 - #7 BARS x 3'-6"
LONG - ONE EACH SIDE OF
ACCESS HOLE ON FAR SIDE,
TIED TO STRAND AND
CENTERED ON ACCESS HOLE
12"
1"P
2"

SPECIFICATIONS	
BASE LENGTH	20'-0"
DESIGN MOMENT CAPACITY	98 FT-K
SHIPPING WEIGHT	2690 LBS
PRODUCTION WEIGHT	2470 LBS
VOLUME OF CONCRETE	0.62 CU YD
28 DAY CONC. STRENGTH	9,500 PSI
NUMBER OF STRANDS	12
INITIAL PULL PER STRAND	26.5 KIPS
TIP WALL THICKNESS	3"
BUTT WALL THICKNESS	3-5/8"
PRESTRESS LOSS/STRAND	4.8 KIPS
FINAL STRAND FORCE	21.7 KIPS
RELEASE STRENGTH	5,500 PSI

NOTES:

1. MATERIAL SPECIFICATIONS
   PRESTRESS STRAND: ASTM A416 GR 270 (LOW RELAXATION)
   MILD REINFORCING: ASTM A615 GR 60
   SPIRAL WIRE: ASTM A1064 Fy=70 KSI
   CEMENT: ASTM C150, TYPE III
   AGGREGATE: ASTM C33
   (SIZE NOT TO EXCEED 3/4")
2. EPOXY COAT ENDS OF BASE. (T AND B) WITH SIKAGARD 62
3. MARK - DATE, TYPE & 'BOTTOM' NEAR BOTTOM OF BASE.
4. STRANDS TO BE PRETENSIONED - (BONDED FULL LENGTH)
5. 'P' = PITCH OF SPIRALS
6. EPOXY COAT INSIDE SURFACES AT EACH HOLE WITH SIKAGARD 62 .015 MIN.

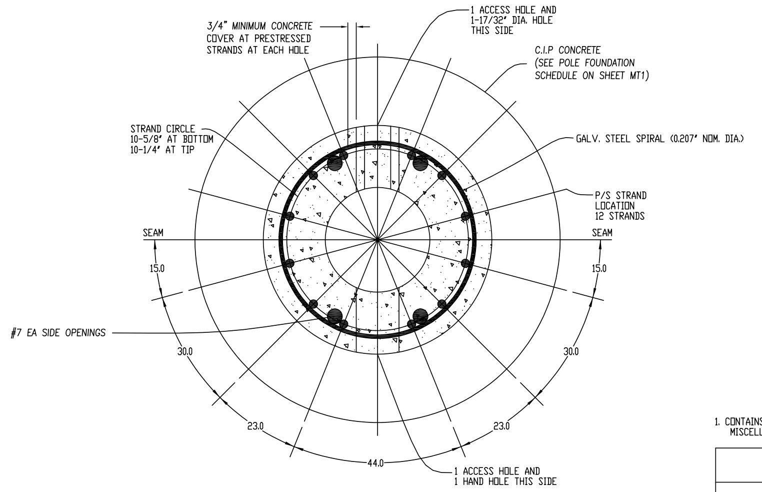
3/4" MINIMUM CONCRETE
COVER AT PRESTRESSED
STRANDS AT EACH HOLE
1 ACCESS HOLE AND
1-17/32" DIA. HOLE
THIS SIDE
C.I.P CONCRETE
(SEE POLE FOUNDATION
SCHEDULE ON SHEET MT1)
STRAND CIRCLE
10-5/8" AT BOTTOM
10-1/4" AT TIP
GALV. STEEL SPIRAL (0.207" NOM. DIA.)
P/S STRAND
LOCATION
12 STRANDS
SEAM
SEAM
15.0
15.0
#7 EA SIDE OPENINGS
30.0
30.0
23.0
23.0
44.0
1 ACCESS HOLE AND
1 HAND HOLE THIS SIDE

PLAN SECTION B-B

A TYPE 3B PRECAST BASE DETAIL

N.T.S. DSA-3Bconc_M

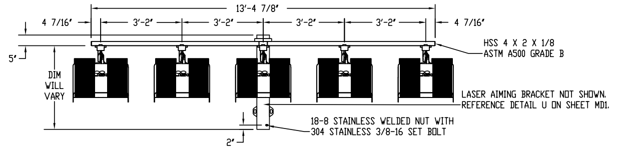
13'-4 7/8"
4 7/16"
3'-2"
3'-2"
3'-2"
3'-2"
4 7/16"
5"
DIM WILL VARY
HSS 4 X 2 X 1/8
ASTM A500 GRADE B
LASER AIMING BRACKET NOT SHOWN.
REFERENCE DETAIL U ON SHEET MD1.
18-8 STAINLESS WELDED NUT WITH
304 STAINLESS 3/8-16 SET BOLT
2"

B 5 FIXTURE CONFIGURATION
N.T.S. DSA-5C-1500_A

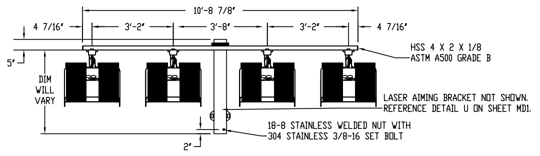
10'-8 7/8"
4 7/16"
3'-2"
3'-8"
3'-2"
4 7/16"
5"
DIM WILL VARY
HSS 4 X 2 X 1/8
ASTM A500 GRADE B
LASER AIMING BRACKET NOT SHOWN.
REFERENCE DETAIL U ON SHEET MD1.
18-8 STAINLESS WELDED NUT WITH
304 STAINLESS 3/8-16 SET BOLT
2"

C 4 FIXTURE CONFIGURATION
N.T.S. DSA-4C-1500_A

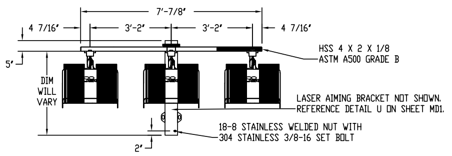
7'-7/8"
4 7/16"
3'-2"
3'-2"
4 7/16"
5"
DIM WILL VARY
HSS 4 X 2 X 1/8
ASTM A500 GRADE B
LASER AIMING BRACKET NOT SHOWN.
REFERENCE DETAIL U ON SHEET MD1.
18-8 STAINLESS WELDED NUT WITH
304 STAINLESS 3/8-16 SET BOLT
2"

D 3 FIXTURE CONFIGURATION
N.T.S. DSA-3C-1500_A

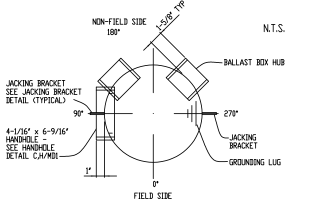
NON-FIELD SIDE
180°
1-5/8" TYP (3)
N.T.S.
BALLAST BOX HUB
JACKING BRACKET
SEE JACKING BRACKET
DETAIL (TYPICAL)
90°
270°
4-1/16" x 6-9/16"
HANDHOLE -
SEE HANDHOLE
DETAIL C,H/MD1
JACKING
BRACKET
GROUNDING LUG
1"
0°
FIELD SIDE

POLE ORIENTATION
N.T.S.

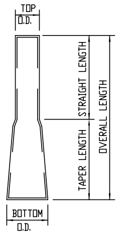
TOP
O.D.
STRAIGHT LENGTH
TAPER LENGTH
OVERALL LENGTH
BOTTOM
O.D.

FIXTURE MOUNTING POLE SECTION

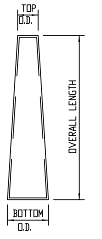
TOP
O.D.
OVERALL LENGTH
BOTTOM
O.D.

TOP/MIDDLE/BOTTOM POLE SECTION

1. CONTAINS COMBINED EPA OF LIGHT FIXTURES, CROSS ARM AND MISCELLANEOUS FIXTURE MOUNTING APPARATUS.

FIXTURE WEIGHT 58.2 LBS. THIS INCLUDES THE WEIGHT OF FIXTURE, CROSS ARM & MISC. MOUNTING APPARATUS. ELECTRICAL BALLAST BOX WEIGHT 20 LBS PER FIXTURE SERVICED

POLE SCHEDULE

SITE LOCATION	POLE MARK	REFERENCE LOCATION	POLE TYPE	FIXTURE CONFIGURATION	TOTAL EPA[1]	BALLAST BOX REQUIREMENTS
SEE SITE PLAN (BY OTHERS)	A3-A4	SEE POLE ORIENTATION PLAN	LSS70A	5 - SEE DETAIL B/MS3	13.93 SQ. FT.	SEE DETAIL SL/MD1
	C1	SEE POLE ORIENTATION PLAN	LSS70A	3 - SEE DETAIL D/MS3		SEE DETAIL P/MD1
	C2	SEE POLE ORIENTATION PLAN	LSS70A	3 - SEE DETAIL D/MS3		SEE DETAIL P,O/MD1
	D1-D2	SEE POLE ORIENTATION PLAN	LSS70A	4 - SEE DETAIL C/MS3		SEE DETAIL RL/MD1

DSA-POLESCHE_C

POLE DATA TABLE

POLE TYPE	PIECE MARK	MAX NUMBER of X-Arms	POLE SECTION	TOP O.D. (INCHES)	BTM. O.D. (INCHES)	OVERALL LENGTH	STRAIGHT LENGTH	TAPER LENGTH	THICKNESS (INCHES)	TOP OF STEEL NOMINAL	ASTM REFERENCE
LSS70A	LS-2000	1	FIXTURE MOUNTING	4.750"	5.081"	5'-3"	3'-7"	1'-8"	.120	70'-1 3/4"	A513 (Fy=38ksi)
	MP-1TOSA		#2	4.596"	9.630"	35'-11 1/2"	-----	35'-11 1/2"	.120	-----	A595A (Fy=55 ksi) or A572, Gr 55 or 65
	MP-3BT-D		#1	8.886"	13.400"	32'-2 7/8"		32'-2 7/8"	.179		A595A (Fy=55 ksi) or A572, Gr 55 or 65
	MP-3BDSA		PRECAST BASE	FOR PRECAST MEMBER PROPERTIES SEE PRECAST BASE DETAIL A/-							

DSA-70ADT_J

IDENTIFICATION STAMP
DIV. OF THE STATE ARCHITECT
APP: 02-123587 INC:
REVIEWED FOR
SS ☑ FLS ☑ ACS ☑
DATE: 01/16/2026

Lodi High School
FIELD LIGHTING
Lodi, CA

No. 4506
Exp. 6-30-27

CONSULTANT
rtm
engineering consultants
1 Ada, Suite 100, Irvine, CA 92618
Tel (949) 462-3200
WWW.RTMEC.COM
RTM JOB NO.: 463.779

MUSCO Lighting
CORPORATE OFFICE:
P.O. Box 808
100 1st Avenue West
Oskaloosa, Iowa 52577
800/825-6020

DRAWING TITLE: POLE DETAIL
SCALE: SEE PLAN
REVISIONS:
REFERENCE:

PROJECT NO. 247112

DATE: 09/18/2025

DRAWN BY: W.Isiminger

DRAWING NO. MS3
4 OF 10

DSA-70_A

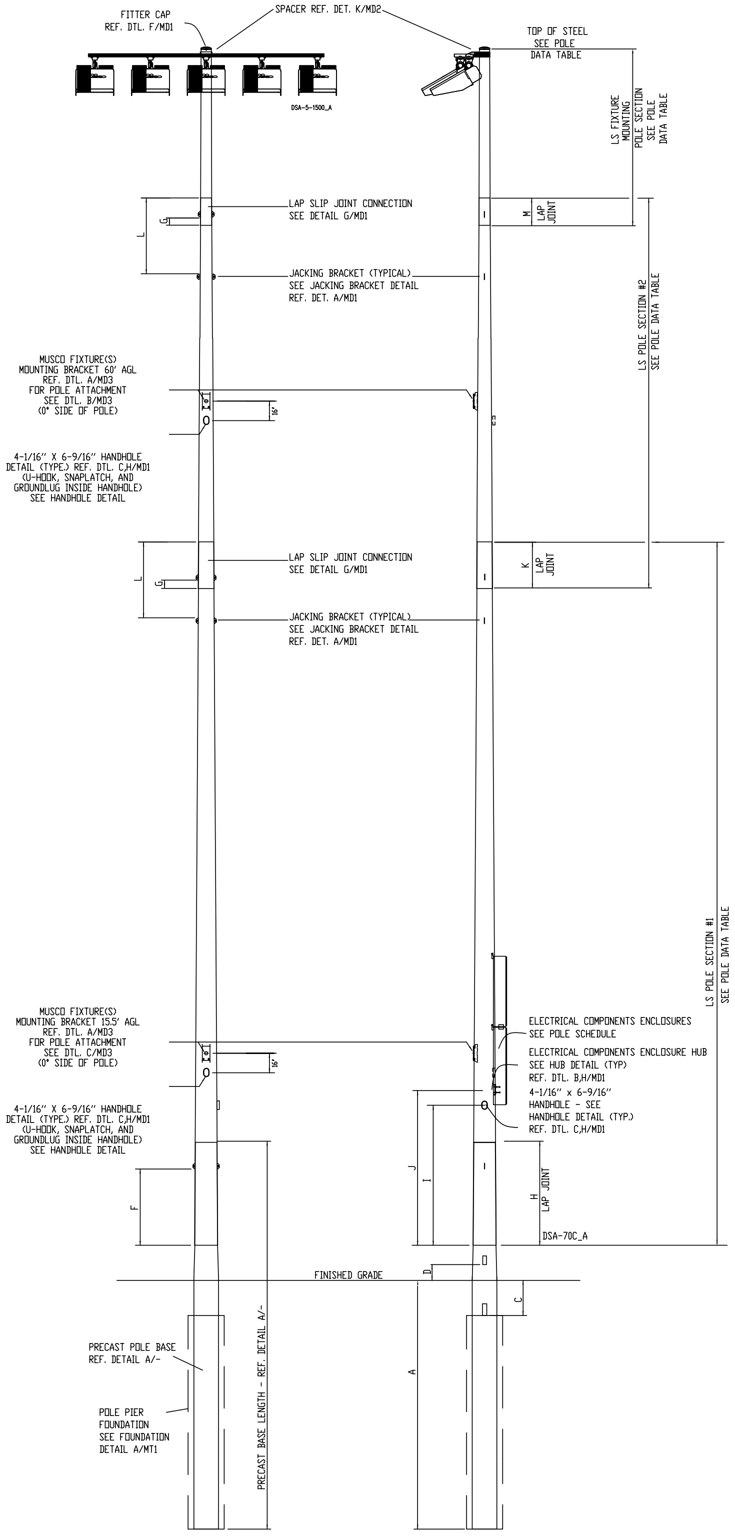
FITTER CAP
REF. DTL. F/MD1
SPACER REF. DET. K/MD2
DSA-5-1500_A
TOP OF STEEL
SEE POLE
DATA TABLE
LS FIXTURE MOUNTING POLE SECTION SEE POLE DATA TABLE
LAP SLIP JOINT CONNECTION
SEE DETAIL G/MD1
L
G
M
LAP JOINT
JACKING BRACKET (TYPICAL)
SEE JACKING BRACKET DETAIL
REF. DET. A/MD1
LS POLE SECTION #2
SEE POLE DATA TABLE
MUSCO FIXTURE(S)
MOUNTING BRACKET 60' AGL
REF. DTL. A/MD3
FOR POLE ATTACHMENT
SEE DTL. B/MD3
(0° SIDE OF POLE)
16'
4-1/16" X 6-9/16" HANDHOLE
DETAIL (TYPE.) REF. DTL. C,H/MD1
(U-HOOK, SNAPLATCH, AND
GROUNDLUG INSIDE HANDHOLE)
SEE HANDHOLE DETAIL
LAP SLIP JOINT CONNECTION
SEE DETAIL G/MD1
K
LAP JOINT
JACKING BRACKET (TYPICAL)
SEE JACKING BRACKET DETAIL
REF. DET. A/MD1
LS POLE SECTION #1
SEE POLE DATA TABLE
MUSCO FIXTURE(S)
MOUNTING BRACKET 15.5' AGL
REF. DTL. A/MD3
FOR POLE ATTACHMENT
SEE DTL. C/MD3
(0° SIDE OF POLE)
16'
ELECTRICAL COMPONENTS ENCLOSURES
SEE POLE SCHEDULE
ELECTRICAL COMPONENTS ENCLOSURE HUB
SEE HUB DETAIL (TYP)
REF. DTL. B,H/MD1
4-1/16" x 6-9/16"
HANDHOLE - SEE
HANDHOLE DETAIL (TYP.)
REF. DTL. C,H/MD1
4-1/16" X 6-9/16" HANDHOLE
DETAIL (TYPE.) REF. DTL. C,H/MD1
(U-HOOK, SNAPLATCH, AND
GROUNDLUG INSIDE HANDHOLE)
SEE HANDHOLE DETAIL
F
J
I
H
LAP JOINT
DSA-70C_A
FINISHED GRADE
D
C
A
PRECAST POLE BASE
REF. DETAIL A/-
POLE PIER
FOUNDATION
SEE FOUNDATION
DETAIL A/MT1
PRECAST BASE LENGTH - REF. DETAIL A/-

LSS70C POLE FRONT VIEW
N.T.S.

LSS70C POLE SIDE VIEW
N.T.S. DSA-70CBASE_A

NOTATION	DIMENSION
	LSS70C
A	14'-0"
C	2'-0" NOM.
D	1'-0" NOM.
F	4'-4" NOM.
G	1'-6"
H	5'-10 1/4" NOM. 5'-3 3/4" MIN.
I	7'-7 1/2" NOM.
J	8'-9 1/2" NOM.
K	3'-5 5/8" NOM. 2'-1 1/4" MIN.
L	4'-7" NOM.
M	2'-0" NOM. 1'-5 1/2" MIN.

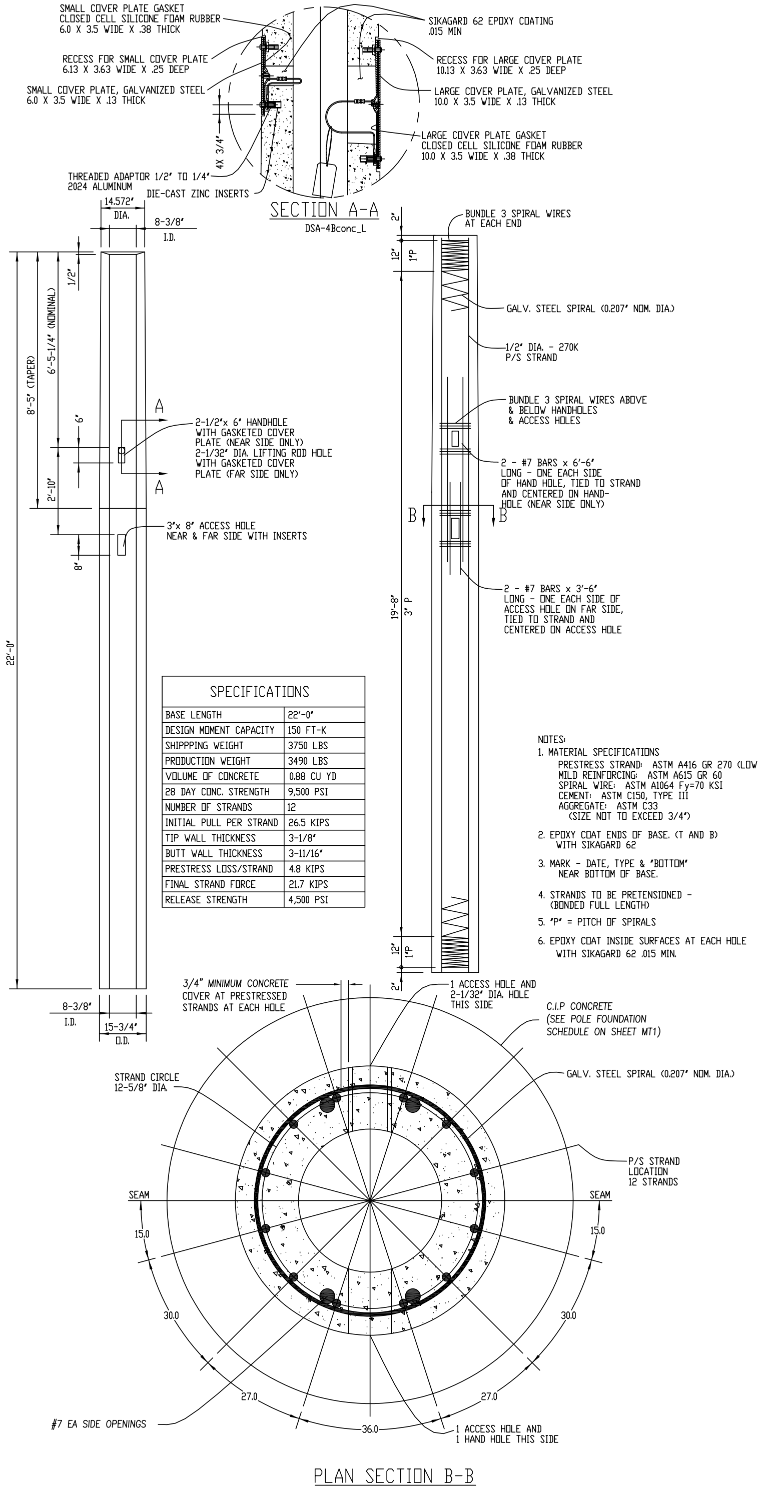
SMALL COVER PLATE GASKET
CLOSED CELL SILICONE FOAM RUBBER
6.0 X 3.5 WIDE X .38 THICK
RECESS FOR SMALL COVER PLATE
6.13 X 3.63 WIDE X .25 DEEP
SMALL COVER PLATE, GALVANIZED STEEL
6.0 X 3.5 WIDE X .13 THICK
4X 3/4"
THREADED ADAPTOR 1/2" TO 1/4"
2024 ALUMINUM
DIE-CAST ZINC INSERTS
SIKAGARD 62 EPOXY COATING
.015 MIN
RECESS FOR LARGE COVER PLATE
10.13 X 3.63 WIDE X .25 DEEP
LARGE COVER PLATE, GALVANIZED STEEL
10.0 X 3.5 WIDE X .13 THICK
LARGE COVER PLATE GASKET
CLOSED CELL SILICONE FOAM RUBBER
10.0 X 3.5 WIDE X .38 THICK
SECTION A-A
DSA-4Bconc_L
14.572"
DIA.
8-3/8"
I.D.
1/2"
8'-5" (TAPER)
6'-5-1/4" (NOMINAL)
6"
2'-10"
8"
22'-0"
A
A
2-1/2"x 6" HANDHOLE
WITH GASKETED COVER
PLATE (NEAR SIDE ONLY)
2-1/32" DIA. LIFTING ROD HOLE
WITH GASKETED COVER
PLATE (FAR SIDE ONLY)
3"x 8" ACCESS HOLE
NEAR & FAR SIDE WITH INSERTS
8-3/8"
I.D.
15-3/4"
O.D.
2"
12"
1"P
BUNDLE 3 SPIRAL WIRES
AT EACH END
GALV. STEEL SPIRAL (0.207" NOM. DIA.)
1/2" DIA. - 270K
P/S STRAND
BUNDLE 3 SPIRAL WIRES ABOVE
& BELOW HANDHOLES
& ACCESS HOLES
2 - #7 BARS x 6'-6"
LONG - ONE EACH SIDE
OF HAND HOLE, TIED TO STRAND
AND CENTERED ON HAND-
HOLE (NEAR SIDE ONLY)
B
B
2 - #7 BARS x 3'-6"
LONG - ONE EACH SIDE OF
ACCESS HOLE ON FAR SIDE,
TIED TO STRAND AND
CENTERED ON ACCESS HOLE
19'-8"
3" P
12"
1"P
2"
3/4" MINIMUM CONCRETE
COVER AT PRESTRESSED
STRANDS AT EACH HOLE
1 ACCESS HOLE AND
2-1/32" DIA. HOLE
THIS SIDE
C.I.P CONCRETE
(SEE POLE FOUNDATION
SCHEDULE ON SHEET MT1)
STRAND CIRCLE
12-5/8" DIA.
GALV. STEEL SPIRAL (0.207" NOM. DIA.)
P/S STRAND
LOCATION
12 STRANDS
SEAM
SEAM
15.0
15.0
30.0
30.0
27.0
27.0
36.0
#7 EA SIDE OPENINGS
1 ACCESS HOLE AND
1 HAND HOLE THIS SIDE

SPECIFICATIONS	
BASE LENGTH	22'-0"
DESIGN MOMENT CAPACITY	150 FT-K
SHIPPPING WEIGHT	3750 LBS
PRODUCTION WEIGHT	3490 LBS
VOLUME OF CONCRETE	0.88 CU YD
28 DAY CONC. STRENGTH	9,500 PSI
NUMBER OF STRANDS	12
INITIAL PULL PER STRAND	26.5 KIPS
TIP WALL THICKNESS	3-1/8"
BUTT WALL THICKNESS	3-11/16"
PRESTRESS LOSS/STRAND	4.8 KIPS
FINAL STRAND FORCE	21.7 KIPS
RELEASE STRENGTH	4,500 PSI

NOTES:

1. MATERIAL SPECIFICATIONS
   PRESTRESS STRAND: ASTM A416 GR 270 (LOW RELAXATION)
   MILD REINFORCING: ASTM A615 GR 60
   SPIRAL WIRE: ASTM A1064 Fy=70 KSI
   CEMENT: ASTM C150, TYPE III
   AGGREGATE: ASTM C33
   (SIZE NOT TO EXCEED 3/4")
2. EPOXY COAT ENDS OF BASE. (T AND B) WITH SIKAGARD 62
3. MARK - DATE, TYPE & "BOTTOM" NEAR BOTTOM OF BASE.
4. STRANDS TO BE PRETENSIONED - (BONDED FULL LENGTH)
5. "P" = PITCH OF SPIRALS
6. EPOXY COAT INSIDE SURFACES AT EACH HOLE WITH SIKAGARD 62 .015 MIN.

PLAN SECTION B-B

A TYPE 4B PRECAST BASE DETAIL
N.T.S. DSA-4Bconc_L

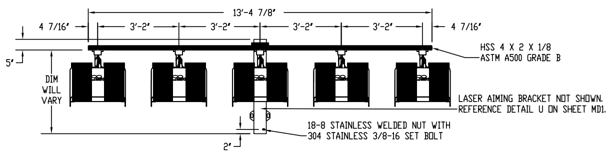
13'-4 7/8"
4 7/16"
3'-2"
3'-2"
3'-2"
3'-2"
4 7/16"
5"
DIM WILL VARY
2"
HSS 4 X 2 X 1/8
ASTM A500 GRADE B
LASER AIMING BRACKET NOT SHOWN.
REFERENCE DETAIL U ON SHEET MD1.
18-8 STAINLESS WELDED NUT WITH
304 STAINLESS 3/8-16 SET BOLT

B 5 FIXTURE CONFIGURATION
N.T.S. DSA-5C-1500_A

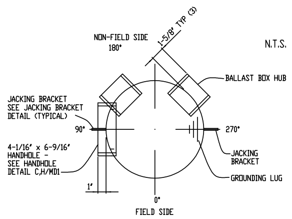
NON-FIELD SIDE
180°
1-5/8" TYP (3)
N.T.S.
BALLAST BOX HUB
JACKING BRACKET
SEE JACKING BRACKET
DETAIL (TYPICAL)
90°
270°
4-1/16" x 6-9/16"
HANDHOLE -
SEE HANDHOLE
DETAIL C,H/MD1
JACKING
BRACKET
GROUNDING LUG
1"
0°
FIELD SIDE

POLE ORIENTATION
N.T.S.

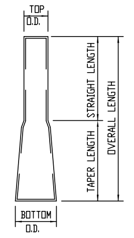
TOP
O.D.
STRAIGHT LENGTH
TAPER LENGTH
OVERALL LENGTH
BOTTOM
O.D.

FIXTURE MOUNTING POLE SECTION

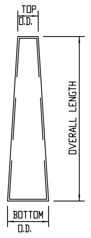
TOP
O.D.
OVERALL LENGTH
BOTTOM
O.D.

TOP/MIDDLE/BOTTOM POLE SECTION

1. CONTAINS COMBINED EPA OF LIGHT FIXTURES, CROSS ARM AND MISCELLANEOUS FIXTURE MOUNTING APPARATUS.

FIXTURE WEIGHT 74.4 LBS. THIS INCLUDES THE WEIGHT OF FIXTURE, CROSS ARM & MISC. MOUNTING APPARATUS. ELECTRICAL BALLAST BOX WEIGHT 20 LBS PER FIXTURE SERVICED

POLE SCHEDULE

SITE LOCATION	POLE MARK	REFERENCE LOCATION	POLE TYPE	FIXTURE CONFIGURATION	TOTAL EPA[1]	BALLAST BOX REQUIREMENTS
SEE SITE PLAN (BY OTHERS)	B1-B2	SEE POLE ORIENTATION PLAN	LSS70C	5 - SEE DETAIL B/MS4	18.43 SQ. FT.	SEE DETAIL SL,O/MD1

DSA-POLESCHE_C

POLE DATA TABLE

POLE TYPE	PIECE MARK	MAX NUMBER of X-Arms	POLE SECTION	TOP O.D. (INCHES)	BTM. O.D. (INCHES)	OVERALL LENGTH	STRAIGHT LENGTH	TAPER LENGTH	THICKNESS (INCHES)	TOP OF STEEL NOMINAL	ASTM REFERENCE
LSS70C	LS-2013	1	FIXTURE MOUNTING	7.000"	7.548"	5'-3"	3'-3"	2'-0"	.125	70'-4"	A513 (Fy=38ksi)
	MP-4TTDSA-11		#2	6.980"	10.940"	28'-3 3/8"		28'-3 3/8"	.179		A595A (Fy=55 ksi) or A572, Gr 55 or 65
	MP-5BT-D		#1	10.096"	15.750"	40'-4 5/8"		40'-4 5/8"	.179		A595A (Fy=55 ksi) or A572, Gr 55 or 65
	MP-4BDSA		PRECAST BASE	FOR PRECAST MEMBER PROPERTIES SEE PRECAST BASE DETAIL A/-							

DSA-70CDT_J

IDENTIFICATION STAMP
DIV. OF THE STATE ARCHITECT
APP: 02-123587 INC:
REVIEWED FOR
SS ☑ FLS ☑ ACS ☑
DATE: 01/16/2026

Lodi High School
FIELD LIGHTING
Lodi, CA

No. 4506
Exp. 6-30-27

CONSULTANT
rtm
engineering consultants
1 Ada, Suite 100, Irvine, CA 92618
Tel (949) 462-3200
WWW.RTMEC.COM
RTM JOB NO.: 463.779

musco Lighting
CORPORATE OFFICE:
P.O. Box 808
100 1st Avenue West
Oskaloosa, Iowa 52577
800/825-6020

DRAWING TITLE:
POLE DETAIL
SCALE: SEE PLAN
REVISIONS:
REFERENCE:

PROJECT NO. 247112

DATE: 09/18/2025

DRAWN BY: W.Isiminger

DRAWING NO. MS4
5 OF 10

DSA-70_A

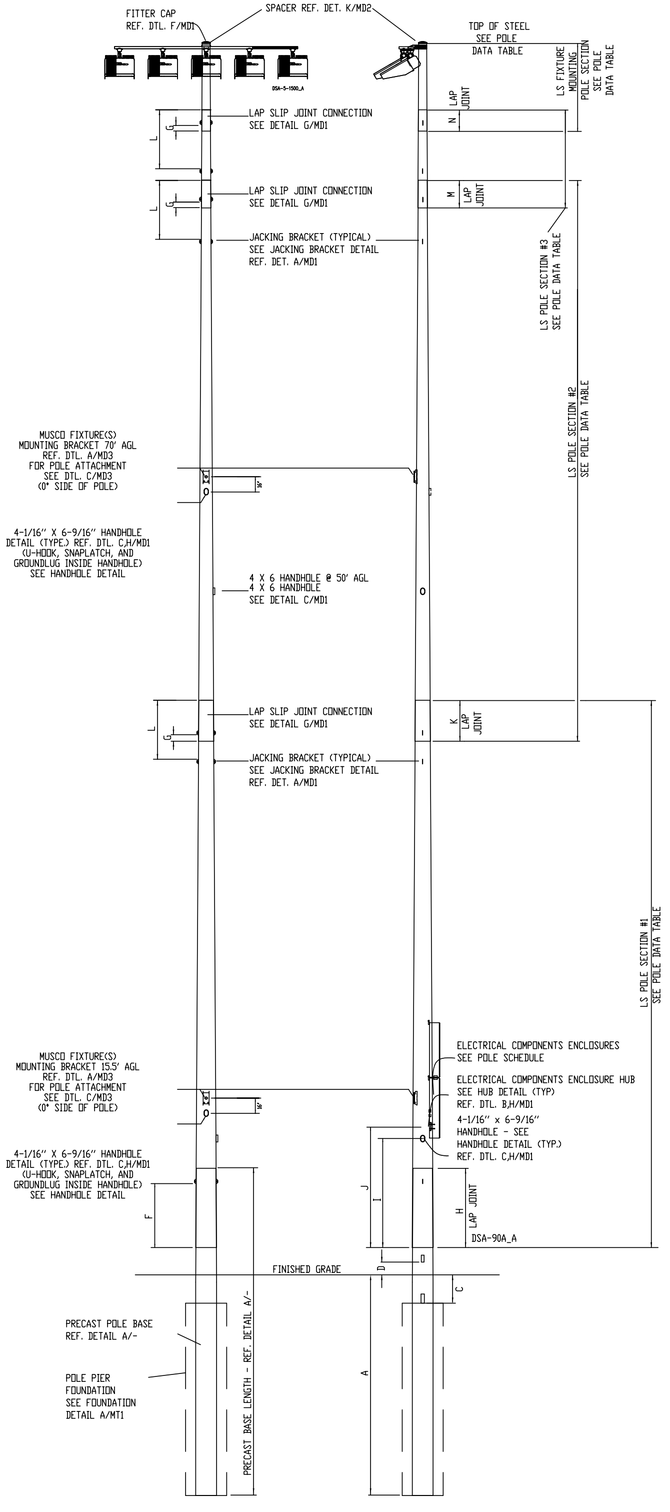
FITTER CAP
REF. DTL. F/MD1
SPACER REF. DET. K/MD2
DSA-5-1500_A
TOP OF STEEL
SEE POLE
DATA TABLE
LS FIXTURE MOUNTING POLE SECTION SEE POLE DATA TABLE
LAP SLIP JOINT CONNECTION
SEE DETAIL G/MD1
L
G
N
LAP JOINT
M
LAP JOINT
JACKING BRACKET (TYPICAL)
SEE JACKING BRACKET DETAIL
REF. DET. A/MD1
LS POLE SECTION #3
SEE POLE DATA TABLE
LS POLE SECTION #2
SEE POLE DATA TABLE
MUSCO FIXTURE(S)
MOUNTING BRACKET 70' AGL
REF. DTL. A/MD3
FOR POLE ATTACHMENT
SEE DTL. C/MD3
(0° SIDE OF POLE)
16'
4-1/16" X 6-9/16" HANDHOLE
DETAIL (TYPE.) REF. DTL. C,H/MD1
(U-HOOK, SNAPLATCH, AND
GROUNDLUG INSIDE HANDHOLE)
SEE HANDHOLE DETAIL
4 X 6 HANDHOLE @ 50' AGL
4 X 6 HANDHOLE
SEE DETAIL C/MD1
LAP SLIP JOINT CONNECTION
SEE DETAIL G/MD1
K
LAP JOINT
JACKING BRACKET (TYPICAL)
SEE JACKING BRACKET DETAIL
REF. DET. A/MD1
LS POLE SECTION #1
SEE POLE DATA TABLE
ELECTRICAL COMPONENTS ENCLOSURES
SEE POLE SCHEDULE
ELECTRICAL COMPONENTS ENCLOSURE HUB
SEE HUB DETAIL (TYP)
REF. DTL. B,H/MD1
4-1/16" x 6-9/16"
HANDHOLE - SEE
HANDHOLE DETAIL (TYP.)
REF. DTL. C,H/MD1
MUSCO FIXTURE(S)
MOUNTING BRACKET 15.5' AGL
REF. DTL. A/MD3
FOR POLE ATTACHMENT
SEE DTL. C/MD3
(0° SIDE OF POLE)
4-1/16" X 6-9/16" HANDHOLE
DETAIL (TYPE.) REF. DTL. C,H/MD1
(U-HOOK, SNAPLATCH, AND
GROUNDLUG INSIDE HANDHOLE)
SEE HANDHOLE DETAIL
F
J
I
H
LAP JOINT
DSA-90A_A
D
C
FINISHED GRADE
PRECAST POLE BASE
REF. DETAIL A/-
POLE PIER
FOUNDATION
SEE FOUNDATION
DETAIL A/MT1
PRECAST BASE LENGTH - REF. DETAIL A/-
A

LSS90A POLE FRONT VIEW
N.T.S.

LSS90A POLE SIDE VIEW
N.T.S. DSA-90ABASE_A

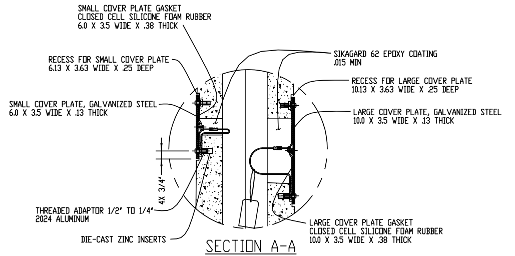
SMALL COVER PLATE GASKET
CLOSED CELL SILICONE FOAM RUBBER
6.0 X 3.5 WIDE X .38 THICK
RECESS FOR SMALL COVER PLATE
6.13 X 3.63 WIDE X .25 DEEP
SMALL COVER PLATE, GALVANIZED STEEL
6.0 X 3.5 WIDE X .13 THICK
4X 3/4"
THREADED ADAPTOR 1/2" TO 1/4"
2024 ALUMINUM
DIE-CAST ZINC INSERTS
SIKAGARD 62 EPOXY COATING
.015 MIN
RECESS FOR LARGE COVER PLATE
10.13 X 3.63 WIDE X .25 DEEP
LARGE COVER PLATE, GALVANIZED STEEL
10.0 X 3.5 WIDE X .13 THICK
LARGE COVER PLATE GASKET
CLOSED CELL SILICONE FOAM RUBBER
10.0 X 3.5 WIDE X .38 THICK

SECTION A-A
DSA-5Bconc_M

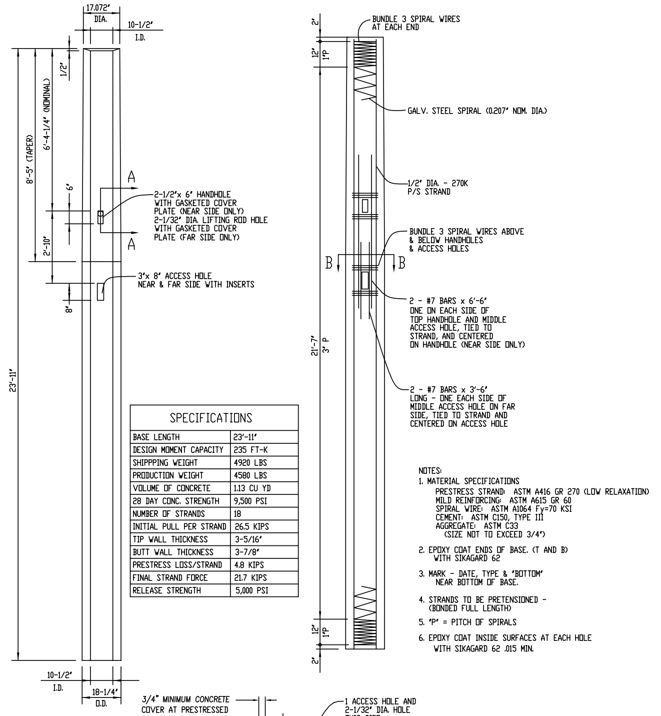
17.072"
DIA.
10-1/2"
I.D.
1/2"
8'-5" (TAPER)
6'-4-1/4" (NOMINAL)
6"
2'-10"
8"
23'-11"
A
A
2-1/2"x 6" HANDHOLE
WITH GASKETED COVER
PLATE (NEAR SIDE ONLY)
2-1/32" DIA. LIFTING ROD HOLE
WITH GASKETED COVER
PLATE (FAR SIDE ONLY)
3"x 8" ACCESS HOLE
NEAR & FAR SIDE WITH INSERTS
10-1/2"
I.D.
18-1/4"
O.D.
2"
12"
1"P
BUNDLE 3 SPIRAL WIRES
AT EACH END
GALV. STEEL SPIRAL (0.207" NOM. DIA.)
1/2" DIA. - 270K
P/S STRAND
BUNDLE 3 SPIRAL WIRES ABOVE
& BELOW HANDHOLES
& ACCESS HOLES
B
B
2 - #7 BARS x 6'-6"
ONE ON EACH SIDE OF
TOP HANDHOLE AND MIDDLE
ACCESS HOLE, TIED TO
STRAND, AND CENTERED
ON HANDHOLE (NEAR SIDE ONLY)
21'-7"
3" P
2 - #7 BARS x 3'-6"
LONG - ONE EACH SIDE OF
MIDDLE ACCESS HOLE ON FAR
SIDE, TIED TO STRAND AND
CENTERED ON ACCESS HOLE
12"
1"P
2"

SPECIFICATIONS	
BASE LENGTH	23'-11"
DESIGN MOMENT CAPACITY	235 FT-K
SHIPPPING WEIGHT	4920 LBS
PRODUCTION WEIGHT	4580 LBS
VOLUME OF CONCRETE	1.13 CU YD
28 DAY CONC. STRENGTH	9,500 PSI
NUMBER OF STRANDS	18
INITIAL PULL PER STRAND	26.5 KIPS
TIP WALL THICKNESS	3-5/16"
BUTT WALL THICKNESS	3-7/8"
PRESTRESS LOSS/STRAND	4.8 KIPS
FINAL STRAND FORCE	21.7 KIPS
RELEASE STRENGTH	5,000 PSI

NOTES:

1. MATERIAL SPECIFICATIONS
   PRESTRESS STRAND: ASTM A416 GR 270 (LOW RELAXATION)
   MILD REINFORCING: ASTM A615 GR 60
   SPIRAL WIRE: ASTM A1064 Fy=70 KSI
   CEMENT: ASTM C150, TYPE III
   AGGREGATE: ASTM C33
   (SIZE NOT TO EXCEED 3/4")
2. EPOXY COAT ENDS OF BASE. (T AND B) WITH SIKAGARD 62
3. MARK - DATE, TYPE & "BOTTOM" NEAR BOTTOM OF BASE.
4. STRANDS TO BE PRETENSIONED - (BONDED FULL LENGTH)
5. "P" = PITCH OF SPIRALS
6. EPOXY COAT INSIDE SURFACES AT EACH HOLE WITH SIKAGARD 62 .015 MIN.

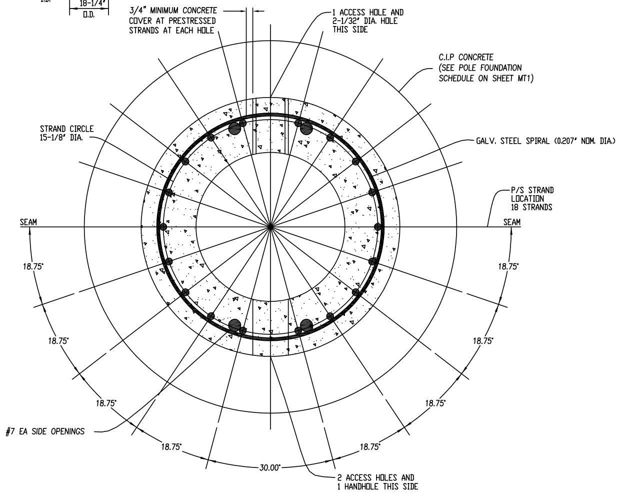
3/4" MINIMUM CONCRETE
COVER AT PRESTRESSED
STRANDS AT EACH HOLE
1 ACCESS HOLE AND
2-1/32" DIA. HOLE
THIS SIDE
C.I.P CONCRETE
(SEE POLE FOUNDATION
SCHEDULE ON SHEET MT1)
STRAND CIRCLE
15-1/8" DIA.
GALV. STEEL SPIRAL (0.207" NOM. DIA.)
P/S STRAND
LOCATION
18 STRANDS
SEAM
SEAM
18.75°
18.75°
18.75°
18.75°
18.75°
18.75°
18.75°
18.75°
30.00°
#7 EA SIDE OPENINGS
2 ACCESS HOLES AND
1 HANDHOLE THIS SIDE

PLAN SECTION B-B

Ⓐ TYPE 5B PRECAST BASE DETAIL

N.T.S. DSA-5Bconc_M

NOTATION	DIMENSION
	LSS90A
A	16'-0"
C	2'-0" NOM.
D	1'-0" NOM.
F	4'-8" NOM.
G	1'-6"
H	6'-1 1/2" NOM. 5'-3 3/4" MIN.
I	7'-11 1/2" NOM.
J	9'-1 1/2" NOM.
K	3'-11 1/4" NOM. 2'-7 5/8" MIN.
L	4'-11 1/2" NOM.
M	2'-8 5/8" NOM. 1'-7 1/2" MIN.
N	2'-0" NOM. 1'-5 1/2" MIN.

POLE DATA TABLE

POLE TYPE	PIECE MARK	MAX NUMBER of X-Arms	POLE SECTION	TOP O.D. (INCHES)	BTM. O.D. (INCHES)	OVERALL LENGTH	STRAIGHT LENGTH	TAPER LENGTH	THICKNESS (INCHES)	TOP OF STEEL NOMINAL	ASTM REFERENCE
LSS90A	LS-2013	1	FIXTURE MOUNTING	7.000"	7.548"	5'-3"	3'-3"	2'-0"	.125	91'-6 3/8"	A513 (Fy=38ksi)
	MP-2TTDSA-2		#3	6.980"	8.520"	11'-0"		11'-0"	.179		A595A (Fy=55 ksi) or A572, Gr 55 or 65
	MP-4BTDSA		#2	7.781"	13.582"	41'-5 1/4"	-----	41'-5 1/4"	.179	-----	A595A (Fy=55 ksi) or A572, Gr 55 or 65
	MP-6BTDSA-D		#1	12.672"	18.407"	40'-11 5/8"	-----	40'-11 5/8"	.239	-----	A595A (Fy=55 ksi) or A572, Gr 55 or 65
	MP-5BDSA		PRECAST BASE	FOR PRECAST MEMBER PROPERTIES SEE PRECAST BASE DETAIL A/-							

DSA-90ADT_J

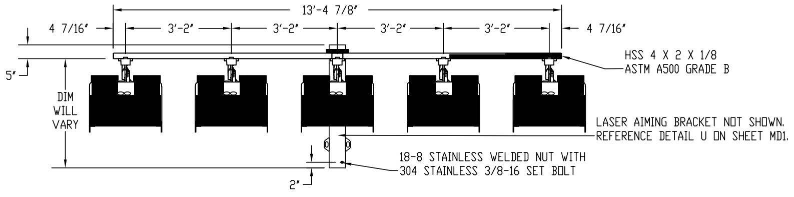
13'-4 7/8"
4 7/16"
3'-2"
3'-2"
3'-2"
3'-2"
4 7/16"
5"
DIM
WILL
VARY
HSS 4 X 2 X 1/8
ASTM A500 GRADE B
LASER AIMING BRACKET NOT SHOWN.
REFERENCE DETAIL U ON SHEET MD1.
18-8 STAINLESS WELDED NUT WITH
304 STAINLESS 3/8-16 SET BOLT
2"

Ⓑ 5 FIXTURE CONFIGURATION

N.T.S. DSA-5C-1500_A

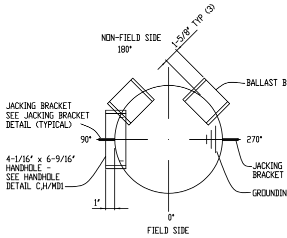
NON-FIELD SIDE
180°
1-5/8" TYP (3)
N.T.S.
BALLAST BOX HUB
JACKING BRACKET
SEE JACKING BRACKET
DETAIL (TYPICAL)
90°
270°
4-1/16" x 6-9/16"
HANDHOLE -
SEE HANDHOLE
DETAIL C,H/MD1
JACKING
BRACKET
GROUNDING LUG
1"
0°
FIELD SIDE

POLE ORIENTATION
N.T.S.

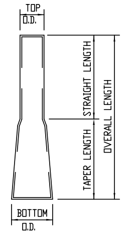
TOP
O.D.
STRAIGHT LENGTH
TAPER LENGTH
OVERALL LENGTH
BOTTOM
O.D.

FIXTURE MOUNTING POLE SECTION

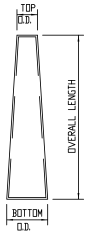
TOP
O.D.
OVERALL LENGTH
BOTTOM
O.D.

TOP/MIDDLE/BOTTOM POLE SECTION

1. CONTAINS COMBINED EPA OF LIGHT FIXTURES, CROSS ARM AND MISCELLANEOUS FIXTURE MOUNTING APPARATUS.

FIXTURE WEIGHT 79.8 LBS. THIS INCLUDES THE WEIGHT OF FIXTURE, CROSS ARM & MISC. MOUNTING APPARATUS. ELECTRICAL BALLAST BOX WEIGHT 20 LBS PER FIXTURE SERVICED

POLE SCHEDULE

SITE LOCATION	POLE MARK	REFERENCE LOCATION	POLE TYPE	FIXTURE CONFIGURATION	TOTAL EPA[1]	BALLAST BOX REQUIREMENTS
SEE SITE PLAN (BY OTHERS)	B3	SEE POLE ORIENTATION PLAN	LSS90A	5 - SEE DETAIL B/MS5	17.43 SQ. FT.	SEE DETAIL SL,O/MD1

DSA-POLESCHE_C

IDENTIFICATION STAMP
DIV. OF THE STATE ARCHITECT
APP: 02-123587 INC:
REVIEWED FOR
SS ☑ FLS ☑ ACS ☑
DATE: 01/16/2026

Lodi High School
FIELD LIGHTING
Lodi, CA

No. 4506
Exp. 6-30-27

CONSULTANT
rtm
engineering consultants
1 Ada, Suite 100, Irvine, CA 92618
Tel (949) 462-3200
WWW.RTMEC.COM
RTM JOB NO.: 463.779

musco Lighting
CORPORATE OFFICE:
P.O. Box 808
100 1st Avenue West
Oskaloosa, Iowa 52577
800/825-6020

DRAWING TITLE: POLE DETAIL
SCALE: SEE PLAN
REVISIONS:
REFERENCE:

PROJECT NO. 247112

DATE: 09/18/2025

DRAWN BY: W.Isiminger

DRAWING NO. MS5
6 OF 10

DSA-90_A

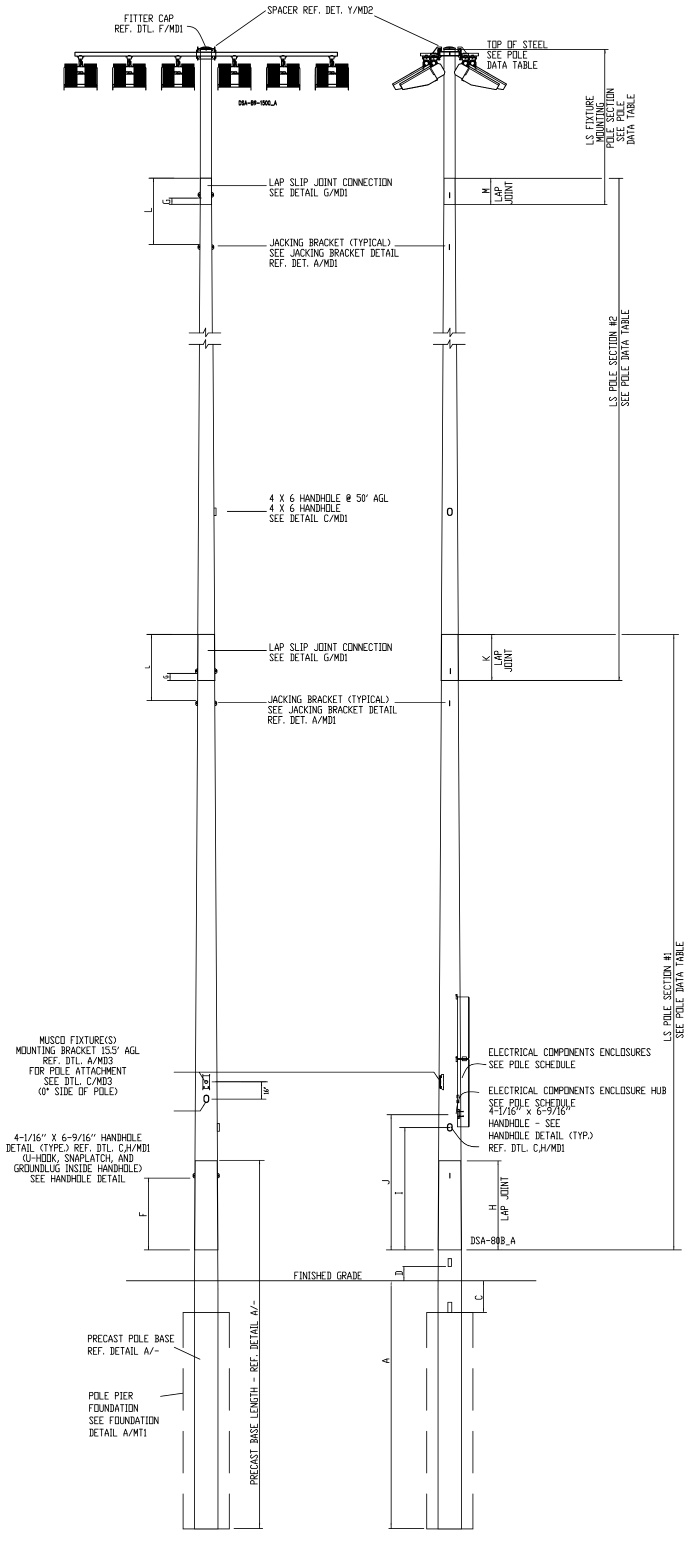
FITTER CAP
REF. DTL. F/MD1
SPACER REF. DET. Y/MD2
DSA-B9-1500_A
TOP OF STEEL
SEE POLE
DATA TABLE
LS FIXTURE MOUNTING POLE SECTION SEE POLE DATA TABLE
LAP SLIP JOINT CONNECTION
SEE DETAIL G/MD1
G
L
M
LAP JOINT
JACKING BRACKET (TYPICAL)
SEE JACKING BRACKET DETAIL
REF. DET. A/MD1
LS POLE SECTION #2
SEE POLE DATA TABLE
4 X 6 HANDHOLE @ 50' AGL
4 X 6 HANDHOLE
SEE DETAIL C/MD1
LAP SLIP JOINT CONNECTION
SEE DETAIL G/MD1
K
LAP JOINT
JACKING BRACKET (TYPICAL)
SEE JACKING BRACKET DETAIL
REF. DET. A/MD1
LS POLE SECTION #1
SEE POLE DATA TABLE
MUSCO FIXTURE(S)
MOUNTING BRACKET 15.5' AGL
REF. DTL. A/MD3
FOR POLE ATTACHMENT
SEE DTL. C/MD3
(0° SIDE OF POLE)
16"
ELECTRICAL COMPONENTS ENCLOSURES
SEE POLE SCHEDULE
ELECTRICAL COMPONENTS ENCLOSURE HUB
SEE POLE SCHEDULE
4-1/16" x 6-9/16"
HANDHOLE - SEE
HANDHOLE DETAIL (TYP.)
REF. DTL. C,H/MD1
4-1/16" X 6-9/16" HANDHOLE
DETAIL (TYPE.) REF. DTL. C,H/MD1
(U-HOOK, SNAPLATCH, AND
GROUNDLUG INSIDE HANDHOLE)
SEE HANDHOLE DETAIL
F
J
I
H
LAP JOINT
DSA-80B_A
FINISHED GRADE
D
C
A
PRECAST POLE BASE
REF. DETAIL A/-
POLE PIER
FOUNDATION
SEE FOUNDATION
DETAIL A/MT1
PRECAST BASE LENGTH - REF. DETAIL A/-

LSS80B POLE FRONT VIEW
N.T.S.

LSS80B POLE SIDE VIEW
N.T.S. DSA-80BBASE_A

NOTATION	DIMENSION
	LSS80B
A	16'-0"
C	2'-0" NOM.
D	1'-0" NOM.
F	4'-8" NOM.
G	1'-6"
H	6'-1 1/2" NOM. 5'-3 3/4" MIN.
I	7'-11 1/2" NOM.
J	9'-1 1/2" NOM.
K	3'-11 1/4" NOM. 2'-7 5/8" MIN.
L	4'-11 1/2" NOM.
M	2'-2" NOM. 1'-8 1/2" MIN.

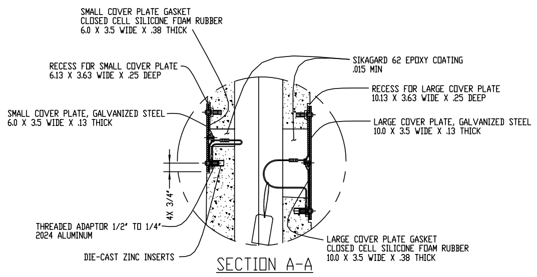
SMALL COVER PLATE GASKET
CLOSED CELL SILICONE FOAM RUBBER
6.0 X 3.5 WIDE X .38 THICK
RECESS FOR SMALL COVER PLATE
6.13 X 3.63 WIDE X .25 DEEP
SMALL COVER PLATE, GALVANIZED STEEL
6.0 X 3.5 WIDE X .13 THICK
4X 3/4"
THREADED ADAPTOR 1/2" TO 1/4"
2024 ALUMINUM
DIE-CAST ZINC INSERTS
SIKAGARD 62 EPOXY COATING
.015 MIN
RECESS FOR LARGE COVER PLATE
10.13 X 3.63 WIDE X .25 DEEP
LARGE COVER PLATE, GALVANIZED STEEL
10.0 X 3.5 WIDE X .13 THICK
LARGE COVER PLATE GASKET
CLOSED CELL SILICONE FOAM RUBBER
10.0 X 3.5 WIDE X .38 THICK

SECTION A-A
DSA-5Bconc_M

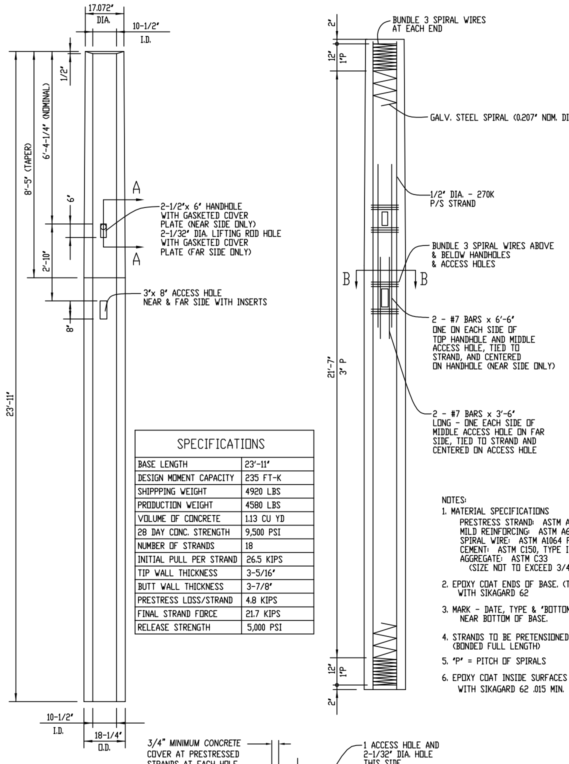
17.072"
DIA.
10-1/2"
I.D.
1/2"
8'-5" (TAPER)
6'-4-1/4" (NOMINAL)
6"
2'-10"
8"
23'-11"
A
A
2-1/2"x 6" HANDHOLE
WITH GASKETED COVER
PLATE (NEAR SIDE ONLY)
2-1/32" DIA. LIFTING ROD HOLE
WITH GASKETED COVER
PLATE (FAR SIDE ONLY)
3"x 8" ACCESS HOLE
NEAR & FAR SIDE WITH INSERTS
10-1/2"
I.D.
18-1/4"
O.D.
2"
12"
1"P
BUNDLE 3 SPIRAL WIRES
AT EACH END
GALV. STEEL SPIRAL (0.207" NOM. DIA.)
1/2" DIA. - 270K
P/S STRAND
BUNDLE 3 SPIRAL WIRES ABOVE
& BELOW HANDHOLES
& ACCESS HOLES
B
B
2 - #7 BARS x 6'-6"
ONE ON EACH SIDE OF
TOP HANDHOLE AND MIDDLE
ACCESS HOLE, TIED TO
STRAND, AND CENTERED
ON HANDHOLE (NEAR SIDE ONLY)
2 - #7 BARS x 3'-6"
LONG - ONE EACH SIDE OF
MIDDLE ACCESS HOLE ON FAR
SIDE, TIED TO STRAND AND
CENTERED ON ACCESS HOLE
21'-7"
3" P
12"
1"P
2"

SPECIFICATIONS	
BASE LENGTH	23'-11"
DESIGN MOMENT CAPACITY	235 FT-K
SHIPPPING WEIGHT	4920 LBS
PRODUCTION WEIGHT	4580 LBS
VOLUME OF CONCRETE	1.13 CU YD
28 DAY CONC. STRENGTH	9,500 PSI
NUMBER OF STRANDS	18
INITIAL PULL PER STRAND	26.5 KIPS
TIP WALL THICKNESS	3-5/16"
BUTT WALL THICKNESS	3-7/8"
PRESTRESS LOSS/STRAND	4.8 KIPS
FINAL STRAND FORCE	21.7 KIPS
RELEASE STRENGTH	5,000 PSI

NOTES:

1. MATERIAL SPECIFICATIONS
   PRESTRESS STRAND: ASTM A416 GR 270 (LOW RELAXATION)
   MILD REINFORCING: ASTM A615 GR 60
   SPIRAL WIRE: ASTM A1064 Fy=70 KSI
   CEMENT: ASTM C150, TYPE III
   AGGREGATE: ASTM C33
   (SIZE NOT TO EXCEED 3/4")
2. EPOXY COAT ENDS OF BASE. (T AND B) WITH SIKAGARD 62
3. MARK - DATE, TYPE & "BOTTOM" NEAR BOTTOM OF BASE.
4. STRANDS TO BE PRETENSIONED - (BONDED FULL LENGTH)
5. "P" = PITCH OF SPIRALS
6. EPOXY COAT INSIDE SURFACES AT EACH HOLE WITH SIKAGARD 62 .015 MIN.

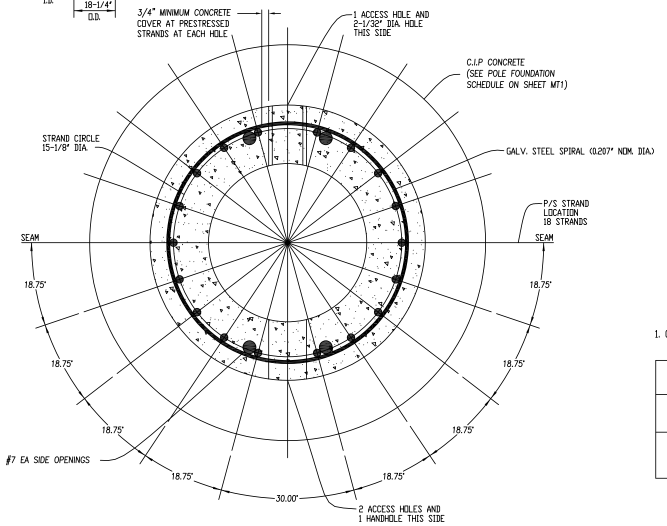
3/4" MINIMUM CONCRETE
COVER AT PRESTRESSED
STRANDS AT EACH HOLE
1 ACCESS HOLE AND
2-1/32" DIA. HOLE
THIS SIDE
C.I.P CONCRETE
(SEE POLE FOUNDATION
SCHEDULE ON SHEET MT1)
STRAND CIRCLE
15-1/8" DIA.
GALV. STEEL SPIRAL (0.207" NOM. DIA.)
P/S STRAND
LOCATION
18 STRANDS
SEAM
SEAM
18.75°
18.75°
18.75°
18.75°
18.75°
18.75°
18.75°
18.75°
30.00°
#7 EA SIDE OPENINGS
2 ACCESS HOLES AND
1 HANDHOLE THIS SIDE

PLAN SECTION B-B

Ⓐ TYPE 5B PRECAST BASE DETAIL
N.T.S. DSA-5Bconc_M

POLE DATA TABLE											
POLE TYPE	PIECE MARK	MAX NUMBER of X-Arms	POLE SECTION	TOP O.D. (INCHES)	BTM. O.D. (INCHES)	OVERALL LENGTH	STRAIGHT LENGTH	TAPER LENGTH	THICKNESS (INCHES)	TOP OF STEEL NOMINAL	ASTM REFERENCE
LSS80B	LS-2017	2	FIXTURE MOUNTING	8.000"	8.781"	5'-3"	3'-1"	2'-2"	.125	80'-1 7/8"	A513 (Fy=38ksi)
	MP-4BTTDSA-9		#2	8.190"	13.582"	38'-6 1/8"	-----	38'-6 1/8"	.179	-----	A595A (Fy=55 ksi) or A572, Gr 55 or 65
	MP-6BTDSA-D		#1	12.672"	18.407"	40'-11 5/8"	-----	40'-11 5/8"	.239	-----	A595A (Fy=55 ksi) or A572, Gr 55 or 65
	MP-5BDSA		PRECAST BASE				FOR PRECAST MEMBER PROPERTIES SEE PRECAST BASE DETAIL A/-				

DSA-80BDT_K

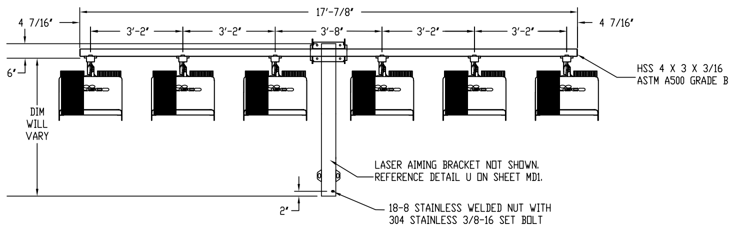
17'-7/8"
4 7/16"
3'-2"
3'-2"
3'-8"
3'-2"
3'-2"
4 7/16"
6"
DIM
WILL
VARY
HSS 4 X 3 X 3/16
ASTM A500 GRADE B
LASER AIMING BRACKET NOT SHOWN.
REFERENCE DETAIL U ON SHEET MD1.
2"
18-8 STAINLESS WELDED NUT WITH
304 STAINLESS 3/8-16 SET BOLT

Ⓑ 6 FIXTURE CONFIGURATION
N.T.S. DSA-B6C-1500_A

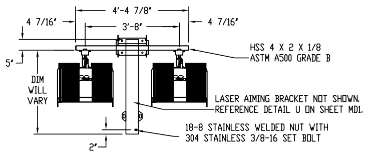
4'-4 7/8"
4 7/16"
3'-8"
4 7/16"
5"
DIM
WILL
VARY
HSS 4 X 2 X 1/8
ASTM A500 GRADE B
LASER AIMING BRACKET NOT SHOWN.
REFERENCE DETAIL U ON SHEET MD1.
2"
18-8 STAINLESS WELDED NUT WITH
304 STAINLESS 3/8-16 SET BOLT

Ⓒ 2 FIXTURE CONFIGURATION
N.T.S. DSA-B2C-1500_A

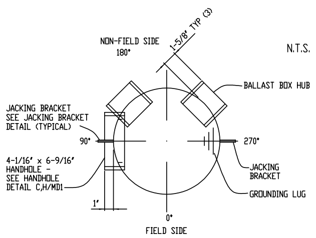
NON-FIELD SIDE
180°
1-5/8" TYP (3)
N.T.S.
BALLAST BOX HUB
JACKING BRACKET
SEE JACKING BRACKET
DETAIL (TYPICAL)
90°
270°
4-1/16" x 6-9/16"
HANDHOLE -
SEE HANDHOLE
DETAIL C,H/MD1
JACKING
BRACKET
GROUNDING LUG
1"
0°
FIELD SIDE

POLE ORIENTATION
N.T.S.

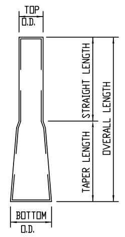
TOP
O.D.
STRAIGHT LENGTH
TAPER LENGTH
OVERALL LENGTH
BOTTOM
O.D.

FIXTURE MOUNTING
POLE SECTION

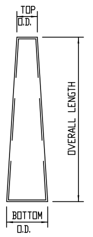
TOP
O.D.
OVERALL LENGTH
BOTTOM
O.D.

TOP/MIDDLE/BOTTOM
POLE SECTION

1. CONTAINS COMBINED EPA OF LIGHT FIXTURES, CROSS ARM AND MISCELLANEOUS FIXTURE MOUNTING APPARATUS.

FIXTURE WEIGHT 81.2 LBS. THIS INCLUDES THE WEIGHT OF FIXTURE, CROSS ARM & MISC. MOUNTING APPARATUS. ELECTRICAL BALLAST BOX WEIGHT 20 LBS PER FIXTURE SERVICED

POLE SCHEDULE						
SITE LOCATION	POLE MARK	REFERENCE LOCATION	POLE TYPE	FIXTURE CONFIGURATION	TOTAL EPA[1]	BALLAST BOX REQUIREMENTS
SEE SITE PLAN (BY OTHERS)	B4	SEE POLE ORIENTATION PLAN	LSS80B	6,2-SEE DETAIL B,C/MS6	25.27 SQ. FT.	SEE DETAIL TL,O/MD1

DSA-POLESCHE_C

IDENTIFICATION STAMP
DIV. OF THE STATE ARCHITECT
APP: 02-123587 INC:
REVIEWED FOR
SS ☑ FLS ☑ ACS ☑
DATE: 01/16/2026

Lodi High School
FIELD LIGHTING
Lodi, CA

JOSH RANDALL
No. 4506
Exp. 6-30-27

CONSULTANT
rtm
engineering consultants
1 Ada, Suite 100, Irvine, CA 92618
Tel (949) 462-3200
WWW.RTMEC.COM
RTM JOB NO.: 463.779

musco® Lighting
CORPORATE OFFICE:
P.O. Box 808
100 1st Avenue West
Oskaloosa, Iowa 52577
800/825-6020

DRAWING TITLE: POLE DETAIL
SCALE: SEE PLAN
REVISIONS:
REFERENCE:

PROJECT NO. 247112

DATE: 09/18/2025

DRAWN BY: W.Isiminger

DRAWING NO. MS6
7 OF 10

DSA-80_A

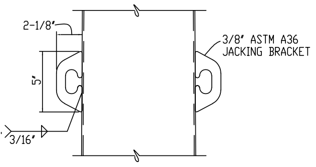
2-1/8″
5″
TYP.
3/16″
3/8″ ASTM A36
JACKING BRACKET

(A) JACKING BRACKET DETAIL
N.T.S. DSA-3RDSHEET_T

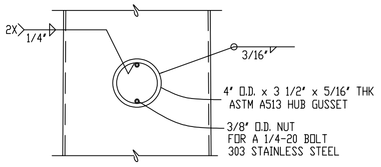
2X
1/4″
3/16″
4″ O.D. x 3 1/2″ x 5/16″ THK
ASTM A513 HUB GUSSET
3/8″ O.D. NUT
FOR A 1/4-20 BOLT
303 STAINLESS STEEL

(B) HUB DETAIL
N.T.S. DSA-3RDSHEET_T

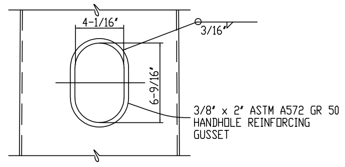
4-1/16″
3/16″
6-9/16″
3/8″ x 2″ ASTM A572 GR 50
HANDHOLE REINFORCING
GUSSET

(C) HANDHOLE SLEEVE DETAIL
N.T.S. DSA-3RDSHEET_T

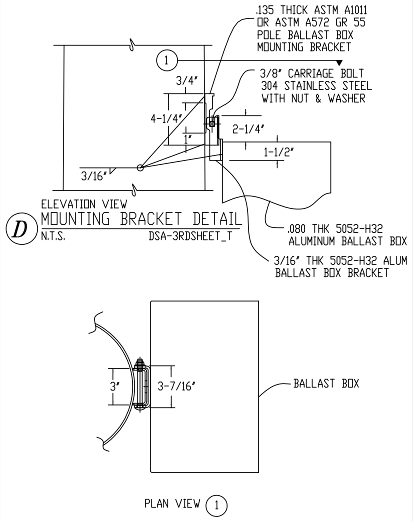
.135 THICK ASTM A1011
OR ASTM A572 GR 55
POLE BALLAST BOX
MOUNTING BRACKET
1
3/8″ CARRIAGE BOLT
304 STAINLESS STEEL
WITH NUT & WASHER
3/4″
4-1/4″
1″
2-1/4″
1-1/2″
3/16″
ELEVATION VIEW
.080 THK 5052-H32
ALUMINUM BALLAST BOX
3/16″ THK 5052-H32 ALUM
BALLAST BOX BRACKET
3″
3-7/16″
BALLAST BOX
PLAN VIEW 1

(D) MOUNTING BRACKET DETAIL
N.T.S. DSA-3RDSHEET_T

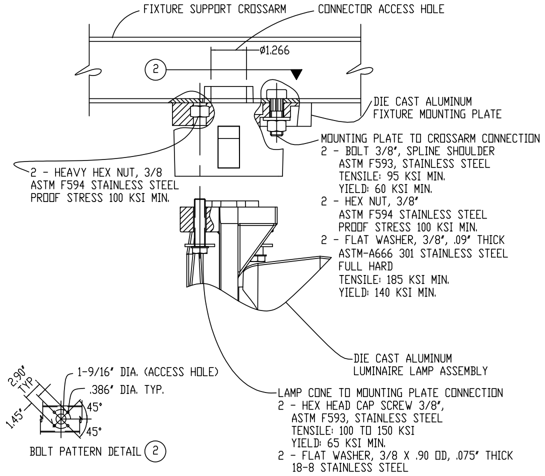
FIXTURE SUPPORT CROSSARM
CONNECTOR ACCESS HOLE
ø1.266
2
DIE CAST ALUMINUM
FIXTURE MOUNTING PLATE
MOUNTING PLATE TO CROSSARM CONNECTION
2 - BOLT 3/8″, SPLINE SHOULDER
ASTM F593, STAINLESS STEEL
TENSILE: 95 KSI MIN.
YIELD: 60 KSI MIN.
2 - HEX NUT, 3/8″
ASTM F594 STAINLESS STEEL
PROOF STRESS 100 KSI MIN.
2 - FLAT WASHER, 3/8″, .09″ THICK
ASTM-A666 301 STAINLESS STEEL
FULL HARD
TENSILE: 185 KSI MIN.
YIELD: 140 KSI MIN.
2 - HEAVY HEX NUT, 3/8
ASTM F594 STAINLESS STEEL
PROOF STRESS 100 KSI MIN.
DIE CAST ALUMINUM
LUMINAIRE LAMP ASSEMBLY
1-9/16″ DIA. (ACCESS HOLE)
.386″ DIA. TYP.
2.90″ TYP
1.45″
45°
45°
BOLT PATTERN DETAIL 2
LAMP CONE TO MOUNTING PLATE CONNECTION
2 - HEX HEAD CAP SCREW 3/8″,
ASTM F593, STAINLESS STEEL
TENSILE: 100 TO 150 KSI
YIELD: 65 KSI MIN.
2 - FLAT WASHER, 3/8 X .90 OD, .075″ THICK
18-8 STAINLESS STEEL

(E) LUMINAIRE ATTACHMENT DETAIL
N.T.S. DSA-3RDSHEET_T

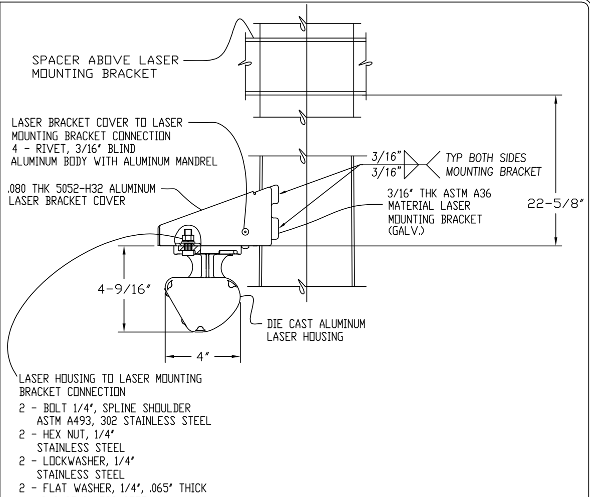
SPACER ABOVE LASER
MOUNTING BRACKET
LASER BRACKET COVER TO LASER
MOUNTING BRACKET CONNECTION
4 - RIVET, 3/16″ BLIND
ALUMINUM BODY WITH ALUMINUM MANDREL
.080 THK 5052-H32 ALUMINUM
LASER BRACKET COVER
3/16″
3/16″
TYP BOTH SIDES
MOUNTING BRACKET
3/16″ THK ASTM A36
MATERIAL LASER
MOUNTING BRACKET
(GALV.)
22-5/8″
4-9/16″
4″
DIE CAST ALUMINUM
LASER HOUSING
LASER HOUSING TO LASER MOUNTING
BRACKET CONNECTION
2 - BOLT 1/4″, SPLINE SHOULDER
ASTM A493, 302 STAINLESS STEEL
2 - HEX NUT, 1/4″
STAINLESS STEEL
2 - LOCKWASHER, 1/4″
STAINLESS STEEL
2 - FLAT WASHER, 1/4″, .065″ THICK
18-8 STAINLESS STEEL

(U) LASER AIMING BRACKET
N.T.S. DSA-3RDSHEET_T

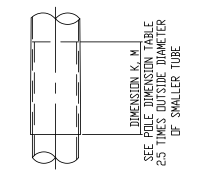
DIMENSION K, M
SEE POLE DIMENSION TABLE
2.5 TIMES OUTSIDE DIAMETER
OF SMALLER TUBE

(G) SLIP JOINT CONNECTION DETAIL
N.T.S. DSA-LAP

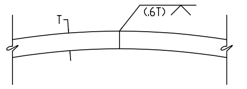

POLE LONGITUDINAL SEAM WELD DETAIL TYPICAL CONDITION *
N.T.S. DSA-3RDSHEET_T

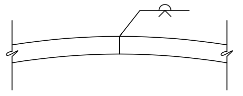

POLE LONGITUDINAL SEAM WELD DETAIL AT LAP SPLICES (FEMALE END) *
N.T.S. DSA-3RDSHEET_T

* NOTE- 100% PENETRATION SEAM WELDS MAY BE PROVIDED FULL LENGTH OF POLE SHAFTS PROVIDED WPS'S ARE QUALIFIED BY TEST.

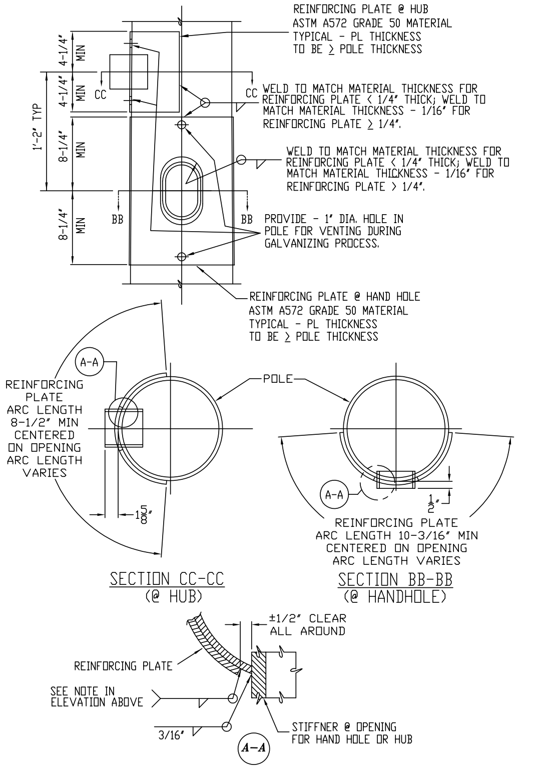
REINFORCING PLATE @ HUB
ASTM A572 GRADE 50 MATERIAL
TYPICAL - PL THICKNESS
TO BE ≥ POLE THICKNESS
4-1/4″ MIN
4-1/4″ MIN
1′-2″ TYP
8-1/4″ MIN
8-1/4″ MIN
CC
CC
WELD TO MATCH MATERIAL THICKNESS FOR REINFORCING PLATE < 1/4″ THICK; WELD TO MATCH MATERIAL THICKNESS - 1/16″ FOR REINFORCING PLATE ≥ 1/4″.
WELD TO MATCH MATERIAL THICKNESS FOR REINFORCING PLATE < 1/4″ THICK; WELD TO MATCH MATERIAL THICKNESS - 1/16″ FOR REINFORCING PLATE > 1/4″.
BB
BB
PROVIDE - 1″ DIA. HOLE IN POLE FOR VENTING DURING GALVANIZING PROCESS.
REINFORCING PLATE @ HAND HOLE
ASTM A572 GRADE 50 MATERIAL
TYPICAL - PL THICKNESS
TO BE ≥ POLE THICKNESS
A-A
REINFORCING PLATE ARC LENGTH 8-1/2″ MIN CENTERED ON OPENING ARC LENGTH VARIES
POLE
1 5/8″
A-A
1/2″
REINFORCING PLATE ARC LENGTH 10-3/16″ MIN CENTERED ON OPENING ARC LENGTH VARIES
SECTION CC-CC
(@ HUB)
SECTION BB-BB
(@ HANDHOLE)
±1/2″ CLEAR
ALL AROUND
REINFORCING PLATE
SEE NOTE IN
ELEVATION ABOVE
3/16″
STIFFNER @ OPENING
FOR HAND HOLE OR HUB
A-A

(H) HANDHOLE/HUB REINFORCING GUSSET
N.T.S.

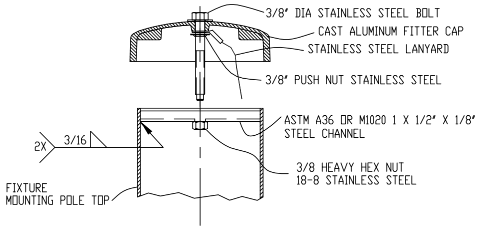
3/8″ DIA STAINLESS STEEL BOLT
CAST ALUMINUM FITTER CAP
STAINLESS STEEL LANYARD
3/8″ PUSH NUT STAINLESS STEEL
ASTM A36 OR M1020 1 X 1/2″ X 1/8″
STEEL CHANNEL
2X
3/16
3/8 HEAVY HEX NUT
18-8 STAINLESS STEEL
FIXTURE
MOUNTING POLE TOP

(F) FITTER CAP DETAIL
N.T.S. DSA-3RDSHEET_T

Information contained herein is the confidential property of Musco Sports Lighting, LLC and/or its parent companies, affiliates, successors and assigns. Reproduction, distribution, or use of the information other than its limited, intended purpose without express written permission is prohibited. Musco products referenced or shown are protected by one or more of the following patents. U.S. Patents: 4947303; 4994718; 5075828; 5134557; 5161883; 5211473; 5229681; 5377611; 5398478; 5423281; 5426577; 5600537; 5794387; 5856721; 6036338; 6203176; 6250596; 6340790; 6398392; 6681110; 6833675; 6929385; 6969034; 6988697; 7059572; D337168; D353797; D353911; D411096. Other patents pending.

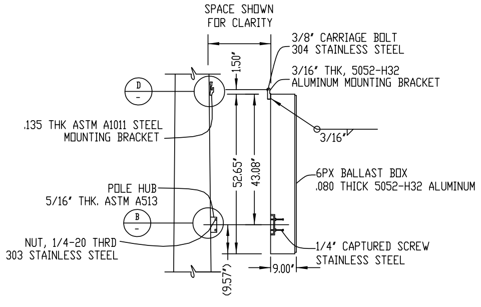
SPACE SHOWN
FOR CLARITY
3/8″ CARRIAGE BOLT
304 STAINLESS STEEL
3/16″ THK, 5052-H32
ALUMINUM MOUNTING BRACKET
1.50″
D
.135 THK ASTM A1011 STEEL
MOUNTING BRACKET
3/16″
52.65″
43.08″
6PX BALLAST BOX
.080 THICK 5052-H32 ALUMINUM
POLE HUB
5/16″ THK. ASTM A513
B
NUT, 1/4-20 THRD
303 STAINLESS STEEL
1/4″ CAPTURED SCREW
STAINLESS STEEL
(9.57″)
9.00″

6PX
(P) BALLAST BOX CONNECTION DETAIL
N.T.S. STRU-6PX_D

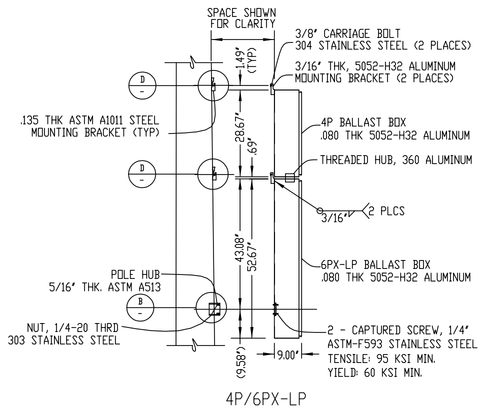
SPACE SHOWN
FOR CLARITY
3/8″ CARRIAGE BOLT
304 STAINLESS STEEL (2 PLACES)
3/16″ THK, 5052-H32 ALUMINUM
MOUNTING BRACKET (2 PLACES)
1.49″ (TYP)
D
.135 THK ASTM A1011 STEEL
MOUNTING BRACKET (TYP)
28.67″
.69″
4P BALLAST BOX
.080 THK 5052-H32 ALUMINUM
THREADED HUB, 360 ALUMINUM
3/16″
2 PLCS
43.08″
52.67″
6PX-LP BALLAST BOX
.080 THK 5052-H32 ALUMINUM
POLE HUB
5/16″ THK. ASTM A513
B
NUT, 1/4-20 THRD
303 STAINLESS STEEL
2 - CAPTURED SCREW, 1/4″
ASTM-F593 STAINLESS STEEL
TENSILE: 95 KSI MIN.
YIELD: 60 KSI MIN.
(9.58″)
9.00″

4P/6PX-LP
(RL) BALLAST BOX CONNECTION DETAIL
N.T.S. STRU-4P6PXLP_E

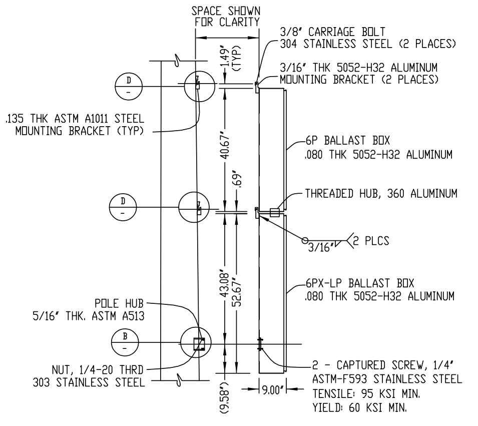
SPACE SHOWN
FOR CLARITY
3/8″ CARRIAGE BOLT
304 STAINLESS STEEL (2 PLACES)
3/16″ THK 5052-H32 ALUMINUM
MOUNTING BRACKET (2 PLACES)
1.49″ (TYP)
D
.135 THK ASTM A1011 STEEL
MOUNTING BRACKET (TYP)
40.67″
.69″
6P BALLAST BOX
.080 THK 5052-H32 ALUMINUM
THREADED HUB, 360 ALUMINUM
3/16″
2 PLCS
43.08″
52.67″
6PX-LP BALLAST BOX
.080 THK 5052-H32 ALUMINUM
POLE HUB
5/16″ THK. ASTM A513
B
NUT, 1/4-20 THRD
303 STAINLESS STEEL
2 - CAPTURED SCREW, 1/4″
ASTM-F593 STAINLESS STEEL
TENSILE: 95 KSI MIN.
YIELD: 60 KSI MIN.
(9.58″)
9.00″

6P/6PX-LP
(SL) BALLAST BOX CONNECTION DETAIL
N.T.S. STRU-6P6PXLP_E

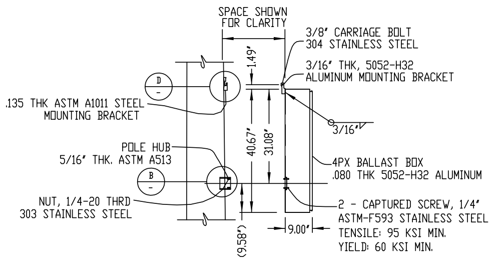
SPACE SHOWN
FOR CLARITY
3/8″ CARRIAGE BOLT
304 STAINLESS STEEL
3/16″ THK, 5052-H32
ALUMINUM MOUNTING BRACKET
1.49″
D
.135 THK ASTM A1011 STEEL
MOUNTING BRACKET
3/16″
40.67″
31.08″
4PX BALLAST BOX
.080 THK 5052-H32 ALUMINUM
POLE HUB
5/16″ THK. ASTM A513
B
NUT, 1/4-20 THRD
303 STAINLESS STEEL
2 - CAPTURED SCREW, 1/4″
ASTM-F593 STAINLESS STEEL
TENSILE: 95 KSI MIN.
YIELD: 60 KSI MIN.
(9.58″)
9.00″

4PX
(O) BALLAST BOX CONNECTION DETAIL
N.T.S. STRU-4PX_E

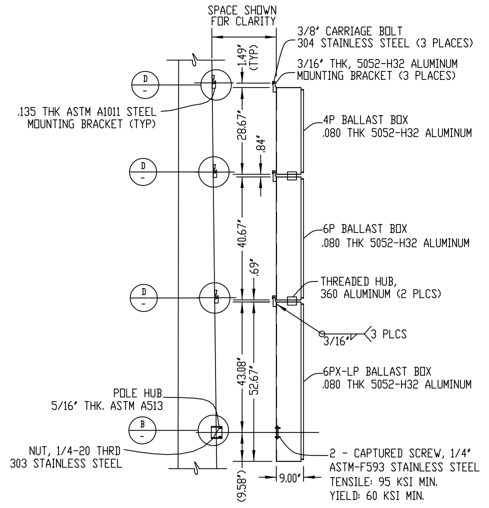
SPACE SHOWN
FOR CLARITY
3/8″ CARRIAGE BOLT
304 STAINLESS STEEL (3 PLACES)
3/16″ THK, 5052-H32 ALUMINUM
MOUNTING BRACKET (3 PLACES)
1.49″ (TYP)
D
.135 THK ASTM A1011 STEEL
MOUNTING BRACKET (TYP)
28.67″
.84″
4P BALLAST BOX
.080 THK 5052-H32 ALUMINUM
40.67″
.69″
6P BALLAST BOX
.080 THK 5052-H32 ALUMINUM
THREADED HUB,
360 ALUMINUM (2 PLCS)
3/16″
3 PLCS
43.08″
52.67″
6PX-LP BALLAST BOX
.080 THK 5052-H32 ALUMINUM
POLE HUB
5/16″ THK. ASTM A513
B
NUT, 1/4-20 THRD
303 STAINLESS STEEL
2 - CAPTURED SCREW, 1/4″
ASTM-F593 STAINLESS STEEL
TENSILE: 95 KSI MIN.
YIELD: 60 KSI MIN.
(9.58″)
9.00″

4P/6P/6PX-LP
(TL) BALLAST BOX CONNECTION DETAIL
N.T.S. STRU-4P6P6PXLP_E

IDENTIFICATION STAMP
DIV. OF THE STATE ARCHITECT
APP: 02-123587 INC:
REVIEWED FOR
SS ☑ FLS ☑ ACS ☑
DATE: 01/16/2026

Lodi High School
FIELD LIGHTING
Lodi, CA

REGISTERED PROFESSIONAL ENGINEER
JOSH RANDALL
No. 4506
Exp. 6-30-27
STRUCTURAL
STATE OF CALIFORNIA

CONSULTANT
rtm
engineering consultants
1 Ada, Suite 100, Irvine, CA 92618
Tel (949) 462-3200
WWW.RTMEC.COM
RTM JOB NO.: 463.779

musco Lighting
CORPORATE OFFICE:
P.O. Box 808
100 1st Avenue West
Oskaloosa, Iowa 52577
800/825-6020

DRAWING TITLE:
ATTACHMENT DETAILS
SCALE: SEE PLAN
REVISIONS:
REFERENCE:

PROJECT NO.
247112

DATE:
09/18/2025

DRAWN BY:
W.Isiminger

DRAWING NO.
8 OF 10
MD1

STRU-MD1

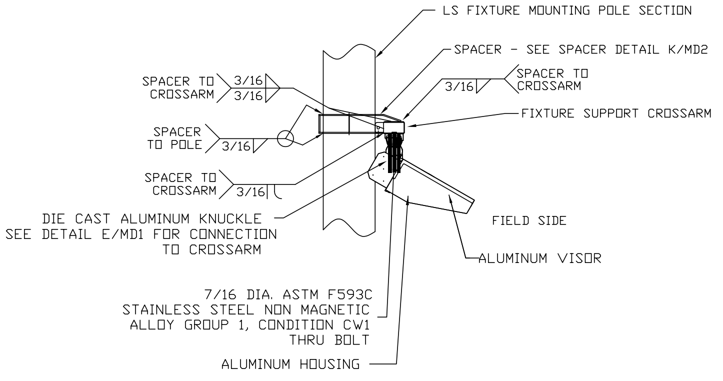
LS FIXTURE MOUNTING POLE SECTION
SPACER - SEE SPACER DETAIL K/MD2
SPACER TO CROSSARM
3/16
3/16
SPACER TO CROSSARM
3/16
FIXTURE SUPPORT CROSSARM
SPACER TO POLE
3/16
SPACER TO CROSSARM
3/16
DIE CAST ALUMINUM KNUCKLE
SEE DETAIL E/MD1 FOR CONNECTION
TO CROSSARM
FIELD SIDE
ALUMINUM VISOR
7/16 DIA. ASTM F593C
STAINLESS STEEL NON MAGNETIC
ALLOY GROUP 1, CONDITION CW1
THRU BOLT
ALUMINUM HOUSING

J LIGHT FIXTURE (TYPICAL)
N.T.S. DSA-1500-WELDON_A

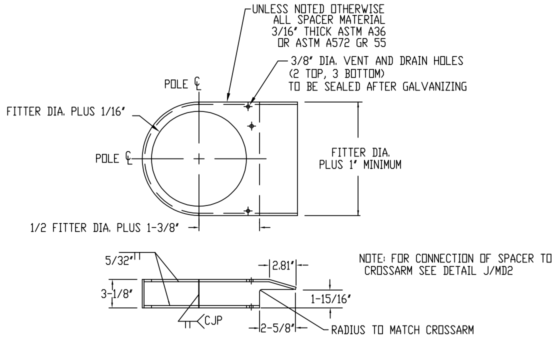
UNLESS NOTED OTHERWISE
ALL SPACER MATERIAL
3/16" THICK ASTM A36
OR ASTM A572 GR 55
3/8" DIA. VENT AND DRAIN HOLES
(2 TOP, 3 BOTTOM)
TO BE SEALED AFTER GALVANIZING
POLE ℄
FITTER DIA. PLUS 1/16"
POLE ℄
FITTER DIA.
PLUS 1" MINIMUM
1/2 FITTER DIA. PLUS 1-3/8"
5/32"
2.81"
3-1/8"
1-15/16"
CJP
2-5/8"
RADIUS TO MATCH CROSSARM

NOTE: FOR CONNECTION OF SPACER TO CROSSARM SEE DETAIL J/MD2

K SPACER DETAIL
N.T.S. DSA-SPACERWELDON_K

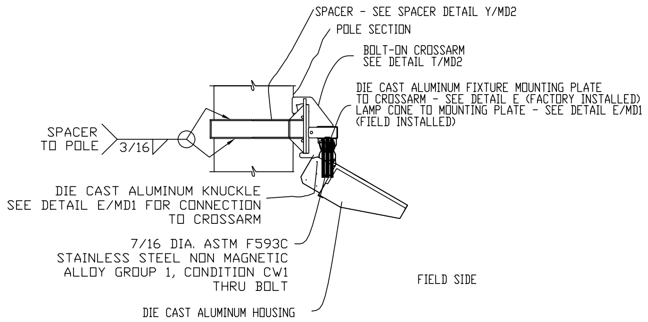
SPACER - SEE SPACER DETAIL Y/MD2
POLE SECTION
BOLT-ON CROSSARM
SEE DETAIL T/MD2
DIE CAST ALUMINUM FIXTURE MOUNTING PLATE
TO CROSSARM - SEE DETAIL E (FACTORY INSTALLED)
LAMP CONE TO MOUNTING PLATE - SEE DETAIL E/MD1
(FIELD INSTALLED)
SPACER TO POLE
3/16
DIE CAST ALUMINUM KNUCKLE
SEE DETAIL E/MD1 FOR CONNECTION
TO CROSSARM
7/16 DIA. ASTM F593C
STAINLESS STEEL NON MAGNETIC
ALLOY GROUP 1, CONDITION CW1
THRU BOLT
FIELD SIDE
DIE CAST ALUMINUM HOUSING

Z LIGHT FIXTURE (TYPICAL)
SCALE: N.T.S.
DSA-1500-BOLTON_A

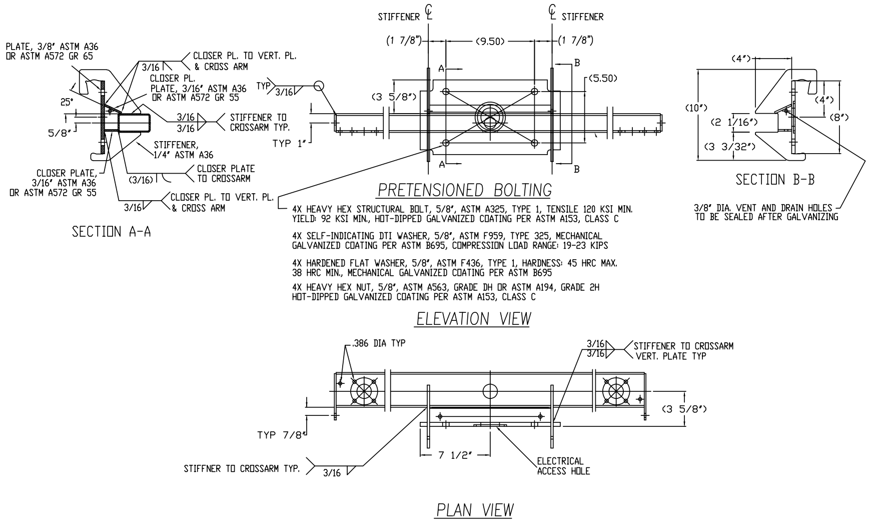
PLATE, 3/8" ASTM A36
OR ASTM A572 GR 65
3/16
CLOSER PL. TO VERT. PL.
& CROSS ARM
CLOSER PL.
PLATE, 3/16" ASTM A36
OR ASTM A572 GR 55
TYP
3/16
25°
5/8"
3/16
3/16
STIFFENER TO
CROSSARM TYP.
TYP 1"
STIFFENER,
1/4" ASTM A36
CLOSER PLATE,
3/16" ASTM A36
OR ASTM A572 GR 55
(3/16)
CLOSER PLATE
TO CROSSARM
3/16
CLOSER PL. TO VERT. PL.
& CROSS ARM
SECTION A-A
STIFFENER ℄
℄ STIFFENER
(1 7/8")
(9.50)
(1 7/8")
A
A
B
B
(5.50)
(3 5/8")
PRETENSIONED BOLTING
(4")
(10")
(4")
(8")
(2 1/16")
(3 3/32")
SECTION B-B
3/8" DIA. VENT AND DRAIN HOLES
TO BE SEALED AFTER GALVANIZING
ELEVATION VIEW
.386 DIA TYP
3/16
3/16
STIFFENER TO CROSSARM
VERT. PLATE TYP
(3 5/8")
TYP 7/8"
STIFFNER TO CROSSARM TYP.
3/16
7 1/2"
ELECTRICAL
ACCESS HOLE
PLAN VIEW

4X HEAVY HEX STRUCTURAL BOLT, 5/8", ASTM A325, TYPE 1, TENSILE 120 KSI MIN. YIELD: 92 KSI MIN., HOT-DIPPED GALVANIZED COATING PER ASTM A153, CLASS C

4X SELF-INDICATING DTI WASHER, 5/8", ASTM F959, TYPE 325, MECHANICAL GALVANIZED COATING PER ASTM B695, COMPRESSION LOAD RANGE: 19-23 KIPS

4X HARDENED FLAT WASHER, 5/8", ASTM F436, TYPE 1, HARDNESS: 45 HRC MAX. 38 HRC MIN., MECHANICAL GALVANIZED COATING PER ASTM B695

4X HEAVY HEX NUT, 5/8", ASTM A563, GRADE DH OR ASTM A194, GRADE 2H HOT-DIPPED GALVANIZED COATING PER ASTM A153, CLASS C

T BOLT ON CROSSARM DETAIL
SCALE: N.T.S. DSA-BOLTonBAR-LED_A_1

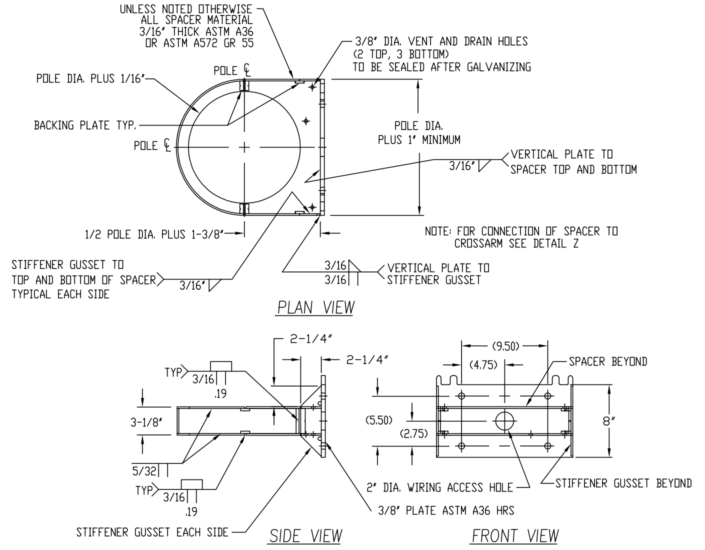
UNLESS NOTED OTHERWISE
ALL SPACER MATERIAL
3/16" THICK ASTM A36
OR ASTM A572 GR 55
3/8" DIA. VENT AND DRAIN HOLES
(2 TOP, 3 BOTTOM)
TO BE SEALED AFTER GALVANIZING
POLE DIA. PLUS 1/16"
POLE ℄
BACKING PLATE TYP.
POLE ℄
POLE DIA.
PLUS 1" MINIMUM
VERTICAL PLATE TO
SPACER TOP AND BOTTOM
3/16"
1/2 POLE DIA. PLUS 1-3/8"
STIFFENER GUSSET TO
TOP AND BOTTOM OF SPACER
TYPICAL EACH SIDE
3/16"
3/16
3/16
VERTICAL PLATE TO
STIFFENER GUSSET
PLAN VIEW
2-1/4"
2-1/4"
TYP
3/16
.19
3-1/8"
5/32
TYP
3/16
.19
STIFFENER GUSSET EACH SIDE
SIDE VIEW
(9.50)
(4.75)
SPACER BEYOND
(5.50)
(2.75)
8"
2" DIA. WIRING ACCESS HOLE
STIFFENER GUSSET BEYOND
3/8" PLATE ASTM A36 HRS
FRONT VIEW

NOTE: FOR CONNECTION OF SPACER TO CROSSARM SEE DETAIL Z

Y SPACER DETAIL
SCALE: N.T.S. DSA-BOLTON_L

Information contained herein is the confidential property of Musco Sports Lighting, LLC and/or its parent companies, affiliates, successors and assigns. Reproduction, distribution, or use of the information other than its limited, intended purpose without express written permission is prohibited. Musco products referenced or shown are protected by one or more of the following patents. U.S. Patents: 4947303; 4994718; 5075828; 5134557; 5161883; 5211473; 5229681; 5377611; 5398478; 5423281; 5426577; 5600537; 5794387; 5856721; 6036338; 6203176; 6250596; 6340790; 6398392; 6681110; 6833675; 6929385; 6969034; 6988697; 7059572; D337168; D353797; D353911; D411096. Other patents pending.

IDENTIFICATION STAMP
DIV. OF THE STATE ARCHITECT
APP: 02-123587 INC:
REVIEWED FOR
SS ☑ FLS ☑ ACS ☑
DATE: 01/16/2026

Lodi High School
FIELD LIGHTING
Lodi, CA

No. 4506
Exp. 6-30-27

CONSULTANT
rtm
engineering consultants
1 Ada, Suite 100, Irvine, CA 92618
Tel (949) 462-3200
WWW.RTMEC.COM
RTM JOB NO.: 463.779

musco Lighting
CORPORATE OFFICE:
P.O. Box 808
100 1st Avenue West
Oskaloosa, Iowa 52577
800/825-6020

DRAWING TITLE:
ATTACHMENT DETAILS
SCALE: SEE PLAN
REVISIONS:
REFERENCE:

PROJECT NO. 247112

DATE: 09/18/2025

DRAWN BY: W.Isiminger

DRAWING NO. MD2
9 OF 10

STRU-MD2

IDENTIFICATION STAMP
DIV. OF THE STATE ARCHITECT
APP: 02-123587 INC:
REVIEWED FOR
SS ☑ FLS ☑ ACS ☑
DATE: 01/16/2026

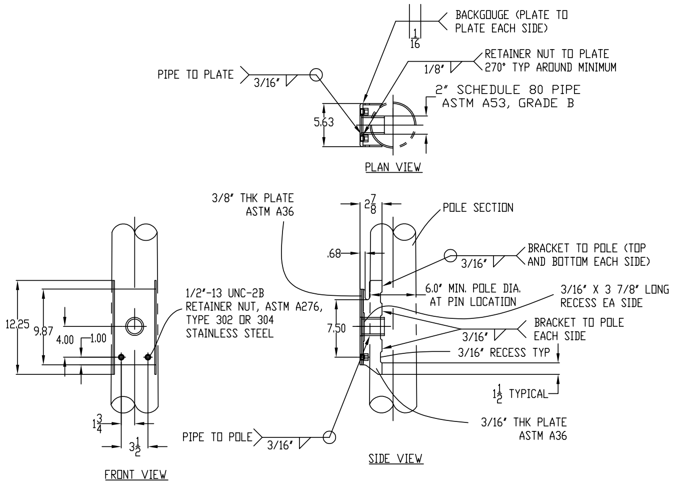
BACKGOUGE (PLATE TO PLATE EACH SIDE)
1/16
RETAINER NUT TO PLATE 270° TYP AROUND MINIMUM
1/8"
PIPE TO PLATE
3/16"
2" SCHEDULE 80 PIPE ASTM A53, GRADE B
5.63
PLAN VIEW
3/8" THK PLATE ASTM A36
2 7/8
POLE SECTION
.68
BRACKET TO POLE (TOP AND BOTTOM EACH SIDE)
3/16"
6.0" MIN. POLE DIA. AT PIN LOCATION
3/16" X 3 7/8" LONG RECESS EA SIDE
1/2"-13 UNC-2B RETAINER NUT, ASTM A276, TYPE 302 OR 304 STAINLESS STEEL
12.25
9.87
4.00
1.00
7.50
BRACKET TO POLE EACH SIDE
3/16"
3/16" RECESS TYP
1 1/2 TYPICAL
1 3/4
3 1/2
PIPE TO POLE
3/16"
3/16" THK PLATE ASTM A36
FRONT VIEW
SIDE VIEW

A BRACKET DETAIL
N.T.S. DSA-Brk-Dtl-L_A

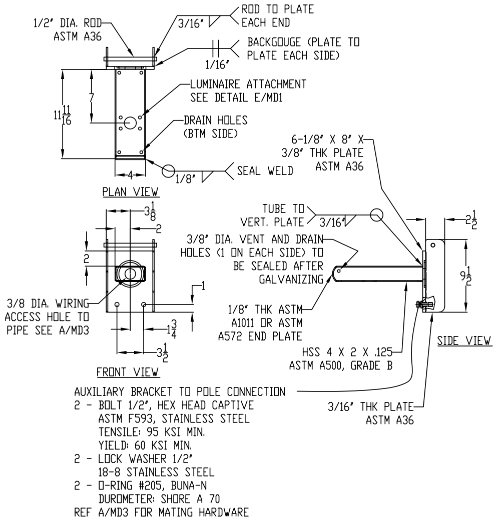
1/2" DIA. ROD ASTM A36
3/16"
ROD TO PLATE EACH END
BACKGOUGE (PLATE TO PLATE EACH SIDE)
1/16"
11 11/16
7
LUMINAIRE ATTACHMENT SEE DETAIL E/MD1
DRAIN HOLES (BTM SIDE)
4
1/8"
SEAL WELD
PLAN VIEW
6-1/8" X 8" X 3/8" THK PLATE ASTM A36
3 1/8
2
2
TUBE TO VERT. PLATE
3/16"
3/8" DIA. VENT AND DRAIN HOLES (1 ON EACH SIDE) TO BE SEALED AFTER GALVANIZING
2 1/2
9 1/2
1
1 3/8 DIA. WIRING ACCESS HOLE TO PIPE SEE A/MD3
1 3/4
1/8" THK ASTM A1011 OR ASTM A572 END PLATE
3 1/2
HSS 4 X 2 X .125 ASTM A500, GRADE B
FRONT VIEW
SIDE VIEW
3/16" THK PLATE ASTM A36

AUXILIARY BRACKET TO POLE CONNECTION
2 - BOLT 1/2", HEX HEAD CAPTIVE
ASTM F593, STAINLESS STEEL
TENSILE: 95 KSI MIN.
YIELD: 60 KSI MIN.
2 - LOCK WASHER 1/2"
18-8 STAINLESS STEEL
2 - O-RING #205, BUNA-N
DUROMETER: SHORE A 70
REF A/MD3 FOR MATING HARDWARE

B 1P AUXILIARY MOUNTING BRACKET
N.T.S. DSA-1P FIXTURE MOUNT_F

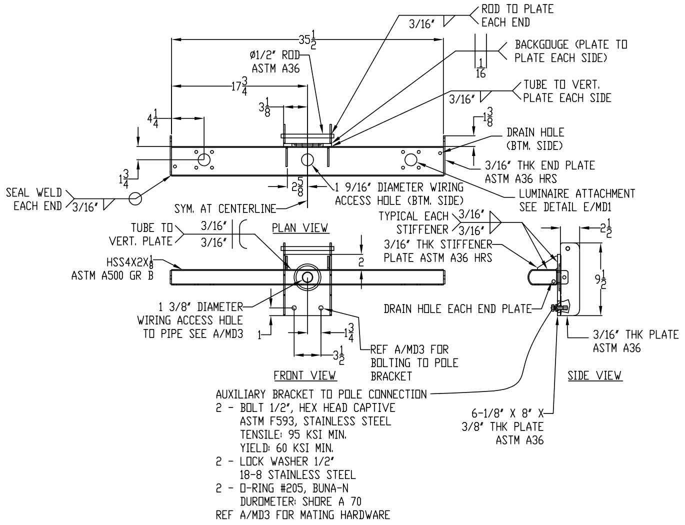
3/16"
ROD TO PLATE EACH END
35 1/2
Ø1/2" ROD ASTM A36
BACKGOUGE (PLATE TO PLATE EACH SIDE)
1/16
17 3/4
TUBE TO VERT. PLATE EACH SIDE
3/16"
3 1/8
4 1/4
1 3/8
DRAIN HOLE (BTM. SIDE)
3/16" THK END PLATE ASTM A36 HRS
1 3/4
SEAL WELD EACH END
3/16"
2 5/8
1 9/16" DIAMETER WIRING ACCESS HOLE (BTM. SIDE)
LUMINAIRE ATTACHMENT SEE DETAIL E/MD1
SYM. AT CENTERLINE
TYPICAL EACH STIFFENER
3/16"
3/16"
TUBE TO VERT. PLATE
3/16"
3/16"
PLAN VIEW
2 1/2
3/16" THK STIFFENER PLATE ASTM A36 HRS
HSS4X2X1/8 ASTM A500 GR B
2
9 1/2
1 3/8" DIAMETER WIRING ACCESS HOLE TO PIPE SEE A/MD3
DRAIN HOLE EACH END PLATE
1
1 3/4
3 1/2
REF A/MD3 FOR BOLTING TO POLE BRACKET
3/16" THK PLATE ASTM A36
FRONT VIEW
SIDE VIEW
6-1/8" X 8" X 3/8" THK PLATE ASTM A36

AUXILIARY BRACKET TO POLE CONNECTION
2 - BOLT 1/2", HEX HEAD CAPTIVE
ASTM F593, STAINLESS STEEL
TENSILE: 95 KSI MIN.
YIELD: 60 KSI MIN.
2 - LOCK WASHER 1/2"
18-8 STAINLESS STEEL
2 - O-RING #205, BUNA-N
DUROMETER: SHORE A 70
REF A/MD3 FOR MATING HARDWARE

C 2P AUXILIARY MOUNTING BRACKET
N.T.S. DSA-2P FIXTURE MOUNT_F

Information contained herein is the confidential property of Musco Sports Lighting, LLC and/or its parent companies, affiliates, successors and assigns. Reproduction, distribution, or use of the information other than its limited, intended purpose without express written permission is prohibited. Musco products referenced or shown are protected by one or more of the following patents. U.S. Patents: 4947303; 4994718; 5075828; 5134557; 5161883; 5211473; 5229681; 5377611; 5398478; 5423281; 5426577; 5600537; 5794387; 5856721; 6036338; 6203176; 6250596; 6340790; 6398392; 6681110; 6833675; 6929385; 6969034; 6988697; 7059572; D337168; D353797; D353911; D411096. Other patents pending.

Lodi High School
FIELD LIGHTING
Lodi, CA

No. 4506
Exp. 6-30-27

CONSULTANT
rtm
engineering consultants
1 Ada, Suite 100, Irvine, CA 92618
Tel (949) 462-3200
WWW.RTMEC.COM
RTM JOB NO.: 463.779

musco Lighting®
CORPORATE OFFICE:
P.O. Box 808
100 1st Avenue West
Oskaloosa, Iowa 52577
800/825-6020

DRAWING TITLE: ATTACHMENT DETAILS
SCALE: SEE PLAN
REVISIONS:
REFERENCE:

PROJECT NO. 247112
DATE: 09/18/2025
DRAWN BY: W.Isiminger
DRAWING NO. 10 OF 10 MD3

STRU-MD3

S4. CAST-IN-PLACE DEEP FOUNDATIONS (PIERS):

	Test or Special Inspection	Type	Performed By	Code References and Note
☑	**a.** Inspect drilling operations and maintain complete and accurate records for each pier.	**Continuous**	**PI**	Continuous inspection to be provided by project inspector. Refer to specific items identified in the Appendix listing exemptions for limitations.
☑	**b.** Verify pier locations, diameters, plumbness and lengths.Record concrete or grout volumes.	**Continuous**	**PI**	Continuous inspection to be provided by project inspector. Refer to specific items identified in the Appendix listing exemptions for limitations.
☑	**c.** Concrete piers.	Provide tests and inspections per CONCRETE section below.		

C1. CAST-IN-PLACE CONCRETE

	Test or Special Inspection	Type	Performed By	Code References and Notes
☑	**a.** Verify use of required design mix.	**Periodic**	**SI**	**Table 1705A.3 Item 5, 1910A.1.**
☑	**b.** Identifiy, sample, and test reinforcing steel.	**Test**	**LOR**	**1910A.2;** ACI 318-19 Ch.20 and Section 26.6.1.2; DSA IR 17-10. (See Appendix (end of this form) for exemptions.)
☑	**c.** During concrete placement, fabricate specimens for strength tests, perform slump and air content tests, and determine the temperature of the concrete.	**Test**	**LOR**	**Table 1705A.3 Item 6**; ACI 318-19 Sections 26.5 & 26.12.
☑	**d.** Test concrete (f'_c).	**Test**	**LOR**	**1905A.1.17;** ACI 318-19 Section 26.12.
☐	**e.** Batch plant inspection:	**See Notes**	**SI**	Default of **'Continuous'** per **1705A.3.3**. If approved by DSA, batch plant inspection may be reduced to **'Periodic'** subject to requirements in Section **1705A.3.3.1,** or eliminated per **1705A.3.3.2.** See IR 17-13. (See Appendix (end of this form) for exemptions.)
☐	**f.** Welding of reinforcing steel.	Provide special inspection per STEEL, Category S/A4(d) & (e) and/or S/A5(g) & (h) below.		

S/A1. STRUCTURAL STEEL, COLD-FORMED STEEL AND ALUMINUM USED FOR STRUCTURAL PURPOSES

	Test or Special Inspection	Type	Performed By	Code References and Notes
☑	**a.** Verify identification of all materials and: • Mill certificates indicate material properties that comply with requirements. • Material sizes, types and grades comply with requirements.	**Periodic**	*	**Table 1705A.2.1 Item 3a–3c.** 2202A.1; AISI S100-20 Section A3.1 & A3.2, AISI S240-20 Section A3 & A5, AISI S220-20 Sections A4 & A6. * By special inspector or qualified technician when performed off-site.
☑	**b.** Test unidentified materials	**Test**	**LOR**	**2202A.1.**
☑	**c.** Examine seam welds of HSS shapes	**Periodic**	**SI**	DSA IR 17-3.
☑	**d.** Verify and document steel fabrication per DSA-approved construction documents.	**Periodic**	**SI**	Not applicable to cold-formed steel light-frame construction, except for trusses (**1705A.2.4**).
☐	**e.** Buckling restrained braces.	**Test**	**LOR**	Testing and special inspections in accordance with IR 22-4.

S/A2. HIGH-STRENGTH BOLTS:

	Test or Special Inspection	Type	Performed By	Code References and Notes
☑	**a.** Verify identification markings and manufacturer's certificates of compliance conform to ASTM standards specified in the DSA-approved documents.	**Periodic**	**SI**	**Table 1705A.2.1 Items 1a & 1b, 2202A.1;** AISC 360-16 Section A3.3, J3.1, and N3.2; RCSC 2014 Section 1.5 & 2.1; DSA IR 17-8 & DSA IR 17-9.
☑	**b.** Test high-strength bolts, nuts and washers.	**Test**	**LOR**	**Table 1705A.2.1 Item 1c, 2213A.1**; RCSC 2014 Section 7.2; DSA IR 17-8.
☑	**c.** Bearing-type (“snug tight”) connections.	**Periodic**	**SI**	**Table 1705A.2.1 Item 2a, 1705A.2.6, 2204A.2**; AISC 360-16 J3.1, J3.2, M2.5 & N5.6; RCSC 2014 Section 9.1; DSA IR 17-9.
☐	**d.** Pretensioned and slip-critical connections.	*	**SI**	**Table 1705A.2.1 Items 2b & 2c, 1705A.2.6, 2204A.2;** AISC 360-16 J3.1, J3.2, M2.5 & N5.6; RCSC 2014 Sections 9.2 & 9.3; DSA IR 17-9. *“Continuous” or “Periodic” depends on the tightening method used.

S/A3. WELDING:

	Test or Special Inspection	Type	Performed By	Code References and Notes
☑	**a.** Verify weld filler material identification markings per AWS designation listed on the DSA-approved documents and the WPS.	**Periodic**	**SI**	**1705A.2.5, Table 1705A.2.1 Items 4 & 5**; AWS D1.1 and AWS D1.8 for structural steel; AWS D1.2 for Aluminum; AWS D1.3 for cold-formed steel; AWS D1.4 for reinforcing steel; DSA IR 17-3.
☑	**b.** Verify weld filler material manufacturer’s certificate of compliance.	**Periodic**	**SI**	DSA IR 17-3.
☑	**c.** Verify WPS, welder qualifications and equipment.	**Periodic**	**SI**	DSA IR 17-3.

S/A4. SHOP WELDING (IN ADDITION TO SECTION S/A3):

	Test or Special Inspection	Type	Performed By	Code References and Notes
☑	**a.** Inspect groove welds, multi-pass fillet welds, single pass fillet welds > 5/16", plug and slot welds.	**Continuous**	**SI**	**Table 1705A.2.1 Items 5a.1–4;** AISC 360-16 (and AISC 341-16 as applicable); DSA IR 17-3.
☑	**b.** Inspect single-pass fillet welds ≤ 5/16”, floor and roof deck welds.	**Periodic**	**SI**	**1705A.2.2, Table 1705A.2.1 Items 5a.5 & 5a.6;** AISC 360-16 (and AISC 341-16 as applicable); DSA IR 17-3.
☐	**c.** Inspect welding of stairs and railing systems.	**Periodic**	**SI**	**1705A.2.1**; AISC 360-16 (and AISC 341-16 as applicable); AWS D1.1 & D1.3; DSA IR 17-3.
☐	**d.** Verification of reinforcing steel weldability other than ASTM A706.	**Periodic**	**SI**	**1705A.3.1**; AWS D1.4; DSA IR 17-3. Verify carbon equivalent reported on mill certificates.
☐	**e.** Inspect welding of reinforcing steel.	**Continuous**	**SI**	**Table 1705A.2.1 Item 5b, 1705A.3.1, Table 1705A.3 Item 2, 1903A.8;** AWS D1.4; DSA IR 17-3.

	Test or Special Inspection	Type	Performed By	Code References and Notes
	S/A5. FIELD WELDING (IN ADDITION TO SECTION S/A3):			
	Test or Special Inspection	**Type**	**Performed By**	**Code References and Notes**
☐	**a.** Inspect groove welds, multi-pass fillet welds, single pass fillet welds > 5/16", plug and slot welds.	**Continuous**	**SI**	**Table 1705A.2.1 Items 5a.1–4;** AISC 360-16 (AISC 341-16 as applicable); DSA IR 17-3.
☑	**b.** Inspect single-pass fillet welds ≤ 5/16”.	**Periodic**	**SI**	**Table 1705A.2.1 Item 5a.5;** AISC 360-16 (AISC 341-16 as applicable); DSA IR 17-3.
☐	**c.** Inspect end-welded studs (ASTM A-108) installation (including bend test).	**Periodic**	**SI**	**2213A.2**; AISC 360-16 (AISC 341-16 as applicable); AWS D1.1; DSA IR 17-3.
☐	**d.** Inspect floor and roof deck welds.	**Periodic**	**SI**	**1705A.2.2, Table 1705A.2.1 Item 5a.6;** AISC 360-16 (AISC 341-16 as applicable); AWS D1.3; DSA IR 17-3.
☐	**e.** Inspect welding of structural cold-formed steel.	**Periodic**	**SI***	**1705A.2.5; AWS D1.3; DSA IR 17-3.** The quality control provisions of AISI S240-20 Chapter D shall also apply. * May be performed by the project inspector when specifically approved by DSA.
☐	**f.** Inspect welding of stairs and railing systems.	**Periodic**	**SI***	**1705A.2.1;** AISC 360-16 (AISC 341-16 as applicable); AWS D1.1 & D1.3; DSA IR 17-3. * May be performed by the project inspector when specifically approved by DSA.
☐	**g.** Verification of reinforcing steel weldability.	**Periodic**	**SI**	**1705A.3.1**; AWS D1.4; DSA IR 17-3. Verify carbon equivalent reported on mill certificates.
☐	**h.** Inspect welding of reinforcing steel.	**Continuous**	**SI**	**Table 1705A.2.1 Item 5b, 1705A.3.1, Table 1705A.3 Item 2, 1903A.8;** AWS D1.4; DSA IR 17-3.

	Test or Special Inspection	Type	Performed By	Code References and Notes
	S/A6. NONDESTRUCTIVE TESTING:			
	Test or Special Inspection	**Type**	**Performed By**	**Code References and Notes**
☑	**a.** Ultrasonic	**Test**	**LOR**	**1705A.2.1, 1705A.2.5;** AISC 341-16 J6.2, AISC 360-16 N5.5; AWS D1.1, AWS D1.8; DSA IR 17-2.
☑	**b.** Magnetic Particle	**Test**	**LOR**	**1705A.2.1, 1705A.2.5;** AISC 341-16 J6.2, AISC 360-16 N5.5; AWS D1.1, AWS D1.8; DSA IR 17-2.
☐	**c.**	**Test**	**LOR**	

NOTE:
THIS IS A SAMPLE DSA 103. A PROJECT SPECIFIC DSA 103 MUST BE PROVIDED FOR EACH APPLICATION TO CONSTRUCT FOR EACH SITE ON WHICH THIS PC IS USED.

DSA 103-22: LISTING OF STRUCTURAL TESTS & SPECIAL INSPECTIONS, 2022 CBC

Application Number:	School Name:	School District:
04-122814	Dugout PC Renewal	Sportsfield Specialties
DSA File Number:	**Increment Number:**	**Date Created:** 2023-11-07 13:35:57

2022 CBC

IMPORTANT: This form is only a summary list of structural tests and some of the special inspections required for the project. Generally, the structural tests and special inspections noted on this form are those that will be performed by the Geotechnical Engineer of Record, Laboratory of Record, or Special Inspector. The actual complete test and inspection program must be performed as detailed on the DSA approved documents. The appendix at the bottom of this form identifies work NOT subject to DSA requirements for special inspection or structural testing. The project inspector is responsible for providing inspection of all facets of construction, including but not limited to, special inspections not listed on this form such as structural wood framing, high-load wood diaphragms, cold-formed steel framing, anchorage of non-structural components, etc., per Title 24, Part 2, Chapter 17A (2022 CBC).

****NOTE:** Undefined section and table references found in this document are from the CBC, or California Building Code.

KEY TO COLUMNS

1. TYPE	2. PERFORMED BY
Continuous – Indicates that a continuous special inspection is required	**GE (Geotechnical Engineer)** – Indicates that the special inspection shall be performed by a registered geotechnical engineer or his or her authorized representative.
Periodic – Indicates that a periodic special inspection is required	**LOR (Laboratory of Record)** – Indicates that the test or special inspection shall be performed by a testing laboratory accepted in the DSA Laboratory Evaluation and Acceptance (LEA) Program. See CAC Section 4-335.
Test – Indicates that a test is required	**PI (Project Inspector) –** Indicates that the special inspection may be performed by a project inspector when specifically approved by DSA.
	SI (Special Inspection) – Indicates that the special inspection shall be performed by an appropriately qualified/approved special inspector.

Geotechnical Reports: Project does NOT have and does NOT require a geotechnical report

S1. GENERAL:

	Test or Special Inspection	Type	Performed By	Code References and Notes
☑	**a.** Verify that: • Site has been prepared properly prior to placement of controlled fill and/or excavations for foundations. • Foundation excavations are extended to proper depth and have reached proper material. • Materials below footings are adequate to achieve the design bearing capacity.	**See Notes**	**PI**	Refer to specific items identified in the Appendix listing exemptions for limitations. Placement of controlled fill exceeding 12" depth under foundations is not permitted without a geotechnical report.

DESCRIPTION	DESIGN VALUES
DEAD AND LIVE LOADS	
ROOF LIVE LOAD	20 PSF
ROOF DEAD LOAD	9 PSF
ALLOWABLE SOIL PRESSURE	
DL+LL (CONCRETE FOOTING)	1500 PSF
DL+LL+SEISMIC (CONCRETE FOOTING)	100 PCF LATERAL
ROOF SNOW LOAD	
GROUND SNOW LOAD P_g	50* PSF
FLOOD DESIGN	
FLOOD HAZARD AREA: (IF NO, SKIP TO WIND DESIGN)	NO
WIND DESIGN	
BASIC WIND SPEED (3-SECOND GUST), V	100 MPH
RISK CATEGORY	II
WIND EXPOSURE CATEGORY:	C
TOPOGRAPHIC FACTOR, K_{ZT} (1 MIN.).	1
INTERNAL PRESSURE COEFFICIENT, GC_{PI} (IF APPLICABLE).	N/A
SEISMIC DESIGN	
LATERAL FORCE-RESISTING SYSTEM	POLE: SCCS
ANALYSIS PROCEDURE	STATIC (ELF)
SEISMIC DESIGN CATEGORY (SDC).	E
SEISMIC IMPORTANCE FACTOR, I_E	1.0
DESIGN BASE SHEAR, V	CANTILEVER DUGOUT: 1504# /POST GAMESHADE DUGOUT: 1599# /POST
SEISMIC RESPONSE COEFFICIENT, C_S	0.99
RESPONSE MODIFICATION FACTOR, R	1.5
SITE CLASS	D (DEFAULT)
MAPPED SPECTRAL RESPONSE ACCELERATION AT SHORT PERIOD, S_S	3.11
SHORT-PERIOD SITE COEFFICIENT, F_A	1.2
DESIGN SPECTRAL RESPONSE ACCELERATION AT SHORT PERIOD, S_{DS} – USED TO DETERMINE C_S	2.487
MAPPED SPECTRAL RESPONSE ACCELERATION AT 1-SECOND PERIOD, S_1	1.23
LONG-PERIOD SITE COEFFICIENT, F_V	1.7
DESIGN SPECTRAL RESPONSE ACCELERATION AT 1-SECOND PERIOD, S_{D1}	1.39
HORIZONTAL OR VERTICAL IRREGULARITY TYPE(S)	NONE

* STRUCTURE SHALL BE THE GREATER OF 20 FT OR 6h AWAY FROM ADJACENT BUILDINGS TO PREVENT SNOW DRIFT EFFECT, WHERE 'h' IS THE VERTICAL SEPARATION BETWEEN THE TWO ADJACENT STRUCTURE.

SCOPE OF WORK

THE SCOPE OF WORK FOR THIS PC INCLUDES THE CONSTRUCTION OF FOUNDATIONS, THE SHADE STRUCTURES AND FOR THE CONCRETE SLAB ON GRADE. THE SHADE STRUCTURES ARE DESIGNED FOR THE PLAN DIMENSIONS SHOWN IN THESE DRAWINGS WITH THE LENGTH OF THE SHADE STRUCTURE DETERMINED FOR EACH SITE. THE FOUNDATIONS HAVE BEEN DESIGNED BASED ON CODE MINIMUM VALUES. THE DESIGN LOADS ARE LIMITED TO WHAT IS SHOWN IN THE GENERAL NOTES.

GENERAL

1. THE CONTRACTOR SHALL VERIFY ALL DIMENSIONS PRIOR TO STARTING CONSTRUCTION. THE STRUCTURAL ENGINEER OF RECORD (S.E.O.R.) SHALL BE NOTIFIED OF ANY DISCREPANCIES OR INCONSISTENCIES.

2. ALL DRAWINGS ARE CONSIDERED TO BE A PART OF THE CONTRACT DOCUMENTS. THE CONTRACTOR SHALL BE RESPONSIBLE FOR THE REVIEW AND COORDINATION OF ALL DRAWINGS AND SPECIFICATIONS PRIOR TO THE START OF CONSTRUCTION. ANY DISCREPANCIES THAT OCCUR SHALL BE BROUGHT TO THE ATTENTION OF THE S.E.O.R. PRIOR TO START OF CONSTRUCTION SO THAT A CLARIFICATION CAN BE ISSUED. ANY WORK PERFORMED IN CONFLICT WITH THE CONTRACT DOCUMENTS OR ANY CODE REQUIREMENTS SHALL BE CORRECTED BY THE CONTRACTOR AT THEIR OWN EXPENSE AND AT NO EXPENSE TO THE OWNER OR S.E.O.R.

3. NOTES AND DETAILS ON DRAWINGS SHALL TAKE PRECEDENCE OVER GENERAL NOTES AND TYPICAL DETAILS. WHERE NO DETAILS ARE GIVEN, CONSTRUCTION SHALL BE AS SHOWN FOR SIMILAR WORK.

4. ALL WORK SHALL CONFORM TO THE MINIMUM STANDARDS OF THE FOLLOWING CODES:
   2022 CALIFORNIA BUILDING CODE AND LATEST REVISIONS REFERRED TO HERE AS "THE CODE", AND ANY OTHER REGULATING AGENCIES WHICH HAVE AUTHORITY OVER ANY PORTION OF THE WORK, INCLUDING THE STATE OF CALIFORNIA DIVISION OF INDUSTRIAL SAFETY, AND THOSE CODES & STANDARDS LISTED IN THESE NOTES AND SPECIFICATIONS.

5. THE CONTRACT STRUCTURAL DRAWINGS AND SPECIFICATIONS REPRESENT THE FINISHED STRUCTURE. THEY DO NOT INDICATE THE METHOD OF CONSTRUCTION. THE CONTRACTOR SHALL PROVIDE ALL MEASURES NECESSARY TO PROTECT THE STRUCTURE DURING CONSTRUCTION. SUCH MEASURES SHALL INCLUDE, BUT NOT BE LIMITED TO, BRACING, SHORING FOR LOADS DUE TO CONSTRUCTION EQUIPMENT, ETC.

6. ASTM SPECIFICATIONS ON THE DRAWINGS SHALL BE OF THE LATEST REVISION.

7. CONTRACTOR SHALL INVESTIGATE SITE DURING CLEARING AND EARTHWORK OPERATIONS FOR FILLED EXCAVATIONS OR BURIED STRUCTURES, SUCH AS CESSPOOLS, CISTERNS, FOUNDATIONS, ETC. IF ANY SUCH STRUCTURES ARE FOUND, STRUCTURAL ENGINEER SHALL BE NOTIFIED IMMEDIATELY.

8. CONSTRUCTION MATERIAL SHALL BE SPREAD OUT IF PLACED ON FRAMED ROOF OR FLOOR. LOAD SHALL NOT EXCEED THE DESIGN LIVE LOAD PER SQUARE FOOT. PROVIDE ADEQUATE SHORING AND/OR BRACING WHERE STRUCTURE HAS NOT ATTAINED DESIGN STRENGTH.

9. CHANGES TO THE APPROVED DRAWINGS AND SPECIFICATIONS SHALL BE MADE BY AN ADDENDUM OR A CONSTRUCTION CHANGE DOCUMENT (CCD) APPROVED BY THE DIVISION OF THE STATE ARCHITECT, AS REQUIRED BY SECTION 4-338, PART 1, TITLE 24, CCR.

10. A 'DSA CERTIFIED' PROJECT INSPECTOR, CLASS 2, EMPLOYED BY THE DISTRICT (OWNER) AND APPROVED BY DSA SHALL PROVIDE CONTINUOUS INSPECTION OF THE WORK. THE DUTIES OF THE INSPECTOR ARE DEFINED IN SECTION 4-342, PART 1, TITLE 24, CCR. A MINIMUM CLASS 3 INSPECTOR IS REQUIRED.

11. A DSA ACCEPTED TESTING LABORATORY DIRECTLY EMPLOYED BY THE DISTRICT (OWNER) SHALL CONDUCT ALL THE REQUIRED TESTS AND INSPECTIONS FOR THE PROJECT.

DESIGN LOADS:

ROOF LIVE LOAD - PER CHAPTER 16A OF THE CODE:
ROOF LIVE LOAD, Lr = 20 PSF

WIND LOAD - PER CHAPTER 16A OF THE CODE UTILIZING THE FOLLOWING PROCEDURE: - MWFRS DIRECTIONAL PROCEDURE - ASCE 7-16 - CHAPTER 27

RISK CATEGORY = II
IMPORTANCE FACTOR, Iw = 1.0
BASIC DESIGN WIND SPEED, V (3 SECOND GUST) = 100 MPH ULT
WIND EXPOSURE = C
TOPOGRAPHIC FACTOR, Kzt = 1.0
WIND DIRECTIONALITY FACTOR, Kd = 0.85
GUST EFFECT FACTOR, G = 0.85

SEISMIC LOADS - PER CHAPTER 16A OF THE CODE UTILIZING THE FOLLOWING PROCEDURE:
- THE EQUIVALENT LATERAL FORCE ANALYSIS
RISK CATEGORY = II
IMPORTANCE FACTOR = 1.0
Ss = 3.11
S1 = 1.23
SITE CLASS = D (DEFAULT)
SDS = 2.487
SD1 = 1.39

UNLESS A SITE-SPECIFIC GROUND MOTION HAZARD ANALYSIS IS PERFOMED, THE Sm1 VALUE INCREASED BY 50% SHALL BE LESS THAN THE DESIGN CRITERIA STATED HEREIN.

SEISMIC FORCE RESISTING SYSTEM:
- METAL DECK SPANNING TO CANTILEVERED COLUMN SYSTEM DETAILED TO CONFORM TO THE REQUIREMENTS FOR: SPECIAL STEEL CANTILEVER COLUMN SYSTEMS.

R = 2.5

Ωo = 1.25

Cd = 2.5

FLOOD ZONE:

- IF PROJECT SPECIFIC SITE IS OTHER THAN FLOOD ZONE 'X', A SIGNED AND SEALED LETTER FROM A GEOTECH ENGINEER SHALL VALIDATE THE ALLOWABLE SOILS VALUES OR PROVIDE ALTERNATE(S).

CODE ANALYSIS

OCCUPANCY: A-3
RISK CATEGORY II
CONSTRUCTION TYPE: V B
REQUIRED SEPARATION: 30 FT.
FIRE SPRINKLERS: NOT REQUIRED
ROOF COVERING: METAL DECK - CLASS A
OCCUPANT LOAD: 19 OCCUPANTS
EGRESS WIDTH: 36 IN. (UNLIMITED OPENING)
ALLOWABLE HEIGHT: 40 FT.
ALLOWABLE AREA: 6000 SQ. FT., 1 STORY
ACTUAL HEIGHT: 10'-3"
ACTUAL AREA: 384 SQ. FT. MAX

1. USE AND OCCUPANCY MUST BE SPECIFIED ON THE SITE APPLICATION DRAWINGS SO THAT THE DSA REVIEWER CAN VERIFY THE RISK CATEGORY OF THE PC STRUCTURE AS IT APPLIES TO THE SITE IN ACCORDANCE WITH CBC SECTION 1604A.5.

2. SECTION OF USE AND OCCUPANCY CLASSIFICATION PER CBC CHAPTER 3, OCCUPANT LOAD FACTOR (OLF) PER CBC TABLE 1004.1.2. AND DETERMINATION OF RISK CATEGORY PER CBC TABLE 1604A.5, TO BE COMPLETED BY DESIGN PROFESSIONAL AT TIME OF OTC OR PROJECT SUBMITTAL.

3. REGARDLESS OF SIZE, IF STRUCTURE THAT WOULD OTHERWISE QUALIFY AS RISK CATEGORY II PROVIDES SHELTER FOR EMERGENCY VEHICLES OR EQUIPMENT; OR PROVIDES REQUIRED ACCESS TO, REQUIRED EGRESS FROM OR SHARES LIFE SAFETY COMPONENTS WITH A RC III OR IV BUILDING, THE MORE RESTRICTIVE RISK CATEGORY MUST BE APPLIED. SEE CBC 1604A.5.1.

4. GEOHAZARD REPORTS ARE NOT REQUIRED FOR CANTILEVERED COLUMN OPEN STRUCTURES PROVIDED THEY ARE CONSTRUCTED OF METAL, DO NOT EXCEED 4000 SF IN PLAN AREA AND ARE NOT LOCATED WITHIN STATE OR LOCAL GEOHAZARD ZONES. THE STRUCTURES MAY BE SPLIT INTO MULTIPLE SEISMICALLY SEPARATED STRUCTURES TO STAY BELOW THE 4000 SF TRIGGER.

SHEET INDEX	
SHEET NUMBER	SHEET NAME
SFPC-1	GENERAL NOTES AND DSA FORM 103
SFPC-2	GENERAL NOTES, ABBREVIATIONS AND SYMBOLS
SFPC-3	FOUNDATION, SLAB PLANS AND DETAILS
SFPC-4	ROOF PLANS AND DETAILS
SFPC-5	SECTIONS AND DETAILS

TOTAL SHEETS FOR THIS PC: 5

Project Specific Approval

IDENTIFICATION STAMP
DIV. OF THE STATE ARCHITECT
APP: 02-123587 INC:
REVIEWED FOR
SS ☑ FLS ☑ ACS ☑
DATE: 01/16/2026

PRE-CHECKED
DUGOUT STRUCTURES

Owner

SPORTSFIELD SPECIALTIES
WWW.SPORTSFIELDSPECIALTIES.COM

41155 State Highway 10,
PO Box 231 Delhi, NY 13753

Issue/Revision

Issue No.	Rev. No.	Description	Date
		DSA SUBMITTAL	09/19/2023

~~APPROVED~~
~~DIV. OF THE STATE ARCHITECT~~
~~APP: 04-122814 PC~~
~~REVIEWED FOR~~
~~SS ☑ FLS ☑ ACS ☑ CG ☐~~
~~DATE: 02/19/2024~~

kpff

18400 Von Karman Ave., Suite 600
Irvine, CA 92612
O: 949.252.1022
F: 949.252.8082
www.kpff.com

PRE-CHECK (PC) DOCUMENT

CODE: 2022 CBC

A SEPARATE PROJECT APPLICATION FOR CONSTRUCTION IS REQUIRED.

Seal/Signature

Exp. 3-31-24

Sheet Title:

GENERAL NOTES AND DSA FORM 103

Designed By: CA/JS	Project Number: 2200334
Drawn By: FC	Scale: AS NOTED
Checked By: BT	Sheet Number: SFPC-1
Date: 2023-07-20	

Date: Feb 05, 2024, 3:04pm - Drawing: S:\Projects\2022\2200334 - DSA 2022 PC for Dugout Structures\DRAWINGS\AutoCAD\SFPC-1.dwg - Layout: SFPC-1 - Printed By: FCarreon - Profile: KPFF-ARIAL - Job Name: DSA PC Shade Economy- PM: JV - PD: ELG
Xrefs: 2200334TB.dwg

ABBREVIATIONS

A	AREA (IN^2)
AB	ANCHOR BOLT
ABV	ABOVE
ADD'L	ADDITIONAL
ADJ	ADJACENT
AFF	ABOVE FINISH FLOOR
AGGR	AGGREGATE
ALT	ALTERNATE
ALUM	ALUMINUM
ANCH	ANCHOR
APPVD	APPROVED
APROX	APPROXIMATELY
ARCH	ARCHITECTURAL; ARCHITECT
AR	ANCHOR ROD
ARND	AROUND
&	AND
@	AT
BEL	BELOW
BD	BOARD
BLDG	BUILDING
BLK	BLOCK
BLKG	BLOCKING
BM	BEAM
BN	BOUNDARY NAIL
BNDRY	BOUNDARY
BOT OR B	BOTTOM
BOF	BOTTOM OF FOOTING
BRCG	BRACING
BRG	BEARING
BSMT	BASEMENT
BT	BENT
BTW	BETWEEN
BYND	BEYOND
CAM OR C	CAMBER
CALCS	CALCULATIONS
CANT	CANTILEVER
CBC	CALIFORNIA BUILDING CODE
CC	CENTER TO CENTER
CCR	CALIFORNIA CODE OF REGULATIONS
CG	CENTER OF GRAVITY
CIP	CAST IN PLACE
CJ	CONSTRUCTION JOINT; CONTROL JOINT
CJP	COMPLETE JOINT PENETRATION
CL	CENTER LINE
CLG	CEILING
CLR	CLEARANCE; CLEAR
CMU	CONCRETE MASONRY UNIT
CO	COMPANY
COL	COLUMN
COMP	COMPRESSION
CONC	CONCRETE
CONN	CONNECTION; CONNECT
CONST	CONSTRUCTION
CONT	CONTINUE; CONTINUOUS
CONTR	CONTRACTOR
CP	COMPLETE PENETRATION
CTR	CENTER
CTSK	COUNTERSINK; COUNTERSUNK
CF	CUBIC FOOT
d	PENNY (NAIL OR d_b)
DBL	DOUBLE
DBLR	DOUBLER
DCW	DEMAND CRITICAL WELD
DEMO	DEMOLITION
DEPT	DEPARTMENT
DET	DETAIL
DF/L	DOUGLAS FIR/LARCH
DIA OR Ø	DIAMETER
DIAG	DIAGONAL
DIAPH	DIAPHRAGM
DIM	DIMENSION
DIR	DIRECTION
DIST	DISTANCE
DL	DEAD LOAD
DN	DOWN
DO	DITTO
DWG	DRAWING
DWL	DOWEL
(E)	EXISTING
EA	EACH
EF	EACH FACE
e.g.	FOR EXAMPLE
EJ	EXPANSION JOINT
EL	ELEVATION
ELEC	ELECTRICAL
ELEV	ELEVATOR
EMB	EMBEDDED
EN	EDGE NAIL
ENGR	ENGINEER
EOS	EDGE OF SLAB
EQ	EQUAL
EQUIP	EQUIPMENT
EQUIV	EQUIVALENT
ES	EACH SIDE
ETC	ET CETERA
EW	EACH WAY
EXIST	EXISTING
EXT	EXTERIOR
Fb	ALLOWABLE BENDING STRESS
FB	FLAT BAR
F'c	CONCRETE COMPRESSION STRENGTH
FD	FLOOR DRAIN
FDN	FOUNDATION
FF	FINISH FLOOR
FHWS	FLAT HEAD WOOD SCREW
FIN	FINISH
FLR	FLOOR
FLG	FLANGE
FN	FIELD NAIL
F'm	MASONRY COMPRESSIVE STRENGTH
FOS	FACE OF STUD
FOW	FACE OF WALL
FP	FIREPROOF; FULL PENETRATION
FRMG	FRAMING
FS	FULL SIZE; FAR SIDE
FT	FOOT; FEET
FTG	FOOTING
Fy	YIELD STRENGTH
GA	GAUGE
GB	GRADE BEAM
GC	GENERAL CONTRACTOR
GALV	GALVANIZED
GAR	GARAGE
GEN	GENERAL
GLB	GLUED LAMINATED BEAM
GND	GROUND
GR	GRADE
HD	HOLDOWN
HDR	HEADER
HGR	HANGER
HK	HOOK
HORIZ OR H	HORIZONTAL
HOSP	HOSPITAL
HP	HEAVY PILING
HR	HARD ROCK
HS	HIGH STRENGTH
HT	HEIGHT
I	MOMENT OF INERTIA
ID	INSIDE DIAMETER
i.e.	THAT IS
IF	INSIDE FACE
IN	INCH
INCL	INCLUDE, INCLUDING
INFO	INFORMATION
INSP	INSPECTION, INSPECTOR
INT	INTERIOR
INTERM	INTERMEDIATE
INV	INVERT
JST	JOIST
JT	JOINT
KIP OR K	1,000 POUNDS
KO	KNOCK-OUT
KP	KING POST
KSF	KIPS PER SQUARE FOOT
KSI	KIPS PER SQUARE INCH
LAB	LABORATORY
LBS OR #	POUND
LDGR	LEDGER
LF	LINEAL FOOT
LG	LONG
LH	LOW HYDROGEN
LIN	LINEAL; LINEAR
LL	LIVE LOAD
LLBB	LONG LEGS BACK-TO-BACK
LLH	LONG LEG HORIZONTAL
LLV	LONG LEG VERTICAL
LOCS	LOCATIONS
LONGIT	LONGITUDINAL
LO-HY	LOW HYDROGEN
LP	LOW POINT
LSH	LONG SLOTTED HOLES
LTWT	LIGHTWEIGHT
LVL	LEVEL
MAS	MASONRY
MAT	MATERIAL
MAX	MAXIMUM
MB	MACHINE BOLT
MDF	MEDIUM DENSITY FIBERBOARD
MECH	MECHANICAL
MEZZ	MEZZANINE
MFR	MANUFACTURER
MID	MIDDLE
MIN	MINIMUM
MISC	MISCELLANEOUS
MK	MARK
MTL	METAL
MULT	MULTIPLE
(N)	NEW
N	NORTH
NAT	NATURAL
NF	NEAR FACE
NIC	NOT IN CONTRACT
NLG	NAILING
NO. OR #	NUMBER
NS	NEAR SIDE
NTS	NOT TO SCALE
OC	ON CENTER
OD	OUTSIDE DIAMETER
OF	OUTSIDE FACE
OH	OPPOSITE HAND
OPNG	OPENING
OPP	OPPOSITE
OPNG	OPENING
OSB	ORIENTED STRAND BOARD
PARA OR //	PARALLEL
PC	PRECAST
PC	PIPE COLUMN
PCF	POUNDS PER CUBIC FOOT
PCI	POUNDS PER CUBIC INCH
PDF	POWER DRIVEN FASTENERS
PLF	POUNDS PER LINEAL FOOT
PE	POLYETHYLENE, PROFESSIONAL ENGINEER
PERP OR ⊥	PERPENDICULAR
PHWS	PER HEAD WOOD SCREW
PI	PLYWOOD INDEX
PJ	PANEL JOINT
PJP	PARTIAL JOINT PENETRATION
PL OR PL	PLATE
PL	PROPERTY LINE
PLY	PLYWOOD
PLCS	PLACES
PLBG	PLUMBING
PNL	PANEL
PP	PARTIAL PENETRATION
PREFAB	PREFABRICATED
PRKG	PARKING
PROJ	PROJECT
PROP	PROPERTY
PSF	POUNDS PER SQUARE FOOT
PSI	POUNDS PER SQUARE INCH
PUN	PUNCHED
PTDF	PRESSURE TREATED DOUGLAS FIR
PTFE	POLYTETRAFLUORETHYLENE (TEFLON)
PVC	POLYVINYL CHLORIDE
PVMT	PAVEMENT
PWJ	PLYWOOD WEB JOIST
RAD	RADIUS
RAFT	RAFTER
RD	ROOF DRAIN
REF	REFERENCE
REG	REGULAR
REINF	REINFORCE; REINFORCING
REQ	REQUIRED
RET	RETAINING
REV	REVISION
RF	ROOF
RM	ROOM
RO	ROUGH OPENING
S	ELASTIC SECTION MODULUS
SCHED	SCHEDULE
SECT	SECTION
SEL	SELECT
SEP	SEPARATION
SFRS	SEISMIC FORCE RESISTING SYSTEM
SHT	SHEET
SHTG	SHEATHING
SIM	SIMILAR
SIMP	SIMPSON
SJ	SEISMIC JOINT
SLBB	SHORT LEGS BACK-TO-BACK
SMS	SHEET METAL SCREWS
SPA	SPACES
SPCG	SPACING
SPCL	SPECIAL
SPCS	SPACES
SPECS	SPECIFICATIONS
SQ	SQUARE
SS	SELECT STRUCTURAL
SSH	SHORT SLOTTED HOLES
STAGG	STAGGER
STD	STANDARD
STIFF	STIFFENER
STIRR	STIRRUP
STL	STEEL
STRUC	STRUCTURAL
SW	SHEAR WALL
SYM	SYMMETRICAL
T	TOP
T&B	TOP & BOTTOM
T&G	TONGUE & GROOVE
T/	TOP OF
TB	TIE BEAM
TEMP	TEMPERATURE, TEMPORARY
THK	THICK
THRU	THROUGH
TL	TOTAL LOAD
TN	TOE NAIL
TOB	TOP OF BEAM
TOC	TOP OF CURB
TOL	TOP OF LEDGER
TOS	TOP OF STEEL
TOSH	TOP OF SHEAR WALL
TOSL	TOP OF SLAB
TOW	TOP OF WALL
TRANSV	TRANSVERSE
TSG	TAPERED STEEL GIRDER
TYP	TYPICAL
UL	UNDERWRITERS' LABORATORY, INC.
UBC	UNIFORM BUILDING CODE
UNO	UNLESS NOTED OTHERWISE
UT	ULTRASONIC TEST
VERT or V	VERTICAL
VIF	VERIFY IN FIELD
WF	WIDE FLANGE
W/	WITH
W/C	WATER/CEMENT
W/O	WITHOUT
WD	WOOD
WP	WORK POINT, WATERPROOF
WWF	WELDED WIRE FABRIC
WHT	WEIGHT

STRUCTURAL STEEL SHAPES

W	W SHAPES
S	S SHAPES
M	M SHAPES
HP	HP SHAPES
C	STD CHANNEL
MC	MISC CHANNEL
L	ANGLES
WT, ST, MT	STRUCT TEES CUT FROM W, S, M SHAPES
P#	STANDARD PIPE
PX#	EXTRA STRONG PIPE
PXX#	DBL EXTRA STRONG PIPE
HSS	HOLLOW STRUCTURAL SECTION
TS	TUBE SECTION

INSTITUTIONS

ACI	AMERICAN CONCRETE INSTITUTE
AISC	AMERICAN INSTITUTE OF STEEL CONSTRUCTION
AISI	AMERICAN IRON AND STEEL INSTITUTE
AITC	AMERICAN INSTITUTE OF TIMBER CONSTRUCTION
ANSI	AMERICAN NATIONAL STANDARDS INSTITUTE
APA	AMERICAN PLYWOOD ASSOCIATION
ASTM	AMERICAN SOCIETY FOR TESTING AND MATERIALS
AWPB	AMERICAN WOOD PRESERVERS BUREAU
AWS	AMERICAN WELDING SOCIETY
CRSI	CONCRETE REINFORCING STEEL INSTITUTE
DSA	DIVISION OF THE STATE ARCHITECT
ICBO	INTERNATIONAL CONFERENCE OF BUILDING OFFICIALS
ICC	INTERNATIONAL CODE COUNCIL
ICC-ER	ICC-ES LEGACY REPORT
ICC-ES	ICC EVALUATION SERVICE
ICC-ESR	ICC-ES REPORT
OSHPD	OFFICE OF STATEWIDE HEALTH PLANNING AND DEVELOPMENT
PCI	PRE-CAST CONCRETE INSTITUTE
PTI	POST-TENSION CONCRETE INSTITUTE
SJI	STEEL JOIST INSTITUTE
TPI	TRUSS PLATE INSTITUTE

SYMBOLS

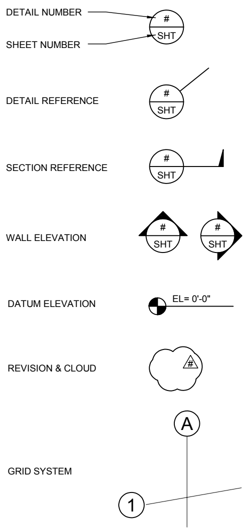

PARTIAL LIST OF APPLICABLE CODES AS OF January 1, 2023*

2022 California Administrative Code (CAC), Part 1, Title 24 CCR*
2022 California Building Code (CBC), Part 2, Title 24 CCR
2022 California Green Building Standards Code (CALGreen), Part 11, Title 24 CCR
2022 California Referenced Standards Code, Part 12, Title 24 CCR
Title 19 CCR, Public Safety, State Fire Marshal Regulations

STRUCTURAL STEEL

1. STRUCTURAL STEEL SHALL BE DETAILED, FABRICATED AND ERECTED BY AN APPROVED AND LICENSED FABRICATOR IN ACCORDANCE WITH THE AISC SPECIFICATION FOR THE DESIGN, FABRICATION AND ERECTION OF STRUCTURAL STEEL FOR BUILDINGS (2022 EDITION), AND WITH CHAPTERS 17A AND 22A OF THE CODE.

2. ALL STRUCTURAL STEEL SHALL CONFORM TO THE ASTM DESIGNATION AS INDICATED BELOW (UNO):

   PLATES, CONNECTION PLATES, AND MISC: A36 (UNO)

   HSS SECTIONS: A500, GRADE B

   BOLTS: A325

   NUTS: A563

   WASHERS: F436

   BOLTS IN CONCRETE U.N.O.: F1554 36 KSI (UNO)

3. BOLT HOLES USED IN STEEL SHALL BE 1/16" LARGER IN DIAMETER THAN NOMINAL SIZE OF BOLT USED, EXCEPT AS NOTED.

4. ALL WELDING IS TO BE DONE BY CERTIFIED WELDERS USING E70XX ELECTRODES (UNO). ALL WELDS SHALL BE IN CONFORMITY WITH THE PROJECT SPECIFICATIONS AND THE CODE FOR WELDING IN BUILDING CONSTRUCTION (AWS D1.1) OF THE AMERICAN WELDING SOCIETY. SPECIAL INSPECTION OF WELDING PER SECTION 1705A.2 OF THE CODE. USE OF E70T-4 WIRE IS NOT PERMITTED.

5. WHERE FABRICATION OF STRUCTURAL LOAD-BEARING MEMBERS AND ASSEMBLIES IS BEING PERFORMED ON THE PREMISES OF FABRICATOR'S SHOP, SPECIAL INSPECTION OF THE FABRICATED ITEMS SHALL BE REQUIRED.

6. WELD LENGTHS CALLED FOR ON PLANS ARE THE NET EFFECTIVE LENGTH REQUIRED. WHERE FILLET WELD SYMBOL IS GIVEN WITHOUT INDICATION OF SIZE, USE MINIMUM SIZE WELDS AS SPECIFIED IN AISC 360-16 SECTION J2.2b.

7. THE SPECIAL INSPECTIONS FOR STEEL ELEMENTS OF BUILDINGS AND STRUCTURES SHALL BE AS REQUIRED BY SECTION 1705A.2.1 OF THE CODE AND CONSTRUCTION DOCUMENTS.

8. BEAM COPES AND WELD ACCESS HOLES SHALL COMPLY WITH AISC 360-16 SECTION J1.6.

9. ALL WELD MATERIAL SHALL COMPLY WITH AISC 360-16 SECTION J2.6.

10. WELDING OF DEMAND CRITICAL WELDS (DCW) SHALL BE PER AWS 1.8.

11. THE THERMAL CUTTING OF ALL MEMBERS SHALL COMPLY WITH AISC 360.16 SECTION M2.2.

12. ALL EXPOSED STRUCTURAL STEEL SHALL BE POWDERED COATED WITH A DUPONT TGIC POLYESTER PRIMER FOLLOWED BY THE OWNER'S DUPONT TGIC POLYESTER COLOR OF CHOICE.

13. ALL EXPOSED STEEL FASTENERS, INCLUDING CAST-IN-PLACE ANCHOR BOLTS/RODS, SHALL BE STAINLESS STEEL (TYPE 304 MINIMUM), HOT-DIP GALVANIZED (ASTM A153, CLASS D MINIMUM OR ASTM F2329), OR PROTECTED WITH CORROSION-PREVENTIVE COATING THAT DEMONSTRATED NO MORE THAN 2% OF RED RUST MINIMUM 1,000 HOURS OF EXPOSURE IN SALT SPRAY TEST PER ASTM B117. ZINC-PLATED FASTENERS DO NOT COMPLY WITH THIS REQUIREMENT.

WELDED JOINTS

1. ALL WELDING OF STEEL MEMBERS AND THEIR CONNECTIONS THAT DEMAND CRITICAL WELDS (DCW) SHALL BE PERFORMED IN ACCORDANCE WITH AWS D1.8/D1.8M. ALL WELDING SHALL BE PERFORMED IN ACCORDANCE WITH A WELDING PROCEDURE SPECIFICATION (WPS) PREPARED IN ACCORDANCE WITH AWS D1.1/D1.8M AND AS APPROVED BY THE ENGINEER OF RECORD.
2. THE WPS VARIABLES SHALL BE WITHIN THE PARAMETERS ESTABLISHED BY THE FILLER METAL MANUFACTURER. THIS MANUFACTURER PRESCRIBED WELDING PARAMETERS SHALL BE SUBMITTED WITH THE WPS.
3. WELDING SHALL NOT COMMENCE UNTIL A WPS HAS BEEN SUBMITTED AND APPROVED BY THE ENGINEER OF RECORD.

CHARPY V-NOTCH (CVN) TOUGHNESS

1. ALL WELDS FOR MEMBERS AND CONNECTIONS THAT ARE PART OF THE SFRS SHALL HAVE A FILLER METAL WITH A MINIMUM CVN TOUGHNESS VALUE OF 20 FT-LB AT 0°F AS DETERMINED BY THE APPROPRIATE AWS A5 CLASSIFICATION TEST METHOD.
2. THE COMPLETE JOINT PENETRATION GROOVE WELDS DESCRIBED BELOW SHALL HAVE A FILLER METAL WITH A MINIMUM CVN TOUGHNESS OF 40 FT-LB AT 70°F FOR A LOWEST ANTICIPATED SERVICE TEMPERATURE OF 50°F OR GREATER. SEE AWS D1.8/D1.8M FOR DETAILED TESTING REQUIREMENTS FOR A LOWEST ANTICIPATED SERVICE TEMPERATURE LESS THAN 50°F.

STEEL DECK

1. ROOF DECKS SHALL BE AS NOTED ON THE DRAWINGS. PROPERTIES ARE AS PER MANUFACTURER'S CATALOG.

2. STEEL ROOF DECK TO BE:

   2A. CLIP-LOC, 26GA STEEL DECK AS MANUFACTURED BY METAL SALES MANUFACTURING CORP. W/ CLIP-LOC CLIPS AND (2) #10x1" LONG PAN HEAD SELF-DRILLING SCREWS AT EACH PERPENDICULAR SUPPORT AND #10x1" LONG PAN HEAD SELF-DRILLING SCREWS AT 12" OC AT PARALLEL SUPPORTS. ICC ESR-2385.

   2B. MAGNA-LOC, 24GA, STEEL DECK AS MANUFACTURED BY METAL SALES MANUFACTURING CORP. W/ MAGNA-LOC CLIPS AND (2) 1/4"x1 1/2" LONG HEX HEAD SELF-DRILLING SCREWS AT EACH PERPENDICULAR SUPPORT AND 1/4"x1 1/2" LONG HEX HEAD SELF-DRILLING SCREWS AT 12" OC AT PARALLEL SUPPORTS. ICC ESR-2385.

   2C. IC72-PANEL, 26GA, STEEL DECK AS MANUFACTURED BY METAL SALES MANUFACTURING CORP. W/ #12x1 1/4" SELF-DRILLING SCREWS @ 14.4" OC AT EACH PERPENDICULAR SUPPORT AND 12" OC ON PARALLEL SUPPORTS. SIDE LAP FASTENERS ARE 1/4"x7/8" SELF-DRILLING SCREWS AT 12" OC. ICC ESR-2385.

CLIP-LOC SECTION PROPERTIES

GA.	WIDTH (in.)	YIELD KSI	WEIGHT PSF	TOP COMPRESSION		BOTTOM COMPRESSION	
				Ixx In^4 /ft	Sxx In^3 /ft	Ixx In^4 /ft	Sxx In^3 /ft
26	16	50	1.0	0.0919	0.0761	0.0473	0.0573

MAGNA-LOC SECTION PROPERTIES

GA.	WIDTH (in.)	YIELD KSI	WEIGHT PSF	TOP COMPRESSION		BOTTOM COMPRESSION	
				Ixx In^4 /ft	Sxx In^3 /ft	Ixx In^4 /ft	Sxx In^3 /ft
24	16 OR 18	50	1.25	0.1785	0.1013	0.0855	0.0754

IC72-PANEL SECTION PROPERTIES

GA.	WIDTH (in.)	YIELD KSI	WEIGHT PSF	TOP COMPRESSION		BOTTOM COMPRESSION	
				Ixx In^4 /ft	Sxx In^3 /ft	Ixx In^4 /ft	Sxx In^3 /ft
26	36	50	0.88	0.071	0.082	0.065	0.066

3. UNITS SHALL BE CONTINUOUS OVER THREE OR MORE SPANS, EXCEPT WHERE THE FRAMING DOES NOT PERMIT. DECK SHALL BEAR 2" MINIMUM AT ALL SUPPORTS.

4. ROOF DECK SHALL BE PAINTED USING THE METAL SALES COLORFAST45 PAINT SYSTEM IN THE OWNER'S COLOR OF CHOICE.

FOUNDATION

1. FOOTINGS ARE DESIGNED BASED ON THE MINIMUM VALUES IN CHAPTER 18A AND INCLUDES THE FOLLOWING INFORMATION:

   W = FOOTING DIAMETER
   D = FOOTING DEPTH BELOW ADJACENT GRADE

   ALLOWABLE BEARING
   ISOLATED FTGS = 1500 PSF (MAX)

   LATERAL SOIL PRESSURE
   ISOLATED FTGS = 100 PSF PER FOOT EMBEDMENT *

   MINIMUM DEPTH OF FOOTINGS SHALL BE AS FOLLOWS:
   24" BELOW ADJACENT EXTERIOR FINISHED GRADE.

   * POLES ARE NOT ADVERSELY AFFECTED BY A 1/2" MOTION AT THE GROUND SURFACE AND SO SHALL BE PERMITTED TO BE DESIGNED USING LATERAL BEARING PRESSURES EQUAL TO TWO TIMES THE VALUES GIVEN PER CHAPTER 18A OF THE CODE

2. CONTRACTOR TO PROVIDE FOR DE-WATERING OF EXCAVATIONS FROM EITHER SURFACE WATER, GROUND WATER OR SEEPAGE, IF REQUIRED.

3. CONTRACTOR SHALL PROVIDE FOR DESIGN AND INSTALLATION OF ALL CRIBBING, SHEATHING AND SHORING REQUIRED AND SHALL BE SOLELY RESPONSIBLE FOR ALL EXCAVATION PROCEDURES INCLUDING LAGGING, SHORING AND PROTECTION OF ADJACENT PROPERTY, STRUCTURES, STREETS AND UTILITIES IN ACCORDANCE WITH ALL NATIONAL, STATE AND LOCAL SAFETY ORDINANCES.

4. EXCAVATION FOR FOOTINGS SHALL BE APPROVED BY THE INSPECTOR PRIOR TO PLACING THE CONCRETE AND REINFORCING. CONTRACTOR TO NOTIFY THE INSPECTOR WHEN INSPECTION OF EXCAVATION IS READY. INSPECTOR TO SUBMIT LETTER OF COMPLIANCE.

5. FOUNDATIONS SHALL BE PLACED AND ESTIMATED ACCORDING TO DEPTHS SHOWN ON DRAWINGS. SHOULD SOIL ENCOUNTERED AT THESE DEPTHS NOT BE APPROVED BY THE INSPECTOR, FOUNDATION ELEVATIONS WILL BE ALTERED BY CONSTRUCTION CHANGE DOCUMENT.

6. FOOTING BACKFILL WITHIN BUILDING AREA SHALL BE MECHANICALLY COMPACTED IN LAYERS IN ACCORDANCE WITH ASTM D-1559 TO 95% AND APPROVED BY THE INSPECTOR. FLOODING WILL NOT BE PERMITTED. ALL FILLS USED TO SUPPORT FOUNDATIONS SHALL BE INSPECTED BY THE INSPECTOR.

7. ALL ABANDONED FOOTINGS, UTILITIES, ETC., SHALL BE REMOVED UNLESS NOTED OTHERWISE.

8. SLABS ON GRADE SHALL BE SUPPORTED ON NATURAL GRADE OR COMPACTED FILL.

REINFORCING STEEL

1. REINFORCING BARS SHALL CONFORM TO THE REQUIREMENTS OF CHAPTER 19A OF THE CODE, ASTM A615, GRADE 60 UNO.

2. BARS SHALL BE CLEAN OF RUST, GREASE, OR OTHER MATERIALS LIKELY TO IMPAIR BOND. ALL REINFORCING BAR BENDS SHALL BE MADE COLD.

3. REINFORCING BAR SPLICES SHALL BE MADE AS INDICATED ON THE DRAWINGS. LAP ALL HORIZONTAL BARS AT CORNERS AND INTERSECTIONS. STAGGER ALL SPLICES UNLESS NOTED OTHERWISE ON PLANS.

4. ALL BARS SHALL BE MARKED SO THEIR IDENTIFICATION CAN BE MADE WHEN THE FINAL IN-PLACE INSPECTION IS MADE.

5. BARS IN SLABS SHALL BE SECURELY SUPPORTED ON WELL-CURED CONCRETE BLOCKS OR APPROVED METAL CHAIRS, PRIOR TO PLACING CONCRETE.

6. REINFORCING STEEL SHALL BE DETAILED IN ACCORDANCE WITH THE "A.C.I. MANUAL OF STANDARD PRACTICE FOR DETAILING REINFORCED CONCRETE STRUCTURES", LATEST EDITION.

7. MILL TEST REPORTS FOR GRADE 60 BARS SHALL BE SUBMITTED TO THE PROJECT INSPECTOR PRIOR TO PLACEMENT OF CONCRETE.

8. CONTINUOUS INSPECTION OF CONCRETE SHALL INCLUDE INSPECTION DURING INSTALLATION OF REINFORCING STEEL. INSPECTION SHALL BE SCHEDULED SO THAT PLACEMENT OF REINFORCING STEEL MAY BE CORRECTED PRIOR TO PLACEMENT OF OVERLYING GRIDS OR REINFORCING STEEL.

9. CONCRETE PROTECTION FOR REINFORCEMENT CAST-IN-PLACE CONCRETE (NON-PRESTRESSED). THE FOLLOWING MINIMUM CONCRETE COVER SHALL BE PROVIDED FOR REINFORCEMENT

   A. CONCRETE CAST AGAINST AND PERMANENTLY EXPOSED TO EARTH: 3"

   B. CONCRETE EXPOSED TO EARTH OR WEATHER:

   NO. 6 THROUGH NO. 18 BAR: 2"
   NO. 5 BAR, W31 OR D31 WIRE & SMALLER: 1 1/2"

CONCRETE

1. ALL CONCRETE CONSTRUCTION SHALL CONFORM WITH CHAPTER 19A OF THE CODE AND WITH THE PROVISIONS OF ACI 318, 2019 EDITION.

2. REINFORCED CONCRETE IS DESIGNED BY THE "ULTIMATE STRENGTH DESIGN METHOD".

3. CONCRETE MIXES SHALL BE DESIGNED BY THE APPROVED TESTING LABORATORY AND APPROVED BY THE STRUCTURAL ENGINEER. THE COMPRESSIVE STRENGTH OF THE CONCRETE SHALL BE PROPORTIONED BASED ON ACI 318.

4. SCHEDULE OF STRUCTURAL CONCRETE 28-DAY STRENGTH AND TYPES: [LOCATION IN STRUCTURE, STRENGTH (PSI), DENSITY (PCF), W/C RATIO]

   ALL CONCRETE FOOTINGS = 4500 PSI, 150 PCF, 0.45
   CONCRETE SLAB ON GRADE = 3000 PSI, 150 PCF, 0.45

5. PORTLAND CEMENT SHALL CONFORM TO ASTM C 150, TYPE V (IF IN CONTACT WITH SOILS AT FOUNDATIONS AND SLAB ON GRADE)).

6. AGGREGATE FOR HARDROCK CONCRETE SHALL CONFORM TO ALL REQUIREMENTS AND TESTS OF ASTM C 33 AND PROJECT SPECIFICATIONS. EXCEPTIONS MAY BE USED ONLY WITH PERMISSION OF THE STRUCTURAL ENGINEER.

7. CONCRETE MIXING OPERATION, ETC. SHALL CONFORM TO ASTM C 94.

8. PLACEMENT OF CONCRETE SHALL CONFORM TO ACI 318 AND PROJECT SPECIFICATIONS. CLEAN AND ROUGHEN TO 1/4" AMPLITUDE ALL CONCRETE SURFACES AGAINST WHICH NEW CONCRETE IS TO BE PLACED.

9. ALL REINFORCING BARS, ANCHOR BOLTS AND OTHER CONCRETE INSERTS SHALL BE WELL SECURED IN POSITION PRIOR TO PLACING CONCRETE.

10. THE SPECIAL INSPECTION FOR CONCRETE CONSTRUCTION SHALL BE AS REQUIRED BY SECTION 1705A.3 OF THE CODE AND CONSTRUCTION DOCUMENTS.

Project Specific Approval

IDENTIFICATION STAMP
DIV. OF THE STATE ARCHITECT
APP: 02-123587 INC:
REVIEWED FOR
SS ☑ FLS ☑ ACS ☑
DATE: 01/16/2026

PRE-CHECKED
DUGOUT STRUCTURES

Owner

SPORTSFIELD SPECIALTIES
WWW.SPORTSFIELDSPECIALTIES.COM

41155 State Highway 10,
PO Box 231 Delhi, NY 13753

Issue/Revision

Issue No.	Rev. No.	Description	Date
		DSA SUBMITTAL	09/19/2023

~~APPROVED~~
~~DIV. OF THE STATE ARCHITECT~~
~~APP: 04-122814 PC~~
~~REVIEWED FOR~~
~~SS ☑ FLS ☑ ACS ☑ CG ☐~~
~~DATE: 02/19/2024~~

kpff
18400 Von Karman Ave., Suite 600
Irvine, CA 92612
O: 949.252.1022
F: 949.252.8082
www.kpff.com

PRE-CHECK (PC) DOCUMENT

CODE: 2022 CBC

A SEPARATE PROJECT APPLICATION FOR CONSTRUCTION IS REQUIRED.

Seal/Signature

Exp. 3-31-24

Sheet Title:
GENERAL NOTES, ABBREVIATIONS AND SYMBOLS

Designed By: CA/JS	Project Number: 2200334
Drawn By: FC	Scale: AS NOTED
Checked By: BT	Sheet Number: SFPC-2
Date: 2023-07-20	

CANTILEVER DUGOUT FOUNDATION AND SLAB PLAN

1"=1'-0" 2

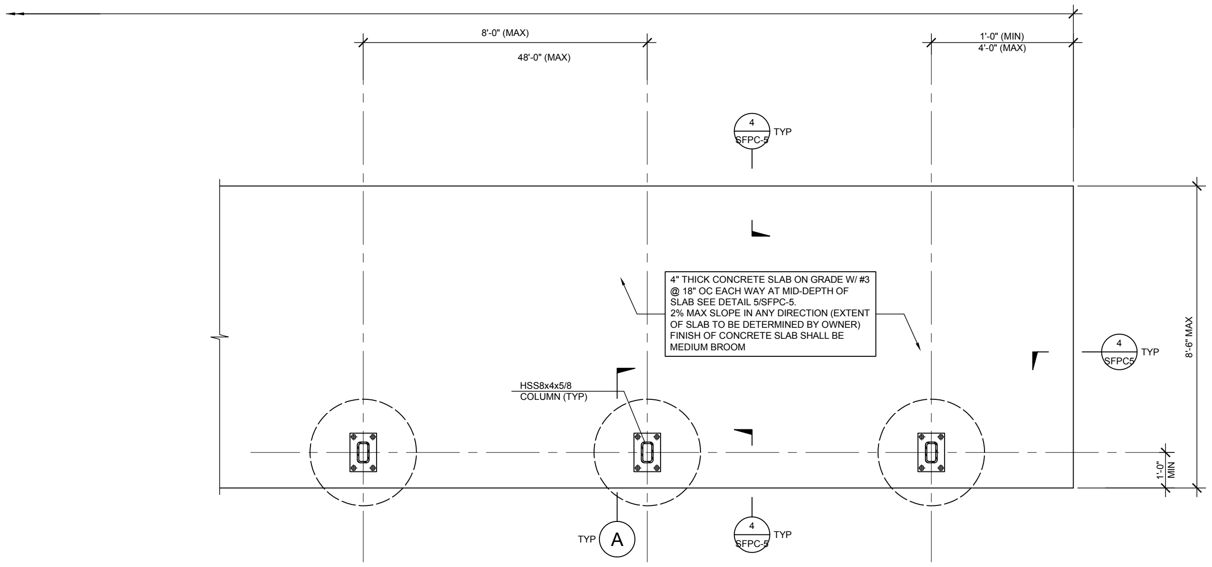
8'-0" (MAX)
48'-0" (MAX)
1'-0" (MIN)
4'-0" (MAX)
4 SFPC-5 TYP
4" THICK CONCRETE SLAB ON GRADE W/ #3 @ 18" OC EACH WAY AT MID-DEPTH OF SLAB SEE DETAIL 5/SFPC-5.
2% MAX SLOPE IN ANY DIRECTION (EXTENT OF SLAB TO BE DETERMINED BY OWNER)
FINISH OF CONCRETE SLAB SHALL BE MEDIUM BROOM
HSS8x4x5/8
COLUMN (TYP)
8'-6" MAX
1'-0" MIN
TYP A

FOUNDATION AND SLAB PLAN

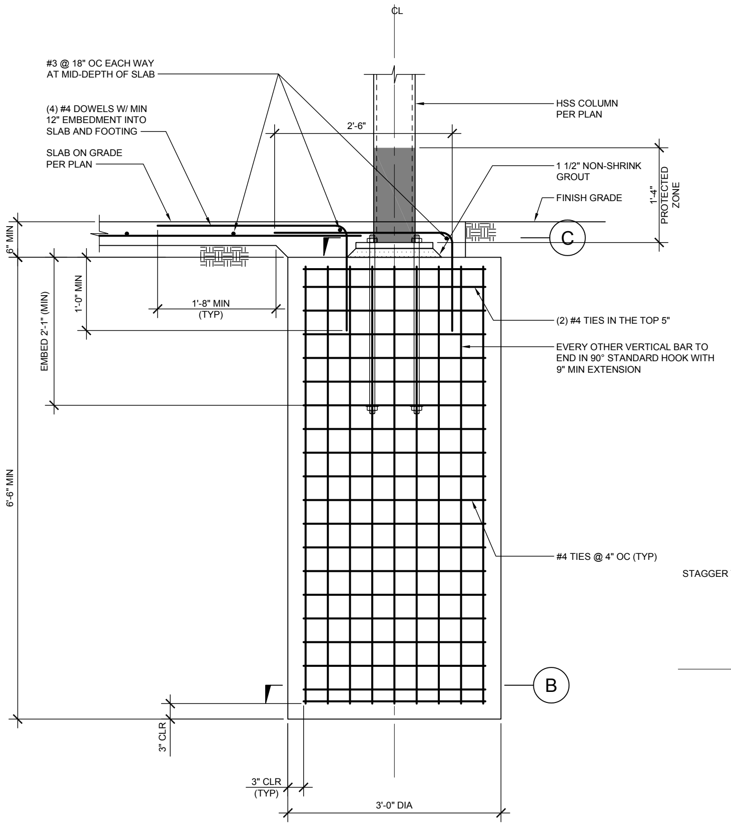
CL
#3 @ 18" OC EACH WAY AT MID-DEPTH OF SLAB
(4) #4 DOWELS W/ MIN 12" EMBEDMENT INTO SLAB AND FOOTING
SLAB ON GRADE PER PLAN
HSS COLUMN PER PLAN
2'-6"
1 1/2" NON-SHRINK GROUT
FINISH GRADE
1'-4" PROTECTED ZONE
C
6" MIN
1'-0" MIN
1'-8" MIN (TYP)
EMBED 2'-1" (MIN)
(2) #4 TIES IN THE TOP 5"
EVERY OTHER VERTICAL BAR TO END IN 90° STANDARD HOOK WITH 9" MIN EXTENSION
6'-6" MIN
#4 TIES @ 4" OC (TYP)
B
3" CLR
3" CLR (TYP)
3'-0" DIA

A FOOTING AND ANCHORAGE

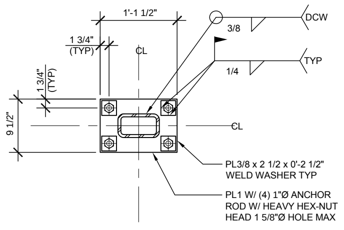
1'-1 1/2"
1 3/4" (TYP)
1 3/4" (TYP)
9 1/2"
CL
3/8
DCW
1/4
TYP
PL3/8 x 2 1/2 x 0'-2 1/2" WELD WASHER TYP
PL1 W/ (4) 1"Ø ANCHOR ROD W/ HEAVY HEX-NUT HEAD 1 5/8"Ø HOLE MAX

C COLUMN BASE PLATE
PLAN VIEW

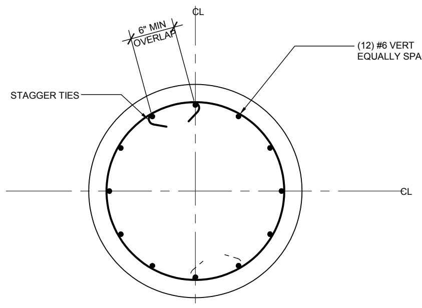
CL
6" MIN OVERLAP
(12) #6 VERT EQUALLY SPACED
STAGGER TIES
CL

B FOOTING SECTION
PLAN VIEW

GAMESHADE DUGOUT FOUNDATION AND SLAB PLAN

1"=1'-0" 1

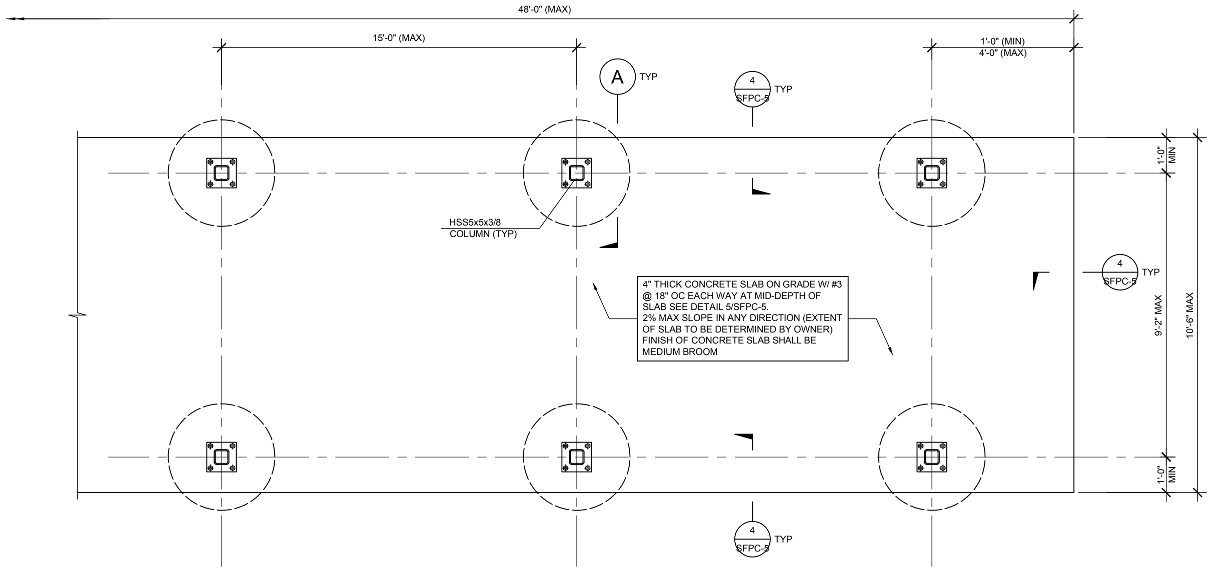
48'-0" (MAX)
15'-0" (MAX)
1'-0" (MIN)
4'-0" (MAX)
A TYP
4 SFPC-5 TYP
HSS5x5x3/8
COLUMN (TYP)
4" THICK CONCRETE SLAB ON GRADE W/ #3 @ 18" OC EACH WAY AT MID-DEPTH OF SLAB SEE DETAIL 5/SFPC-5.
2% MAX SLOPE IN ANY DIRECTION (EXTENT OF SLAB TO BE DETERMINED BY OWNER)
FINISH OF CONCRETE SLAB SHALL BE MEDIUM BROOM
1'-0" MIN
9'-2" MAX
10'-6" MAX
1'-0" MIN

FOUNDATION AND SLAB PLAN

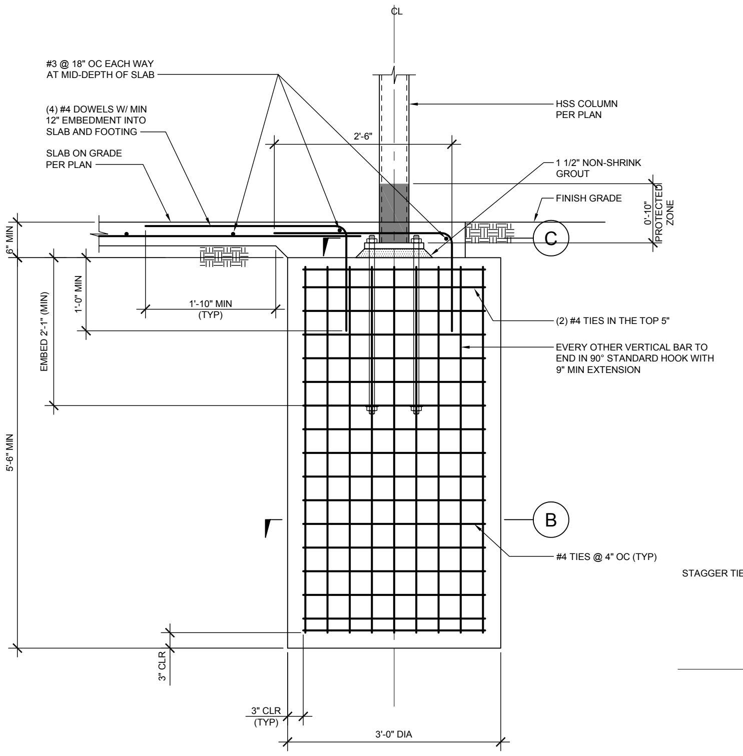
CL
#3 @ 18" OC EACH WAY AT MID-DEPTH OF SLAB
(4) #4 DOWELS W/ MIN 12" EMBEDMENT INTO SLAB AND FOOTING
SLAB ON GRADE PER PLAN
HSS COLUMN PER PLAN
2'-6"
1 1/2" NON-SHRINK GROUT
FINISH GRADE
0'-10" PROTECTED ZONE
C
6" MIN
1'-0" MIN
1'-10" MIN (TYP)
EMBED 2'-1" (MIN)
(2) #4 TIES IN THE TOP 5"
EVERY OTHER VERTICAL BAR TO END IN 90° STANDARD HOOK WITH 9" MIN EXTENSION
5'-6" MIN
B
#4 TIES @ 4" OC (TYP)
3" CLR
3" CLR (TYP)
3'-0" DIA

A FOOTING AND ANCHORAGE

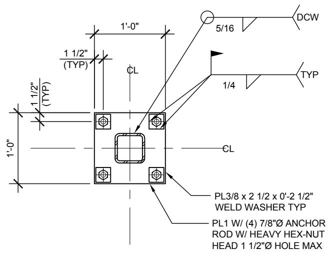
1'-0"
1 1/2" (TYP)
1 1/2" (TYP)
1'-0"
CL
5/16
DCW
1/4
TYP
PL3/8 x 2 1/2 x 0'-2 1/2" WELD WASHER TYP
PL1 W/ (4) 7/8"Ø ANCHOR ROD W/ HEAVY HEX-NUT HEAD 1 1/2"Ø HOLE MAX

C COLUMN BASE PLATE
PLAN VIEW

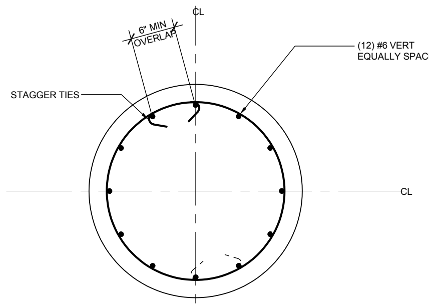
CL
6" MIN OVERLAP
(12) #6 VERT EQUALLY SPACED
STAGGER TIES
CL

B FOOTING SECTION
PLAN VIEW

Project Specific Approval

IDENTIFICATION STAMP
DIV. OF THE STATE ARCHITECT
APP: 02-123587 INC:
REVIEWED FOR
SS ☑ FLS ☑ ACS ☑
DATE: 01/16/2026

PRE-CHECKED
DUGOUT STRUCTURES

Owner

SPORTSFIELD SPECIALTIES
WWW.SPORTSFIELDSPECIALTIES.COM

41155 State Highway 10,
PO Box 231 Delhi, NY 13753

Issue/Revision

Issue No.	Rev. No.	Description	Date
		DSA SUBMITTAL	09/19/2023

~~APPROVED~~
~~DIV. OF THE STATE ARCHITECT~~
~~APP: 04-122824 PC~~
~~REVIEWED FOR~~
~~SS ☑ FLS ☑ ACS ☑ CG ☐~~
~~DATE: 02/19/2024~~

kpff
18400 Von Karman Ave., Suite 600
Irvine, CA 92612
O: 949.252.1022
F: 949.252.8082
www.kpff.com

PRE-CHECK (PC) DOCUMENT

CODE: 2022 CBC

A SEPARATE PROJECT APPLICATION FOR CONSTRUCTION IS REQUIRED.

Seal/Signature

No. S 3866
Exp. 3-31-24

Sheet Title:
FOUNDATION, SLAB PLANS AND DETAILS

Designed By: CA/JS	Project Number: 2200334
Drawn By: FC	Scale: AS NOTED
Checked By: BT	Sheet Number: SFPC-3
Date: 2023-07-20	

Date: Feb 05, 2024, 2:22pm - Drawing: S:\Projects\2022\2200334 - DSA 2022 PC for Dugout Structures\DRAWINGS\AutoCAD\SFPC-3.dwg - Layout: SFPC-3 - Printed By: FCarreon - Profile: KPFF-ARIAL - Job Name: DSA PC Shade Economy- PM: JV - PD: ELG
Xrefs: 2200334TB.dwg

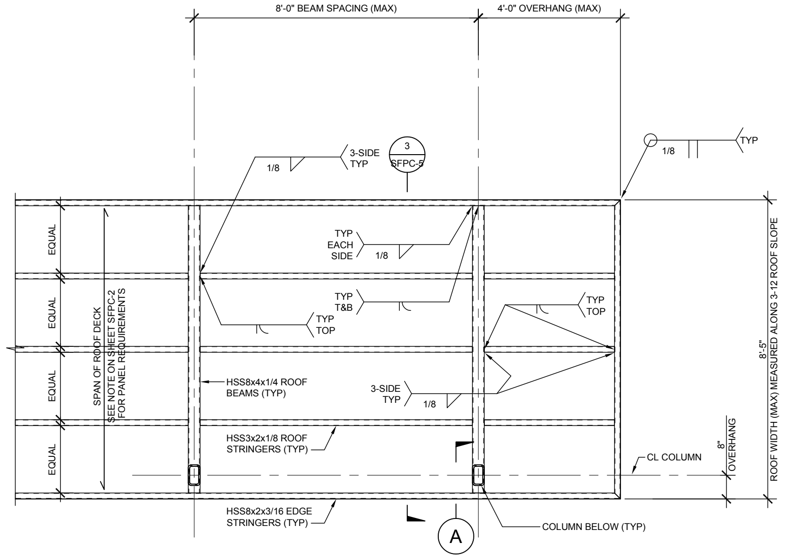
8'-0" BEAM SPACING (MAX)
4'-0" OVERHANG (MAX)
3-SIDE TYP
1/8
3 SFPC-5
1/8
TYP
TYP EACH SIDE
1/8
TYP T&B
TYP TOP
TYP TOP
EQUAL
EQUAL
EQUAL
EQUAL
SPAN OF ROOF DECK
SEE NOTE ON SHEET SFPC-2 FOR PANEL REQUIREMENTS
HSS8x4x1/4 ROOF BEAMS (TYP)
3-SIDE TYP
1/8
HSS3x2x1/8 ROOF STRINGERS (TYP)
CL COLUMN
8" OVERHANG
8'-5" ROOF WIDTH (MAX) MEASURED ALONG 3-12 ROOF SLOPE
HSS8x2x3/16 EDGE STRINGERS (TYP)
A
COLUMN BELOW (TYP)

CANTILEVER DUGOUT ROOF PLAN - 8" OVERHANG

1/2"=1'-0"

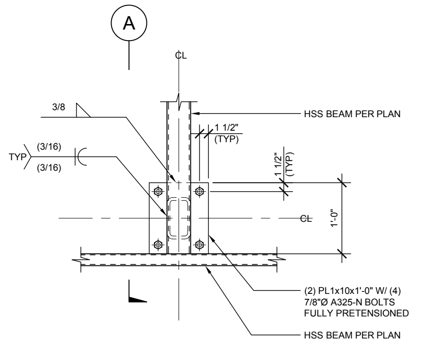
A
CL
3/8
HSS BEAM PER PLAN
1 1/2" (TYP)
TYP
(3/16)
(3/16)
1 1/2" (TYP)
1'-0"
CL
(2) PL1x10x1'-0" W/ (4) 7/8"Ø A325-N BOLTS FULLY PRETENSIONED
HSS BEAM PER PLAN

PLAN VIEW

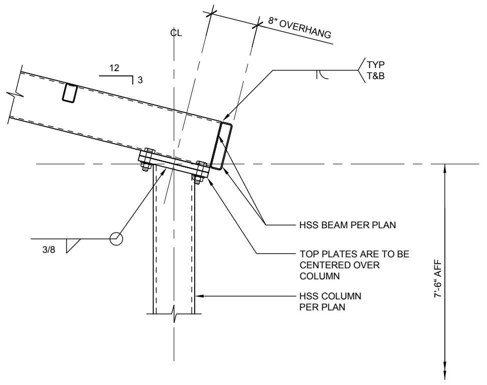
CL
8" OVERHANG
12
3
TYP T&B
HSS BEAM PER PLAN
3/8
TOP PLATES ARE TO BE CENTERED OVER COLUMN
HSS COLUMN PER PLAN
7'-6" AFF

A TOP PLATE CONNECTION SECTION

CANTILEVER DUGOUT ROOF PLAN - 8" OVERHANG 1"=1'-0" **3**

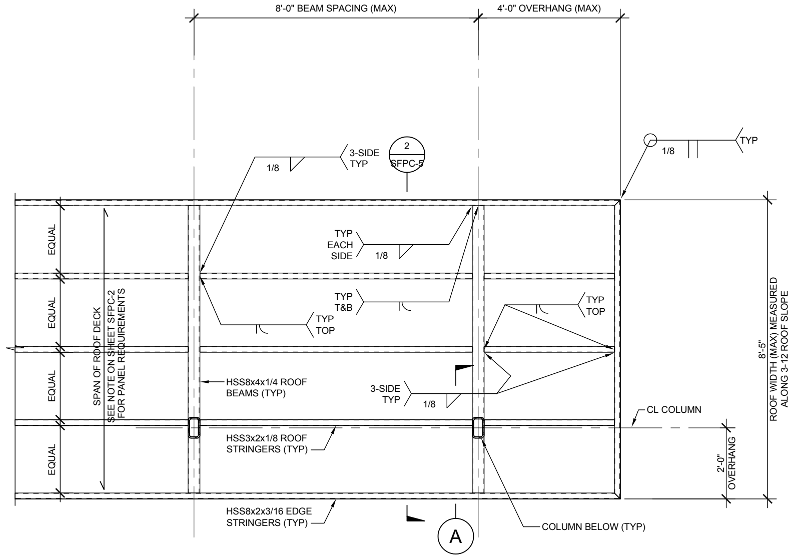
8'-0" BEAM SPACING (MAX)
4'-0" OVERHANG (MAX)
3-SIDE TYP
1/8
2 SFPC-5
1/8
TYP
TYP EACH SIDE
1/8
TYP T&B
TYP TOP
TYP TOP
EQUAL
EQUAL
EQUAL
EQUAL
SPAN OF ROOF DECK
SEE NOTE ON SHEET SFPC-2 FOR PANEL REQUIREMENTS
HSS8x4x1/4 ROOF BEAMS (TYP)
3-SIDE TYP
1/8
HSS3x2x1/8 ROOF STRINGERS (TYP)
CL COLUMN
2'-0" OVERHANG
8'-5" ROOF WIDTH (MAX) MEASURED ALONG 3-12 ROOF SLOPE
HSS8x2x3/16 EDGE STRINGERS (TYP)
A
COLUMN BELOW (TYP)

CANTILEVER DUGOUT ROOF PLAN - 24" OVERHANG

1/2"=1'-0"

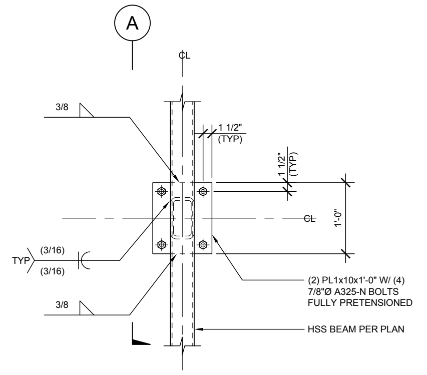
A
CL
3/8
1 1/2" (TYP)
1 1/2" (TYP)
1'-0"
CL
TYP
(3/16)
(3/16)
3/8
(2) PL1x10x1'-0" W/ (4) 7/8"Ø A325-N BOLTS FULLY PRETENSIONED
HSS BEAM PER PLAN

PLAN VIEW

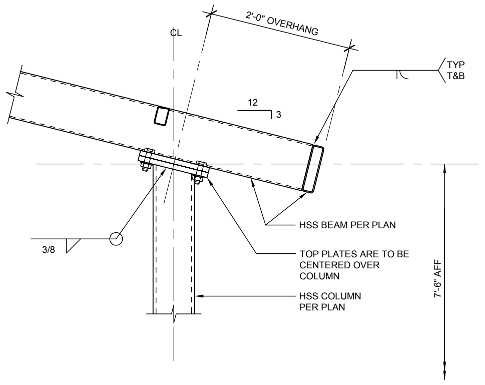
CL
2'-0" OVERHANG
TYP T&B
12
3
HSS BEAM PER PLAN
3/8
TOP PLATES ARE TO BE CENTERED OVER COLUMN
HSS COLUMN PER PLAN
7'-6" AFF

A TOP PLATE CONNECTION SECTION

CANTILEVER DUGOUT ROOF PLAN - 24" OVERHANG 1"=1'-0" **2**

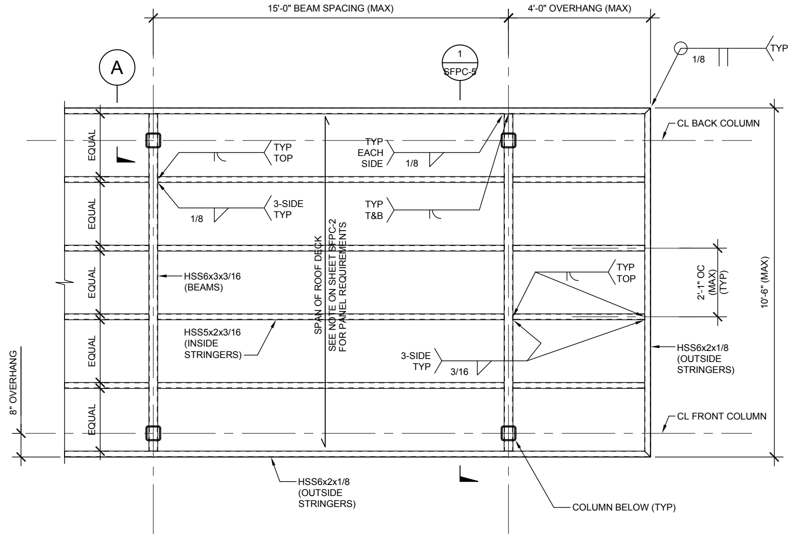
15'-0" BEAM SPACING (MAX)
4'-0" OVERHANG (MAX)
A
1 SFPC-5
1/8
TYP
CL BACK COLUMN
TYP TOP
TYP EACH SIDE
1/8
3-SIDE TYP
1/8
TYP T&B
EQUAL
EQUAL
EQUAL
EQUAL
EQUAL
HSS6x3x3/16 (BEAMS)
SPAN OF ROOF DECK
SEE NOTE ON SHEET SFPC-2 FOR PANEL REQUIREMENTS
TYP TOP
2'-1" OC (MAX) (TYP)
10'-6" (MAX)
HSS5x2x3/16 (INSIDE STRINGERS)
3-SIDE TYP
3/16
HSS6x2x1/8 (OUTSIDE STRINGERS)
8" OVERHANG
CL FRONT COLUMN
HSS6x2x1/8 (OUTSIDE STRINGERS)
COLUMN BELOW (TYP)

GAMESHADE DUGOUT ROOF PLAN

1/2"=1'-0"

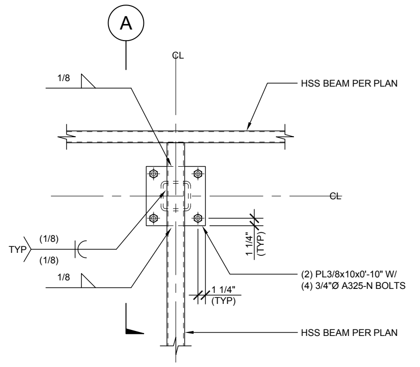
A
CL
1/8
HSS BEAM PER PLAN
CL
TYP
(1/8)
(1/8)
1/8
1 1/4" (TYP)
1 1/4" (TYP)
(2) PL3/8x10x0'-10" W/ (4) 3/4"Ø A325-N BOLTS
HSS BEAM PER PLAN

PLAN VIEW

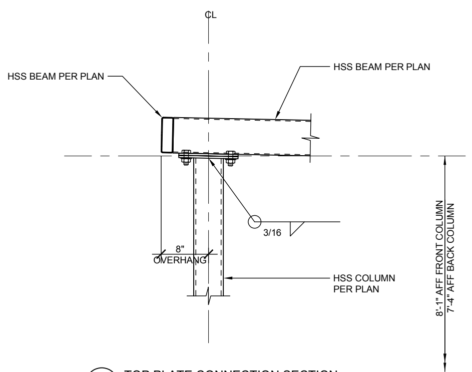
CL
HSS BEAM PER PLAN
HSS BEAM PER PLAN
8" OVERHANG
3/16
HSS COLUMN PER PLAN
8'-1" AFF FRONT COLUMN
7'-4" AFF BACK COLUMN

A TOP PLATE CONNECTION SECTION

GAMESHADE DUGOUT ROOF PLAN 1"=1'-0" **1**

Project Specific Approval

IDENTIFICATION STAMP
DIV. OF THE STATE ARCHITECT
APP: 02-123587 INC:
REVIEWED FOR
SS ☑ FLS ☑ ACS ☑
DATE: 01/16/2026

PRE-CHECKED
DUGOUT STRUCTURES

Owner

SPORTSFIELD SPECIALTIES
WWW.SPORTSFIELDSPECIALTIES.COM

41155 State Highway 10,
PO Box 231 Delhi, NY 13753

Issue/Revision

Issue No.	Rev. No.	Description	Date
		DSA SUBMITTAL	09/19/2023

~~APPROVED~~
~~DIV. OF THE STATE ARCHITECT~~
~~APP: 04-122824 PC~~
~~REVIEWED FOR~~
~~SS ☑ FLS ☑ ACS ☑ CG ☐~~
~~DATE: 02/19/2024~~

kpff
18400 Von Karman Ave., Suite 600
Irvine, CA 92612
O: 949.252.1022
F: 949.252.8082
www.kpff.com

PRE-CHECK (PC) DOCUMENT

CODE: 2022 CBC

A SEPARATE PROJECT APPLICATION FOR CONSTRUCTION IS REQUIRED.

Seal/Signature

WILLIAM H. THOR...
No. S 3066
Exp. 3-31-24

Sheet Title:
ROOF PLANS
AND DETAILS

Designed By:	Project Number:
CA/JS	2200334
Drawn By: FC	Scale: AS NOTED
Checked By: BT	Sheet Number: SFPC-4
Date: 2023-07-20	

Date: Feb 05, 2024, 2:22pm - Drawing: S:\Projects\2022\2200334 - DSA 2022 PC for Dugout Structures\DRAWINGS\AutoCAD\SFPC-4.dwg - Layout: SFPC-4 - Printed By: FCarreon - Profile: KPFF-ARIAL - Job Name: DSA PC Shade Economy- PM: JV - PD: ELG
Xrefs: 2200334TB.dwg

Date: Feb 05, 2024, 2:24pm - Drawing: S:\Projects\2022\2200334 - DSA 2022 PC for Dugout Structures\DRAWINGS\AutoCAD\SFPC-5.dwg - Layout: SFPC-5 - Printed By: FCarreon - Profile: KPFF-ARIAL - Job Name: DSA PC Shade Economy- PM: JV - PD: ELG
Xrefs: 2200334TB.dwg

- NTS -

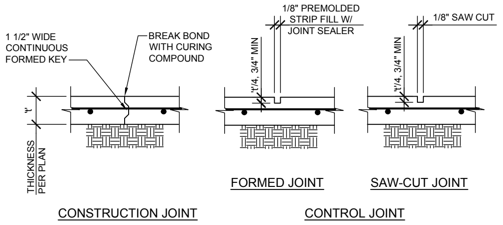
1 1/2" WIDE CONTINUOUS FORMED KEY
BREAK BOND WITH CURING COMPOUND
't'
THICKNESS PER PLAN
1/8" PREMOLDED STRIP FILL W/ JOINT SEALER
't'/4, 3/4" MIN
1/8" SAW CUT
't'/4, 3/4" MIN
FORMED JOINT
SAW-CUT JOINT
CONSTRUCTION JOINT
CONTROL JOINT

NOTES:

1. CONTROL JOINTS SHALL BE LOCATED AT COLUMN CENTER LINES AND AT 20'-0" OC MAX AND EVERY 400 SQUARE FEET.
2. IF SAW-CUT CONTROL JOINTS ARE USED, SAW-CUT NO LATER THAN 12 HOURS AFTER CONCRETE FINISHING.
3. CONSTRUCTION JOINT SHALL BE LOCATED AS PER NOTES #1 AND #2 UNLESS SPECIFICALLY INDICATED ON PLANS.

SLAB ON GRADE CONTROL JOINTS

NTS 6

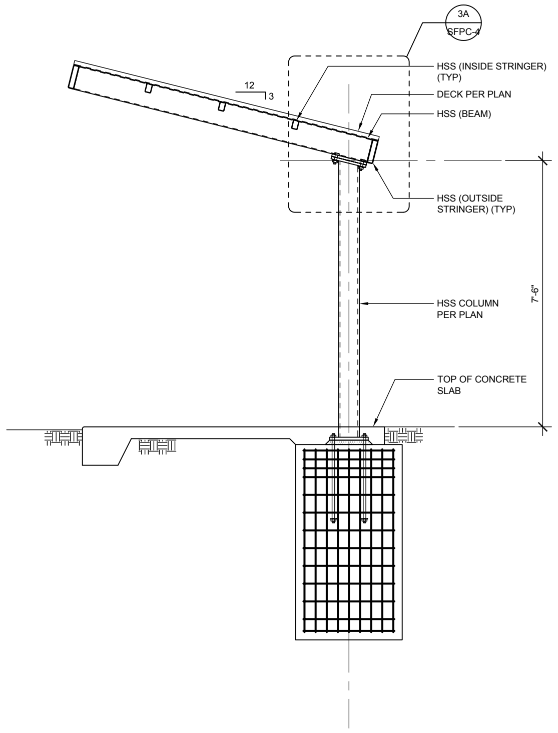
3A
SFPC-4
12
3
HSS (INSIDE STRINGER) (TYP)
DECK PER PLAN
HSS (BEAM)
HSS (OUTSIDE STRINGER) (TYP)
HSS COLUMN PER PLAN
7'-6"
TOP OF CONCRETE SLAB

CANTILEVER DUGOUT - 8" OVERHANG SECTION

1/2"=1'-0" 3

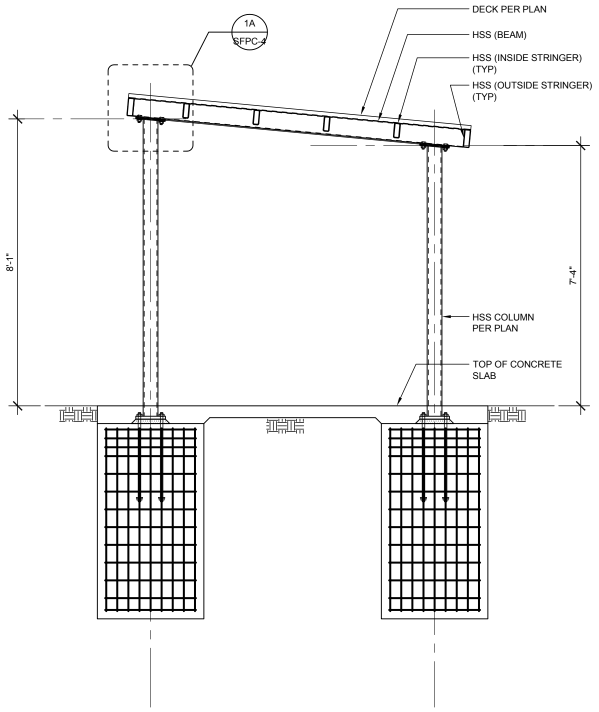
1A
SFPC-4
DECK PER PLAN
HSS (BEAM)
HSS (INSIDE STRINGER) (TYP)
HSS (OUTSIDE STRINGER) (TYP)
8'-1"
7'-4"
HSS COLUMN PER PLAN
TOP OF CONCRETE SLAB

GAMESHADE DUGOUT - SECTION

1/2"=1'-0" 1

- NTS -

- NTS -

- NTS -

- NTS -

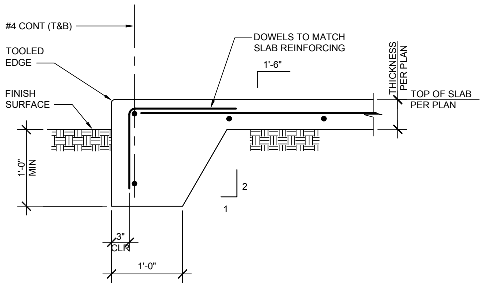
#4 CONT (T&B)
TOOLED EDGE
FINISH SURFACE
DOWELS TO MATCH SLAB REINFORCING
1'-6"
THICKNESS PER PLAN
TOP OF SLAB PER PLAN
1'-0" MIN
2
1
3" CLR
1'-0"

EDGE OF SLAB ON GRADE

NTS 4

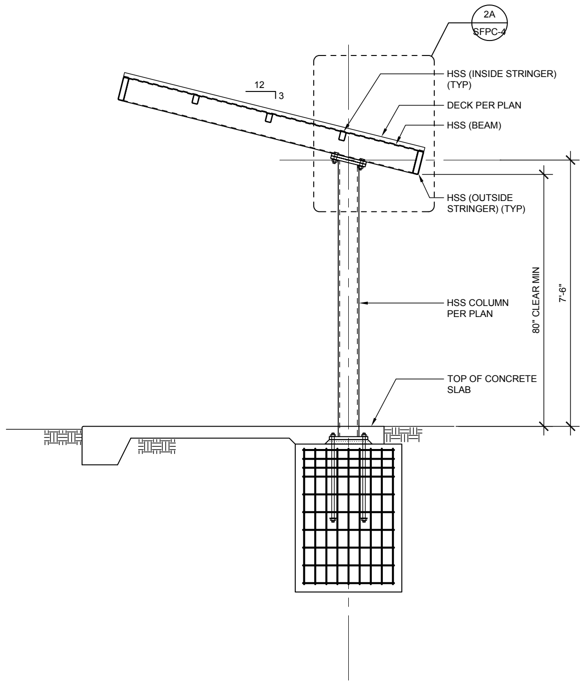
2A
SFPC-4
12
3
HSS (INSIDE STRINGER) (TYP)
DECK PER PLAN
HSS (BEAM)
HSS (OUTSIDE STRINGER) (TYP)
HSS COLUMN PER PLAN
80" CLEAR MIN
7'-6"
TOP OF CONCRETE SLAB

- NTS -

- NTS -

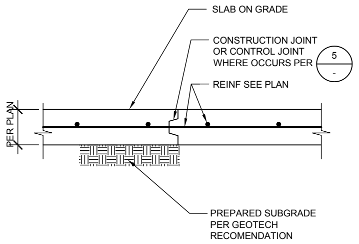
SLAB ON GRADE
CONSTRUCTION JOINT OR CONTROL JOINT WHERE OCCURS PER
5
-
REINF SEE PLAN
PER PLAN
PREPARED SUBGRADE PER GEOTECH RECOMENDATION

TYPICAL SLAB ON GRADE

NTS 5

CANTILEVER DUGOUT - 24" OVERHANG SECTION

1/2"=1'-0" 2

Project Specific Approval

IDENTIFICATION STAMP
DIV. OF THE STATE ARCHITECT
APP: 02-123587 INC:
REVIEWED FOR
SS ☑ FLS ☑ ACS ☑
DATE: 01/16/2026

PRE-CHECKED
DUGOUT STRUCTURES

Owner

SPORTSFIELD SPECIALTIES
WWW.SPORTSFIELDSPECIALTIES.COM

41155 State Highway 10,
PO Box 231 Delhi, NY 13753

Issue/Revision

Issue No.	Rev. No.	Description	Date
		DSA SUBMITTAL	09/19/2023

~~APPROVED~~
~~DIV. OF THE STATE ARCHITECT~~
~~APP: 04-122824 PC~~
~~REVIEWED FOR~~
~~SS ☑ FLS ☑ ACS ☑ CG ☐~~
~~DATE: 02/19/2024~~

kpff
18400 Von Karman Ave., Suite 600
Irvine, CA 92612
O: 949.252.1022
F: 949.252.8082
www.kpff.com

PRE-CHECK (PC) DOCUMENT

CODE: 2022 CBC

A SEPARATE PROJECT APPLICATION FOR CONSTRUCTION IS REQUIRED.

Seal/Signature

Exp. 3-31-24

Sheet Title:

SECTIONS AND DETAILS

Designed By: CA/JS	Project Number: 2200334
Drawn By: FC	Scale: AS NOTED
Checked By: BT	Sheet Number: SFPC-5
Date: 2023-07-20	

NEVCO DSA P.C. 04-124534

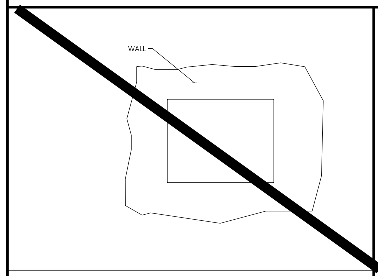

INDOOR WALL MOUNTED ASSEMBLY
SHEETS: SB0.1, SB0.2, SB6.1

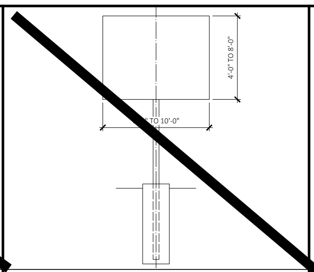

MARQUEE: COLUMN EMBEDDED IN CAISSON
SHEETS: SB0.1, SB0.2, SB1.1, SB5.1

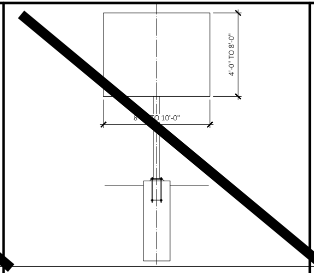

MARQUEE: CAISSON-BOLTED COLUMN
SHEETS: SB0.1, SB0.2, SB1.2, SB5.1

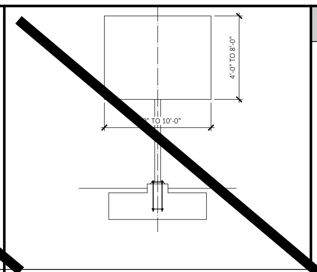

MARQUEE: MAT FOOTING
SHEETS: SB0.1, SB0.2, SB1.3, SB5.1

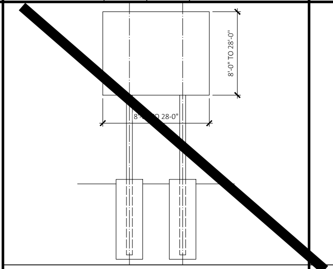

2 COLUMN: COLUMN EMBEDDED IN CAISSON
SHEETS: SB0.1, SB0.2, SB2.1, SB5.1

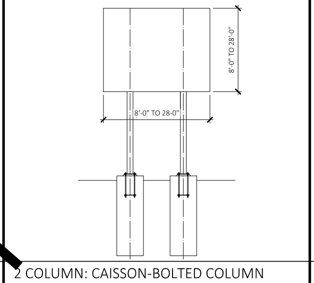

2 COLUMN: CAISSON-BOLTED COLUMN
SHEETS: SB0.1, SB0.2, SB2.2, SB5.1

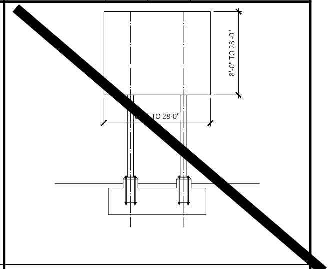

2 COLUMN: MAT FOOTING
SHEETS: SB0.1, SB0.2, SB2.3, SB5.1

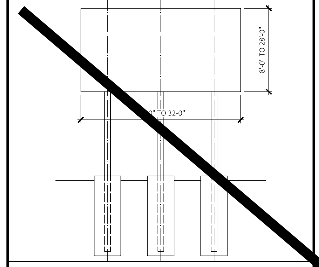

3 COLUMN: COLUMN EMBEDDED IN CAISSON
SHEETS: SB0.1, SB0.2, SB3.1, SB5.1

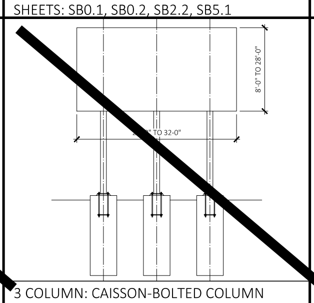

3 COLUMN: CAISSON-BOLTED COLUMN
SHEETS: SB0.1, SB0.2, SB3.2, SB5.1

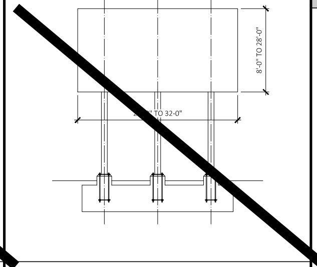

3 COLUMN: MAT FOOTING
SHEETS: SB0.1, SB0.2, SB3.3, SB5.1

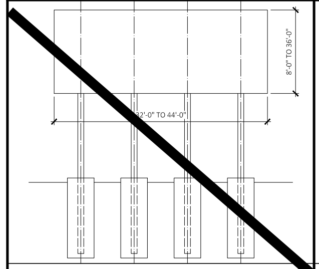

4 COLUMN: COLUMN EMBEDDED IN CAISSON
SHEETS: SB0.1, SB0.2, SB4.1, SB5.1

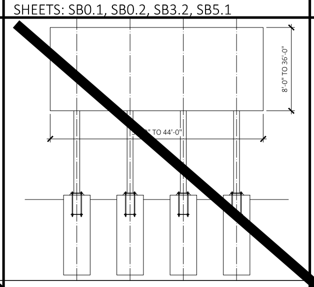

4 COLUMN: CAISSON-BOLTED COLUMN
SHEETS: SB0.1, SB0.2, SB4.2, SB5.1

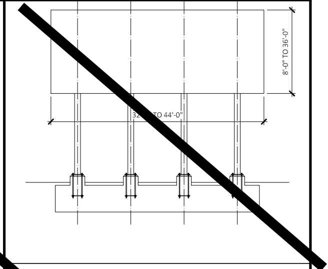

4 COLUMN: MAT FOOTING
SHEETS: SB0.1, SB0.2, SB4.3, SB5.1

TABLE C - SITE SPECIFIC SEISMIC AND WIND VALUES

EARTHQUAKE DESIGN DATA	MAXIMUM		
Mapped Spectral Response Accelerations (Maximum)	S_S= 3.73 g S_1= 1.0 g	≥ ≥	S_S= 0.624 g S_1= 0390 g
Site Class	D		D
Spectral Response Coefficients (Maximum)	S_{DS}= 2.49 g S_{D1}= 1.0 g	≥ ≥	S_{DS}= 0.542 g S_{D1}= 0.541 g
Wind Design Data	Value		Value
Design Wind Speed (3-sec gust), V_{ULT}	100 mph	≥	95 mph
Exposure Category	C		C

Earthquake and Wind design data can be found at: https://ascehazardtool.org/

TABLE D - SITE FLOOD ZONE

THIS SECTION NOT REQUIRED IF SITE IS IN FLOOD ZONE X

Geotechnical Engineer: Not Required

Letter Dated: Not Required

TABLE B - STRUCTURAL DESIGN VALUES

All values reported are unfactored and strength level, unless noted otherwise

Gravity Design Data	Value
Dead Loads:	
Sign Dead Load	PER SCHEDULE
Snow Loads:	
Ground Snow Load, P_g (Maximum)	30 psf
Deflection Criteria:	
Sign, Wind Load	H/240
Wind Design Data	**Value**
Design Wind Speed (3-sec gust), V_{ULT}	100 mph
Design Wind Speed (3-sec gust), V_{ASD}	77 mph
Risk Category	II
Exposure Category	C
Applicable Internal Pressure Coefficient	± 0.18
Design Wind Pressure(s) for Components & Cladding (Not specifically designed by the Registered Design Professional, and to be modified by applicable factors per ASCE 7)	q_z=21.8xK_z psf K_zVARIES
Earthquake Design Data	**Value**
Risk Category	II
Importance Factor, I_e	1.0
Mapped Spectral Response Accelerations (Maximum)	S_S= 3.73 g S_1= 1.0 g
Site Class	A through E
Spectral Response Coefficients (Maximum)	S_{DS}= 2.49 g S_{D1}= 1.0 g
Seismic Design Category	E
Analysis Procedure Used	Equivalent Lateral Force Procedure (ASCE 7, 12.8)
Basic Seismic-Force Resisting System	Non-Building Structure, ASCE 7-16 Chapter 15
Response Modification Factor, Signs and Billboards Table 15.4-2	R= 3.0
Seismic Response Coefficient	C_S= 0.83
Design Base Shear	V= C_S w_D
Flood Design	
When the scoreboard is located in a flood zone other than Zone X, a letter stamped and signed from a Geotechnical Engineer is needed to validate allowable soil values specified in the PC are still applicable.	
Geotechnical Design Data	**Value**
Geotechnical Design Based on: 2022 California Building Code, Chapter 18A, Table 1806.A.2 (Class 5 Material)	
Allowable Soil Bearing Pressure (DL + LL)	1,500 psf
Design Passive Pressure, P_p (Tabular value has been increased per CBC Section 1806A.3.4 for pier design)	100 pcf
Design Skin Friction, f_s	100 psf

SCOREBOARD ASSEMBLY WORKSHEET (TABLE A, C & D) INSTRUCTIONS

STEP 1: DETERMINE DESIRED SCOREBOARD ASSEMBLY. FILL OUT SCOREBOARD ASSEMBLY TABLE (TABLE A BELOW). PROVIDE NEVCO PART NUMBERS, PART HEIGHT, PART WIDTH, AND PART WEIGHTS.

STEP 2: DETERMINE TOTAL ASSEMBLY HEIGHT, WIDTH, AND WEIGHT, TABLE A

STEP 3: BASED ON TOTAL ASSEMBLY WIDTH, DETERMINE THE NUMBER OF REQUIRED COLUMNS.
SEE SHEETS SB1.X FOR 1 COLUMN ASSEMBLY OPTIONS
SB2.X FOR 2 COLUMN ASSEMBLY OPTIONS
SB3.X FOR 3 COLUMN ASSEMBLY OPTIONS
SB4.X FOR 4 COLUMN ASSEMBLY OPTIONS
SB6.1 FOR WALL MOUNTED ASSEMBLY OPTIONS (SKIP STEPS 4, 5, & 7)

STEP 4: PICK FOUNDATION TYPE (CAISSON WITH EMBEDDED COLUMN, CAISSON WITH BOLTED COLUMN, OR MAT FOOTING) . MARK APPLICABLE SHEET ON SHEET INDEX, SB0.1

STEP 5: MARK APPLICABLE CHECK BOX FOR SCOREBAORD SIZE ON DETAIL 'A' OF SELECTED COLUMN/FOUNDATION OPTION (SHEETS SB1.X, SB2.X, SB3.X OR SB4.X)

STEP 6: FILL IN SITE SPECIFIC SEISMIC AND WIND VALUES TABLE C ON SB0.1.

STEP 7: FILL IN SITE SPECIFIC FLOOD ZONE AS REQUIRED, TABLE D ON SB0.1

STEP 8: VERIFY ALL APPLICABLE SHEETS ARE MARKED ON SHEET INDEX, SB0.1. INCLUDE ONLY MARKED SHEETS AS PART OF DSA SUBMITTAL

SITE SPECIFIC SUBMITTAL REQUIREMENTS

SEE DSA POLICY PL 07-02 FOR ADDITIONAL INSTRUCTIONS REGARDING USE AND APPLICATION OF THIS PRE-CHECK DOCUMENT. ALL SITE SPECIFIC SUBMITTALS SHALL INCLUDE:

1. COMPLETED DSA 1 APPLICATION, DSA3, DSA 103, AND FILING FEE AND COPY OF THE PRE-CHECK DOCUMENT WITH APPLICABLE DESIGN OPTION MARKED ON THE MARQUEE, TWO COLUMN, THREE COLUMN, FOUR COLUMN, OR WALL ASSEMBLY SCHEDULES.
2. SITE PLAN OF FACILITY IDENTIFYING ALL STRUCTURES BY DSA APPLICATION NUMBER. LOCATION OF SCOREBOARD SHALL BE IDENTIFIED. ELECTRICAL PANEL SERVING THE SCOREBOARD SHALL BE LOCATED AND IDENTIFIED.
3. WHERE WIRELESS CONTROLLERS ARE NOT SPECIFIED, AN ACCESSIBLE PATH OF TRAVEL AND ACCESSIBLE SEATING FOR THE SCOREBOARD OPERATOR SHALL BE IDENTIFIED AND PROVIDED.
4. PROVIDE AN ELEVATION OF PROPOSED SCOREBOARD IDENTIFYING ALL INSTALLED DISPLAY COMPONENTS, SIGNAGE, TRUSSES, AND ADDITIONAL COMPONENTS IN THE PRE-CHECK DOCUMENT. ALL ELEMENT WEIGHTS SHALL BE SPECIFIED.
5. THE APPLICABLE SHEETS SHALL BE IDENTIFIED BY MARKING APPROPRIATE CHECK BOX ON THIS SHEET.
6. THE APPLICABLE CONFIGURATION SHALL BE IDENTIFIED BY MARKING APPROPRIATE CHECK BOX ON THE 'A' DETAILS ON THE APPLICABLE SHEET.
7. PROVIDE CUT SHEETS OF THE BOARDS, BOXES, AND EQUIPMENT TO BE MOUNTED ON THE STRUCTURE. CUT SHEETS SHALL INCLUDE WEIGHTS AND DIMENSIONS
8. SITE SPECIFIC SEISMIC DESIGN CRITERIA SHALL BE PROVIDED IN THE DRAWINGS.
9. SITE SPECIFIC BASIC DESIGN WINDSPEED AND SITE EXPOSURE SHALL BE PROVIDED ON THE DRAWINGS, SEE TABLE C.
10. STEEL COATING SPECIFICATIONS FOR WEATHER PROTECTION IF DIFFERENT THAN NOTED ON SB0.2
11. A GEOHAZARD REPORT IS NOT REQUIRED PER IR A-4. IF A SCOREBOARD IS LOCATED IN A FLOOD ZONE OTHER THAN ZONE X, A LETTER STAMPED AND SIGNED BY A GEOTECHNICAL ENGINEER IS REQUIRED VALIDATING THE ALLOWABLE SOIL VALUES, PROVIDE INFORMATION IN TABLE D.
12. PROVIDE A SITE SPECIFIC DESIGN FOR STRUCTURES THAT DO NOT MEET THE MINIMUM SETBACK REQUIREMENTS.
13. PROVIDE A SITE SPECIFIC DESIGN FOR STRUCTURES LOCATED IN AN AREA WITH LIQUEFIABLE SOIL OR SITE CLASS F.
14. FOR WALL MOUNTED ASSEMBLIES (SB6.1), STRUCTURAL ANALYSIS AND JUSTIFICATION THAT THE WALL FRAMING IS CAPABLE OF SUPPORTING THE ASSEMBLY FOR VERTICAL AND LATERAL LOADS.

TABLE A - SCOREBOARD ASSEMBLY WORKSHEET [1]

Nevco Part No.or Description	Part Height [ft.]	Part Width [ft]	Part Weight [lb]
**SOFTBALL SCOREBOARD MODEL 1608	6 ft.	18 ft.	375 lbs.
**BASEBALL SCOREBOARD MODEL 1608	6 ft.	18 ft.	375 lbs.
Total			

TOTAL ASSEMBLY DIMENSIONS & WEIGHT [2]

	**SOTBALL SCOREBOARD	**BASEBALL SCOREBOARD
Total Assembly Height =	6 ft. 0 in.	6 ft. 0 in.
Total Assembly Width =	18 ft. 0 in.	18 ft. 0 in.
Total Assembly Weight =	375 lbs.	375 lbs.

Distance from Finish Grade to Bottom of Sign = 10 ft. 0 in. **BOTH SCOREBOARDS

Total Height = Total Assembly Height + Distance from Finish Grade to Bottom of Sign = 16 ft. 0 in. **BOTH SCOREBOARDS

SCOREBOARD ASSEMBLY FOOTNOTES

1. Verify part number, dimensions, and weight with Nevco
2. See Step 3 of Scoreboard Assembly Worksheet Instructions

CHECK ALL THAT APPLY	SHEET INDEX	
■ (REQ'D)	SB0.1	COVER SHEET
■ (REQ'D)	SB0.2	STRUCTURAL NOTES
☐	SB0.3	EXAMPLE DSA 103 - TESTING AND INSPECTIONS
☐	~~SB1.1~~	~~MARQUEE CAISSON - EMBEDDED~~
☐	~~SB1.2~~	~~MARQUEE CAISSON - BOLTED~~
☐	~~SB1.3~~	~~MARQUEE MAT FOOTING~~
☐	~~SB2.1~~	~~TWO COLUMN CAISSON - EMBEDDED~~
☒	SB2.2	TWO COLUMN CAISSON - BOLTED
☐	~~SB2.3~~	~~TWO COLUMN MAT FOOTING~~
☐	~~SB3.1~~	~~THREE COLUMN CAISSON - EMBEDDED~~
☐	~~SB3.2~~	~~THREE COLUMN CAISSON - BOLTED~~
☐	~~SB3.3~~	~~THREE COLUMN MAT FOOTING~~
☐	~~SB4.1~~	~~FOUR COLUMN CAISSON - EMBEDDED~~
☐	~~SB4.2~~	~~FOUR COLUMN CAISSON - BOLTED~~
☐	~~SB4.3~~	~~FOUR COLUMN MAT FOOTING~~
☒	SB5.1	ATTACHMENT DETAILS
☒	SB5.2	OPTIONAL SCOREBOARD FEATURE ATTACHMENT DETAILS
☐	~~SB5.3~~	~~DECORATIVE ALUMINUM TRUSS ATTACHMENT DETAILS~~
☐	~~SB5.4~~	~~DECORATIVE ALUMINUM TRUSS ATTACHMENT DETAILS & 10mm VIDEO BOARD~~
☐	~~SB6.1~~	~~INDOOR WALL MOUNTED SCOREBOARD~~

CODE INFORMATION

2022 CALIFORNIA BUILDING STANDARDS CODE (TITLE 24, CCR):

2025 ADMINISTRATIVE CODE, PART 1, TITLE 24 CODE OF REGULATIONS (CCR)
2022 CALIFORNIA BUILDING CODE VOLUMES 1 &2, PART 2, TITLE 24 CCR
2022 CALIFORNIA ELECTRICAL CODE, PART 3, TITLE 24 CCR
2022 CALIFORNIA MECHANICAL CODE, PART 4, TITLE 24 CCR
2022 CALIFORNIA PLUMBING CODE, PART 5, TITLE 24 CCR
2022 CALIFORNIA ENERGY CODE, PART 6, TITLE 24 CCR
2022 CALIFORNIA FIRE CODE, PART 9, TITLE 24 CCR
2022 CALIFORNIA GREEN BUILDING STANDARDS CODE, PART 11, TITLE 24 CCR
2022 CALIFORNIA REFERENCED STANDARDS CODE, PART 12, TITLE 24 CCR

REFERENCED CODE SECTIONS FOR APPLICABLE STANDARDS:
2022 CALIFORNIA BUILDING CODE, CHAPTER 35
2022 CALIFORNIA FIRE CODE, CHAPTER 80

GENERAL NOTES AND MATERIAL SPECIFICATIONS

GENERAL REQUIREMENTS

1. THE ARCHITECT OR PROFESSIONAL ENGINEER IN GENERAL RESPONSIBLE CHARGE SHALL SIGN AND SEAL ALL DRAWINGS AND SPECIFICATIONS PER TITLE 24, PART 1, SECTIONS 4-316(E) AND 4-317 (H).
2. CHANGES TO THE APPROVED DRAWINGS AND SPECIFICATIONS SHALL BE MADE BY ADDENDA, OR CONSTRUCTION CHANGE DOCUMENTS APPROVED BY THE DIVISION OF THE STATE ARCHITECT (DSA), AS REQUIRED BY TITLE 24, PART 1, SECTION 4-338.
3. THE DISTRICT SHALL EMPLOY A CLASS 2 PROJECT INSPECTOR WHEN OVERALL STRUCTURE HEIGHT IS 35 FEET OR GREATER, OTHERWISE A CLASS 3 PROJECT INSPECTOR MAY BE USED. THE PROJECT INSPECTOR SHALL PROVIDE CONTINUOUS INSPECTION OF THE WORK , AND SHALL SUBMIT VERIFIED REPORTS ON A DSA-6 FORM. THE DUTIES OF THE PROJECT INSPECTION ARE DEFINED IN TITLE 24, PART 1, SECTION 4-342.
4. ALL SCOREBOARD CONTROLS SHALL BE FULLY ACCESSIBLE VIA WIRELESS CONTROL OR COMPLETE DESIGN SHALL BE DEMONSTRATED IN THE SITE-SPECIFIC APPLICATION.
5. ALL ASSEMBLIES SHALL HAVE ELECTRICAL DISCONNECT PER CEC 600.6 AND BE ELECTRICALLY GROUNDED PER CEC 600.7, SEE DETAIL B/SB5.1
6. IN FLOOD ZONES, LOCATION OF ELECTRICAL ELEMENTS SHALL CONFORM TO ASCE 24, SECTION 7.2 PER DSA PR-14-01 SECTION 1.2.1.
7. SEE PAGE, SB0.2, FOR ALL MATERIAL SPECIFICATIONS AND NOTES.
8. PROJECT DESIGN PROFESSIONAL OF RECORD IS RESPONSIBLE FOR PREPARATION OF THE PROJECT SPECIFIC DSA 103 AND IS RESPONSIBLE FOR ALL SHOP DRAWING AND SUBMITTAL REVIEWS. SEE SB0.3 FOR EXAMPLE DSA 103

IDENTIFICATION STAMP
DIV. OF THE STATE ARCHITECT
APP: 02-123587 INC:
REVIEWED FOR
SS ☑ FLS ☑ ACS ☑
DATE: 01/16/2026

BUEHLER

No. 5405
DATE SIGNED: 04.11.2025
PC SEOR SEAL

THESE DRAWINGS, NOTES AND DETAILS ARE INSTRUMENTS OF SERVICE AND ARE THE PROPERTY OF BUEHLER ENGINEERING INC. ALL DRAWINGS, INFORMATION, SPECIFICATIONS, IDEAS, DESIGNS AND ARRANGEMENTS REPRESENTED WITHIN THESE DOCUMENTS SHALL REMAIN THE PROPERTY OF THE ENGINEER. NO PART THEREOF SHALL BE COPIED, DISCLOSED TO OTHERS OR USED IN CONNECTION WITH ANY WORK OR PROJECT OTHER THAN THE SPECIFIC PROJECT FOR WHICH THEY HAVE BEEN PREPARED AND DEVELOPED WITHOUT THE EXPRESSED WRITTEN CONSENT OF THE ENGINEER. COPYRIGHT 2025.
THANK YOU FOR YOUR INTEREST IN NEVCO SCOREBOARD PRODUCTS

NEVCO
301 East Harris Avenue, Greenville, Illinois 62246
Phone: (618) 664-0360
www.nevco.com

APPROVED
DIV. OF THE STATE ARCHITECT
APP: 04-124534 PC
REVIEWED FOR
SS ☑ FLS ☑ ACS ☑ CG ☐
DATE: 05/14/2025
DSA STAMP

PRE-CHECK (PC) DOCUMENT
CODE: 2022

A separate project application
for construction is required.

LODI HS
BASEBALL & SOFTBALL
SCOREBOARD:
MODEL 1608, 18' WIDE x 6' HIGH,
COLUMNS BOLTED TO PIERS
2022 CBC

COVER
SHEET

SHEET INFORMATION
DATE 04.11.2025
DRAWN JMK
CHECKED MEP
SSG JOB # S23109
SHEET SB0.1

STRUCTURAL NOTES

GENERAL NOTES

1. The following notes, typical details and schedules shall apply to all phases of this project unless otherwise shown or noted.
2. Specific notes and details shall take precedence over general notes and typical details.
3. All materials and workmanship shall conform to the minimum standards of the 2022 edition Title 24 of the California Building Code (CBC) and such other regulating agencies exercising authority over any portion of the work. The contractor shall have a current copy of the CBC on the job site.
4. The "Contract or Construction Documents" shall consist of these notes, details, schedules, plans, and drawings.
5. All specifications, including but not limited to materials and products, shall be those put forth in the "Contract or Construction Documents". No substitutions shall be permitted to be used or assumed to be used in the bidding or construction process without written approval by the Structural Engineer of Record.
6. The contractor shall examine the "Contract or Construction Documents" and shall notify the Architect or Structural Engineer of Record of any discrepancies he may find before proceeding with the work.
7. All information on existing conditions shown on drawings are based on best present knowledge available, but without guarantee of accuracy. The Contractor shall verify and be responsible for all dimensions and conditions at the site and shall notify the Architect or Structural Engineer of Record of any discrepancies between actual site conditions and information shown on or in the "Contract or Construction Documents" before proceeding with work.
8. The Contractor shall immediately notify the Architect or Structural Engineer of Record of any condition which in his opinion might endanger the stability of the structure or cause distress of the structure.
9. All work shall conform to the best practice prevailing in the various trades comprising work. The Contractor shall be responsible for coordinating the work of all trades.
10. These "Contract or Construction Documents" represent the finished structure, and do not indicate the method of construction. The Contractor shall supervise and direct the work and shall be solely responsible for construction means, methods, techniques, sequences and procedures.
11. Inspection and approval for fabricator's shops used for fabrication of structural load bearing members, components, materials or assemblies shall conform to CBC Section 1704A.2.5.
    - A. Labeling (as required or specified) shall be provided in accordance with CBC Section 1703A.5.
    - B. Evaluation and follow-up inspection services (as required or specified), shall conform to CBC Section 1703A.6.
12. The Contractor shall provide temporary bracing and shoring for all structural members as required for structural stability of the structure during all phases of construction.
13. The Contractor shall take all steps necessary to ensure proper alignment of the structure after the installation of all structural and finish materials. This shall include any necessary preloading of the structure to determine final position of the completed work.
14. Observation visits to the project site by field representatives of Architect and/or Structural Engineer of Record (support services) shall not include inspections of safety or protective measures, nor construction procedures, techniques or methods. Any support services performed by Architect or Structural Engineer of Record during any phase of construction, shall be distinguished from continuous and detailed inspection services (as required by any regulating governmental agency, e.g. the Authority Having Jurisdiction) provided by others. these support services, whether of material or work, are performed solely for the purpose of assisting in quality control and in achieving conformance with contract documents, but do not guarantee Contractor's performance and shall not be construed as supervision of construction.
15. These notes, details, drawings and specifications (Contract or Construction Documents) do not carry necessary provisions for construction safety. These documents and all phases of construction hereby contemplated are to be governed, at all times, by applicable provisions of the current California Occupational Safety and Health Act.
16. Where any conflict occurs between the requirements of federal, state and local laws, codes, ordinances, rules and regulations, the most stringent shall govern.
17. Written dimensions shall have precedence over scaled dimensions.
18. Drawings (notes, schedules, details and plans) shall have precedence over Structural Calculations.
19. In the event that certain features of the construction are not fully shown on the drawings or called for in the General Notes or Specifications, then their construction shall be of the same character as for similar conditions that are shown or called for.
20. ASTM designation and all standards refer to the latest amendments.
21. These structural "Contract or Construction Documents" shall not be modified without prior written approval of the Structural Engineer of Record.
22. Only structural working drawings approved by the Division of the State Architectare permitted to be used for construction on this project. All other drawings or documents are obsolete and are not permitted on the job site, nor shall they be used for any construction purposes. Contractors using unapproved drawings or documents are solely responsible for all work not performed in accordance with the "approved" drawings.
23. A Division of the State Architect certified project inspector employed by the District (Owner) and approved by the Division of the State Architect shall provide continuous inspection of the work. The duties of the inspector are defined in Section 4-342, Part 1, Title 24 California Code of Regulations.

FOUNDATION NOTES

1. Basis: See Structural Design Values Chart, Sheet SB0.1 Table B
2. Unexpected soil conditions: Allowable values and foundation design are based upon the minimum values provided in Table 1806A.2 of the 2022 California Building Code. See SB0.1 for values
3. Excavate to required depths and dimensions (as indicated in drawings), cut square and smooth with firm level bottoms. Care shall be taken not to over-excavate foundation at lower elevation and prevent disturbing of soils around higher elevation.
4. Footings shall be poured in neat excavations, without side forms whenever possible.
5. Carry all foundations to required depths into compacted fill or natural soil (as per Structural Plans and Details).
6. All foundation excavations shall be inspected and approved by the Inspector of Record or Geotechnical Engineer prior to forming and placement of reinforcing or concrete.
7. Foundations shall not be poured until all required reinforcing steel, sleeves, inserts, conduits, pipes, etc. and formwork is properly placed and inspected by the Authority having Jurisdiction.
8. The sides and bottoms of excavations which are to have concrete contact must be moistened several times just prior to pouring upon them.
9. De-water footings, as required, to maintain dry working conditions.

REINFORCING STEEL

1. All reinforcing steel shall be deformed intermediate grade bars conforming to ASTM A615, Grade 60 (f_y = 60 ksi) unless noted otherwise.
2. Reinforcing steel shall not be welded, unless specifically noted otherwise.
3. To hold reinforcing bars in their true position and prevent displacement, standard tie and anchorage devices must be provided. Placing of reinforcement shall conform to ACI 318-19 Section 26.6.2.
4. Shop drawings for fabrication of any reinforcing steel shall be approved by Contractor and submitted to Project Specific Architect or Project Specific Structural Engineer of Record, for their review, prior to fabrication.
5. Refer to typical details for minimum splice length and minimum radius of bend of reinforcing steel.
6. All reinforcing steel splices shall be staggered 24", unless specifically noted or detailed otherwise.
7. All reinforcing bar bends shall be made cold.
8. Fabrication, erection and placement of reinforcing steel shall conform to Concrete Reinforcing Steel Institute of Standard Practice.
9. Reinforcing steel shall be clean of rust, grease or other material likely to impair bond.

CONCRETE

1. All concrete shall have a minimum ultimate compressive strength (f'_c) as outlined below at 28 days. All concrete shall be regular weight (unless specifically noted otherwise).
    - A. Concrete for footings: 4,500 psi w/c = 0.45 max.
2. Maximum Fly Ash content shall be 15%, by weight, of total cementitious materials and shall conform to ASTM C618.
3. All concrete work shall comply with CBC Chapter 19A and ACI 318-19 and latest edition of ACI Manual of Concrete Practice.
4. Special Inspection (as required or specified) shall conform to CBC Chapter 17A.
5. Cement shall be portland cement Type V and shall conform to ASTM C150.
6. Aggregates shall conform to ASTM C33, provide aggregates from a single source.
7. Water shall conform to ASTM C94 and be potable.
8. Where not specifically detailed, the minimum concrete cover on reinforcing steel shall be:
    - A. Concrete cast against and permanently exposed to earth or weather: 3"
10. All reinforcing steel, anchor bolts, dowels, inserts and any other hardware to be set in concrete shall be well secured in position prior to pouring of concrete.
11. Vibrate all concrete as it is placed, with a mechanical vibrator operated by experienced personnel. The vibrator shall be used to consolidate the concrete, not transport it. Reinforcing and forms shall not be vibrated.
12. Formwork design and removal shall conform to ACI 318-19 Section 26.11. Remove forms in accordance with the following minimum schedule:
    - A. Side forms of footings: Minimum 48 hours
    - B. Column and pier forms: 72 hours & 70% of design strength
15. Concrete shall not free fall more than six feet. Use tremie, pump or other approved methods.
16. Concrete shall be maintained in a moist condition for a minimum of 5 days after placement.
17. The Contractor may use concrete admixtures as a construction means and methods to execute "Contract or Construction Documents". Use of admixture is solely the responsibility of the Contractor.
18. Mix designs shall be prepared by an approved testing laboratory, signed by a licensed engineer and shall be submitted to the Project Specific Design Professional of Record for approval. Buehler Engineering Inc is not responsible for review or approval of site specific concrete mix design.
19. Only one grade of concrete shall be allowed on project site at any one time
20. Concrete strength shall be verified by standard cylinder tests (in accordance with CBC Section 1905A.1.16) made by an approved testing laboratory.
21. Concrete placed when the air temperature has fallen to, or is expected to fall below 40° shall conform to ACI 318-19 Section 26.5.4, and ACI 306R-16.
22. Concrete placed during hot weather shall conform to ACI 318-19 Section 26.5.5, and ACI 305R-14.
23. Conduits and sleeves placed within structural concrete shall not be tied directly to structural reinforcement.
    - A. 1" concrete cover shall be maintained around all reinforcement.
24. No stakes shall be permitted within the footing section.
25. Concrete shall reach minimum 75% design strength or cure for 3 days minimum prior to installation of steel columns and scoreboard components.

DRILLED CAISSON/PIER AND GRADE BEAM NOTES

1. Excavations for drilled caissons/pier shall be performed in compliance with local grading codes and ordinances as well as CBC Chapters 18A and 33A.
2. Provide Special Inspection in accordance with CBC Section 1705A.8 and Table 1705A.8.
3. Excavations for all drilled caissons/piers shall be approved by the Project Geotechnical Engineer or Project Special Inspector prior to placing of concrete.
4. Reinforcement for drilled caissons/pier shall be approved by the Structural Engineer of Record prior to placing in caisson/pier excavation.
5. De-water caisson/pier footings and building excavation as required to maintain dry working conditions.
6. Caisson/piers are to be poured within 24 hours after completion of drilling operation. Shoring requirements shall be determined by contractor. Contractor shall be provide fall protection and safety barriers at and near the drilled hole as required by OSHA and the Authority Having Jurisdiction.
7. The Contractor shall be responsible for all shoring, bracing, etc. necessary to support cut and/or fill banks, and existing structures during excavation, and the forming and placement of concrete.
8. Bottom of caissons/piers shall be thoroughly cleaned prior to placement of concrete.

STRUCTURAL STEEL AND WELDING

1. All structural steel construction shall conform to AISC 360-16 and AISC 341-16.
    - A. Fabrication of all structural steel shall be done in the shop of an approved fabricator. Inspection and approval for fabricator's shops used for fabrication of structural load bearing members, components, materials or assemblies shall conform to CBC Section 1704A.2.5.
2. All structural steel shall conform to the following specifications:
    - A. Angles, channels, plates, bars, rounds, and other miscellaneous shapes: Shall conform to ASTM A36 and shall have a minimum yield stress (F_y) of 36 ksi.
    - B. Wide-flange shapes: Shall conform to ASTM A992 and shall have a minimum yield stress (F_y) of 50 ksi.
    - C. Structural tubes: Shall be ASTM A500, Grade C, and shall have a min. yield stress (F_y) of 50ksi.
3. All structural steel fasteners shall conform to the following specifications:
    - A. Bolts shall conform to ASTM A307
    - B. Anchor Bolts shall conform to ASTM F1554, Grade as noted in drawings
    - C. Carbon steel nuts shall conform to ASTM A563
    - D. Stainless steel nuts shall conform to ASTM F594
    - E. Washers shall conform to ASTM F436
4. Special Inspection shall be provided for all structural steel and welding, in accordance with CBC Chapter 17A.
5. All structural steel shall be fabricated, erected and welded in accordance with AISC Specifications for Structural Steel Buildings (AISC 360-16) and Code of Standard Practice for Steel Buildings and Bridges (AISC 303-16).
6. All welding shall be done by qualified and certified welders.
7. Shop drawings for the fabrication of any structural steel shall be approved by the Contractor and submitted to Project Specific Architect or Project Specific Structural Engineer of Record for their review, prior to fabrication.
8. No holes other than those specifically detailed shall be allowed through structural steel members. Burning of holes is not permitted.
9. All welding shall conform to 'AWS D1.1' specifications for welding. (E-70XX Electrodes).
10. Where fillet weld size is not indicated, use 'AWS' minimum size based on the thickness of the thinner part being welded, as specified in AISC Specifications for Structural Steel Buildings (AISC 360-10), Section J2.2.
11. All butt welds to be complete joint penetration, unless specifically noted otherwise.
12. Welder qualification requirements, welding procedure and welding electrodes for all structural steel (except structural sheet steel, see steel decking) shall conform to CBC Sections 1705A.2.1 and 2204A.1.
13. Provide 3" minimum concrete cover around all structural steel below grade.
14. Structural steel embedded into concrete shall be uncoated.
15. Structural steel shall be hot-dip galvanized (minimum ASTM A123 or A153 Class D) or painted with zinc-rich primer, undercoat, and finish coat; or equivalent paint system.
16. All exposed steel fasteners, including cast-in-place anchor bolts/rods, shall be stainless steel (Type 304 minimum), hot-dip galvanized (ASTM A153, Class D minimum or ASTM F2329), or protected with corrosion-preventive coating that demonstrated no more than 2% of red rust in minimum 1,000 hours of exposure in salt spray test per ASTM B117. Zinc plated fasteners do not comply with this requirement.

NOTE: FOR TESTING & SPECIAL INSPECTIONS SEE FORM DSA 103 SUBMITTED SEPARATELY

ABBREVIATIONS

A.B.	Anchor Bolt
ABV.	Above
ACI	American Concrete Institute
ADJ.	Adjacent
AHJ	Division of the State Architect
AISC	American Institute of Steel Construction
AOR	Architect of Record
APPROX.	Approximate(ly)
ASCE	American Society of Civil Engineers
ARCH.	Architect, Architecture
ASTM	American Society of Testing and Materials
ATR	All Thread Rod
AWS	American Welding Society
B.O.	Bottom of _______
BOT.	Bottom
b/t	Between
CAC	California Administrative Code
CBC	California Building Code
CIP	Cast-in-place
CJP	Complete Joint Penetration
℄	Centerline
CLR.	Clear
COL.	Column
CONC.	Concrete
CONN.	Connection
CONST.	Construction
CONT.	Continue, Continuous
Ø	Diameter
DBL.	Double
DET.	Detail
DL	Dead Load
DSA	Division of State Architect
DWGS.	Drawings
EA.	Each
E.F.	Each Face
ELEC.	Electric, Electrical
ELEV.	Elevation
EMBED.	Embedded, Embedment
EOR	Engineer of Record
EQ.	Equal
EQUIP.	Equipment
E.S.	Each Side
E.W.	Each Way
EXT.	Exterior
FAB.	Fabricated
FDN.	Foundation
F.G.	Finish Grade
F.O.	Face of _______
FRMG.	Framing
FT.	Foot,Feet
FTG.	Footing
GA.	Gauge
GALV.	Galvanized
GEOR	Geotechnical Engineer of Record
HORIZ.	Horizontal
HSS	Hollow Steel Section
HT.	Height
ICC	International Building Code
ICC	International Code Council
ID	Inside Diameter
IN.	Inch, Inches
INT.	Interior
ksi	Kips per Square Inch
LL	Live Load
MAX.	Maximum
MB	Machine Bolt
MFR.	Manufactured, Manufacturer
MIN.	Minimum
MPH	Miles per Hour
N/R	Not Required
N.T.S.	Not to Scale
o.c.	On Center
o/	Over
OD	Outside Diameter
PEN.	Penetration
PL.	Plate
PJP	Partial Joint Penetration
psi	Pounds per Square Inch
PSF	Pounds per Square Foot
REBAR	Reinforcing Bar
REINF.	Reinforcement
REQ'D	Required
S.F.	Square Feet
SHT.	Sheet
SIM.	Similar
SMS	Sheet Metal Screw
SQ.	Square
STAGG'D	Staggered
STD.	Standard
STL.	Steel
SEOR	Structural Engineer of Record
T&B	Top and bottom
THR'D	Threaded
T.O.	Top of _______
TYP.	Typical
U.N.O.	Unless Noted Otherwise
VERT.	Vertical
VIF	Verify in Field
w/	With
w/c	Water/Cement Ratio
WSS	Welded Steel Stud
WT.	Weight

POST INSTALLED ANCHOR & TESTING

1. All post-installed anchors are to be tension tested with the exception that torque testing is allowed if the anchors are specifically designed as torque controlled
2. Test quantity of post-installed anchors as noted below:

Application	Quantity
Non-structural (Equipment Anchorage, etc.)	50%
Structural	100%

3. Apply proof test loads to anchors without removing the nut if possible. if not, remove nut and install a threaded coupler to the same tightness of the original nut using a torque wrench and apply load.
4. All tests shall be performed in the presence of the inspector.
5. Reaction loads from test fixtures may be applied close to the anchor being tested, provided the anchor is not restrained from withdrawing or restricted from a concrete shear cone type failure mechanism.
6. Test equipment is to be calibrated by an approved testing laboratory in accordance with standard recognized procedures.
7. The following criteria apply for the acceptance of installed anchors:
    - A. Hydraulic ram method: anchors tested with a hydraulic jack or spring loaded devices shall maintain the test load for a minimum of 15 seconds and shall exhibit no discernable movement during the tension test, e.g. as evidenced by loosening of the washer under the nut.
    - B. Torque wrench method: anchors tested with a calibrated torque wrench must attain the manufacturer recommended torque within ½ turn of the nut.
      Exceptions:
        - Wedge or sleeve type: one-quarter turn of the nut from 3/8" sleeve anchor only.
        - Threaded type: one-quarter turn of the screw after initial seating of the screw head.
8. If any anchor fails testing, test all anchors of the same type not previously tested until twenty consecutive anchors pass, then resume the initial test frequency. if the anchors are used for the support and bracing of non-structural components (pipe, duct or conduit), the twenty shall be only those anchors installed by the same trade.
9. Test loads per ICC ESR, IAPMO, OR UES report
10. When installing drilled-in anchors and/or powder driven pins in existing non-prestressed reinforced concrete, use care and caution to avoid cutting or damaging the existing reinforcing bars. When installing them into existing prestressed concrete (pre- or post-tensioned) locate the prestressed tendons by using a non-destructive method prior to installation. Exercise extreme care and caution to avoid cutting or damaging the tendons during installation. Maintain a minimum clearance of one inch between the reinforcement and the drilled-in anchor and/or pin.

ANCHOR TORQUE TEST VALUES

Anchor Diameter	CONCRETE		MASONRY	
	HILTI KB TZ 2	SIMPSON STRONG BOLT 2	HILTI KB TZ 2	SIMPSON STRONG BOLT 2
	ESR-4266	ESR-3037	ESR-4561	ER-240
⅜"	30 ft-lb	30 ft-lb	15 ft-lb	20 ft-lb
½"	50 ft-lb	60 ft-lb	25 ft-lb	35 ft-lb
⅝"	40 ft-lb	90 ft-lb	30 ft-lb	55 ft-lb
¾"	110 ft-lb	150 ft-lb	50 ft-lb	100 ft-lb

If the manufacturer's recommended installation torque is less than the test torque noted in the table, the manufacturer's recommended installation torque should be used in lieu of the tabulated values.

See manufacturer's ESR report for Maximum Impact Wrench Torque Rating.

IDENTIFICATION STAMP
DIV. OF THE STATE ARCHITECT
APP: 02-123587 INC:
REVIEWED FOR
SS ☑ FLS ☑ ACS ☑
DATE: 01/16/2026

BUEHLER

No. 5405
DATE SIGNED: 04.11.2025
PC SEOR SEAL

THESE DRAWINGS, NOTES AND DETAILS ARE INSTRUMENTS OF SERVICE AND ARE THE PROPERTY OF BUEHLER ENGINEERING INC. ALL DRAWINGS, INFORMATION, SPECIFICATIONS, IDEAS, DESIGNS AND ARRANGEMENTS REPRESENTED WITHIN THESE DOCUMENTS SHALL REMAIN THE PROPERTY OF THE ENGINEER. NO PART THEREOF SHALL BE COPIED, DISCLOSED TO OTHERS OR USED IN CONNECTION WITH ANY WORK OR PROJECT OTHER THAN THE SPECIFIC PROJECT FOR WHICH THEY HAVE BEEN PREPARED AND DEVELOPED WITHOUT THE EXPRESSED WRITTEN CONSENT OF THE ENGINEER. COPYRIGHT 2025.
THANK YOU FOR YOUR INTEREST IN NEVCO SCOREBOARD PRODUCTS

nevco
301 East Harris Avenue, Greenville, Illinois 62246
Phone: (618) 664-0360
www.nevco.com

APPROVED
DIV. OF THE STATE ARCHITECT
APP: 04-124534 PC
REVIEWED FOR
SS ☑ FLS ☑ ACS ☑ CG ☐
DATE: 05/14/2025
DSA STAMP

PRE-CHECK (PC) DOCUMENT
CODE: 2022

A separate project application
for construction is required.

LODI HS
BASEBALL & SOFTBALL
SCOREBOARD:
MODEL 1608, 18' WIDE x 6' HIGH,
COLUMNS BOLTED TO PIERS
2022 CBC

STRUCTURAL
NOTES &
SPECIAL
INSPECTIONS

SHEET INFORMATION

DATE	04.11.2025
DRAWN	JMK
CHECKED	MEP
SSG JOB #	S23109
SHEET	SB0.2

EXAMPLE DSA 103 - TESTING AND INSPECTIONS

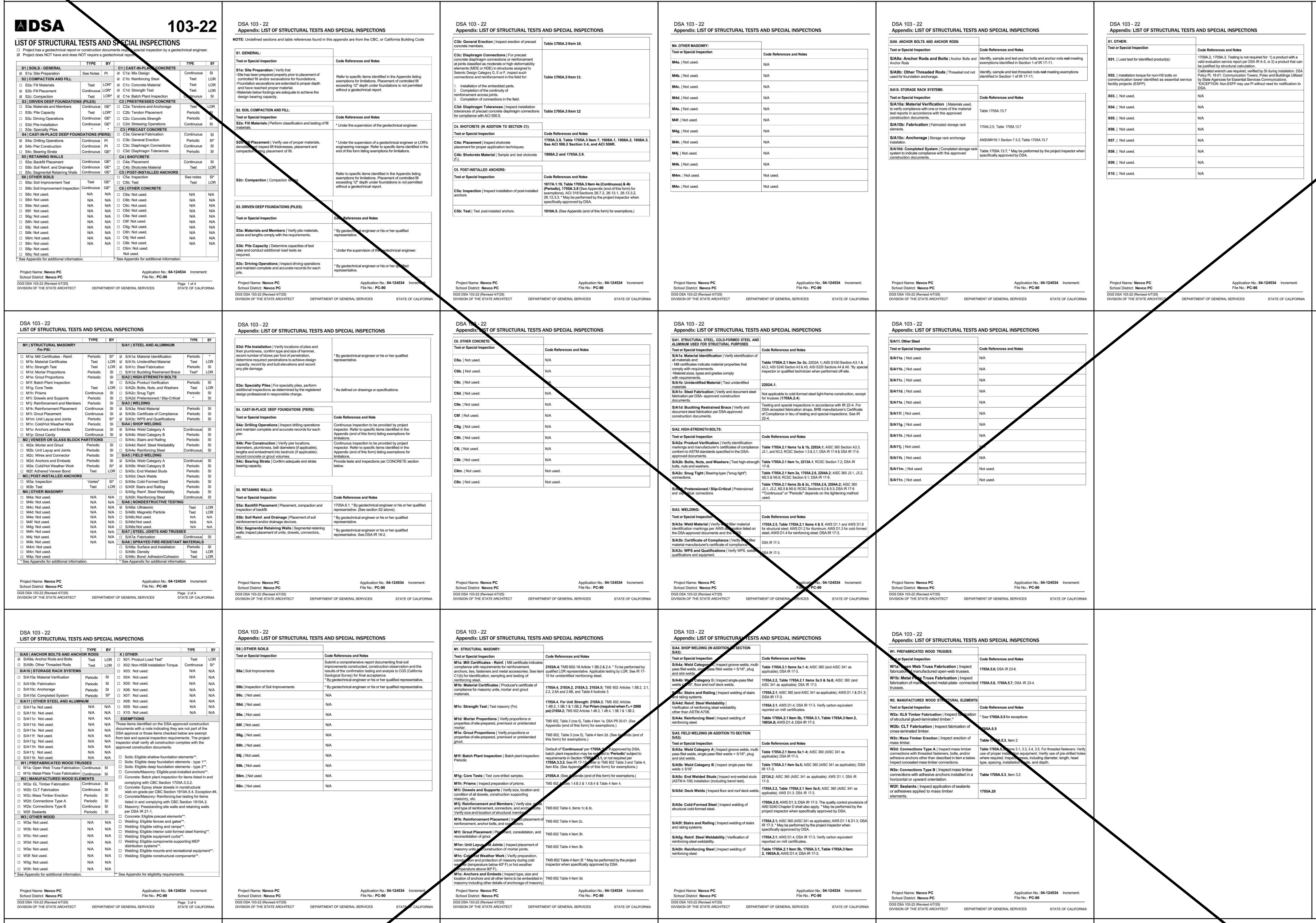

DSA 103-22

LIST OF STRUCTURAL TESTS AND SPECIAL INSPECTIONS

☐ Project has a geotechnical report or construction documents require special inspection by a geotechnical engineer.
☑ Project does NOT have and does NOT require a geotechnical report.

	TYPE	BY		TYPE	BY
S1 | SOILS - GENERAL			**C1 | CAST-IN-PLACE CONCRETE**		
☑ S1a: Site Preparation	See Notes	PI	☑ C1a: Mix Design	Continuous	SI
S2 | COMPACTION AND FILL			☑ C1b: Reinforcing Steel	Test	LOR
☐ S2a: Fill Materials	Test	LOR*	☑ C1c: Concrete Material	Test	LOR
☑ S2b: Fill Placement	Continuous	LOR*	☑ C1d: Strength Test	Test	LOR
☑ S2c: Compaction	Test	LOR*	☑ C1e: Batch Plant Inspection	Continuous	SI
S3 | DRIVEN DEEP FOUNDATIONS (PILES)			**C2 | PRESTRESSED CONCRETE**		
☐ S3a: Materials and Members	Continuous	GE*	☐ C2a: Tendons and Anchorage	Test	LOR
☐ S3b: Pile Capacity	Test	LOR*	☐ C2b: Tendon Placement	Periodic	SI
☐ S3c: Driving Operations	Continuous	GE*	☐ C2c: Concrete Strength	Periodic	SI
☐ S3d: Pile Installation	Continuous	GE*	☐ C2d: Stressing Operations	Continuous	SI
☐ S3e: Specialty Piles	*	*	**C3 | PRECAST CONCRETE**		
S4 | CAST-IN-PLACE DEEP FOUNDATIONS (PIERS)			☐ C3a: General Fabrication	Continuous	SI
☑ S4a: Drilling Operations	Continuous	PI	☐ C3b: General Erection	Periodic	SI*
☑ S4b: Pier Construction	Continuous	PI	☐ C3c: Diaphragm Connections	Continuous	SI
☐ S4c: Bearing Strata	Continuous	GE*	☐ C3d: Diaphragm Tolerances	Periodic	SI
S5 | RETAINING WALLS			**C4 | SHOTCRETE**		
☐ S5a: Backfill Placement	Continuous	GE*	☐ C4a: Placement	Continuous	SI
☐ S5b: Soil Reinf. and Drainage	Continuous	GE*	☐ C4b: Shotcrete Material	Test	LOR
☐ S5c: Segmental Retaining Walls	Continuous	GE*	**C5 | POST-INSTALLED ANCHORS**		
S6 | OTHER SOILS			☐ C5a: Inspection	See notes	SI*
☐ S6a: Soil Improvement Test	Test	GE*	☐ C5b: Test	Test	LOR
☐ S6b: Soil Improvement Inspection	Continuous	GE*	**C6 | OTHER CONCRETE**		
☐ S6c: Not used.	N/A	N/A	☐ C6a: Not used.	N/A	N/A
☐ S6d: Not used.	N/A	N/A	☐ C6b: Not used.	N/A	N/A
☐ S6e: Not used.	N/A	N/A	☐ C6c: Not used.	N/A	N/A
☐ S6f: Not used.	N/A	N/A	☐ C6d: Not used.	N/A	N/A
☐ S6g: Not used.	N/A	N/A	☐ C6e: Not used.	N/A	N/A
☐ S6h: Not used.	N/A	N/A	☐ C6f: Not used.	N/A	N/A
☐ S6j: Not used.	N/A	N/A	☐ C6g: Not used.	N/A	N/A
☐ S6k: Not used.	N/A	N/A	☐ C6h: Not used.	N/A	N/A
☐ S6m: Not used.	N/A	N/A	☐ C6j: Not used.	N/A	N/A
☐ S6n: Not used.	N/A	N/A	☐ C6k: Not used.	N/A	N/A
☐ S6p: Not used.			☐ C6m: Not used.		
☐ S6q: Not used.			Not used.		
* See Appendix for additional information.			* See Appendix for additional information.		

Project Name: **Nevco PC**
School District: **Nevco PC**
Application No.: **04-124534** Increment:
File No.: **PC-90**

DGS DSA 103-22 (Revised 4/7/25)
DIVISION OF THE STATE ARCHITECT DEPARTMENT OF GENERAL SERVICES
Page 1 of 4
STATE OF CALIFORNIA

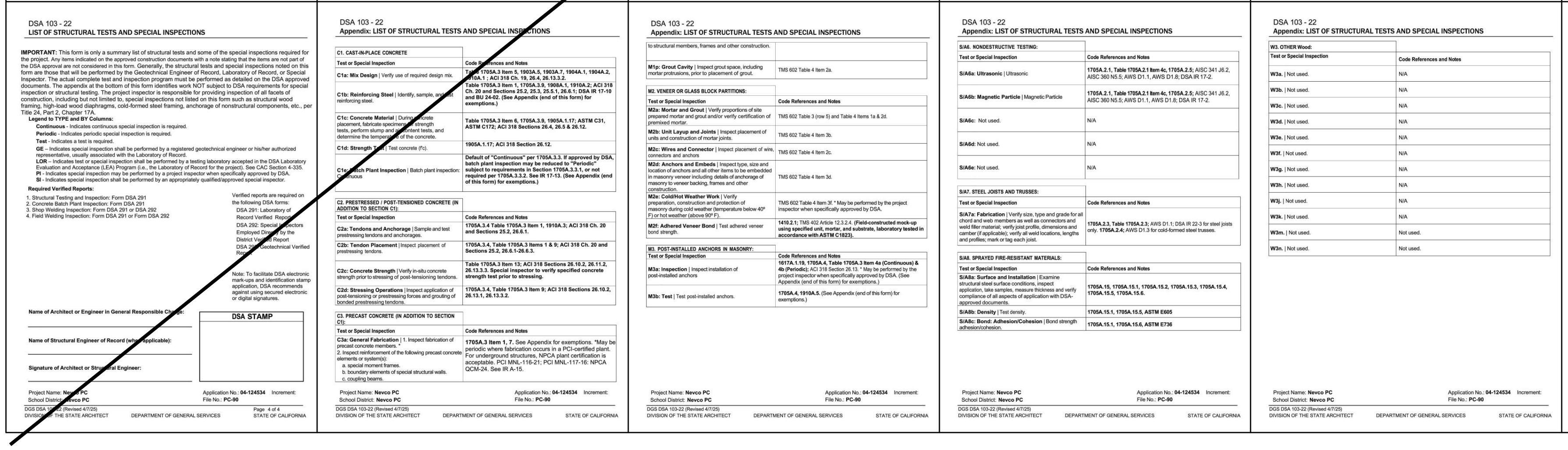

NOTE: FOR TESTING & SPECIAL INSPECTIONS SEE FORM DSA 103 SUBMITTED SEPARATELY

NOTE: THE DSA 103 SHOWN INCLUDES MINIMUM SPECIAL INSPECTION REQUIREMENTS AND IS PROVIDED AS EXAMPLE. ADDITIONAL TESTING AND INSPECTIONS MAY BE REQUIRED BEYOND THE SCOPE OF THE SCOREBOARD. A FINAL DSA 103 FORM SHALL BE SUBMITTED BY THE DESIGN PROFESSIONAL OF RECORD AS PART OF THE SITE SPECIFIC SUBMITTAL REQUIREMENTS. THE DESIGN PROFESSIONAL OF RECORD IS RESPONSIBLE FOR REVIEWING PROJECT SPECIFIC SPECIAL INSPECTION REPORTS. Buehler Engineering Inc STRUCTURAL ENGINEERS OR NEVCO ARE NOT RESPONSIBLE FOR PROVIDING THE PROJECT DSA 103 OR REVIEWING SPECIAL INSPECTION REPORTS.
DSA 103 CAN BE FOUND
AT:https://forms.dgs.ca.gov/SignIn?ReturnUrl=%2FDSA-103-22%2F%3Futm_medium%3Demail%26utm_source%3Dgovdelivery

IDENTIFICATION STAMP
DIV. OF THE STATE ARCHITECT
APP: 02-123587 INC:
REVIEWED FOR
SS ☑ FLS ☑ ACS ☑
DATE: 01/16/2026

BUEHLER

No. 5405
PC SEOR SEAL
DATE SIGNED:
04.11.2025

THESE DRAWINGS, NOTES AND DETAILS ARE INSTRUMENTS OF SERVICE AND ARE THE PROPERTY OF BUEHLER ENGINEERING INC. ALL DRAWINGS, INFORMATION, SPECIFICATIONS, IDEAS, DESIGNS AND ARRANGEMENTS REPRESENTED WITHIN THESE DOCUMENTS SHALL REMAIN THE PROPERTY OF THE ENGINEER. NO PART THEREOF SHALL BE COPIED, DISCLOSED TO OTHERS OR USED IN CONNECTION WITH ANY WORK OR PROJECT OTHER THAN THE SPECIFIC PROJECT FOR WHICH THEY HAVE BEEN PREPARED AND DEVELOPED WITHOUT THE EXPRESSED WRITTEN CONSENT OF THE ENGINEER. COPYRIGHT 2025.
THANK YOU FOR YOUR INTEREST IN NEVCO SCOREBOARD PRODUCTS

nevco
301 East Harris Avenue, Greenville, Illinois 62246
Phone: (618) 664-0360
www.nevco.com

APPROVED
DIV. OF THE STATE ARCHITECT
APP: 04-124534 PC
REVIEWED FOR
SS ☑ FLS ☑ ACS ☑ CG ☐
DATE: 05/14/2025
DSA STAMP

PRE-CHECK (PC) DOCUMENT
CODE: 2022

A separate project application
for construction is required.

LODI HS
BASEBALL & SOFTBALL
SCOREBOARD:
MODEL 1608, 18' WIDE x 6' HIGH,
COLUMNS BOLTED TO PIERS
2022 CBC

EXAMPLE DSA 103 -
TESTING AND INSPECTIONS

SHEET INFORMATION
DATE: 04.11.2025
DRAWN: JMK
CHECKED: MEP
SSG JOB #: S23109
SHEET: SB0.3

**BASEBALL & SOFTBALL SCOREBOARDS:
MODEL 1608

TWO COLUMN ASSEMBLY

ASSEMBLY CRITERIA							PIER FOOTING CRITERIA (2)				BASE PLATE				ANCHOR RODS (3)				
ASSEMBLY WIDTH, W	CHECK OPTION THIS APPLICATION	MAX. WEIGHT	ASSEMBLY HEIGHT, H	COLUMN SPACING, S	COLUMN SIZE	COLUMN SIZE, W/O FLAG	PIER DIAMETER, d	DEPTH, D	LONG. REINF.	TRANS. REINF. (1)	THICKNESS, t	WIDTH, B	LENGTH, L	WELD	QUANTITY & DIAMETER	GRADE	EDGE DISTANCE, X	GROUT HEIGHT	EMBED
8'-0"		770 lbs.	≤ 8'-0"	6'-0"	W8x24	W8x24	36"Ø	7'-0"	8 - #6	#4 @ 4½" o.c.	1"	20"	20"	5/16	(4) - 1⅛"Ø	F1554 - GR.36	2¼"	2"	48"
		1,160 lbs.	≤ 12'-0"	6'-0"	W10x33	W10x33	36"Ø	8'-0"	8 - #6	#4 @ 4½" o.c.	1⅛"	20"	20"	5/16	(4) - 1⅛"Ø	F1554 - GR.36	2¼"	2"	48"
		1,540 lbs.	≤ 16'-0"	6'-0"	W12x40	W12x40	36"Ø	9'-0"	8 - #6	#4 @ 4½" o.c.	1⅛"	20"	20"	5/16	(4) - 1⅛"Ø	F1554 - GR.55	2¼"	2"	48"
		1,920 lbs.	≤ 20'-0"	6'-0"	W14x61	W14x61	42"Ø	9'-9"	8- #8	#4 @ 6" o.c.	1¼"	24"	24"	3/8	(4) - 1¼"Ø	F1554 - GR.55	2½"	2"	64"
9'-0"		870 lbs.	≤ 8'-0"	8'-0"	W8x24	W8x24	36"Ø	7'-3"	8 - #6	#4 @ 4½" o.c.	1"	20"	20"	5/16	(4) - 1⅛"Ø	F1554 - GR.36	2¼"	2"	48"
		1,300 lbs.	≤ 12'-0"	8'-0"	W10x33	W10x33	36"Ø	8'-3"	8 - #6	#4 @ 4½" o.c.	1⅛"	20"	20"	5/16	(4) - 1⅛"Ø	F1554 - GR.36	2¼"	2"	48"
		1,730 lbs.	≤ 16'-0"	8'-0"	W12x45	W12x40	36"Ø	9'-3"	8 - #6	#4 @ 4½" o.c.	1⅛"	20"	20"	5/16	(4) - 1⅛"Ø	F1554 - GR.55	2¼"	2"	48"
		2,160 lbs.	≤ 20'-0"	8'-0"	W14x61	W14x61	42"Ø	10'-0"	8- #8	#4 @ 6" o.c.	1¼"	24"	24"	3/8	(4) - 1¼"Ø	F1554 - GR.55	2½"	2"	64"
10'-0"		960 lbs.	≤ 8'-0"	8'-0"	W8x24	W8x24	36"Ø	7'-6"	8 - #6	#4 @ 4½" o.c.	1"	20"	20"	5/16	(4) - 1⅛"Ø	F1554 - GR.36	2¼"	2"	48"
		1,440 lbs.	≤ 12'-0"	8'-0"	W10x33	W10x33	36"Ø	8'-6"	8 - #6	#4 @ 4½" o.c.	1⅛"	20"	20"	5/16	(4) - 1⅛"Ø	F1554 - GR.36	2¼"	2"	48"
		1,920 lbs.	≤ 16'-0"	8'-0"	W14x48	W14x48	42"Ø	9'-9"	8 - #6	#4 @ 4½" o.c.	1⅛"	24"	24"	5/16	(4) - 1¼"Ø	F1554 - GR.105	2½"	2"	48"
		2,400 lbs.	≤ 20'-0"	8'-0"	W14x61	W14x61	48"Ø	9'-9"	8 - #8	#4 @ 6" o.c.	1¼"	24"	24"	3/8	(4) - 1¼"Ø	F1554 - GR.105	2½"	2"	64"
12'-0"		1,160 lbs.	≤ 8'-0"	8'-0"	W10x33	W10x30	36"Ø	8'-0"	8 - #6	#4 @ 4½" o.c.	1"	20"	20"	5/16	(4) - 1⅛"Ø	F1554 - GR.36	2¼"	2"	48"
		1,730 lbs.	≤ 12'-0"	8'-0"	W14x43	W14x43	42"Ø	9'-3"	8 - #6	#4 @ 4½" o.c.	1⅛"	24"	24"	5/16	(4) - 1¼"Ø	F1554 - GR.55	2½"	2"	48"
		2,310 lbs.	≤ 16'-0"	8'-0"	W14x61	W14x53	42"Ø	10'-3"	8 - #8	#4 @ 4½" o.c.	1⅛"	24"	24"	3/8	(6) - 1¼"Ø	F1554 - GR.55	2½"	2"	64"
		2,880 lbs.	≤ 20'-0"	8'-0"	W14x61	W14x61	48"Ø	10'-3"	8- #8	#4 @ 6" o.c.	1⅜"	24"	24"	7/16	(6) - 1¼"Ø	F1554 - GR.55	2½"	2"	64"
16'-0"		1,540 lbs.	≤ 8'-0"	8'-0"	W10x33	W10x33	36"Ø	8'-9"	8 - #6	#4 @ 4½" o.c.	1⅛"	20"	20"	5/16	(4) - 1⅛"Ø	F1554 - GR.55	2¼"	2"	48"
		2,310 lbs.	≤ 12'-0"	8'-0"	W12x45	W12x40	36"Ø	10'-3"	8 - #6	#4 @ 4½" o.c.	1¼"	24"	24"	3/8	(6) - 1¼"Ø	F1554 - GR.55	2½"	2"	48"
		3,080 lbs.	≤ 16'-0"	8'-0"	W14x61	W14x61	48"Ø	12'-0"	8 - #8	#4 @ 6" o.c.	1⅜"	24"	24"	7/16	(6) - 1¼"Ø	F1554 - GR.55	2½"	2"	64"
		3,840 lbs.	≤ 20'-0"	8'-0"	W16x77	W16x67	48"Ø	12'-0"	12- #8	#4 @ 6" o.c.	1¾"	24"	30"	1/2	(6) - 1¼"Ø	F1554 - GR.105	2½"	2"	64"
18'-0"		1,730 lbs.	≤ 8'-0"	10'-0"	W12x35	W12x35	36"Ø	9'-0"	8 - #6	#4 @ 4½" o.c.	1⅛"	20"	20"	3/8	(4) - 1⅛"Ø	F1554 - GR.36	2¼"	2"	48"
		2,600 lbs.	≤ 12'-0"	10'-0"	W14x48	W14x43	42"Ø	10'-0"	8 - #8	#4 @ 6" o.c.	1¼"	24"	24"	3/8	(4) - 1¼"Ø	F1554 - GR.55	2½"	2"	64"
		3,460 lbs.	≤ 16'-0"	10'-0"	W14x61	W14x61	48"Ø	10'-9"	8 - #8	#4 @ 6" o.c.	1¼"	24"	24"	7/16	(6) - 1¼"Ø	F1554 - GR.55	2½"	2"	64"
		4,320 lbs.	≤ 20'-0"	10'-0"	W16x77	W16x77	48"Ø	13'-0"	12- #8	#4 @ 6" o.c.	1¾"	24"	30"	9/16	(6) - 1½"Ø	F1554 - GR.55	3"	2"	64"
24'-0"		2,310 lbs.	≤ 8'-0"	14'-0"	W14x43	W14x43	36"Ø	9'-9"	8 - #6	#4 @ 4½" o.c.	1⅛"	24"	24"	3/8	(4) - 1¼"Ø	F1554 - GR.55	2½"	2"	48"
		3,460 lbs.	≤ 12'-0"	14'-0"	W14x61	W14x61	36"Ø	11'-6"	8 - #8	#4 @ 6" o.c.	1⅜"	24"	24"	3/8	(6) - 1¼"Ø	F1554 - GR.55	2½"	2"	64"
		4,610 lbs.	≤ 16'-0"	14'-0"	W16x67	W16x67	48"Ø	11'-9"	12 - #8	#4 @ 6" o.c.	1¾"	24"	30"	7/16	(4) - 1½"Ø	F1554 - GR.55	3"	2"	64"
		5,760 lbs.	≤ 20'-0"	14'-0"	W18x86	W18x86	48"Ø	13'-3"	12 - #8	#4 @ 6" o.c.	1¾"	24"	30"	9/16	(6) - 1½"Ø	F1554 - GR.55	3"	2"	64"
		6,920 lbs.	≤ 24'-0"	14'-0"	W18x130	W18x119	48"Ø	14'-6"	12 - #8	#4 @ 6" o.c.	2"	24"	30"	CJP	(6) - 1½"Ø	F1554 - GR.105	3"	2"	64"
		8,070 lbs.	≤ 28'-0"	14'-0"	W18x158	W18x143	54"Ø	16'-0"	12 - #8	#4 @ 6" o.c.	2½"	24"	36"	CJP	(6) - 2"Ø	F1554 - GR.105	4"	2"	64"
28'-0"		2,690 lbs.	≤ 8'-0"	14'-0"	W14x43	W14x43	42"Ø	10'-0"	8 - #7	#4 @ 4½" o.c.	1¼"	24"	24"	3/8	(4) - 1¼"Ø	F1554 - GR.55	2½"	2"	64"
		4,040 lbs.	≤ 12'-0"	14'-0"	W14x61	W14x61	48"Ø	11'-3"	8 - #8	#4 @ 6" o.c.	1¾"	24"	30"	3/8	(4) - 1½"Ø	F1554 - GR.55	3"	2"	64"
		5,380 lbs.	≤ 16'-0"	14'-0"	W16x77	W16x67	48"Ø	12'-9"	12 - #8	#4 @ 6" o.c.	2"	24"	30"	1/2	(6) - 1½"Ø	F1554 - GR.55	3"	2"	64"
		6,720 lbs.	≤ 20'-0"	14'-0"	W18x97	W18x97	48"Ø	14'-3"	12 - #8	#4 @ 6" o.c.	2"	24"	30"	CJP	(6) - 1½"Ø	F1554 - GR.105	3"	2"	64"
		8,070 lbs.	≤ 24'-0"	14'-0"	W18x143	W18x143	54"Ø	15'-9"	12 - #8	#4 @ 6" o.c.	2½"	24"	36"	CJP	(6) - 2"Ø	F1554 - GR.105	4"	2½"	64"
		9,410 lbs.	≤ 28'-0"	14'-0"	W18x175	W18x175	54"Ø	16'-6"	14 - #8	#4 @ 6"o.c.	3"	24"	36"	CJP	(6) - 2"Ø	F1554 -GR.105	4"	2½"	64"

NOTES: (#)
1. CONTRACTOR OPTION TO PROVIDE TIES OR SPIRAL REINFORCING. SEE C/SB2.2 FOR TIE OPTION, SEE D/SB2.2 FOR SPIRAL OPTION
2. CONTRACTOR IS RESPONSIBLE FOR CASING PIERS AND DRILLING SEQUENCING TO PROTECT PIER EXCAVATION
3. F1554 FULLY THREADED ROD IS AN ACCEPTABLE ALTERNATE TO ANCHOR RODS

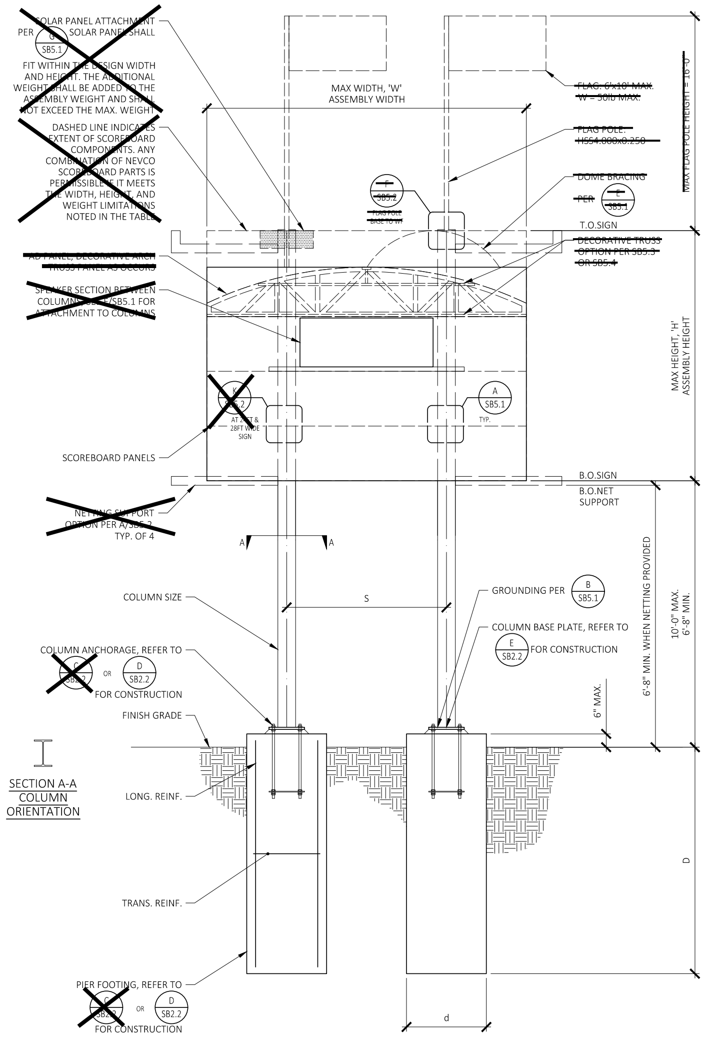
SOLAR PANEL ATTACHMENT PER G/SB5.1 SOLAR PANEL SHALL FIT WITHIN THE DESIGN WIDTH AND HEIGHT. THE ADDITIONAL WEIGHT SHALL BE ADDED TO THE ASSEMBLY WEIGHT AND SHALL NOT EXCEED THE MAX. WEIGHT
DASHED LINE INDICATES EXTENT OF SCOREBOARD COMPONENTS. ANY COMBINATION OF NEVCO SCOREBOARD PARTS IS PERMISSIBLE IF IT MEETS THE WIDTH, HEIGHT, AND WEIGHT LIMITATIONS NOTED IN THE TABLE
~~AD PANEL, DECORATIVE ARCH TRUSS PANEL AS OCCURS~~
SPEAKER SECTION BETWEEN COLUMNS SEE E/SB5.1 FOR ATTACHMENT TO COLUMNS
K SB5.2 AT 24FT & 28FT WIDE SIGN
SCOREBOARD PANELS
NETTING SUPPORT OPTION PER A/SB5.2 TYP. OF 4
MAX WIDTH, 'W' ASSEMBLY WIDTH
~~F SB5.2~~
~~FLAG POLE BASE TO WF~~
~~FLAG: 6'x10' MAX.~~
~~W = 50lb MAX.~~
~~FLAG POLE: HSS4.000x0.250~~
~~DOME BRACING PER E SB5.1~~
~~MAX FLAG POLE HEIGHT = 16'-0"~~
T.O.SIGN
~~DECORATIVE TRUSS OPTION PER SB5.3 OR SB5.4~~
A SB5.1 TYP.
MAX HEIGHT, 'H' ASSEMBLY HEIGHT
B.O.SIGN
B.O.NET SUPPORT
A A
COLUMN SIZE
S
GROUNDING PER B SB5.1
COLUMN BASE PLATE, REFER TO E SB2.2 FOR CONSTRUCTION
6'-8" MIN. WHEN NETTING PROVIDED
10'-0" MAX. 6'-8" MIN.
6" MAX.
COLUMN ANCHORAGE, REFER TO C SB2.2 OR D SB2.2 FOR CONSTRUCTION
FINISH GRADE
SECTION A-A COLUMN ORIENTATION
LONG. REINF.
TRANS. REINF.
D
PIER FOOTING, REFER TO C SB2.2 OR D SB2.2 FOR CONSTRUCTION
d

ELEVATION

TWO COLUMN SCOREBOARD INSTALLATION

N.T.S.

A

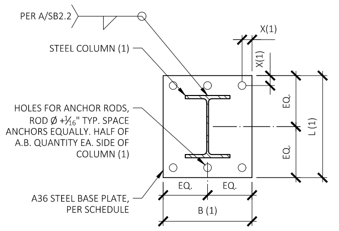
PER A/SB2.2
STEEL COLUMN (1)
HOLES FOR ANCHOR RODS, ROD Ø +1/16" TYP. SPACE ANCHORS EQUALLY. HALF OF A.B. QUANTITY EA. SIDE OF COLUMN (1)
A36 STEEL BASE PLATE, PER SCHEDULE
X(1)
X(1)
EQ.
EQ.
L (1)
EQ.
EQ.
B (1)

NOTES: (#)
1. SEE SCOREBOARD ELEVATION, A/SB2.2

BASE PLATE

N.T.S.

E

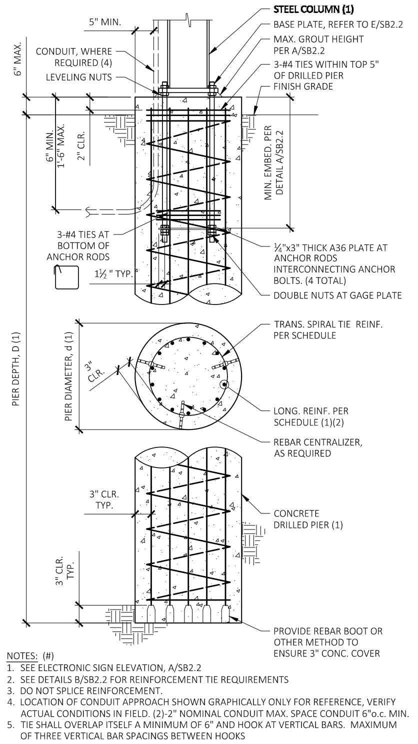
STEEL COLUMN (1)
BASE PLATE, REFER TO E/SB2.2
MAX. GROUT HEIGHT PER A/SB2.2
3-#4 TIES WITHIN TOP 5" OF DRILLED PIER
FINISH GRADE
5" MIN.
6" MAX.
CONDUIT, WHERE REQUIRED (4)
LEVELING NUTS
6" MIN. 1'-6" MAX.
2" CLR.
MIN. EMBED. PER DETAIL A/SB2.2
3-#4 TIES AT BOTTOM OF ANCHOR RODS
1½ " TYP.
¼"x3" THICK A36 PLATE AT ANCHOR RODS INTERCONNECTING ANCHOR BOLTS. (4 TOTAL)
DOUBLE NUTS AT GAGE PLATE
TRANS. SPIRAL TIE REINF. PER SCHEDULE
PIER DEPTH, D (1)
PIER DIAMETER, d (1)
3" CLR.
LONG. REINF. PER SCHEDULE (1)(2)
REBAR CENTRALIZER, AS REQUIRED
3" CLR. TYP.
CONCRETE DRILLED PIER (1)
3" CLR. TYP.
PROVIDE REBAR BOOT OR OTHER METHOD TO ENSURE 3" CONC. COVER

NOTES: (#)
1. SEE ELECTRONIC SIGN ELEVATION, A/SB2.2
2. SEE DETAILS B/SB2.2 FOR REINFORCEMENT TIE REQUIREMENTS
3. DO NOT SPLICE REINFORCEMENT.
4. LOCATION OF CONDUIT APPROACH SHOWN GRAPHICALLY ONLY FOR REFERENCE, VERIFY ACTUAL CONDITIONS IN FIELD. (2)-2" NOMINAL CONDUIT MAX. SPACE CONDUIT 6"o.c. MIN.
5. TIE SHALL OVERLAP ITSELF A MINIMUM OF 6" AND HOOK AT VERTICAL BARS. MAXIMUM OF THREE VERTICAL BAR SPACINGS BETWEEN HOOKS

CONCRETE DRILLED PIER

N.T.S.

D

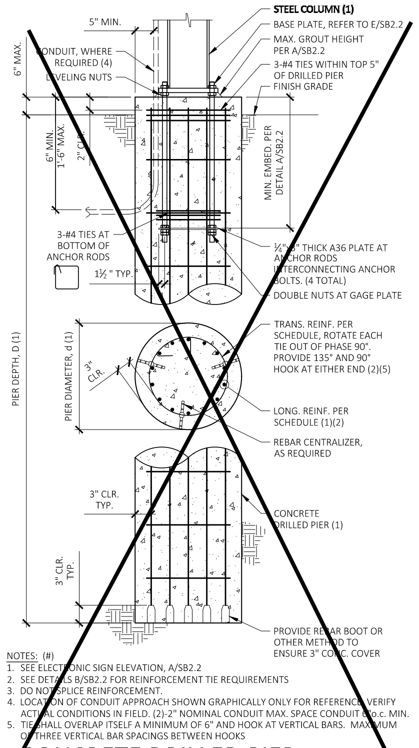
STEEL COLUMN (1)
BASE PLATE, REFER TO E/SB2.2
MAX. GROUT HEIGHT PER A/SB2.2
3-#4 TIES WITHIN TOP 5" OF DRILLED PIER
FINISH GRADE
5" MIN.
6" MAX.
CONDUIT, WHERE REQUIRED (4)
LEVELING NUTS
6" MIN. 1'-6" MAX.
2" CLR.
MIN. EMBED. PER DETAIL A/SB2.2
3-#4 TIES AT BOTTOM OF ANCHOR RODS
1½ " TYP.
¼"x3" THICK A36 PLATE AT ANCHOR RODS INTERCONNECTING ANCHOR BOLTS. (4 TOTAL)
DOUBLE NUTS AT GAGE PLATE
TRANS. REINF. PER SCHEDULE, ROTATE EACH TIE OUT OF PHASE 90°. PROVIDE 135° AND 90° HOOK AT EITHER END (2)(5)
PIER DEPTH, D (1)
PIER DIAMETER, d (1)
3" CLR.
LONG. REINF. PER SCHEDULE (1)(2)
REBAR CENTRALIZER, AS REQUIRED
3" CLR. TYP.
CONCRETE DRILLED PIER (1)
3" CLR. TYP.
PROVIDE REBAR BOOT OR OTHER METHOD TO ENSURE 3" CONC. COVER

NOTES: (#)
1. SEE ELECTRONIC SIGN ELEVATION, A/SB2.2
2. SEE DETAILS B/SB2.2 FOR REINFORCEMENT TIE REQUIREMENTS
3. DO NOT SPLICE REINFORCEMENT.
4. LOCATION OF CONDUIT APPROACH SHOWN GRAPHICALLY ONLY FOR REFERENCE, VERIFY ACTUAL CONDITIONS IN FIELD. (2)-2" NOMINAL CONDUIT MAX. SPACE CONDUIT 6"o.c. MIN.
5. TIE SHALL OVERLAP ITSELF A MINIMUM OF 6" AND HOOK AT VERTICAL BARS. MAXIMUM OF THREE VERTICAL BAR SPACINGS BETWEEN HOOKS

CONCRETE DRILLED PIER

N.T.S.

C

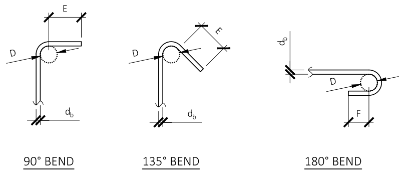
E
D
d_b
E
D
d_b
d_b
D
F

90° BEND

135° BEND

180° BEND

Bar Size	Dimension of Standard Bends		
	D	E	F ($6d_b$) [3" min.]
#4	2"Ø	3"	3"

TIE AND STIRRUP BENDS

N.T.S.

B

IDENTIFICATION STAMP
DIV. OF THE STATE ARCHITECT
APP: 02-123587 INC:
REVIEWED FOR
SS ☑ FLS ☑ ACS ☑
DATE: 01/16/2026

BUEHLER

REGISTERED PROFESSIONAL ENGINEER
MICHAEL E. PAROLINI
No. 5405
STRUCTURAL
STATE OF CALIFORNIA
PC SEOR SEAL
DATE SIGNED:
04.11.2025

THESE DRAWINGS, NOTES AND DETAILS ARE INSTRUMENTS OF SERVICE AND ARE THE PROPERTY OF BUEHLER ENGINEERING INC. ALL DRAWINGS, INFORMATION, SPECIFICATIONS, IDEAS, DESIGNS AND ARRANGEMENTS REPRESENTED WITHIN THESE DOCUMENTS SHALL REMAIN THE PROPERTY OF THE ENGINEER. NO PART THEREOF SHALL BE COPIED, DISCLOSED TO OTHERS OR USED IN CONNECTION WITH ANY WORK OR PROJECT OTHER THAN THE SPECIFIC PROJECT FOR WHICH THEY HAVE BEEN PREPARED AND DEVELOPED WITHOUT THE EXPRESSED WRITTEN CONSENT OF THE ENGINEER. COPYRIGHT 2025.
THANK YOU FOR YOUR INTEREST IN NEVCO SCOREBOARD PRODUCTS

NEVCO
301 East Harris Avenue, Greenville, Illinois 62246
Phone: (618) 664-0360
www.nevco.com

APPROVED
DIV. OF THE STATE ARCHITECT
APP: 04-124534 -PC
REVIEWED FOR
SS ☑ FLS ☑ ACS ☑ CG ☐
DATE: 05/14/2025
DSA STAMP

PRE-CHECK (PC) DOCUMENT
CODE: 2022

A separate project application
for construction is required.

**LODI HS
BASEBALL & SOFTBALL
SCOREBOARD:
MODEL 1608, 18' WIDE x 6' HIGH,
COLUMNS BOLTED TO PIERS
2022 CBC**

TWO COLUMN
CAISSON -
BOLTED

SHEET INFORMATION

DATE
04.11.2025
DRAWN
JMK
CHECKED
MEP
SSG JOB #
S23109
SHEET
SB2.2

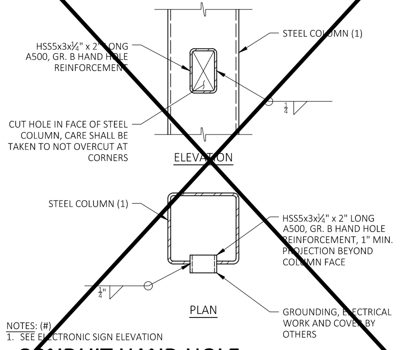
HSS5x3x¼" x 2" LONG A500, GR. B HAND HOLE REINFORCEMENT
STEEL COLUMN (1)
CUT HOLE IN FACE OF STEEL COLUMN, CARE SHALL BE TAKEN TO NOT OVERCUT AT CORNERS
¼
ELEVATION
STEEL COLUMN (1)
HSS5x3x¼" x 2" LONG A500, GR. B HAND HOLE REINFORCEMENT, 1" MIN. PROJECTION BEYOND COLUMN FACE
¼"
PLAN
GROUNDING, ELECTRICAL WORK AND COVER BY OTHERS

NOTES: (#)
1. SEE ELECTRONIC SIGN ELEVATION

CONDUIT HAND HOLE

N.T.S.

H

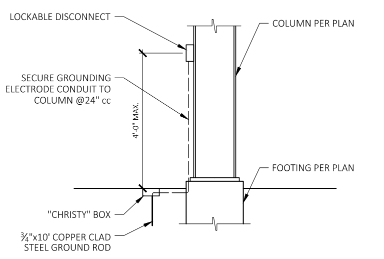
LOCKABLE DISCONNECT
COLUMN PER PLAN
SECURE GROUNDING ELECTRODE CONDUIT TO COLUMN @24" cc
4'-0" MAX.
FOOTING PER PLAN
"CHRISTY" BOX
¾"x10' COPPER CLAD STEEL GROUND ROD

ALL DISPLAYS MUST BE GROUNDED WITH NO MORE THAN 10 OHMS GROUND RESISTANCE

NOTES:
1. ALTERNATE: IT IS PERMISSIBLE TO UTILIZE THE UFER GROUNDING METHOD. DETAILS FOR UFER GROUNDING SHALL BE INCLUDED AS PART OF THE SITE SPECIFIC SUBMITTAL.

GROUNDING DETAIL

N.T.S.

B

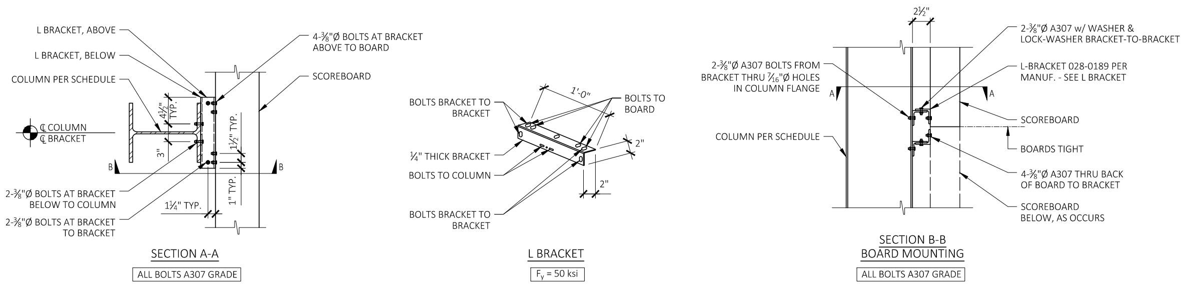
L BRACKET, ABOVE
L BRACKET, BELOW
COLUMN PER SCHEDULE
℄ COLUMN
℄ BRACKET
4½" TYP.
3"
B
B
1½" TYP.
1" TYP.
1¼" TYP.
2-⅜"Ø BOLTS AT BRACKET BELOW TO COLUMN
2-⅜"Ø BOLTS AT BRACKET TO BRACKET
4-⅜"Ø BOLTS AT BRACKET ABOVE TO BOARD
SCOREBOARD
SECTION A-A
ALL BOLTS A307 GRADE
BOLTS BRACKET TO BRACKET
¼" THICK BRACKET
BOLTS TO COLUMN
BOLTS BRACKET TO BRACKET
1'-0"
BOLTS TO BOARD
2"
2"
L BRACKET
F_y = 50 ksi
2½"
2-⅜"Ø A307 BOLTS FROM BRACKET THRU 7/16"Ø HOLES IN COLUMN FLANGE
A
A
COLUMN PER SCHEDULE
2-⅜"Ø A307 w/ WASHER & LOCK-WASHER BRACKET-TO-BRACKET
L-BRACKET 028-0189 PER MANUF. - SEE L BRACKET
SCOREBOARD
BOARDS TIGHT
4-⅜"Ø A307 THRU BACK OF BOARD TO BRACKET
SCOREBOARD BELOW, AS OCCURS
SECTION B-B
BOARD MOUNTING
ALL BOLTS A307 GRADE

SCOREBOARD PART ATTACHMENTS

N.T.S.

A

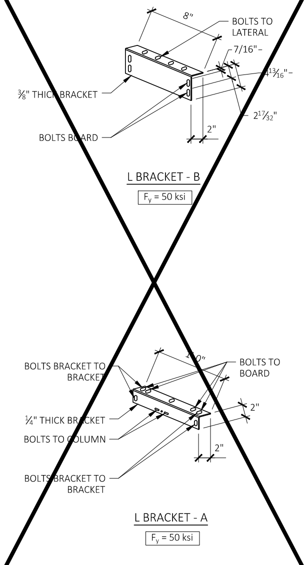
8"
BOLTS TO LATERAL
7/16"
4 13/16"
2 17/32"
⅜" THICK BRACKET
BOLTS BOARD
2"
L BRACKET - B
F_y = 50 ksi
BOLTS BRACKET TO BRACKET
1'-0"
BOLTS TO BOARD
¼" THICK BRACKET
BOLTS TO COLUMN
BOLTS BRACKET TO BRACKET
2"
2"
L BRACKET - A
F_y = 50 ksi

L BRACKETS

N.T.S.

K

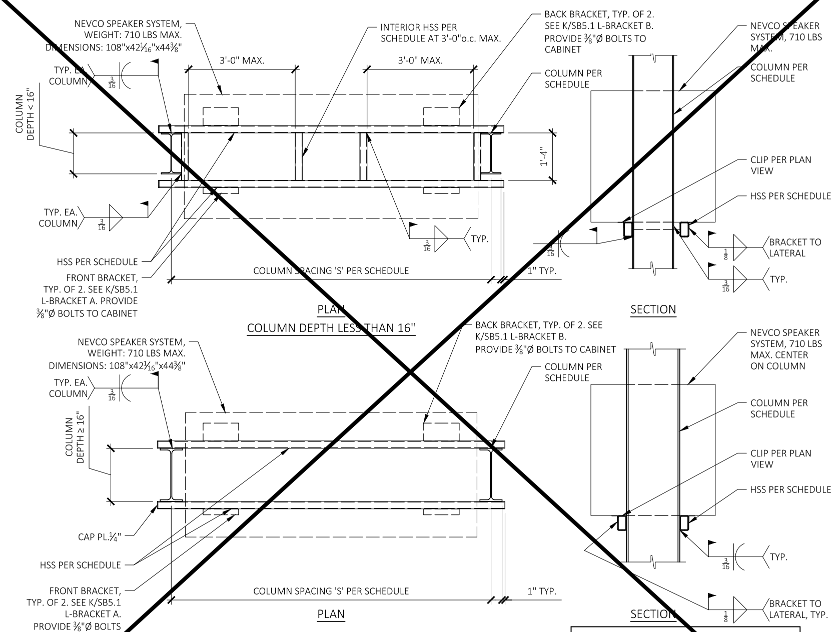
NEVCO SPEAKER SYSTEM, WEIGHT: 710 LBS MAX. DIMENSIONS: 108"x42 1/16"x44⅜"
INTERIOR HSS PER SCHEDULE AT 3'-0"o.c. MAX.
BACK BRACKET, TYP. OF 2. SEE K/SB5.1 L-BRACKET B. PROVIDE ⅜"Ø BOLTS TO CABINET
COLUMN PER SCHEDULE
3'-0" MAX.
3'-0" MAX.
TYP. EA. COLUMN
3/16
COLUMN DEPTH < 16"
1'-4"
TYP. EA. COLUMN
3/16
TYP.
HSS PER SCHEDULE
FRONT BRACKET, TYP. OF 2. SEE K/SB5.1 L-BRACKET A. PROVIDE ⅜"Ø BOLTS TO CABINET
COLUMN SPACING 'S' PER SCHEDULE
1" TYP.
PLAN
COLUMN DEPTH LESS THAN 16"
NEVCO SPEAKER SYSTEM, 710 LBS MAX.
COLUMN PER SCHEDULE
CLIP PER PLAN VIEW
HSS PER SCHEDULE
BRACKET TO LATERAL
TYP.
1/8
3/16
SECTION
NEVCO SPEAKER SYSTEM, WEIGHT: 710 LBS MAX. DIMENSIONS: 108"x42 1/16"x44⅜"
TYP. EA. COLUMN
3/16
COLUMN DEPTH ≥ 16"
BACK BRACKET, TYP. OF 2. SEE K/SB5.1 L-BRACKET B. PROVIDE ⅜"Ø BOLTS TO CABINET
COLUMN PER SCHEDULE
CAP PL.¼"
HSS PER SCHEDULE
FRONT BRACKET, TYP. OF 2. SEE K/SB5.1 L-BRACKET A. PROVIDE ⅜"Ø BOLTS TO CABINET
COLUMN SPACING 'S' PER SCHEDULE
1" TYP.
PLAN
NEVCO SPEAKER SYSTEM, 710 LBS MAX. CENTER ON COLUMN
COLUMN PER SCHEDULE
CLIP PER PLAN VIEW
HSS PER SCHEDULE
TYP.
3/16
BRACKET TO LATERAL, TYP.
1/8
SECTION

COLUMN DEPTH GREATER THAN OR EQUAL TO 16"

HSS SCHEDULE

COLUMN SPACING, S	HSS SIZE
10'-0"	HSS4x3x5/16 LLV
12'-0"	HSS4x3x5/16 LLV
14'-0"	HSS4x3x⅜ LLV

SPEAKER ATTACHMENT

N.T.S.

F

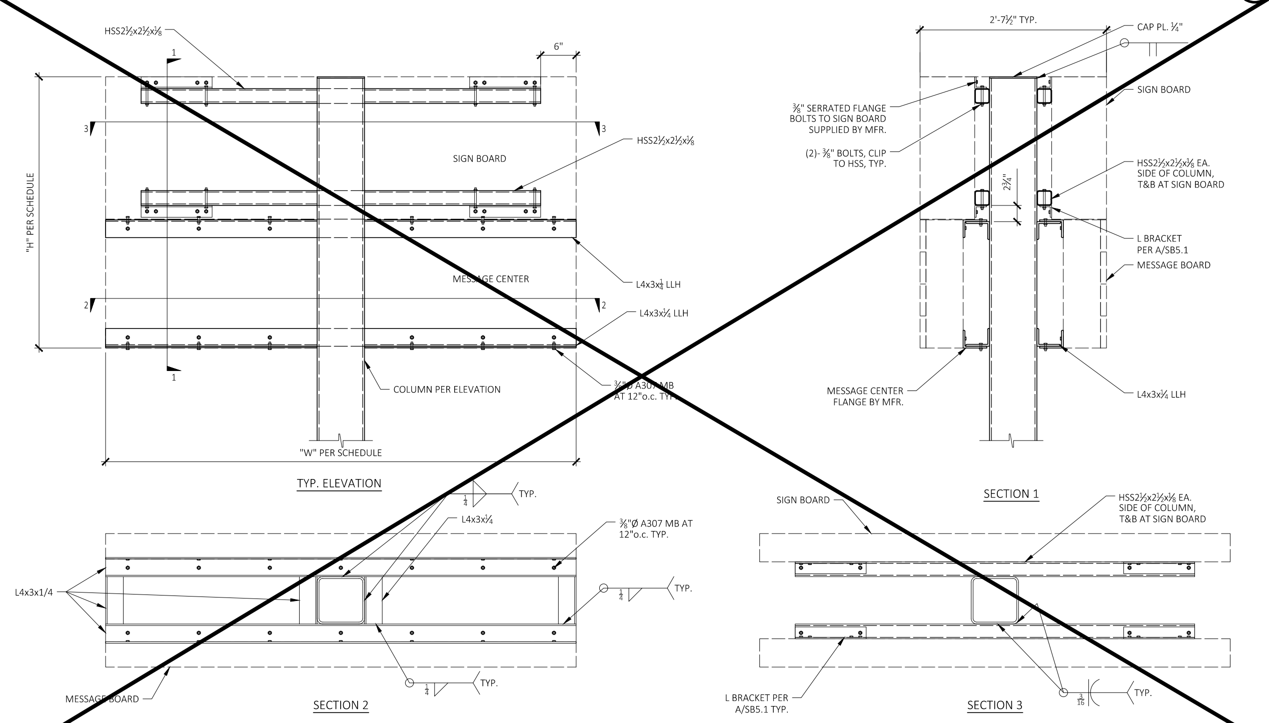
HSS2½x2½x⅛
6"
1
3
3
"H" PER SCHEDULE
HSS2½x2½x⅛
SIGN BOARD
MESSAGE CENTER
L4x3x¼ LLH
2
2
L4x3x¼ LLH
1
COLUMN PER ELEVATION
⅜"Ø A307 MB AT 12"o.c. TYP.
"W" PER SCHEDULE
TYP. ELEVATION
2'-7½" TYP.
CAP PL. ¼"
SIGN BOARD
⅜" SERRATED FLANGE BOLTS TO SIGN BOARD SUPPLIED BY MFR.
(2)- ⅜" BOLTS, CLIP TO HSS, TYP.
2¾"
HSS2½x2½x⅛ EA. SIDE OF COLUMN, T&B AT SIGN BOARD
L BRACKET PER A/SB5.1
MESSAGE BOARD
MESSAGE CENTER FLANGE BY MFR.
L4x3x¼ LLH
SECTION 1
¼
TYP.
L4x3x¼
⅜"Ø A307 MB AT 12"o.c. TYP.
L4x3x1/4
¼
TYP.
MESSAGE BOARD
¼
TYP.
SECTION 2
SIGN BOARD
HSS2½x2½x⅛ EA. SIDE OF COLUMN, T&B AT SIGN BOARD
L BRACKET PER A/SB5.1 TYP.
3/16
TYP.
SECTION 3

MARQUEE CENTER INSTALLATION

N.T.S.

D

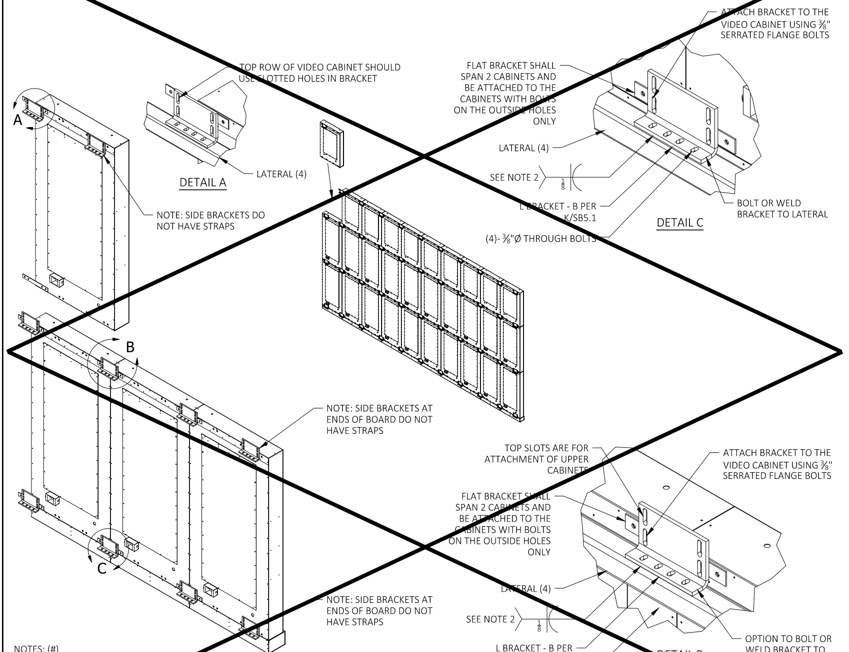
A
TOP ROW OF VIDEO CABINET SHOULD USE SLOTTED HOLES IN BRACKET
LATERAL (4)
DETAIL A
NOTE: SIDE BRACKETS DO NOT HAVE STRAPS
ATTACH BRACKET TO THE VIDEO CABINET USING ⅜" SERRATED FLANGE BOLTS
FLAT BRACKET SHALL SPAN 2 CABINETS AND BE ATTACHED TO THE CABINETS WITH BOLTS ON THE OUTSIDE HOLES ONLY
LATERAL (4)
SEE NOTE 2
1/8
L BRACKET - B PER K/SB5.1
(4)- ⅜"Ø THROUGH BOLTS
BOLT OR WELD BRACKET TO LATERAL
DETAIL C
B
C
NOTE: SIDE BRACKETS AT ENDS OF BOARD DO NOT HAVE STRAPS
TOP SLOTS ARE FOR ATTACHMENT OF UPPER CABINETS
ATTACH BRACKET TO THE VIDEO CABINET USING ⅜" SERRATED FLANGE BOLTS
FLAT BRACKET SHALL SPAN 2 CABINETS AND BE ATTACHED TO THE CABINETS WITH BOLTS ON THE OUTSIDE HOLES ONLY
LATERAL (4)
NOTE: SIDE BRACKETS AT ENDS OF BOARD DO NOT HAVE STRAPS
SEE NOTE 2
1/8
L BRACKET - B PER K/SB5.1
(4)- ⅜"Ø THROUGH BOLTS
OPTION TO BOLT OR WELD BRACKET TO LATERAL
DETAIL B

NOTES: (#)
1. SEE MANUFACTURER DRAWINGS FOR ASSEMBLY ORDER AND LIFTING INSTRUCTIONS
2. OPTION TO ATTACH CLIP TO LATERAL WITH WELD OR BOLTS
3. PROVIDE FILLET WELD WHERE LATERAL WIDTH EXCEEDS BRACKET WIDTH
4. TYPICAL VIDEO BOARD LATERAL IS HSS3X3X¼, SEE K/SB5.2 FOR ATTACHMENT TO COLUMN. SEE B/SB6.1 FOR INDOOR WALL ATTACHMENT.
5. MAX TRIBUTARY AREA TO L-BRACKET SHALL NOT EXCEED 20 S.F.

VIDEO BOARD BRACKET ATTACHMENT

N.T.S.

J

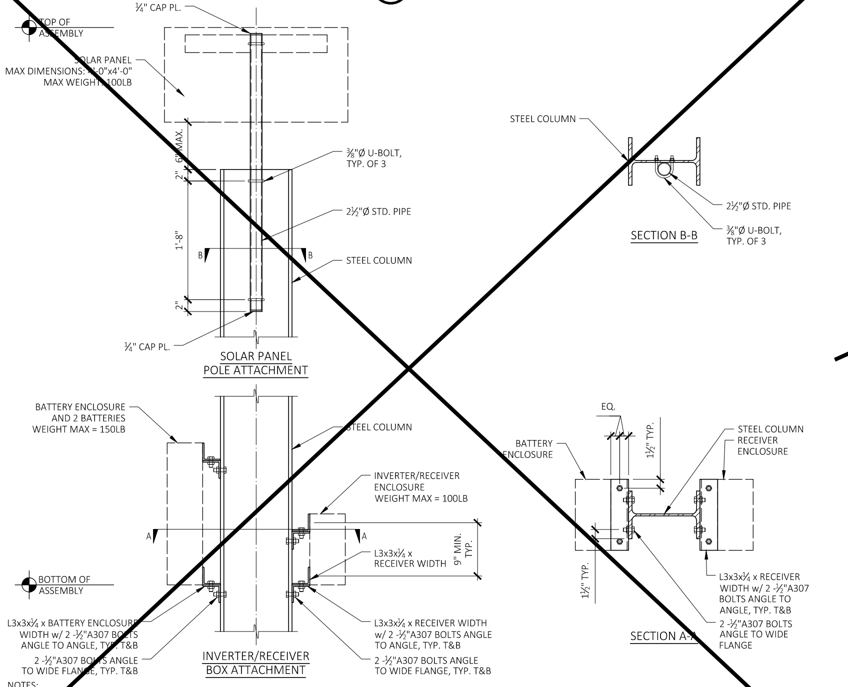
TOP OF ASSEMBLY
¼" CAP PL.
SOLAR PANEL MAX DIMENSIONS: 4'-0"x4'-0" MAX WEIGHT: 100LB
6" MAX.
2"
1'-8"
2"
⅜"Ø U-BOLT, TYP. OF 3
2½"Ø STD. PIPE
B
B
STEEL COLUMN
¼" CAP PL.
SOLAR PANEL POLE ATTACHMENT
STEEL COLUMN
2½"Ø STD. PIPE
⅜"Ø U-BOLT, TYP. OF 3
SECTION B-B
BATTERY ENCLOSURE AND 2 BATTERIES WEIGHT MAX = 150LB
STEEL COLUMN
INVERTER/RECEIVER ENCLOSURE WEIGHT MAX = 100LB
A
A
L3x3x¼ x RECEIVER WIDTH
9" MIN. TYP.
BOTTOM OF ASSEMBLY
L3x3x¼ x BATTERY ENCLOSURE WIDTH w/ 2 -½"A307 BOLTS ANGLE TO ANGLE, TYP. T&B
2 -½"A307 BOLTS ANGLE TO WIDE FLANGE, TYP. T&B
L3x3x¼ x RECEIVER WIDTH w/ 2 -½"A307 BOLTS ANGLE TO ANGLE, TYP. T&B
2 -½"A307 BOLTS ANGLE TO WIDE FLANGE, TYP. T&B
INVERTER/RECEIVER BOX ATTACHMENT
EQ.
1½" TYP.
BATTERY ENCLOSURE
STEEL COLUMN
RECEIVER ENCLOSURE
1½" TYP.
L3x3x¼ x RECEIVER WIDTH w/ 2 -½"A307 BOLTS ANGLE TO ANGLE, TYP. T&B
2 -½"A307 BOLTS ANGLE TO WIDE FLANGE
SECTION A-A

NOTES:
1. THE SOLAR PANEL, BATTERIES AND ENCLOSURE, AND INVERTER/RECEIVER DIMENSIONS SHALL FIT WITHIN THE PERMITTED EXTENT OF SCOREBOARD AS INDICATED IN THE SCOREBOARD ELEVATION AND SCHEDULE.
2. THE SOLAR PANEL, BATTERIES AND ENCLOSURE, AND INVERTER/RECEIVER WEIGHT ALONG WITH ALL OTHER SCOREBOARD COMPONENTS SHALL NOT EXCEED THE WEIGHT INDICATED IN THE SCOREBOARD SCHEDULE.

SOLAR PANEL/BATTERY/ INVERTER/RECEIVER ATTACHMENT

N.T.S.

G

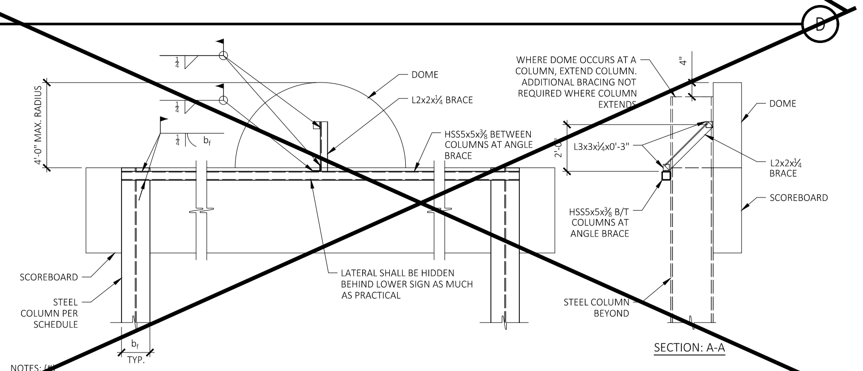
¼
¼
¼
b_f
4'-0" MAX. RADIUS
DOME
L2x2x¼ BRACE
HSS5x5x⅜ BETWEEN COLUMNS AT ANGLE BRACE
SCOREBOARD
STEEL COLUMN PER SCHEDULE
LATERAL SHALL BE HIDDEN BEHIND LOWER SIGN AS MUCH AS PRACTICAL
b_f
TYP.
WHERE DOME OCCURS AT A COLUMN, EXTEND COLUMN. ADDITIONAL BRACING NOT REQUIRED WHERE COLUMN EXTENDS
4"
2'-0"
L3x3x¼x0'-3"
DOME
L2x2x¼ BRACE
SCOREBOARD
HSS5x5x⅜ B/T COLUMNS AT ANGLE BRACE
STEEL COLUMN BEYOND
SECTION: A-A

NOTES: (#)
1. SEE SCOREBOARD ELEVATION AND NOTES

DOME BRACING

N.T.S.

E

IDENTIFICATION STAMP
DIV. OF THE STATE ARCHITECT
APP: 02-123587 INC:
REVIEWED FOR
SS ☑ FLS ☑ ACS ☑
DATE: 01/16/2026

BUEHLER

MICHAEL E. PAROLINI
No. 5405
STRUCTURAL
DATE SIGNED:
04.11.2025
PC SEOR SEAL

THESE DRAWINGS, NOTES AND DETAILS ARE INSTRUMENTS OF SERVICE AND ARE THE PROPERTY OF BUEHLER ENGINEERING INC. ALL DRAWINGS, INFORMATION, SPECIFICATIONS, IDEAS, DESIGNS AND ARRANGEMENTS REPRESENTED WITHIN THESE DOCUMENTS SHALL REMAIN THE PROPERTY OF THE ENGINEER. NO PART THEREOF SHALL BE COPIED, DISCLOSED TO OTHERS OR USED IN CONNECTION WITH ANY WORK OR PROJECT OTHER THAN THE SPECIFIC PROJECT FOR WHICH THEY HAVE BEEN PREPARED AND DEVELOPED WITHOUT THE EXPRESSED WRITTEN CONSENT OF THE ENGINEER. COPYRIGHT 2025.
THANK YOU FOR YOUR INTEREST IN NEVCO SCOREBOARD PRODUCTS

NEVCO
301 East Harris Avenue, Greenville, Illinois 62246
Phone: (618) 664-0360
www.nevco.com

APPROVED
DIV. OF THE STATE ARCHITECT
APP: 04-124534 PC
REVIEWED FOR
SS ☑ FLS ☑ ACS ☑ CG ☐
DATE: 05/14/2025
DSA STAMP

PRE-CHECK (PC) DOCUMENT
CODE: 2022

A separate project application
for construction is required.

LODI HS
BASEBALL & SOFTBALL
SCOREBOARD:
MODEL 1608, 18' WIDE x 6' HIGH,
COLUMNS BOLTED TO PIERS
2022 CBC

ATTACHMENT
DETAILS

SHEET INFORMATION
DATE 04.11.2025
DRAWN JMK
CHECKED MEP
SSG JOB # S23109
SHEET SB5.1

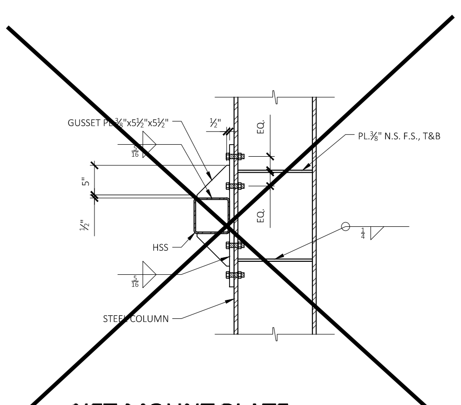
GUSSET PL.½"x5½"x5½"
PL.½" N.S. F.S., T&B
EQ.
EQ.
HSS
STEEL COLUMN

NET MOUNT PLATE

N.T.S.

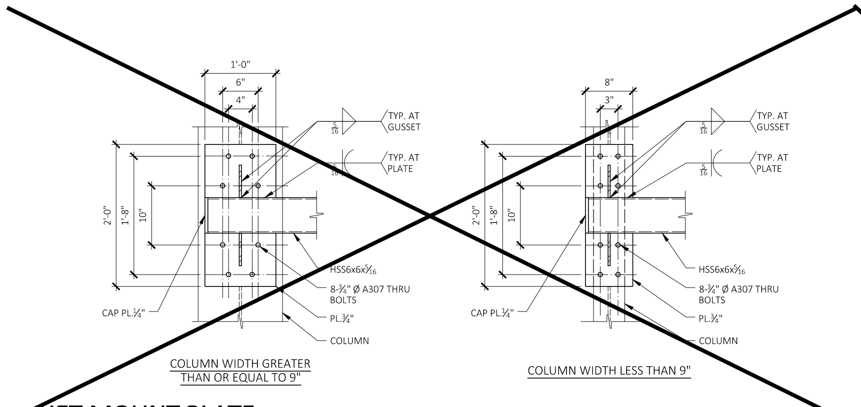
1'-0"
6"
4"
TYP. AT GUSSET
TYP. AT PLATE
2'-0"
1'-8"
10"
HSS6x6x5⁄16
8-¾" Ø A307 THRU BOLTS
PL.½"
CAP PL.¼"
COLUMN
COLUMN WIDTH GREATER THAN OR EQUAL TO 9"
8"
3"
COLUMN WIDTH LESS THAN 9"

NET MOUNT PLATE

N.T.S.

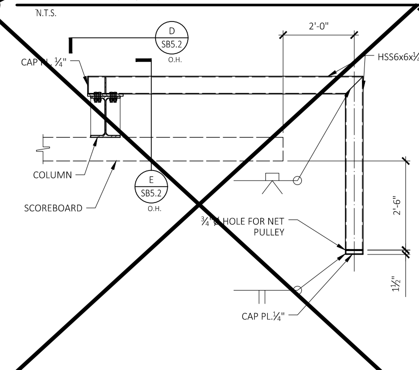
D SB5.2 O.H.
2'-0"
CAP PL.¼"
HSS6x6x¼
COLUMN
SCOREBOARD
E SB5.2 O.H.
¾"Ø HOLE FOR NET PULLEY
2'-6"
1½"
CAP PL.¼"

BOTTOM NET MOUNT-PLAN

N.T.S.

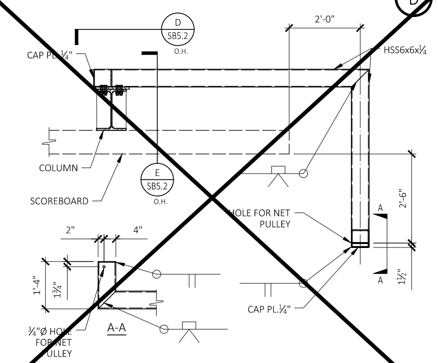
D SB5.2 O.H.
2'-0"
CAP PL.¼"
HSS6x6x¼
COLUMN
SCOREBOARD
E SB5.2 O.H.
¾"Ø HOLE FOR NET PULLEY
2'-6"
2"
4"
1'-4"
1½"
A-A
CAP PL.¼"

TOP NET MOUNT-PLAN

N.T.S.

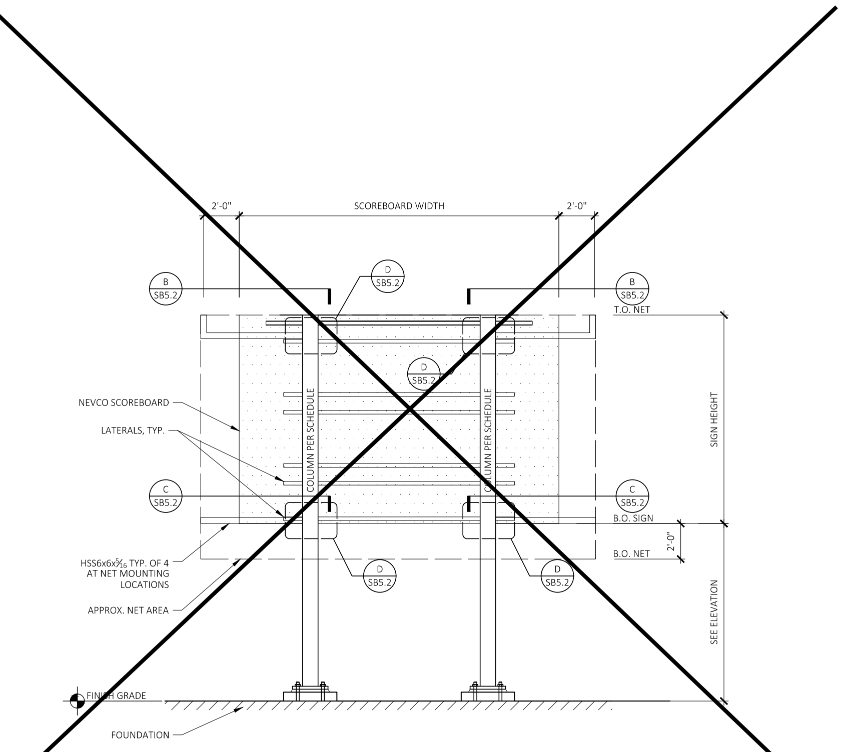
2'-0"
SCOREBOARD WIDTH
2'-0"
B SB5.2
D SB5.2
T.O. NET
NEVCO SCOREBOARD
LATERALS, TYP.
COLUMN PER SCHEDULE
SIGN HEIGHT
C SB5.2
B.O. SIGN
B.O. NET
HSS6x6x5⁄16 TYP. OF 4 AT NET MOUNTING LOCATIONS
APPROX. NET AREA
SEE ELEVATION
FINISH GRADE
FOUNDATION

NOTES:
1. ELEVATION SHOWN WITH TWO COLUMNS FOR GRAPHICAL PURPOSES. NET SUPPORT DETAILS APPLICABLE TO TWO, THREE, AND FOUR COLUMN ASSEMBLIES

SCOREBOARD NETTING SUPPORTS

N.T.S.

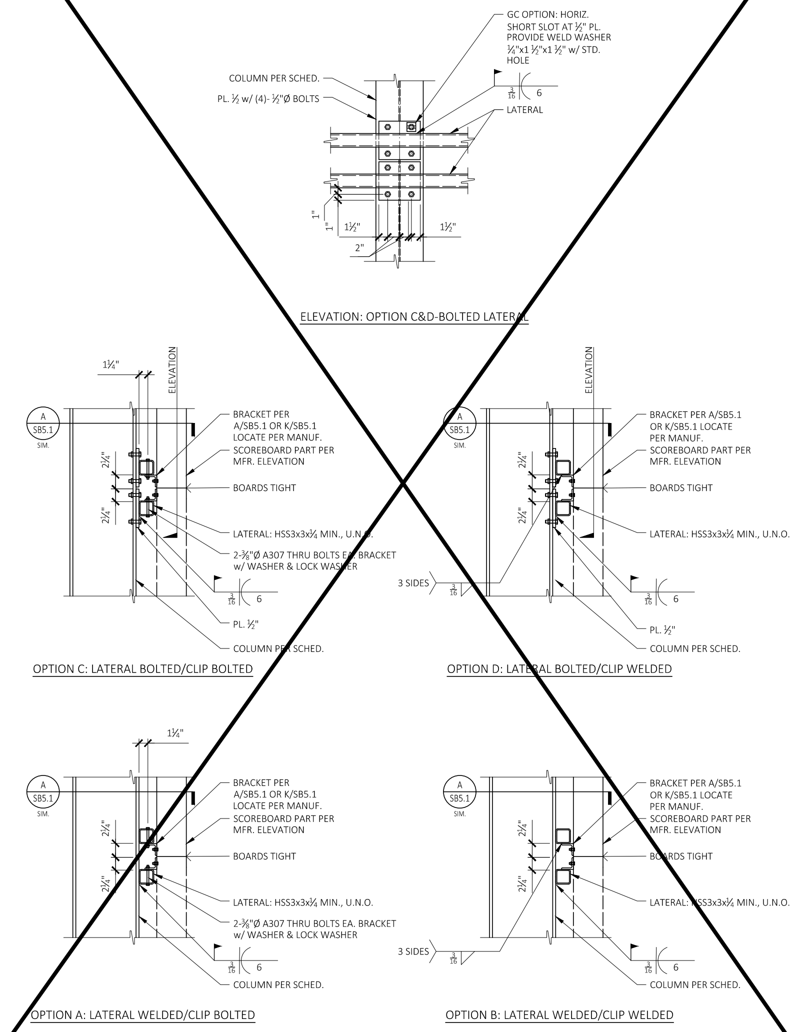
GC OPTION: HORIZ. SHORT SLOT AT ½" PL. PROVIDE WELD WASHER ⅜"x1 ½"x1 ½" w/ STD. HOLE
COLUMN PER SCHED.
PL. ½ w/ (4)- ½"Ø BOLTS
LATERAL
ELEVATION: OPTION C&D-BOLTED LATERAL
BRACKET PER A/SB5.1 OR K/SB5.1 LOCATE PER MANUF.
SCOREBOARD PART PER MFR. ELEVATION
BOARDS TIGHT
LATERAL: HSS3x3x¼ MIN., U.N.O.
2-⅜"Ø A307 THRU BOLTS EA. BRACKET w/ WASHER & LOCK WASHER
PL. ½"
COLUMN PER SCHED.
3 SIDES
OPTION C: LATERAL BOLTED/CLIP BOLTED
OPTION D: LATERAL BOLTED/CLIP WELDED
OPTION A: LATERAL WELDED/CLIP BOLTED
OPTION B: LATERAL WELDED/CLIP WELDED

LATERAL/BOARD ATTACHMENT

N.T.S.

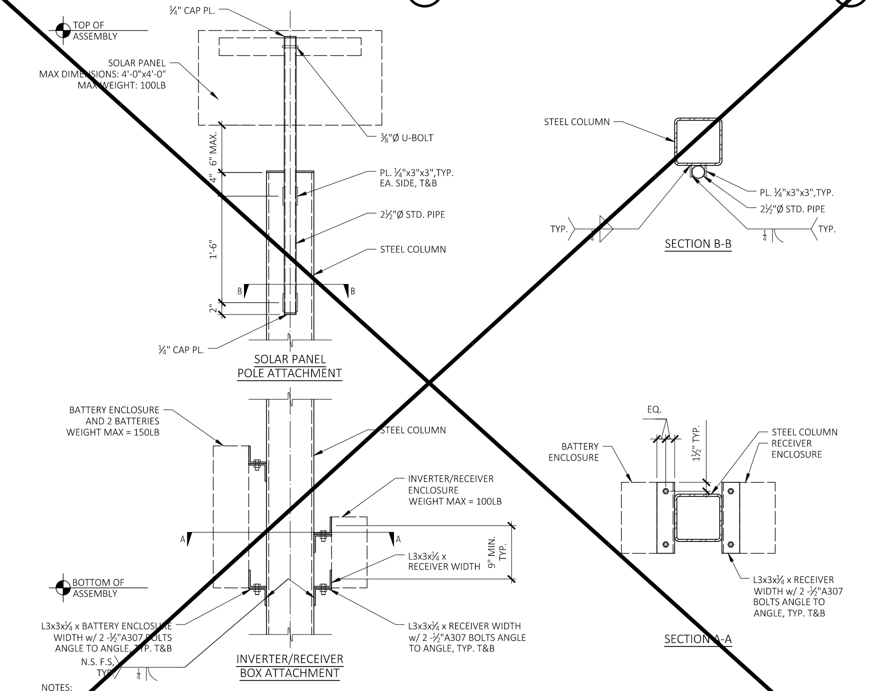
TOP OF ASSEMBLY
¼" CAP PL.
SOLAR PANEL MAX DIMENSIONS: 4'-0"x4'-0" MAX WEIGHT: 100LB
⅜"Ø U-BOLT
PL. ¼"x3"x3",TYP. EA. SIDE, T&B
2½"Ø STD. PIPE
STEEL COLUMN
SOLAR PANEL POLE ATTACHMENT
SECTION B-B
BATTERY ENCLOSURE AND 2 BATTERIES WEIGHT MAX = 150LB
INVERTER/RECEIVER ENCLOSURE WEIGHT MAX = 100LB
L3x3x¼ x RECEIVER WIDTH
BOTTOM OF ASSEMBLY
L3x3x¼ x BATTERY ENCLOSURE WIDTH w/ 2 -½"A307 BOLTS ANGLE TO ANGLE, TYP. T&B
L3x3x¼ x RECEIVER WIDTH w/ 2 -½"A307 BOLTS ANGLE TO ANGLE, TYP. T&B
N.S. F.S, TYP.
INVERTER/RECEIVER BOX ATTACHMENT
SECTION A-A

NOTES:
1. THE SOLAR PANEL, BATTERIES AND ENCLOSURE, AND INVERTER/RECEIVER DIMENSIONS SHALL FIT WITHIN THE PERMITTED EXTENT OF SIGN AS INDICATED IN THE MARQUEE ELEVATION AND SCHEDULE.
2. THE SOLAR PANEL, BATTERIES AND ENCLOSURE, AND INVERTER/RECEIVER WEIGHT ALONG WITH ALL OTHER SIGN COMPONENTS SHALL NOT EXCEED THE WEIGHT INDICATED IN THE MARQUEE SCHEDULE.

SOLAR PANEL/BATTERY/ INVERTER/RECEIVER ATTACHMENT

N.T.S.

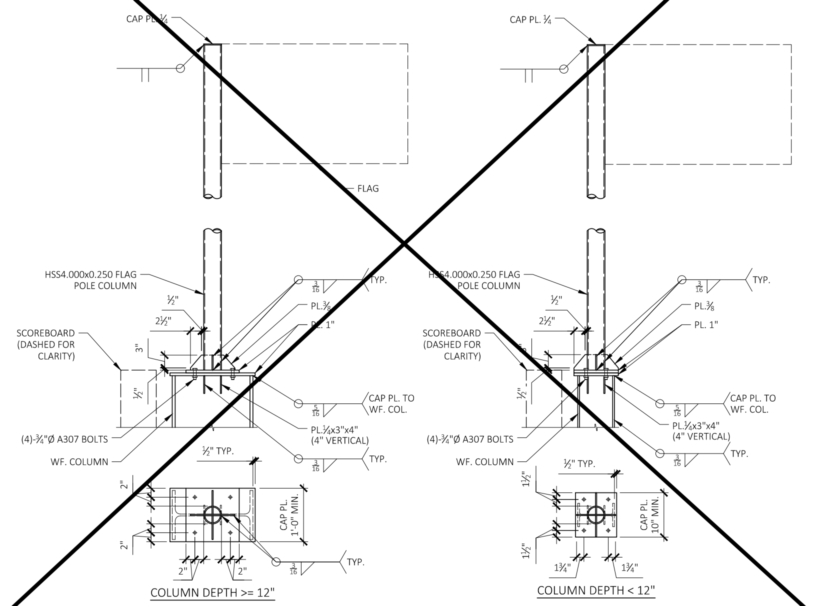
CAP PL.½
FLAG
HSS4.000x0.250 FLAG POLE COLUMN
SCOREBOARD (DASHED FOR CLARITY)
PL.⅜
PL.1"
CAP PL. TO WF. COL.
PL.⅜x3"x4" (4" VERTICAL)
(4)-¾"Ø A307 BOLTS
WF. COLUMN
COLUMN DEPTH >= 12"
COLUMN DEPTH < 12"

FLAG POLE COLUMN TO WF BEAM

N.T.S.

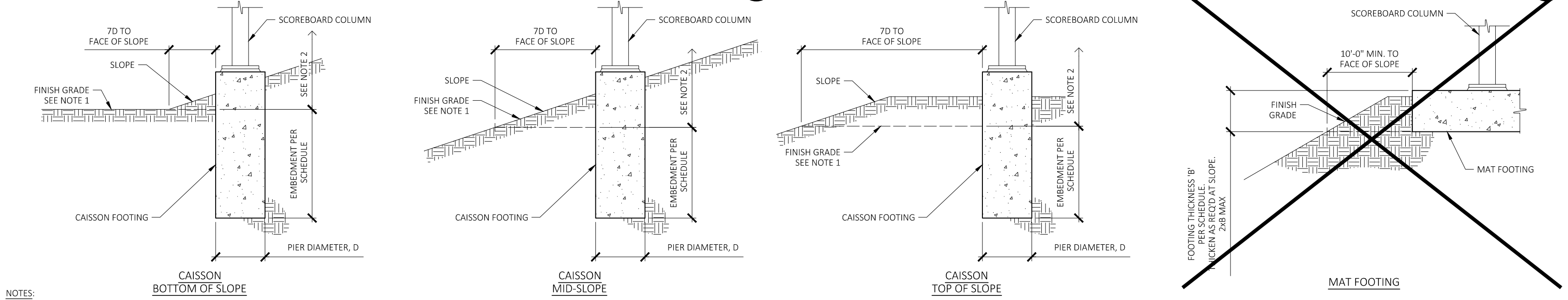
SCOREBOARD COLUMN
7D TO FACE OF SLOPE
SLOPE
FINISH GRADE SEE NOTE 1
SEE NOTE 2
EMBEDMENT PER SCHEDULE
CAISSON FOOTING
PIER DIAMETER, D
CAISSON BOTTOM OF SLOPE
CAISSON MID-SLOPE
CAISSON TOP OF SLOPE
10'-0" MIN. TO FACE OF SLOPE
FINISH GRADE
FOOTING THICKNESS 'B' PER SCHEDULE. THICKEN AS REQ'D AT SLOPE. 2xB MAX
MAT FOOTING

NOTES:
1. REFERENCE FINISH GRADE FOR DETERMINATION OF MAXIMUM SCOREBOARD HEIGHT.
2. SEE TYPICAL SCOREBOARD INSTALLATION DETAIL FOR MAXIMUM ASSEMBLY HEIGHT AND CLEARANCE TO BOTTOM OF SCOREBOARD.

DISTANCE TO SLOPE

N.T.S.

S:\2023\23109\03 PRODUCTION\03 DRAWINGS\S23109 - DET - SB5.2.DWG

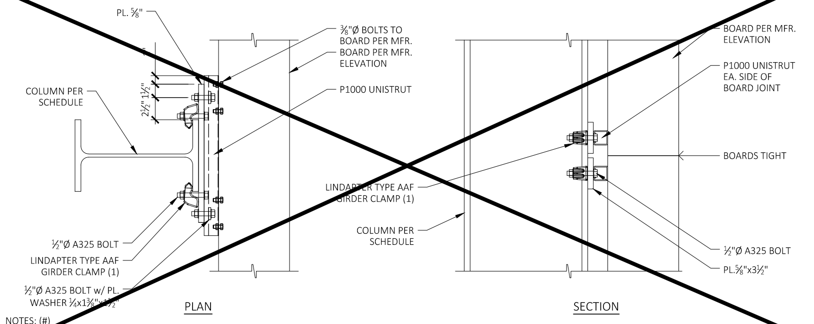
PL.⅝"
⅜"Ø BOLTS TO SCOREBOARD PER MFR.
BOARD PER MFR. ELEVATION
P1000 UNISTRUT
COLUMN PER SCHEDULE
LINDAPTER TYPE AAF GIRDER CLAMP (1)
½"Ø A325 BOLT
½"Ø A325 BOLT w/ PL. WASHER ¼x1⅜"x1½"
PLAN
BOARD PER MFR. ELEVATION
P1000 UNISTRUT EA. SIDE OF BOARD JOINT
BOARDS TIGHT
PL.⅝"x3½"
SECTION

NOTES: (#)
1. LAAF030 CLAMP WITH ROCKING WASHER - INSTALL PER ICC ESR-3976

ALTERNATE BOARD ATTACHMENT

N.T.S.

IDENTIFICATION STAMP
DIV. OF THE STATE ARCHITECT
APP: 02-123587 INC:
REVIEWED FOR
SS ☑ FLS ☑ ACS ☑
DATE: 01/16/2026

BUEHLER

MICHAEL E. PAROLINI
No. 5405
PC SEOR SEAL
DATE SIGNED: 04.11.2025

THESE DRAWINGS, NOTES AND DETAILS ARE INSTRUMENTS OF SERVICE AND ARE THE PROPERTY OF BUEHLER ENGINEERING INC. ALL DRAWINGS, INFORMATION, SPECIFICATIONS, IDEAS, DESIGNS AND ARRANGEMENTS REPRESENTED WITHIN THESE DOCUMENTS SHALL REMAIN THE PROPERTY OF THE ENGINEER. NO PART THEREOF SHALL BE COPIED, DISCLOSED TO OTHERS OR USED IN CONNECTION WITH ANY WORK OR PROJECT OTHER THAN THE SPECIFIC PROJECT FOR WHICH THEY HAVE BEEN PREPARED AND DEVELOPED WITHOUT THE EXPRESSED WRITTEN CONSENT OF THE ENGINEER. COPYRIGHT 2025.
THANK YOU FOR YOUR INTEREST IN NEVCO SCOREBOARD PRODUCTS

NEVCO
301 East Harris Avenue, Greenville, Illinois 62246
Phone: (618) 664-0360
www.nevco.com

~~APPROVED
DIV. OF THE STATE ARCHITECT
APP: 04-124534 -PC
REVIEWED FOR
SS ☑ FLS ☑ ACS ☑ CG ☐
DATE: 05/14/2025~~
DSA STAMP

PRE-CHECK (PC) DOCUMENT
CODE: 2022

A separate project application
for construction is required.

**LODI HS
BASEBALL & SOFTBALL
SCOREBOARD:
MODEL 1608, 18' WIDE x 6' HIGH,
COLUMNS BOLTED TO PIERS
2022 CBC**

OPTIONAL SCOREBOARD FEATURE ATTACHMENT DETAILS

SHEET INFORMATION

DATE	04.11.2025
DRAWN	JMK
CHECKED	MEP
SSG JOB #	S23109
SHEET	SB5.2