Data Sheet

Donaldson
Torit® DCE®

Unimaster Dust Collectors

Series UMA 750

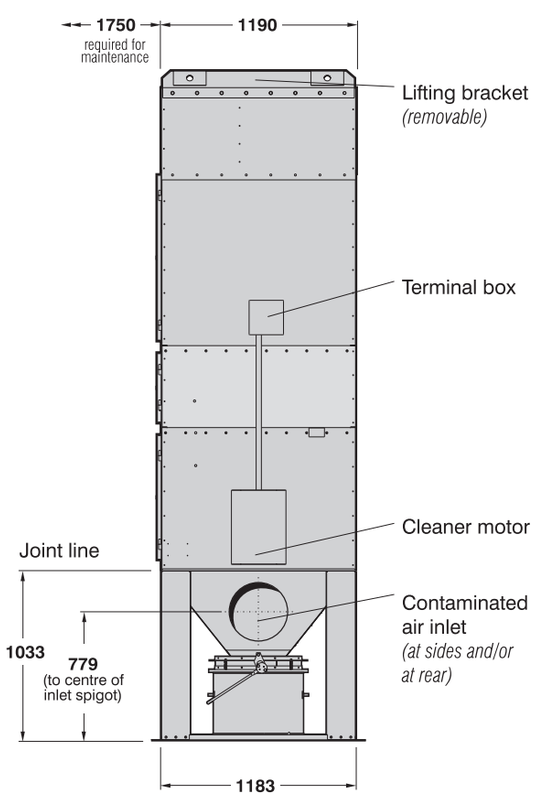

SIDE ELEVATION

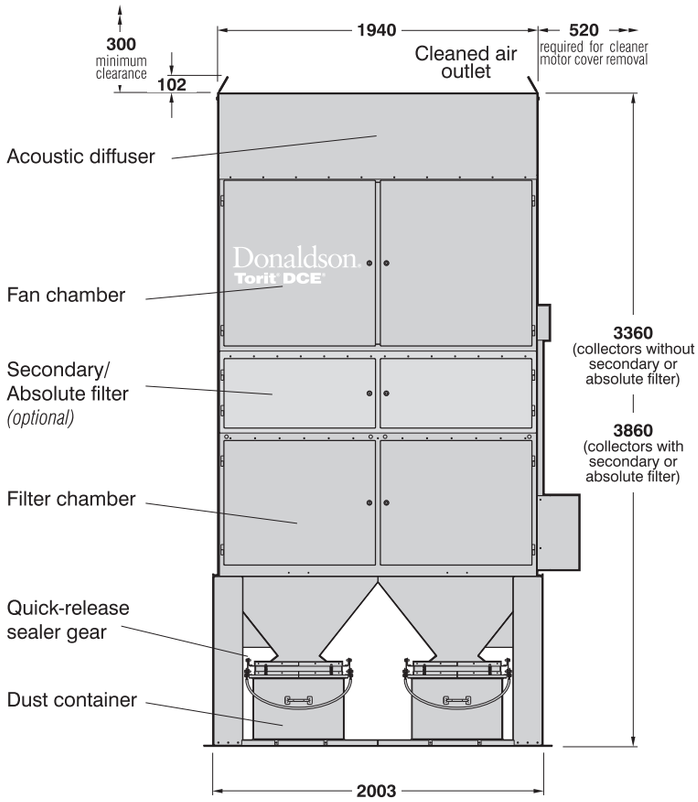

FRONT ELEVATION

UNIMASTER DUST COLLECTOR WITH DUST CONTAINER

Suitable for inside locations

SPECIFICATIONS

Type	Filtration area	Inlet spigot (inside dia.)	Fan	Motor rating	Dust container (x2)	Net weight (approx.)
UMA 756	70 m^2	Ø 355 mm	KV15	11.0 kW	80 litre	1185 kg*
			KV18	15.0 kW		1200 kg*
			KV21	18.5 kW		1305 kg*

*Increase weight by 193 kg for collectors with secondary or absolute filter

Donaldson reserve the right to alter design without notice.

Donaldson®

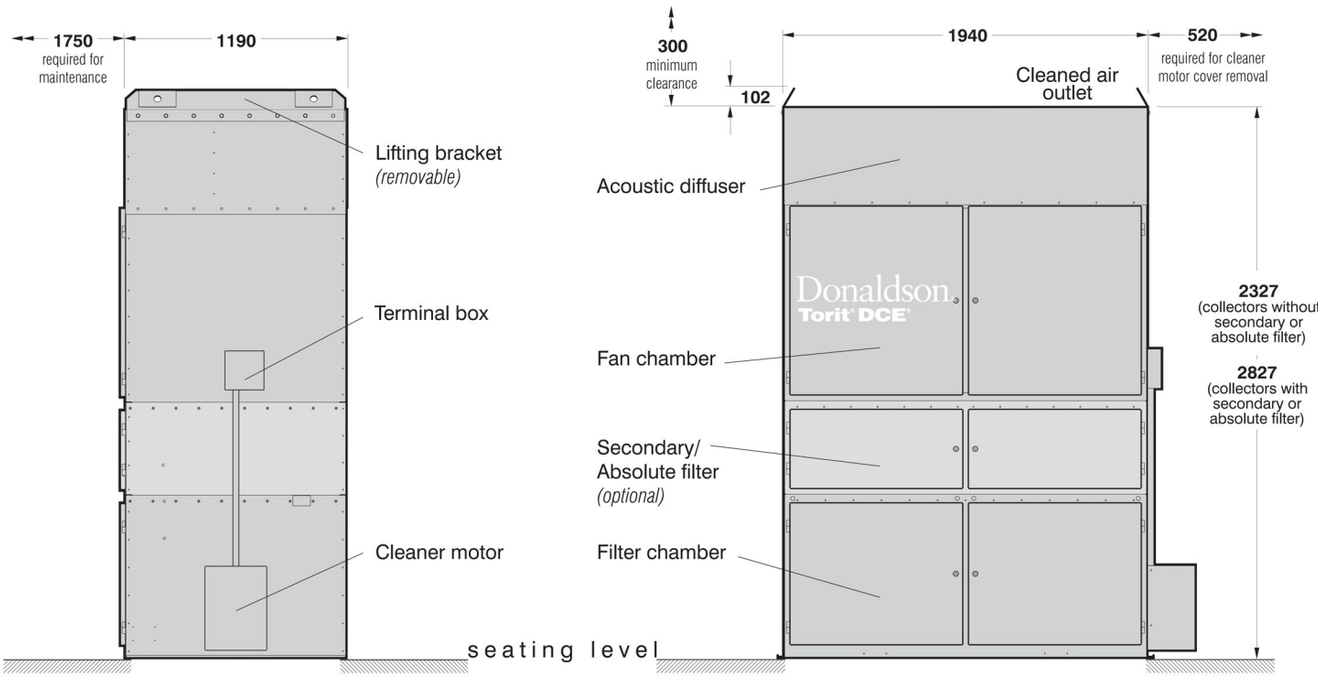

SIDE ELEVATION

FRONT ELEVATION

UNIMASTER HOPPER TYPE DUST COLLECTOR

Suitable for inside locations

SPECIFICATIONS

Type	Filtration area	Fan	Motor rating	Net weight (approx.)
UMA 750H	70 m^2	KV15	11.0 kW	1000 kg*
		KV18	15.0 kW	1015 kg*
		KV21	18.5 kW	1120 kg*

*Increase weight by 193 kg for collectors with secondary or absolute filter

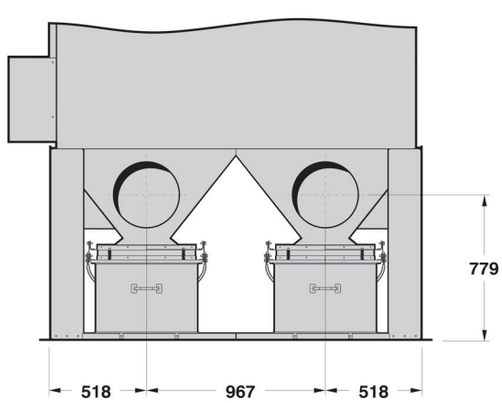

REAR ELEVATION

POSITION OF REAR CONTAMINATED AIR INLETS

Unimaster Dust Collectors – Series UMA 750

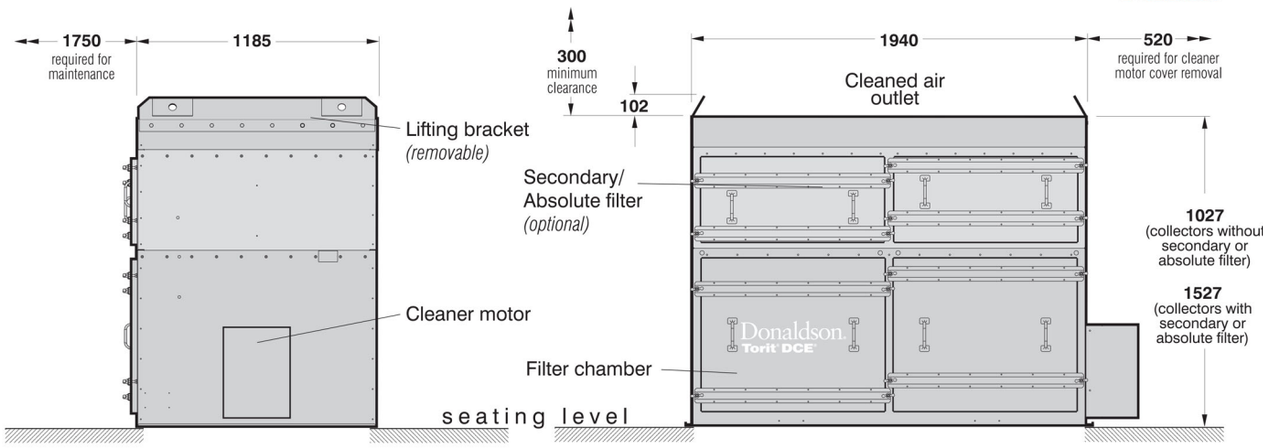

UNIMASTER VENTING TYPE DUST COLLECTOR

Suitable for inside locations

SPECIFICATIONS

Type	Filtration area	Net weight (approx.)
UMA 750V	70 m²	467 kg*

*Increase weight by 193 kg for collectors with secondary or absolute filter

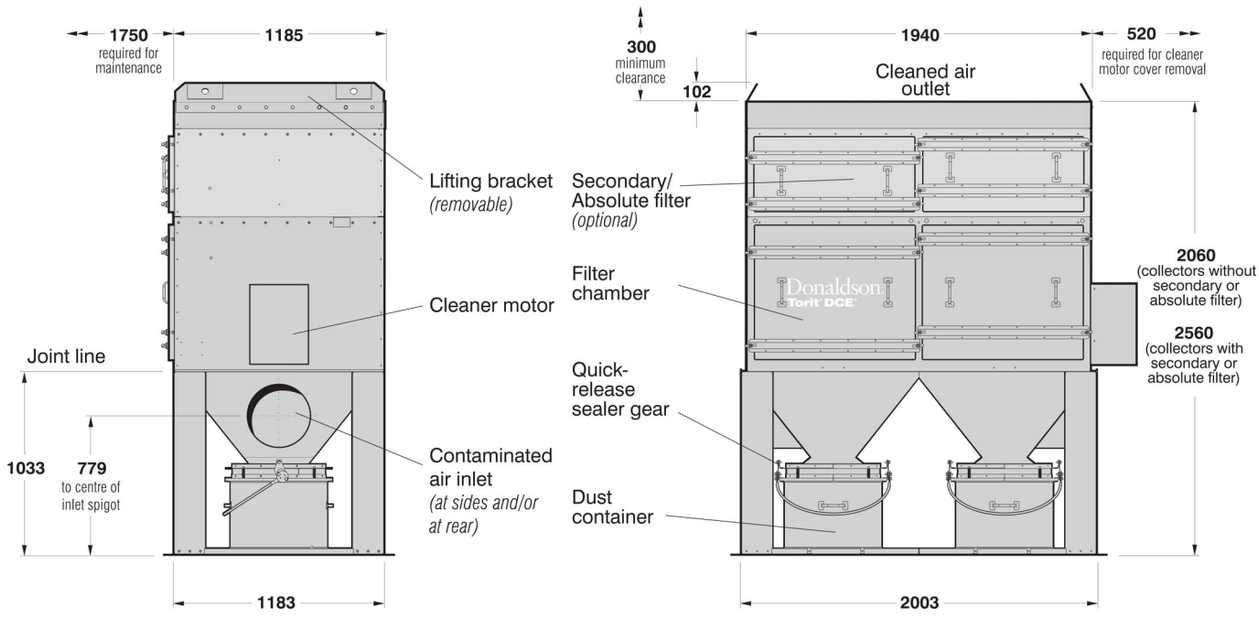

UNIMASTER VENTING TYPE DUST COLLECTOR WITH DUST CONTAINERS

Suitable for inside locations

SPECIFICATIONS

Type	Filtration area	Inlet spigot (inside dia.)	Dust container (x2)	Net weight (approx.)
UMA 756V	70 m²	Ø 355 mm	80 litre	652 kg*

*Increase weight by 193 kg for collectors with secondary or absolute filter

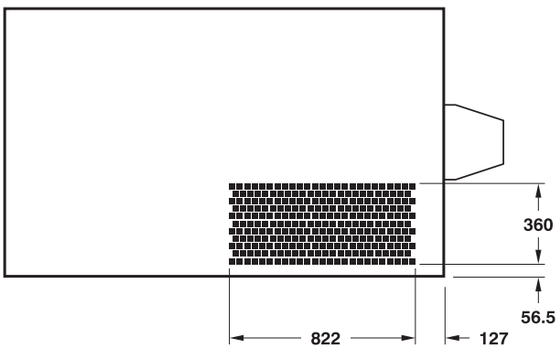

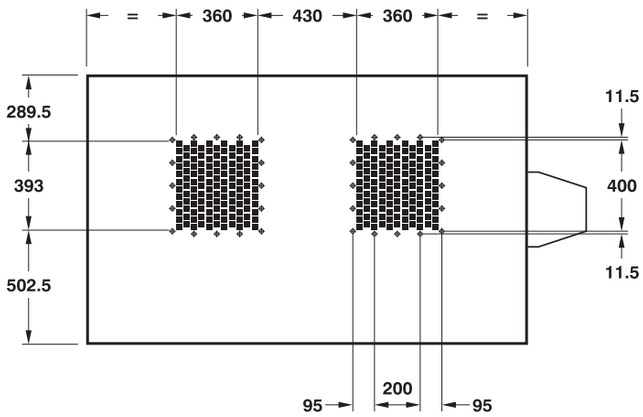

Standard and Hopper type colllectors

Venting type colllectors

All holes Ø 3.5 mm. Pitch centres: 100 mm.

CLEANED AIR OUTLET DETAILS

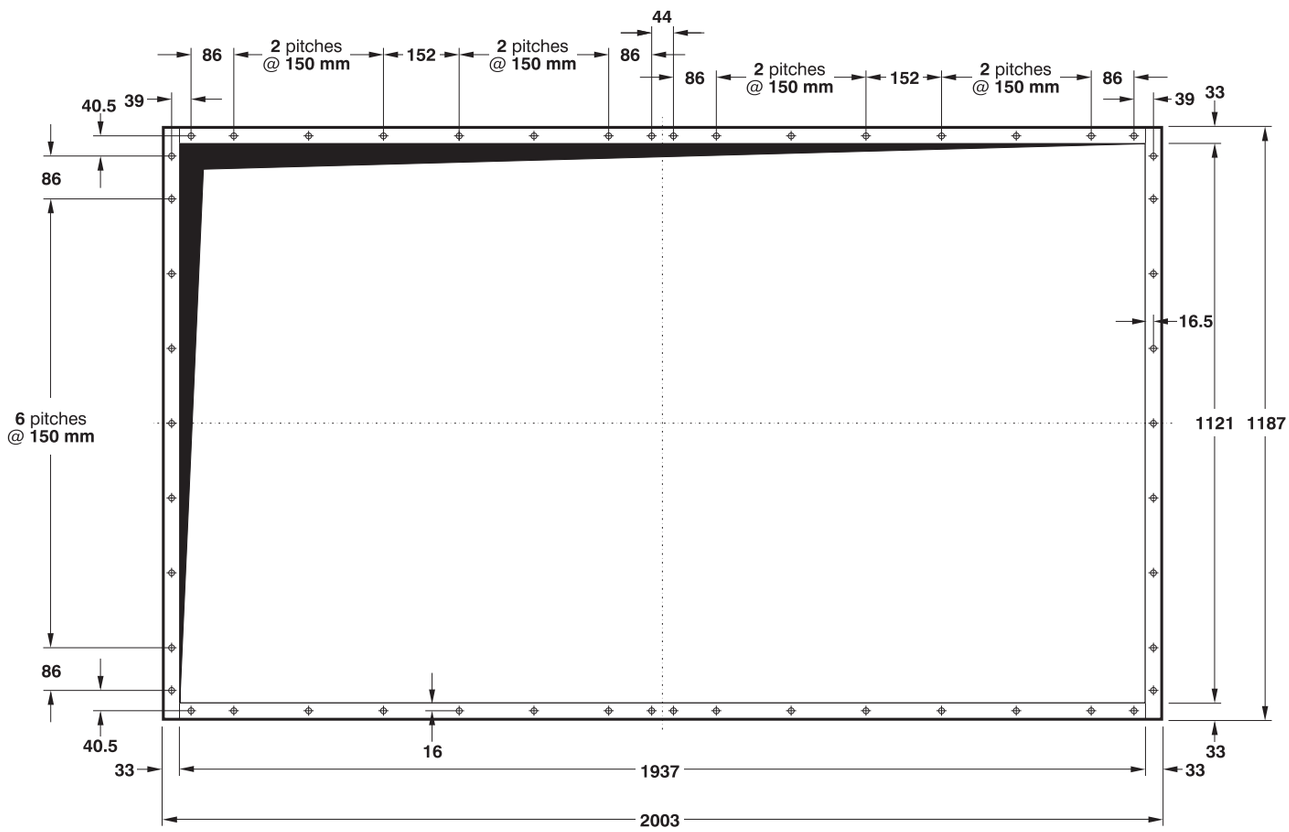

APERTURE AND MOUNTING FLANGE DETAILS FOR HOPPER AND VENTING TYPE COLLECTORS

All holes Ø12 mm for M10 bolts

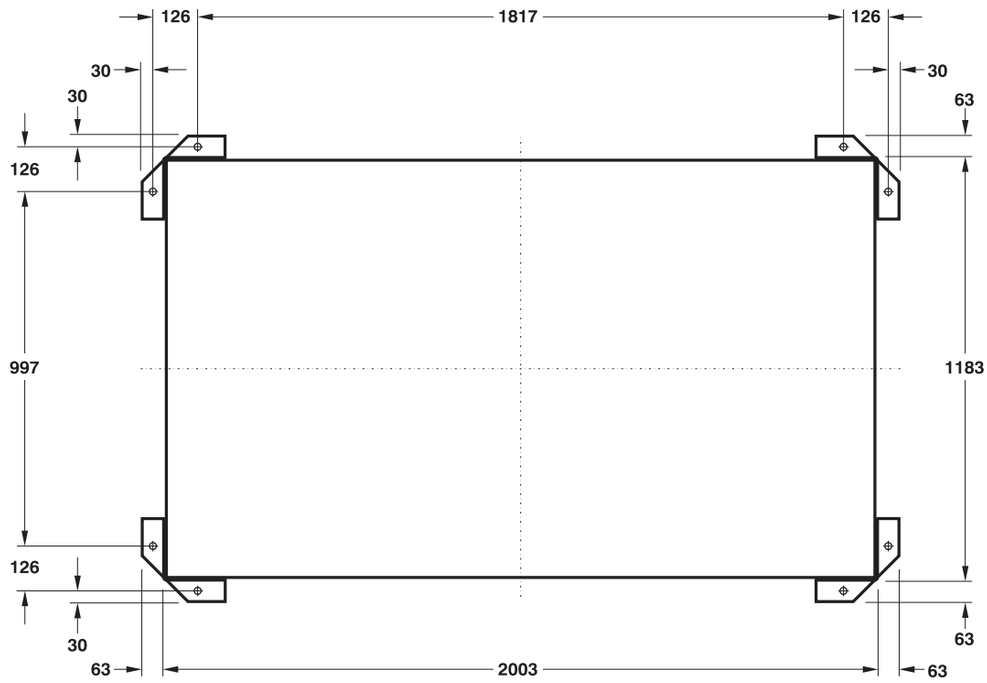

FOUNDATION DETAILS FOR COLLECTORS WITH DUST CONTAINERS

All holes Ø20 mm for suitable fixings (minimum M10)

NOISE LEVELS

Machinery noise levels are an important consideration in the design and selection of new equipment. Several EC Directives and National Laws/Regulations adopting these directives make reference to airborne noise emissions. Actions that employers are required to comply with if employees are subjected to a daily personal noise exposure Lep,d of 85 dB(A) or more are also specified.

All Unimaster dust collectors, when fitted with an acoustic diffuser, secondary filter or absolute filter, operating an 8 hour shift, are below this action limit.

WEIGHTED SOUND PRESSURE LEVELS

All readings were taken in normal industrial areas, i.e. semi-reverberant surroundings, with local equipment silent. Measurements were taken at maximum air flow conditions at 1.0 metre radius from the equipment housing and 1.6 metres above base level, using a precision sound level meter and octave filter.

KV15	KV18	KV21
77 dB(A)*	79 dB(A)	80 dB(A)*

Noise levels of installed equipment may vary due to site conditions. *Estimated data.

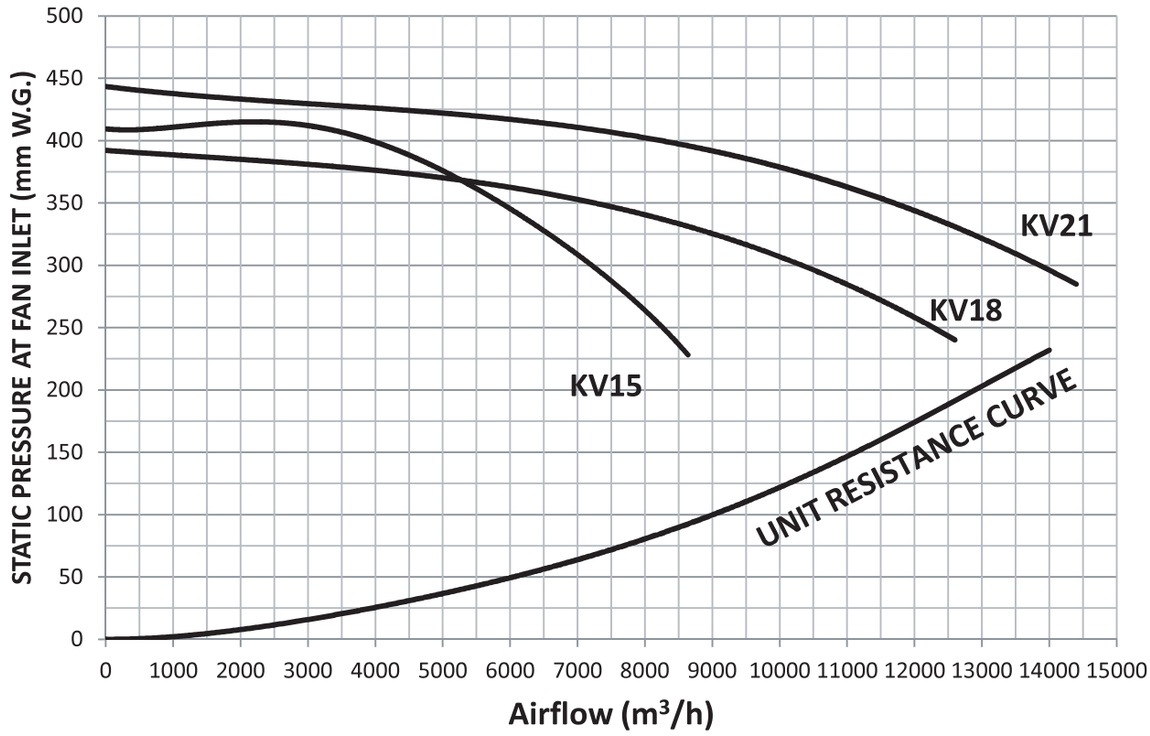

UNIT PERFORMANCE CURVES

FAN SELECTION

These curves indicate static pressure available at fan inlet for a given volume when fitted inside a Unimaster dust collector.

To select the most suitable fan for a given application:

1. Determine the air volume, in m³/h, needed to entrain the dust.
2. Read off the unit resistance, in mm W.G., at air volume required.
3. Assess pressure drop over filter bags prior to cleaning, usually 50 to 100 mm W.G.
4. Estimate pressure drop through connected system – i.e. between point of entrainment and collector inlet.
5. The sum of **2**, **3** and **4** = W.G. required.
6. Consult graph for fan performances available.

DUST CONTAINER

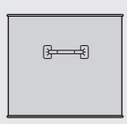

80 litre
(3 cu.ft.)

Size	Approx. net weight
80 litre	6 kg

A reasonable total load for removal by hand would be 25 kg

Typical dust densities

Dust	Density with 50% voidage
Sander	0.13 kg/litre
Graphite	0.80 kg/litre
Sand	1.33 kg/litre
Iron	3.58 kg/litre
Steel	3.72 kg/litre

ELECTRICAL REQUIREMENTS

UCS Controller

Voltage input: 380-420V, Three Phase, 50Hz
440-480V, Three Phase, 60Hz
or to suit local voltage

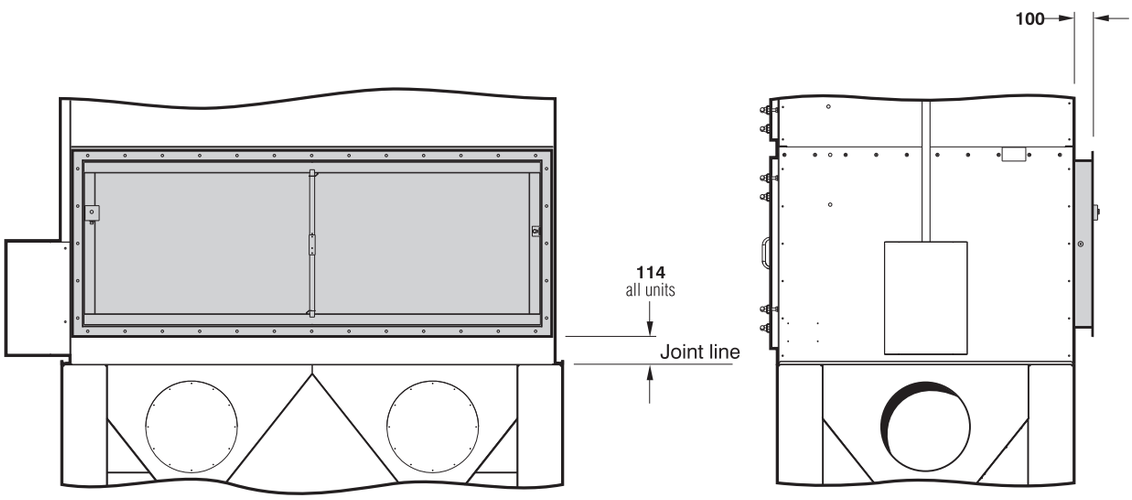

REAR ELEVATION SIDE ELEVATION

POSITION OF OPTIONAL EXPLOSION RELIEF FLANGE

If a vent duct is not connected to the explosion relief flange, then a minimum clearance of 500 mm should be made to the rear of the collector to ensure efficient operation of the explosion venting process. Consideration should be given to the local surrounding area in regards to the pressure and flame effects.

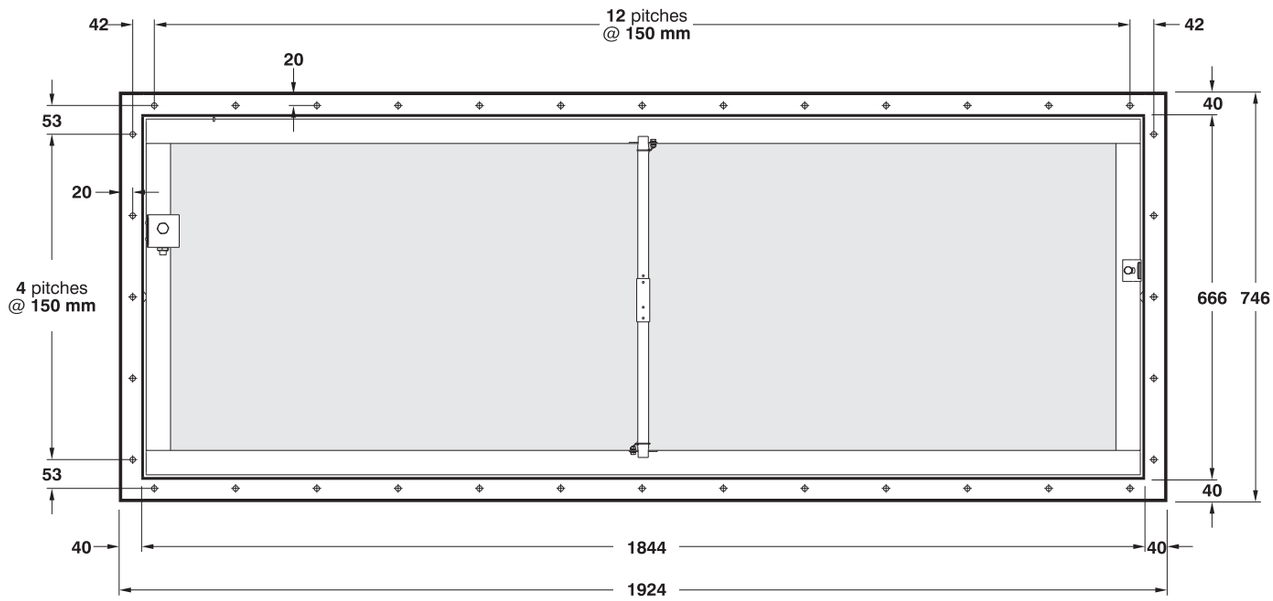

OPTIONAL EXPLOSION RELIEF FLANGE MOUNTING DETAILS

All holes Ø10 mm for M8 bolts

Unimaster Dust Collectors – Series UMA 750

DESIGN LIMITS (standard equipment)

Temperature range: -10° to +60°C

Pressure limits:
Collecters with fan: As fan performance curves from shut-off to operating pressure
Venting type collectors: -300 mm W.G. to +250 mm W.G.

Dimension tolerances: ±3 mm on main dimensions; ±2 mm on detail dimensions

Donaldson
FILTRATION SOLUTIONS

www.donaldson.com

Donaldson Australasia
Tel: 1800 503 878 (AU)
Tel: 0800 743 387 (NZ)
Website: www.donaldsonfilters.com.au

Donaldson China
Tel: 400 820 1038
Website: www.donaldson.cn

Donaldson South Asia
Tel: +91 124 480 7536
Website: www.india.donaldson.com

Donaldson Japan
Tel: +81 42 540 4114
Website: www.donaldson.co.jp

Donaldson Korea
Tel: +82 251 733 33
Website: www.donaldson.co.kr

Donaldson Europe
Tel: +32 16 383 811
Website: www.donaldson.com

Donaldson Southeast Asia
Tel: +65 6349 8168
Website: www.asia.donaldson.com

Donaldson USA
Tel: +1 800 365 1331
Website: www.donaldsontorit.com