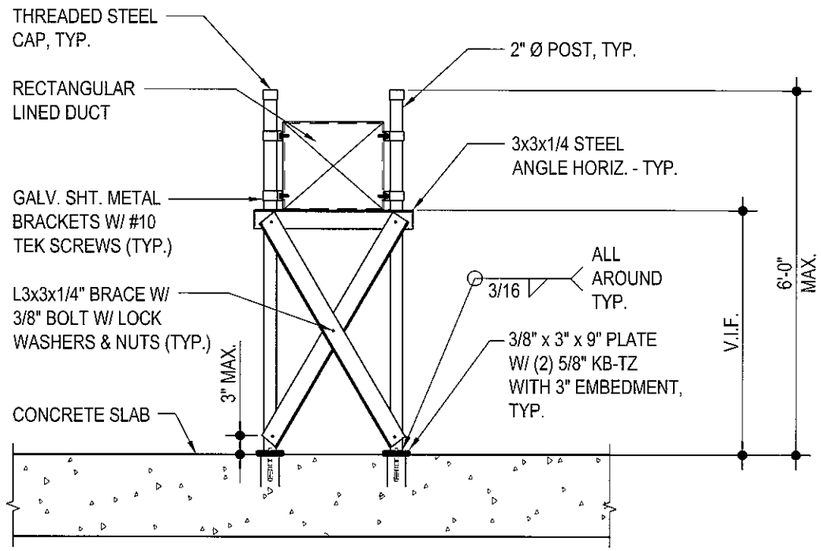

SECTION 2

SCALE : 1/2" = 1'-0"

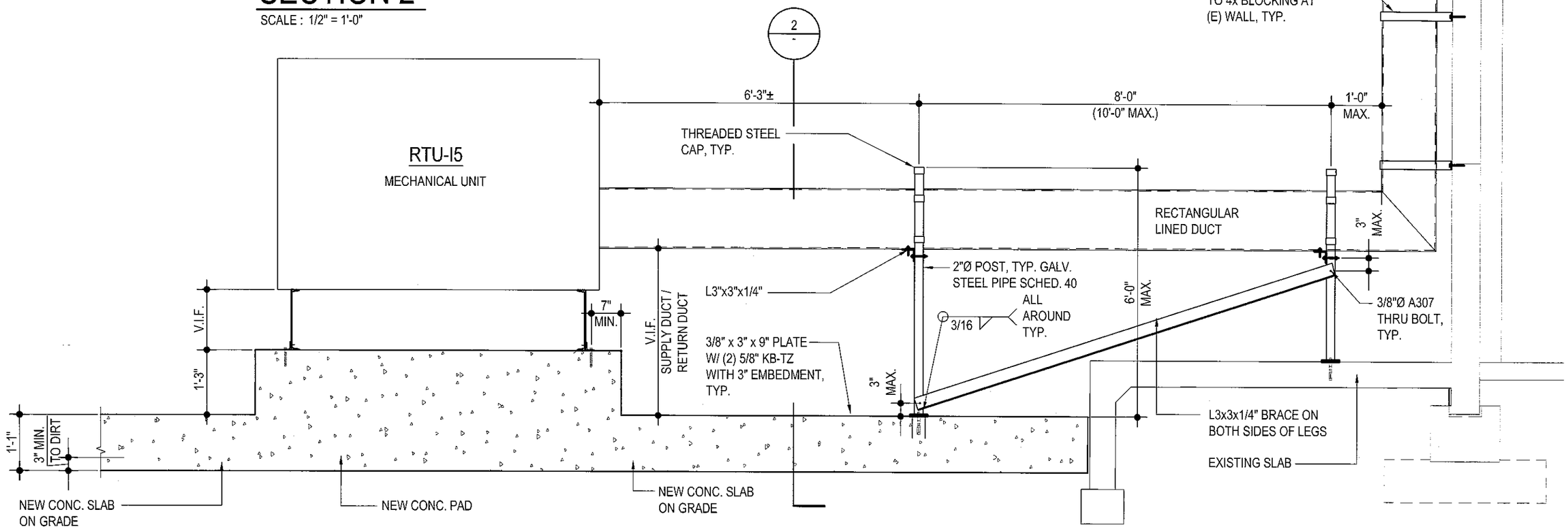

SECTION 1

SCALE : 1/2" = 1'-0"

FOR REFERENCE: Sample of duct bracing