

APPENDIX C – WCPSS PROVIDED STANDARD DETAILS

2026 Edition

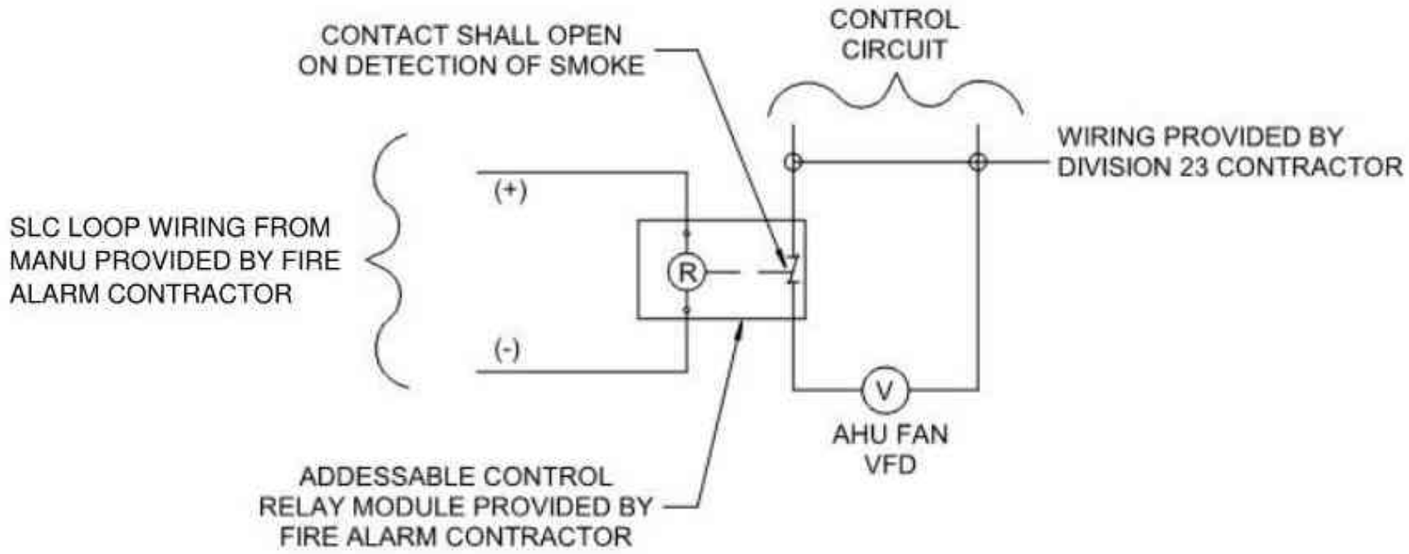

AHU SHUTDOWN DIAGRAM

FIRE ALARM INTERLOCK

The Fire Alarm Contractor shall provide a fire alarm relay for the supply fan(s) at each AHU. The relay shall be a be wired directly to the fan variable frequency drive for AHU shutdown by the BAS Contractor.

The relay shall also have an auxiliary contact. The BAS Contractor shall wire from the auxiliary contact to the BAS controller to monitor FA shutdown for that fan on the BAS front end.

For AHU relief fans, the scope shall be the same as for the supply fans. Relief fans do NOT require an auxiliary contact or BAS monitoring of FA shutdown status.

X0.00

SCALE: NONE

WAKE COUNTY PUBLIC SCHOOL SYSTEM
111 Corning Road,Suite 190
Cary, NC 27518
(919) 588-3608

S988 STRIKE AND RUB STRIP INSTRUCTIONS

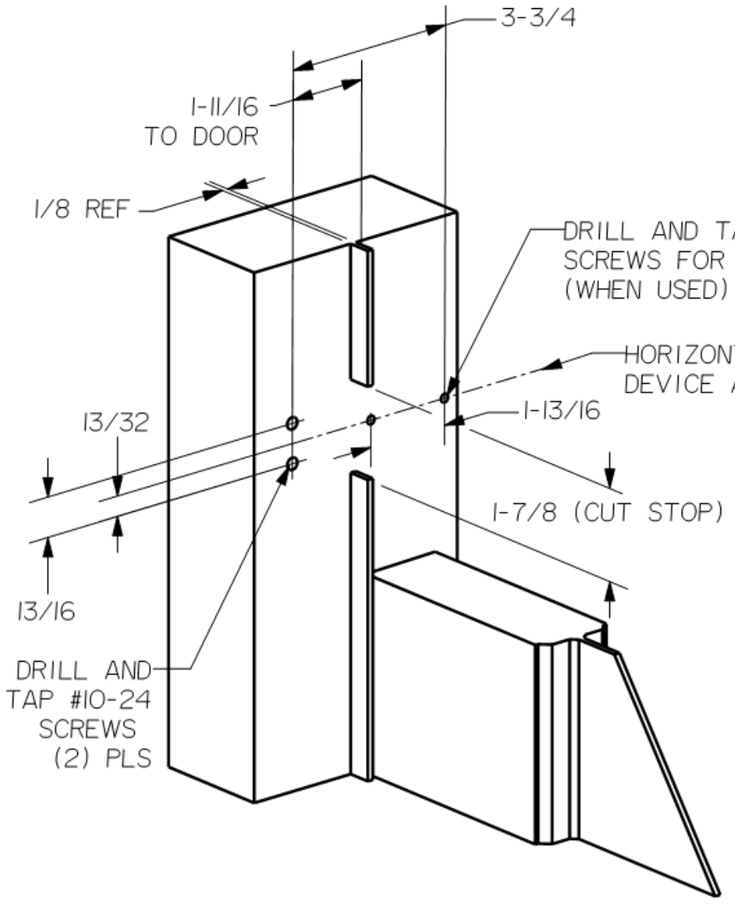

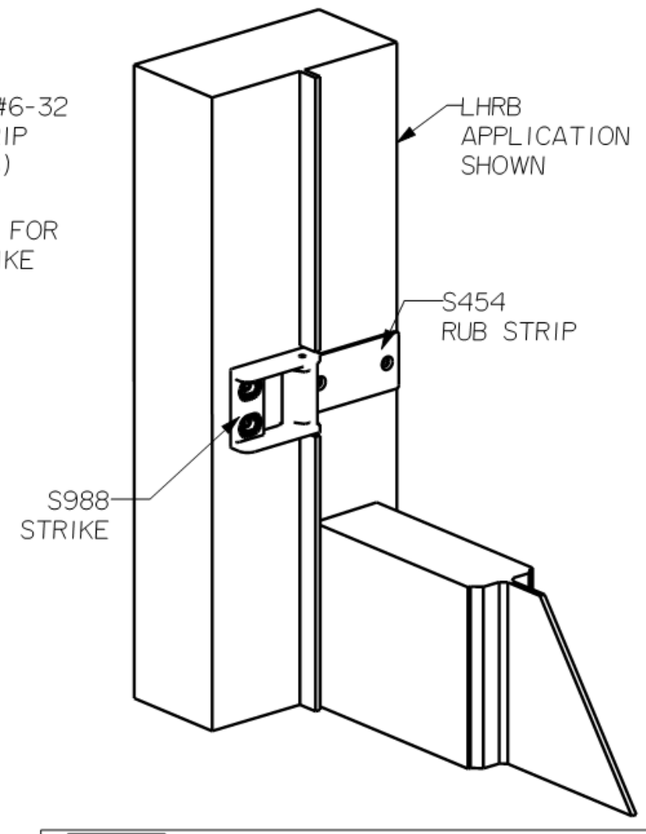

STANLEY

DRWG	DATE	REVISION
01795-11-000	4/15/03	A

phi

Precision Hardware
a Division of Stanley Security Solutions, Inc.
www.stanleysecuritysolutions.com

X0.00

SCALE: NONE

WAKE COUNTY PUBLIC SCHOOL SYSTEM
111 Corning Road,Suite 190
Cary, NC 27518
(919) 588-3608

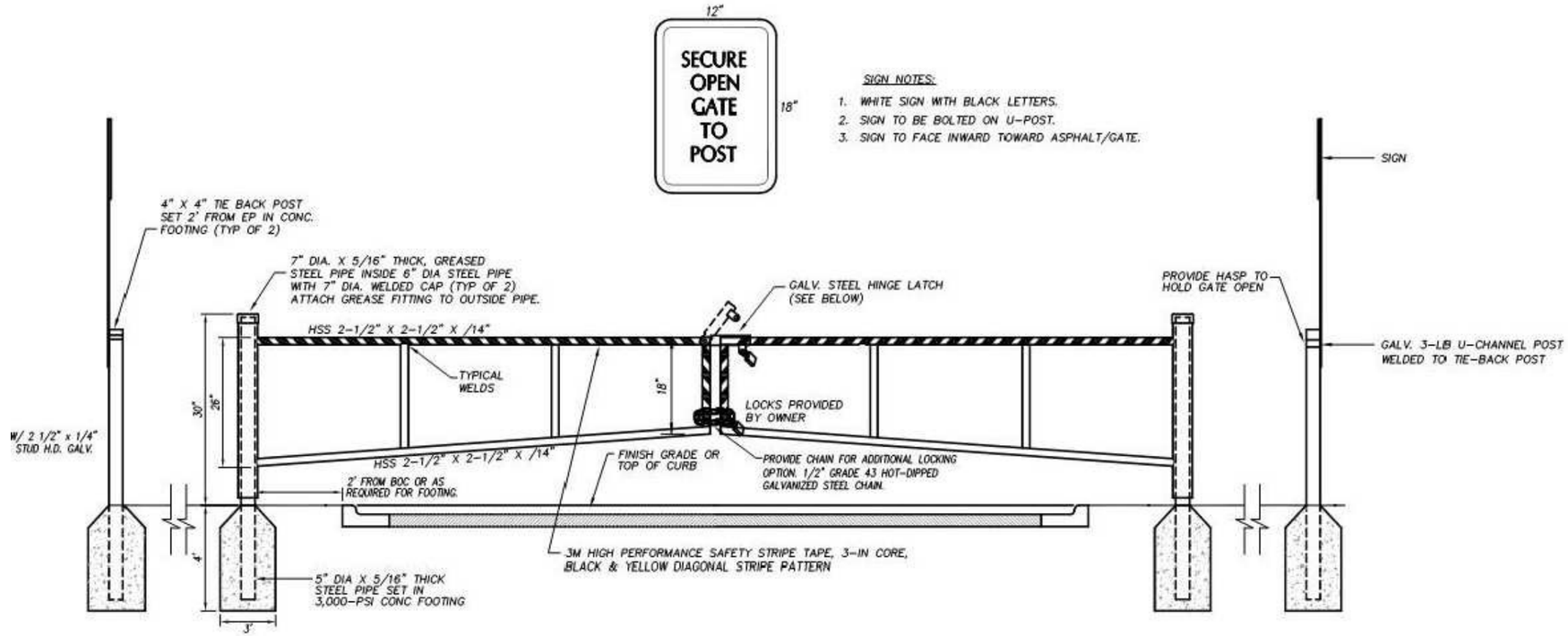

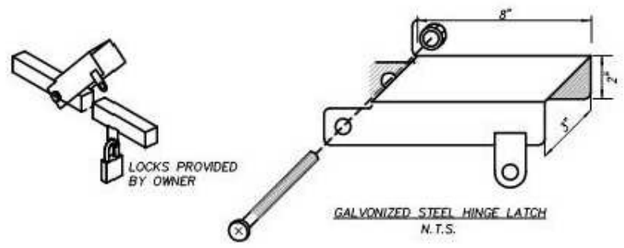

GALVONIZED STEEL HINGE LATCH
N.T.S.

PAINTING SPECIFICATIONS:

1. MANUFACTURER: TNEMEC COMPANY, INC.; CARY, NC (919-859-3737)
2. SYSTEM TYPE: EPOXY-POLYURETHANE
3. SURFACE PREPARATION: SSPV-SPI AND BRUSH OFF BLAST CLEAN
4. PRIMER: SERIES 27 (FIELD-COATED) TYPOXY OR 69 HI-BUILD EPOXOLINE
5. FINISH PAINT: SERIES 73 ENDURA-SHIELD, SEMI-GLOSS, COLOR = SAFETY YELLOW
6. CONTRACTOR TO COORDINATE WITH LOCAL FIRE MARSHAL TO DETERMINE IF KNOX BOX/KNOX LOCK IS REQUIRED. INSTALL AS DIRECTED.

NOTES:

1. ALL STEEL SHALL BE HOT-DIPPED GALVANIZED
2. SUBMIT SHOP DRAWING FOR REVIEW AND APPROVAL PRIOR TO FABRICATION AND ASSEMBLY.
3. ENSURE GATE LEAFS ARE PROPERLY SPACED SO LOCKING FLANGES ON HINGE LATCH ASSEMBLY ALIGN.
4. IT IS THE RESPONSIBILITY OF THE CONTRACTOR TO DETERMINE REQUIRED FENCE LENGTHS BASED ON EXISTING CONDITIONS.

X0.00

SCALE: NONE

WAKE COUNTY PUBLIC SCHOOL SYSTEM
111 Corning Road,Suite 190
Cary, NC 27518
(919) 588-3608

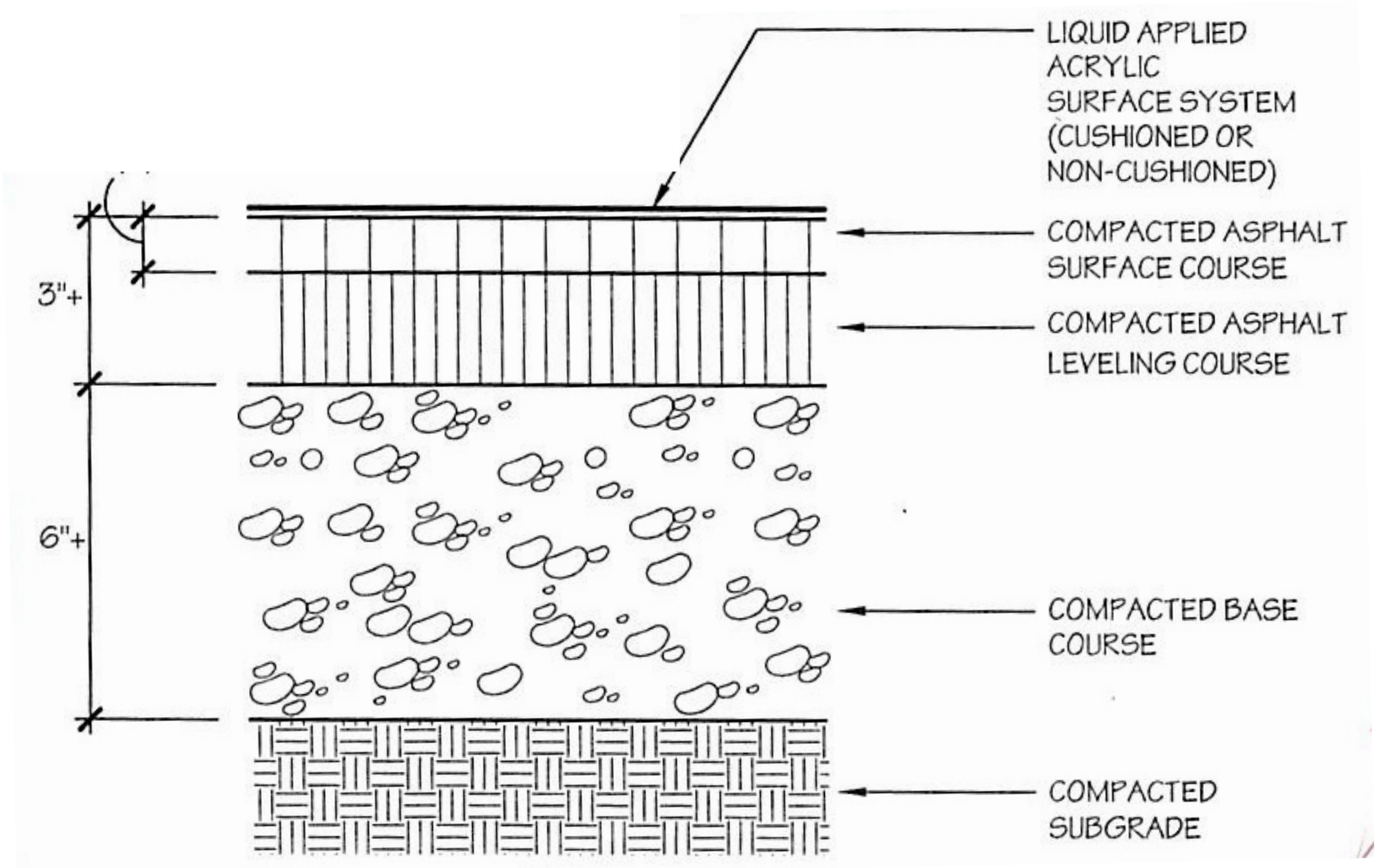

ASPHALT COURT FOR FREEZE/THAW CLIMATES

AXX.XX

TYPICAL ASPHALT COURT SECTIONS

SCALE: NONE

WAKE COUNTY PUBLIC SCHOOL SYSTEM
111 Corning Road,Suite 190
Cary, NC 27518
(919) 588-3608

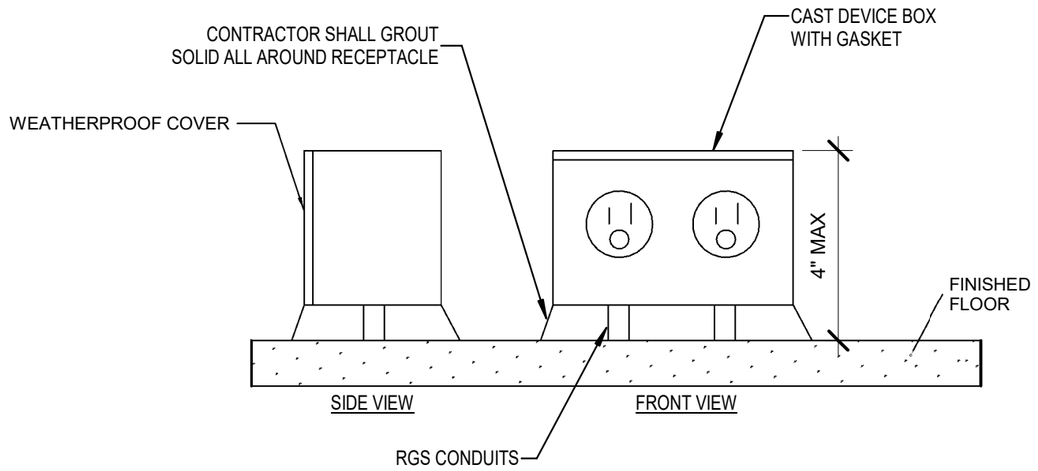

GENERAL NOTE:

A. THE ELECTRICAL CONTRACTOR SHALL PROVIDE ALL NECESSARY RECEPTACLES, SWITCHES, DISCONNECTS AND STARTERS ASSOCIATED WITH THE KITCHEN EQUIPMENT. PROVIDE ALL LINE AND LOAD SIDE WIRING AND MAKE FINAL CONNECTIONS TO THE EQUIPMENT. PROVIDE STAINLESS STEEL CONDUIT SLEEVES FOR ALL CONDUITS IN KITCHEN AND SERVING AREA THAT PENETRATE FLOOR SLAB.

TYPICAL KITCHEN CONNECTIONS

NOT TO SCALE

EXX.XX

SERVING LINE ELECTRICAL OUTLET JUNCTION BOX

SCALE: NONE

WAKE COUNTY PUBLIC SCHOOL SYSTEM
111 Corning Road,Suite 190
Cary, NC 27518
(919) 588-3608

WAKE COUNTY PUBLIC SCHOOL SYSTEM
111 Corning Road,Suite 190
Cary, NC 27518
(919) 588-3608

U.L. SYSTEM NO. WL1052
METAL PIPE THROUGH 1-HR. GYPSUM WALL
F RATING = 1-HR.
T RATING = 0-HR.

FRONT VIEW

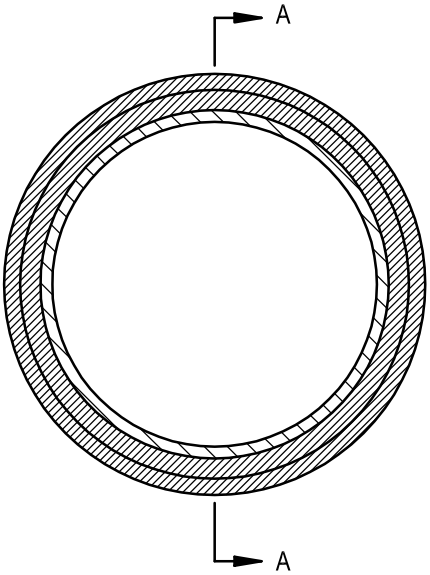

SECTION A-A

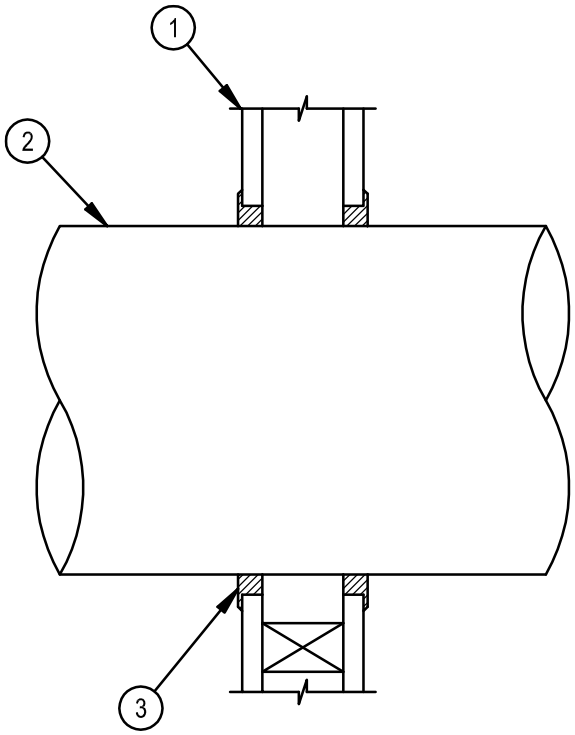

1. 1-HR. FIRE-RATED GYPSUM WALL ASSEMBLY.
2. 10" DIA. (OR SMALLER) STEEL PIPE, 4" DIA. (OR SMALLER) COPPER PIPE, EMT OR CONDUIT.
3. MIN. 5/8" DEPTH HILTI FS 601.

NOTE: NOMINAL ANNULAR SPACE OF 1/4" TO 1" REQUIRED

SEE HILTI FIRESTOP INSTALLATION MANUAL FOR ADDITIONAL INSTRUCTIONS
HILTI, INC. TULSA, OK 1-800-879-8000

P1.01

1-HR GYPSUM WALL U.L. DETAIL

SCALE: NONE

WAKE COUNTY PUBLIC SCHOOL SYSTEM
111 Corning Road,Suite 190
Cary, NC 27518
(919) 588-3608

U.L. SYSTEM NO. CAJ1149
METAL PIPE THROUGH CONCRETE FLOOR/WALL OR BLOCK WALL
F RATING = 2-HR.
T RATING = 0-HR.

TOP VIEW

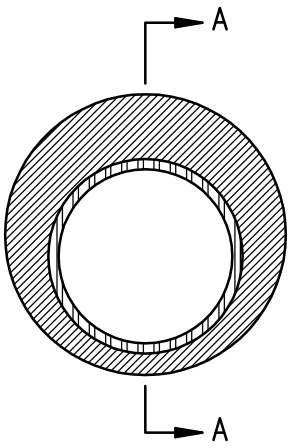

SECTION A-A

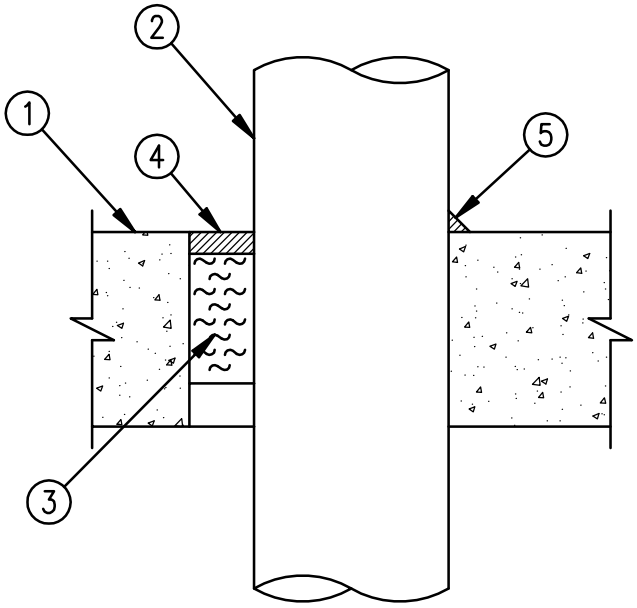

1. A. MIN. 4-1/2" THICK CONCRETE FLOOR.
   B. MIN. 4-1/2" THICK CONCRETE WALL.
   C. ANY U.L. CLASSIFIED CONCRETE BLOCK WALL.
2. 4" DIA. (OR SMALLER) STEEL PIPE, COPPER PIPE, EMT, OR CONDUIT.
3. MIN. 3" THICK MINERAL WOOL (MIN. 4 PCF DENSITY) TIGHTLY PACKED.
4. MIN. 1/2" DEPTH HILTI FS 601 FIRESTOP SEALANT.
5. 1/2" BEAD HILTI FS 601 FIRESTOP SEALANT.

NOTE:
1. MAXIMUM DIAMETER OF OPENING = 6".
2. ANNULAR SPACE = MIN. 0" (POINT CONTACT), MAX. 2".
3. WALLS REQUIRE 1/2" OF SEALANT FLUSH WITH BOTH SIDES.

SEE HILTI FIRESTOP INSTALLATION MANUAL FOR ADDITIONAL INSTRUCTIONS
HILTI, INC. TULSA, OK 1-800-879-8000

P1.02

2-HR CONCRETE WALL/FLR/ BLOCK WALL U.L. DETAIL

SCALE: NONE

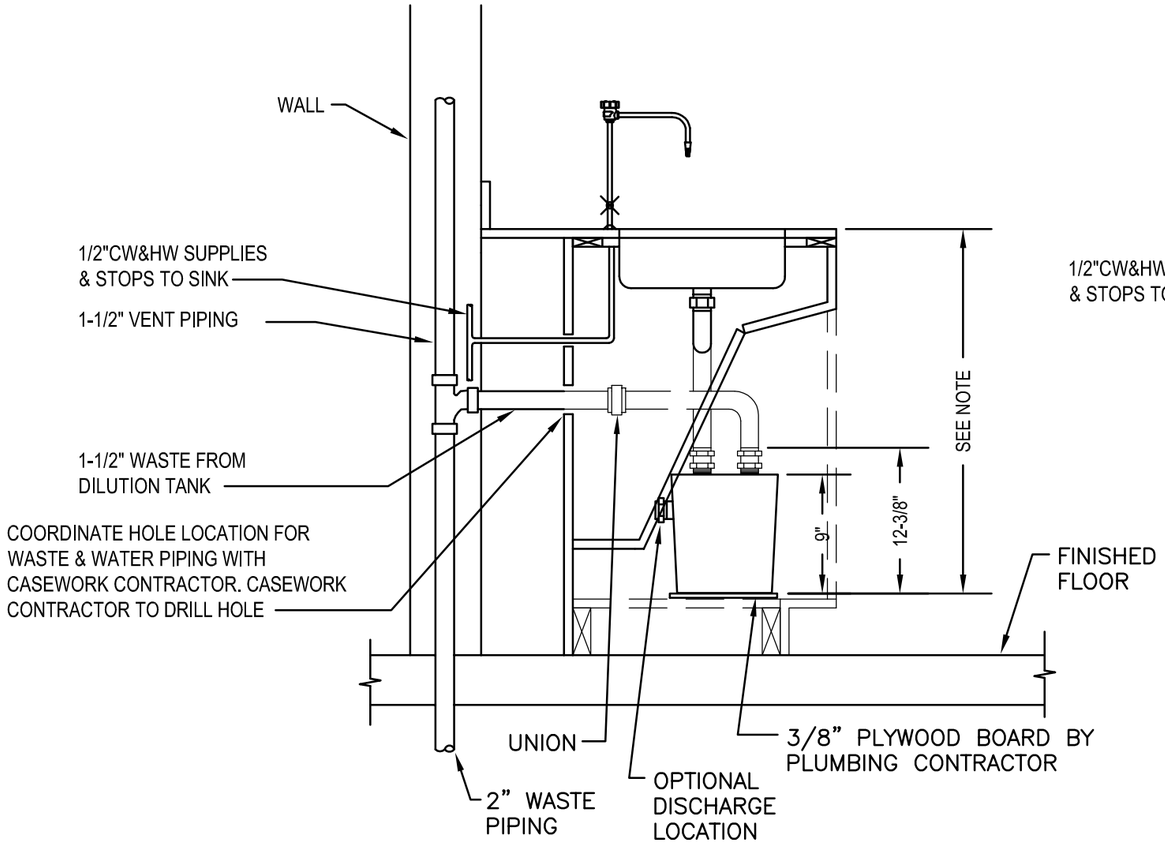

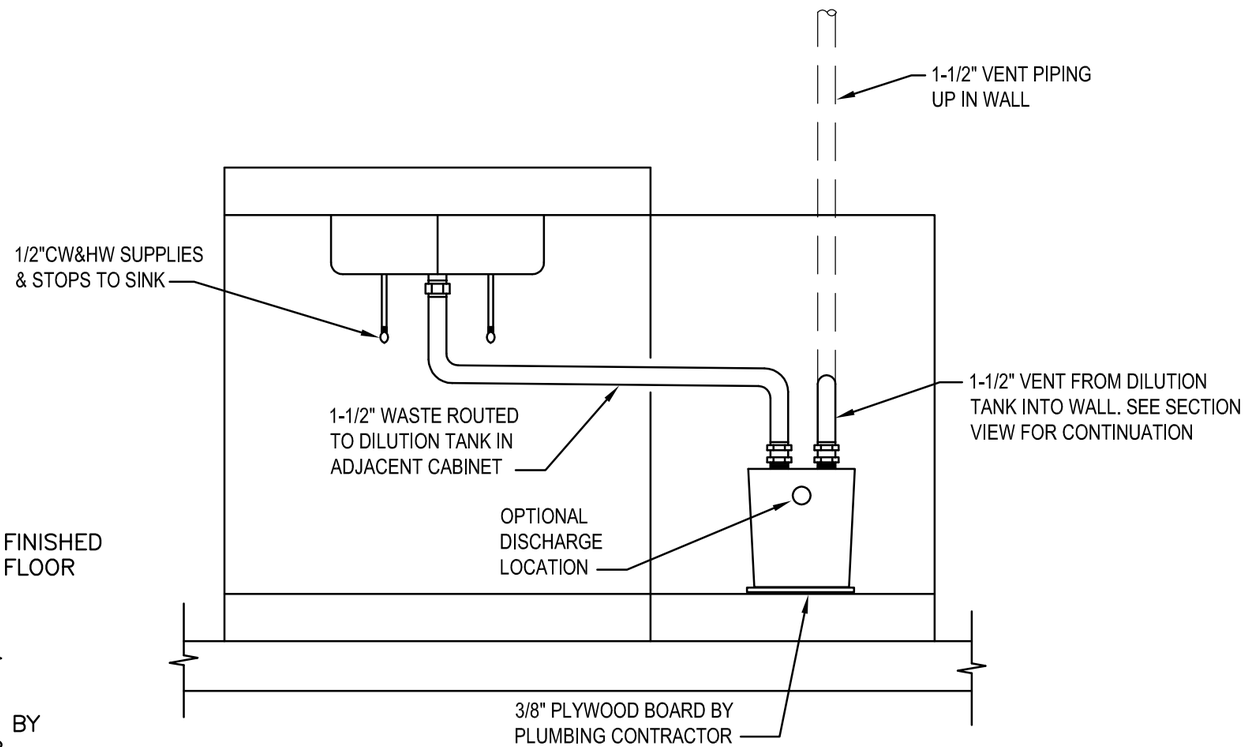

P1.03 ACID DILUTION TRAP INSTALLATION DETAIL

SCALE: NONE

WAKE COUNTY PUBLIC SCHOOL SYSTEM
111 Corning Road,Suite 190
Cary, NC 27518
(919) 588-3608

WAKE COUNTY PUBLIC SCHOOL SYSTEM
111 Corning Road,Suite 190
Cary, NC 27518
(919) 588-3608

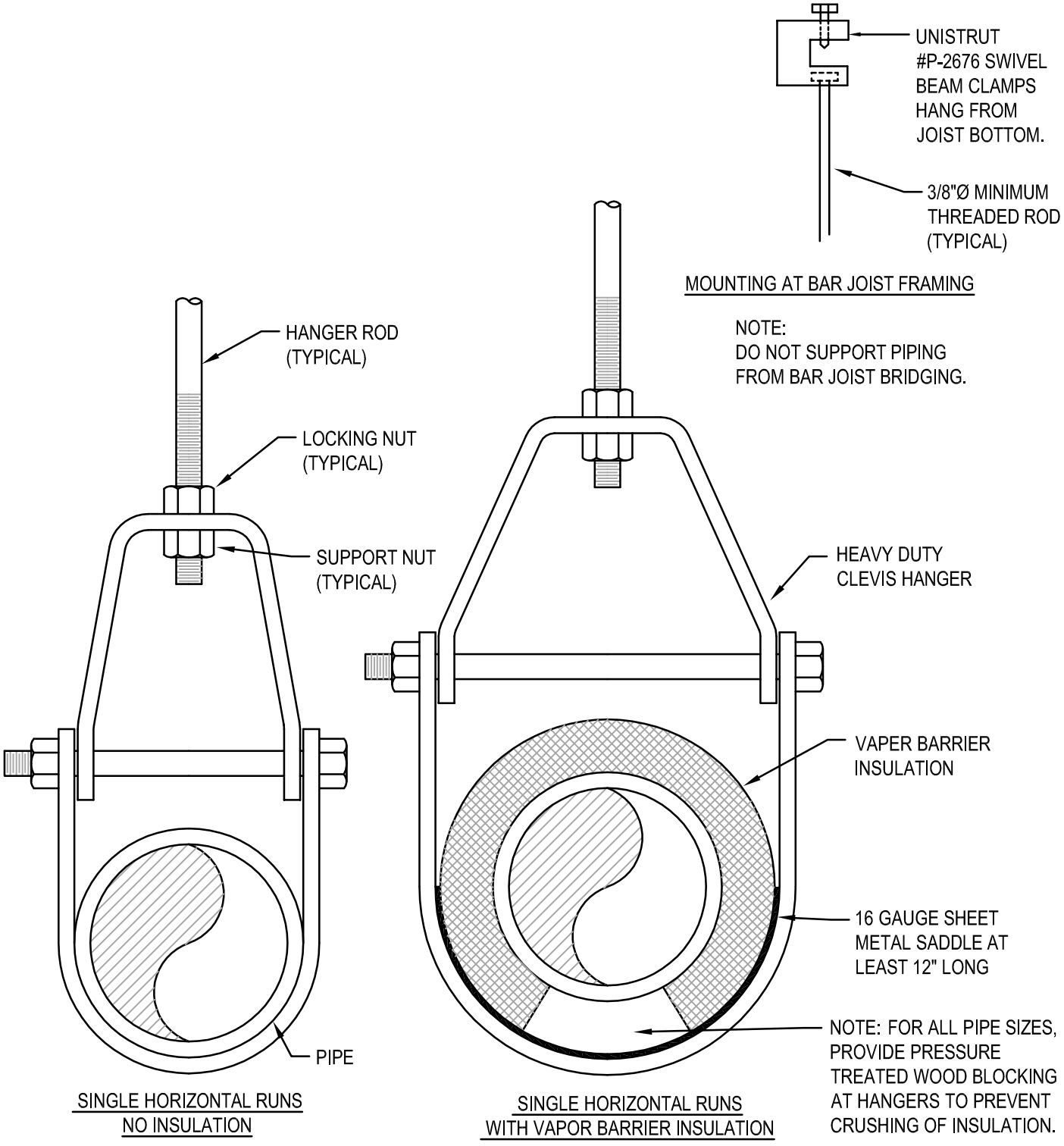

P1.04 CLEVIS HANGER SUPPORT DETAIL

SCALE: NONE

WAKE COUNTY PUBLIC SCHOOL SYSTEM
111 Corning Road,Suite 190
Cary, NC 27518
(919) 588-3608

HEAT TRACE SPECIFICATION:

HEAT-TRACING CABLES: 8 W/FT OUTPUT. SELF-REGULATING, ELECTRIC HEATING CABLES SUITABLE FOR FREEZE PROTECTION OF METAL PIPING. CABLES: PAIR OF PARALLEL NO. 16 AWG TINNED-COPPER BUS WIRES EMBEDDED IN CROSS-LINKED CONDUCTIVE POLYMER CORE, WHICH VARIES POWER OUTPUT IN RESPONSE TO TEMPERATURE ALONG ITS LENGTH. CABLE SHALL BE CAPABLE OF CROSSING OVER ITSELF WITHOUT OVERHEATING. HEAT OUTPUT: AT LEAST 90 PERCENT OF RATING OVER A TEMPERATURE RANGE FROM 40 TO 150 DEG F PIPE TEMPERATURE. CABLE COVER: FABRICATED OF CROSS-LINKED, MODIFIED, POLYOLEFIN DIELECTRIC JACKET; WITH ULTRAVIOLET INHIBITOR. PIPE THERMOSTAT: UNIT WITH ADJUSTABLE TEMPERATURE RANGE FROM 35 TO 50 DEG F SNAP ACTION; OPEN-ON-RISE, SINGLE-POLE SWITCH WITH 25-A RATING; AND REMOTE BULB FOR DIRECTLY SENSING PIPE-WALL TEMPERATURE.

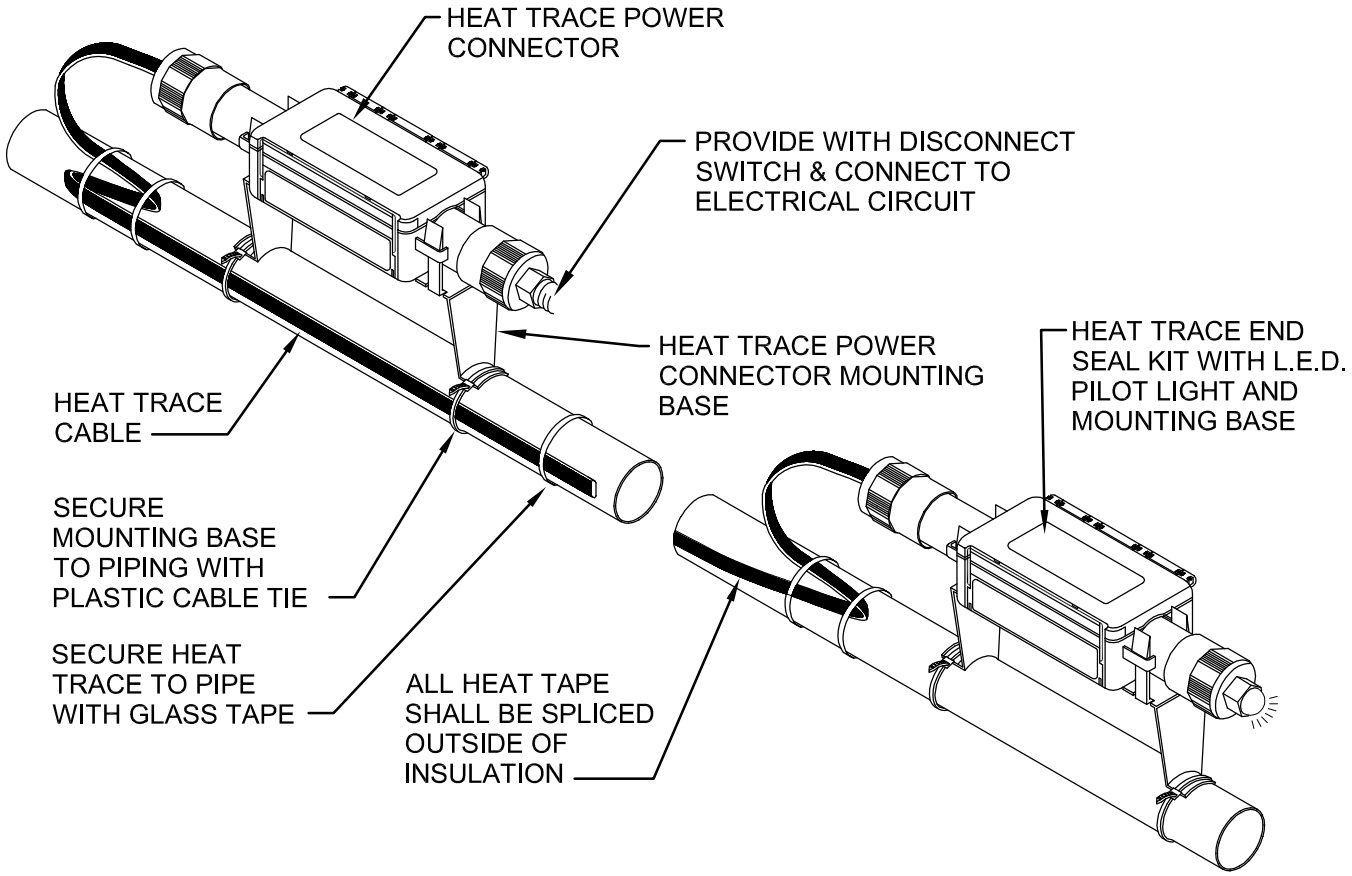

P1.05

HEAT TRACE CABLE INSTALLATION DETAIL

SCALE: NONE

WAKE COUNTY PUBLIC SCHOOL SYSTEM
111 Corning Road,Suite 190
Cary, NC 27518
(919) 588-3608

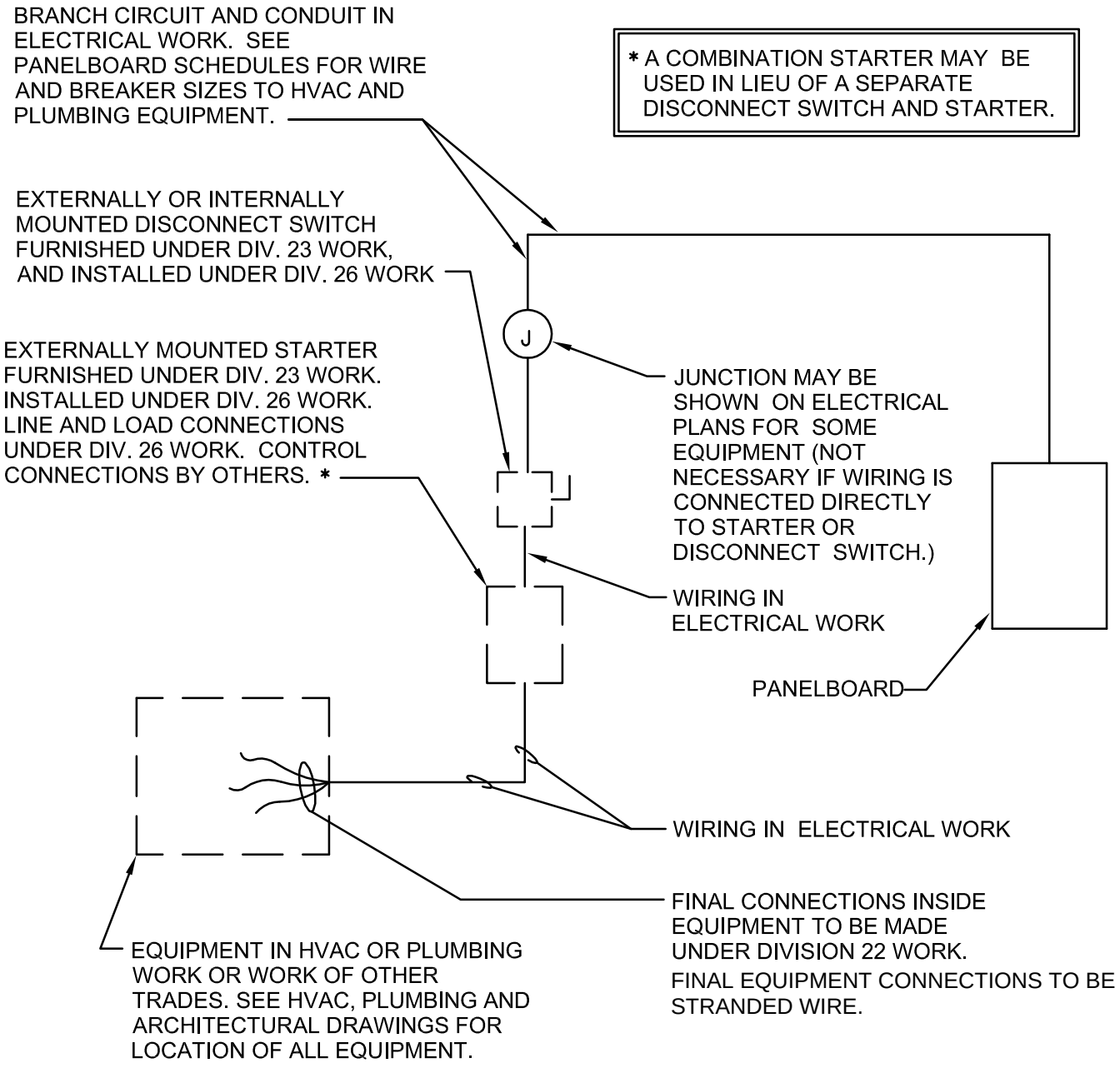

P1.06

PLUMBING EQUIPMENT ELECTRICAL CONNECTION DETAIL

SCALE: NONE

WAKE COUNTY PUBLIC SCHOOL SYSTEM
111 Corning Road,Suite 190
Cary, NC 27518
(919) 588-3608

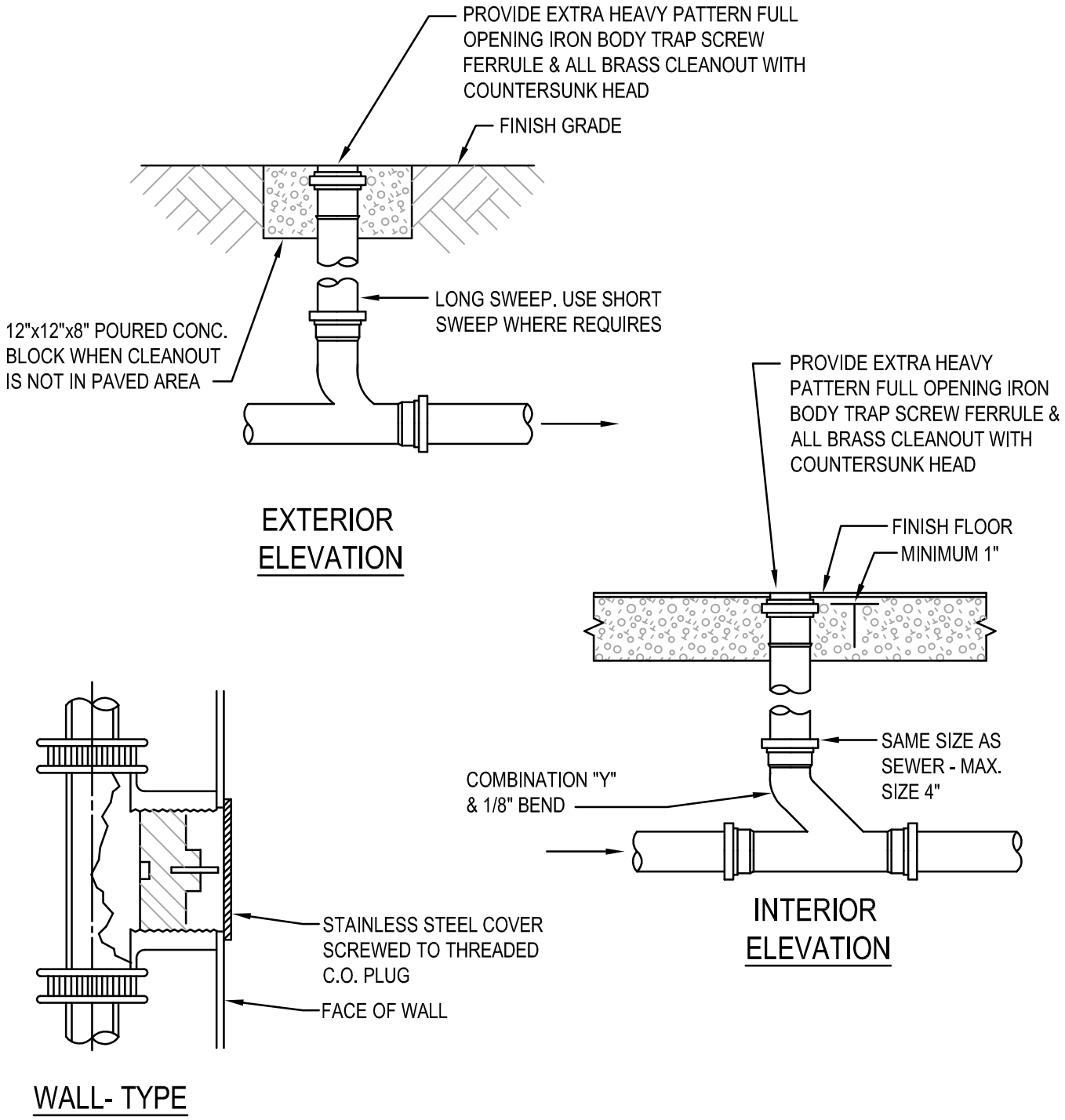

P1.07 TYPICAL CLEANOUT DETAIL

SCALE: NONE

WAKE COUNTY PUBLIC SCHOOL SYSTEM
111 Corning Road,Suite 190
Cary, NC 27518
(919) 588-3608

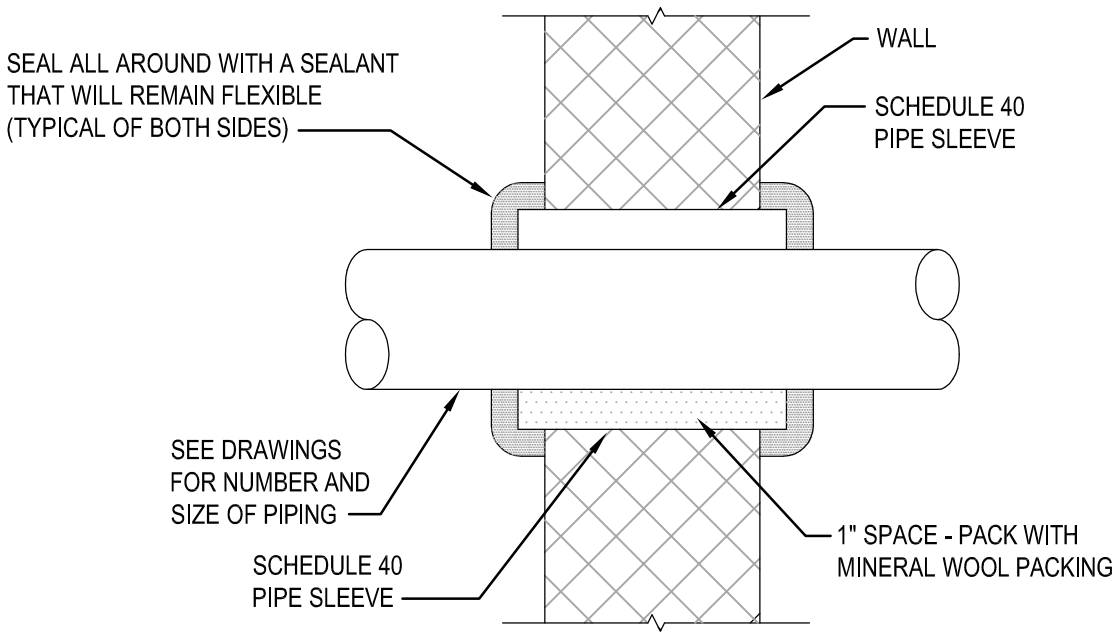

NOTES:

1. THE VOID BETWEEN FIBROUS PACKING AND SLEEVE SHALL BE FILLED WITH CAULKING MATERIAL.
2. SEE FLOOR PLANS FOR LOCATION OF ALL RATED WALLS.
3. CHROME ESCUTCHEONS TO BE PROVIDED FOR ALL EXPOSED PENETRATIONS.

P1.08

TYPICAL NON-RATED WALL PIPING SLEEVE DETAIL

SCALE: NONE

WAKE COUNTY PUBLIC SCHOOL SYSTEM
111 Corning Road,Suite 190
Cary, NC 27518
(919) 588-3608

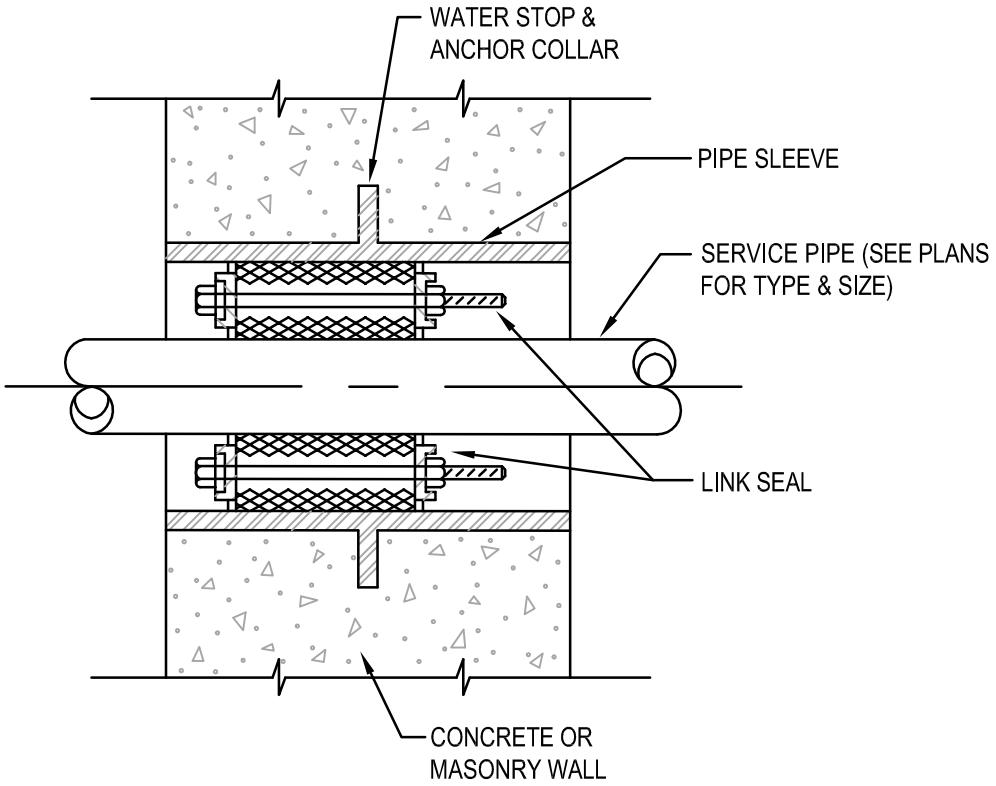

P1.09

TYPICAL UNDERGROUND PIPING SLEEVE DETAIL

SCALE: NONE

WAKE COUNTY PUBLIC SCHOOL SYSTEM
111 Corning Road,Suite 190
Cary, NC 27518
(919) 588-3608

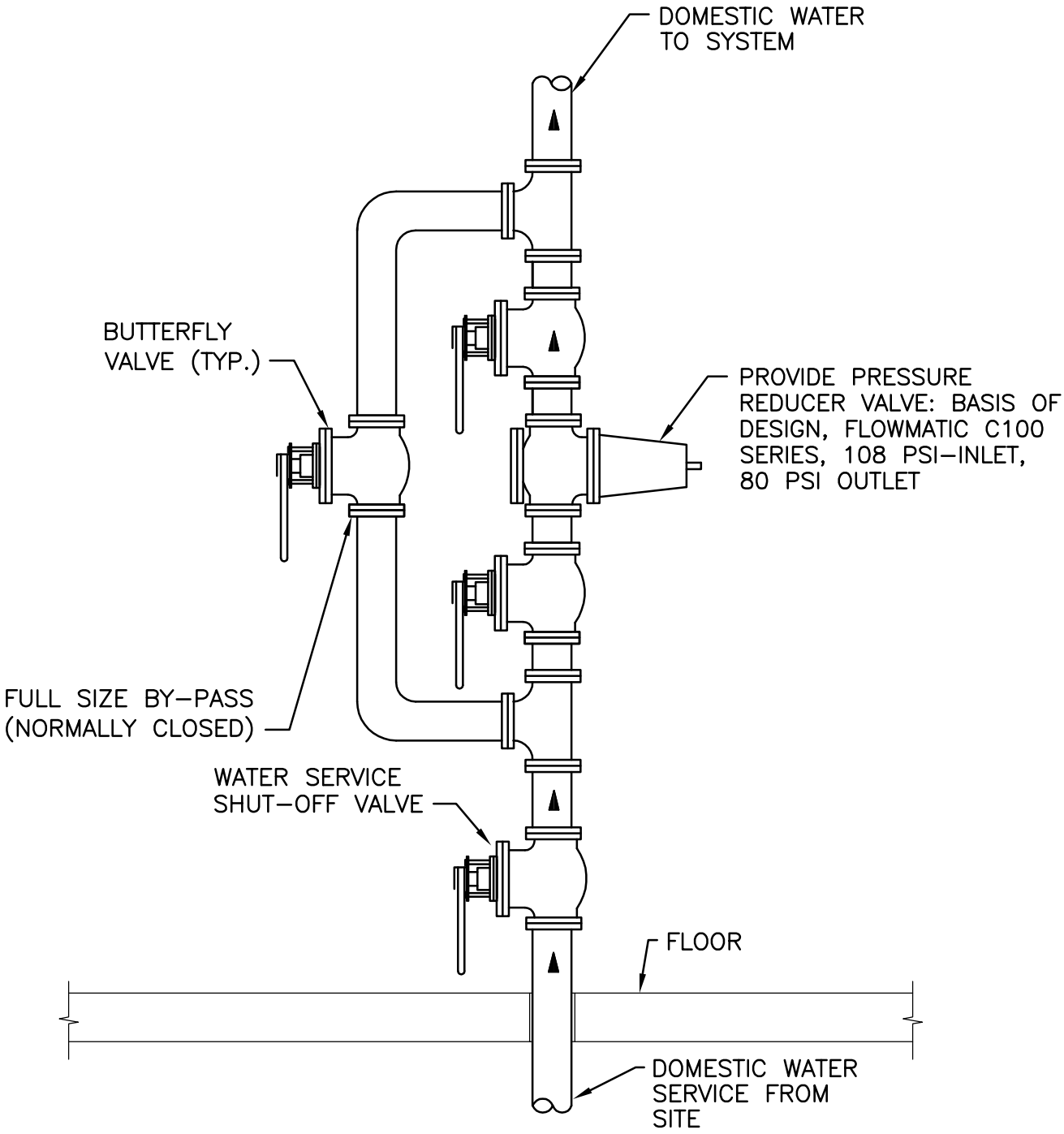

NOTES:
MIN. CLEARANCE ON EITHER SIDE OF PRV SHALL BE 18".
MIN . CLEARANCE IN FRONT SHALL BE 36"

P1.10

TYPICAL DOMESTIC WATER RISER DETAIL

SCALE: NONE

WAKE COUNTY PUBLIC SCHOOL SYSTEM
111 Corning Road,Suite 190
Cary, NC 27518
(919) 588-3608

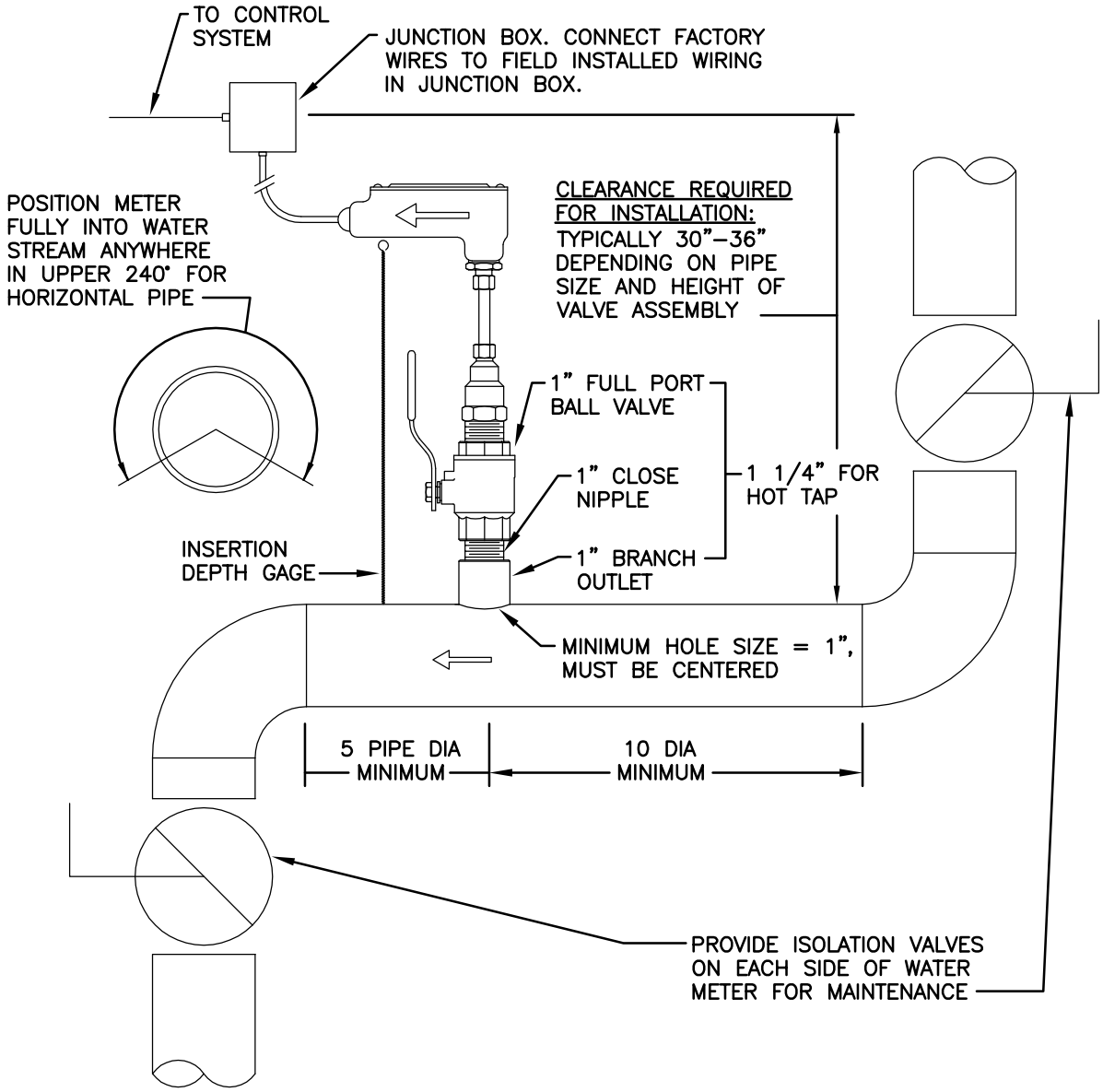

NOTE:

1. INSTALLATION KITS VARY BASED ON PIPE MATERIAL AND APPLICATION. FOR INSTALLATIONS IN PRESSURIZED SYSTEMS, USE "HOT TAP" 1 1/4" INSTALLATION KIT AND DRILL HOLE USING A 1" WET TAP DRILL.
2. METER IS ACCEPTABLE TO INSTALL IN VERTICAL PIPE
3. WATER METER SHALL BE ONICON, INC. MODEL F–1210, OR EQUAL. METER SHALL BE FURNISHED BY CONTROLS CONTRACTOR AND INSTALLED BY PLUMBING CONTRACTOR.
4. WATER METER SHALL BE INSTALLED IN AN ACCESSIBLE FASHION. CONTRACTOR SHALL MEET WITH ENGINEER AND INDICATE INSTALLATION LOCATION, PRIOR TO INSTALLING.

P1.11

TYPICAL BAS WATER METER INSTALLATION DETAIL

SCALE: NONE

DDC FUNCTION BLOCK LOGIC SYMBOLS

SYMBOL	DESCRIPTION
POINT NAME AO ADDRESS	OUTPUT POINT – TRANSMITS A VALUE FROM THE FB TO A PHYSICAL OUTPUT CHANNEL ON THE CONTROLLER. DESCRIPTOR – CONTROLLER ADDRESS, POINTNAME AND POINT TYPE AO – ANALOG OUTPUT DO – DIGITAL OUTPUT
ADDRESS AI POINT NAME	INPUT POINT – READS A VALUE FROM A PHYSICAL INPUT ON THE CONTROLLER AND CONVERTS FOR USE INSIDE THE FB. DESCRIPTOR – CONTROLLER ADDRESS, POINTNAME AND POINT TYPE AI – ANALOG INPUT DI – DIGITAL INPUT
POINT–NAME VP	VIRTUAL POINT – ANALOG OR DIGITAL VALUE USED WITHIN A FB OR BROADCAST ACROSS THE LAN.
	DIGITAL WIRE – DIGITAL LOGIC CONNECTION BETWEEN FB'S
	ANALOG WIRE – ANALOG LOGIC CONNECTION BETWEEN FB'S
CONST	CONSTANT – CONSTANT VALUE INPUTS
G VALUE DISPLAYED & EDITABLE ON GRAPHIC PAGE G VALUE DISPLAYED ON GRAPHIC PAGE A#	GRAPHIC INTERFACE – VALUE APPEARS ON GRAPHIC SCREEN. WHEN BLOCK PRECEEDS (IS TO THE LEFT OF) A CONSTANT BLOCK OR VERTUAL POINT BLOCK, THE VALUE SHALL BE EDITABLE FROM THE GRAPHIC SCREEN. ALARM & PRIORITY – TRANSMITS AN ALARM AND ALARM PRIORITY TO THE ENTERPRISE BUILDING MANAGEMENT SYSTEM (EBMS).
M#	MESSAGE AND NUMBER – TRANSMITS A MESSAGE AND MESSAGE NUMBER TO THE ENTERPRISE BUILDING MANAGEMENT SYSTEM (EBMS).
	TREND – ESTABLISHES TREND IN CONTROLLER.
RTM	RUN TIME MONITOR – ACCUMULATES RUNTIME FOR DIGITAL OUTPUT AND CONVERTS TIME TO HOURS.
REF#	REFERENCE FLAG – USED AS CONNECTION TO FB'S BY REFERENCE INSTEAD OF WIRES.
AND	DIGITAL AND GATE– OUTPUT IS ON IF ALL INPUTS ARE TRUE
OR	DIGITAL OR GATE – OUTPUT IS ON IF ANY INPUT IS TRUE.
XOR	DIGITAL EXCLUSIVE OR GATE – OUTPUT IS ON IF ONLY ONE INPUT IS TRUE.
N	INVERSE (NOT)– IF INPUT = ON, OUTPUT = OFF; CONVERSELY IF INPUT =OFF, OUTPUT =ON
RST LATCHO	LATCH OFF– OUTPUT IS OFF WHENEVER INPUT IS ON. OUTPUT REMAINS OFF UNTIL RESET CHANGES FROM OFF TO ON.
SET LATCHT	LATCH ON– OUTPUT IS ON WHENEVER INPUT IS ON. OUTPUT REMAINS ON UNTIL RESET CHANGES FROM OFF TO ON.
ON/OFF DELAY	ON/OFF DELAY TIMER– AFTER INPUT IS ON, OUTPUT IS ON/OFF AFTER A PREDETERMINED TIME (#) HAS ELAPSED.
CYCLE DELAY	CYCLE DELAY TIMER – WHEN SET TIME HAS ELAPSED, THE FIRST TIME INPUT IS ON, OUTPUT IS ON AND TIMER RESETS. BEFORE SET TIME HAS ELAPSED, OUTPUT IS OFF WHEN INPUT IS OFF. IF INPUT GOES FROM OFF TO ON BEFORE SET TIME HAS ELAPSED, OUTPUT WILL REMAIN OFF.
PWR	POWER FLAG – ON WHEN CONTROLLER IS INITIALLY POWERED ON AND NO PHASE LOSS IS DETECTED
S FF O	FLIP FLOP – CHANGE STATE OF OUTPUT WHEN INPUT CHANGES FROM OFF TO ON; OUTPUT SET TO OFF WHEN RESET (R) GOES CHANGES FROM OFF TO ON
OPTIMUM: DB HI / I O / INC LO	SETPOINT OPTIMIZATION – RESET OF OUTPUT FROM A MAXIMUM VALUE TO A MINIMUM VALUE BASED ON VALUES OR REQUESTS) DB – DEAD BAND INC – INCREMENT/DECREMENT VALUE HI – MAXIMUM RESET VALUE LO – MINIMUM RESET VALUE
SP: > +IE+OA; I: S & B; <: –IE–OA; INTVL; MX; O; MN	SAMPLE & BUMP – CHANGE IN OUTPUT (WITH DEFINED MINIMUM & MAXIMUM VALUES) BY A DEFINED AMOUNT WHEN INPUT DEVIATES FROM SETPOINT (SP) BY A DEFINED AMOUNT AT A DEFINED INTERVAL. I – INPUT O – OUTPUT MX – MAXIMUM OUTPUT MN – MINIMUM OUTPUT INTVL – INTERVAL > +IE, +OA – WHEN INPUT RISES ABOVE SETPOINT BY AMOUNT '+IE', OUTPUT IS INCREASED BY AMOUNT '+OA' < –IE, –OA – WHEN INPUT FALLS BELOW SETPOINT BY AMOUNT '–IE', OUTPUT IS REDUCED BY AMOUNT '–OA'

SYMBOL	DESCRIPTION
SP P I D DA O	PID CONTROLLER – PROPORTIONAL, INTEGRAL, DERIVATIVE LOOPS USE STANDARD ALGORITHMS TO CALCULATE AN OUTPUT BASED ON A VARIABLE INPUT. PROPORTIONAL IS BASED ON THE DIFFERENCE BETWEEN THE INPUT AND THE SETPOINT. INTEGRAL IS BASED ON THE THE TIME THE INPUT DEVIATES FROM THE SETPOINT. DERIVATIVE IS BASED ON THE THE RATE THE INPUT IS APPROACHING THE SETPOINT. THE PID CAN BE EITHER DIRECT ACTING (DA) OR REVERSE ACTING (RA). IN A DA PID WHEN THE INPUT INCREASES THE OUTPUT INCREASES. IN A RA PID WHEN THE INPUT INCREASES THE OUTPUT DECREASES. OPTIONALLY, AN ADDITIONAL DIGITAL TRIGGER MAY BE ASSIGNED TO THE INPUT SECTION THAT WILL ENABLE/DISABLE CALCULATION OF THE PID LOOP.
SP I O DA	FLOATING CONTROLLER – OUTPUT WILL INCREASE OR DECREASE INCREMENTALLY AS INPUT DEVIATES FROM SETPOINT. IN A DA CONTROLLER WHEN THE INPUT INCREASES THE OUTPUT INCREASES. IN A RA CONTROLLER WHEN THE INPUT INCREASES THE OUTPUT DECREASES.
RESET 100 I 0 100 100 O 0	RESET CONTROLLER – USER DEFINED OUTPUT VALUE WILL RESET IN A LINEAR RELATIONSHIP BASED ON USER DEFINED INPUT VALUE.
OFF SR ON	SWITCHING RELAY – SWITCHES OUTPUT BETWEEN TWO INPUTS WHEN DIGITAL PILOT INPUT IS ON. SWITCH SHOWN IN NORMAL POSITION
OFF DSR ON SP2 SP1	DEADBAND SWITCHING RELAY – DIGITAL OUTPUT CHANGES WHEN INPUT VALUE RISES/FALLS ABOVE/BELOW SETPOINT 1 (SP1). DIGITAL OUTPUT RESTORES TO NORMAL WHEN INPUT RISES/FALLS ABOVE/BELOW SETPOINT 2 (SP2). SWITCH SHOWN IN NORMAL POSITION
I IF > SP O	LOGICAL IF EXPRESSION – THE OUTPUT IS ON IF THE INPUT MEETS THE CONDITION OF THE SETPOINT.
RAMP CHNG% MAX I O # Sec MIN	RAMP CONTROLLER – LIMITS THE RATE OF CHANGE OF AN OUTPUT ON AN INCREASE IN VALUE OR A DECREASE IN VALUE. CHNG% – % OF TOTAL MAXIMUM OUTPUT VALUE ALLOWED FOR OUTPUT CHANGE # # = TIME IN SECONDS MAX = MAXIMUM OUTPUT VALUE MIN = MINIMUM OUTPUT VALUE
TMR I O DUR	TIMER – OUTPUT IS ON FOR A USER SPECIFIED TIME AFTER INPUT CHANGES FROM OFF TO ON
ATS I O OVRD TIME	AUTOMATIC TIME SCHEDULER – INCLUDES SCHEDULES ENTERED INTO CONTROLLER FOR 7 DAY SCHEDULING WITH HOLIDAYS AND OVERRIDE SCHEDULES. INCLUDES OVERRIDE INPUT FOR UNSCHEDULED OVERRIDE. OUTPUTS REFERENCE FLAGS CAN INCLUDE : HEATING SETBACK, COOLING SETBACK, AND UNOCCUPIED
OS/S I O OVRD TIME	OPTIMUM START/STOP TIME SCHEDULER – INCLUDES SCHEDULES ENTERED INTO CONTROLLER FOR 7 DAY SCHEDULING WITH HOLIDAYS AND OVERRIDE SCHEDULES. INCLUDES OPTIMUM START STOP ROUTINE. OUTPUTS REFERENCE FLAGS CAN INCLUDE : WARM–UP, COOL–DOWN, HEATING SETBACK, COOLING SETBACK, AND UNOCCUPIED. INCLUDES OVERRIDE INPUT (OVR) FOR UNSCHEDULED OVERRIDE
I CALC O	CALCULATION BLOCK – OUTPUT IS EQUAL TO CALCULATION USING INPUT(S). EQUATION CAN BE MATHEMATICAL OR A PREDEFINED INDUSTRY STANDARD ALGORITHM (ie. CFM, VELOCITY PRESSURE, ENTHALPY, DEW POINT ETC.)
H I	HIGH SELECTOR – SELECTS HIGHER OF INPUT VALUES
L O	LOW SELECTOR – SELECTS LOWER OF INPUT VALUES
AVE	AVERAGING BLOCK – MATHEMATICALLY AVERAGES INPUT VALUES.
DLY PROOF RST MTR ALM COM NML	PROOFING MODULE – GENERATES VALUES BASED ON A COMPARISON OF COMMAND AND MONITORING INPUTS. DLY – PROOFING DELAY PERIOD MTR – MONITOR (INPUT FOR PROOF) COM – COMMAND (INPUT FOR PROOF) RST – RESET (IF LATCHING IS USED) ALM – (ON WHEN MONITOR INPUT IS NOT EQUAL TO COMMAND INPUT) NML – OUTPUT IS ON WHEN MONITOR AND COMMAND INPUTS ARE ON AND NORMAL CONDITIONS ARE MET
	TIME AVERAGE BLOCK – OUTPUT IS EQUAL TO SUM OF INPUTS FROM USER SPECIFIED PREVIOUS TIME PERIOD (OR NUMBER OF SCANS) TO CURRENT TIME (OR SCAN) DIVIDED BY NUMBER OF DISCRETE POINTS IN THE SUMMATION PERIOD. OUTPUT IS A ROLLING TIME BASED AVERAGE OF THE INPUT VALUE.
REQUEST: ALG BLK CLK BLK; A B C D; ROTATE	STAGER BLOCK – OUTPUT IS EQUAL TO SUM OF REQUESTS FROM USER SPECIFIED INPUTS. ROTATION SHALL BE DETERMINED BY USER DEFINED PARAMETERS. EACH INDIVIDUAL OUTPUT CAN BE LOCKED OUT BY USER DEFINED INDIVIDUAL INPUTS. LOCKED OUT OUTPUTS SHALL BE SKIPPED IN ROTATION. (SEE SEQUENCE OF OPERATION FOR DETAILS)
PWR SWAP FALA FALB; ACK OUTA OUTB; LEAD/STANDBY	LEAD/STANDBY BLOCK – ON RUN COMMAND, LEAD OUTPUT IS SELECTED. LEAD OUTPUT CAN BE SWAPPED MANUALLY OR BY A TIME SCHEDULE. WHEN THE LEAD EQUIPMENT FAILS, THE STANDBY OUTPUT IS SELECTED. (SEE SEQUENCE OF OPERATION FOR DETAILS)

LEGEND	
TUBING DESIGNATIONS	
—— – ——	TUBING
WIRING DESIGNATIONS	
— · — · —	WIRING

CONTROL SYMBOLS

SYMBOL	DESCRIPTION	SYMBOL	DESCRIPTION
AI POINT NAME POINT NAME AO	DDC POINT DESCRIPTOR WITH NAME AI – ANALOG INPUT DI – DIGITAL INPUT AO – ANALOG OUTPUT DO – DIGITAL OUTPUT		DISCONNECT SWITCH
TS1	TEMPERATURE SENSOR WITH AVERAGING ELEMENT	480V 120V	CONTROL TRANSFORMER
TS1	TEMPERATURE SENSOR WITH SINGLE POINT ELEMENT	M S SP	RELAY COILS
TS1	TEMPERATURE SENSOR WITH PIPE WELL		FUSE
TS1	SPACE TEMPERATURE SENSOR	OL	THERMAL OVERLOAD
HS1	HUMIDITY SENSOR		NORMALLY OPEN AND NORMALLY CLOSED CONTACTS
	CURRENT SENSOR	HAND AUTO OFF	HAND–OFF–AUTO SELECTOR SWITCH
SD1	SMOKE DETECTOR		WIRING DESIGNATION. (NO. OF HATCHES INDICATES NO. OF CONDUCTORS)
DPS2	DIFFERENTIAL PRESSURE SWITCH		WIRING CONNECTION
FS1	WATER FLOW SWITCH	ON–OFF	ON–OFF SELECTOR SWITCH
V1 N.C.	TWO WAY CONTROL VALVE	V2 C. N.C. N.O.	THREE WAY CONTROL VALVE
	DAMPER ACTUATOR	LS1	LIMIT SWITCH
DPT1 0–5" w.c.	AIR DIFFERENTIAL PRESSURE TRANSMITTER (0 – 5" RANGE)	D–1	CONTROL DAMPER
VSD	VARIABLE SPEED DRIVE	DP	HYDRONIC DIFFERENTIAL PRESSURE TRANSMITTER
FZ1	FREEZESTAT	FM1	HYDRONIC FLOWMETER
AFMS1	AIRFLOW MEASURING STATION	TS1	THERMOSTAT
AFMS1	FAN INLET AIRFLOW MEASURING STATION		

ABBREVIATIONS

ALM	ALARM	NC	NORMALLY CLOSED
AH	AIR HANDLER	NO	NORMALLY OPEN
BLDG	BUILDING	OA	OUTSIDE AIR
C	COMMON	OVRD	OVERRIDE
CL	COOL	RA	RETURN AIR
CHPS	CHILLED WATER PUMP, SECONDARY	REQ	REQUEST
CHWP	CHILLED WATER PUMP	RF	RETURN FAN
CHWR	CHILLED WATER RETURN	RLF	RELIEF FAN
CHWS	CHILLED WATER SUPPLY	S/S	START / STOP
COV	CHANGE OF VALUE	SA	SUPPLY AIR
CW	CONDENSER WATER	SD	SMOKE DETECTOR
CWP	CONDENSER WATER PUMP	SEC	SECONDARY OR SECONDS
CWR	CONDENSER WATER RETURN	SF	SUPPLY FAN
CWS	CONDENSER WATER SUPPLY	SCHWR	SECONDARY CHILLED WATER RETURN
DD	DOWN–DUCT	SCHWS	SECONDARY CHILLED WATER SUPPLY
DP	DIFFERENTIAL PRESSURE	SHWR	SECONDARY HOT WATER RETURN
EF	EXHAUST FAN	SHWS	SECONDARY HOT WATER SUPPLY
FBK	FEEDBACK	T	TEMPERATURE
FC	FAN COIL	TB	TERMINAL BOX
HOA	HAND – OFF – AUTOMATIC	TW	TEMPERED WATER
HT	HEAT	TWP	TEMPERED WATER PUMP
HWP	HOT WATER PUMP	TWR	TEMPERED WATER RETURN
HWPS	HOT WATER PUMP, SECONDARY	TWS	TEMPERED WATER SUPPLY
HWR	HOT WATER RETURN	VP	VELOCITY PRESSURE
HWS	HOT WATER SUPPLY	VSD	VARIABLE SPEED DRIVE
ISO	ISOLATION		
MA	MIXED AIR		

WAKE COUNTY PUBLIC SCHOOL SYSTEM
111 Corning Road,Suite 190
Cary, NC 27518
(919) 588-3608

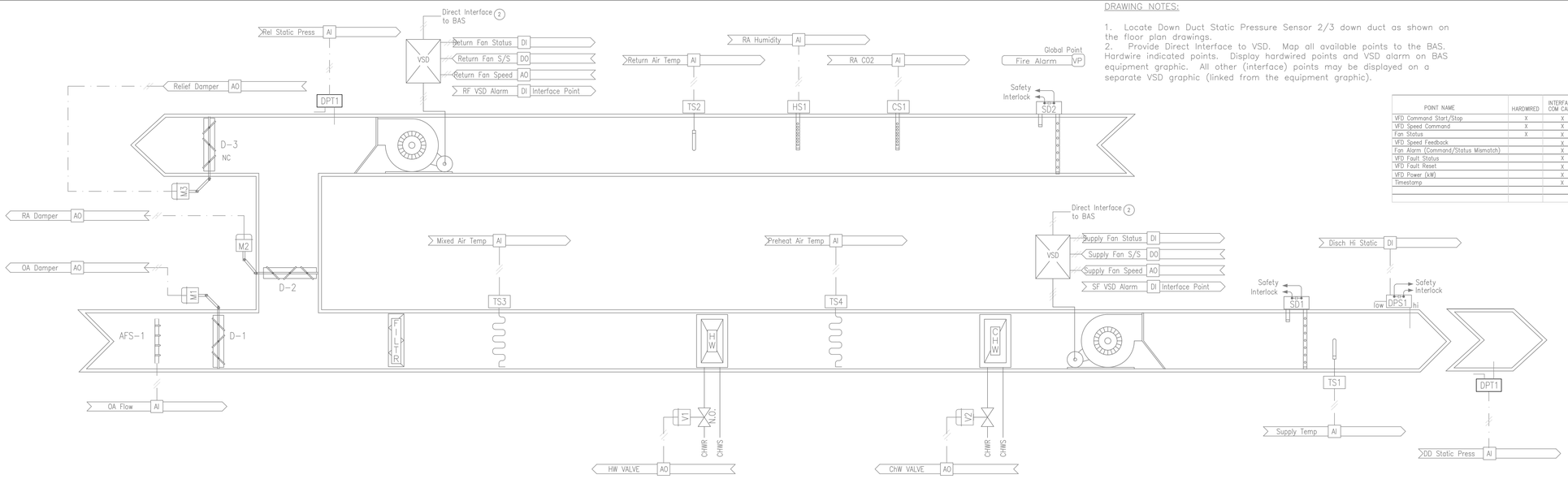

DRAWING NOTES:

1. Locate Down Duct Static Pressure Sensor 2/3 down duct as shown on the floor plan drawings.
2. Provide Direct Interface to VSD. Map all available points to the BAS. Hardwire indicated points. Display hardwired points and VSD alarm on BAS equipment graphic. All other (interface) points may be displayed on a separate VSD graphic (linked from the equipment graphic).

POINT NAME	HARDWIRED	INTERFACE COM CARD	GUI DISPLAY
VFD Command Start/Stop	X	X	HARDWIRED
VFD Speed Command	X	X	HARDWIRED
Fan Status	X	X	HARDWIRED
VFD Speed Feedback		X	COM
Fan Alarm (Command/Status Mismatch)		X	COM
VFD Fault Status		X	COM
VFD Fault Reset		X	COM
VFD Power (kW)		X	COM
Timestamp		X	COM

POINTS LIST

POINT DESCRIPTOR	POINT TYPE DI	AI	DO	AO	VP	TREND	ALARM	ALARM CONDITION	REMARKS
Supply Fan S/S			•			COV			
Supply Fan Status	•					COV			
SF VSD Alarm	•					COV	•	NOT EQUAL TO COMMAND	Interface Point
Supply Fan Speed				•		COV			
Return Fan S/S			•			COV			
Return Fan Status	•					COV			
RF VSD Alarm	•					COV	•	NOT EQUAL TO COMMAND	Interface Point
Return Fan Speed				•		COV			
DD Static Press		•				15 MIN			
Supply Temp		•				15 MIN			
Fire Alarm					•	COV			Global Point
Disch Hi Static	•					COV	•	ABOVE HIGH LIMIT SETPOINT	
PH Coil DAT		•				15 MIN			
Mixed Air Temp		•				15 MIN	•	BELOW FREEZESTAT SETPOINT	
Return Air Temp		•				15 MIN			
RA Humidity		•				15 MIN			
RA CO2		•				15 MIN	•	ABOVE MAX SETPOINT	
CHW Valve				•		COV			
HW Valve				•		COV			
Rel Static Press		•				15 MIN			
Relief Damper				•		COV			
OA/RA Damper				•		COV			
OA Flow		•				15 MIN			

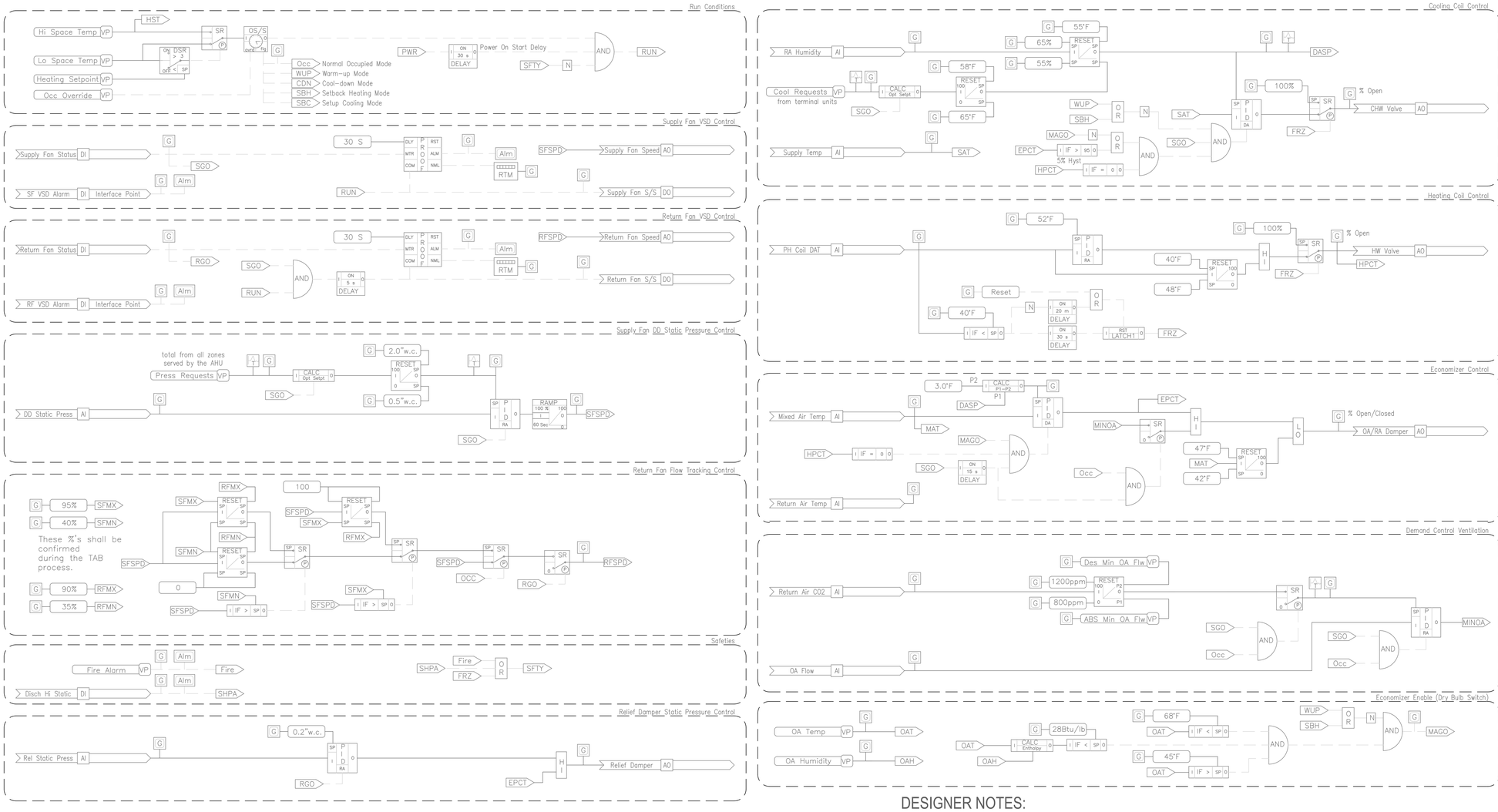

LOGIC VARIABLES

BINARY	ANALOG	DESCRIPTION
Occ		ON WHEN OCCUPIED MODE ACTIVE
RUN		ON WHEN UNIT COMMANDED TO START
SGO		ON WHEN SUPPLY FAN ENERGIZED AND STATUS PROVEN
RGO		ON WHEN RETURN FAN ENERGIZED AND STATUS PROVEN
MAGO		ON WHEN CONDITIONS ALLOW ECONOMIZER CONTROL
SHPA		ON WHEN THE SUPPLY HI PRESSURE ALARM IS ACTIVE
FRZ		ON WHEN A FREEZE CONDITION IS ACTIVE AND IN ALARM
Fire		ON WHEN FIRE ALARM IS ACTIVE
SFTY		ON WHEN A UNIT SHUTDOWN ALARM IS ON
	HST	VARIABLE CALCULATED VALUE OF HIGHEST SPACE TEMPERATURE
	OAT	VARIABLE VALUE OF OUTSIDE AIR TEMPERATURE
	SAT	VARIABLE VALUE OF SUPPLY AIR TEMPERATURE
	PHT	VARIABLE VALUE OF PREHEAT AIR TEMPERATURE
	MAT	VARIABLE VALUE OF MIXED AIR TEMPERATURE
	MINOA	VARIABLE VALUE OF MIN OA DAMPER POSITION (BASED ON OA FLOW PID OUT)
	DASP	VARIABLE CALCULATED VALUE OF DISCHARGE TEMPERATURE SETPOINT
	HPCT	VARIABLE CALCULATED VALUE OF HW VALVE POSITION
	EPCT	VARIABLE CALCULATED VALUE OF ECONOMIZER PID OUTPUT
	SFSPD	VARIABLE CALCULATED VALUE OF SUPPLY FAN SPEED OUTPUT
	SFMIN	SPEED THE SUPPLY FAN RUNS WHEN ALL TUs AT MIN (DETERMINED BY TAB)
	SFMAX	SPEED THE SUPPLY FAN RUNS WHEN ALL TUs AT MAX (DETERMINED BY TAB)
	RFMIN	SPEED THE RETURN FAN RUNS WHEN ALL TUs AT MIN (DETERMINED BY TAB)
	RFMAX	SPEED THE RETURN FAN RUNS WHEN ALL TUs AT MAX (DETERMINED BY TAB)
	RFSPD	VARIABLE CALCULATED VALUE OF RETURN FAN SPEED OUTPUT

ELECTRIC LADDER DIAGRAMS

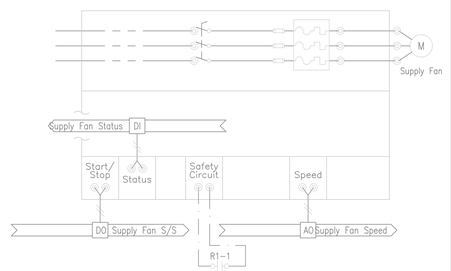

SUPPLY FAN VSD (TYPICAL FOR RETURN FAN VSD)



SAFETY INTERLOCK DETAIL

DESIGNER NOTES:

1. USE WRITTEN SEQUENCES FOR CONSTRUCTION DOCUMENTS. LOGIC DIAGRAM IS FOR DESIGN REFERENCE ONLY.
2. IF EQUIPMENT DIAGRAM IS USED, EDIT POINTS SHOWN TO MATCH VERBIAGE OF SEQUENCE OF OPERATIONS.

M4.01

VAV AHU WITH RETURN FAN - HOT WATER & CHILLED WATER

SCALE: NONE

WAKE COUNTY PUBLIC SCHOOL SYSTEM
111 Corning Road,Suite 190
Cary, NC 27518
(919) 588-3608

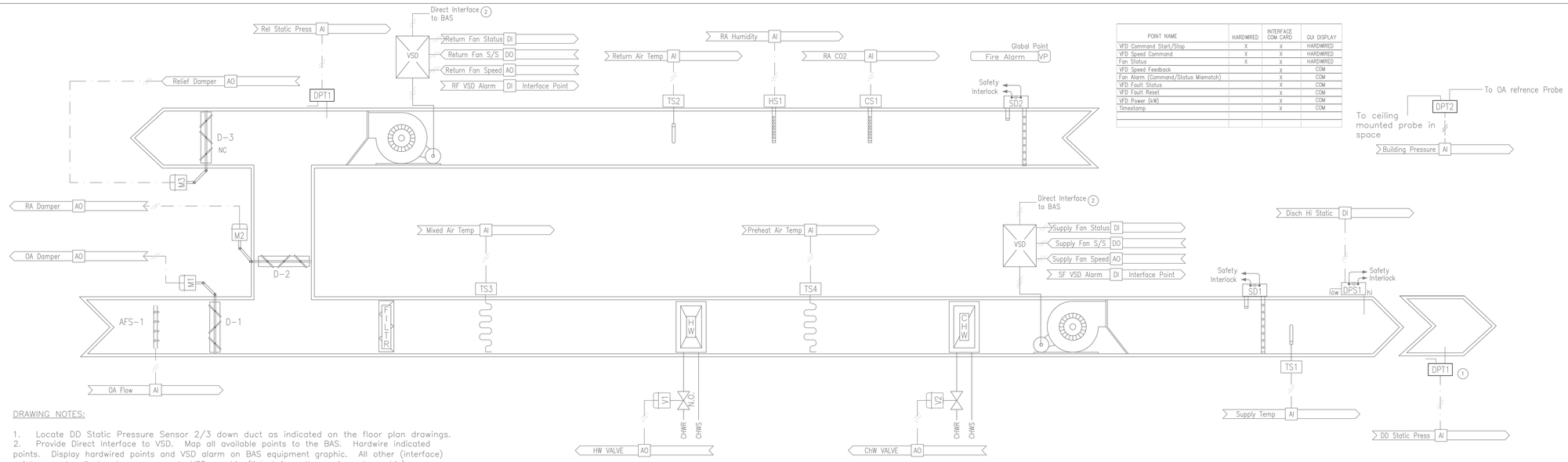

POINT NAME	HARDWIRED	INTERFACE COM CARD	GUI DISPLAY
VFD Command Start/Stop	X	X	HARDWIRED
VFD Speed Command	X	X	HARDWIRED
Fan Status	X	X	HARDWIRED
VFD Speed Feedback		X	COM
Fan Alarm (Command/Status Mismatch)		X	COM
VFD Fault Status		X	COM
VFD Fault Reset		X	COM
VFD Power (kW)		X	COM
Timestamp		X	COM

DRAWING NOTES:

1. Locate DD Static Pressure Sensor 2/3 down duct as indicated on the floor plan drawings.
2. Provide Direct Interface to VSD. Map all available points to the BAS. Hardwire indicated points. Display hardwired points and VSD alarm on BAS equipment graphic. All other (interface) points may be displayed on a separate VSD graphic (linked from the equipment graphic).

POINTS LIST

POINT DESCRIPTOR	POINT TYPE DI	AI	DO	AO	VP	TREND	ALARM	ALARM CONDITION	REMARKS
Supply Fan S/S			•			COV			
Supply Fan Status	•					COV			
SF VSD Alarm	•					COV	•	NOT EQUAL TO COMMAND	Interface Point
Supply Fan Speed				•		COV			
Return Fan S/S			•			COV			
Return Fan Status	•					COV			
RF VSD Alarm	•					COV	•	NOT EQUAL TO COMMAND	Interface Point
Return Fan Speed				•		COV			
DD Static Press		•				15 MIN			
Supply Temp		•				15 MIN			
Fire Alarm					•	COV			Global Point
Disch Hi Static	•					COV	•	ABOVE HIGH LIMIT SETPOINT	
PH Coil DAT		•				15 MIN			
Mixed Air Temp		•				15 MIN	•	BELOW FREEZESTAT SETPOINT	
Return Air Temp		•				15 MIN			
RA Humidity		•				15 MIN			
RA CO2		•				15 MIN	•	ABOVE MAX SETPOINT	
CHW Valve				•		COV			
HW Valve				•		COV			
Rel Static Press		•				15 MIN			
Relief Damper				•		COV			
OA/RA Damper				•		COV			
OA Flow		•				15 MIN			
Building Pressure		•				15 MIN			

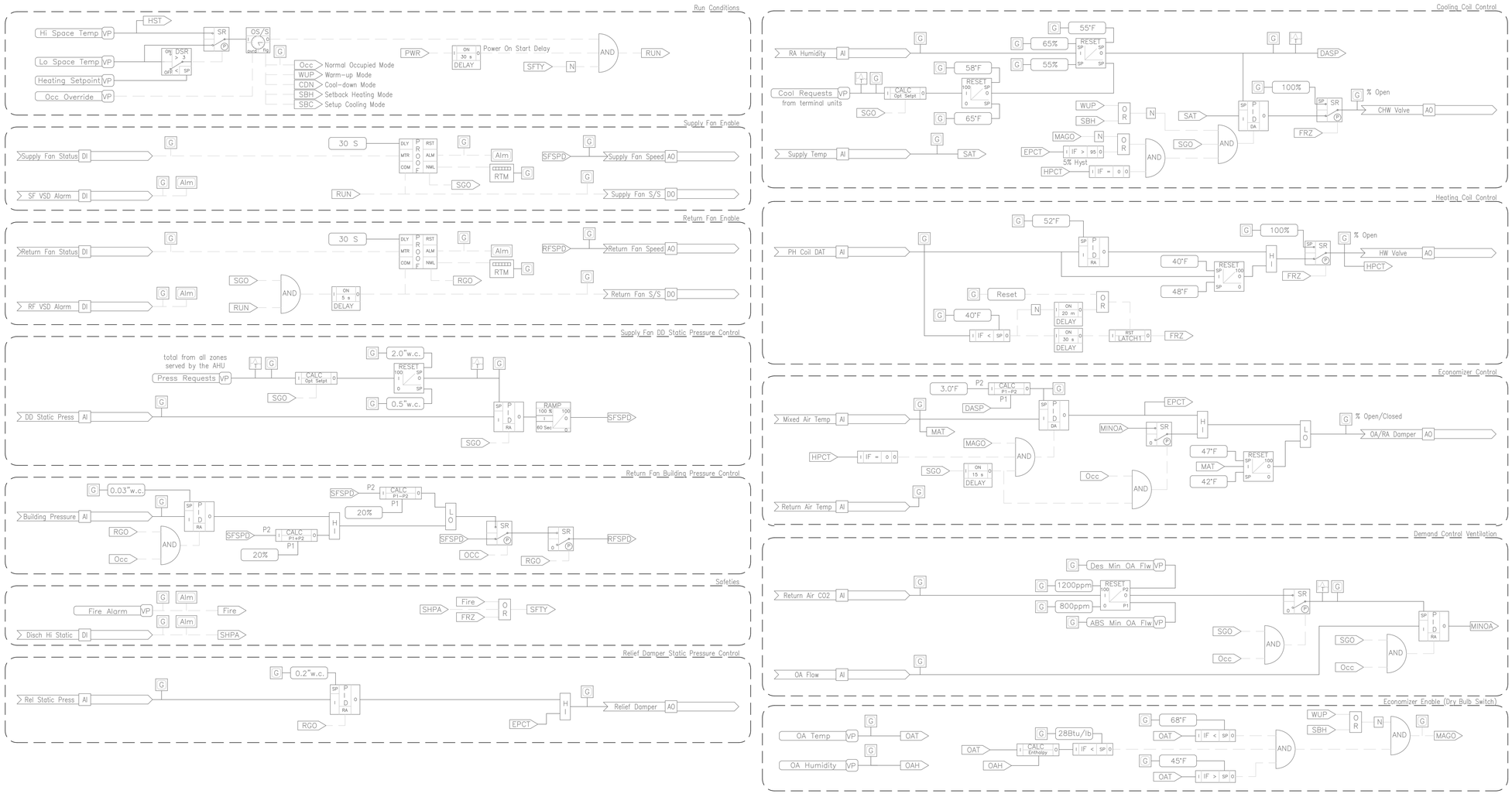

LOGIC VARIABLES

BINARY	ANALOG	DESCRIPTION
Occ		ON WHEN OCCUPIED MODE ACTIVE
RUN		ON WHEN UNIT COMMANDED TO START
SGO		ON WHEN SUPPLY FAN ENERGIZED AND STATUS PROVEN
RGO		ON WHEN RETURN FAN ENERGIZED AND STATUS PROVEN
MAGO		ON WHEN CONDITIONS ALLOW ECONOMIZER CONTROL
SHPA		ON WHEN THE SUPPLY HI PRESSURE ALARM IS ACTIVE
FRZ		ON WHEN A FREEZE CONDITION IS ACTIVE AND IN ALARM
Fire		ON WHEN FIRE ALARM IS ACTIVE
SFTY		ON WHEN A UNIT SHUTDOWN ALARM IS ON
	HST	VARIABLE CALCULATED VALUE OF HIGHEST SPACE TEMPERATURE
	OAT	VARIABLE VALUE OF OUTSIDE AIR TEMPERATURE
	SAT	VARIABLE VALUE OF SUPPLY AIR TEMPERATURE
	PHT	VARIABLE VALUE OF PREHEAT AIR TEMPERATURE
	MAT	VARIABLE VALUE OF MIXED AIR TEMPERATURE
	MINOA	VARIABLE VALUE OF MIN OA DAMPER POSITION (BASED ON OA FLOW PID OUT)
	DASP	VARIABLE CALCULATED VALUE OF DISCHARGE TEMPERATURE SETPOINT
	HPCT	VARIABLE CALCULATED VALUE OF HW VALVE POSITION
	EPCT	VARIABLE CALCULATED VALUE OF ECONOMIZER PID OUTPUT
	SFSPD	VARIABLE CALCULATED VALUE OF SUPPLY FAN SPEED OUTPUT
	RFSPD	VARIABLE CALCULATED VALUE OF RETURN FAN SPEED OUTPUT

ELECTRIC LADDER DIAGRAMS

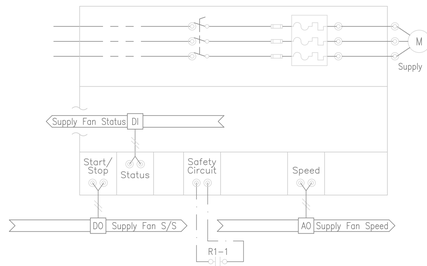

SUPPLY FAN VSD (TYPICAL FOR RETURN FAN VSD)



SAFETY INTERLOCK DETAIL

DESIGNER NOTES:

1. USE WRITTEN SEQUENCES FOR CONSTRUCTION DOCUMENTS. LOGIC DIAGRAM IS FOR DESIGN REFERENCE ONLY.
2. IF EQUIPMENT DIAGRAM IS USED, EDIT POINTS SHOWN TO MATCH VERBIAGE OF SEQUENCE OF OPERATIONS.

VAV AHU WITH RETURN FAN - HOT WATER & CHILLED WATER (Bldg Pressure)

SCALE: NONE

WAKE COUNTY PUBLIC SCHOOL SYSTEM
111 Corning Road,Suite 190
Cary, NC 27518
(919) 588-3608

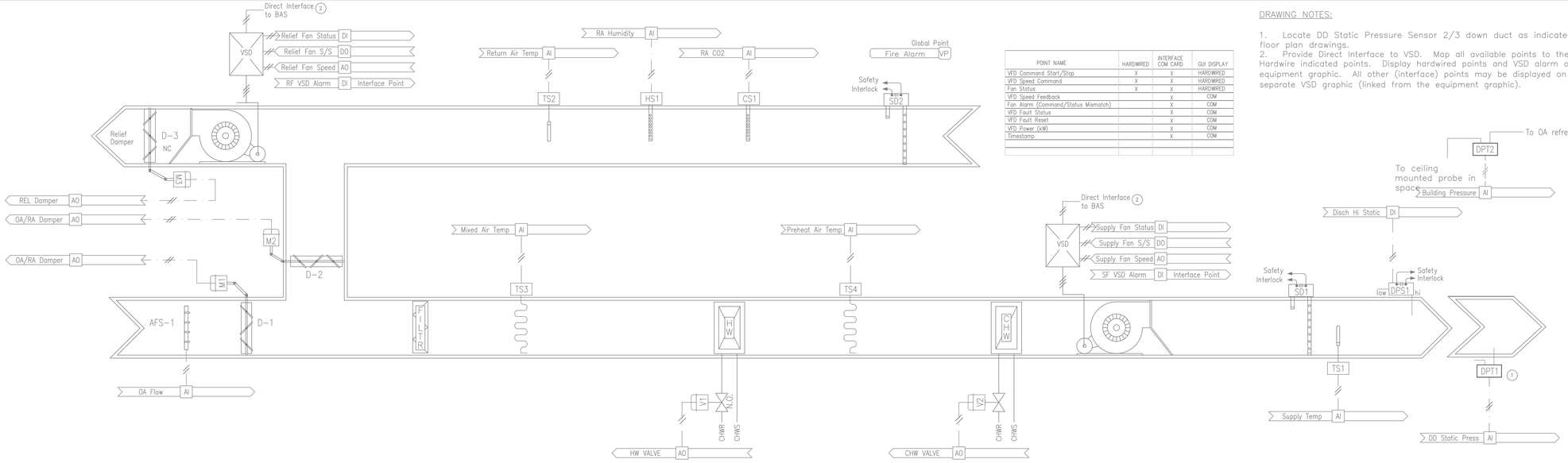

POINT NAME	HARDWIRED	INTERFACE COM CARD	GUI DISPLAY
VFD Command Start/Stop	X	X	HARDWIRED
VFD Speed Command	X	X	HARDWIRED
Fan Status	X	X	HARDWIRED
VFD Speed Feedback		X	COM
Fan Alarm (Command/Status Mismatch)		X	COM
VFD Fault Status		X	COM
VFD Fault Reset		X	COM
VFD Power (kW)		X	COM
Timestamp		X	COM

DRAWING NOTES:

1. Locate DD Static Pressure Sensor 2/3 down duct as indicated on the floor plan drawings.
2. Provide Direct Interface to VSD. Map all available points to the BAS. Hardwire indicated points. Display hardwired points and VSD alarm on BAS equipment graphic. All other (interface) points may be displayed on a separate VSD graphic (linked from the equipment graphic).

POINTS LIST

POINT DESCRIPTOR	POINT TYPE DI	AI	DO	AO	VP	TREND	ALARM	ALARM CONDITION	REMARKS
Supply Fan S/S			•			COV			
Supply Fan Status	•					COV			
SF VSD Alarm	•					COV	•	NOT EQUAL TO COMMAND	Interface Point
Supply Fan Speed				•		COV			
Return Fan S/S			•			COV			
Return Fan Status	•					COV			
RF VSD Alarm	•					COV	•	NOT EQUAL TO COMMAND	Interface Point
Relief Fan Speed				•		COV			
DD Static Press		•				15 MIN			
Supply Temp		•				15 MIN			
Fire Alarm					•	COV	•		Global Point
Disch Hi Static	•					COV	•	ABOVE HIGH LIMIT SETPOINT	
PH Coil DAT		•				15 MIN			
Mixed Air Temp		•				15 MIN	•	BELOW MALL SETPOINT	
Return Air Temp		•				15 MIN			
RA Humidity		•				15 MIN			
RA CO2		•				15 MIN	•	ABOVE MAX SETPOINT	
CHW Valve				•		COV			
HW Valve				•		COV			
OA/RA Damper				•		15 MIN			
OA Flow		•				COV			
Building Pressure		•				15 MIN			
Relief Damper				•		15 MIN			
Rel Dpr End Switch	•								

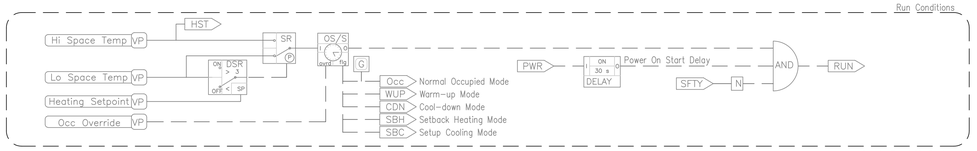

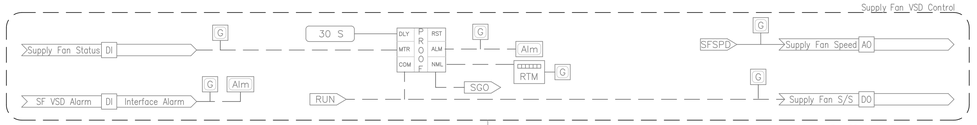

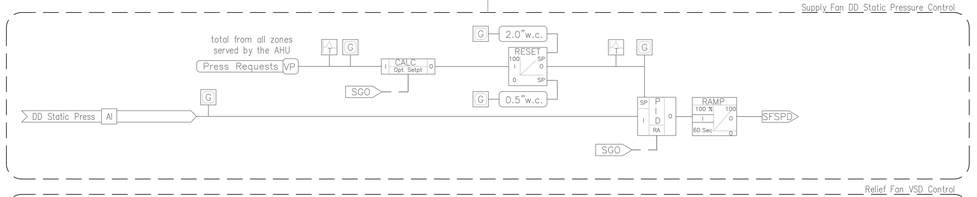

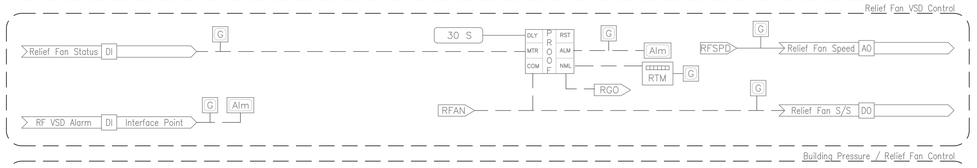

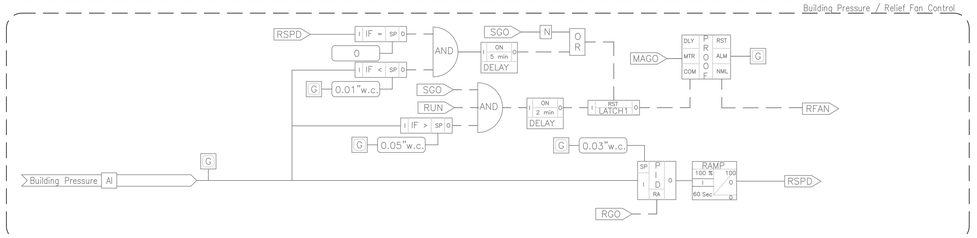



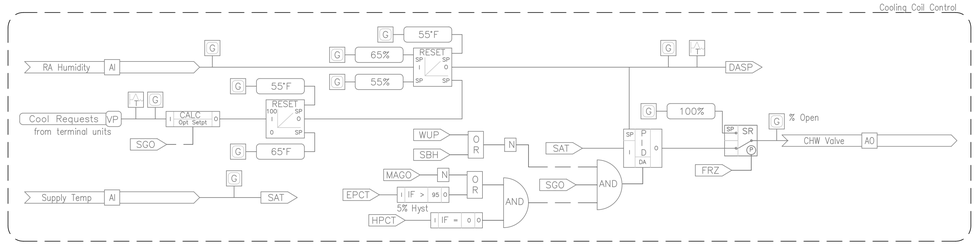

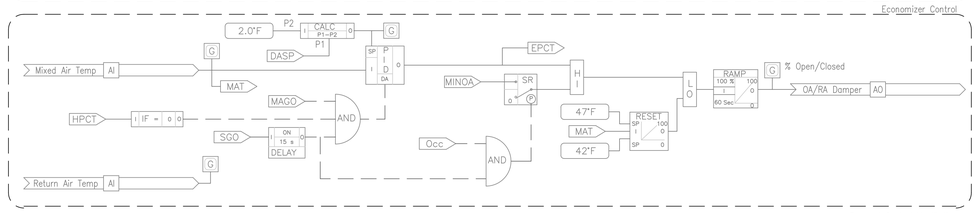

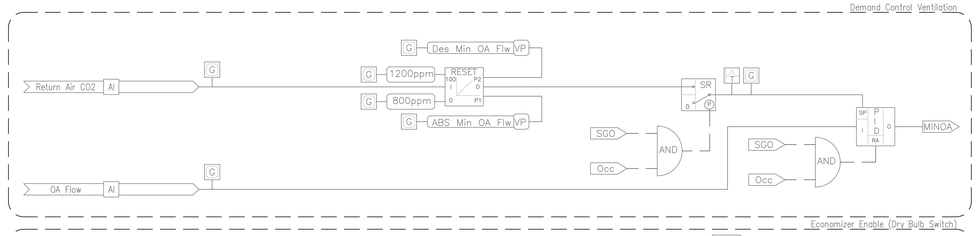

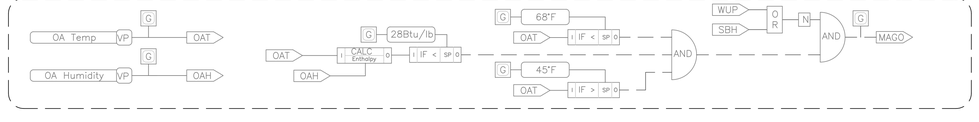

LOGIC VARIABLES

BINARY	ANALOG	DESCRIPTION
Occ		ON WHEN OCCUPIED MODE ACTIVE
RUN		ON WHEN UNIT COMMANDED TO START
SGO		ON WHEN SUPPLY FAN ENERGIZED AND STATUS PROVEN
MAGO		ON WHEN CONDITIONS ALLOW ECONOMIZER CONTROL
SHPA		ON WHEN THE SUPPLY HI PRESSURE ALARM IS ACTIVE
FRZ		ON WHEN A FREEZE CONDITION IS ACTIVE AND IN ALARM
Fire		ON WHEN FIRE ALARM IS ACTIVE
SFTY		ON WHEN A UNIT SHUTDOWN ALARM IS ON
RFAN		ON WHEN RELIEF FAN COMMANDED TO START
RGO		ON WHEN RELIEF FAN ENERGIZED AND STATUS PROVEN
WUP		ON WHEN WARM -UP MODE ACTIVE
SBH		ON WHEN HEATING MODE SETBACK ACTIVE
	HST	VARIABLE CALCULATED VALUE OF HIGHEST SPACE TEMPERATURE
	OAT	VARIABLE VALUE OF OUTSIDE AIR TEMPERATURE
	SAT	VARIABLE VALUE OF SUPPLY AIR TEMPERATURE
	PHT	VARIABLE VALUE OF PREHEAT AIR TEMPERATURE
	MAT	VARIABLE VALUE OF MIXED AIR TEMPERATURE
	MINOA	VARIABLE VALUE OF MIN OA DAMPER POSITION (BASED ON OA FLOW PID OUT)
	DASP	VARIABLE CALCULATED VALUE OF DISCHARGE TEMPERATURE SETPOINT
	HPCT	VARIABLE CALCULATED VALUE OF HW VALVE POSITION
	EPCT	VARIABLE CALCULATED VALUE OF ECONOMIZER PID OUTPUT

ELECTRIC LADDER DIAGRAMS

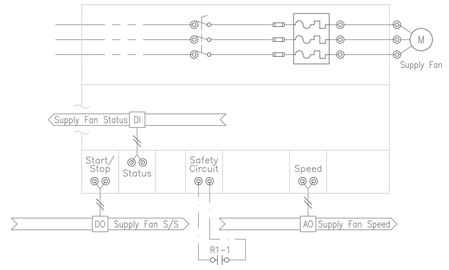

SUPPLY FAN VSD (TYPICAL FOR RETURN FAN VSD)



SAFETY INTERLOCK DETAIL

DESIGNER NOTES:

1. USE WRITTEN SEQUENCES FOR CONSTRUCTION DOCUMENTS. LOGIC DIAGRAM IS FOR DESIGN REFERENCE ONLY.
2. IF EQUIPMENT DIAGRAM IS USED, EDIT POINTS SHOWN TO MATCH VERBIAGE OF SEQUENCE OF OPERATIONS.

M4.03 VAV AHU WITH RELIEF FAN - HOT WATER & CHILLED WATER

SCALE: NONE

WAKE COUNTY PUBLIC SCHOOL SYSTEM
111 Corning Road,Suite 190
Cary, NC 27518
(919) 588-3608

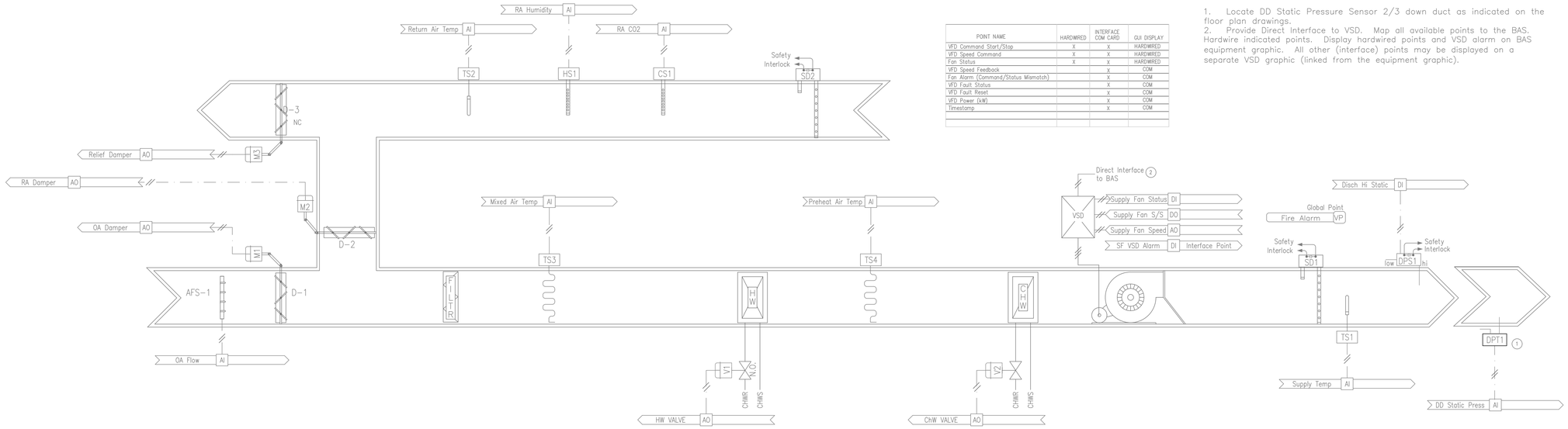

POINT NAME	HARDWIRED	INTERFACE COM CARD	GUI DISPLAY
VFD Command Start/Stop	X	X	HARDWIRED
VFD Speed Command	X	X	HARDWIRED
Fan Status	X	X	HARDWIRED
VFD Speed Feedback		X	COM
Fan Alarm (Command/Status Mismatch)		X	COM
VFD Fault Status		X	COM
VFD Fault Reset		X	COM
VFD Power (kW)		X	COM
Timestamp		X	COM

DRAWING NOTES:

1. Locate DD Static Pressure Sensor 2/3 down duct as indicated on the floor plan drawings.
2. Provide Direct Interface to VSD. Map all available points to the BAS. Hardwire indicated points. Display hardwired points and VSD alarm on BAS equipment graphic. All other (interface) points may be displayed on a separate VSD graphic (linked from the equipment graphic).

POINTS LIST

POINT DESCRIPTOR	POINT TYPE DI	AI	DO	AO	VP	TREND	ALARM	ALARM CONDITION	REMARKS
Supply Fan S/S			•			COV			
Supply Fan Status	•					COV			
SF VSD Alarm	•					COV	•	NOT EQUAL TO COMMAND	Interface Point
Supply Fan Speed				•		COV			
DD Static Press		•				15 MIN			
Supply Temp		•				15 MIN			
Fire Alarm					•	COV			Global Point
Disch Hi Static	•					COV	•	ABOVE HIGH LIMIT SETPOINT	
PH Coil DAT		•				15 MIN			
Mixed Air Temp		•				15 MIN	•	BELOW FREEZESTAT SETPOINT	
Return Air Temp		•				15 MIN			
RA Humidity		•				15 MIN			
RA CO2		•				15 MIN	•	ABOVE MAX SETPOINT	
CHW Valve				•		COV			
HW Valve				•		COV			
OA/RA Damper				•		COV			
OA Flow		•				15 MIN			

LOGIC VARIABLES

BINARY	ANALOG	DESCRIPTION
Occ		ON WHEN OCCUPIED MODE ACTIVE
RUN		ON WHEN UNIT COMMANDED TO START
SGO		ON WHEN SUPPLY FAN ENERGIZED AND STATUS PROVEN
MAGO		ON WHEN CONDITIONS ALLOW ECONOMIZER CONTROL
SHPA		ON WHEN THE SUPPLY HI PRESSURE ALARM IS ACTIVE
FRZ		ON WHEN A FREEZE CONDITION IS ACTIVE AND IN ALARM
Fire		ON WHEN FIRE ALARM IS ACTIVE
SFTY		ON WHEN A UNIT SHUTDOWN ALARM IS ON
	HST	VARIABLE CALCULATED VALUE OF HIGHEST SPACE TEMPERATURE
	OAT	VARIABLE VALUE OF OUTSIDE AIR TEMPERATURE
	SAT	VARIABLE VALUE OF SUPPLY AIR TEMPERATURE
	PHT	VARIABLE VALUE OF PREHEAT AIR TEMPERATURE
	MAT	VARIABLE VALUE OF MIXED AIR TEMPERATURE
	MINOA	VARIABLE VALUE OF MIN OA DAMPER POSITION (BASED ON OA FLOW PID OUT)
	DASP	VARIABLE CALCULATED VALUE OF DISCHARGE TEMPERATURE SETPOINT
	HPCT	VARIABLE CALCULATED VALUE OF HW VALVE POSITION
	EPCT	VARIABLE CALCULATED VALUE OF ECONOMIZER PID OUTPUT

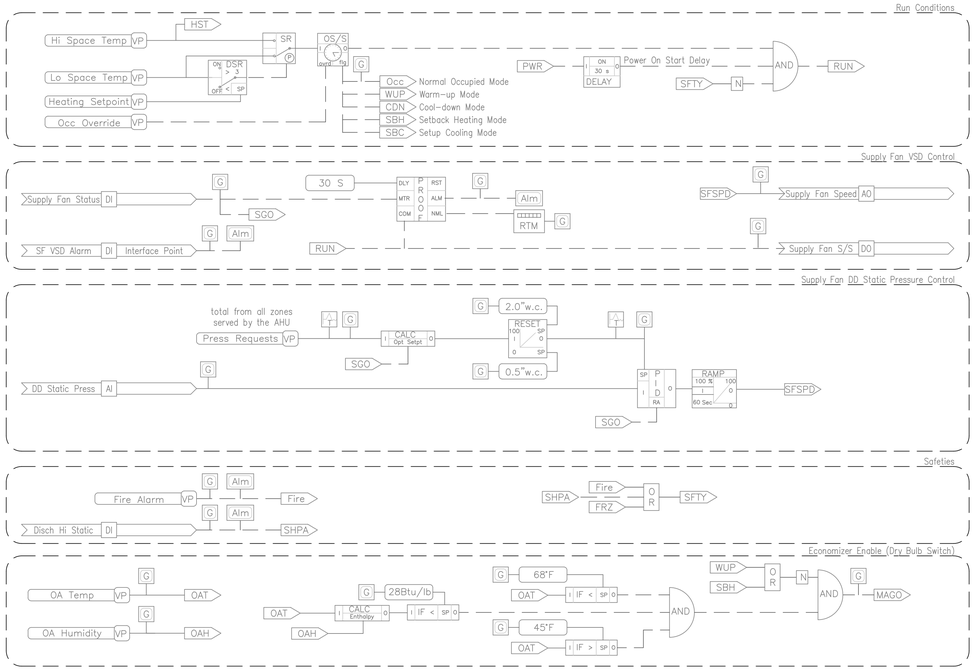

ELECTRIC LADDER DIAGRAMS

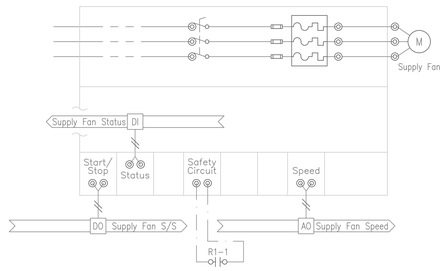

SUPPLY FAN VSD (TYPICAL FOR RETURN FAN VSD)



SAFETY INTERLOCK DETAIL

DESIGNER NOTES:

1. USE WRITTEN SEQUENCES FOR CONSTRUCTION DOCUMENTS. LOGIC DIAGRAM IS FOR DESIGN REFERENCE ONLY.
2. IF EQUIPMENT DIAGRAM IS USED, EDIT POINTS SHOWN TO MATCH VERBIAGE OF SEQUENCE OF OPERATIONS.

WAKE COUNTY PUBLIC SCHOOL SYSTEM
111 Corning Road,Suite 190
Cary, NC 27518
(919) 588-3608

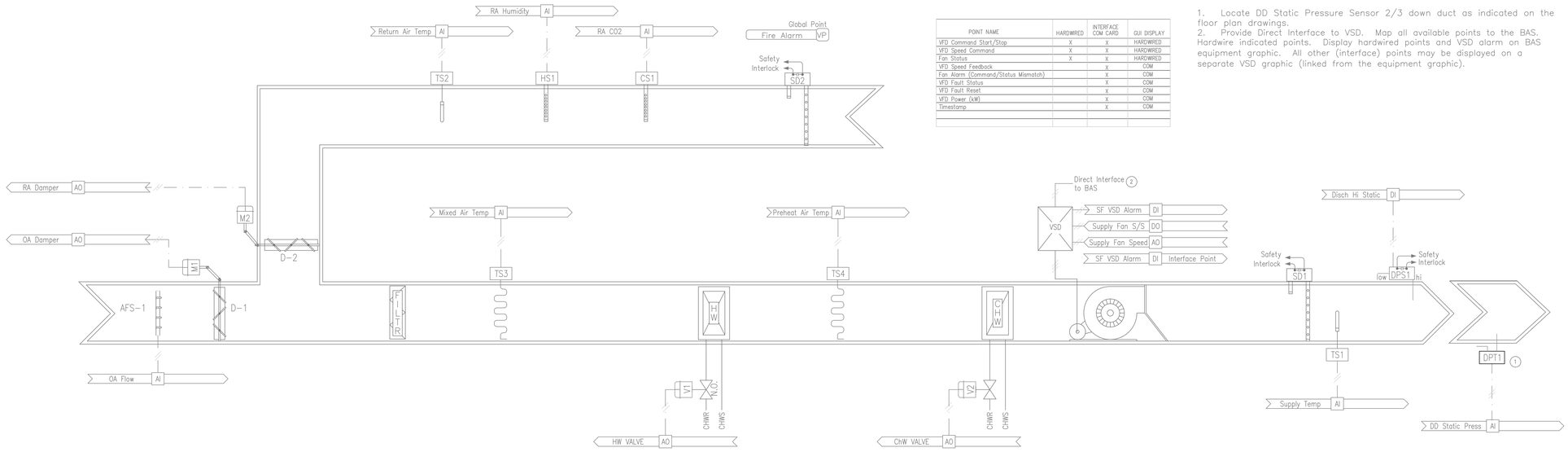

DRAWING NOTES:

1. Locate DD Static Pressure Sensor 2/3 down duct as indicated on the floor plan drawings.
2. Provide Direct Interface to VSD. Map all available points to the BAS. Hardwire indicated points. Display hardwired points and VSD alarm on BAS equipment graphic. All other (interface) points may be displayed on a separate VSD graphic (linked from the equipment graphic).

POINT NAME	HARDWIRED	INTERFACE COM CARD	GUI DISPLAY
VFD Command Start/Stop	X	X	HARDWIRED
VFD Speed Command	X	X	HARDWIRED
Fan Status	X	X	HARDWIRED
VFD Speed Feedback		X	COM
Fan Alarm (Command/Status Mismatch)		X	COM
VFD Fault Status		X	COM
VFD Fault Reset		X	COM
VFD Power (kW)		X	COM
Timestamp		X	COM

POINTS LIST

POINT DESCRIPTOR	POINT TYPE DI	AI	DO	AO	VP	TREND	ALARM	ALARM CONDITION	REMARKS
Supply Fan S/S			•			COV			
Supply Fan Status	•					COV			
SF VSD Alarm	•					COV	•	NOT EQUAL TO COMMAND	Interface Point
Supply Fan Speed				•		COV			
DD Static Press		•				15 MIN			
Supply Temp		•				15 MIN			
Fire Alarm					•	COV			Global Point
Disch Hi Static	•					COV	•	ABOVE HIGH LIMIT SETPOINT	
PH Coil DAT		•				15 MIN			
Mixed Air Temp		•				15 MIN	•	BELOW FREEZESTAT SETPOINT	
Return Air Temp		•				15 MIN			
RA Humidity		•				15 MIN			
RA CO2		•				15 MIN	•	ABOVE MAX SETPOINT	
CHW Valve				•		COV			
HW Valve				•		COV			
OA/RA Damper				•		COV			
OA Flow		•				15 MIN			

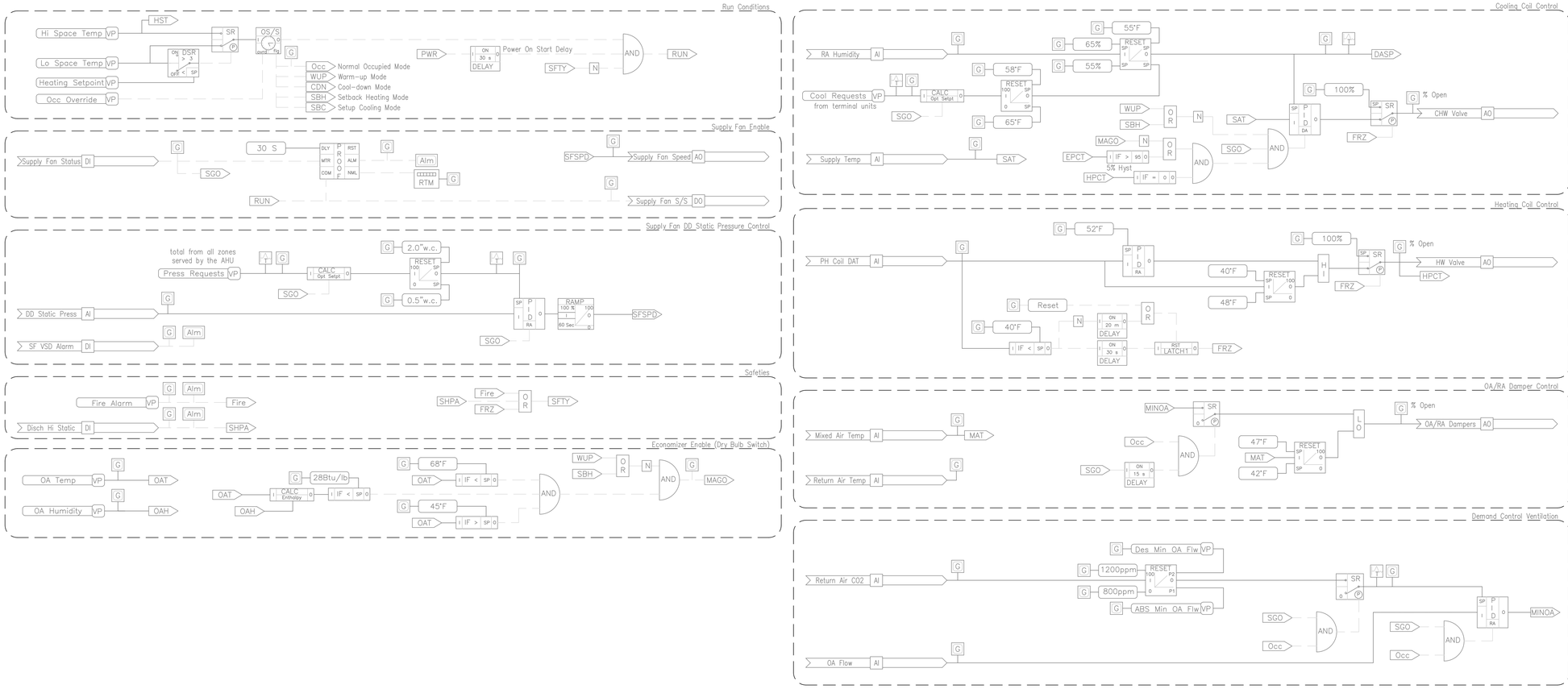

LOGIC VARIABLES

BINARY	ANALOG	DESCRIPTION
Occ		ON WHEN OCCUPIED MODE ACTIVE
RUN		ON WHEN UNIT COMMANDED TO START
SGO		ON WHEN SUPPLY FAN ENERGIZED AND STATUS PROVEN
MAGO		ON WHEN CONDITIONS ALLOW ECONOMIZER CONTROL
SHPA		ON WHEN THE SUPPLY HI PRESSURE ALARM IS ACTIVE
FRZ		ON WHEN A FREEZE CONDITION IS ACTIVE AND IN ALARM
Fire		ON WHEN FIRE ALARM IS ACTIVE
SFTY		ON WHEN A UNIT SHUTDOWN ALARM IS ON
	HST	VARIABLE CALCULATED VALUE OF HIGHEST SPACE TEMPERATURE
	OAT	VARIABLE VALUE OF OUTSIDE AIR TEMPERATURE
	SAT	VARIABLE VALUE OF SUPPLY AIR TEMPERATURE
	PHT	VARIABLE VALUE OF PREHEAT AIR TEMPERATURE
	MAT	VARIABLE VALUE OF MIXED AIR TEMPERATURE
	MINOA	VARIABLE VALUE OF MIN OA DAMPER POSITION (BASED ON OA FLOW PID OUT)
	DASP	VARIABLE CALCULATED VALUE OF DISCHARGE TEMPERATURE SETPOINT
	HPCT	VARIABLE CALCULATED VALUE OF HW VALVE POSITION

ELECTRIC LADDER DIAGRAMS

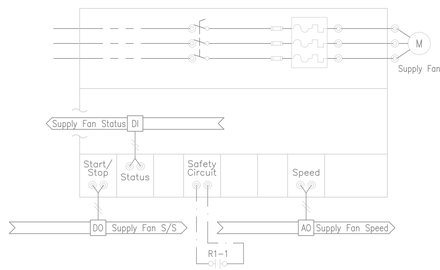

SUPPLY FAN VSD (TYPICAL FOR RETURN FAN VSD)



SAFETY INTERLOCK DETAIL

DESIGNER NOTES:

1. USE WRITTEN SEQUENCES FOR CONSTRUCTION DOCUMENTS. LOGIC DIAGRAM IS FOR DESIGN REFERENCE ONLY.
2. IF EQUIPMENT DIAGRAM IS USED, EDIT POINTS SHOWN TO MATCH VERBIAGE OF SEQUENCE OF OPERATIONS.

M4.05

VAV AHU WITHOUT ECONOMIZER - HOT WATER & CHILLED WATER

SCALE: NONE

WAKE COUNTY PUBLIC SCHOOL SYSTEM
111 Corning Road,Suite 190
Cary, NC 27518
(919) 588-3608

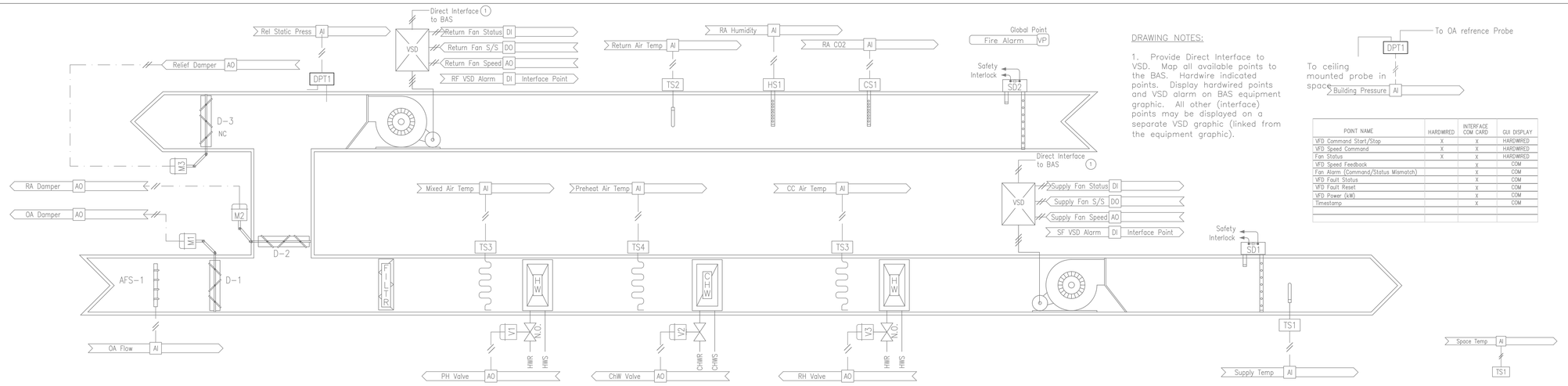

POINT NAME	HARDWIRED	INTERFACE COM CARD	GUI DISPLAY
VFD Command Start/Stop	X	X	HARDWIRED
VFD Speed Command	X	X	HARDWIRED
Fan Status	X	X	HARDWIRED
VFD Speed Feedback		X	COM
Fan Alarm (Command/Status Mismatch)		X	COM
VFD Fault Status		X	COM
VFD Fault Reset		X	COM
VFD Power (kW)		X	COM
Timestamp		X	COM

DRAWING NOTES:

1. Provide Direct Interface to VSD. Map all available points to the BAS. Hardwire indicated points. Display hardwired points and VSD alarm on BAS equipment graphic. All other (interface) points may be displayed on a separate VSD graphic (linked from the equipment graphic).

POINTS LIST

POINT DESCRIPTOR	DI	AI	DO	AO	VP	TREND	ALARM	ALARM CONDITION	REMARKS
Supply Fan S/S			•			COV			
Supply Fan Status	•					COV			
SF VSD Alarm	•					COV	•	NOT EQUAL TO COMMAND	Interface Point
Supply Fan Speed				•		COV			
Return Fan S/S			•			COV			
Return Fan Status	•					COV			
RF VSD Alarm	•					COV	•	NOT EQUAL TO COMMAND	Interface Point
Return Fan Speed				•		COV			
Building Pressure		•				15 MIN			
Supply Temp		•				15 MIN			
Fire Alarm					•	COV			Global Point
CC Air Temp		•				15 MIN			
PH Coil DAT		•				15 MIN			
Mixed Air Temp		•				15 MIN	•	BELOW FREEZESTAT SETPOINT	
Return Air Temp		•				15 MIN			
RA Humidity		•				15 MIN			
RA CO2		•				15 MIN	•	ABOVE MAX SETPOINT	
Space Temp		•				15 MIN			
CHW Valve				•		COV			
HW Valve				•		COV			
RH Valve				•		COV			
Relief Static Press		•				15 MIN			
Relief Damper				•		COV			
OA/RA Damper				•		COV			
OA Flow		•				15 MIN			

LOGIC VARIABLES

BINARY	ANALOG	DESCRIPTION
Occ		ON WHEN OCCUPIED MODE ACTIVE
RUN		ON WHEN UNIT COMMANDED TO START
SGO		ON WHEN SUPPLY FAN ENERGIZED AND STATUS PROVEN
RGO		ON WHEN RETURN FAN ENERGIZED AND STATUS PROVEN
MAGO		ON WHEN CONDITIONS ALLOW ECONOMIZER OPERATION
OccSP		ON WHEN THE UNIT IS CONTROLLING TO OCCUPIED SPACE TEMP SETPOINTS
DHUM		ON WHEN THE UNIT IS OPERATING IN THE DEHUMIDIFICATION MODE
FRZ		ON WHEN A FREEZE CONDITION IS ACTIVE AND IN ALARM
Fire		ON WHEN FIRE ALARM IS ACTIVE
SFTY		ON WHEN A UNIT SHUTDOWN ALARM IS ON
	HSP	VARIABLE CALCULATED VALUE OF ACTIVE HEATING SETPOINT
	CSP	VARIABLE CALCULATED VALUE OF ACTIVE COOLING SETPOINT
	OAT	VARIABLE VALUE OF OUTSIDE AIR TEMPERATURE
	OAH	VARIABLE VALUE OF OUTSIDE AIR RELATIVE HUMIDITY
	CCT	VARIABLE VALUE OF COOLING COIL DISCHARGE AIR TEMPERATURE
	MAT	VARIABLE VALUE OF MIXED AIR TEMPERATURE
	MINOA	VARIABLE VALUE OF MIN OA DAMPER POSITION (BASED ON OA FLOW PID OUT)
	DASP	VARIABLE CALCULATED VALUE OF DISCHARGE TEMPERATURE SETPOINT
	CPCT	VARIABLE CALCULATED VALUE OF CHW VALVE POSITION
	HPCT	VARIABLE CALCULATED VALUE OF PH VALVE POSITION
	EPCT	VARIABLE CALCULATED VALUE OF ECONOMIZER PID OUTPUT
	SFSPD	VARIABLE CALCULATED VALUE OF THE SUPPLY FAN SPEED OUTPUT
	RHP	VARIABLE CALCULATED VALUE OF CHW VALVE POSITION FOR DEHUMIDIFICATION
	HPID	VARIABLE CALCULATED VALUE OF THE SPACE TEMP HEATING PID LOOP OUTPUT
	CPID	VARIABLE CALCULATED VALUE OF THE SPACE TEMP COOLING PID LOOP OUTPUT
	RFSPD	VARIABLE CALCULATED VALUE OF THE RETURN FAN SPEED OUTPUT

ELECTRIC LADDER DIAGRAMS

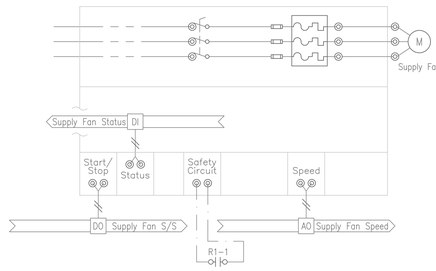

SUPPLY FAN VSD (TYPICAL FOR RETURN FAN VSD)



SAFETY INTERLOCK DETAIL

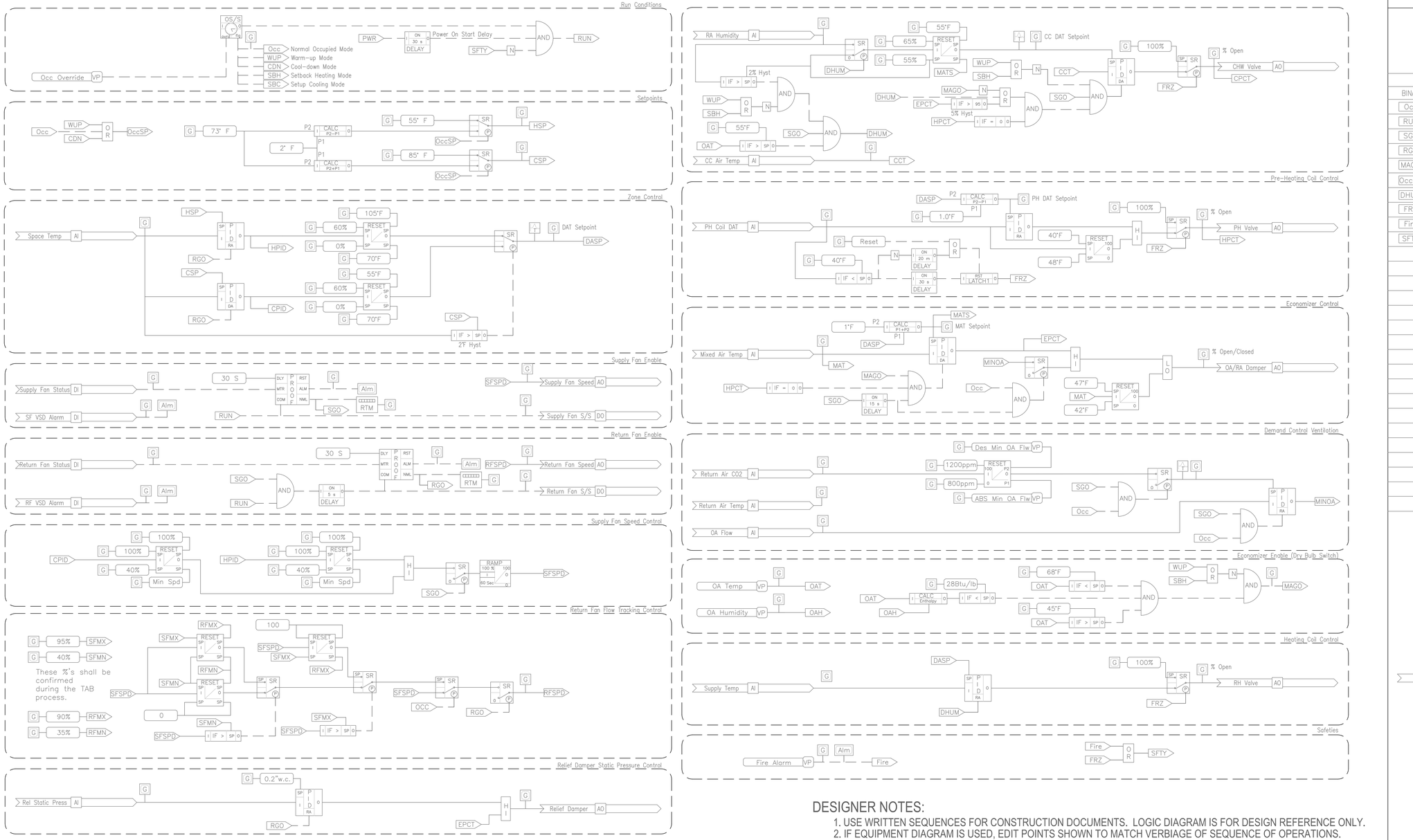

DESIGNER NOTES:

1. USE WRITTEN SEQUENCES FOR CONSTRUCTION DOCUMENTS. LOGIC DIAGRAM IS FOR DESIGN REFERENCE ONLY.
2. IF EQUIPMENT DIAGRAM IS USED, EDIT POINTS SHOWN TO MATCH VERBIAGE OF SEQUENCE OF OPERATIONS.

M4.06 SINGLE ZONE VAV AHU WITH RETURN FAN - HOT WATER, CHILLED WATER, & REHEAT COILS

SCALE: NONE

WAKE COUNTY PUBLIC SCHOOL SYSTEM
111 Corning Road,Suite 190
Cary, NC 27518
(919) 588-3608

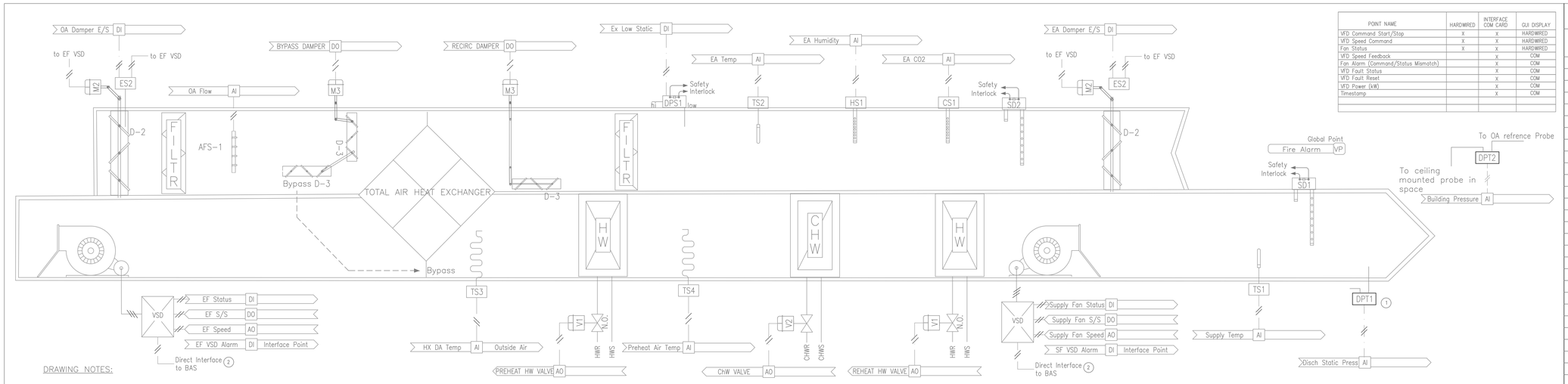

DRAWING NOTES:

1. Locate DD Static Pressure Sensor 2/3 down duct as indicated on the floor plan drawings.
2. Provide Direct Interface to VSD. Map all available points to the BAS. Hardwire indicated points. Display hardwired points and VSD alarm on BAS equipment graphic. All other (interface) points may be displayed on a separate VSD graphic (linked from the equipment graphic).

POINT NAME	HARDWIRED	INTERFACE COM CARD	GUI DISPLAY
VFD Command Start/Stop	X	X	HARDWIRED
VFD Speed Command	X	X	HARDWIRED
Fan Status	X	X	HARDWIRED
VFD Speed Feedback		X	COM
Fan Alarm (Command/Status Mismatch)		X	COM
VFD Fault Status		X	COM
VFD Fault Reset		X	COM
VFD Power (kW)		X	COM
Timestamp		X	COM

POINTS LIST

POINT DESCRIPTOR	POINT TYPE DI	AI	DO	AO	VP	TREND	ALARM	ALARM CONDITION	REMARKS
Supply Fan S/S			•			COV			
Supply Fan Status	•					COV			
SF VSD Alarm	•					COV	•	NOT EQUAL TO COMMAND	Interface Point
Supply Fan Speed				•		COV			
Exhaust Fan S/S			•			COV			
Exhaust Fan Status	•					COV			
EF VSD Alarm	•					COV	•	NOT EQUAL TO COMMAND	Interface Point
Exhaust Fan Speed				•		COV			
DD Static Press		•				15 MIN			
Supply Temp		•				15 MIN			
Fire Alarm					•	COV			Global Point
Disch Hi Static		•				COV			
PH Coil DAT		•				15 MIN			
HX DAT		•				15 MIN			
EA Temp		•				15 MIN			
EA Humidity		•				15 MIN			
EA CO2		•				15 MIN	•	ABOVE MAX SETPOINT	
CHW Valve				•		COV			
HW Valve				•		COV			
Rel Static Press		•				15 MIN			
HX Bypass Damper				•		COV			
EX Damper E/S				•		COV			
OA Damper E/S				•		COV			
OA Flow		•				15 MIN			
Building Pressure		•				15 MIN			

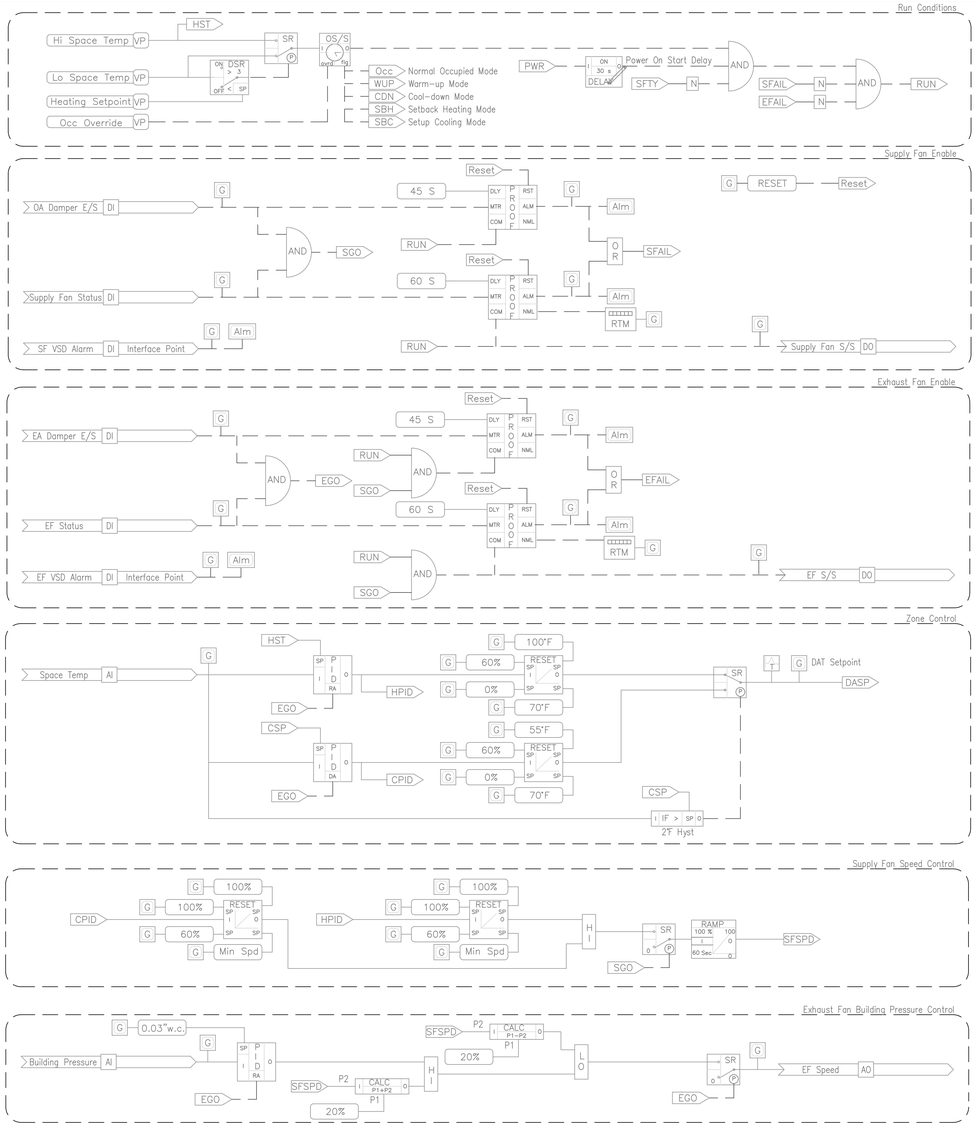

LOGIC VARIABLES

BINARY	ANALOG	DESCRIPTION
Occ		ON WHEN OCCUPIED MODE ACTIVE (see logic diagram for Unocc modes)
RUN		ON WHEN UNIT COMMANDED TO START
SGO		ON WHEN SUPPLY FAN ENERGIZED AND FAN AND DAMPER STATUS PROVEN
EGO		ON WHEN EXHAUST FAN ENERGIZED AND FAN AND DAMPER STATUS PROVEN
Reset		ON WHEN USER RESETS ALL LATCHING ALARMS ON THE UNIT (TOGGLE POINT)
SHPA		ON WHEN THE SUPPLY HI PRESSURE ALARM IS ACTIVE
ELPA		ON WHEN THE EXHAUST LOW PRESSURE ALARM IS ACTIVE
FRZ		ON WHEN A FREEZE CONDITION IS ACTIVE AND IN ALARM
Fire		ON WHEN FIRE ALARM IS ACTIVE
SFTY		ON WHEN A UNIT SHUTDOWN ALARM IS ON
SFAIL		ON WHEN SUPPLY SIDE OF THE UNIT IS ASSESSED AS FAILED
EFAIL		ON WHEN EXHAUST SIDE OF THE UNIT IS ASSESSED AS FAILED
MAGO		ON WHEN CONDITIONS ALLOW ECONOMIZER OPERATION
WUP		ON WHEN WARM UP MODE ACTIVE
SBH		ON WHEN HEATING MODE SETBACK ACTIVE
Extra		
	HST	VARIABLE CALCULATED VALUE OF HIGHEST SPACE TEMPERATURE
	OAT	VARIABLE VALUE OF OUTSIDE AIR TEMPERATURE
	SAT	VARIABLE VALUE OF SUPPLY AIR TEMPERATURE
	PHT	VARIABLE VALUE OF PREHEAT AIR TEMPERATURE
	HXT	VARIABLE VALUE OF HEAT EXCHANGER DISCHARGE AIR TEMPERATURE (OA SIDE)
	MINOA	VARIABLE VALUE OF MIN OA DAMPER POSITION (BASED ON OA FLOW PID OUT)
	DASP	VARIABLE CALCULATED VALUE OF DISCHARGE TEMPERATURE SETPOINT
	HPCT	VARIABLE CALCULATED VALUE OF HW VALVE POSITION
	EPCT	VARIABLE CALCULATED VALUE OF ECONOMIZER PID OUTPUT
	SFSPD	VARIABLE CALCULATED VALUE OF SUPPLY FAN SPEED OUTPUT
	CSP	VARIABLE CALCULATED VALUE OF ACTIVE COOLING SETPOINT
	HPID	VARIABLE CALCULATED VALUE OF SPACE TEMP HEATING PID LOOP OUTPUT
	CPID	VARIABLE CALCULATED VALUE OF SPACE TEMP COOLING PID LOOP OUTPUT

ELECTRIC LADDER DIAGRAMS

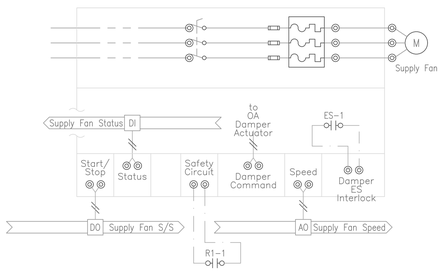

SUPPLY FAN VSD (TYPICAL FOR EXHAUST FAN VSD)



SAFETY INTERLOCK DETAIL

DESIGNER NOTES:

1. USE WRITTEN SEQUENCES FOR CONSTRUCTION DOCUMENTS. LOGIC DIAGRAM IS FOR DESIGN REFERENCE ONLY.
2. IF EQUIPMENT DIAGRAM IS USED, EDIT POINTS SHOWN TO MATCH VERBIAGE OF SEQUENCE OF OPERATIONS.

M4.07

VAV AHU w/Return Fan - Hot Water, Chilled Water, & Energy Recovery

SCALE: NONE

WAKE COUNTY PUBLIC SCHOOL SYSTEM
1429 Rock Quarry Road, Suite 116
Raleigh, NC 27610
(919) 588-3608

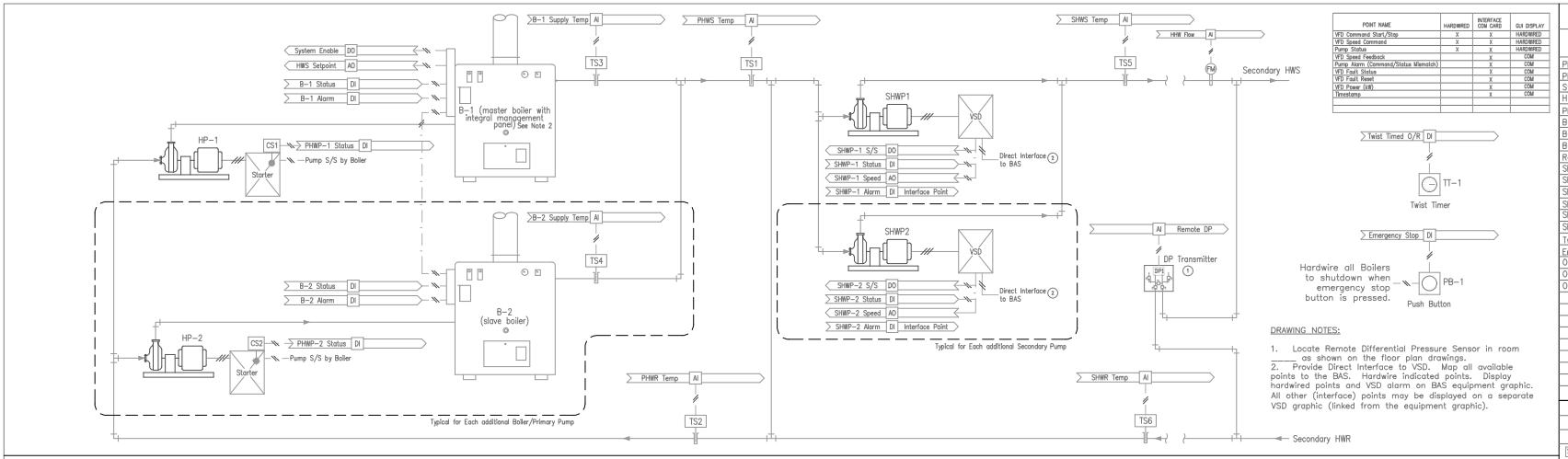

DRAWING NOTES:

1. Locate Remote Differential Pressure Sensor in room _____ as shown on the floor plan drawings.
2. Provide Direct Interface to VSD. Map all available points to the BAS. Hardwire indicated points. Display hardwired points and VSD alarm on BAS equipment graphic. All other (interface) points may be displayed on a separate VSD graphic (linked from the equipment graphic).

POINT NAME	HARDWIRED	INTERFACE COM CARD	GUI DISPLAY
VFD Command Start/Stop	X	X	HARDWIRED
VFD Speed Command	X	X	HARDWIRED
Pump Status	X	X	HARDWIRED
VFD Speed Feedback		X	COM
Pump Alarm (Command/Status Mismatch)		X	COM
VFD Fault Status		X	COM
VFD Fault Reset		X	COM
VFD Power (kW)		X	COM
Timestamp		X	COM

POINTS LIST

POINT DESCRIPTOR	POINT TYPE DI	AI	DO	AO	VP	TREND	ALARM	ALARM CONDITION	REMARKS
PHWS Temp		■				15 MIN			
PHWR Temp		●				15 MIN			
System Enable			●			COV			
HWS Setpoint				●		COV			
PHWP-x Status	●					COV			
B-x Supply Temp		■				15 MIN			
B-x Alarm	●					COV	●		
B-x Status	●					COV			
Remote DP		■				15 MIN			Typical for each
SHWP-x S/S			●			COV			
SHWP-x Status	●					COV			
SHWP-x Speed				●		COV			
SHWP-x Alarm	●					COV	●	NOT TOTAL TO COMMAND	Interface Point
SHWS Temp		■				15 MIN			
SHWR Temp		■				15 MIN			
Twist Timed O/R	●								
Emergency Stop	●								
Outdoor Temp		●				15 MIN			
Outdoor Humidity		●				15 MIN			
Outdoor Enthalpy		●				15 MIN			

LOGIC VARIABLES

BINARY	ANALOG	DESCRIPTION
SysgO		ON WHEN CHILLED WATER SYSTEM IS REQUESTED TO RUN
Px		ON WHEN PUMP Px IS REQUESTED TO RUN
PxGO		ON WHEN PUMP Px IS REQUESTED TO RUN AND STATUS IS PROVEN
SPGO		ON WHEN EITHER SECONDARY PUMP IS REQUESTED AND STATUS IS PROVEN
STOP		ON WHEN THE EMERGENCY STOP BUTTON IS ON
PxFL		ON WHEN SECONDARY PUMP Px IS ASSESSED AS FAILED
PPxFL		ON WHEN PRIMARY PUMP Px IS ASSESSED AS FAILED
BxAL		ON WHEN BOILER B-x'S ALARM POINT IS ON
	BxRT	TOTALIZED VALUE OF BOILER Bx'S RUNTIME
	PxRT	TOTALIZED VALUE OF PUMP Px'S RUNTIME
	OAT	VARIABLE VALUE OF OUTSIDE AIR TEMPERATURE
	SPD	VARIABLE CALCULATED VALUE OF REMOTE DP PID LOOP OUTPUT (PUMP SPEED)
	BFR	VARIABLE CALCULATED VALUE OF THE BOILER FIRING RATE

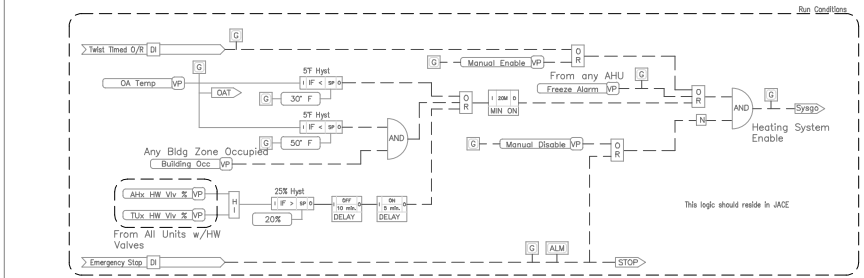

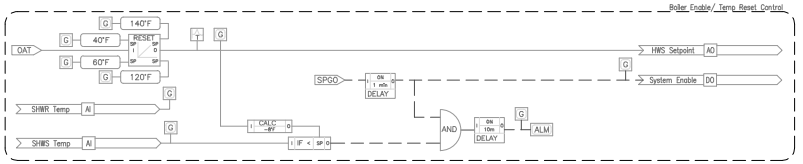





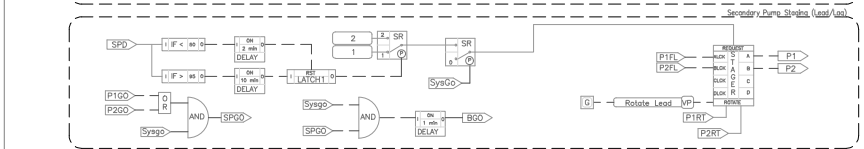

Replace Lead/Standby Secondary Pump Logic (above) with this logic if pumps are not 100% redundant

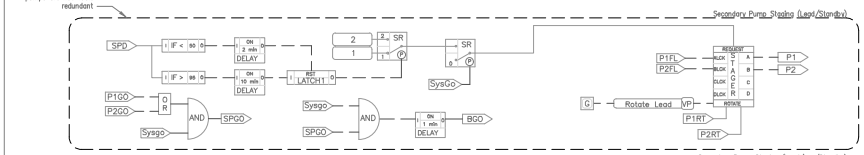

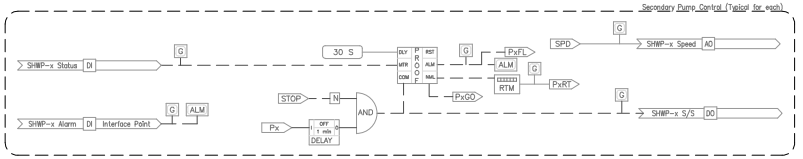

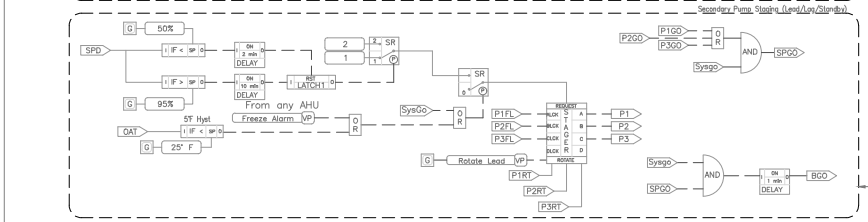

Replace Lead/Standby Secondary Pump Logic (above) with this logic if there are 3 pumps (Lead/ Lag /Standby)

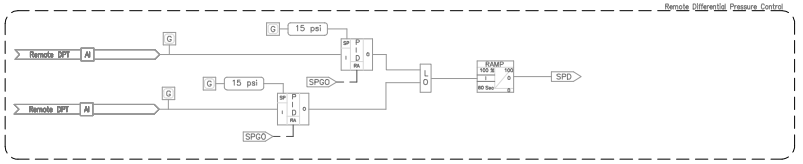

ELECTRIC LADDER DIAGRAM

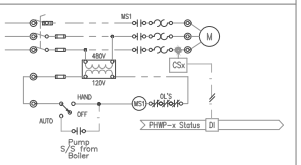

TYPICAL PRIMARY HW PUMP STARTER

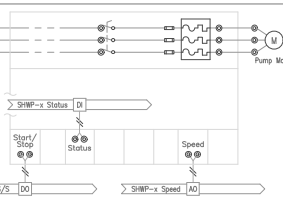

TYPICAL SECONDARY HW PUMP VSD

DESIGNER NOTES:

1. USE WRITTEN SEQUENCES FOR CONSTRUCTION DOCUMENTS. LOGIC DIAGRAM IS FOR DESIGN REFERENCE ONLY.
2. IF EQUIPMENT DIAGRAM IS USED, EDIT POINTS SHOWN TO MATCH VERBIAGE OF SEQUENCE OF OPERATIONS.

WAKE COUNTY PUBLIC SCHOOL SYSTEM
1420 Rock Quarry Road, Suite 118
Raleigh, NC 27610
(919) 556-3008

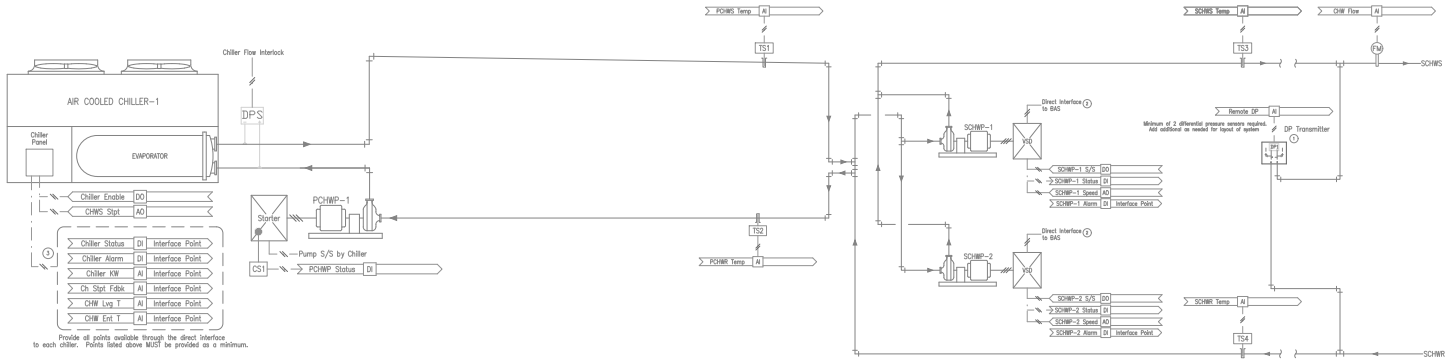

DRAWING NOTES:
1. Typical for each, quantity as indicated. Locate Remote Differential Pressure Sensors in rooms _____ as shown on the floor plan drawings. Control to lowest reading if more than 1 required.
2. Provide Direct Interface to VSD. Map all available points to the BAS. Hardwire indicated points. Display hardwired points and VSD alarm on BAS equipment graphic. All other (interface) points may be displayed on a separate VSD graphic (linked from the equipment graphic). Reference VSD Schematic/Logic detail for more information.
3. Provide Direct Interface to Chiller. Map all available points to the BAS. Hardwire indicated points. Display hardwired points and Chiller alarm on BAS System graphic. All other (interface) points may be displayed on a separate Chiller graphic (linked from the System graphic).

POINTS LIST

POINT DESCRIPTOR	POINT TYPE DI	AI	DO	AO	VP	TREND	ALARM	ALARM CONDITION	REMARKS
PCHWP-1-x Status	•					COV			
SCHWP-x S/S			•			COV			
SCHWP-x Status	•					COV			
SCHWP-x Speed				•		COV			
SCHWP-x Alarm	•					COV	•	NOT EQUAL TO COMMAND	Interface Point
SCHWS Temp		•				15 MIN			
SCHWR Temp		•				15 MIN			
PCHWS Temp		•				15 MIN			
PCHWR Temp		•				15 MIN			
ChWS Setpoint				•		COV			
Chiller Enable			•			COV			
Chiller Status	•					COV			Interface Point
Chiller Alarm	•					COV			Interface Point
Chiller kW		•				COV			Interface Point
Setpoint Fdbk		•				COV			Interface Point
ChW Ent Temp		•				15 MIN			Interface Point
ChW Lvg Temp		•				15 MIN			Interface Point
Remote DP		•				15 MIN			Typical for each
Outdoor Temp		•				15 MIN			
Outdoor Humidity		•				15 MIN			
Outdoor Enthalpy		•				15 MIN			

LOGIC VARIABLES

BINARY	ANALOG	DESCRIPTION
Sysgo		ON WHEN CHILLED WATER SYSTEM IS REQUESTED TO RUN
Px		ON WHEN PUMP Px IS REQUESTED TO RUN
PxGO		ON WHEN PUMP Px IS REQUESTED TO RUN AND STATUS IS PROVEN
PPGO		ON WHEN PRIMARY PUMP IS REQUESTED TO RUN AND STATUS IS PROVEN
SPGO		ON WHEN EITHER SECONDARY PUMP IS REQUESTED AND STATUS IS PROVEN
CHST		ON WHEN THE CHILLER STATUS IS ON
CHGO		ON WHEN THE CHILLER IS REQUESTED TO RUN
CxFL		ON WHEN THE CHILLER-x IS ASSESSED AS FAILED
	PxRT	TOTALIZED VALUE OF PUMP Px'S RUNTIME
	OAT	VARIABLE VALUE OF OUTSIDE AIR TEMPERATURE
	SPD	VARIABLE CALCULATED VALUE OF REMOTE DP PID LOOP OUTPUT (PUMP SPEED)
	CWSP	VARIABLE VALUE OF CHILLED WATER SUPPLY TEMPERATURE SETPOINT

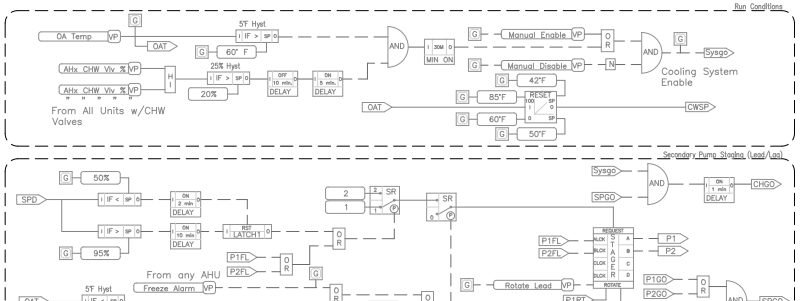

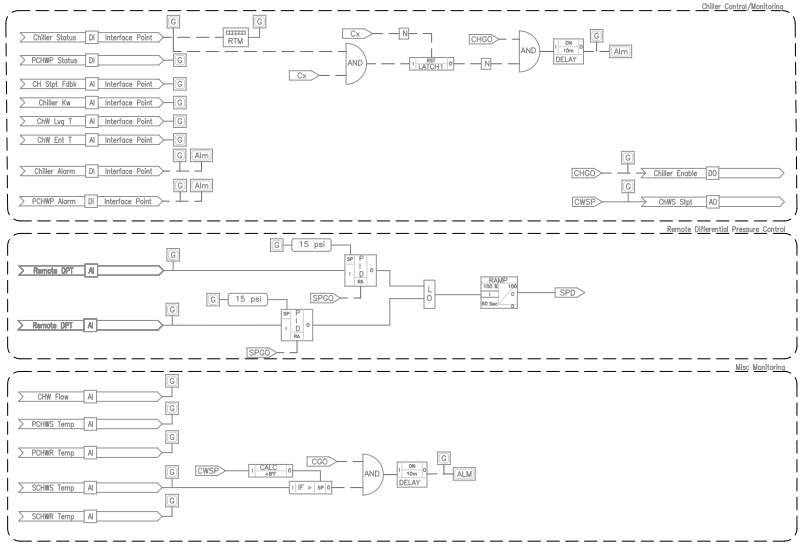

POINT NAME	HARDWIRED	INTERFACE COM CARD	GUI DISPLAY
VFD Command Start/Stop	X	X	HARDWIRED
VFD Speed Command	X	X	HARDWIRED
Pump Status	X	X	HARDWIRED
VFD Speed Feedback		X	COM
Pump Alarm (Command/Status Mismatch)		X	COM
VFD Fault Status		X	COM
VFD Fault Reset		X	COM
VFD Power (kW)		X	COM
Timestamp		X	COM

DESIGNER NOTES:

1. USE WRITTEN SEQUENCES FOR CONSTRUCTION DOCUMENTS. LOGIC DIAGRAM IS FOR DESIGN REFERENCE ONLY.
2. IF EQUIPMENT DIAGRAM IS USED, EDIT POINTS SHOWN TO MATCH VERBIAGE OF SEQUENCE OF OPERATIONS.

ELECTRIC LADDER DIAGRAM

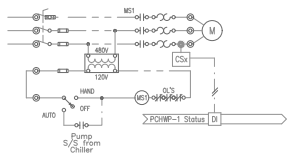

TYPICAL PRIMARY CHW PUMP STARTER

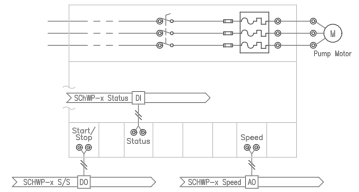

TYPICAL SECONDARY CHW PUMP VSD

WAKE COUNTY PUBLIC SCHOOL SYSTEM
1429 Rock Quarry Road, Suite 116
Raleigh, NC 27610
(919) 588-3808

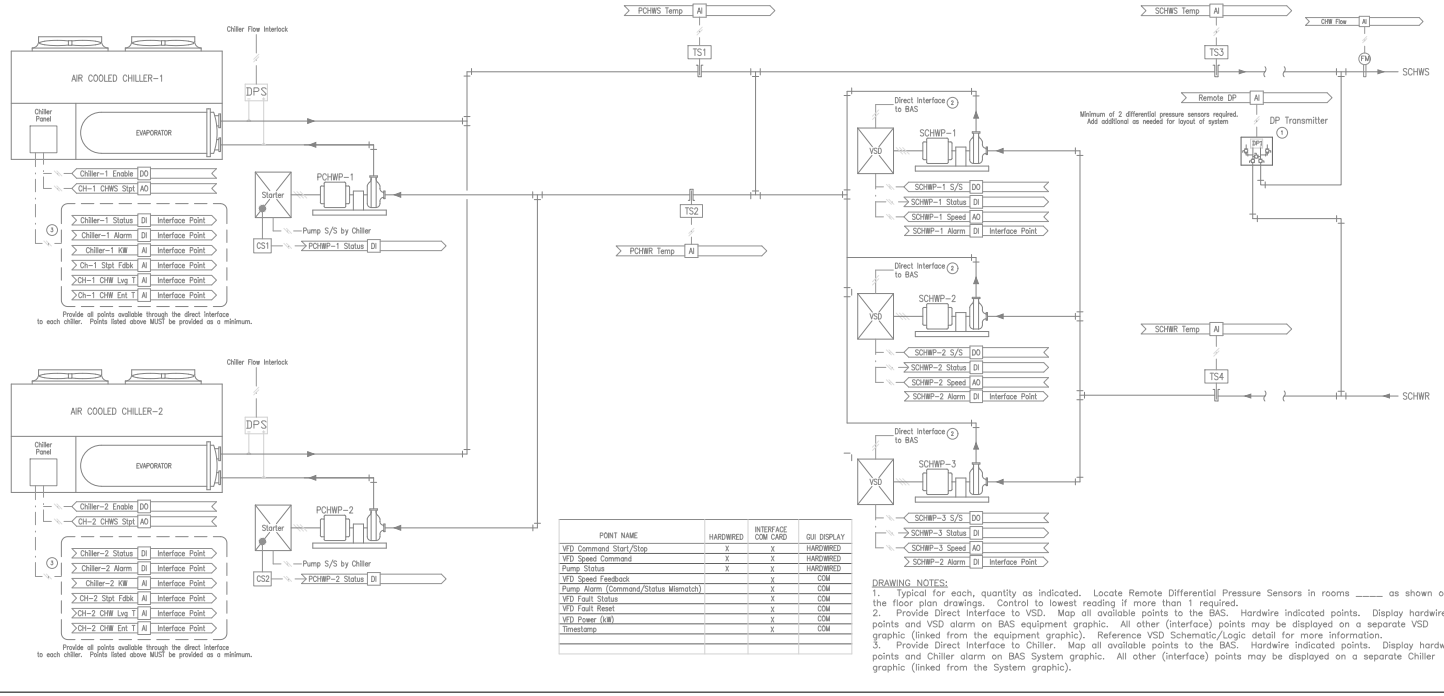

POINT NAME	HARDWIRED	INTERFACE COM CARD	GUI DISPLAY
VFD Command Start/Stop	X	X	HARDWIRED
VFD Speed Command	X	X	HARDWIRED
Pump Status	X	X	HARDWIRED
VFD Speed Feedback		X	COM
Pump Alarm (Command/Status Mismatch)		X	COM
VFD Fault Status		X	COM
VFD Fault Reset		X	COM
VFD Power (kW)		X	COM
Timestamp		X	COM

DRAWING NOTES:
1. Typical for each, quantity as indicated. Locate Remote Differential Pressure Sensors in rooms _____ as shown on the floor plan drawings. Control to lowest reading if more than 1 required.
2. Provide Direct Interface to VSD. Map all available points to the BAS. Hardwire indicated points. Display hardwired points and VSD alarm on BAS equipment graphic. All other (interface) points may be displayed on a separate VSD graphic (linked from the equipment graphic). Reference VSD Schematic/Logic detail for more information.
3. Provide Direct Interface to Chiller. Map all available points to the BAS. Hardwire indicated points. Display hardwired points and Chiller alarm on BAS System graphic. All other (interface) points may be displayed on a separate Chiller graphic (linked from the System graphic).

POINTS LIST

POINT DESCRIPTOR	POINT TYPE DI	AI	DO	AO	VP	TREND	ALARM	ALARM CONDITION	REMARKS
PCHWP-x Status	●					COV			
SCHWP-x S/S			●			COV			
SCHWP-x Status	●					COV			
SCHWP-x Speed				●		COV			
SCHWP-x Alarm	●					COV	●	NOT EQUAL TO COMMAND	Interface Point
SCHWS Temp		●				15 MIN			
SCHWR Temp		●				15 MIN			
PCHWS Temp		●				15 MIN			
PCHWR Temp		●				15 MIN			
CH-x ChWS Setpoint				●		COV			
Chiller-x Enable			●			COV			
Chiller-x Status	●					COV			Interface Point
Chiller-x Alarm	●					COV			Interface Point
Chiller-x kW		●				COV			Interface Point
CH-x Setpoint Fdbk		●				COV			Interface Point
CH-x ChW Ent Temp		●				15 MIN			Interface Point
CH-x ChW Lvg Temp		●				15 MIN			Interface Point
Remote DP		●				15 MIN			Typical for each
Outdoor Temp		●				15 MIN			
Outdoor Humidity		●				15 MIN			
Outdoor Enthalpy		●				15 MIN			

LOGIC VARIABLES

BINARY	ANALOG	DESCRIPTION
Sysgo		ON WHEN CHILLED WATER SYSTEM IS REQUESTED TO RUN
PxGO		ON WHEN SECONDARY PUMP Px IS REQUESTED TO RUN AND STATUS IS PROVEN
Px		ON WHEN SECONDARY PUMP Px IS REQUESTED TO RUN
CHGO		ON WHEN THE PRIMARY SYSTEM ISREQUESTED TO RUN
SPGO		ON WHEN ANY SECONDARY PUMP IS REQUESTED AND STATUS IS PROVEN
Cx		ON WHEN THE CHILLER-x IS ENABLED
CxFL		ON WHEN THE CHILLER-x IS ASSESSED AS FAILED
LAG		ON WHEN THE LAG CHILLER IS REQUESTED
	CxRT	TOTALIZED VALUE OF CHILLER-x'S RUNTIME
	PxRT	TOTALIZED VALUE OF PUMP Px'S RUNTIME
	OAT	VARIABLE VALUE OF OUTSIDE AIR TEMPERATURE
	SPD	VARIABLE CALCULATED VALUE OF REMOTE DP PID LOOP OUTPUT (PUMP SPEED)
	CWSP	VARIABLE VALUE OF CHILLED WATER SUPPLY TEMPERATURE SETPOINT
	CxKW	VARIABLE VALUE OF CHILLER-x KILLOWATTS
	SCWS	VARIABLE VALUE OF THE SECONDARY CHILLED WATER SUPPLY TEMPERATURE

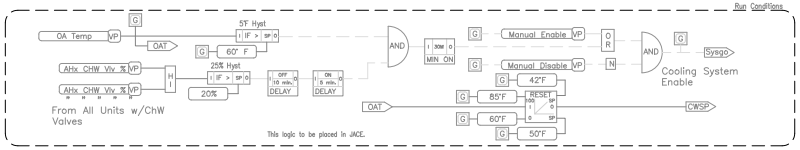

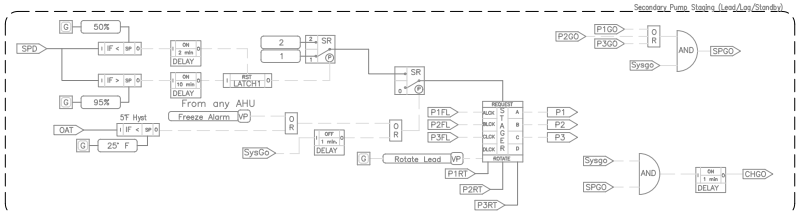

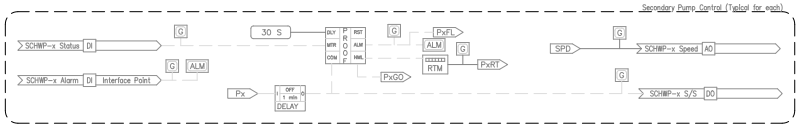

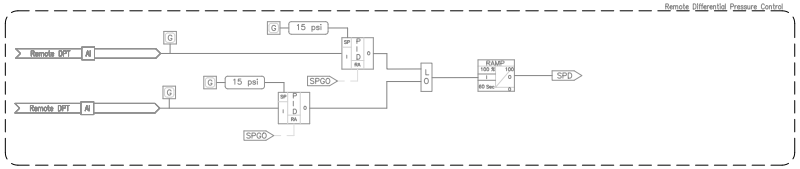

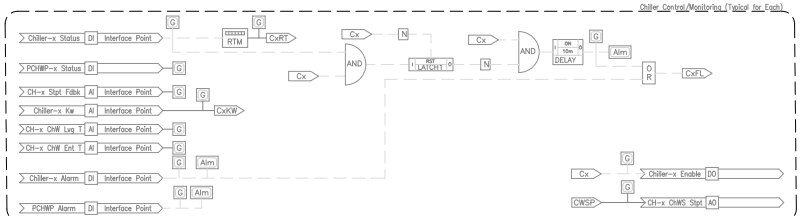

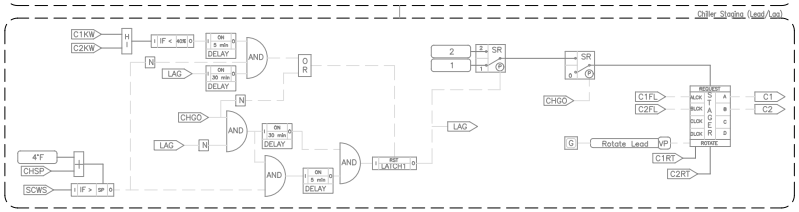

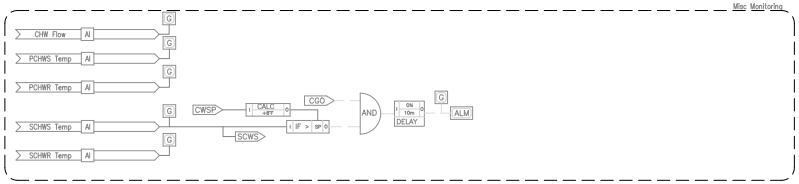

ELECTRIC LADDER DIAGRAM

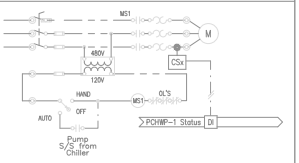

TYPICAL PRIMARY CHW PUMP STARTER

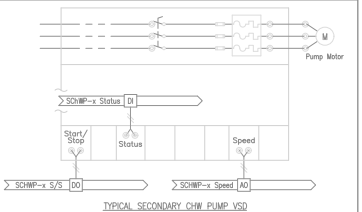

TYPICAL SECONDARY CHW PUMP VSD

DESIGNER NOTES:

1. USE WRITTEN SEQUENCES FOR CONSTRUCTION DOCUMENTS. LOGIC DIAGRAM IS FOR DESIGN REFERENCE ONLY.
2. IF EQUIPMENT DIAGRAM IS USED, EDIT POINTS SHOWN TO MATCH VERBIAGE OF SEQUENCE OF OPERATIONS.

WAKE COUNTY PUBLIC SCHOOL SYSTEM
1429 Rock Quarry Road, Suite 116
Raleigh, NC 27610
(919) 588-3808

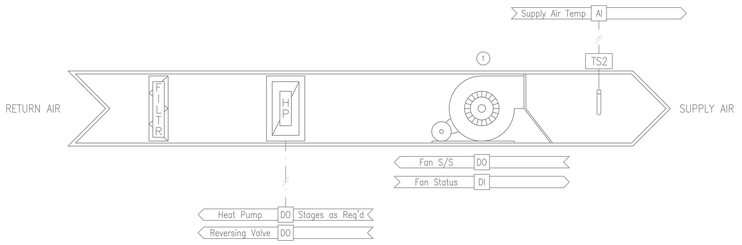

NOTES

1. Where applicable
2. Physical configuration of FCU to be determined by designer including draw-through or blow-through fan

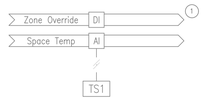

LOCATE AS SHOWN ON MECHANICAL PLANS

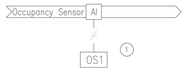

POINTS LIST

POINT DESCRIPTOR	POINT TYPE DI	AI	DO	AO	VP	TREND	ALARM	ALARM CONDITION	REMARKS
Space Temp		•				15 MIN			
Occupancy Sensor	•					COV			Where Applicable
Zone Override	•					COV			Where Applicable
Heat Pump			•			COV			
Reversing Valve			•			COV			
Fan S/S			•			COV			
Fan Status	•					COV			
Supply Air Temp		•				15 MIN			
Alarm	•					COV	•		

LOGIC VARIABLES

BINARY	ANALOG	DESCRIPTION
Occ		ON WHEN OCCUPIED MODE ACTIVE
RUN		ON WHEN FCU REQUESTED TO RUN
SGO		ON WHEN SUPPLY FAN IS PROVEN ON
HTG		ON WHEN ZONE REQUIRES HEATING
CLG		ON WHEN ZONE REQUIRES COOLING
HTP		ON WHEN THE HEAT PUMP COMPRESSOR IS ENABLED
	Temp	VARIABLE VALUE OF SPACE TEMPERATURE
	HSP	VARIABLE VALUE OF THE HEATING SPACE TEMPERATURE SETPOINT
	CSP	VARIABLE VALUE OF THE COOLING SPACE TEMPERATURE SETPOINT

Run Conditions

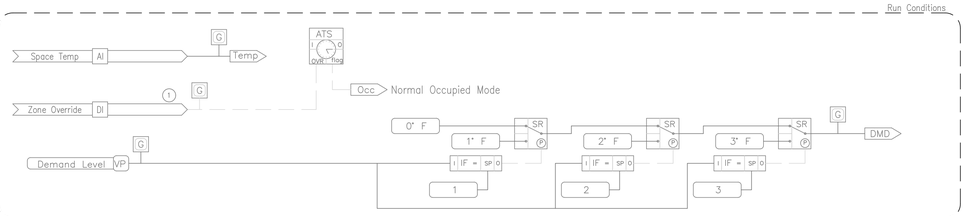

Setpoints

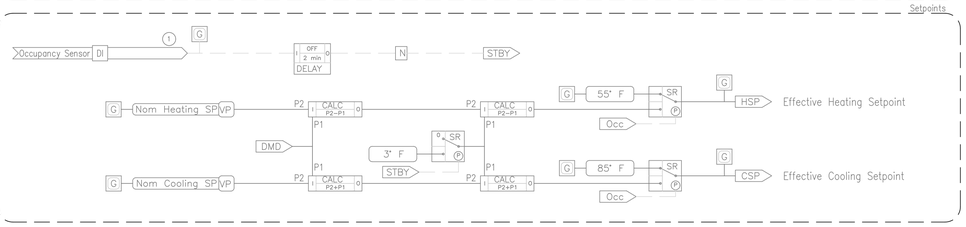

Fan Control

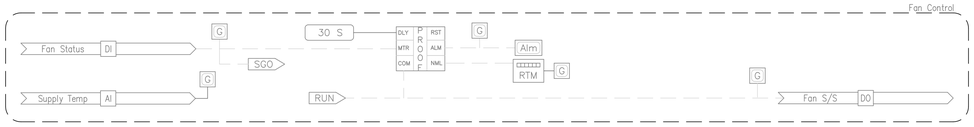

Heat Pump Control

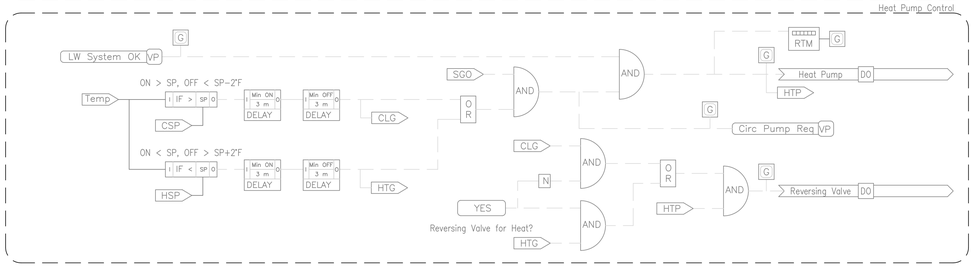

ELECTRIC LADDER DIAGRAMS

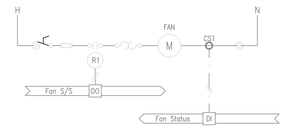

DESIGNER NOTES:

1. USE WRITTEN SEQUENCES FOR CONSTRUCTION DOCUMENTS. LOGIC DIAGRAM IS FOR DESIGN REFERENCE ONLY.
2. IF EQUIPMENT DIAGRAM IS USED, EDIT POINTS SHOWN TO MATCH VERBIAGE OF SEQUENCE OF OPERATIONS.

WAKE COUNTY PUBLIC SCHOOL SYSTEM
111 Corning Road,Suite 190
Cary, NC 27518
(919) 588-3608

NOTES

1. Where applicable.
2. Physical configuration of VAV TU to be determined by designer.
3. Provide graphic link to the parent AHU from the primary AHU temperature displayed on the BAS graphic.

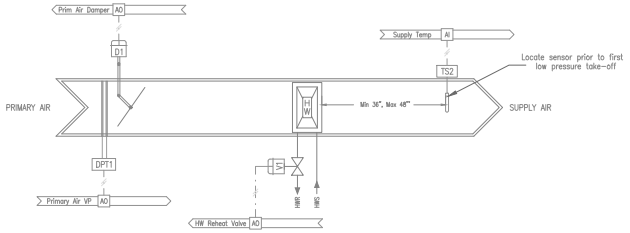

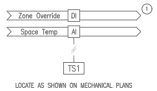

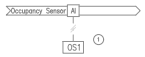

POINTS LIST

POINT DESCRIPTOR	POINT TYPE DI	AI	DO	AO	VP	TREND	ALARM	ALARM CONDITION	REMARKS
Space Temp		•				15 MIN			
Prim Air Damper				•		COV			
Primary Air VP		•				15 MIN			
Supply Air Temp		•				15 MIN			
HW Reheat Valve				•		COV			
Setpoint Adjust		•				COV			
Zone Override	•								

LOGIC VARIABLES

BINARY	ANALOG	DESCRIPTION
Occ		ON WHEN OCCUPIED MODE ACTIVE
RUN		ON WHEN UNIT COMMANDED TO START
STBY		ON WHEN ZONE IS IN THE "STANDBY" MODE (OCCUPANCY SENSOR NOT ON)
	Temp	VARIABLE VALUE OF SPACE TEMPERATURE
	HSP	VARIABLE CALCULATED VALUE OF ACTIVE HEATING SETPOINT
	CSP	VARIABLE CALCULATED VALUE OF ACTIVE COOLING SETPOINT
	CCSP	VARIABLE CALCULATED VALUE OF CURRENT CFM SETPOINT
	CPCT	VARIABLE CALCULATED VALUE OF THE COOLING LOOP OUTPUT (COOLING %)
	HPCT	VARIABLE CALCULATED VALUE OF THE HEATING LOOP OUTPUT (HEATING %)
	PAT	VARIABLE VALUE OF THE PRIMARY AIR TEMPERATURE (PARENT AHU TEMP)
	DMD	VARIABLE VALUE OF THE DEMAND LEVEL SPACE TEMPERATURE SETPT OFFSET

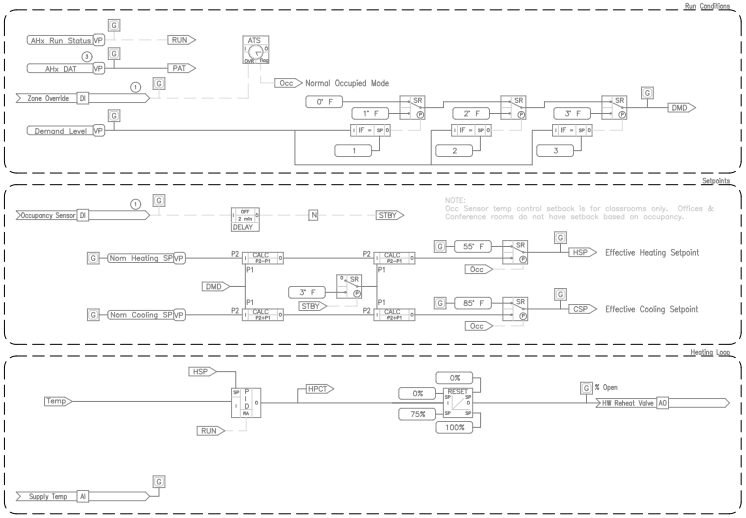

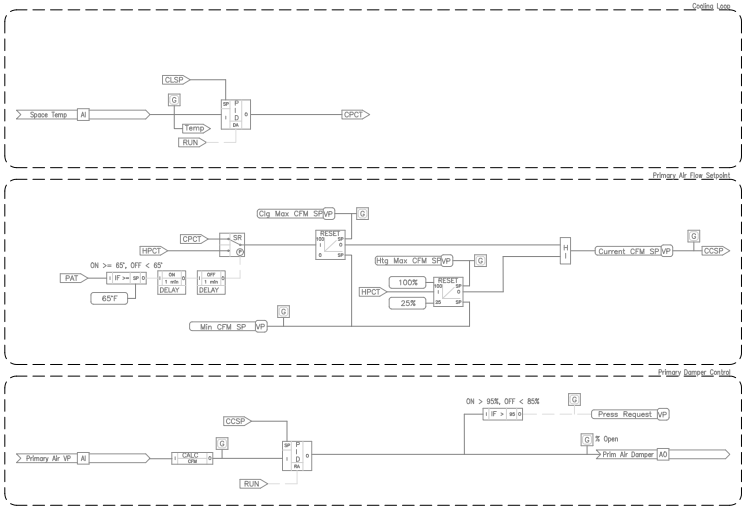

DESIGNER NOTES:

1. USE WRITTEN SEQUENCES FOR CONSTRUCTION DOCUMENTS. LOGIC DIAGRAM IS FOR DESIGN REFERENCE ONLY.
2. IF EQUIPMENT DIAGRAM IS USED, EDIT POINTS SHOWN TO MATCH VERBIAGE OF SEQUENCE OF OPERATIONS.

M4.22 Single Duct VAV Box (with HW Reheat Control)

SCALE: NONE

WAKE COUNTY PUBLIC SCHOOL SYSTEM
1429 Rock Quarry Road, Suite 116
Raleigh, NC 27610
(919) 588-3608

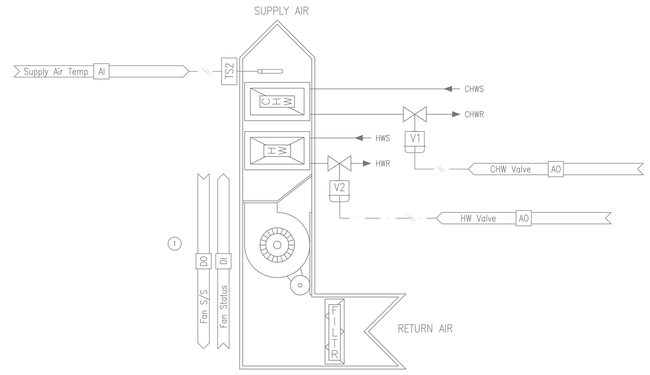

NOTES

1. Where applicable.
2. Physical configuration of FCU to be determined by designer including draw-through or blow-through fan.

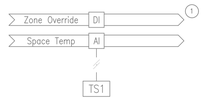

LOCATE AS SHOWN ON MECHANICAL PLANS

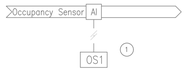

POINTS LIST

POINT DESCRIPTOR	POINT TYPE DI	AI	DO	AO	VP	TREND	ALARM	ALARM CONDITION	REMARKS
Space Temp		•				15 MIN			
Occupancy Sensor	•					COV			Where Applicable
Occ Override	•					COV			Where Applicable
CHW Valve				•		COV			
Supply Air Temp		•				15 MIN			
HW Valve				•		COV			
Fan S/S			•			COV			
Fan Status	•					COV	•		

LOGIC VARIABLES

BINARY	ANALOG	DESCRIPTION
Occ		ON WHEN OCCUPIED MODE ACTIVE
SBH		ON WHEN SETBACK HEATING MODE ACTIVE
SBC		ON WHEN SETBACK COOLING MODE ACTIVE
RUN		ON WHEN FCU REQUESTED TO RUN
SGO		ON WHEN SUPPLY FAN IS PROVEN ON
	Temp	VARIABLE VALUE OF SPACE TEMPERATURE

ELECTRIC LADDER DIAGRAMS

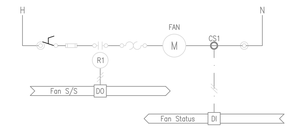

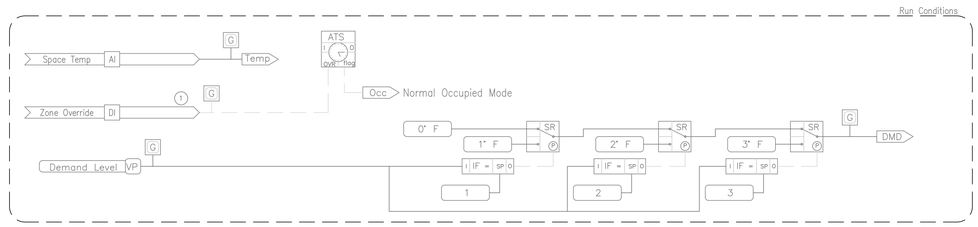

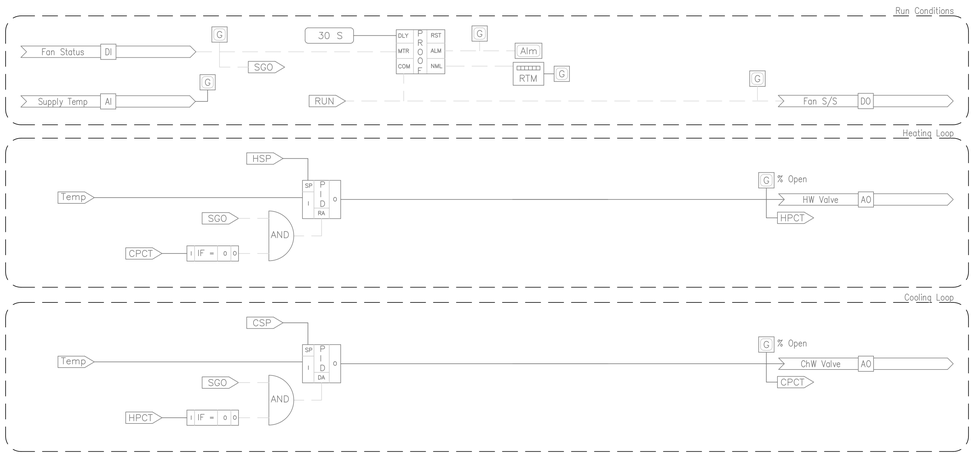

DESIGNER NOTES:

1. USE WRITTEN SEQUENCES FOR CONSTRUCTION DOCUMENTS. LOGIC DIAGRAM IS FOR DESIGN REFERENCE ONLY.
2. IF EQUIPMENT DIAGRAM IS USED, EDIT POINTS SHOWN TO MATCH VERBIAGE OF SEQUENCE OF OPERATIONS.

WAKE COUNTY PUBLIC SCHOOL SYSTEM
111 Corning Road,Suite 190
Cary, NC 27518
(919) 588-3608

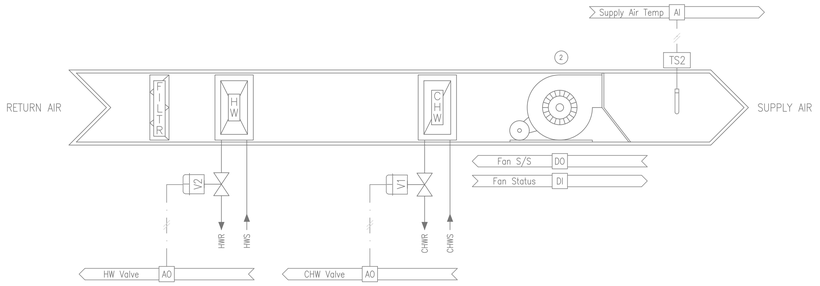



NOTES

1. Where applicable
2. Physical configuration of FCU to be determined by designer including draw-through or blow-through fan

POINTS LIST

POINT DESCRIPTOR	POINT TYPE DI	AI	DO	AO	VP	TREND	ALARM	ALARM CONDITION	REMARKS
Space Temp		•				15 MIN			
Occupancy Sensor	•					COV			Where Applicable
Occ Override	•					COV			Where Applicable
CHW Valve				•		COV			
Supply Air Temp		•				15 MIN			
HW Valve				•		COV			
Fan S/S			•			COV			
Fan Status	•					COV	•		

LOGIC VARIABLES

BINARY	ANALOG	DESCRIPTION
Occ		ON WHEN OCCUPIED MODE ACTIVE
RUN		ON WHEN FCU REQUESTED TO RUN
SGO		ON WHEN SUPPLY FAN IS PROVEN ON
	Temp	VARIABLE VALUE OF SPACE TEMPERATURE

ELECTRIC LADDER DIAGRAMS

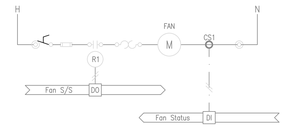

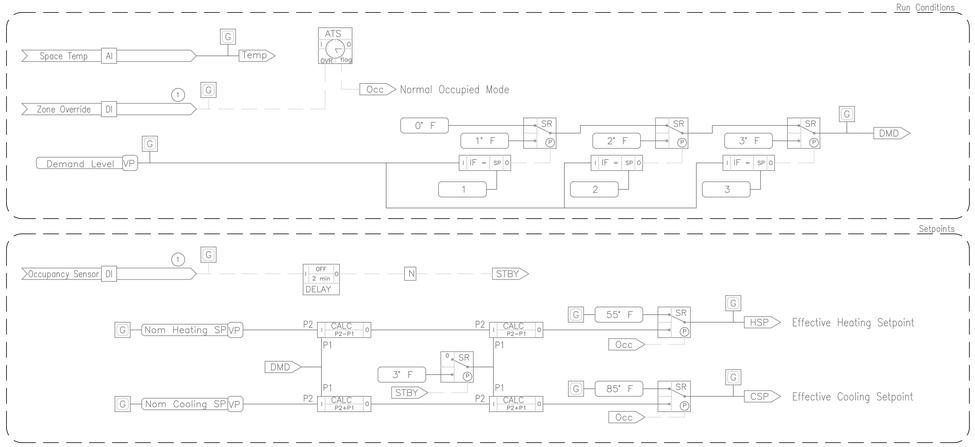

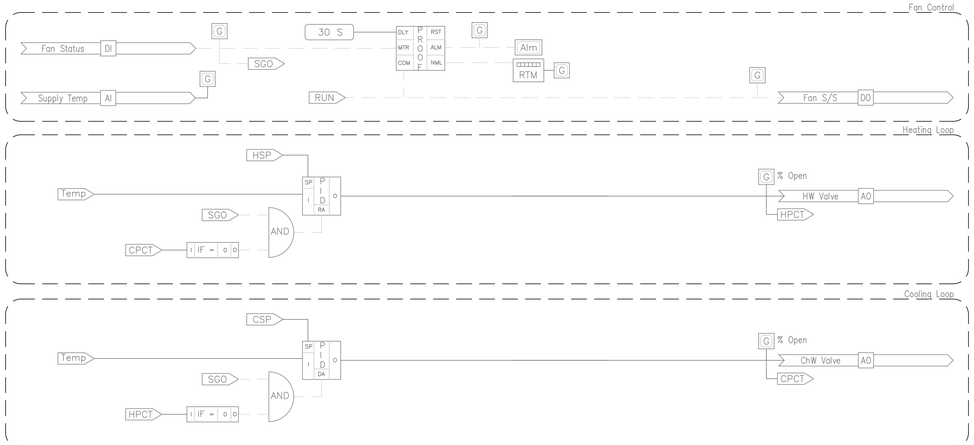

DESIGNER NOTES:

1. USE WRITTEN SEQUENCES FOR CONSTRUCTION DOCUMENTS. LOGIC DIAGRAM IS FOR DESIGN REFERENCE ONLY.
2. IF EQUIPMENT DIAGRAM IS USED, EDIT POINTS SHOWN TO MATCH VERBIAGE OF SEQUENCE OF OPERATIONS.

WAKE COUNTY PUBLIC SCHOOL SYSTEM
111 Corning Road,Suite 190
Cary, NC 27518
(919) 588-3608

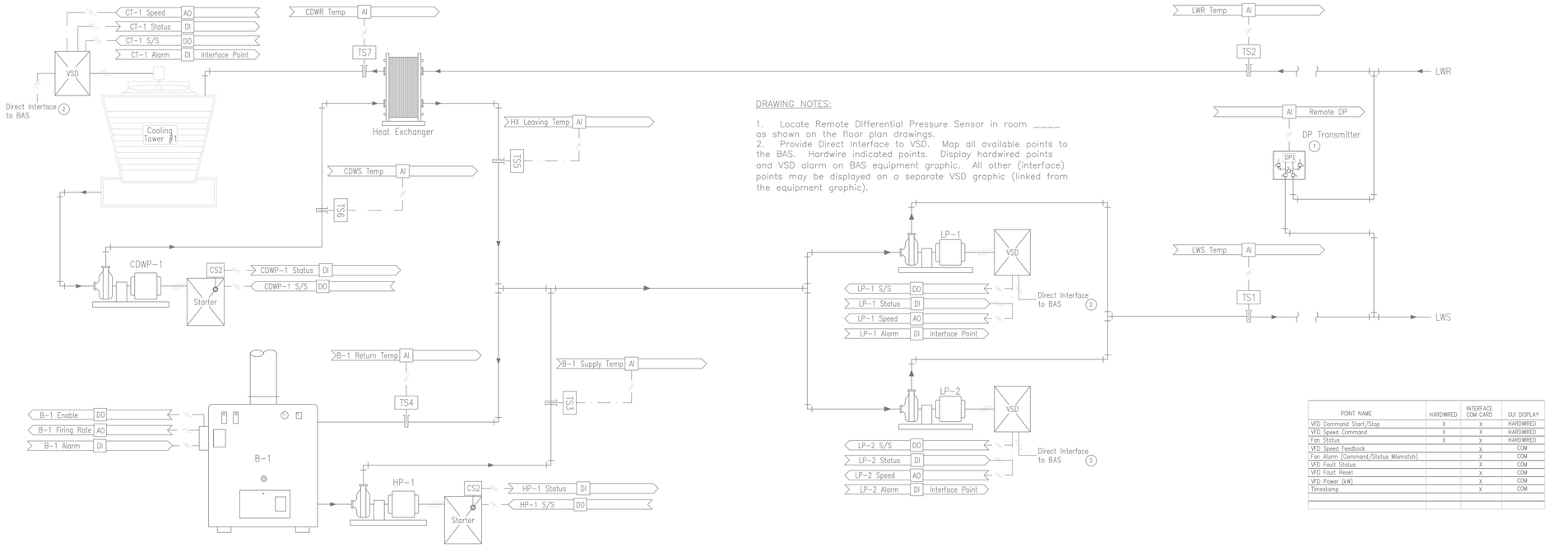

DRAWING NOTES:

1. Locate Remote Differential Pressure Sensor in room ____ as shown on the floor plan drawings.
2. Provide Direct Interface to VSD. Map all available points to the BAS. Hardwire indicated points. Display hardwired points and VSD alarm on BAS equipment graphic. All other (interface) points may be displayed on a separate VSD graphic (linked from the equipment graphic).

POINT NAME	HARDWIRED	INTERFACE COM CARD	GUI DISPLAY
VFD Command Start/Stop	X	X	HARDWIRED
VFD Speed Command	X	X	HARDWIRED
Fan Status	X	X	HARDWIRED
VFD Speed Feedback		X	COM
Fan Alarm (Command/Status Mismatch)		X	COM
VFD Fault Status		X	COM
VFD Fault Reset		X	COM
VFD Power (kW)		X	COM
Timestamp		X	COM

Water Source Heat Pump Loop – Coolng tower w/CV pump, Condensing Boiler

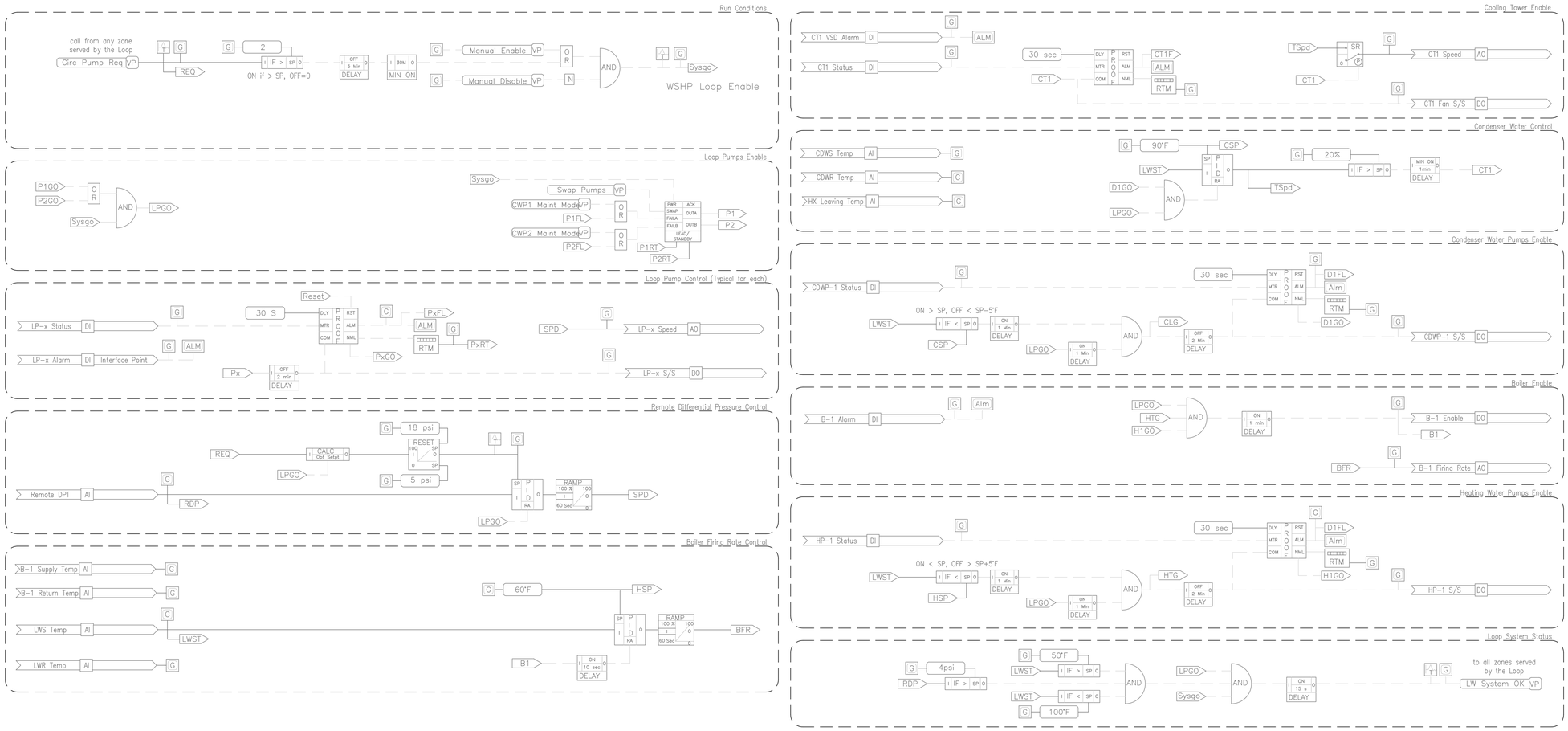

DESIGNER NOTES:

1. USE WRITTEN SEQUENCES FOR CONSTRUCTION DOCUMENTS. LOGIC DIAGRAM IS FOR DESIGN REFERENCE ONLY.
2. IF EQUIPMENT DIAGRAM IS USED, EDIT POINTS SHOWN TO MATCH VERBIAGE OF SEQUENCE OF OPERATIONS.

POINTS LIST

POINT DESCRIPTOR	POINT TYPE DI	AI	DO	AO	VP	TREND	ALARM	ALARM CONDITION	REMARKS
CDWP-1 S/S			•			COV			
CDWP-x Status	•					COV	•	NOT EQUAL TO COMMAND	
LP-x S/S			•			COV			
LP-x Status	•					COV			
LP-x Speed				•		COV			
LP-x Alarm	•					COV	•		Interface Point
CT-1 S/S			•			COV			
CT-1 Status	•					COV			
CT-1 Alarm	•					COV	•		Interface Point
CT-1 Speed				•		COV			
LWS Temp		•				15 MIN			
LWR Temp		•				15 MIN			
CDWS Temp		•				15 MIN			
CDWR Temp		•				15 MIN			
B-1 Firing Rate				•		15 MIN			
B-1 Enable			•			COV			
B-1 Alarm	•					COV	•		
HP-1 S/S			•			COV			
HP-1 Status	•					COV	•	NOT EQUAL TO COMMAND	
B-1 Supply Temp		•				15 MIN			
B-1 Return Temp		•				15 MIN			
HX Leaving Temp		•				15 MIN			
Remote DP		•				15 MIN			
Outdoor Temp		•				15 MIN			
Outdoor Humidity		•				15 MIN			
Outdoor Enthalpy		•				15 MIN			

LOGIC VARIABLES

BINARY	ANALOG	DESCRIPTION
Sysgo		ON WHEN LOOP WATER SYSTEM IS REQUESTED TO RUN
Reset		ON WHEN USER RESETS ALL LATCHING ALARMS ON THE UNIT (TOGGLE POINT)
Px		ON WHEN LOOP PUMP Px IS REQUESTED TO RUN
PxGO		ON WHEN LOOP PUMP Px IS REQUESTED TO RUN AND STATUS IS PROVEN
PxFL		ON WHEN LOOP PUMP Px IS IS ASSESSED AS FAILED
D1GO		ON WHEN CONDENSER PUMP IS REQUESTED TO RUN AND STATUS IS PROVEN
H1GO		ON WHEN BOILER PUMP IS REQUESTED TO RUN AND STATUS IS PROVEN
LPGO		ON WHEN EITHER LOOP PUMP IS REQUESTED AND STATUS IS PROVEN
HTG		ON WHEN THE LOOP REQUIRES HEATING
CLG		ON WHEN THE LOOP REQUIRES COOLING
CT1		ON WHEN COOLING TOWER 1 IS ENABLED
B1		ON WHEN BOILER 1 IS ENABLED
	PxRT	TOTALIZED VALUE OF LOOP PUMP Px'S RUNTIME
	RDP	VARIABLE VALUE OF THE REMOTE DIFFERENTIAL PRESSURE
	TSpd	VARIABLE CALCULATED VALUE OF CT FAN PID LOOP OUTPUT (SPEED)
	SPD	VARIABLE CALCULATED VALUE OF REMOTE DP PID LOOP OUTPUT (SPEED)
	HSP	VARIABLE VALUE OF LOOP WATER SUPPLY TEMPERATURE HEATING SETPOINT
	CSP	VARIABLE VALUE OF LOOP WATER SUPPLY TEMPERATURE COOLING SETPOINT
	LWST	VARIABLE VALUE OF LOOP WATER SUPPLY TEMPERATURE
	BFR	VARIABLE CALCULATED VALUE OF BOILER FIRING RATE

ELECTRIC LADDER DIAGRAM

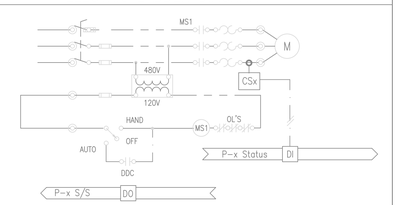

Typical Pump Starter

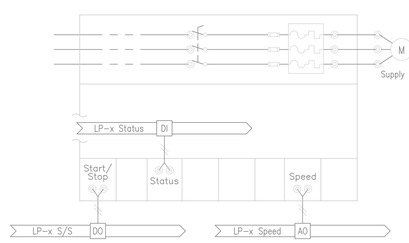

TYPICAL LOOP PUMP VSD (Typical for Cooling Tower Fan)

WAKE COUNTY PUBLIC SCHOOL SYSTEM
111 Corning Road,Suite 190
Cary, NC 27518
(919) 588-3608

NOTES:

1. REFER TO SPECIFICATIONS FOR CONTROL AND BALANCING VALVE TYPES.

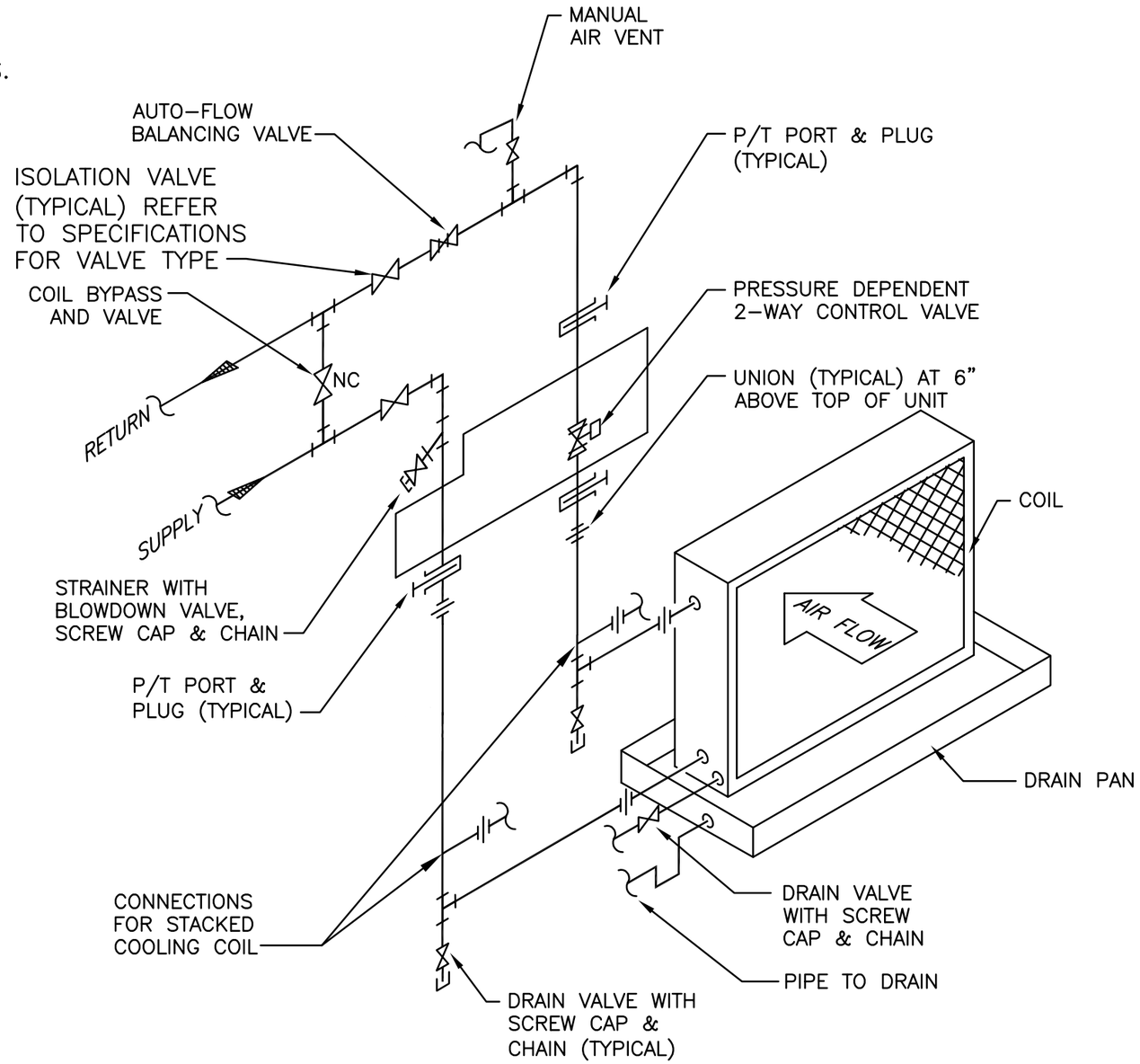

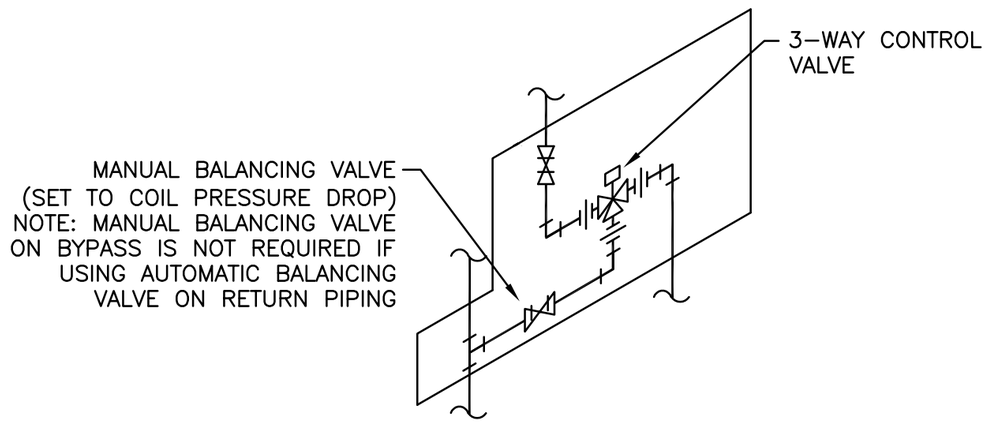

M1.01

AIR HANDLING UNIT COIL DETAIL

SCALE: NONE

WAKE COUNTY PUBLIC SCHOOL SYSTEM
111 Corning Road,Suite 190
Cary, NC 27518
(919) 588-3608

WAKE COUNTY PUBLIC SCHOOL SYSTEM
111 Corning Road,Suite 190
Cary, NC 27518
(919) 588-3608

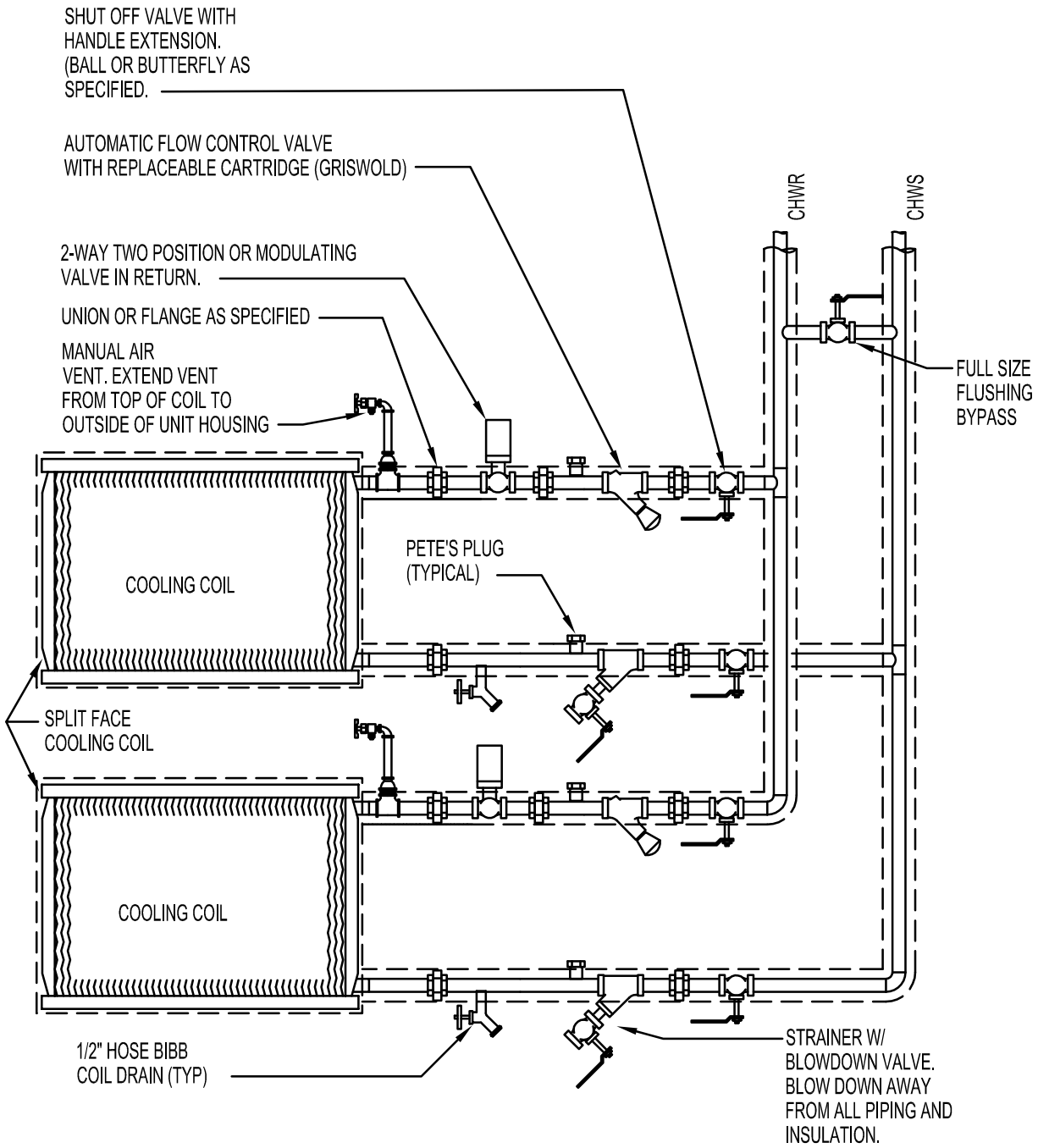

M1.02

SPLIT FACE COIL DETAIL

SCALE: NONE

WAKE COUNTY PUBLIC SCHOOL SYSTEM
111 Corning Road,Suite 190
Cary, NC 27518
(919) 588-3608

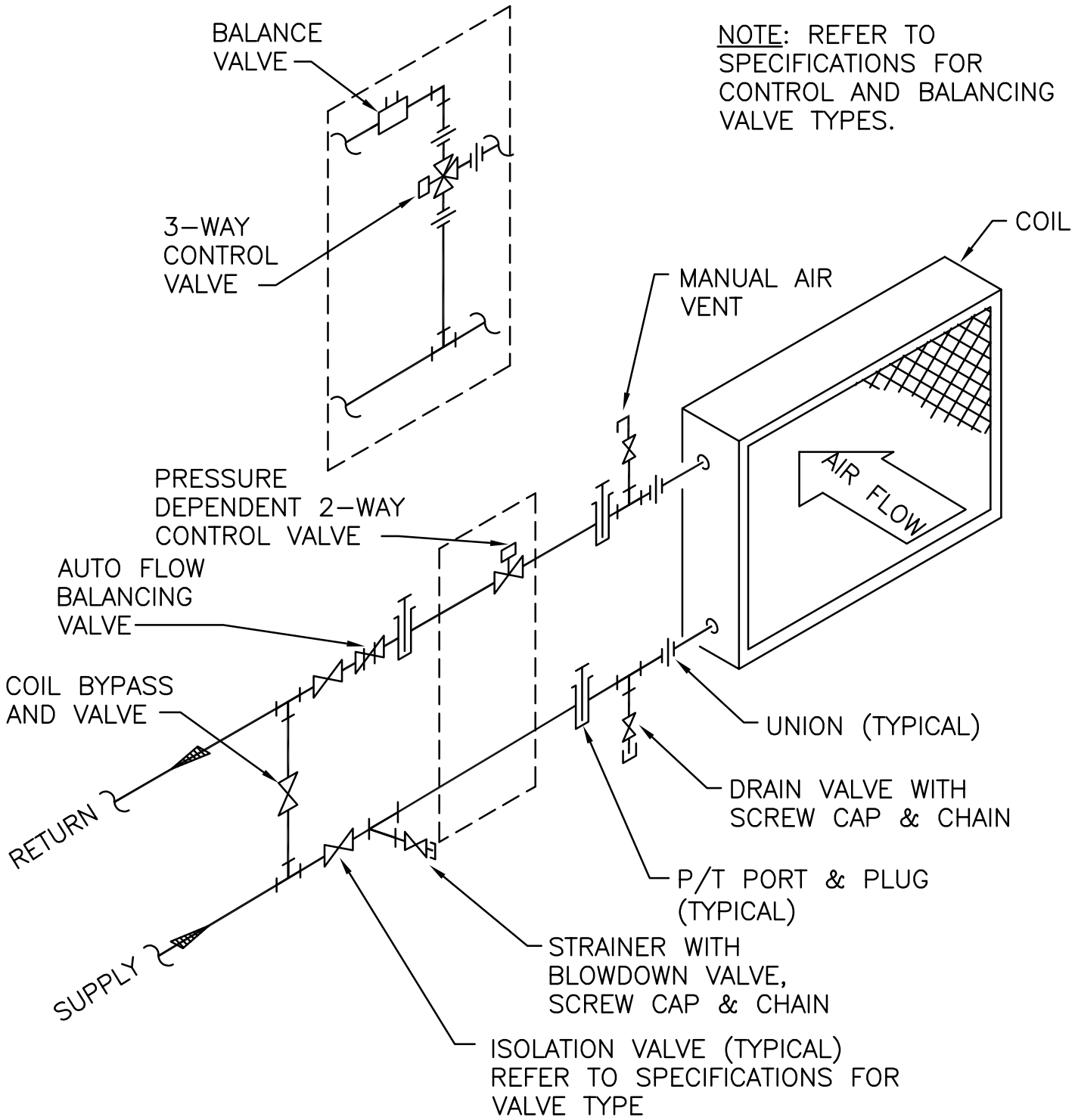

M1.03

TERMINAL UNIT COIL DETAIL

SCALE: NONE

WAKE COUNTY PUBLIC SCHOOL SYSTEM
111 Corning Road,Suite 190
Cary, NC 27518
(919) 588-3608

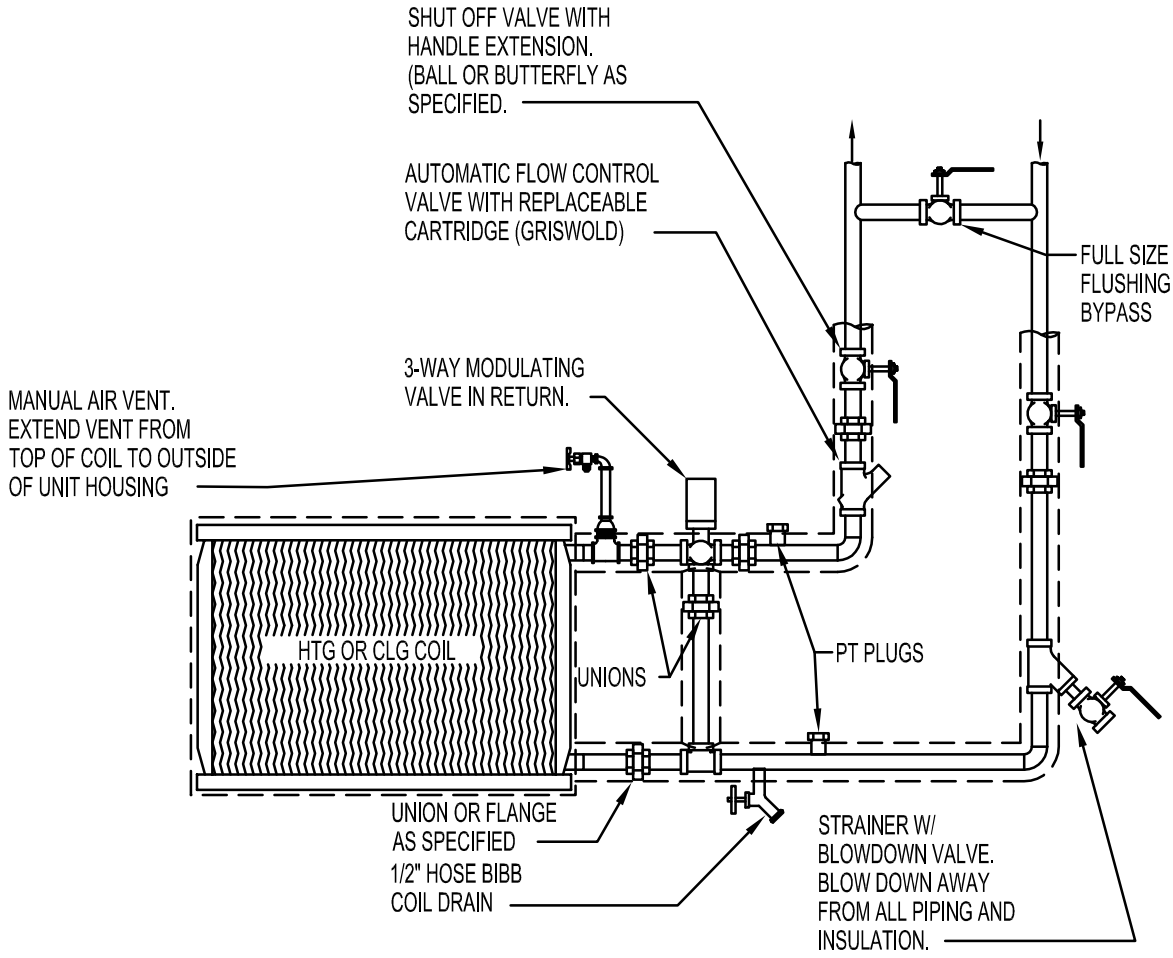

M1.04

THREE WAY COIL DETAIL

SCALE: NONE

WAKE COUNTY PUBLIC SCHOOL SYSTEM
111 Corning Road,Suite 190
Cary, NC 27518
(919) 588-3608

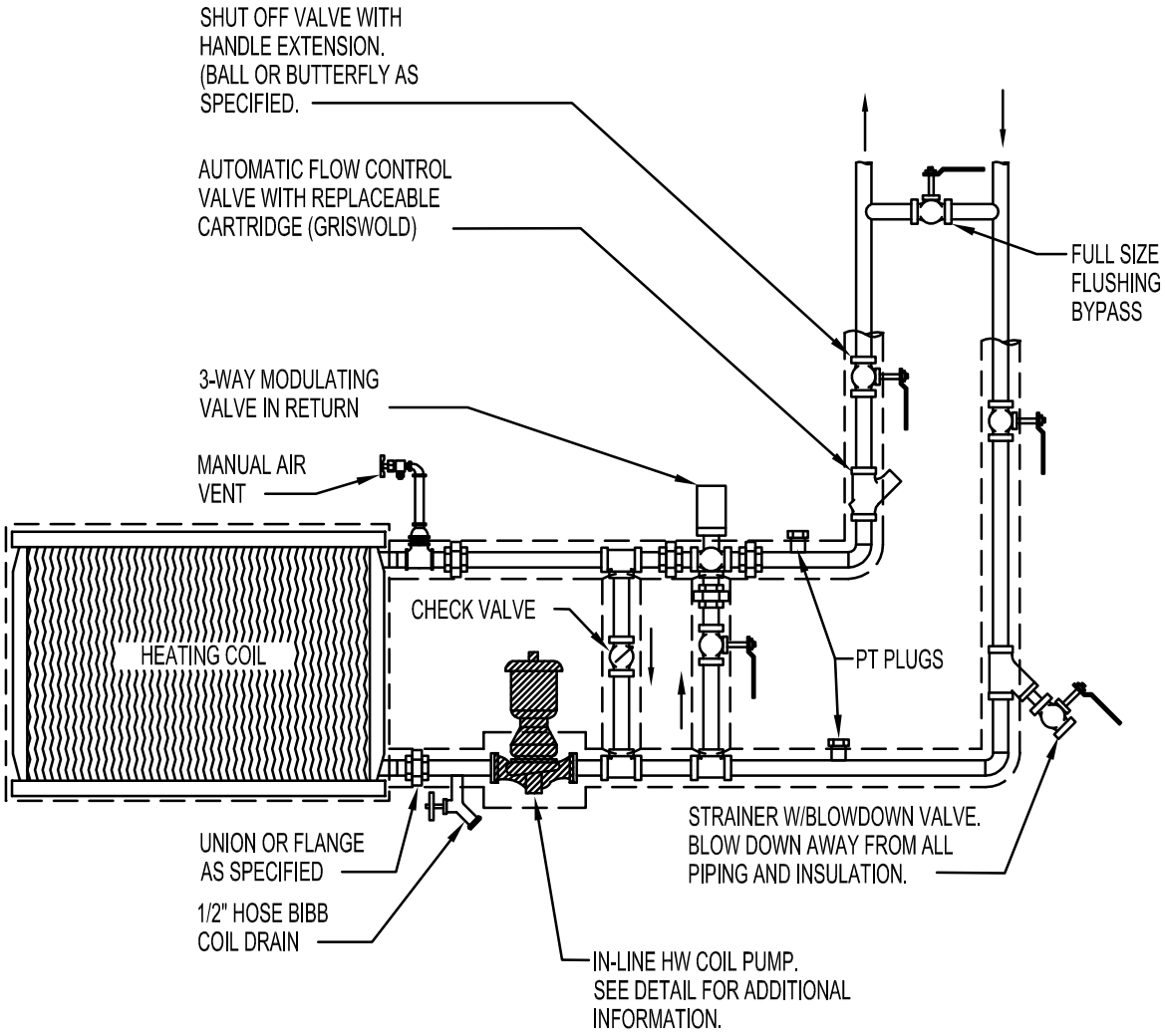

M1.05 THREE WAY COIL WITH PUMP DETAIL

SCALE: NONE

WAKE COUNTY PUBLIC SCHOOL SYSTEM
111 Corning Road,Suite 190
Cary, NC 27518
(919) 588-3608

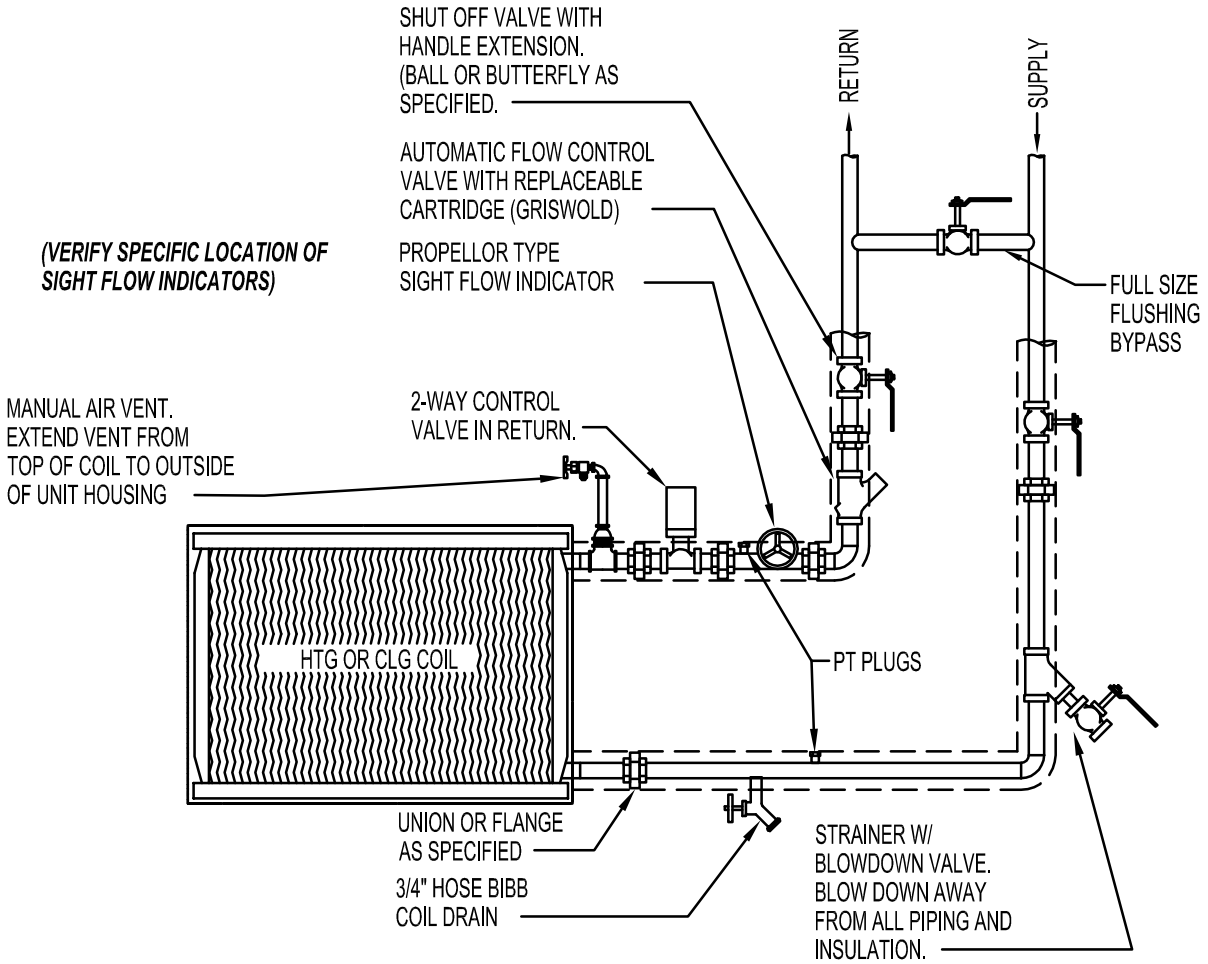

M1.06

TWO WAY COIL DETAIL

SCALE: NONE

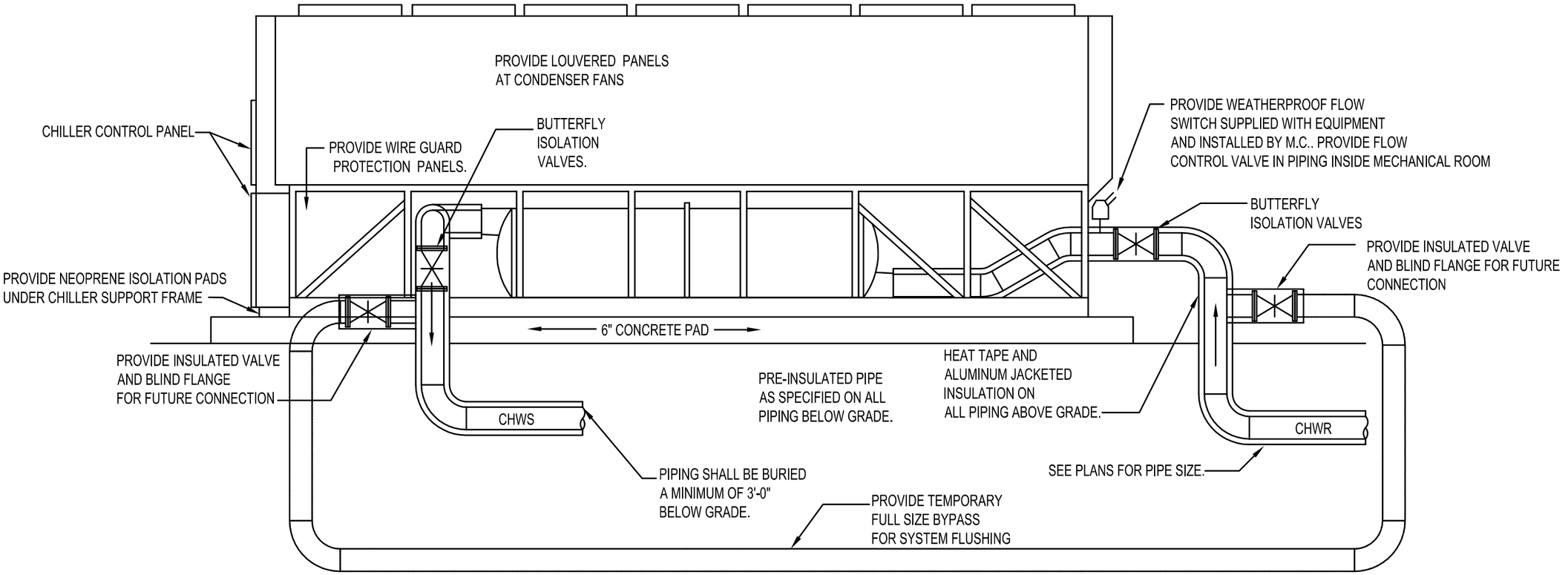

NOTES:

1. PROVIDE LOUVERED PANELS AT CONDENSER FANS.
2. PPR PIPE AS SPECIFIED ON ALL PIPING BELOW GRADE.

M1.11

AIR COOLED CHILLER DETAIL

SCALE: NONE

WAKE COUNTY PUBLIC SCHOOL SYSTEM
111 Corning Road,Suite 190
Cary, NC 27518
(919) 588-3608

WAKE COUNTY PUBLIC SCHOOL SYSTEM
111 Corning Road,Suite 190
Cary, NC 27518
(919) 588-3608

TRIPLE DUTY VALVES ARE NOT PERMITTED ON VARIABLE SPEED PUMPS

PROVIDE INSULATION ON CHILLED WATER PUMPS

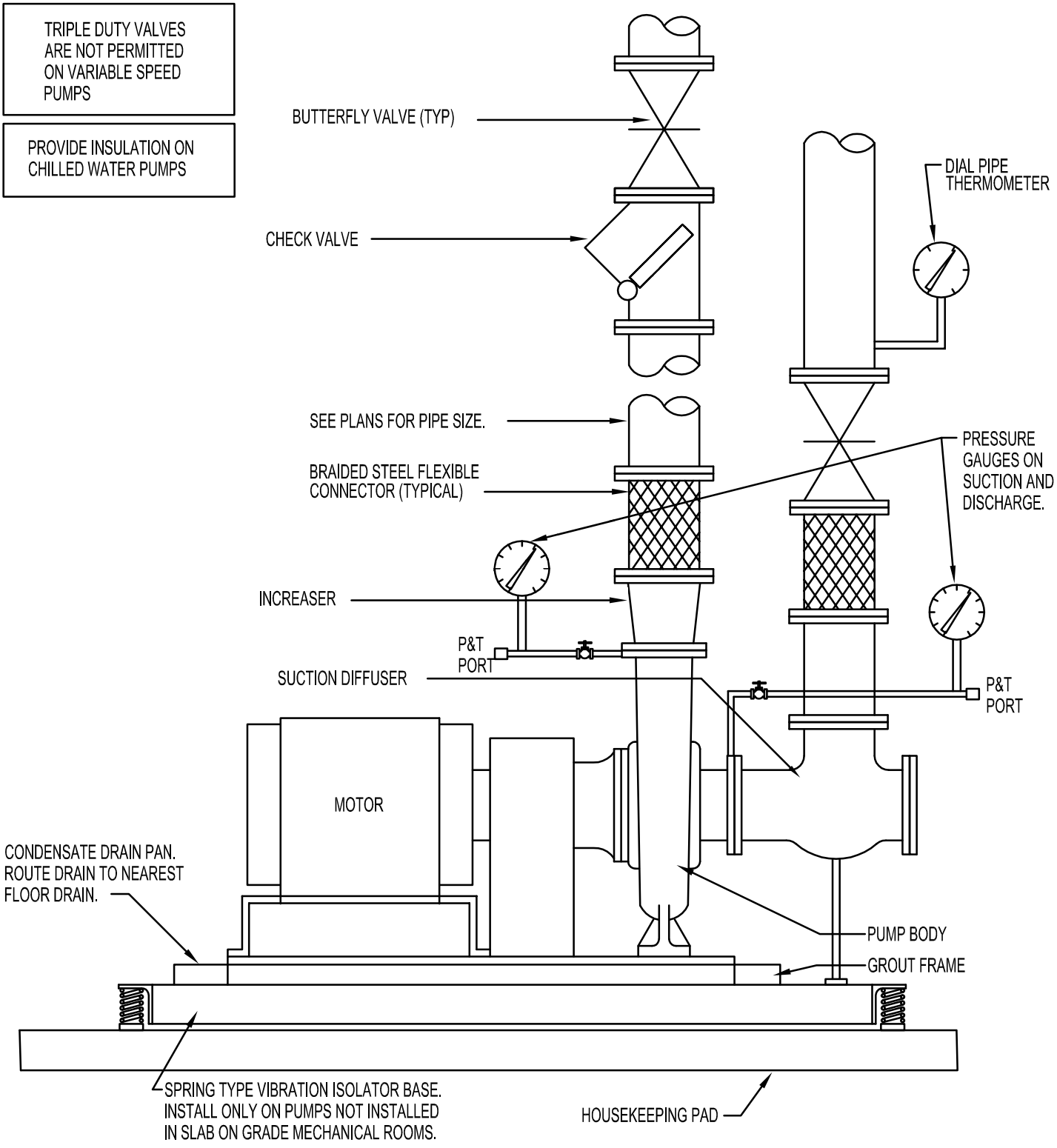

M1.12 BASE MOUNTED PUMP DETAIL

SCALE: NONE

WAKE COUNTY PUBLIC SCHOOL SYSTEM
111 Corning Road,Suite 190
Cary, NC 27518
(919) 588-3608

NOTES:

1. PROVIDE PALL MODEL 18FMO3-316L-2-IP OR EQUAL FILTER HOUSING FOR FILTRATION AND CHEMICAL FEED.
2. INSTALL FILTER AFTER CORROSION INHIBITOR IS IN SYSTEM
3. OPERATE WITH FLOW THROUGH FILTER
4. PROVIDE 3 SPARE FILTERS TURN OVER TO OWNERS REP AT TIME OF INITIAL FILTER INSTALLATION

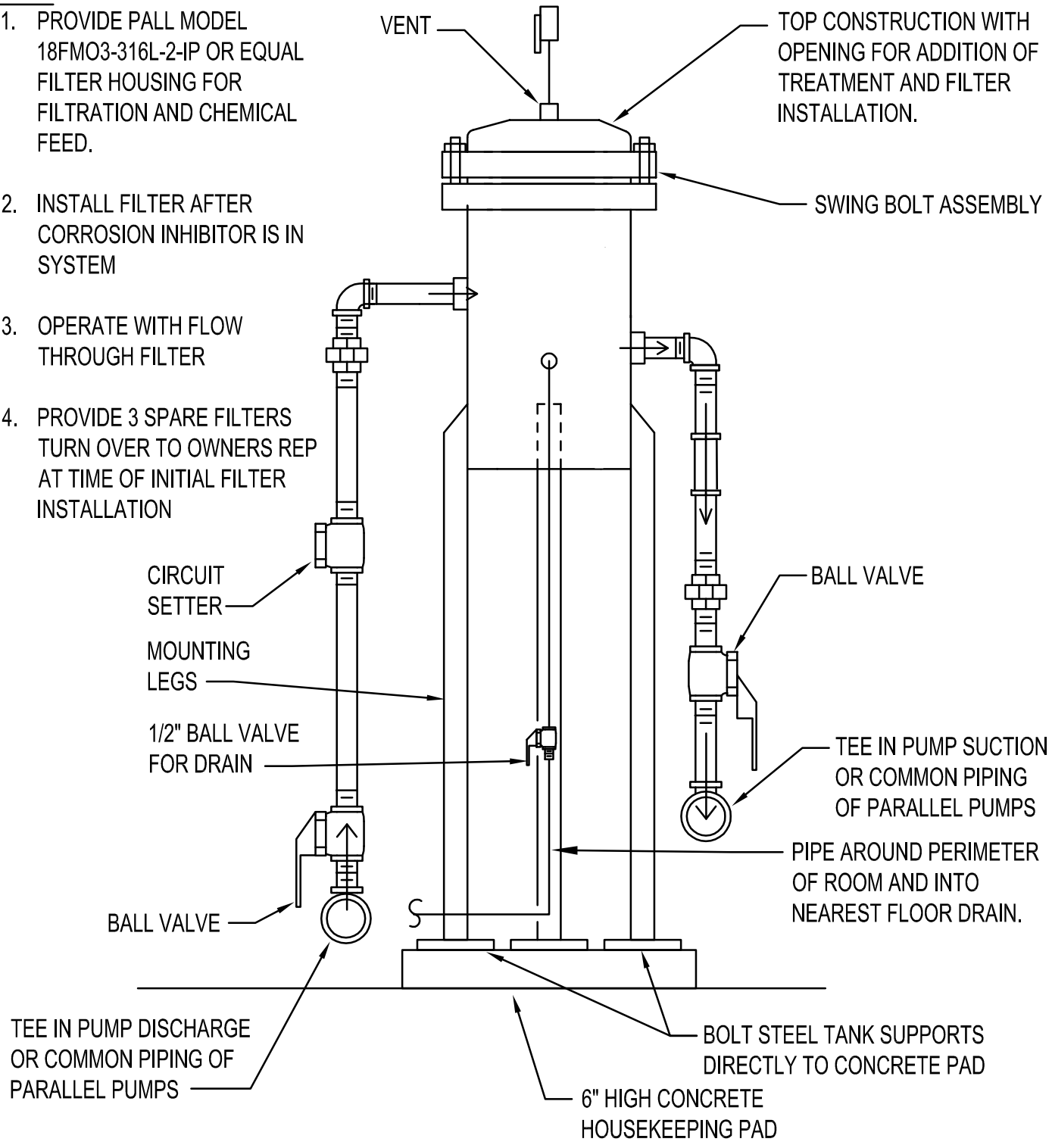

M1.13

CHEMICAL FEEDER DETAIL

SCALE: NONE

WAKE COUNTY PUBLIC SCHOOL SYSTEM
111 Corning Road,Suite 190
Cary, NC 27518
(919) 588-3608

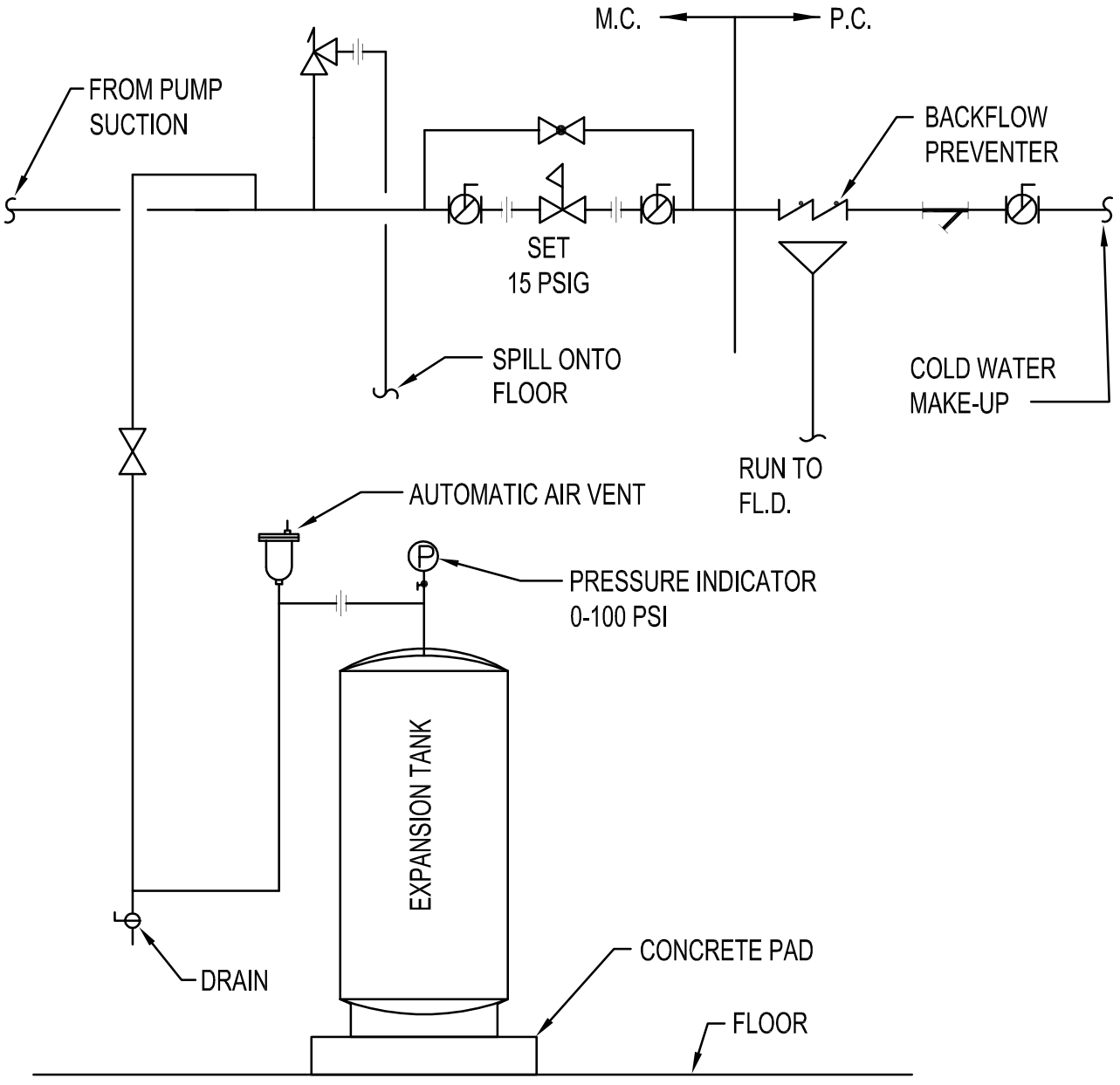

M1.14

EXPANSION TANK PIPING INSTALLATION DETAIL

SCALE: NONE

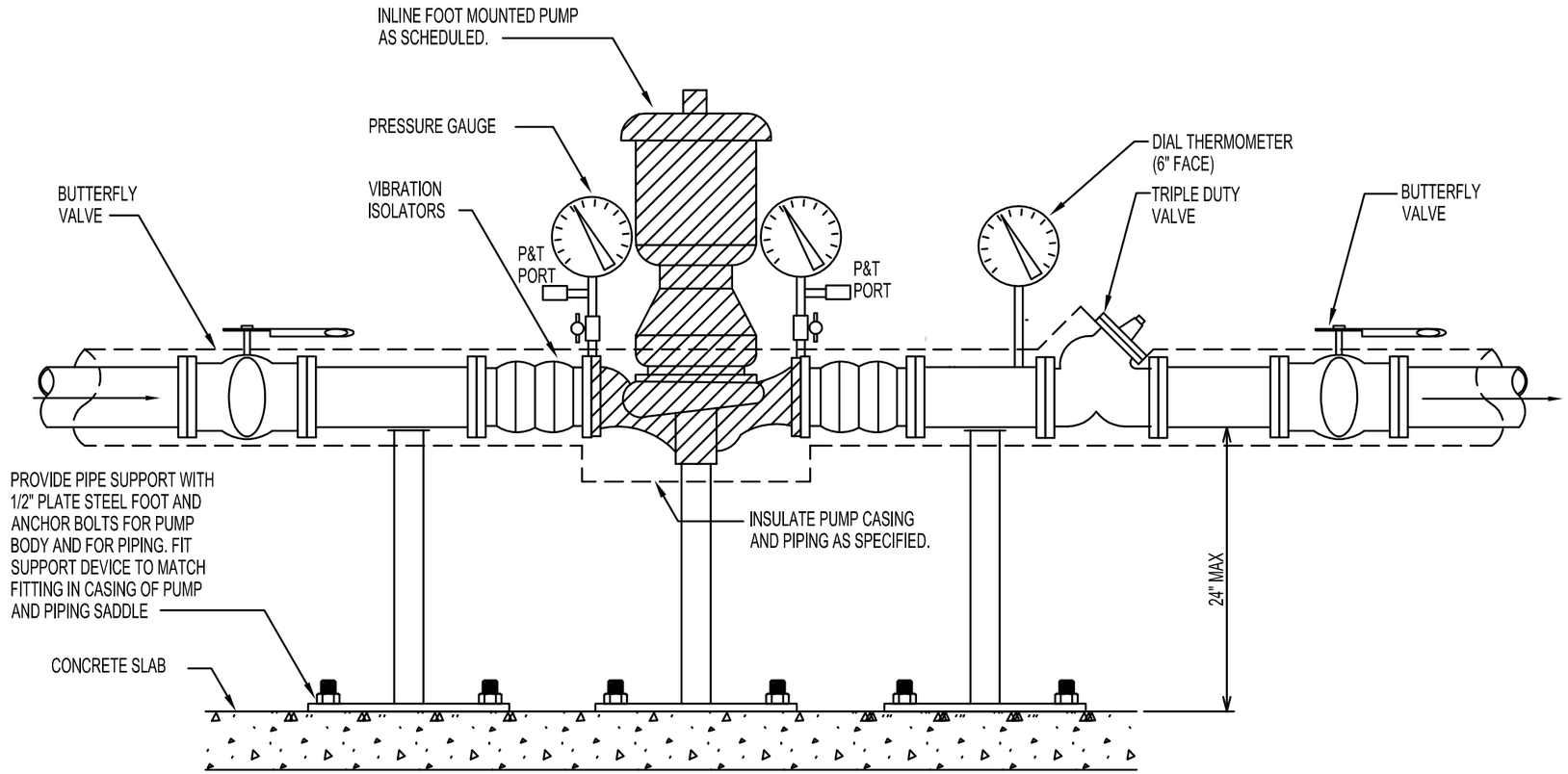

M1.15 FLOOR MOUNTED INLINE CIRCULATION PUMP DETAIL

SCALE: NONE

WAKE COUNTY PUBLIC SCHOOL SYSTEM
111 Corning Road,Suite 190
Cary, NC 27518
(919) 588-3608

WAKE COUNTY PUBLIC SCHOOL SYSTEM
111 Corning Road,Suite 190
Cary, NC 27518
(919) 588-3608

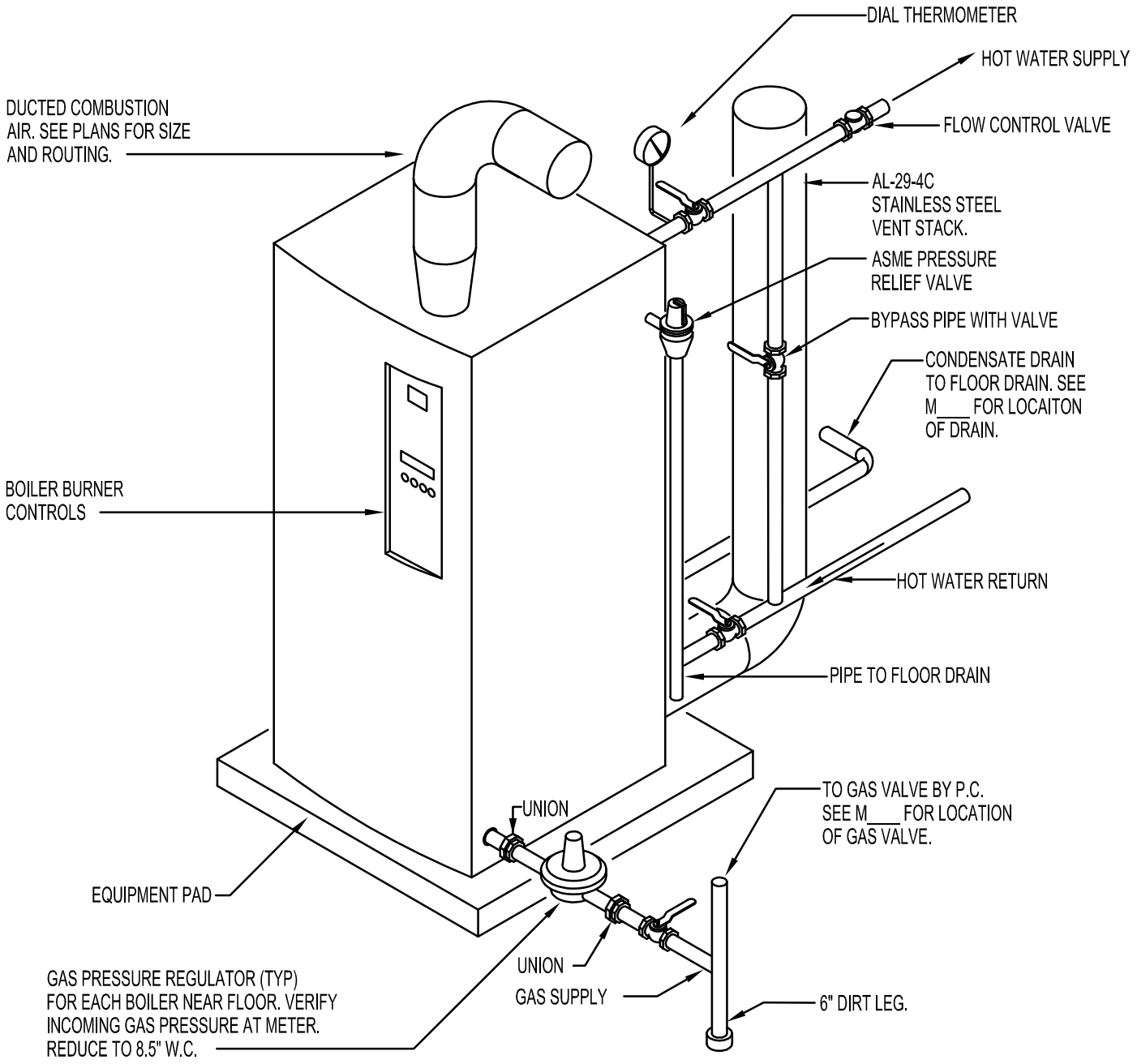

M1.16

LARGE CONDENSING BOILER DETAIL

SCALE: NONE

WAKE COUNTY PUBLIC SCHOOL SYSTEM
111 Corning Road,Suite 190
Cary, NC 27518
(919) 588-3608

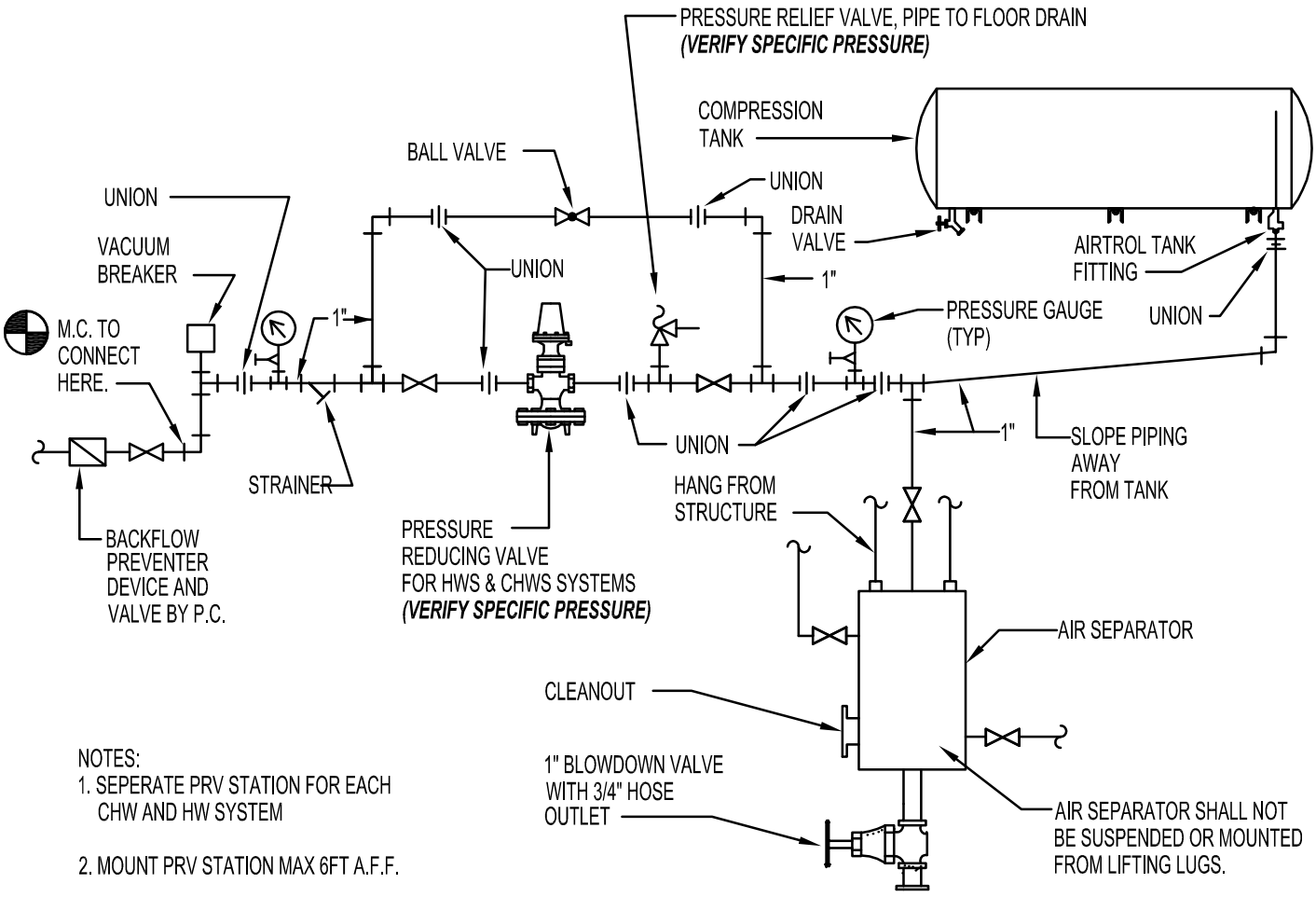

NOTES:
1. SEPERATE PRV STATION FOR EACH CHW AND HW SYSTEM

2. MOUNT PRV STATION MAX 6FT A.F.F.

M1.17

MAKEUP WATER STATION DETAIL

SCALE: NONE

WAKE COUNTY PUBLIC SCHOOL SYSTEM
111 Corning Road,Suite 190
Cary, NC 27518
(919) 850-1600

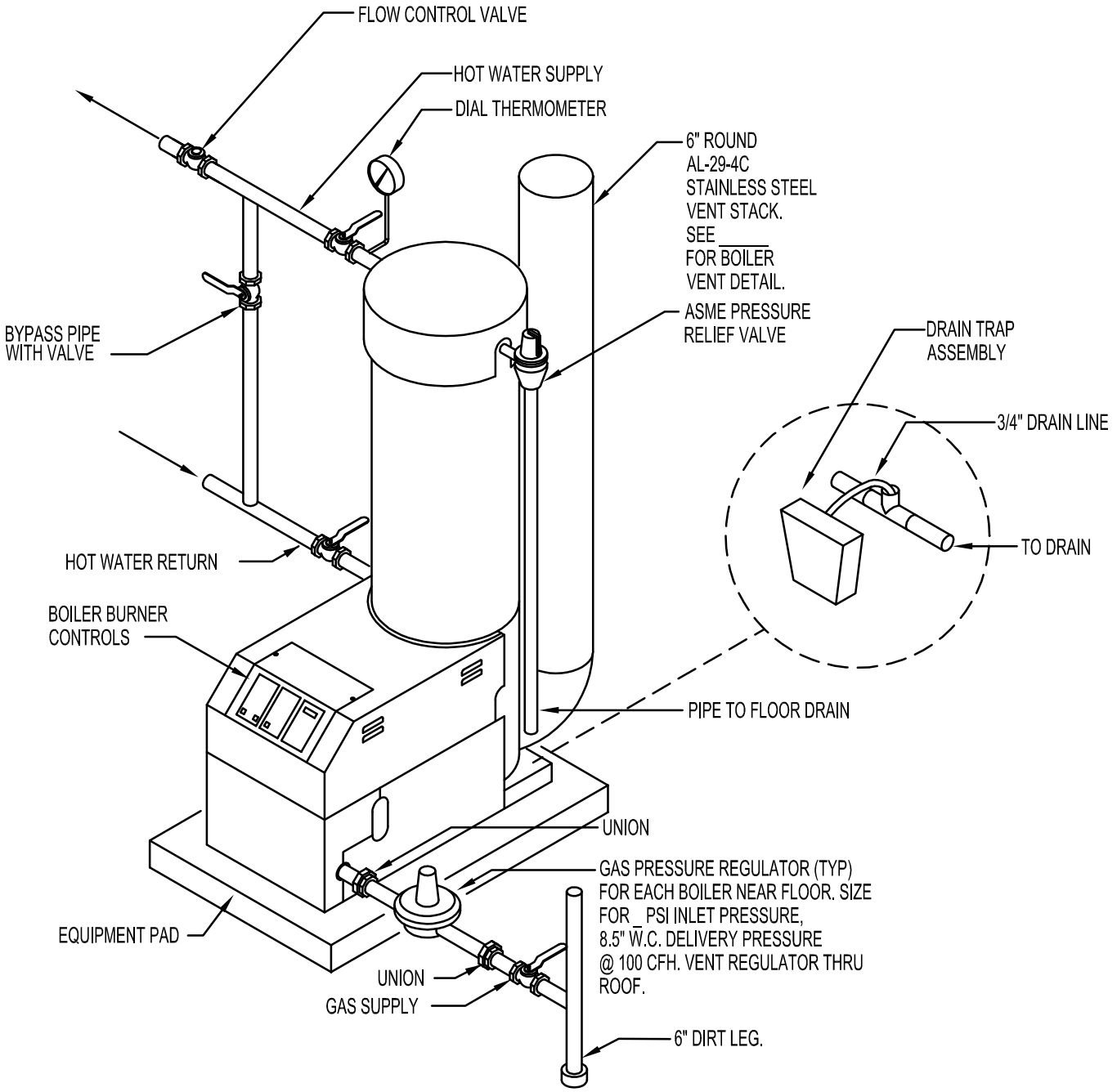

M1.18 SMALL BOILER DETAIL

SCALE: NONE

WAKE COUNTY PUBLIC SCHOOL SYSTEM
111 Corning Road,Suite 190
Cary, NC 27518
(919) 588-3608

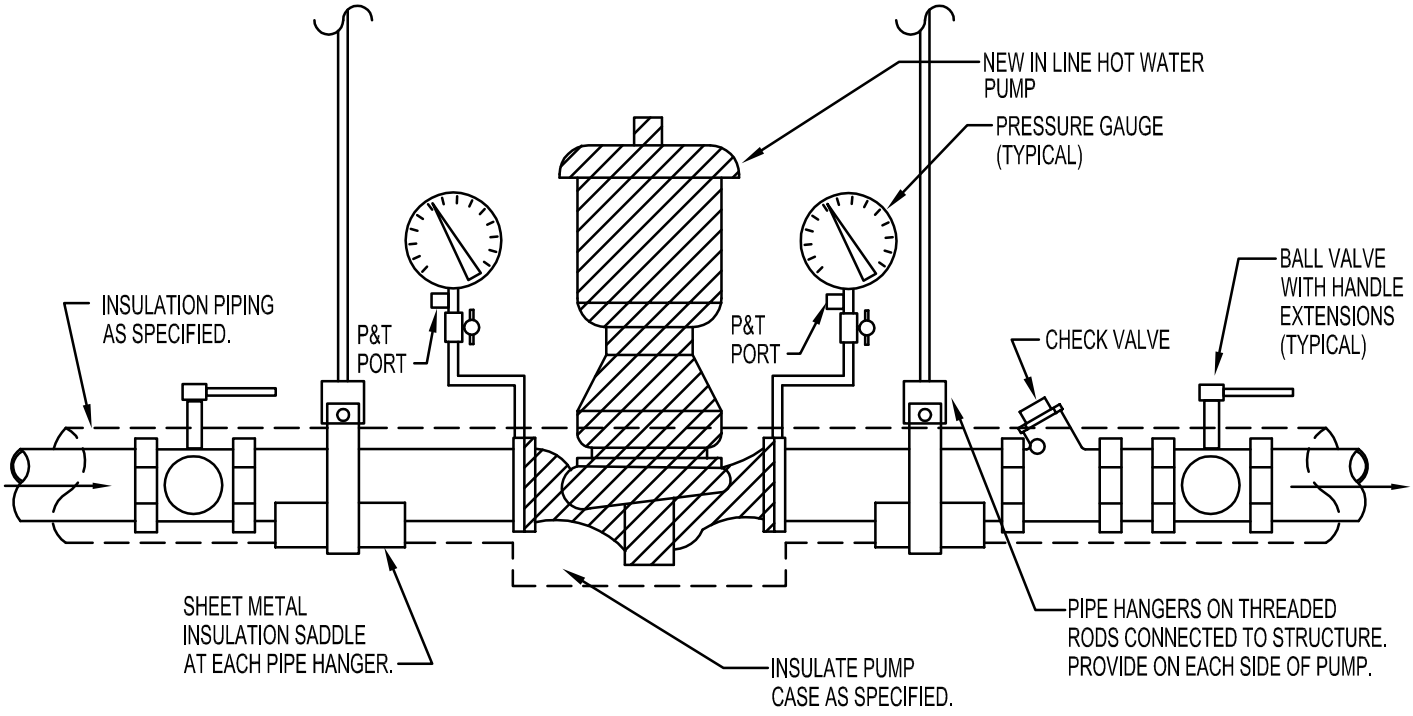

M1.19 SUSPENDED INLINE CIRCULATION PUMP DETAIL

SCALE: NONE

WAKE COUNTY PUBLIC SCHOOL SYSTEM
111 Corning Road,Suite 190
Cary, NC 27518
(919) 588-3608

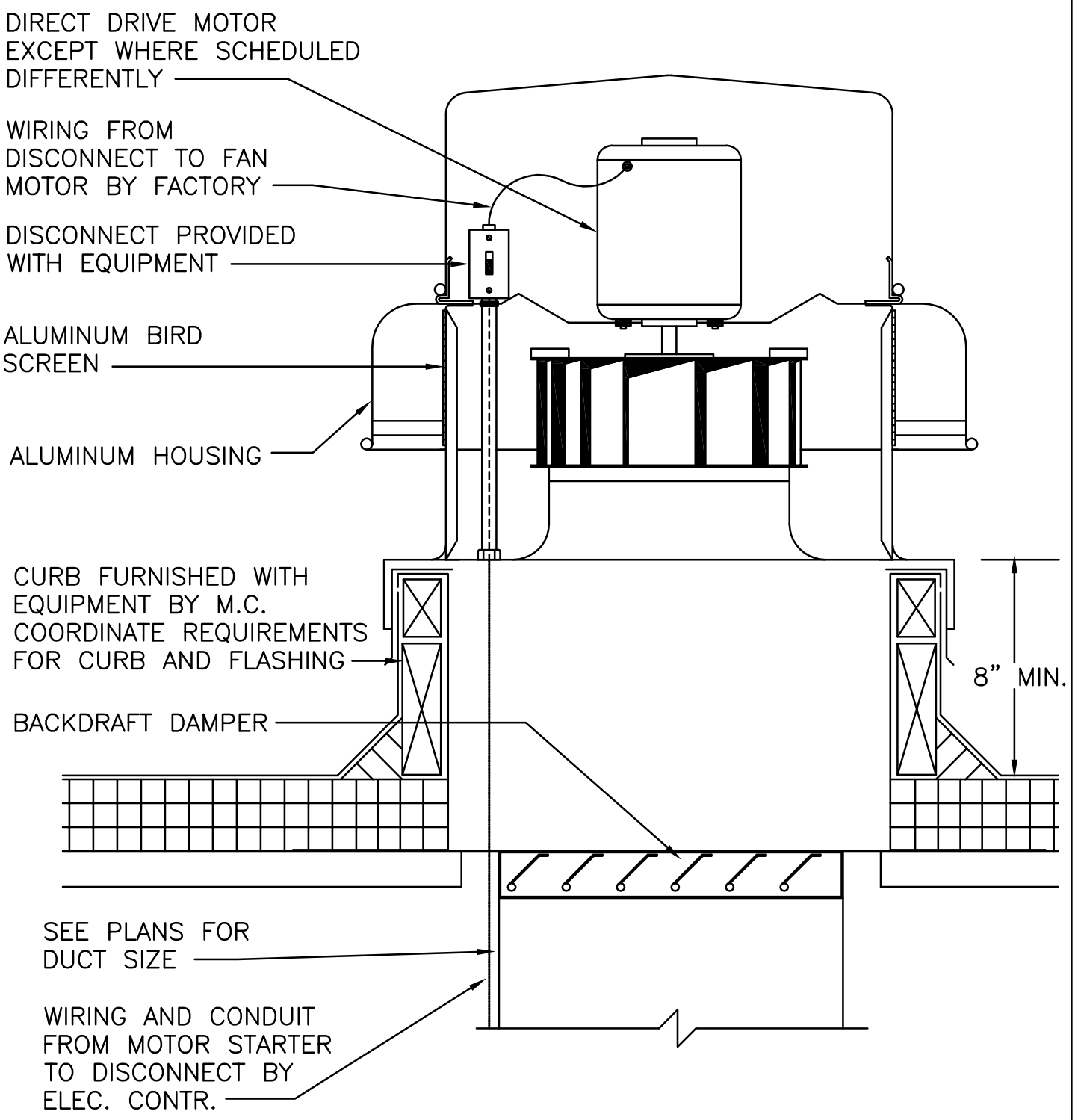

M1.20 ROOF MOUNTED FAN DETAIL

SCALE: NONE

WAKE COUNTY PUBLIC SCHOOL SYSTEM
111 Corning Road,Suite 190
Cary, NC 27518
(919) 588-3608

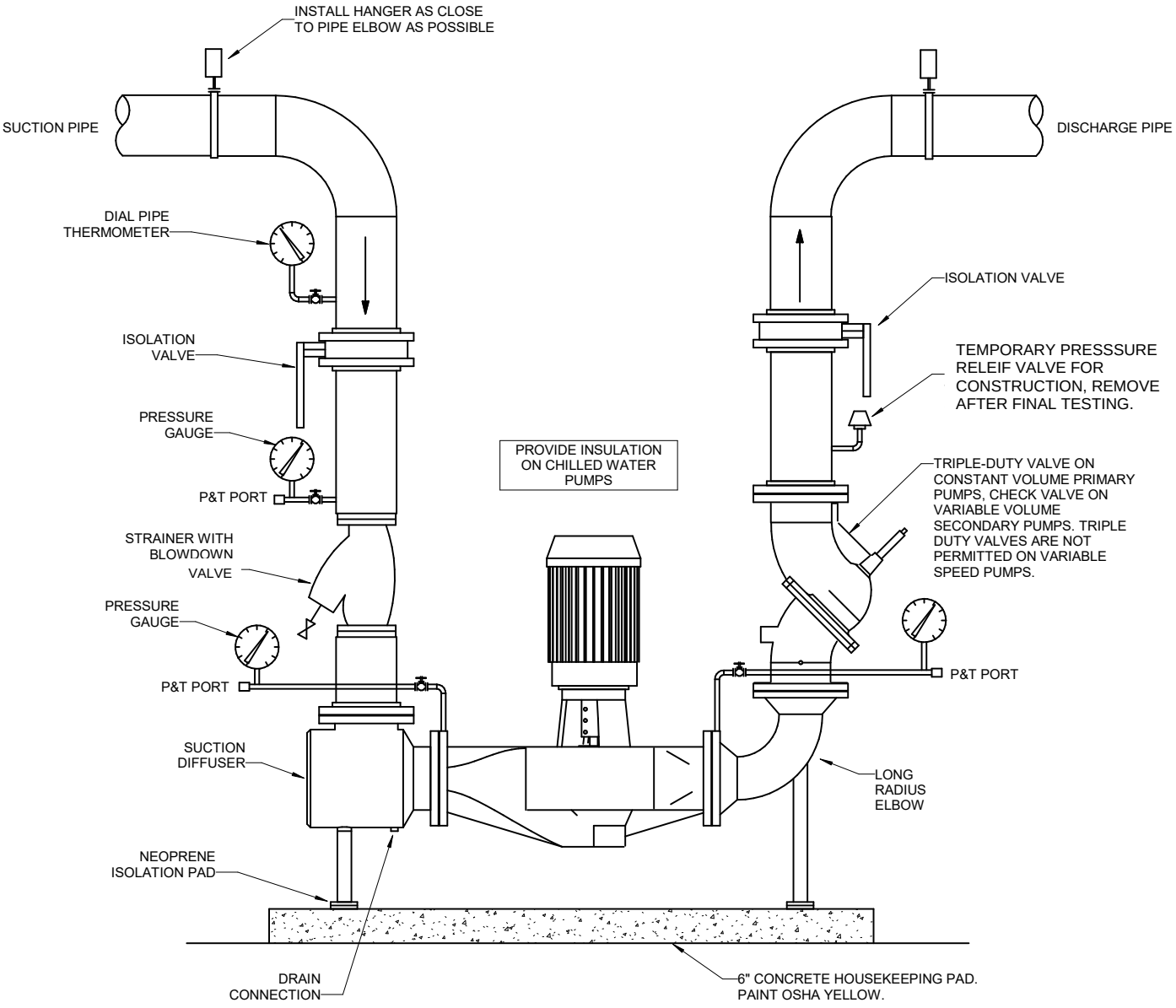

5 PAD MOUNTED VERTICAL PUMP INSTALLATION DETAIL

Scale: N.T.S.

M1.21	PAD MOUNTED VERTICAL PUMP INSTALLATION DETAIL
	SCALE: NONE

WAKE COUNTY PUBLIC SCHOOL SYSTEM
111 Corning Road,Suite 190
Cary, NC 27518
(919) 588-3608

NOTES:

1. LOCATE TRAP SO AS TO BE ACCESSIBLE FOR CLEANING.

2. H = FAN OUTLET PRESSURE (IN. W.C.) + 1 IN. MINIMUM

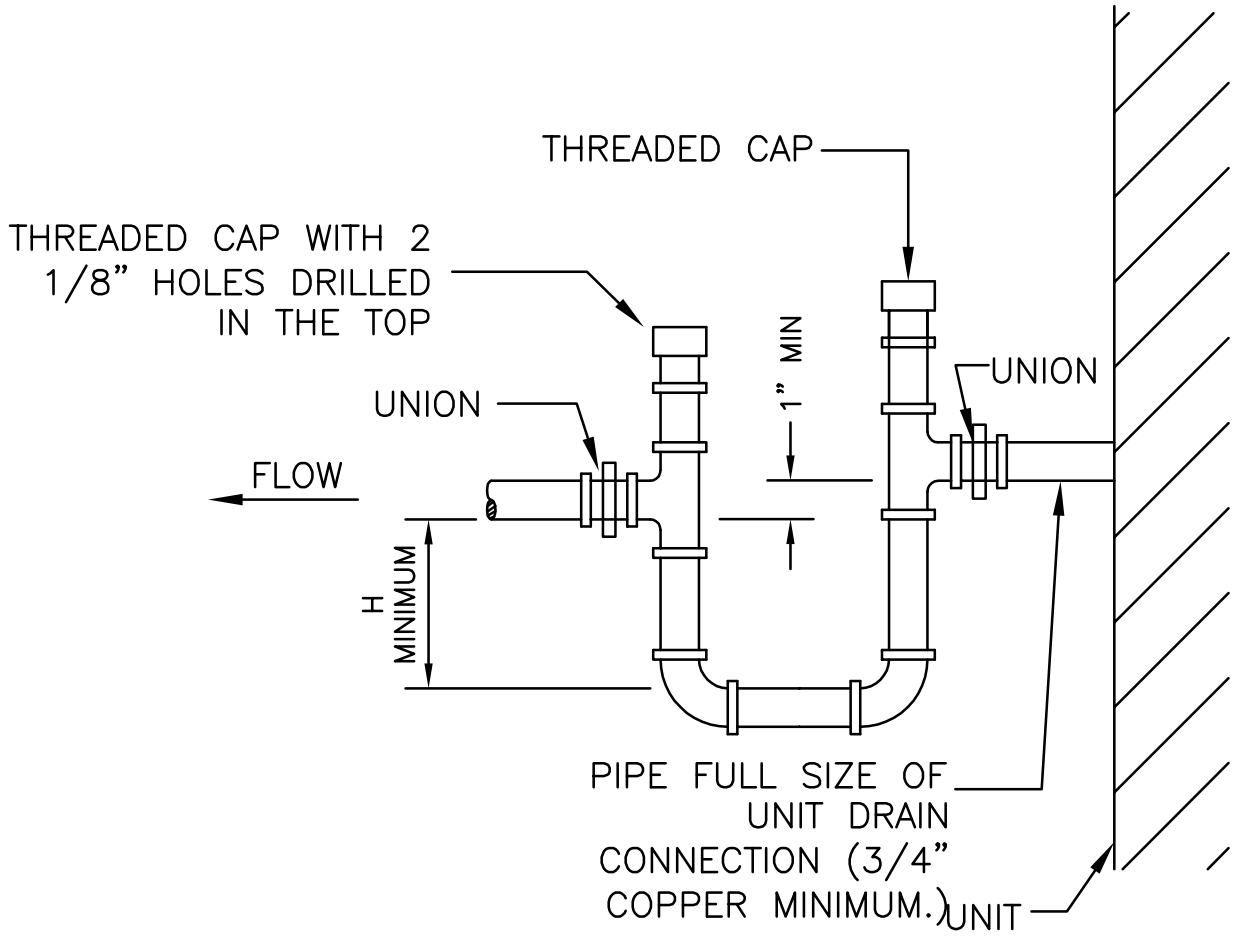

M1.31

BLOW-THRU CONDENSATE DRAIN DETAIL

SCALE: NONE

WAKE COUNTY PUBLIC SCHOOL SYSTEM
111 Corning Road,Suite 190
Cary, NC 27518
(919) 588-3608

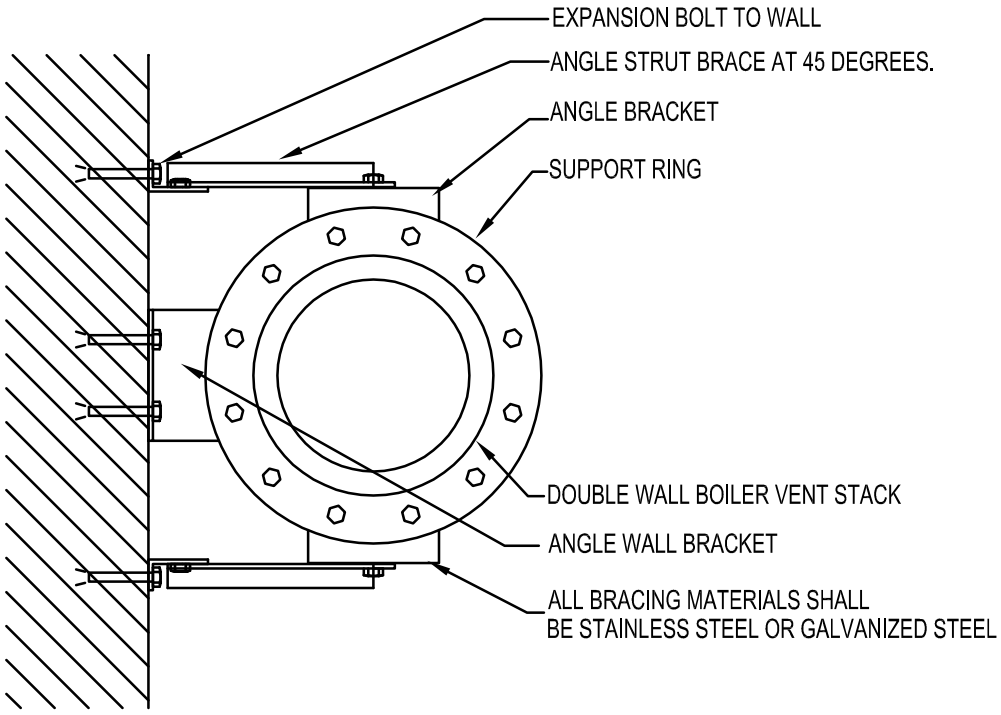

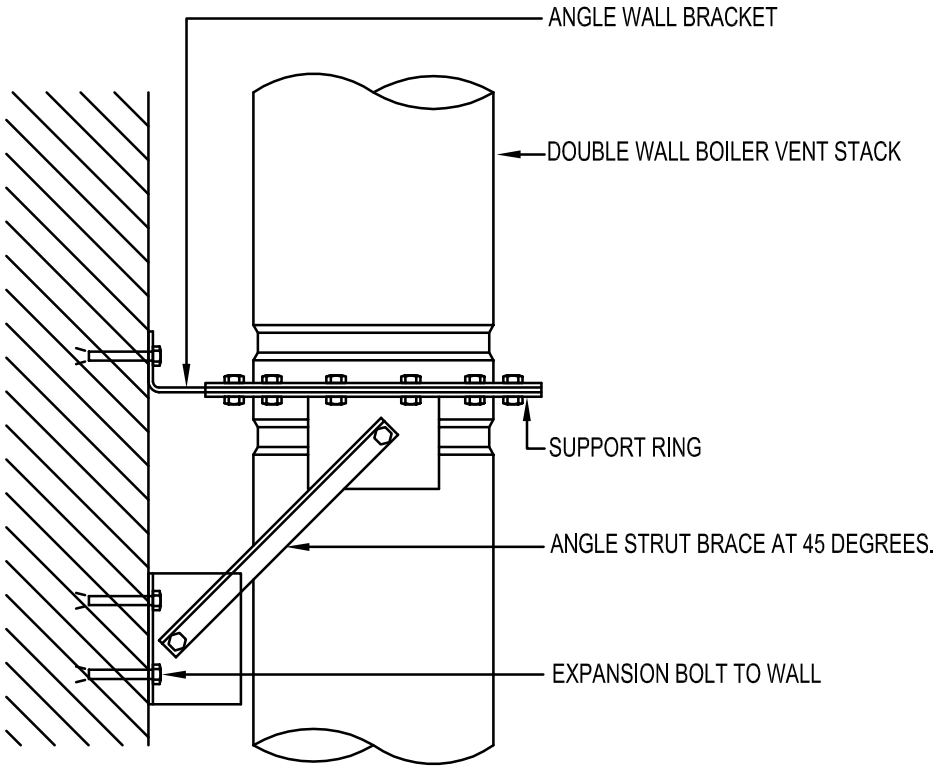

NOTE:
INSTALL AT JOINT DIRECTLY ABOVE TEE AT WALL PENETRATION AND EVERY 15'-0" O.C. VERTICAL. EXTEND BOILER VENT MINIMUM 3'-0" ABOVE ROOF / PARAPET.

M1.32

BOILER STACK SUPPORT DETAIL

SCALE: NONE

WAKE COUNTY PUBLIC SCHOOL SYSTEM
111 Corning Road,Suite 190
Cary, NC 27518
(919) 588-3608

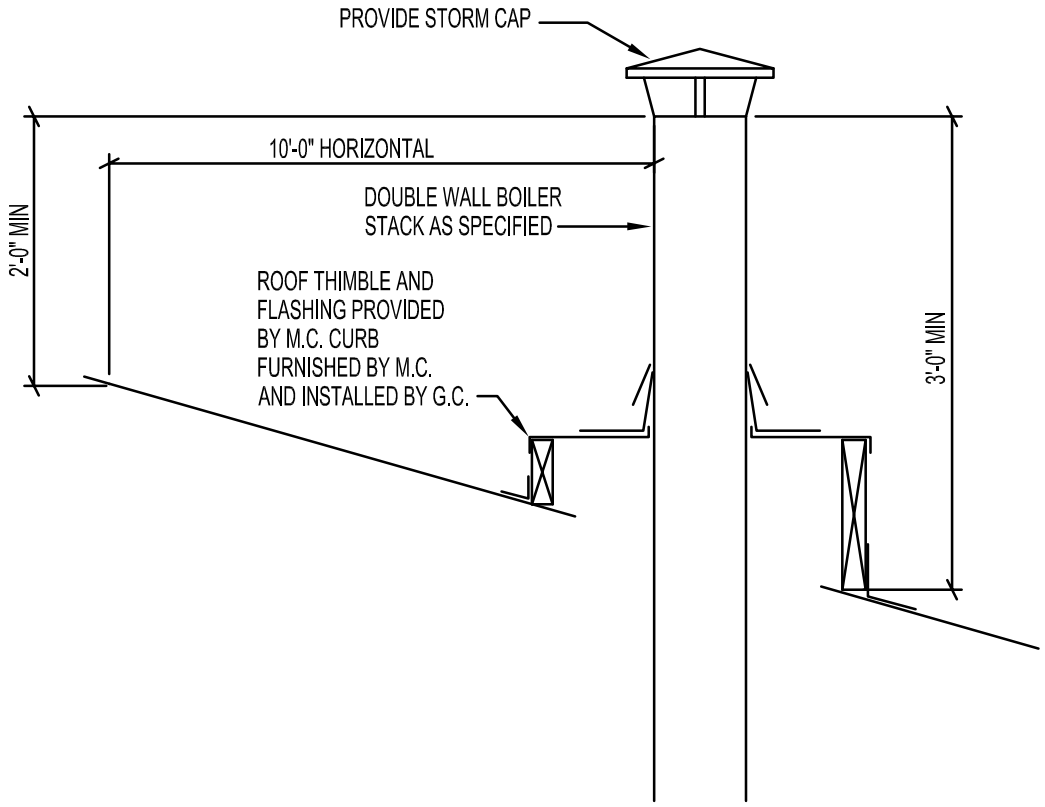

M1.33

BOILER STACK THRU SLOPED ROOF DETAIL

SCALE: NONE

WAKE COUNTY PUBLIC SCHOOL SYSTEM
111 Corning Road,Suite 190
Cary, NC 27518
(919) 588-3608

NOTES:

1. LOCATE TRAP SO AS TO BE ACCESSIBLE FOR CLEANING.

2. H = FAN INLET PRESSURE (IN. W.C.) + 1 IN.

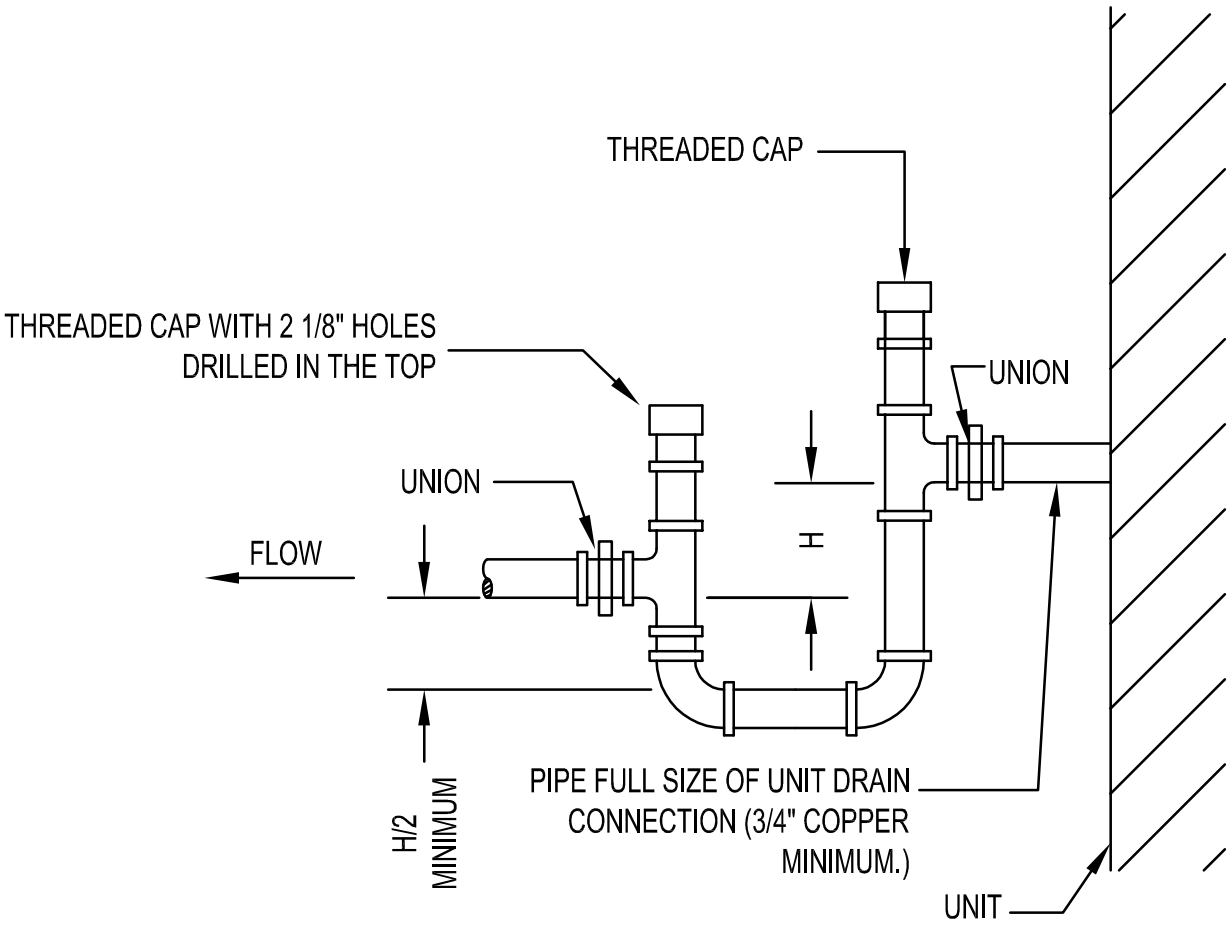

M1.34

DRAW THROUGH CONDENSATE DRAIN DETAIL

SCALE: NONE

WAKE COUNTY PUBLIC SCHOOL SYSTEM
111 Corning Road,Suite 190
Cary, NC 27518
(919) 588-3608

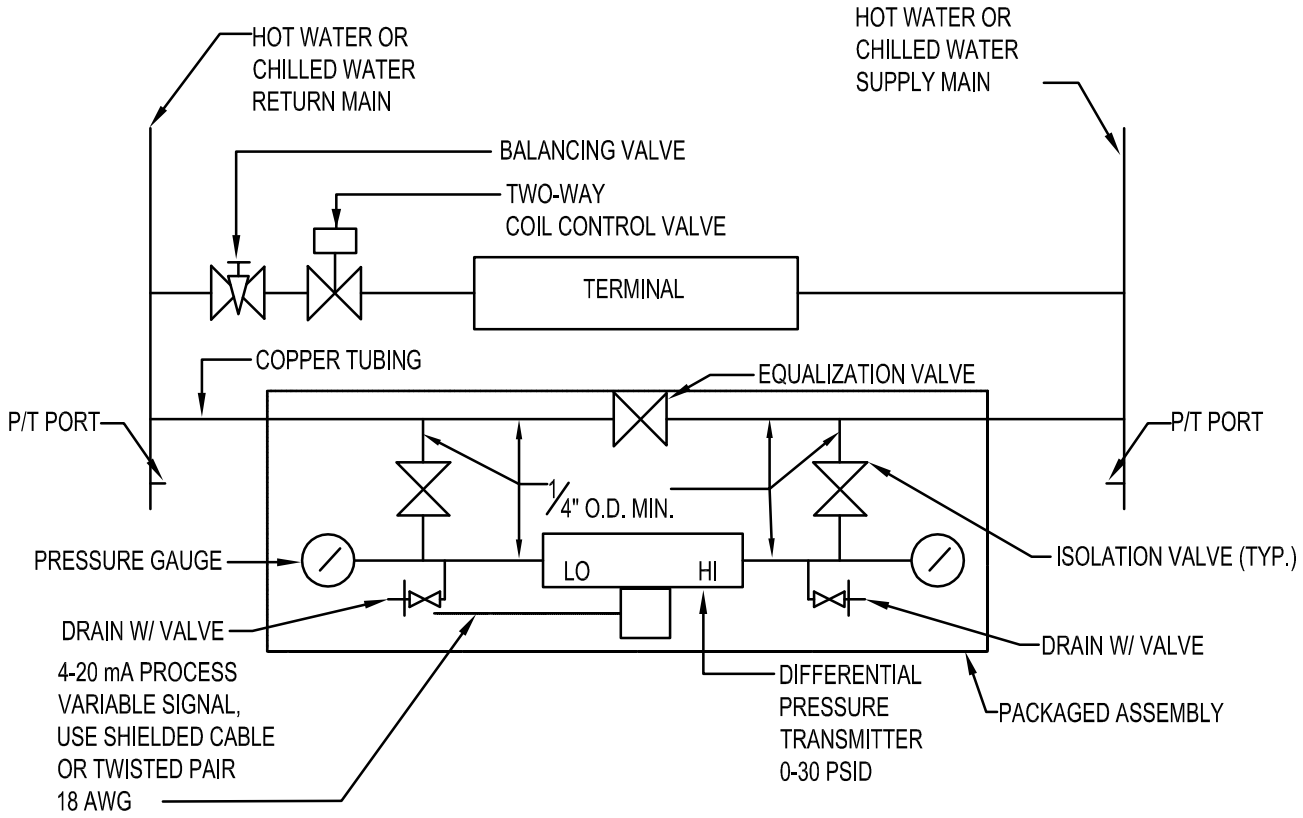

NOTES:

1. GROUND SHIELD AT CONTROL PANEL ONLY.
2. PURGE AIR FROM TUBING PRIOR TO START-UP USING VENT VALVES ON TRANSMITTER.
3. OPEN EQUALIZATION VALVE TO BALANCE PRESSURE, CLOSE PRIOR TO SYSTEM START-UP.
4. PIPING SHALL BE TYPE 'L' RIGID COPPER ONLY WITH SOLDERED FITTINGS. NO SOFT COPPER ALLOWED.

M1.41

DIFFERENTIAL PRESSURE TRANSMITTER DETAIL

SCALE: NONE

WAKE COUNTY PUBLIC SCHOOL SYSTEM
111 Corning Road,Suite 190
Cary, NC 27518
(919) 588-3608

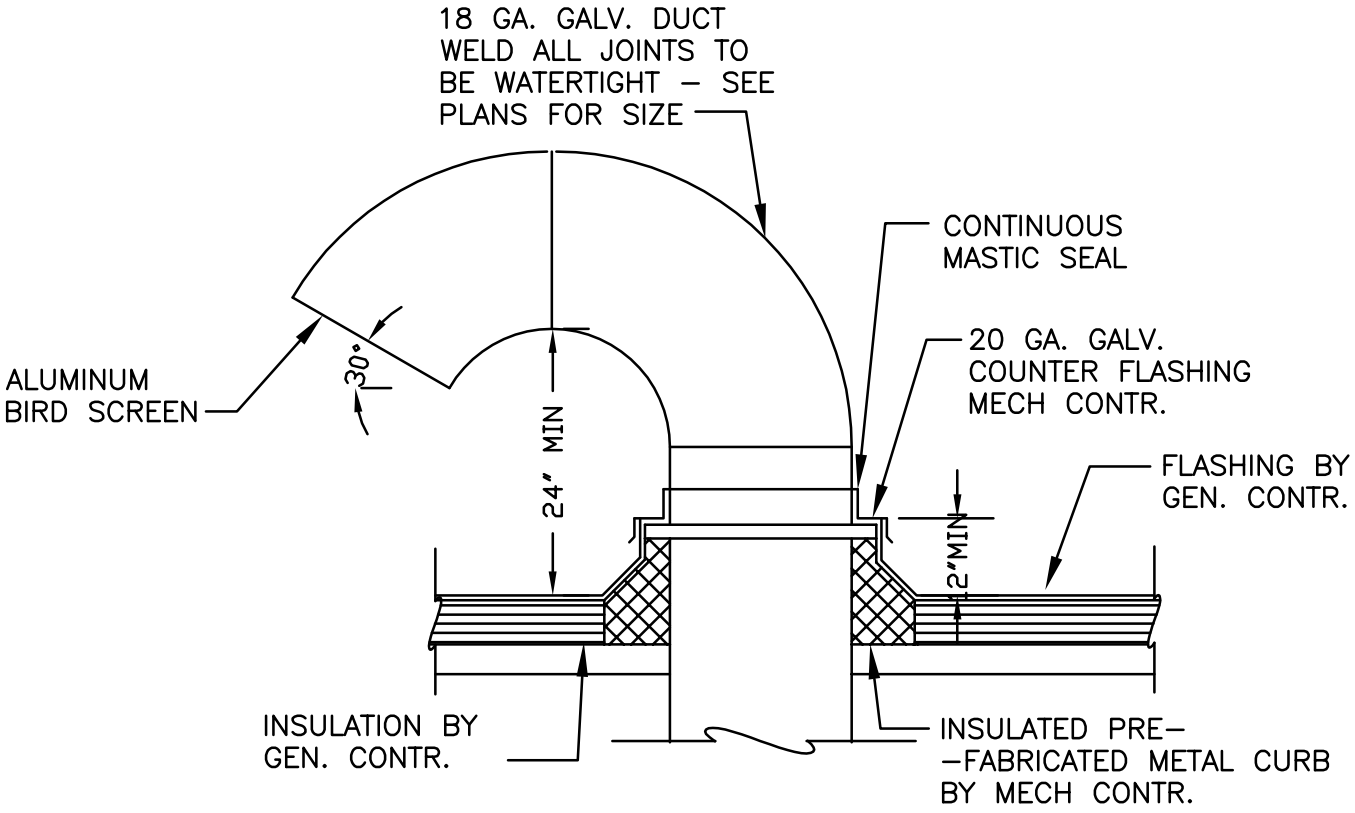

M1.42

GOOSENECK ROOF PENETRATION DETAIL

SCALE: NONE

WAKE COUNTY PUBLIC SCHOOL SYSTEM
111 Corning Road,Suite 190
Cary, NC 27518
(919) 588-3608

HEAT TRACE SPECIFICATION:

HEAT-TRACING CABLES: 8 W/FT OUTPUT. SELF-REGULATING, ELECTRIC HEATING CABLES SUITABLE FOR FREEZE PROTECTION OF METAL PIPING. CABLES: PAIR OF PARALLEL NO. 16 AWG TINNED-COPPER BUS WIRES EMBEDDED IN CROSS-LINKED CONDUCTIVE POLYMER CORE, WHICH VARIES POWER OUTPUT IN RESPONSE TO TEMPERATURE ALONG ITS LENGTH. CABLE SHALL BE CAPABLE OF CROSSING OVER ITSELF WITHOUT OVERHEATING. HEAT OUTPUT: AT LEAST 90 PERCENT OF RATING OVER A TEMPERATURE RANGE FROM 40 TO 150 DEG F PIPE TEMPERATURE. CABLE COVER: FABRICATED OF CROSS-LINKED, MODIFIED, POLYOLEFIN DIELECTRIC JACKET; WITH ULTRAVIOLET INHIBITOR. PIPE THERMOSTAT: UNIT WITH ADJUSTABLE TEMPERATURE RANGE FROM 35 TO 50 DEG F SNAP ACTION; OPEN-ON-RISE, SINGLE-POLE SWITCH WITH 25-A RATING; AND REMOTE BULB FOR DIRECTLY SENSING PIPE-WALL TEMPERATURE.

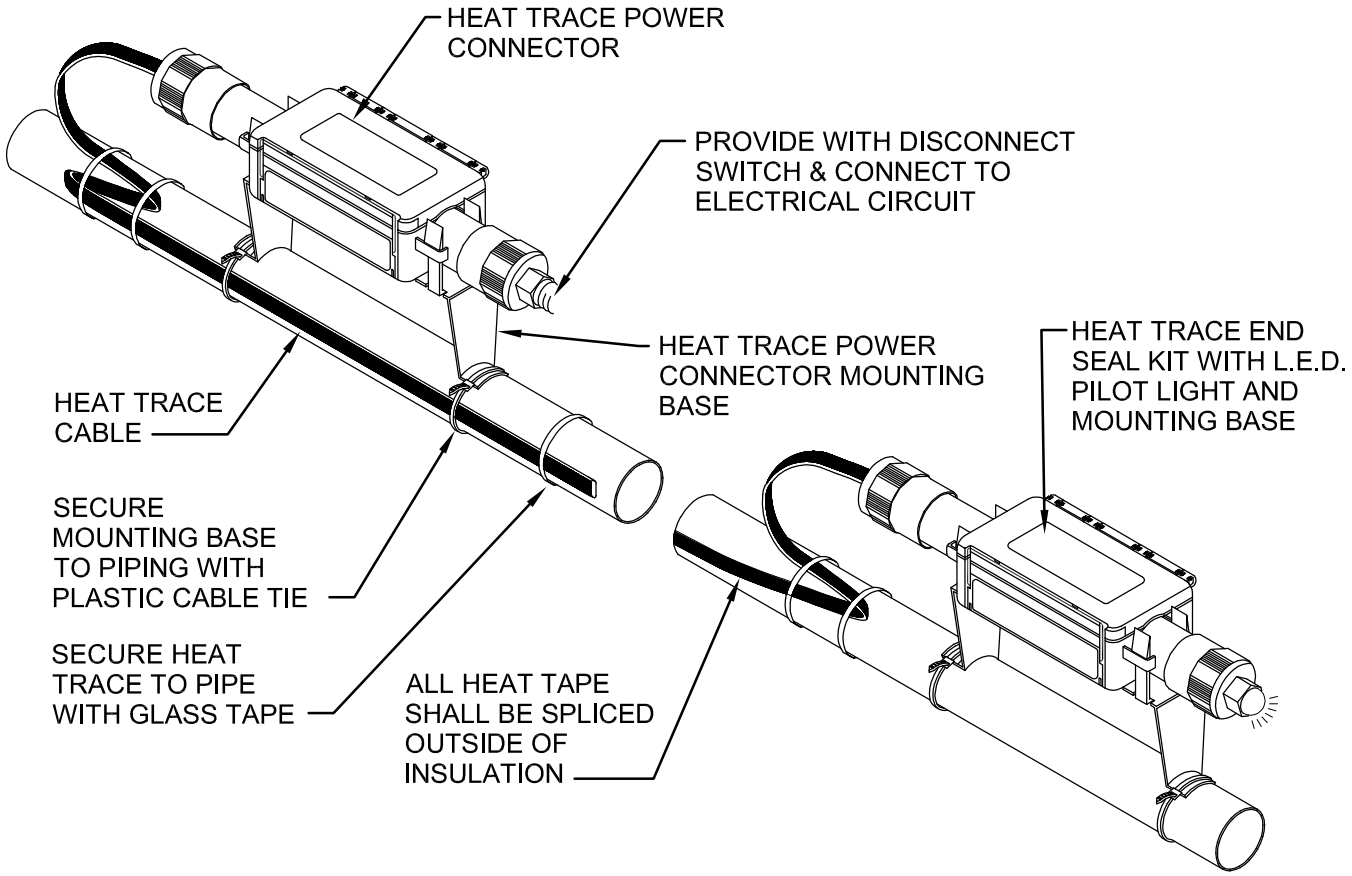

M1.43 HEAT TRACE CABLE INSTALLATION DETAIL

SCALE: NONE

WAKE COUNTY PUBLIC SCHOOL SYSTEM
111 Corning Road,Suite 190
Cary, NC 27518
(919) 588-3608

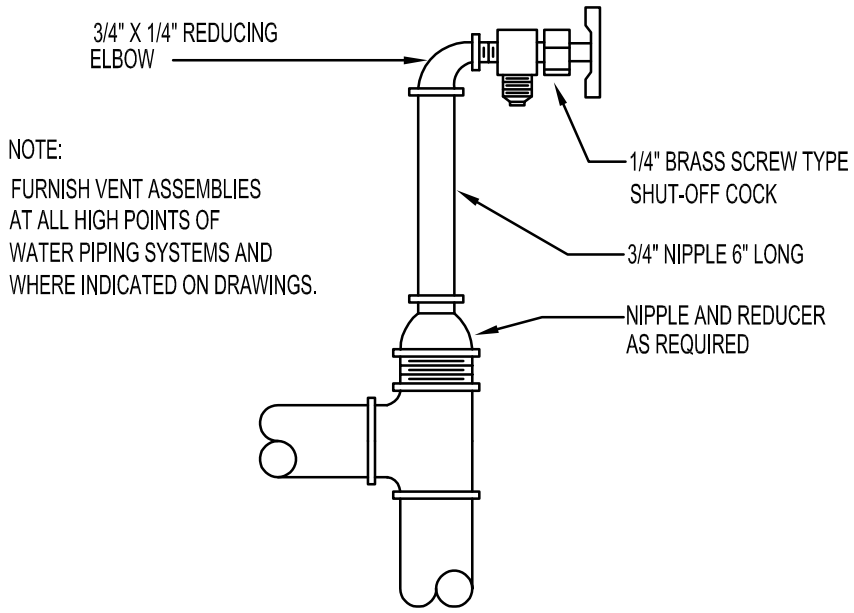

NOTE:
FURNISH VENT ASSEMBLIES AT ALL HIGH POINTS OF WATER PIPING SYSTEMS AND WHERE INDICATED ON DRAWINGS.

M1.44

MANUAL AIR VENT DETAIL

SCALE: NONE

WAKE COUNTY PUBLIC SCHOOL SYSTEM
111 Corning Road,Suite 190
Cary, NC 27518
(919) 588-3608

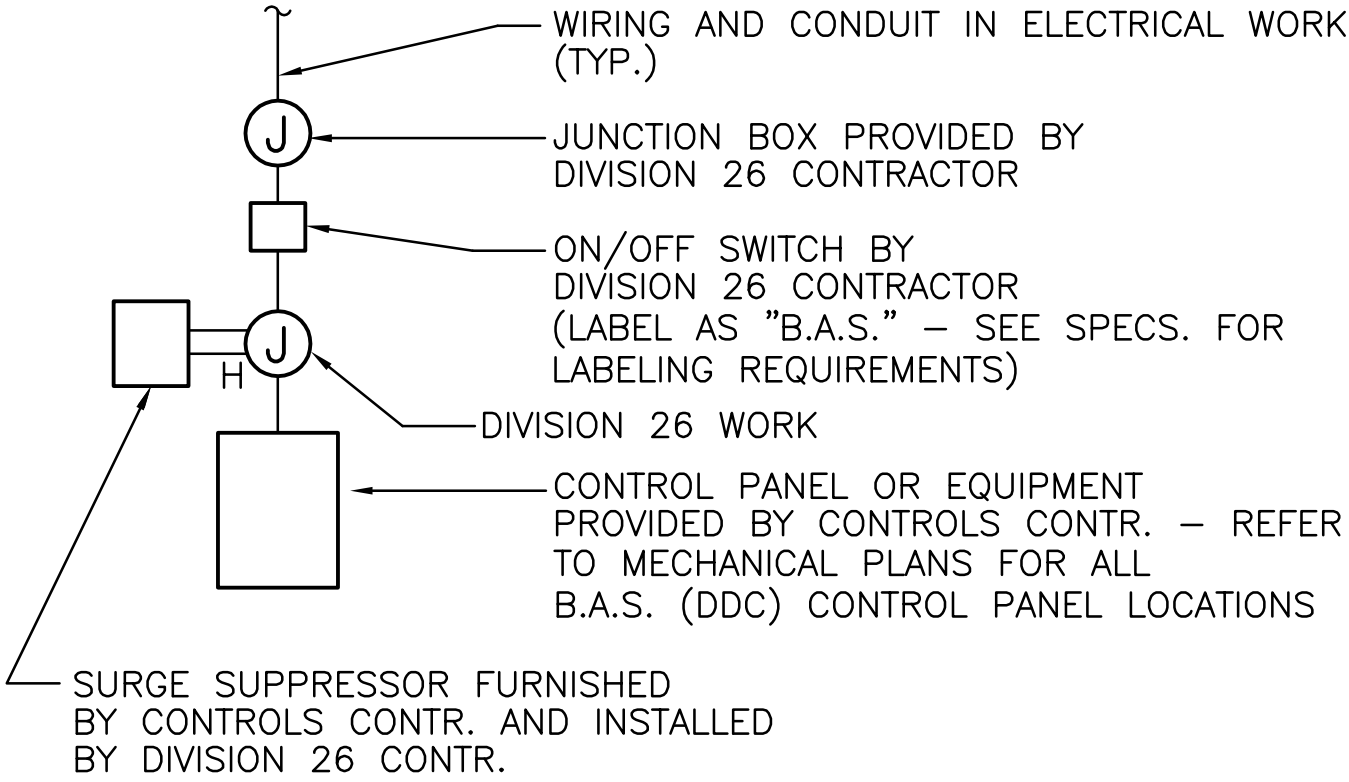

M1.45

POWER SUPPLY FOR CONTROLS DETAIL

SCALE: NONE

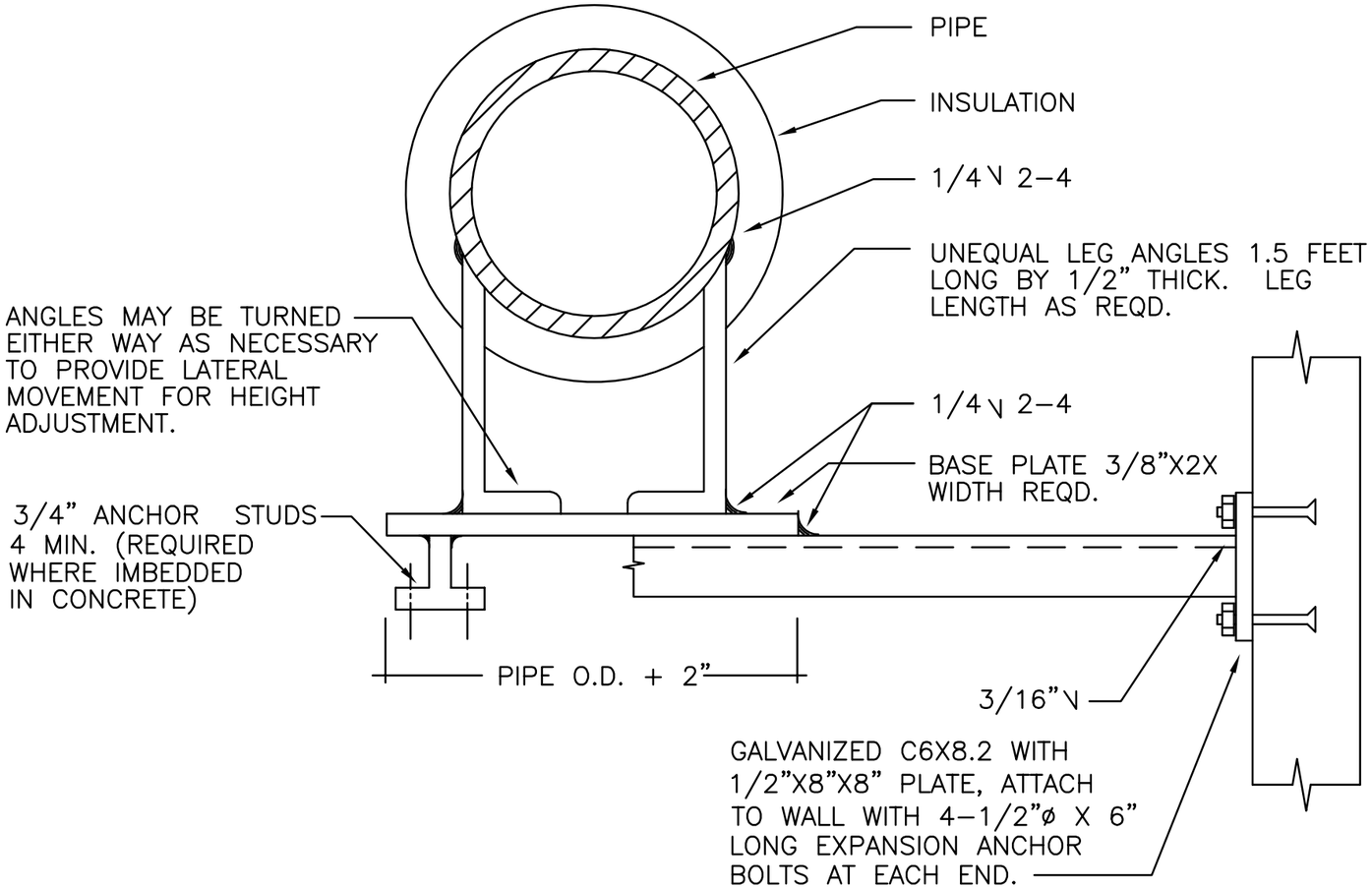

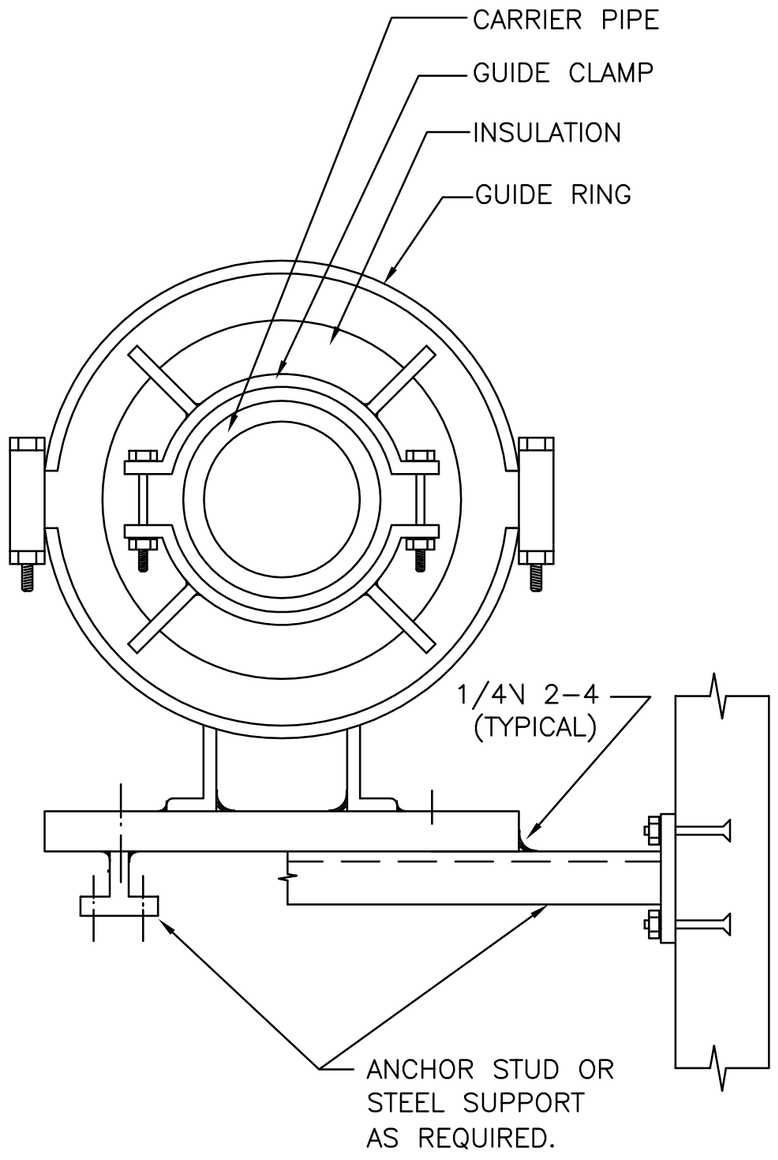

M1.51

PIPE EXPANSION ANCHOR AND GUIDE DETAIL

SCALE: NONE

WAKE COUNTY PUBLIC SCHOOL SYSTEM
111 Corning Road,Suite 190
Cary, NC 27518
(919) 588-3608

WAKE COUNTY PUBLIC SCHOOL SYSTEM
111 Corning Road,Suite 190
Cary, NC 27518
(919) 588-3608

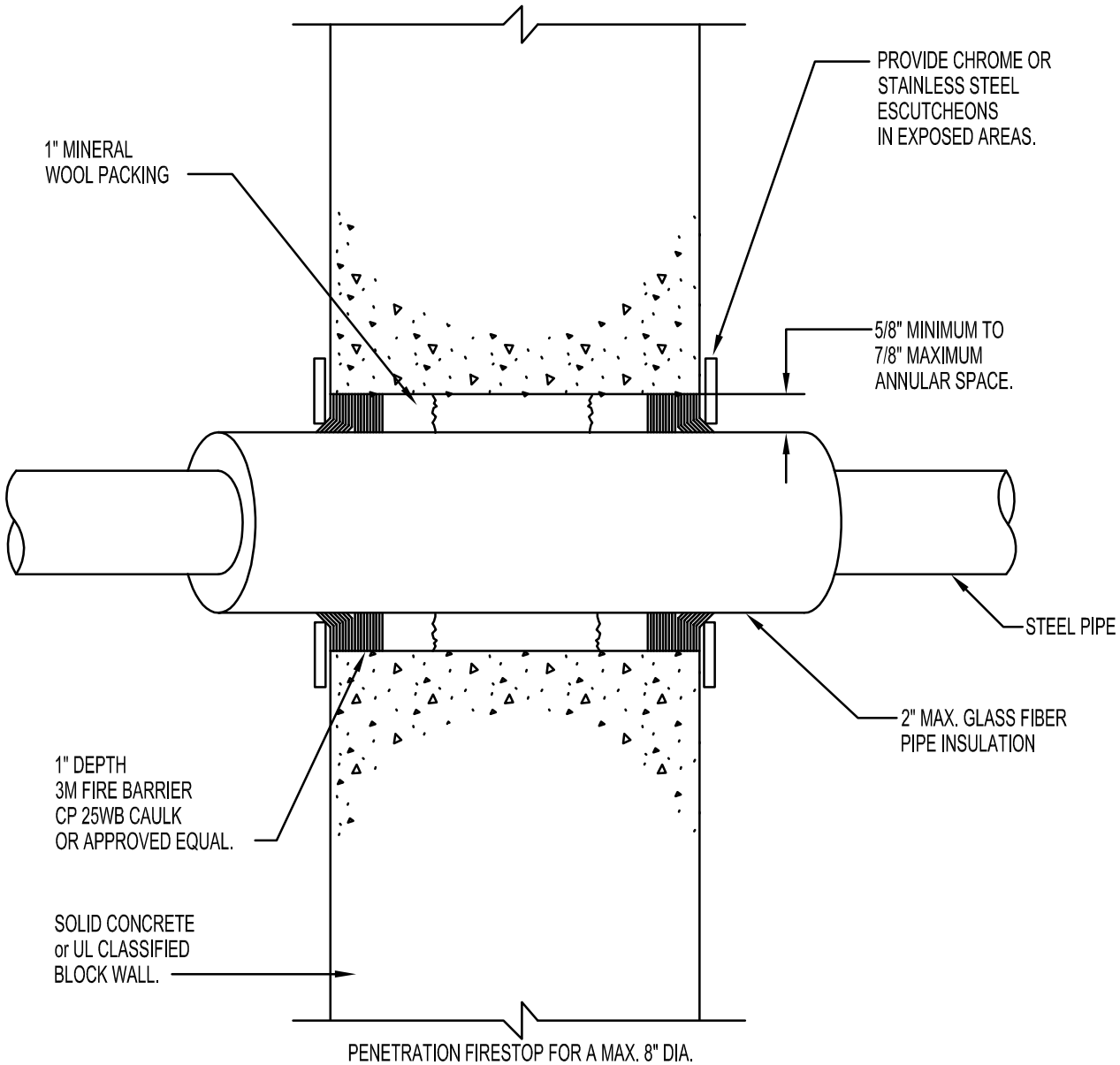

PENETRATION FIRESTOP FOR A MAX. 8" DIA. INSULATED STEEL PIPE THROUGH A CONCRETE WALL. (TYPICAL FOR 2 HR RATED WALLS)

NOTE:
FOR NON-FIRE RATED WALL PENETRATIONS INSTALL AS DETAILED ABOVE AND SUBSTITUTE ACRYLIC SILICONE CAULK FOR FIRE BARRIER CAULK.

M1.52

PIPING PENETRATION THRU CONCRETE WALL DETAIL

SCALE: NONE

WAKE COUNTY PUBLIC SCHOOL SYSTEM
111 Corning Road,Suite 190
Cary, NC 27518
(919) 588-3608

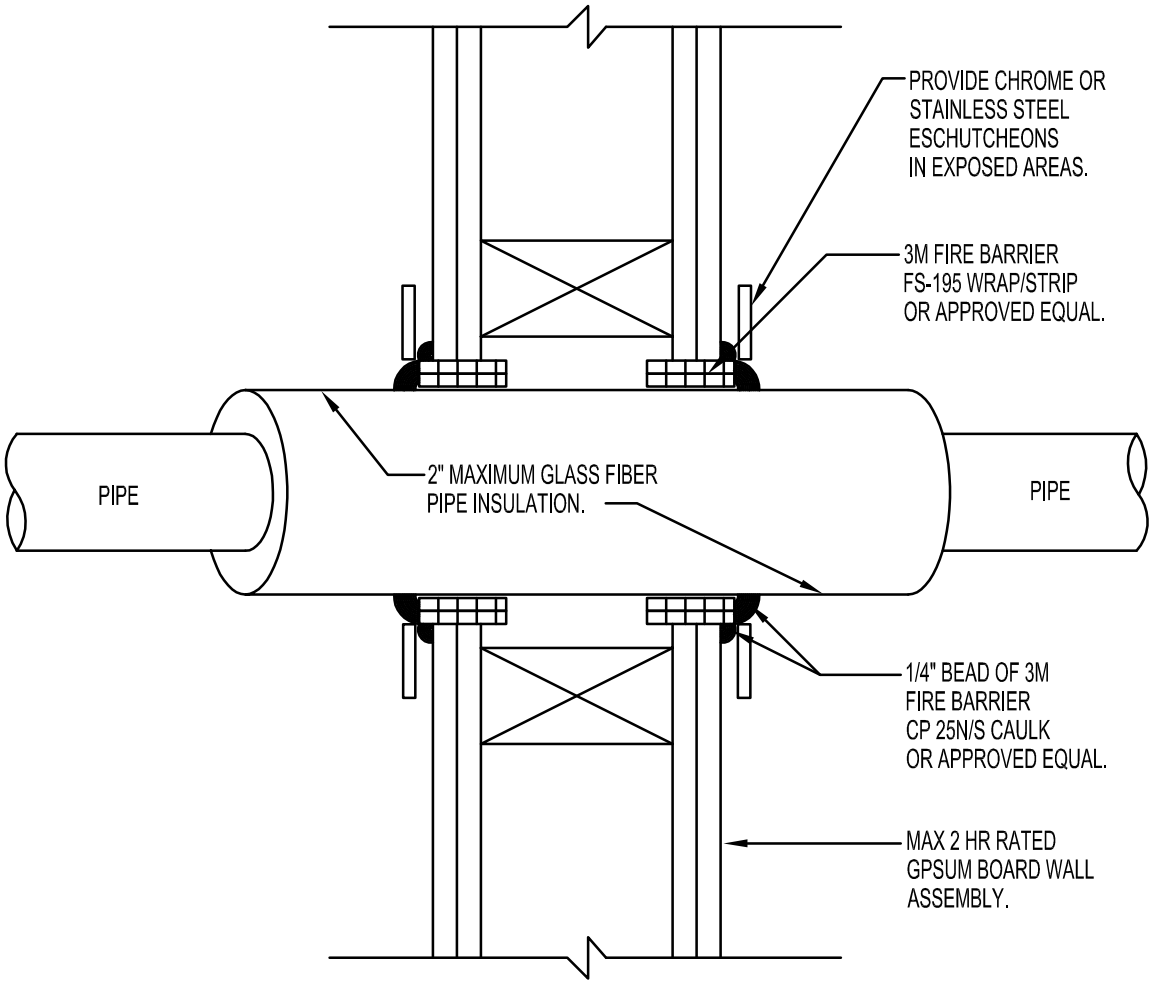

PENETRATION FIRESTOP FOR A MAX. 12" DIA. INSULATED STEEL PIPE THROUGH A GYPSUM BOARD WALL. (UL SYSTEM WL1002 TYPICAL FOR 1 & 2HR. RATED WALLS)

NOTE:
FOR NON-FIRE RATED WALL PENETRATIONS INSTALL AS DETAILED ABOVE AND SUBSTITUTE ACRYLIC SILICONE CAULK FOR FIRE BARRIER CAULK.

M1.53

PIPING PENETRATION THRU STUD WALL DETAIL

SCALE: NONE

WAKE COUNTY PUBLIC SCHOOL SYSTEM
111 Corning Road,Suite 190
Cary, NC 27518
(919) 588-3608

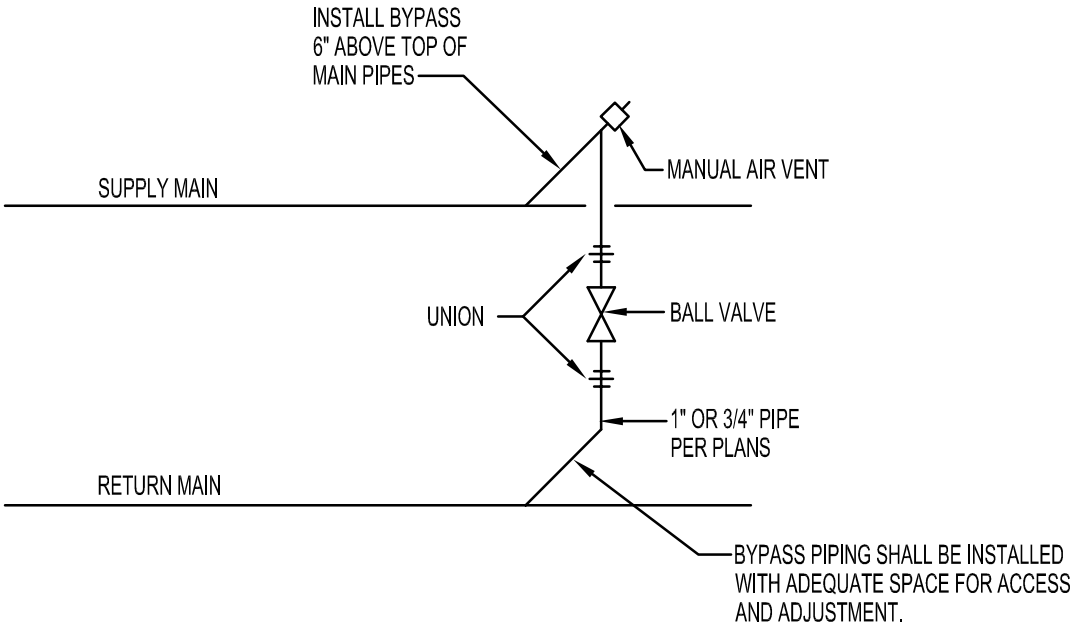

M1.54

PIPING BYPASS DETAIL

SCALE: NONE

WAKE COUNTY PUBLIC SCHOOL SYSTEM
111 Corning Road,Suite 190
Cary, NC 27518
(919) 588-3608

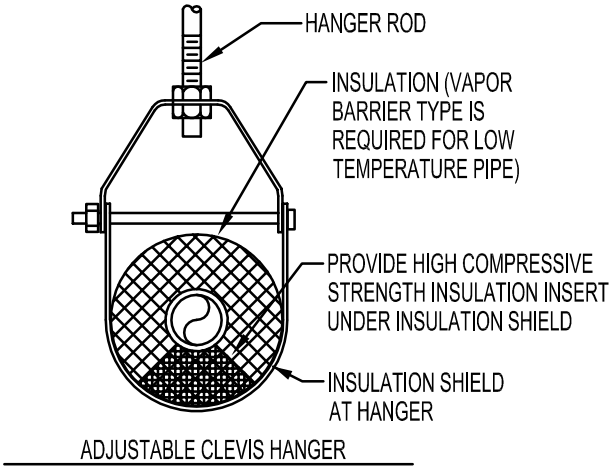

ADJUSTABLE CLEVIS HANGER

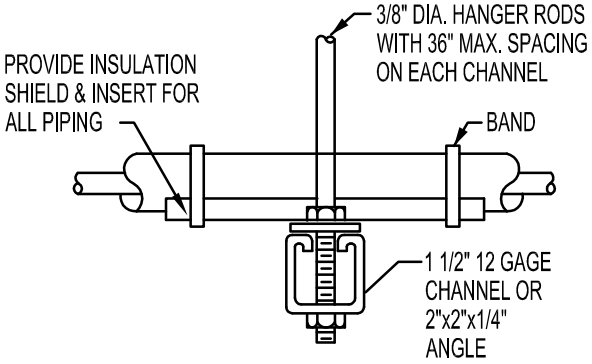

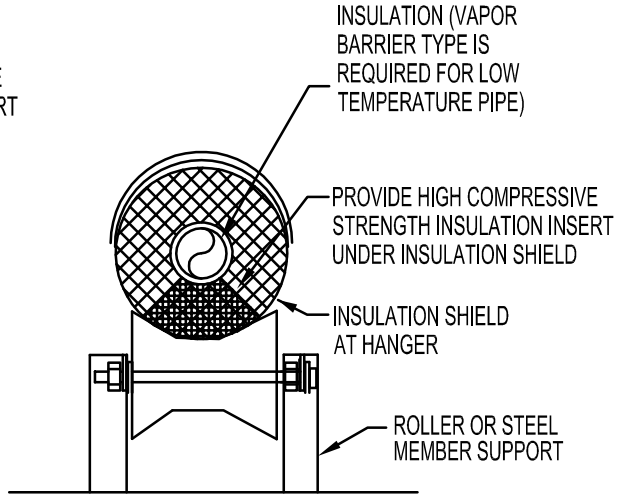

ROLLER OR BOTTOM PIPE SUPPORT

M1.55

PIPING SUPPORT DETAIL

SCALE: NONE

WAKE COUNTY PUBLIC SCHOOL SYSTEM
111 Corning Road,Suite 190
Cary, NC 27518
(919) 588-3608

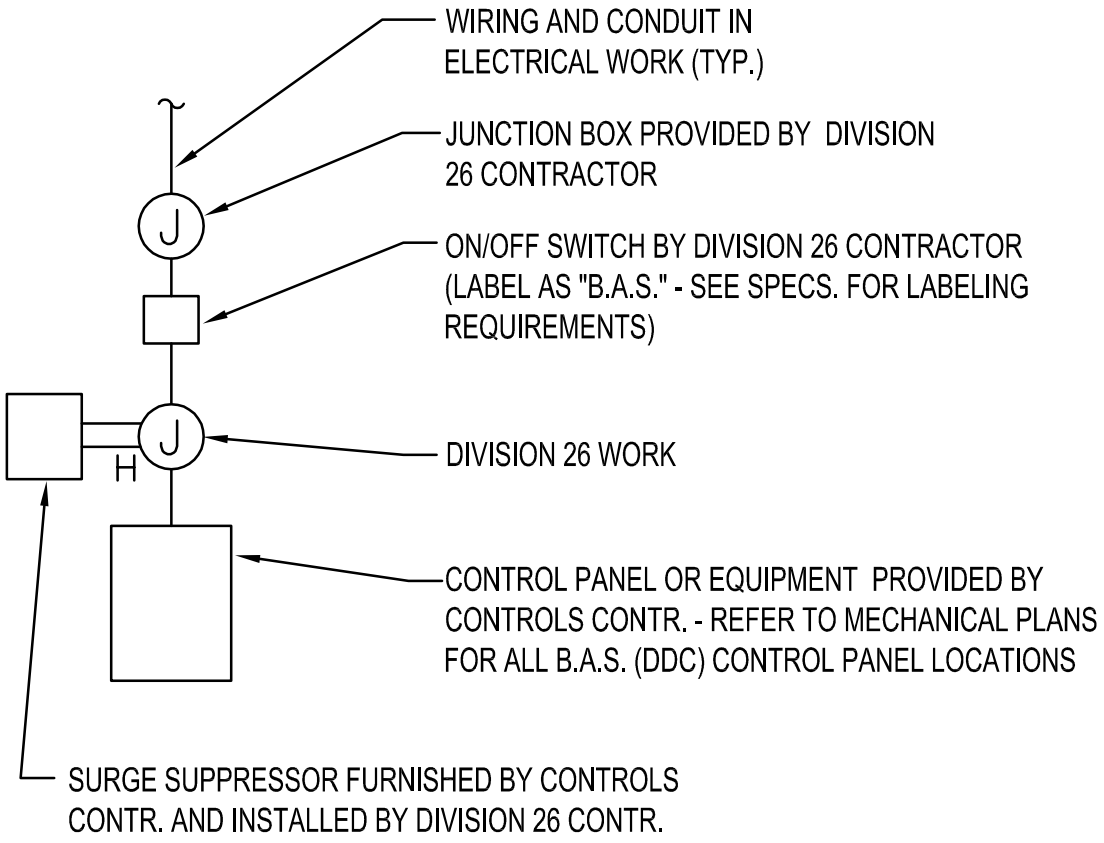

M1.56

TYPICAL ELECTRICAL CONNECTION DETAIL

SCALE: NONE

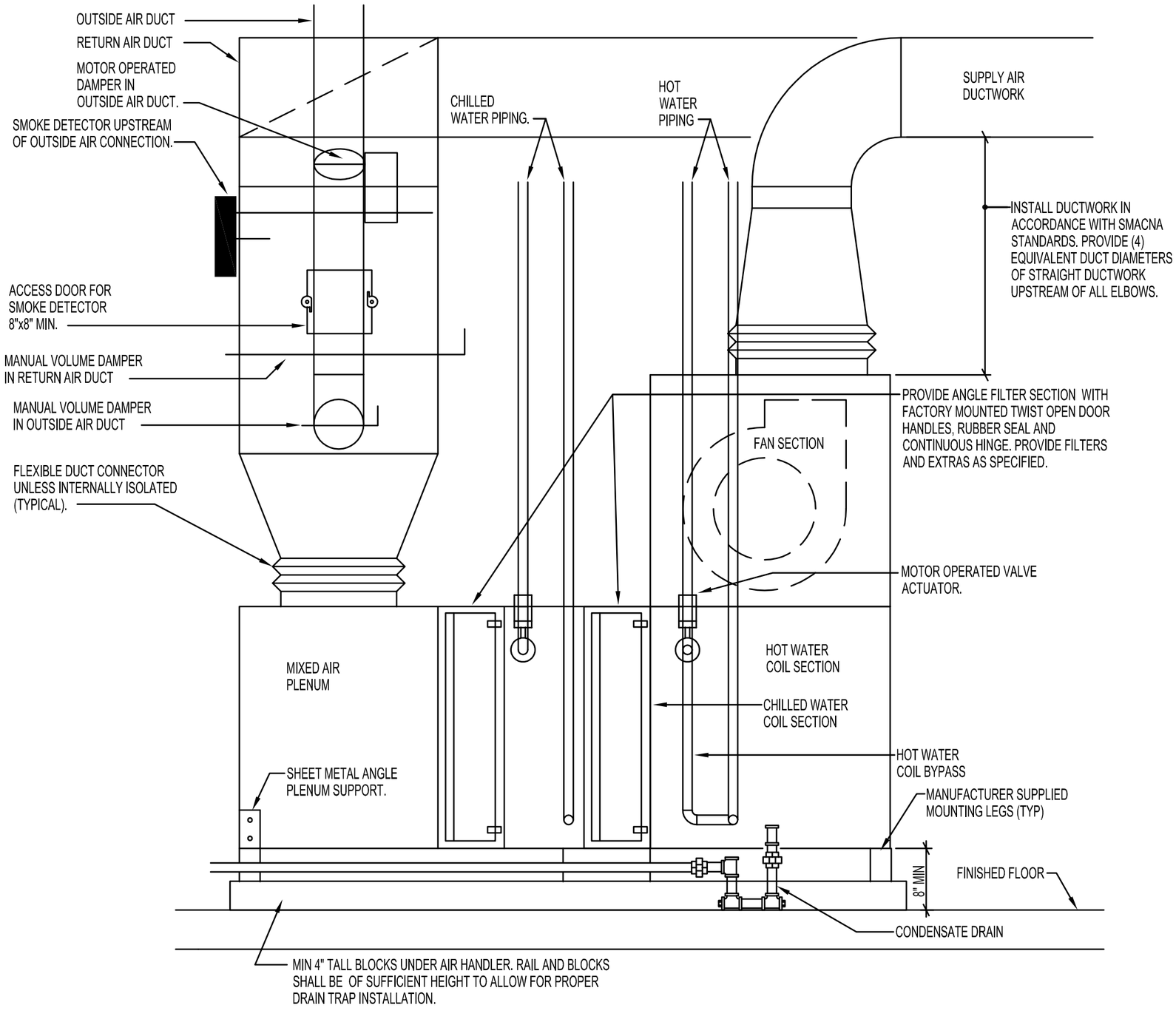

M2.01

CONSTANT VOLUME AIR HANDLING UNIT DETAIL

SCALE: NONE

WAKE COUNTY PUBLIC SCHOOL SYSTEM
111 Corning Road,Suite 190
Cary, NC 27518
(919) 588-3608

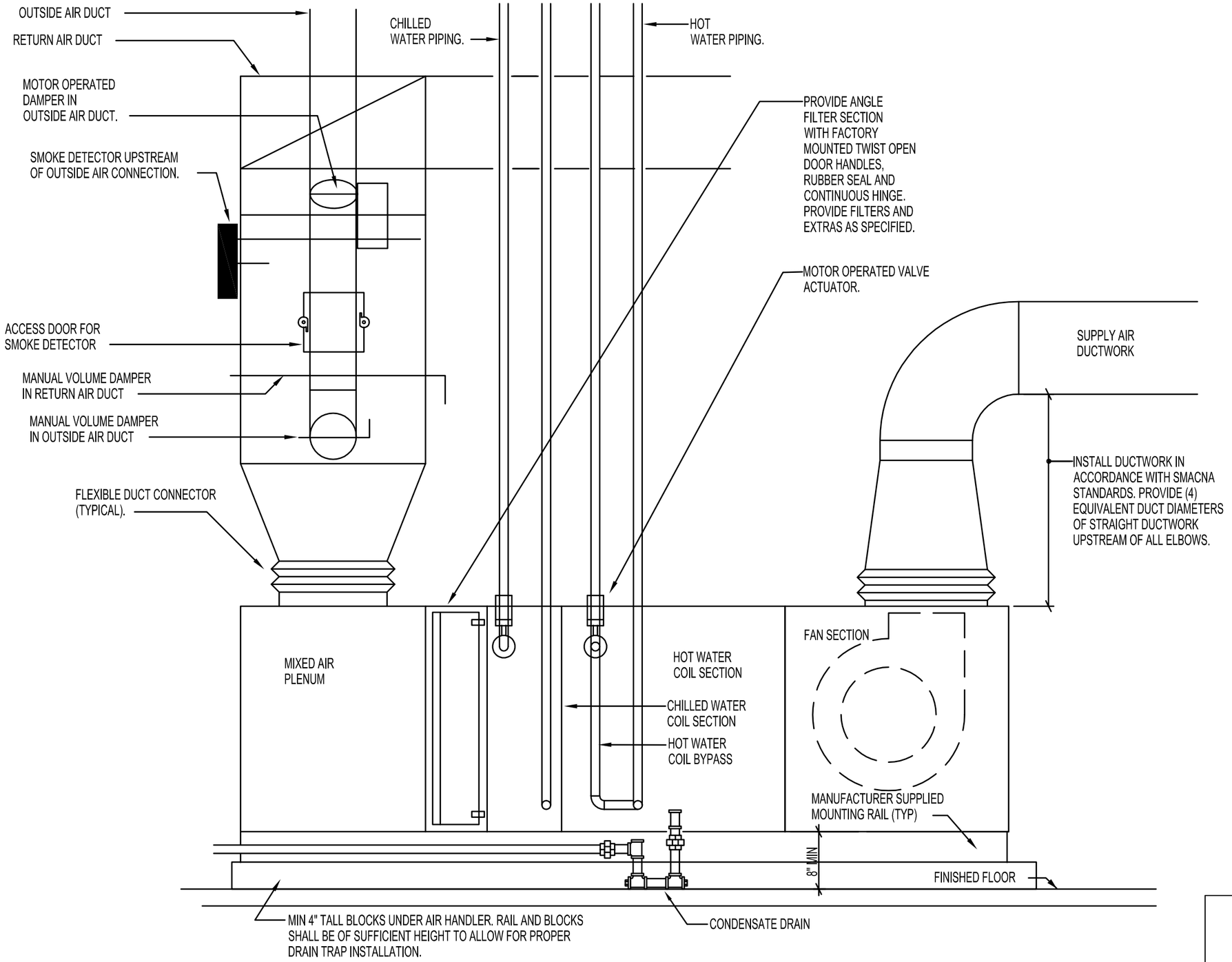

M2.02 CONSTANT VOLUME HORIZONTAL AIR HANDLING UNIT DETAIL

WAKE COUNTY PUBLIC SCHOOL SYSTEM
111 Corning Road,Suite 190
Cary, NC 27518
(919) 588-3608

WAKE COUNTY PUBLIC SCHOOL SYSTEM
111 Corning Road,Suite 190
Cary, NC 27518
(919) 588-3608

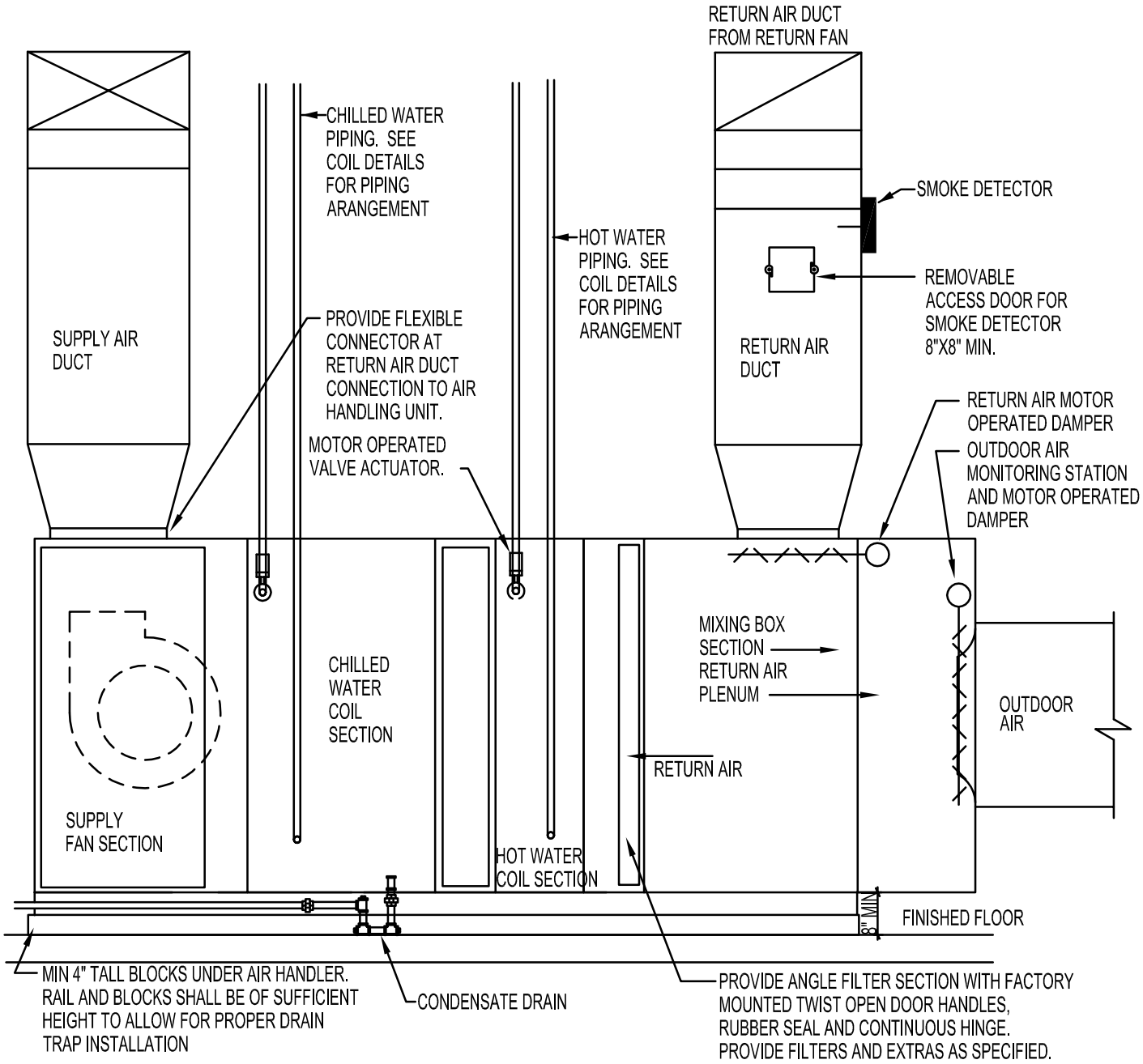

M2.03

CONSTANT VOLUME HORIZONTAL AHU WITH ECONOMIZER

SCALE: NONE

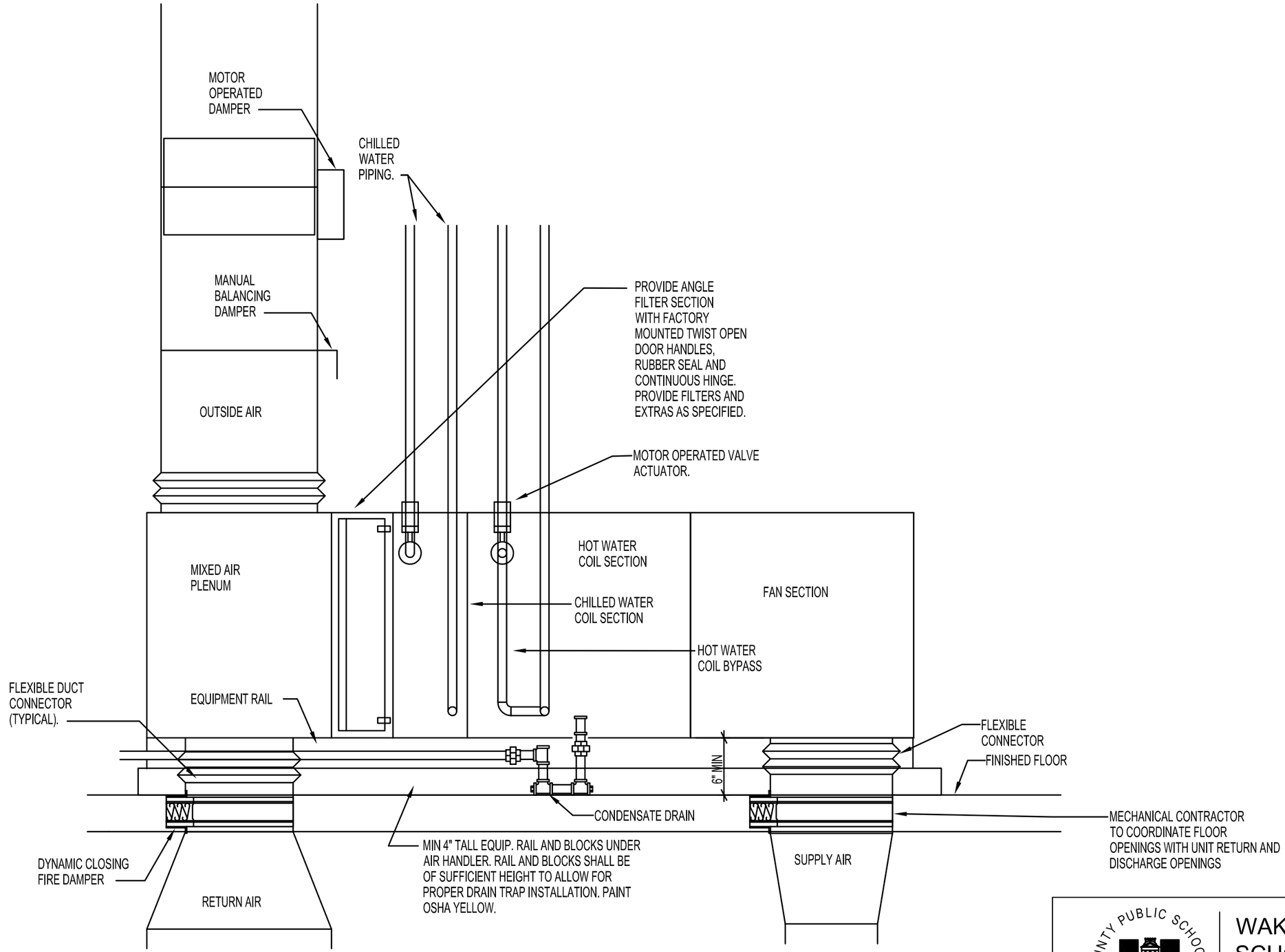

M2.04

CONSTANT VOLUME HORIZONTAL AIR HANDLING UNIT DETAIL

SCALE: NONE

WAKE COUNTY PUBLIC SCHOOL SYSTEM
111 Corning Road,Suite 190
Cary, NC 27518
(919) 588-3608

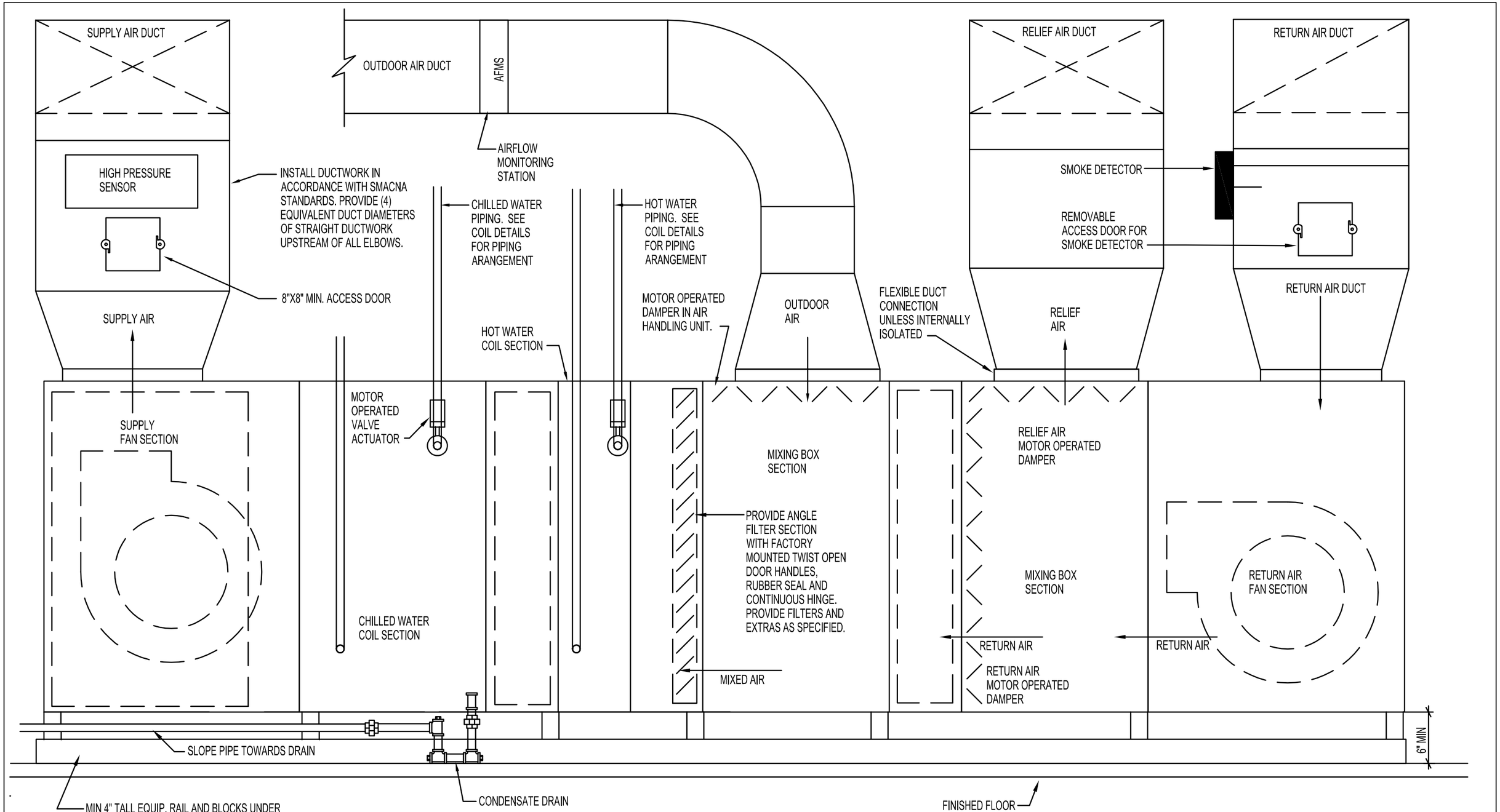

M2.05 VARIABLE VOLUME AIR HANDLING UNIT DETAIL

SCALE: NONE

WAKE COUNTY PUBLIC SCHOOL SYSTEM
111 Corning Road,Suite 190
Cary, NC 27518
(919) 588-3608

WAKE COUNTY PUBLIC SCHOOL SYSTEM
111 Corning Road,Suite 190
Cary, NC 27518
(919) 588-3608

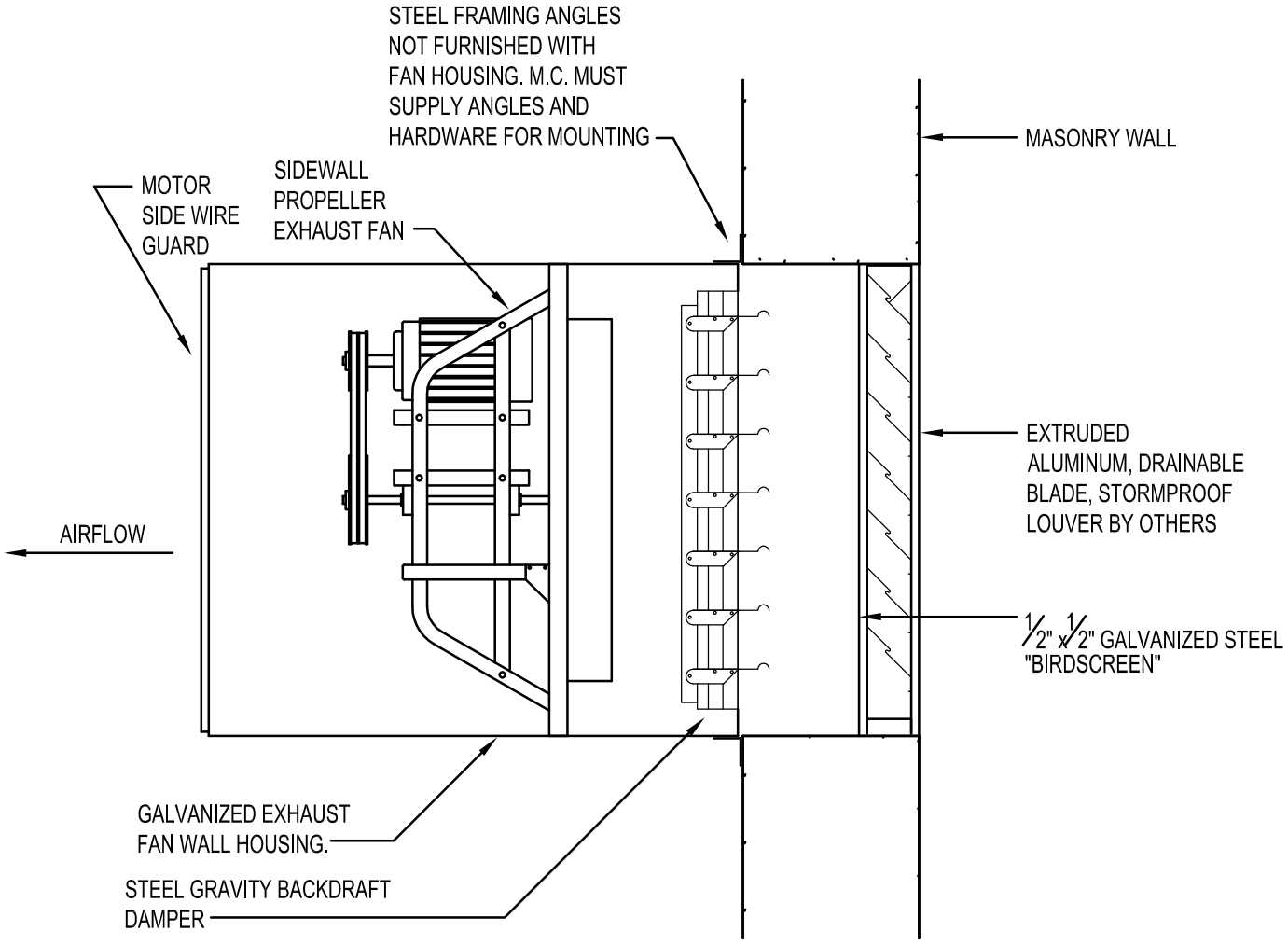

M2.07 PROPELLER FAN DETAIL

SCALE: NONE

WAKE COUNTY PUBLIC SCHOOL SYSTEM
111 Corning Road,Suite 190
Cary, NC 27518
(919) 588-3608

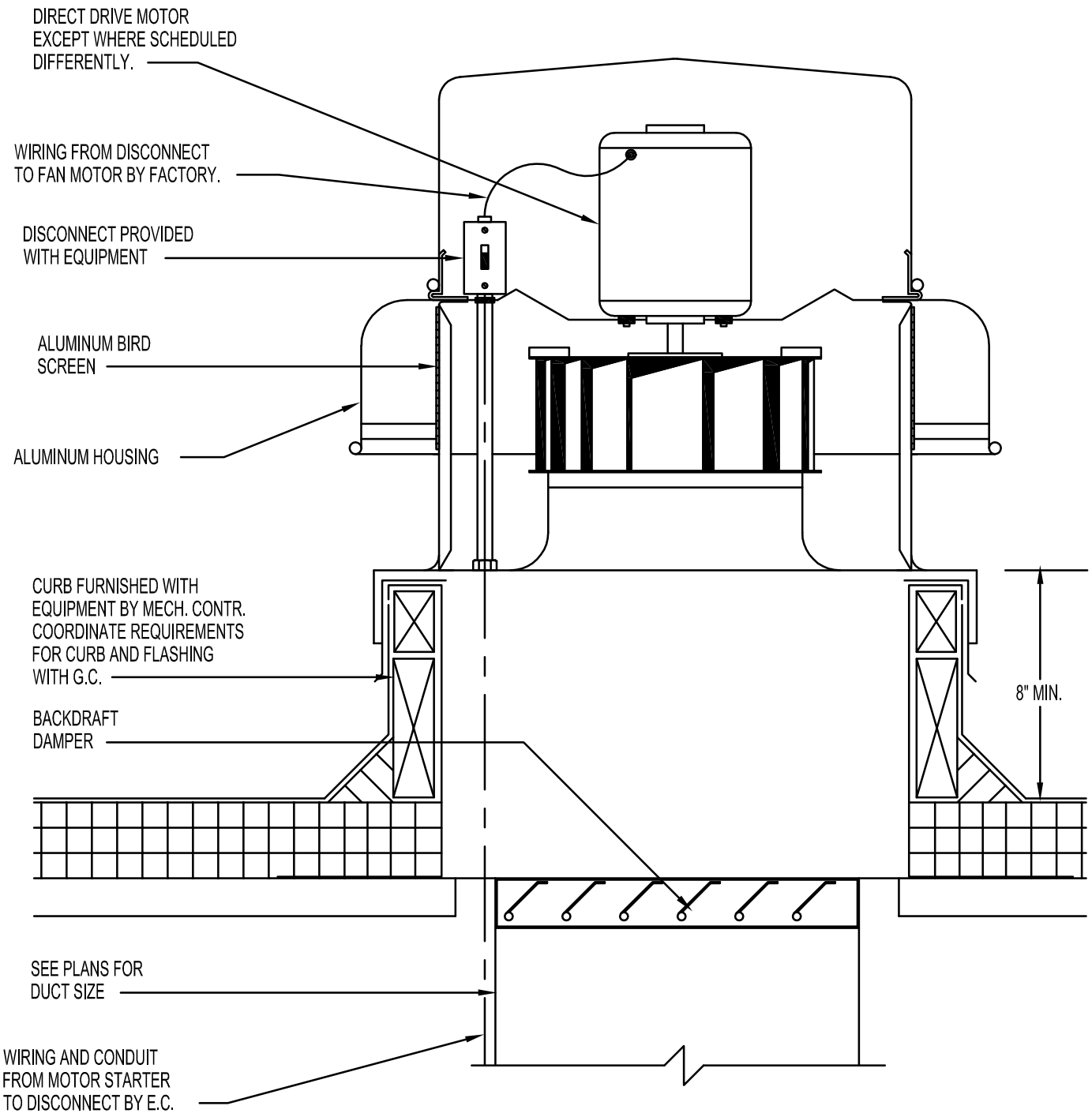

M2.08

ROOF MOUNTED FAN INSTALLATION DETAIL

SCALE: NONE

WAKE COUNTY PUBLIC SCHOOL SYSTEM
111 Corning Road,Suite 190
Cary, NC 27518
(919) 588-3608

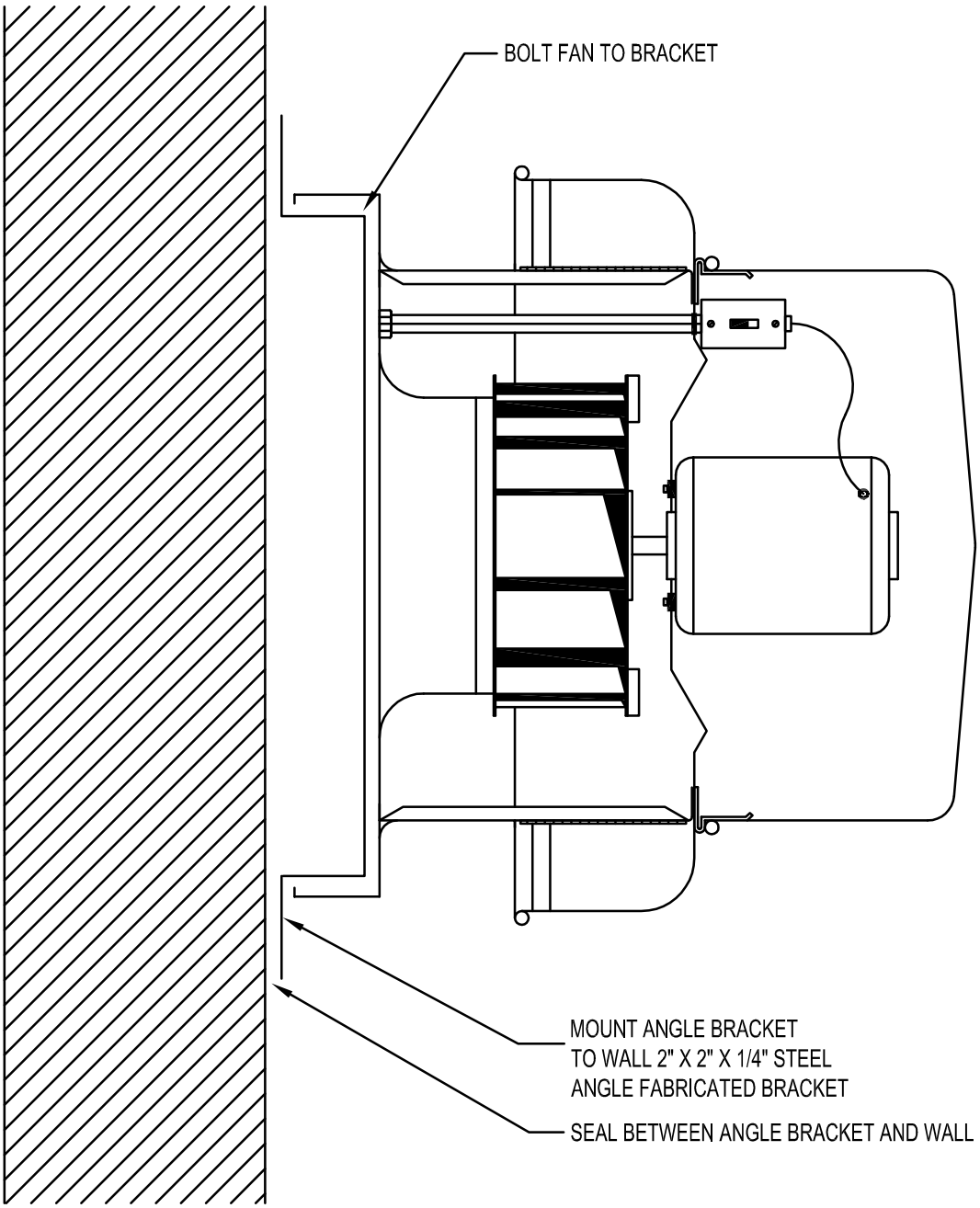

M2.09

WALL MOUNTED FAN INSTALLATION DETAIL

SCALE: NONE

WAKE COUNTY PUBLIC SCHOOL SYSTEM
111 Corning Road,Suite 190
Cary, NC 27518
(919) 588-3608

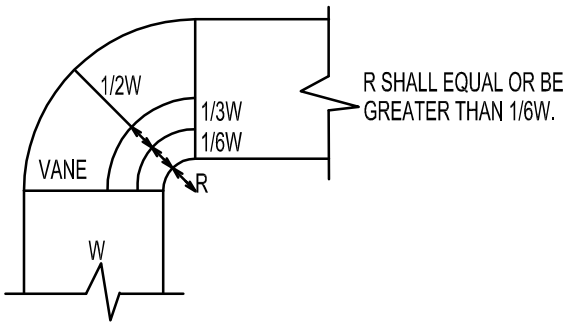

SHORT RADIUS ELBOW WITH TWO VANES

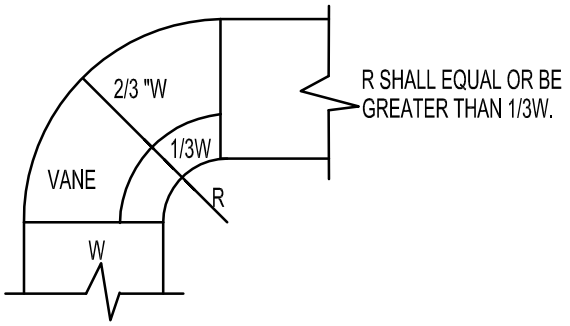

SHORT RADIUS ELBOW WITH ONE VANE

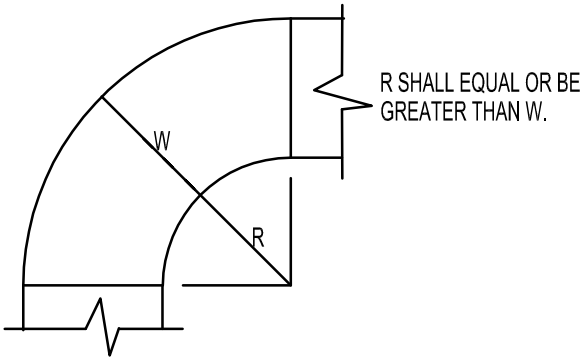

STANDARD RADIUS ELBOW

NOTES:

1. THE INTERIOR SURFACE OF ALL RADIUS ELBOWS SHALL BE MADE ROUND

2. ALL STANDARD RADIUS ELBOWS SHOWN ON PLANS MAY BE MADE SHORT RADIUS ELBOW. ALL SHORT RADIUS ELBOWS SHALL HAVE VANES. VANES SHALL BE CONSTRUCTED, SUPPORTED AND FASTENED AS RECOMMENDED BY SMACNA.

M2.11

EXPOSED DUCT PENETRATION DETAIL

SCALE: NONE

WAKE COUNTY PUBLIC SCHOOL SYSTEM
111 Corning Road,Suite 190
Cary, NC 27518
(919) 588-3608

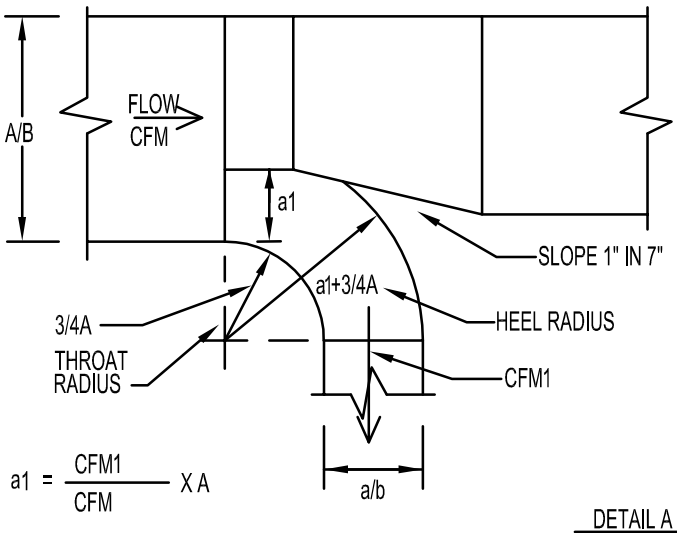

$a1 = \frac{CFM1}{CFM} \times A$

DETAIL A

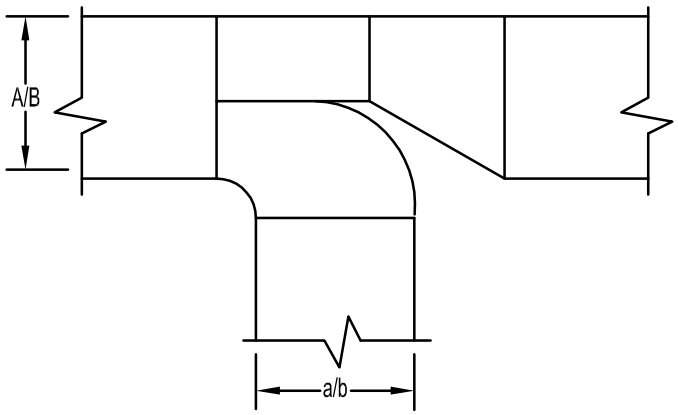

NORMAL WHEN B = b

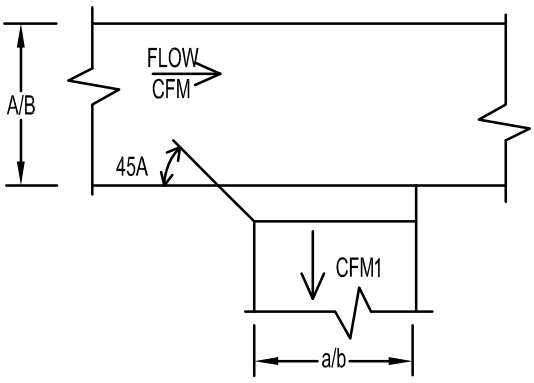

DETAIL B

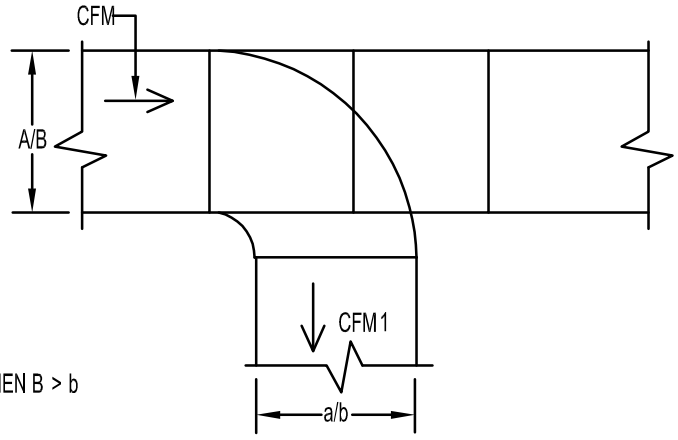

WHEN B > b

DETAIL C

WHEN $\frac{CFM1}{CFM} \leq 0.1$

M2.12

DUCT TAKEOFF DETAIL

SCALE: NONE

WAKE COUNTY PUBLIC SCHOOL SYSTEM
111 Corning Road,Suite 190
Cary, NC 27518
(919) 588-3608

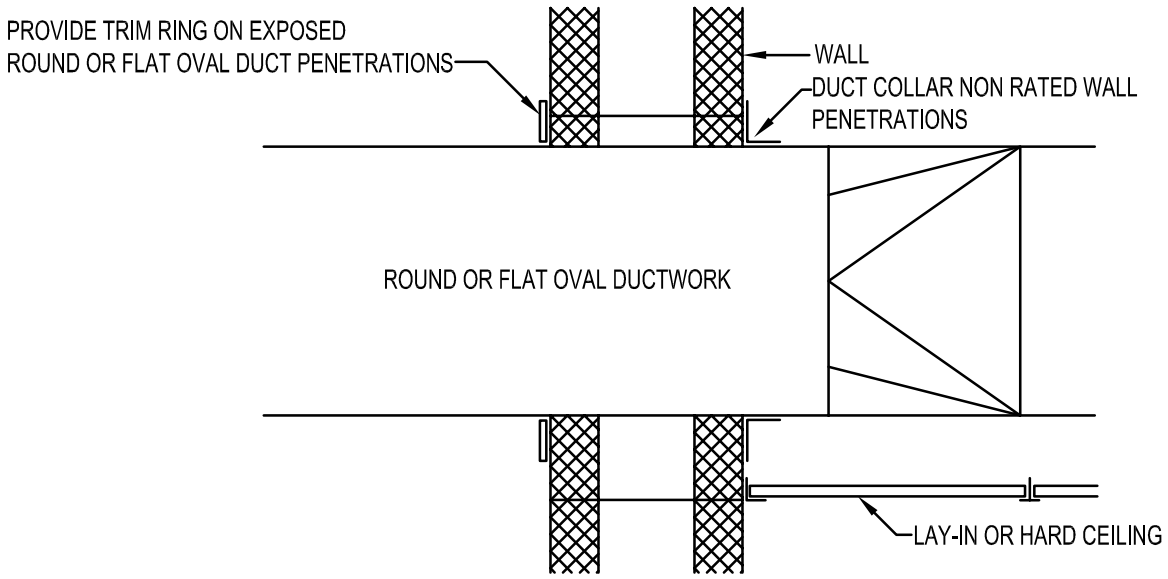

M2.13

EXPOSED DUCT PENETRATION DETAIL

SCALE: NONE

WAKE COUNTY PUBLIC SCHOOL SYSTEM
111 Corning Road,Suite 190
Cary, NC 27518
(919) 588-3608

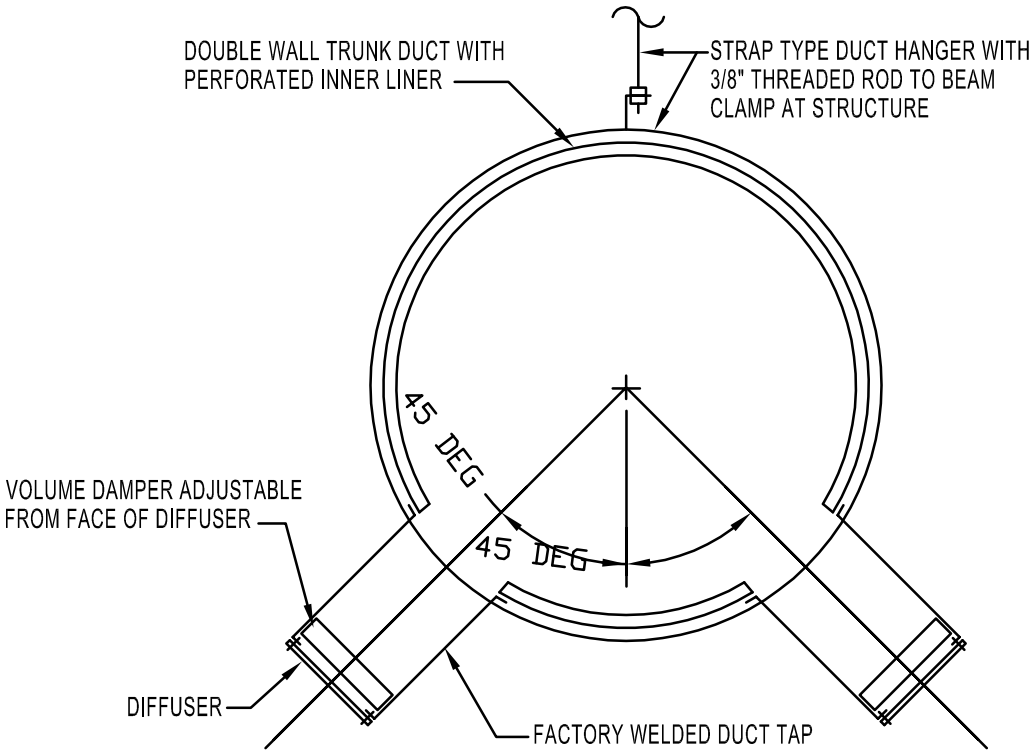

M2.14 EXPOSED SPIRAL DUCT DETAIL

SCALE: NONE

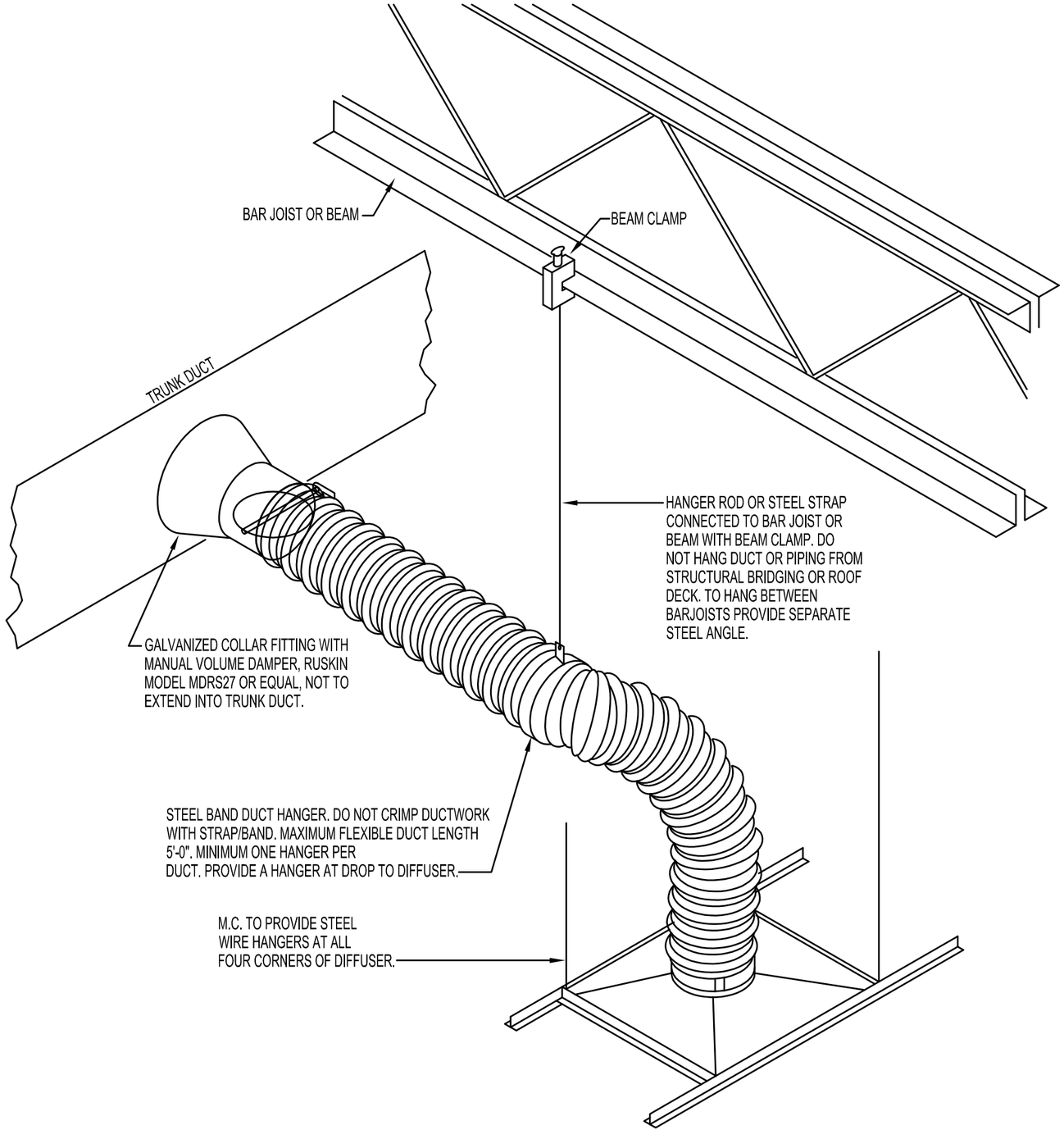

M2.15 FLEXIBLE DUCTWORK INSTALLATION DETAIL

SCALE: NONE

WAKE COUNTY PUBLIC SCHOOL SYSTEM
111 Corning Road,Suite 190
Cary, NC 27518
(919) 588-3608

WAKE COUNTY PUBLIC SCHOOL SYSTEM
111 Corning Road,Suite 190
Cary, NC 27518
(919) 588-3608

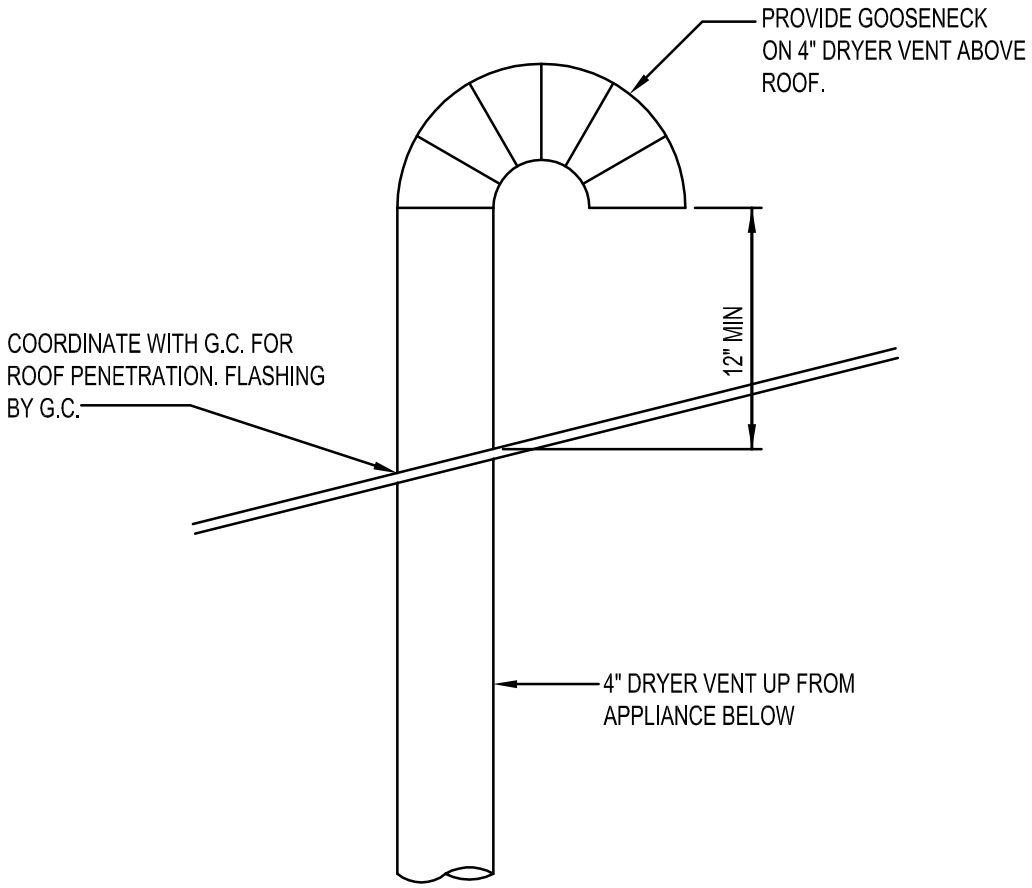

M2.16

DRYER VENT ROOF PENETRATION DETAIL

SCALE: NONE

WAKE COUNTY PUBLIC SCHOOL SYSTEM
111 Corning Road,Suite 190
Cary, NC 27518
(919) 588-3608

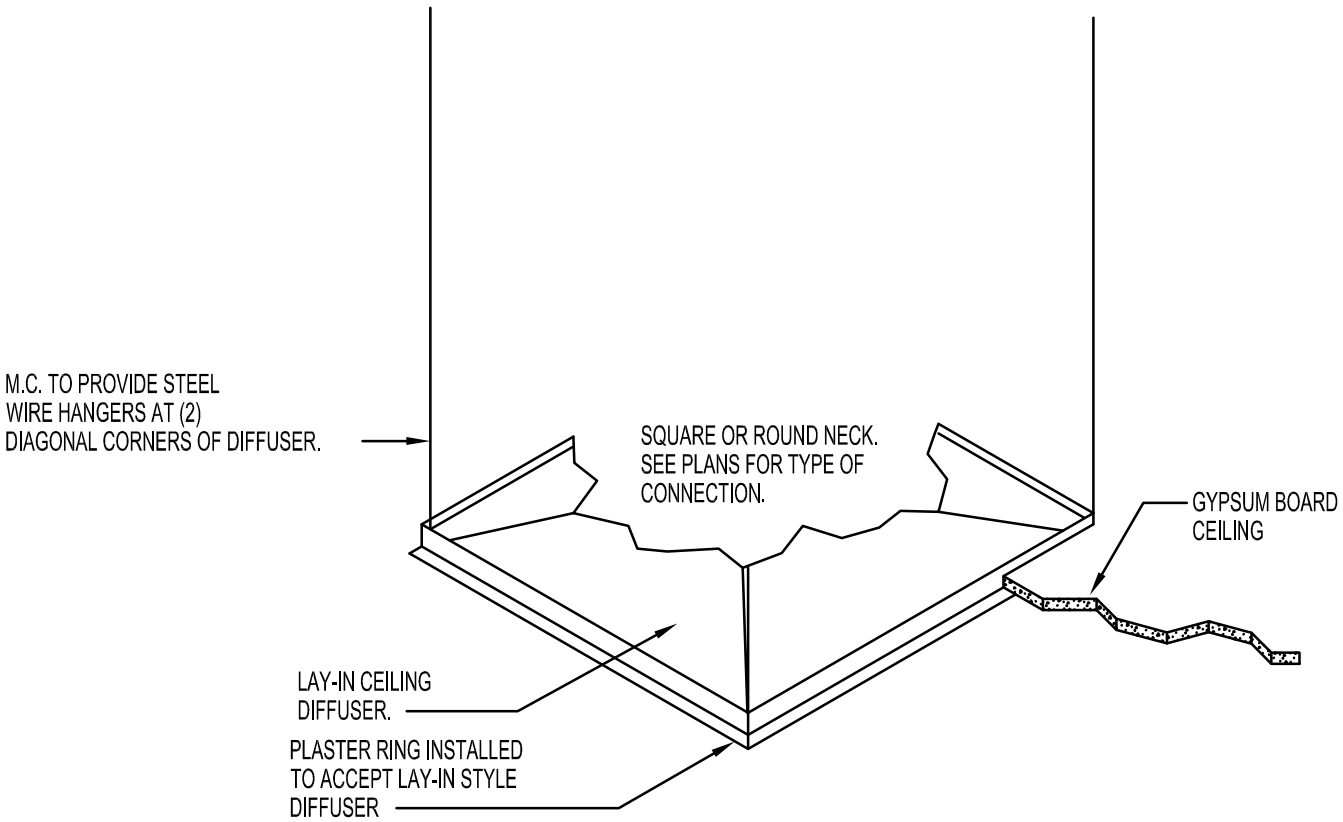

M2.21

GYPSUM CEILING DIFFUSER INSTALLATION DETAIL

SCALE: NONE

WAKE COUNTY PUBLIC SCHOOL SYSTEM
111 Corning Road,Suite 190
Cary, NC 27518
(919) 588-3608

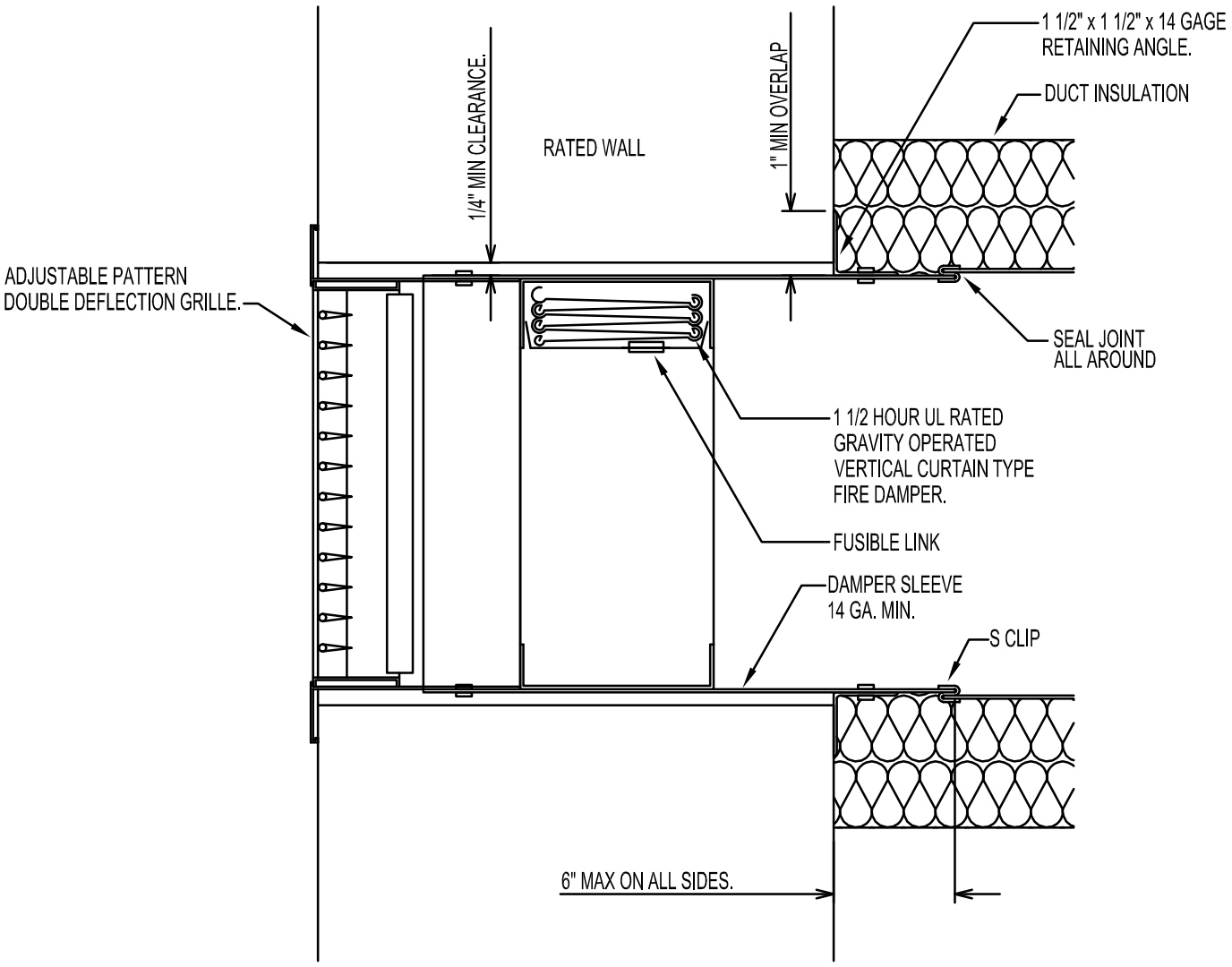

M2.22

RATED SIDEWALL GRILLE DETAIL

SCALE: NONE

WAKE COUNTY PUBLIC SCHOOL SYSTEM
111 Corning Road,Suite 190
Cary, NC 27518
(919) 588-3608

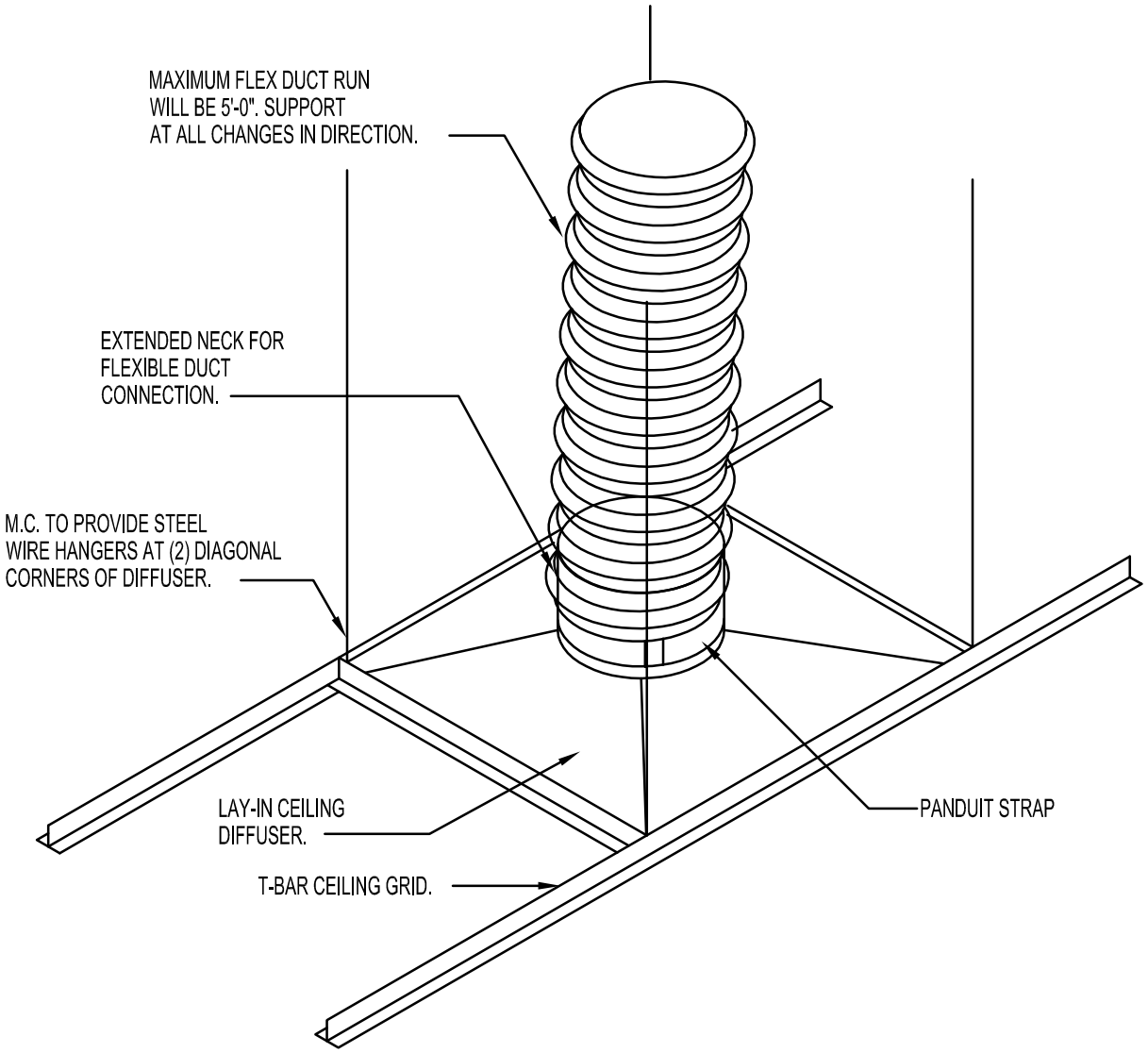

M2.23

ROUND NECK LAY-IN DIFFUSER DETAIL

SCALE: NONE

WAKE COUNTY PUBLIC SCHOOL SYSTEM
111 Corning Road,Suite 190
Cary, NC 27518
(919) 588-3608

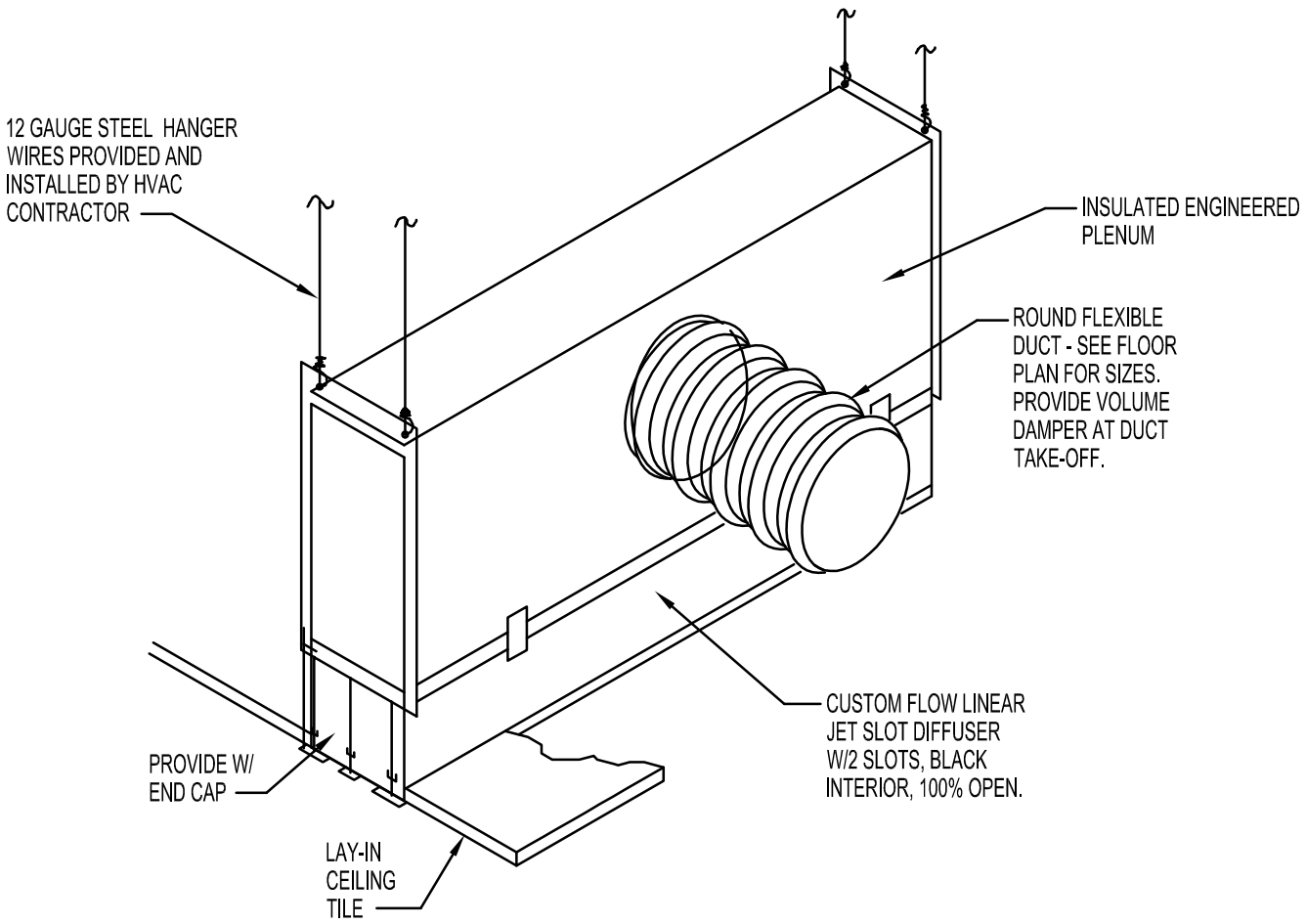

M2.24

SLOT DIFFUSER DETAIL

SCALE: NONE

WAKE COUNTY PUBLIC SCHOOL SYSTEM
111 Corning Road,Suite 190
Cary, NC 27518
(919) 588-3608

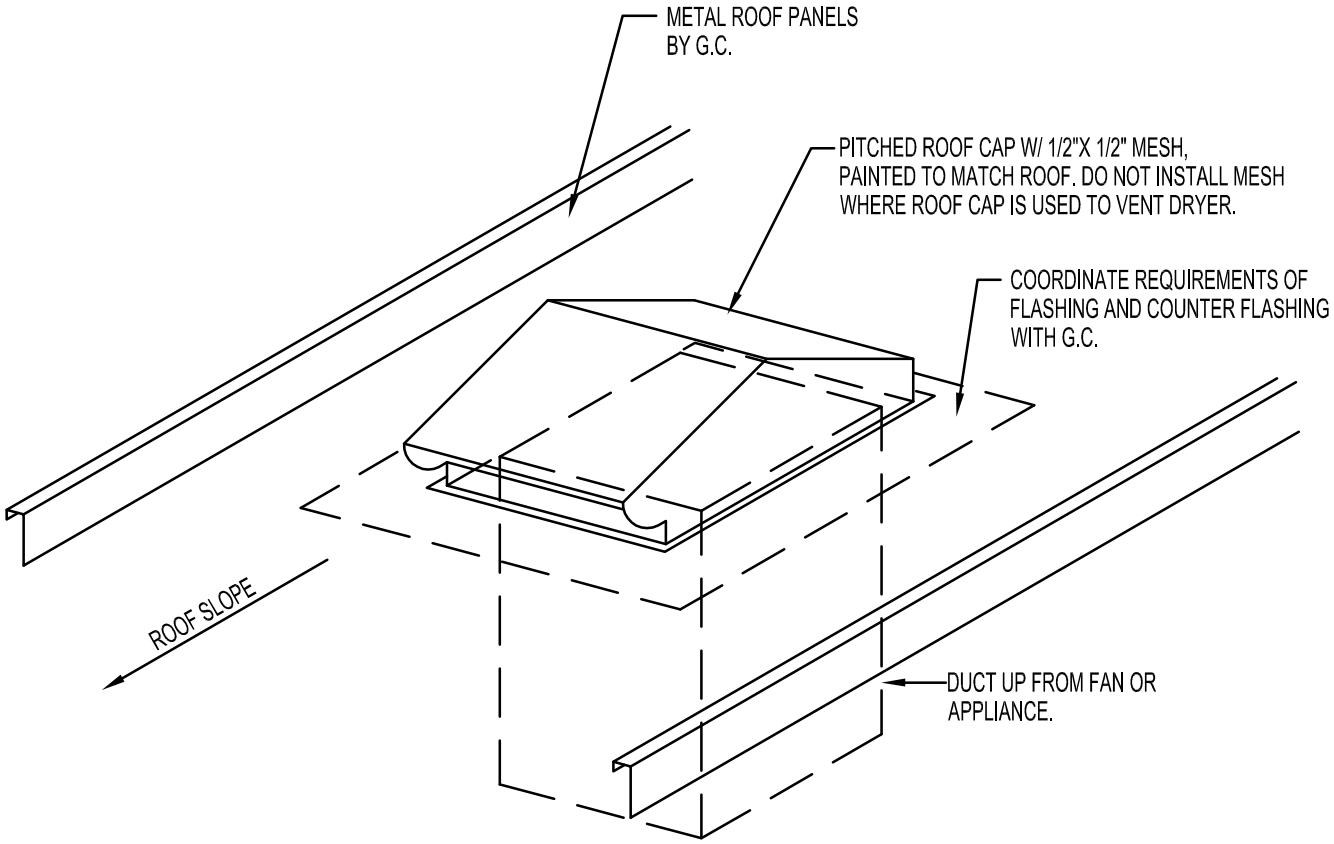

M2.31

SLOPED ROOF CAP DETAIL

SCALE: NONE

WAKE COUNTY PUBLIC SCHOOL SYSTEM
111 Corning Road,Suite 190
Cary, NC 27518
(919) 588-3608

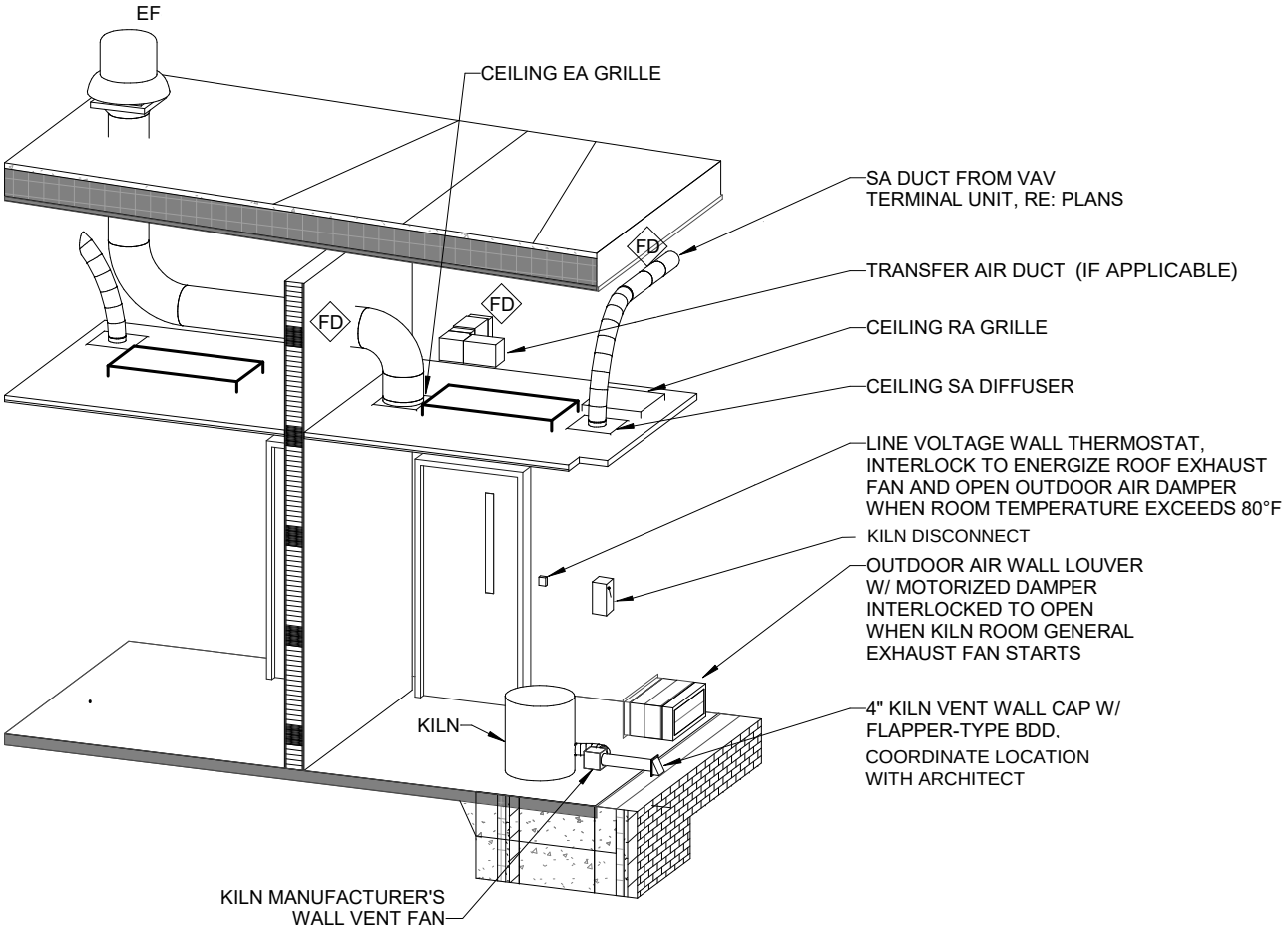

KILN ROOM HVAC DETAIL

Scale: N.T.S.

M2.41

KILN EXHAUST DETAIL

SCALE: NONE

WAKE COUNTY PUBLIC SCHOOL SYSTEM
111 Corning Road,Suite 190
Cary, NC 27518
(919) 588-3608

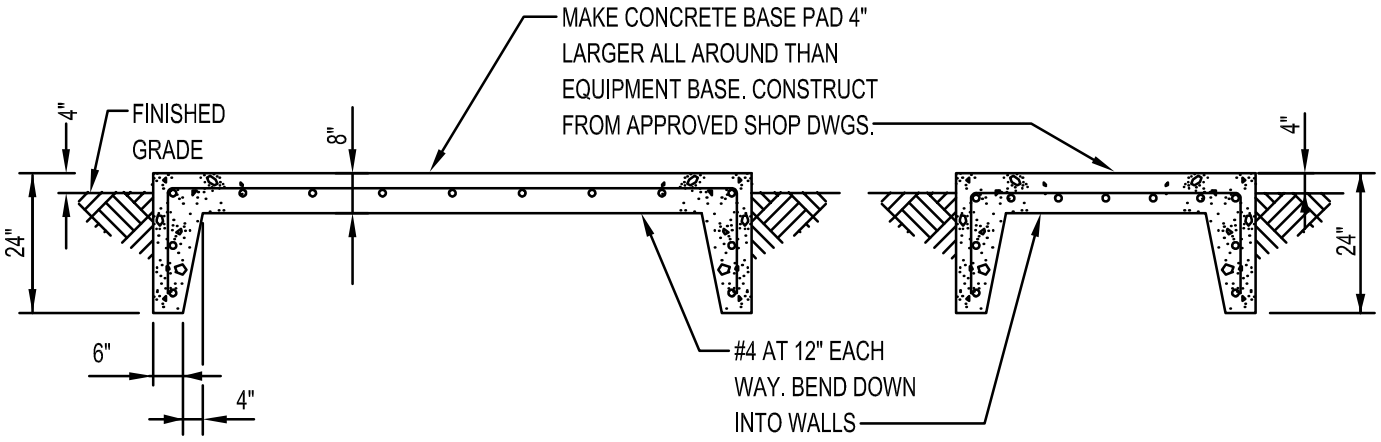

Side Elevation

End Elevation

M2.51

CONCRETE EQUIPMENT PAD DETAIL

SCALE: NONE

WAKE COUNTY PUBLIC SCHOOL SYSTEM
111 Corning Road,Suite 190
Cary, NC 27518
(919) 588-3608

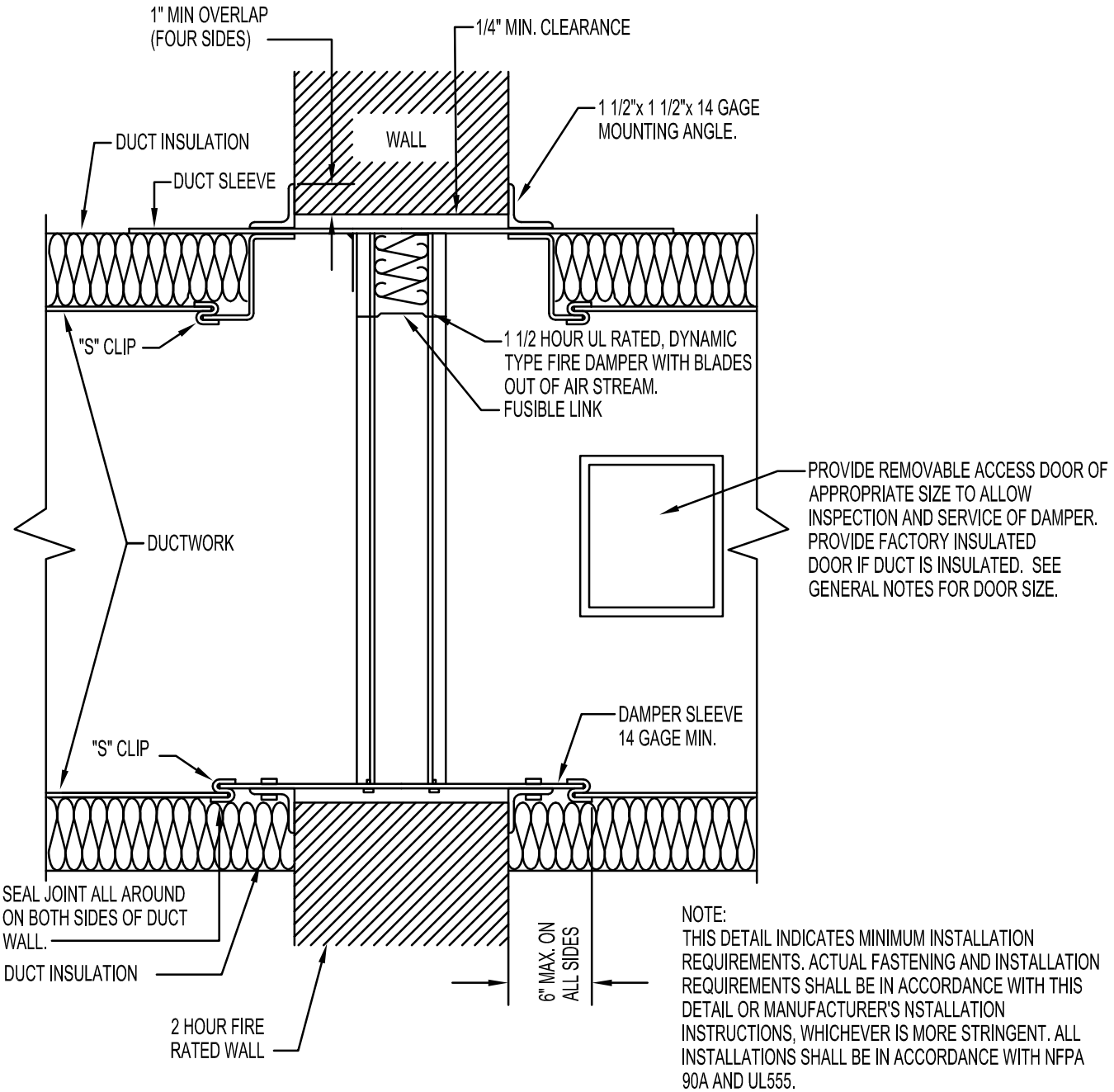

NOTE:
THIS DETAIL INDICATES MINIMUM INSTALLATION REQUIREMENTS. ACTUAL FASTENING AND INSTALLATION REQUIREMENTS SHALL BE IN ACCORDANCE WITH THIS DETAIL OR MANUFACTURER'S NSTALLATION INSTRUCTIONS, WHICHEVER IS MORE STRINGENT. ALL INSTALLATIONS SHALL BE IN ACCORDANCE WITH NFPA 90A AND UL555.

M2.52

FIRE DAMPER DETAIL

SCALE: NONE

WAKE COUNTY PUBLIC SCHOOL SYSTEM
111 Corning Road,Suite 190
Cary, NC 27518
(919) 588-3608

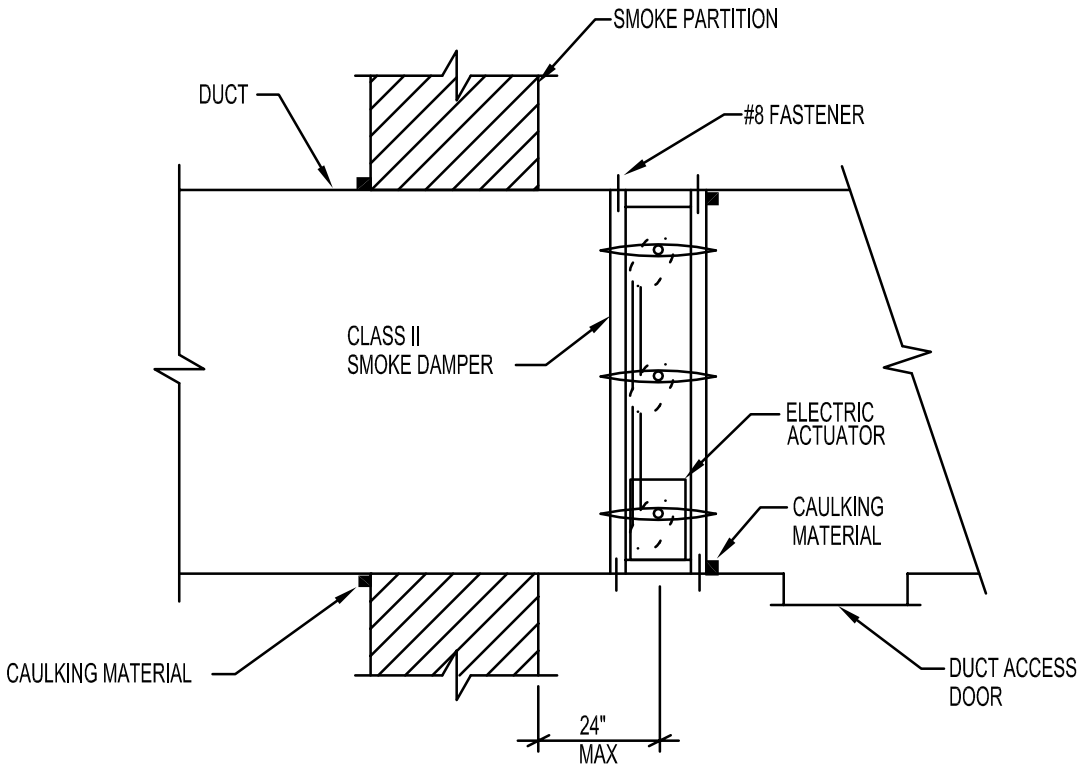

M2.53

SMOKE DAMPER DETAIL

SCALE: NONE

WAKE COUNTY PUBLIC SCHOOL SYSTEM
111 Corning Road,Suite 190
Cary, NC 27518
(919) 588-3608

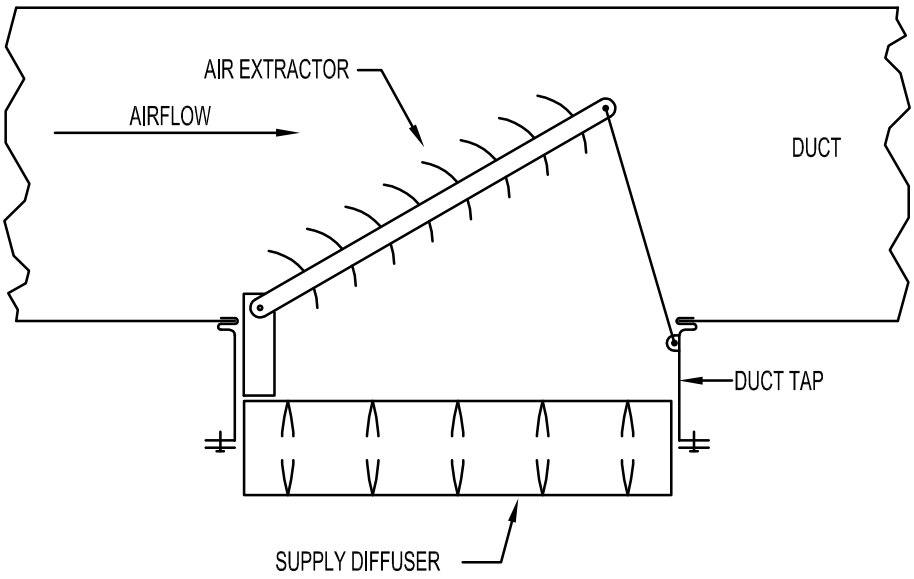

M2.54

AIR EXTRACTOR DETAIL

SCALE: NONE

WAKE COUNTY PUBLIC SCHOOL SYSTEM
111 Corning Road,Suite 190
Cary, NC 27518
(919) 588-3608

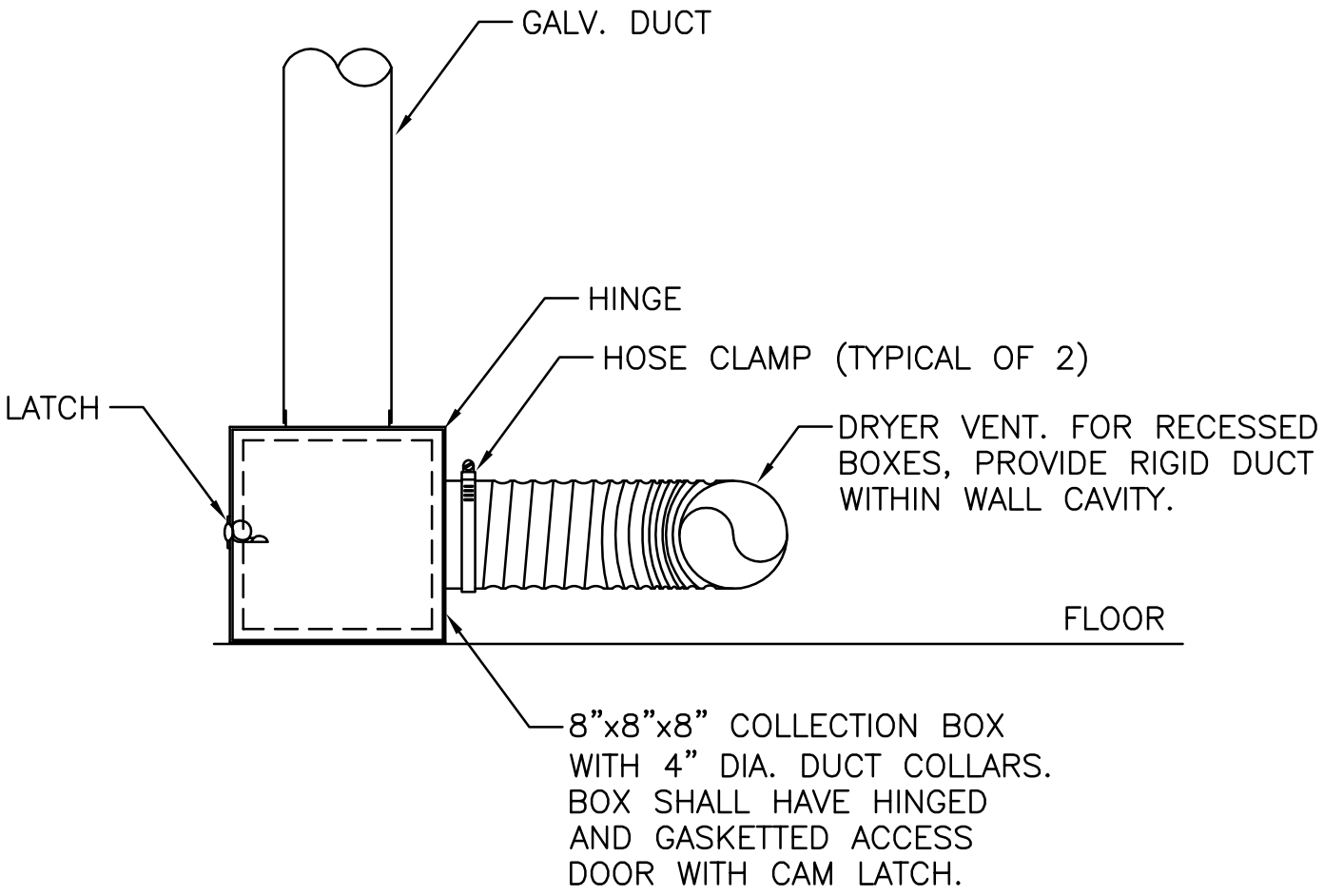

M2.55

DRYER VENT COLLECTION BOX DETAIL

SCALE: NONE

WAKE COUNTY PUBLIC SCHOOL SYSTEM
111 Corning Road,Suite 190
Cary, NC 27518
(919) 588-3608

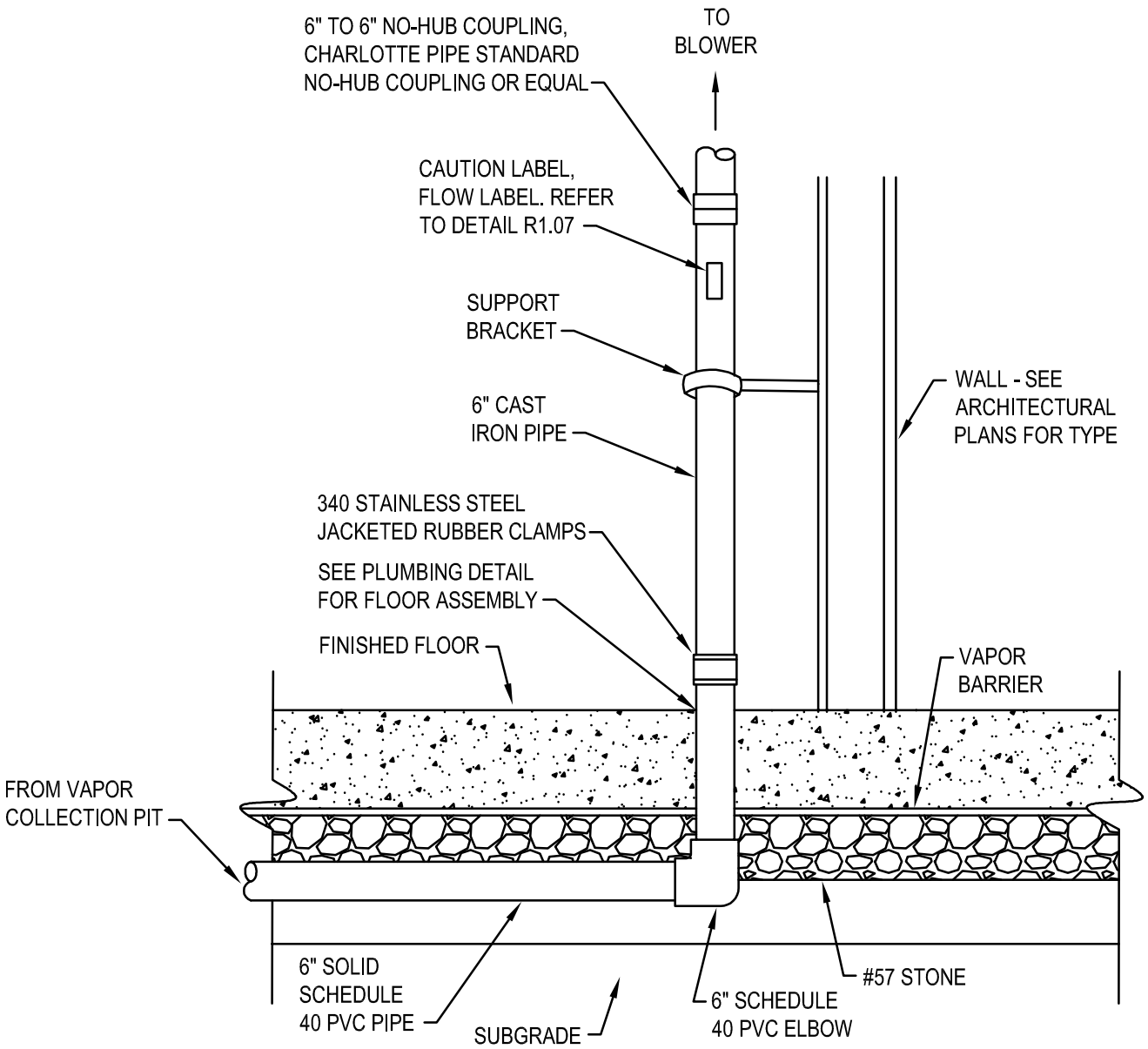

V1.01

VAPOR MITIGATION SYSTEM - VENT PIPE AT RISER DETAIL

SCALE: NONE

WAKE COUNTY PUBLIC SCHOOL SYSTEM
111 Corning Road,Suite 190
Cary, NC 27518
(919) 588-3608

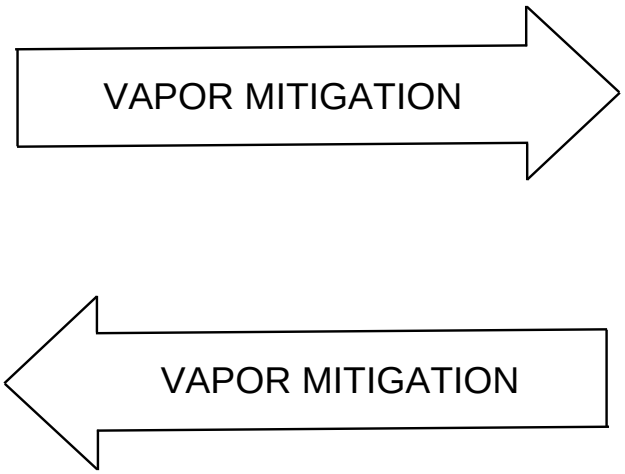

V1.02 VAPOR MITIGATION SYSTEM - FLOW LABEL DETAIL

SCALE: NONE

WAKE COUNTY PUBLIC SCHOOL SYSTEM
111 Corning Road,Suite 190
Cary, NC 27518
(919) 588-3608

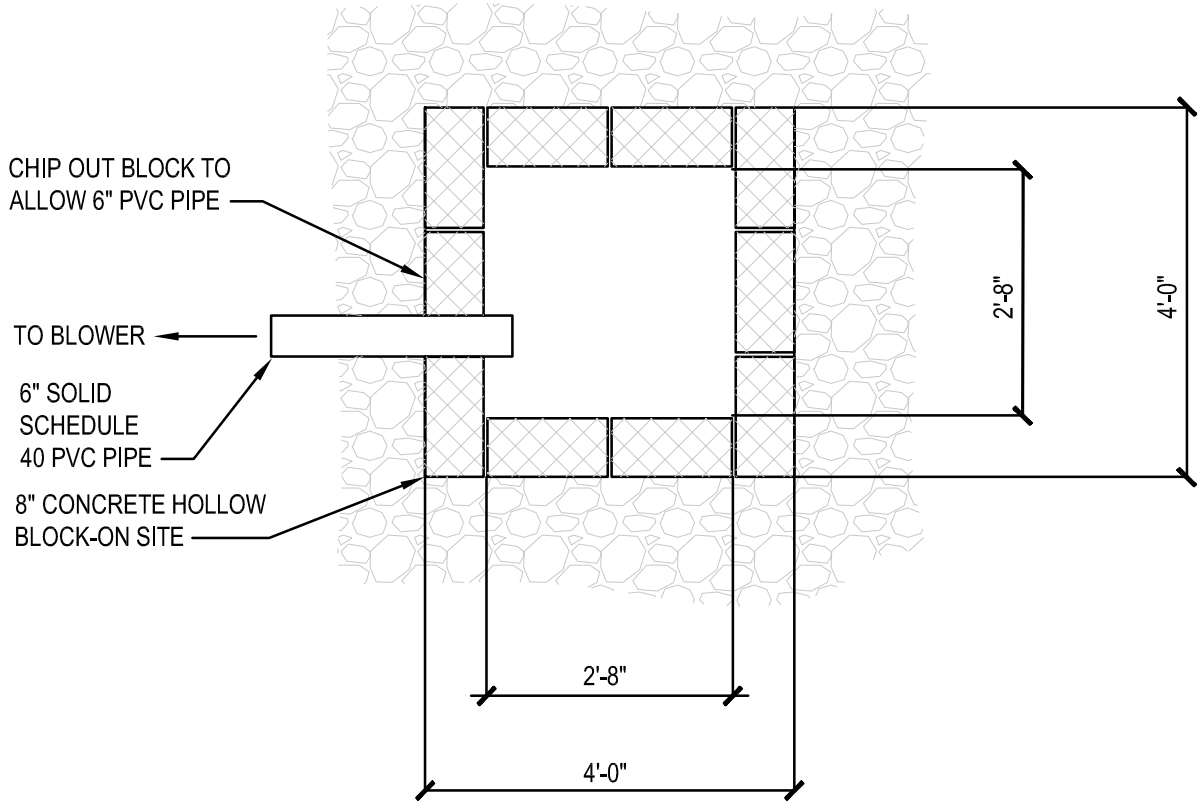

TOP VIEW

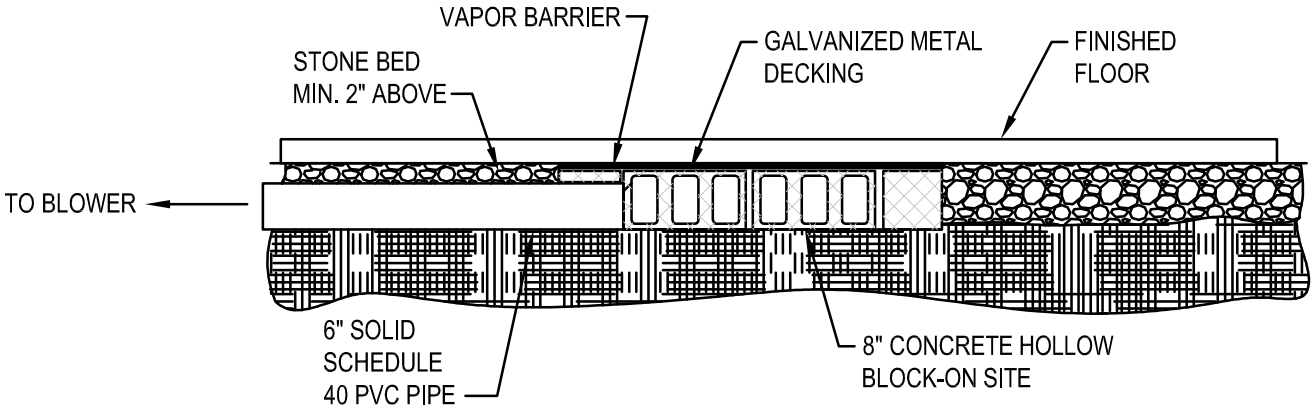

SIDE VIEW

V1.03

VAPOR MITIGATION SYSTEM - SUCTION PIT DETAIL

SCALE: NONE

WAKE COUNTY PUBLIC SCHOOL SYSTEM
111 Corning Road,Suite 190
Cary, NC 27518
(919) 588-3608

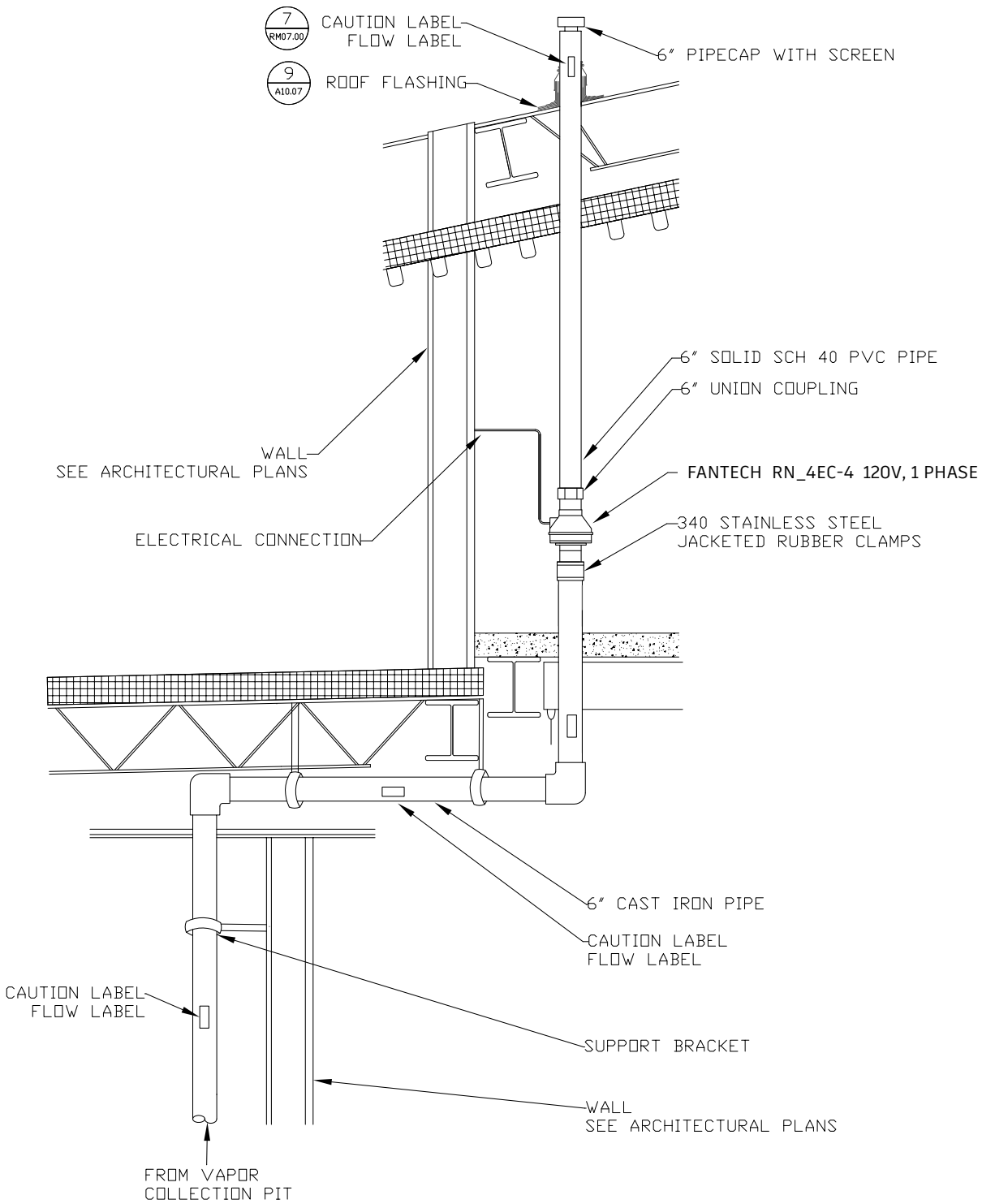

V1.04

VAPOR MITIGATION SYSTEM - FAN LOCATION DETAIL

SCALE: NONE

WAKE COUNTY PUBLIC SCHOOL SYSTEM
111 Corning Road,Suite 190
Cary, NC 27518
(919) 588-3608

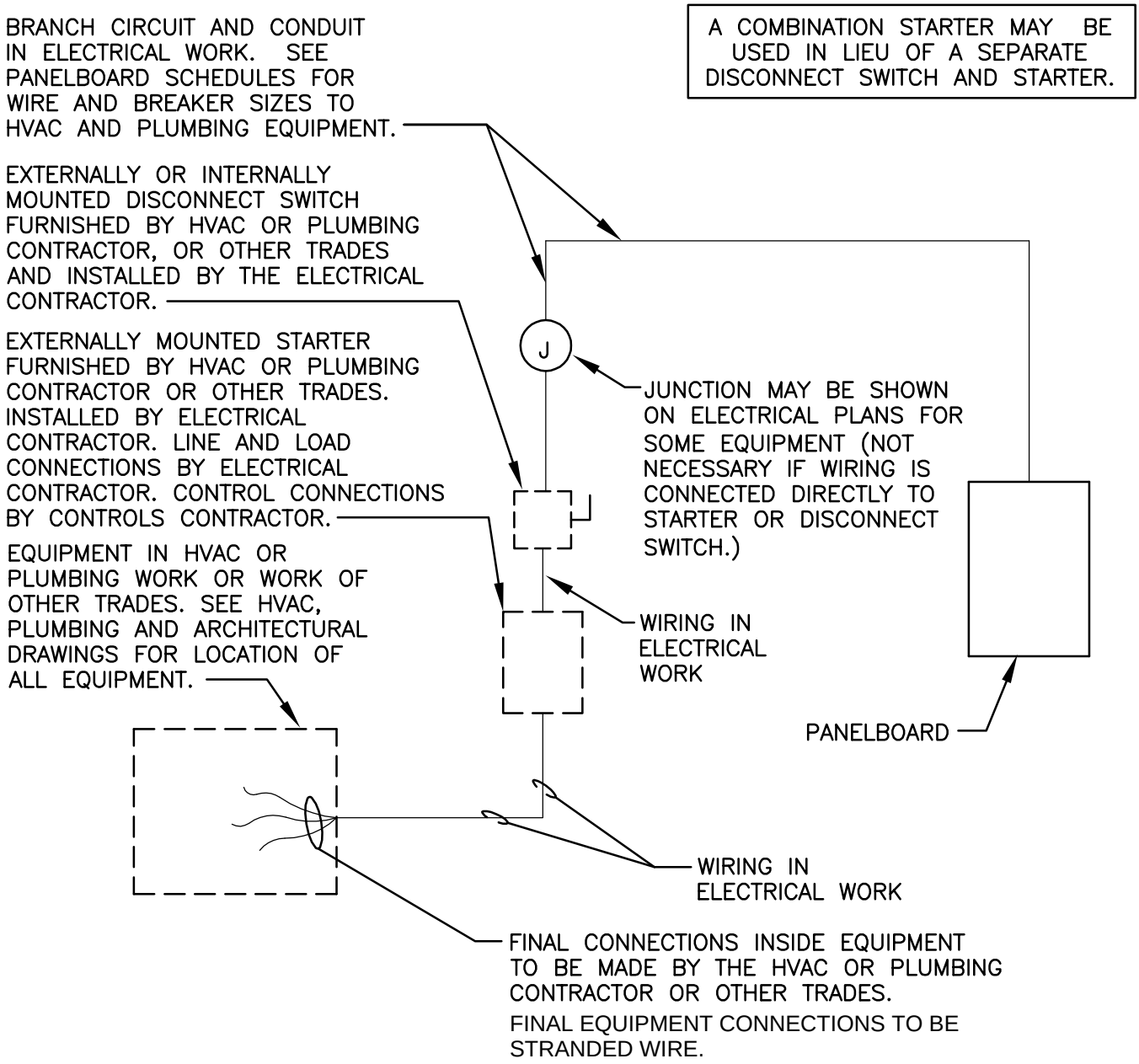

E1.01 TYPICAL MECH EQUIPMENT ELECTRICAL CONNECTION DETAIL

SCALE: NONE

WAKE COUNTY PUBLIC SCHOOL SYSTEM
111 Corning Road,Suite 190
Cary, NC 27518
(919) 588-3608

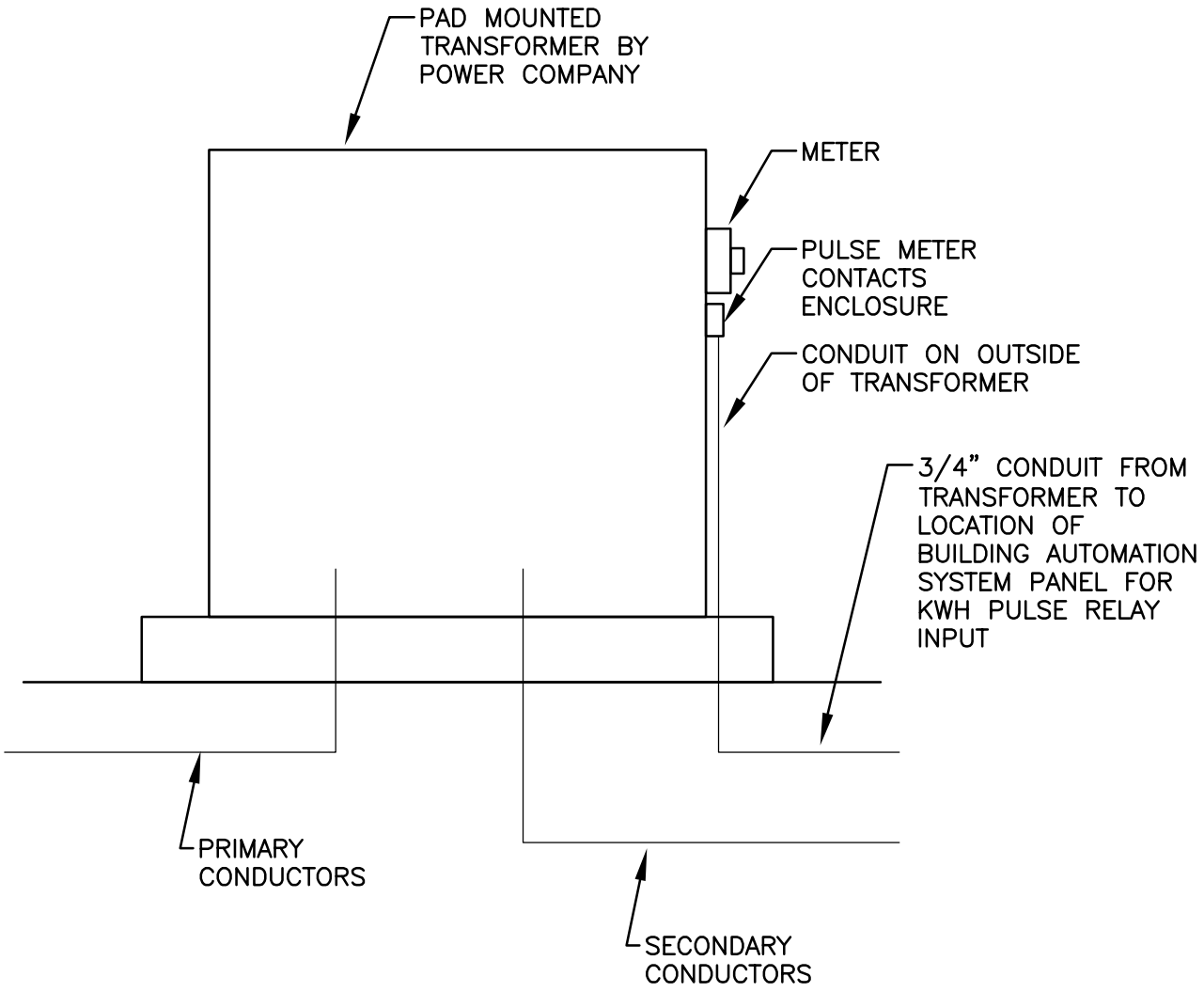

E1.02 STANDARD PULSE RELAY CONDUIT DETAIL

SCALE: NONE

WAKE COUNTY PUBLIC SCHOOL SYSTEM
111 Corning Road,Suite 190
Cary, NC 27518
(919) 588-3608

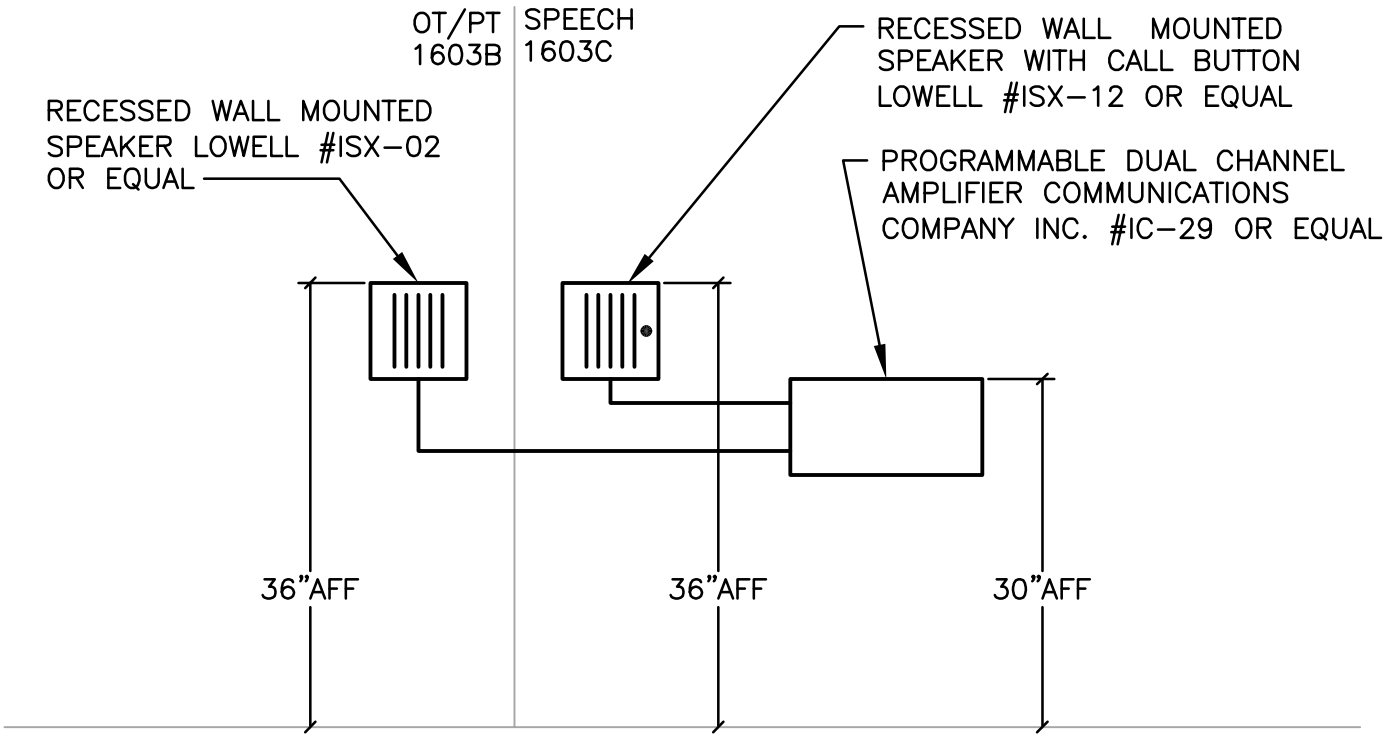

NOTES:

1. WALL MOUNTED SPEAKERS REQUIRE A STANDARD 2-GANG BACKBOX THAT WILL ACCOMODATE A 2 1/2" DEEP DEVICE.
2. PROVIDE ALL COMPONENTS FOR A COMPLETE OPERATING SYSTEM.
3. PROVIDE ALL WIRING PER MANUFACTURERS SPECIFICATIONS.
4. PROVIDE SPEAKER-TO-SPEAKER, PUSH TO TALK CONNECTION WITH SPEAKER IN SPEECH ALWAYS RETURNING TO LISTEN.
5. CONNECT TO NEAREST RECEPTACLE CIRCUIT.

E1.03

OT/PT & SPEECH LOCAL INTERCOM SYSTEM DETAIL

SCALE: NONE

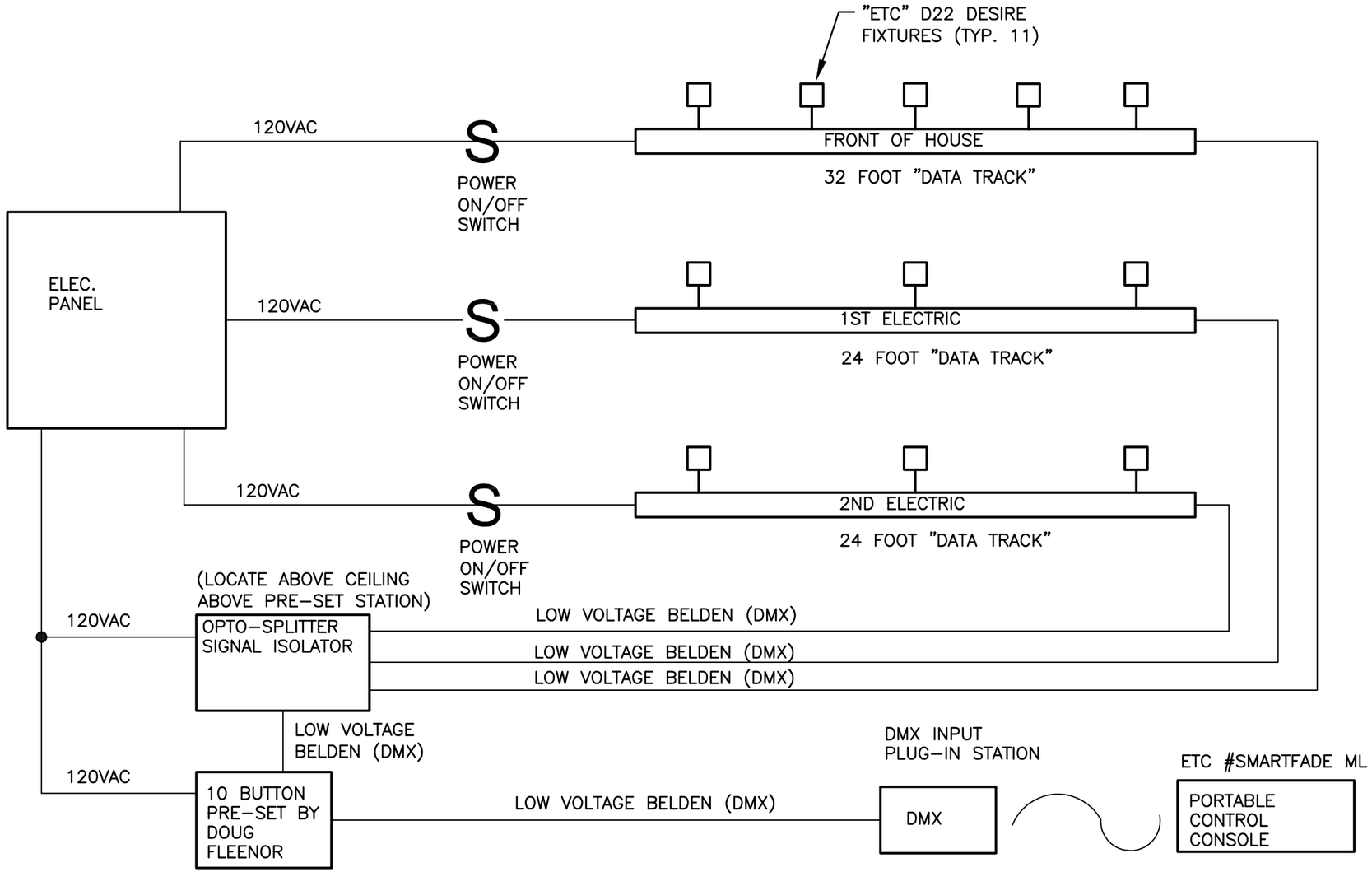

PLATFORM DIMMING RISER GENERAL NOTES:

1. THE PLATFORM DIMMING SYSTEM IS A PREFERRED BRAND ALTERNATE, REFER TO SPECIFICATIONS.
2. PROVIDE ALL NECESSARY PARTS, SUPPORTS, AND ACCESSORIES FOR A COMPLETE SYSTEM.
3. ALL WIRING SHALL BE IN CONDUIT (3/4" MINIMUM).
4. COORDINATE TRACK AND FIXTURE LOCATION WITH MANUFACTURER FOR OPTIMUM LOCATION.
5. REFER TO PLANS FOR EXACT EQUIPMENT LOCATION AND CIRCUIT INFORMATION.
6. DMX CABLING NOT SHOWN ON PLANS FOR CLARITY.

E1.04

PLATFORM DIMMING RISER DIAGRAM

SCALE: NONE

WAKE COUNTY PUBLIC SCHOOL SYSTEM
111 Corning Road,Suite 190
Cary, NC 27518
(919) 588-3608

WAKE COUNTY PUBLIC SCHOOL SYSTEM
111 Corning Road,Suite 190
Cary, NC 27518
(919) 588-3608

GENERAL NOTES:

A. EMERGENCY LIGHTING TRANSFER DEVICE (ELTD) MANUFACTURER: HUBBELL #DTS OR EQUAL.

B. ELTD SHALL BE PROVIDED WITH FIXTURE.

C. 0-10V DIMMING DRIVER SUPPLIED BY NORMAL POWER AND CONTROLLED WITH 0-10V DIMMING SWITCHES.

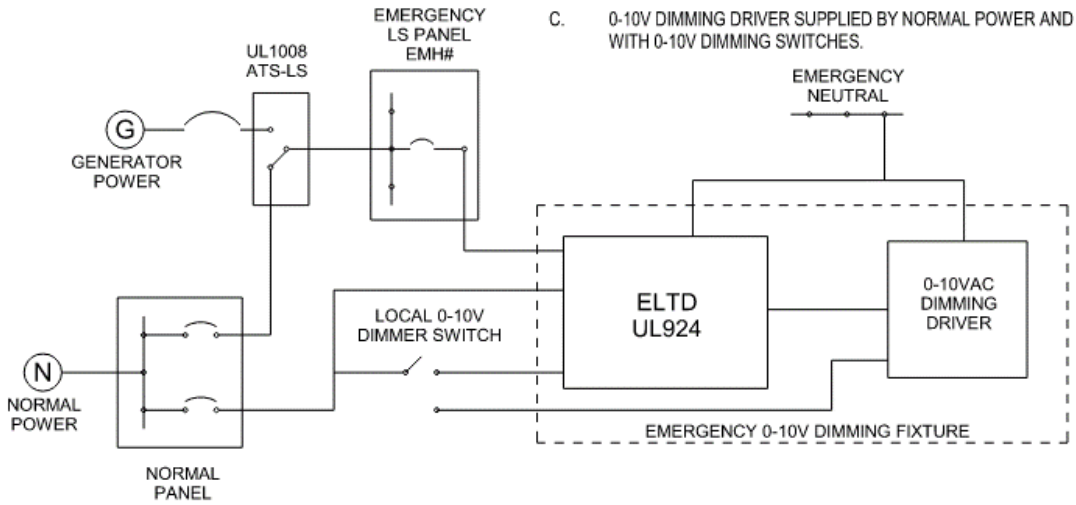

NORMAL OPERATION (Shown Above)

AC LIGHTING BALLAST SUPPLIED BY NORMAL PANEL & CONTROLLED BY WALL SWITCH AND 0-10V DIMMER

INVERTER OPERATION

1. INVERTER SUPPLIED BY NORMAL CIRCUIT INDEPENDENT OF WALL SWITCH POSITION.
2. INVERTER SHALL HAVE AUXILIARY CONTACTS TO DRIVE THE 0-10V SIGNAL TO FULL BRIGHTNESS IN THE EVENT OF POWER FAILURE.

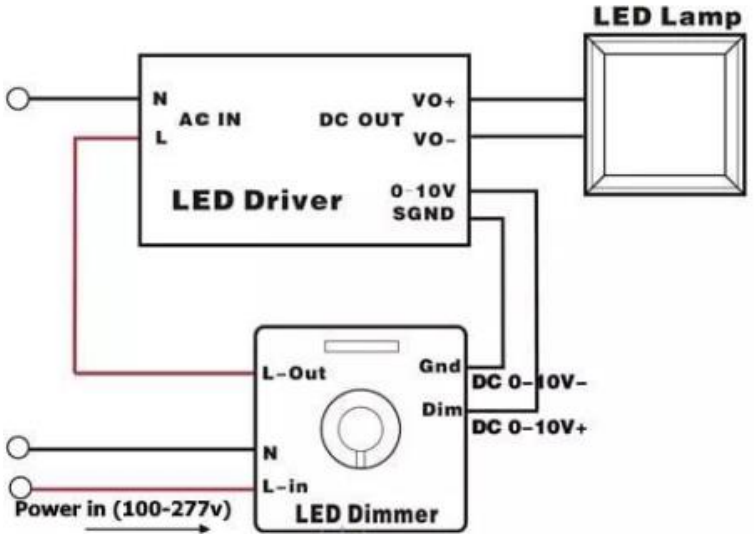

E1.05

0v-10v DIMMING SWITCH DIAGRAM

SCALE: NONE

CABLE SCHEDULE

MARKS DESCRIPTION

(1) 1-4 PAIR Cat6 CABLE FOR DATA PER PORT.
(2) MULTIPAIR Cat3 CABLE FOR VOICE DISTRIBUTION.
(3) 1 - 2 STRAND SINGLE MODE FIBER CABLE FOR DATA TO SWITCH ENCLOSURE.
(4) MULTIPLE STRANDS SINGLE MODE FIBER CABLE FOR DATA DISTRIBUTION TO MAIN BUILDING, AND ALL OUT-BUILDINGS.
(5) COPPER PATCH CORDS TO BE PROVIDED BY CONTRACTOR AND INSTALLED BY WCPSS.
(6) PATCH COREDS TO BE PROVIDED BY WCPSS.
(7) ACCESS POINT OR CAMERA DROP TERMINATED WITH A MODULAR RJ45 PLUG.
(8) TYPICAL TCO - REFER TO 270000 FOR REQUIRED QUANTITY PER LOCATION.
(9) TCO FOR WALL MOUNTED TELEVISION.
(10) TYP FIRE PANEL DEMARCATION POINT
(11) TYP SECURITY DEMARCATION POINT
(12) TYP BUILDING SYSTEM CONTROL DEMARCATION POINT
(13) FOUR POST RACK (TWO RACKS FOR ELEMENTARY AND MIDDLE, THREE FOR HIGH SCHOOLS.) POSTS ARE TO BE INSTALLED WITH 32" FRONT TO BACK.
(14) 24 PORT PATCH PANEL TO CROSS CONNECT "VOICE" CONNECTIONS FOR LIFE SAFETY,BUILDING CONTROL, SECURITY, AND INTERCOM SYSTEMS. PORTS SHOULD CONNECT TO PORTS 1 - 24 ON COPPER DATA PATCH PANEL.

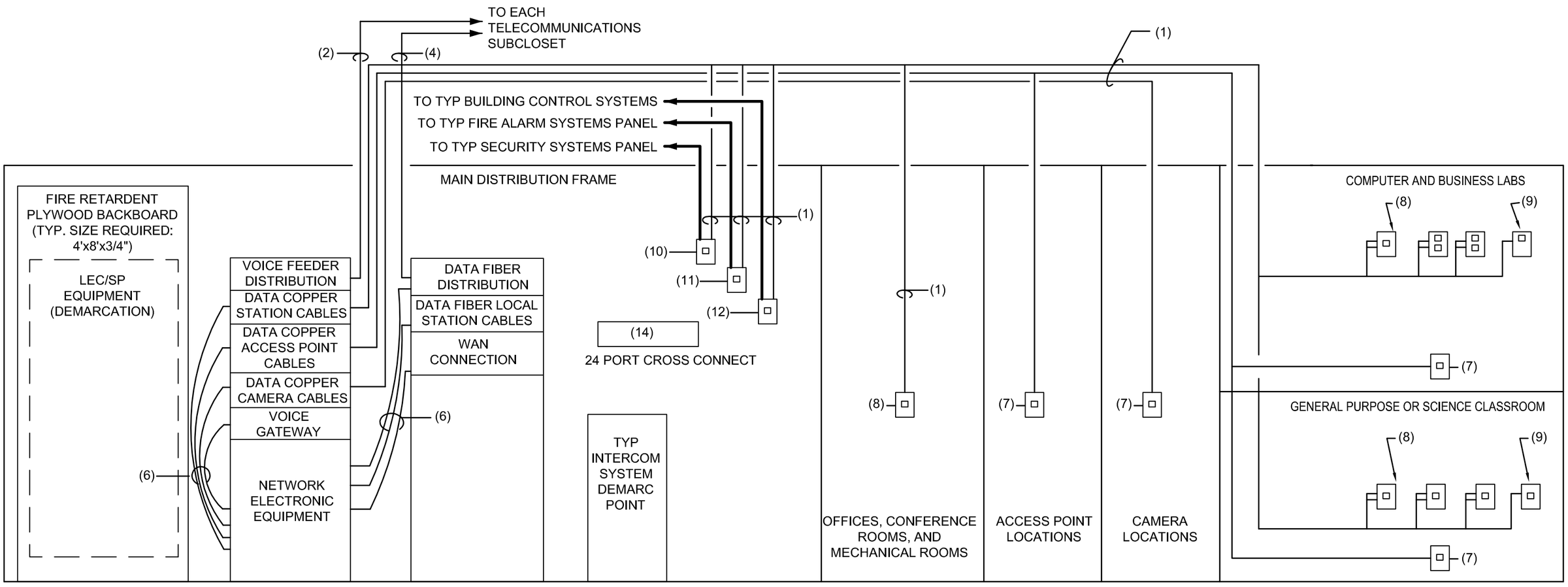

E2.00

MAIN TELECOMMUNICATIONS DISTRIBUTION ROOM TYPICAL DESIGN

SCALE: NONE

WAKE COUNTY PUBLIC SCHOOL SYSTEM
111 Corning Road,Suite 190
Cary, NC 27518
(919) 588-3608

CABLE SCHEDULE

MARKS	DESCRIPTION
(1)	1 - 4 PAIR Cat6 CABLE FOR DATA PER PORT.
(2)	MULTI-PAIR Cat3 CABLE FOR VOICE DISTRIBUTION.
(3)	1 - 2 STRAND MULTIMODE FIBER CABLE FOR DATA TO SWITCH ENCLOSURE.
(4)	1 - 6 STRAND MULTIMODE FIBER CABLE FOR DATA TO EACH REBOX CABINET IN COMPUTER LAB AND BUSINESS LABS.
(5)	MULTIPLE STRANDS ON MULTIMODE FIBER CABLE FOR DATA DISTRIBUTION.
(6)	COPPER PATCH CORDS TO BE PROVIDED BY CONTRACTOR AND INSTALLED BY WCPSS.
(7)	PATCH CORDS TO BE PROVIDED AND INSTALLED BY WCPSS.
(8)	ACCESS POINT OR CAMERA DROP TERMINATED WITH A MODULAR RJ45 PLUG.
(9)	TYPICAL TCO - REFER TO 270000 FOR REQUIRED QUANTITY PER LOCATION.
(10)	TCO FOR INTERACTIVE WHITE BOARD.
(11)	TYP FIRE PANEL DEMARCATION POINT
(12)	TYP SECURITY DEMARCATION POINT
(13)	TYP BUILDING SYSTEM CONTROL DEMARCATION POINT
(14)	TYP RE4 REBOX CABINET IN EACH COMPUTER AND BUSINESS LAB

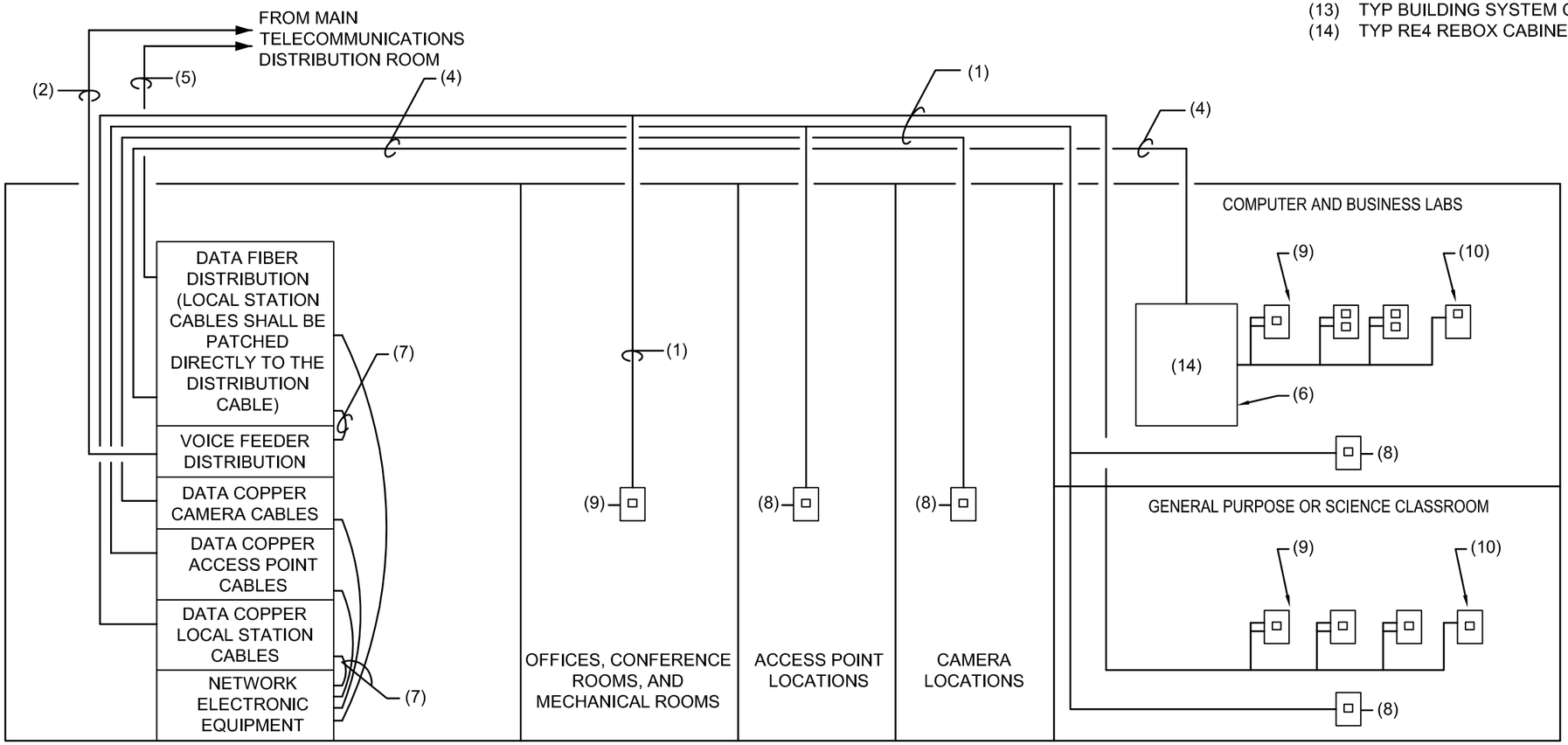

E2.01

TELECOMMUNICATIONS SUBCLOSET TYPICAL DESIGN

SCALE: NONE

WAKE COUNTY PUBLIC SCHOOL SYSTEM
111 Corning Road,Suite 190
Cary, NC 27518
(919) 588-3608

CABLE SCHEDULE

MARKS	DESCRIPTION
(1)	1 - 4 PAIR Cat5e CABLE FOR DATA.
(2)	1 - 4 PAIR Cat5e CABLE FOR VOICE.
(3)	MULTI-PAIR Cat3 INDOOR/OUTDOOR CABLE FOR VOICE DISTRIBUTION.
(4)	1 – 12 STRAND MULTIMODE FIBER CABLE FOR DATA TO OPEN 7FT RACK IN SINGLE OR MODULAR COMPLEX TELECOMMUNICATIONS SUB CLOSET.

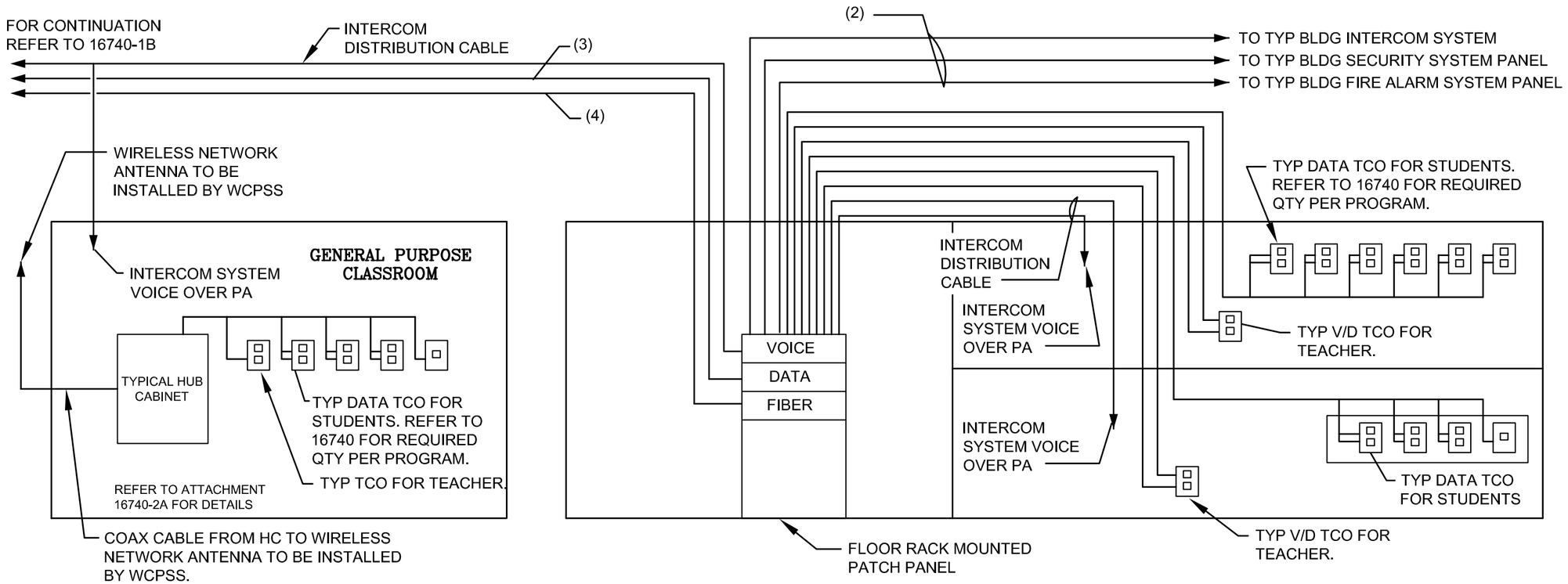

E2.02

MODULAR UNIT TELECOMMUNICATIONS TYPICAL DESIGN

SCALE: NONE

WAKE COUNTY PUBLIC SCHOOL SYSTEM
111 Corning Road,Suite 190
Cary, NC 27518
(919) 588-3608

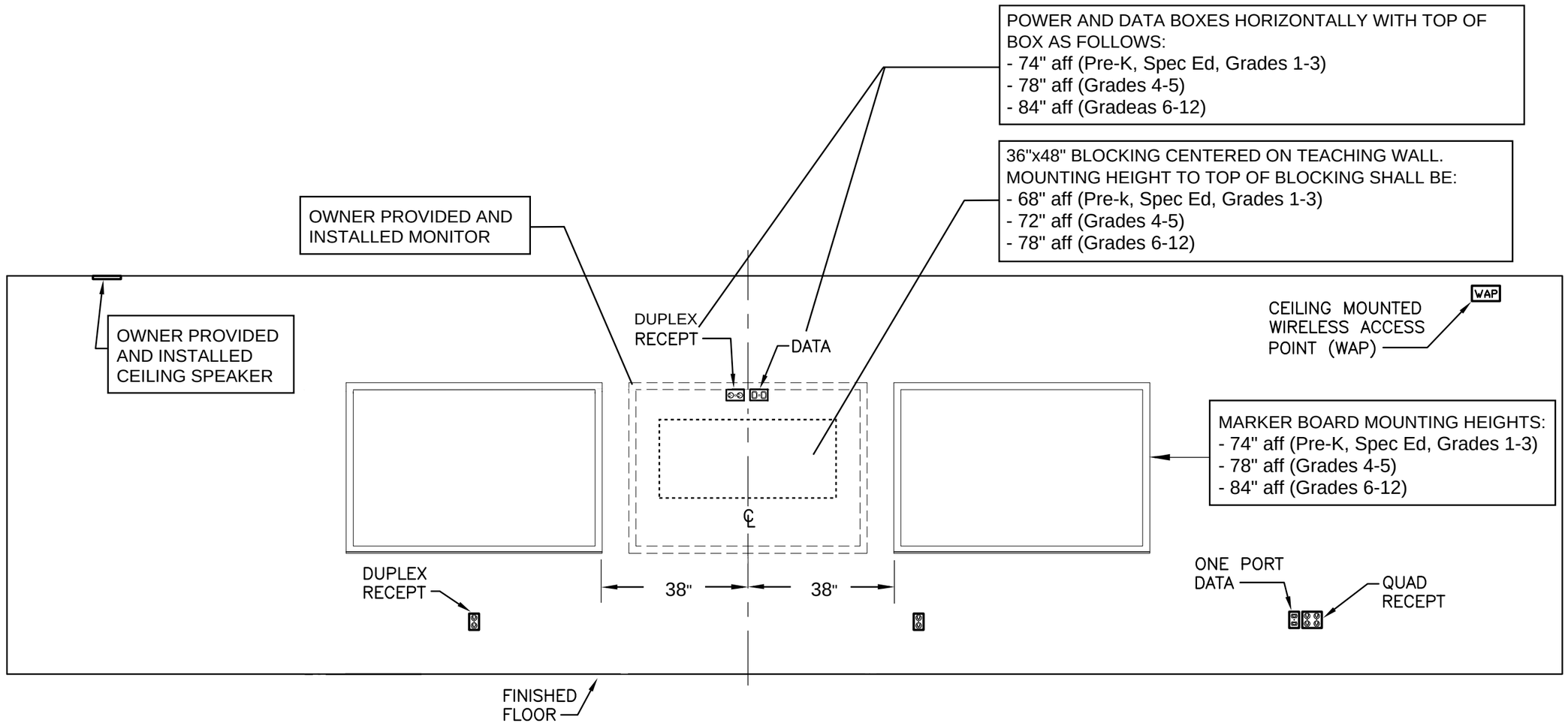

Designer is required to include this statement in the contract documents!

For metal stud wall construction, blocking installation must be approved by WCPSS Technology Services prior to installing GWB.

WCPSS Typical Teaching Wall Elevation
Instructional Technology Infrastructure
Revised November 2022

PRIMARY TEACHER WALL REQUIREMENTS - ARCHITECTUAL AND ELECTRICAL

SCALE: NONE

WAKE COUNTY PUBLIC SCHOOL SYSTEM
111 Corning Road,Suite 190
Cary, NC 27518
(919) 588-3608

NOTES:

1. ALL CONDUIT AND OUTLET BOXES BY ELECTRICAL CONTRACTOR.
2. ALL CAMERA CABLING SHALL BE GREEN AND PROVIDED AND INSTALLED BY STRUCTURED WIRING CONTRACTOR.
3. SEE SPECIFICATIONS FOR FURTHER INSTALLATION REQUIREMENTS.
4. PROVIDE 15'–0" SERVICE LOOP AT EACH CAMERA LOCATION.
5. PLEASE NOTE: BECAUSE THE CAMERAS ARE OWNER PROVIDED AND INSTALLED, THE CAMERAS MAY BE ISNTALLED LATER. THE CONTRACTOR SHALL PLACE A YELLOW DOT ON CEILING WITH THE RESPECTIVE CABLE NUMBER. THE CABLE NUMBER SHALL BE TAGGED ON THE CABLE JACKET ABOVE THE CEILING. COORDINATE ALL WORK WITH THE OWNERS IT AND SECURITY DEPARTMENTS PRIOR TO INSTALLATION/ROUGH–IN.
6. CAMERAS CABLES SHALL BE TERMINATED ON SEPARATE PATCH PANEL IN DATA RACK AT MDF/IDF TELECOM CLOSETS. NETWORK POE SWITCHES SHALL BE PROVIDED AND INSTALLED BY THE OWNER.
7. PLENUM RATED CAT–6 CAMERA DATA CABLE LENGTHS SHALL NOT EXCEED 90 METERS. CONTRACTOR SHALL TAKE CARE IN MAINTAINING THESE LENGTHS.
8. ALL CAMERA CABLES SHALL BE TESTED IN COMPLIANCE WITH THE DATA CABLE REQUIREMENTS.
9. REFER TO ARCHITECT'S DIVISION 1 ALTERNATES SECTION.

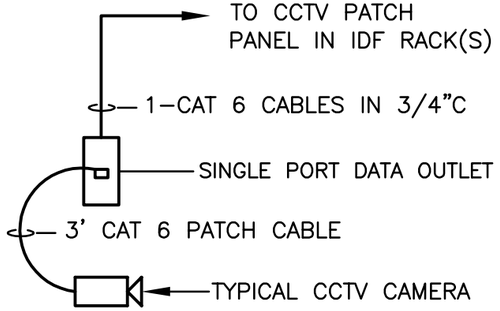

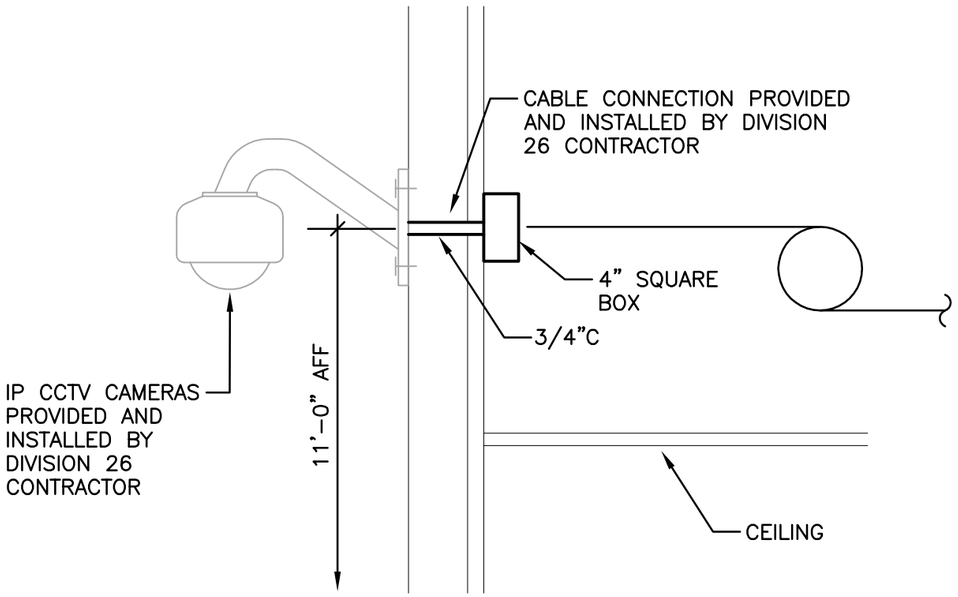

SECTION

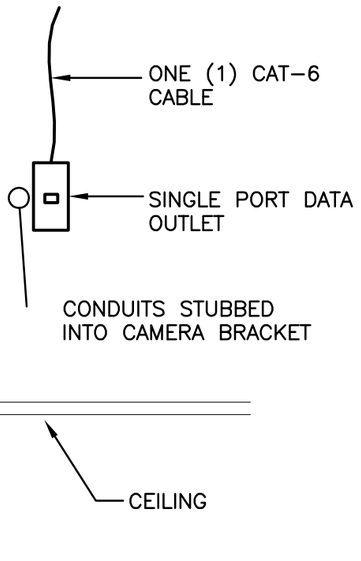

PLAN VIEW

E2.04

CCTV EXTERIOR CAMERA TERMINATION DETAIL

SCALE: NONE

WAKE COUNTY PUBLIC SCHOOL SYSTEM
111 Corning Road,Suite 190
Cary, NC 27518
(919) 588-3608

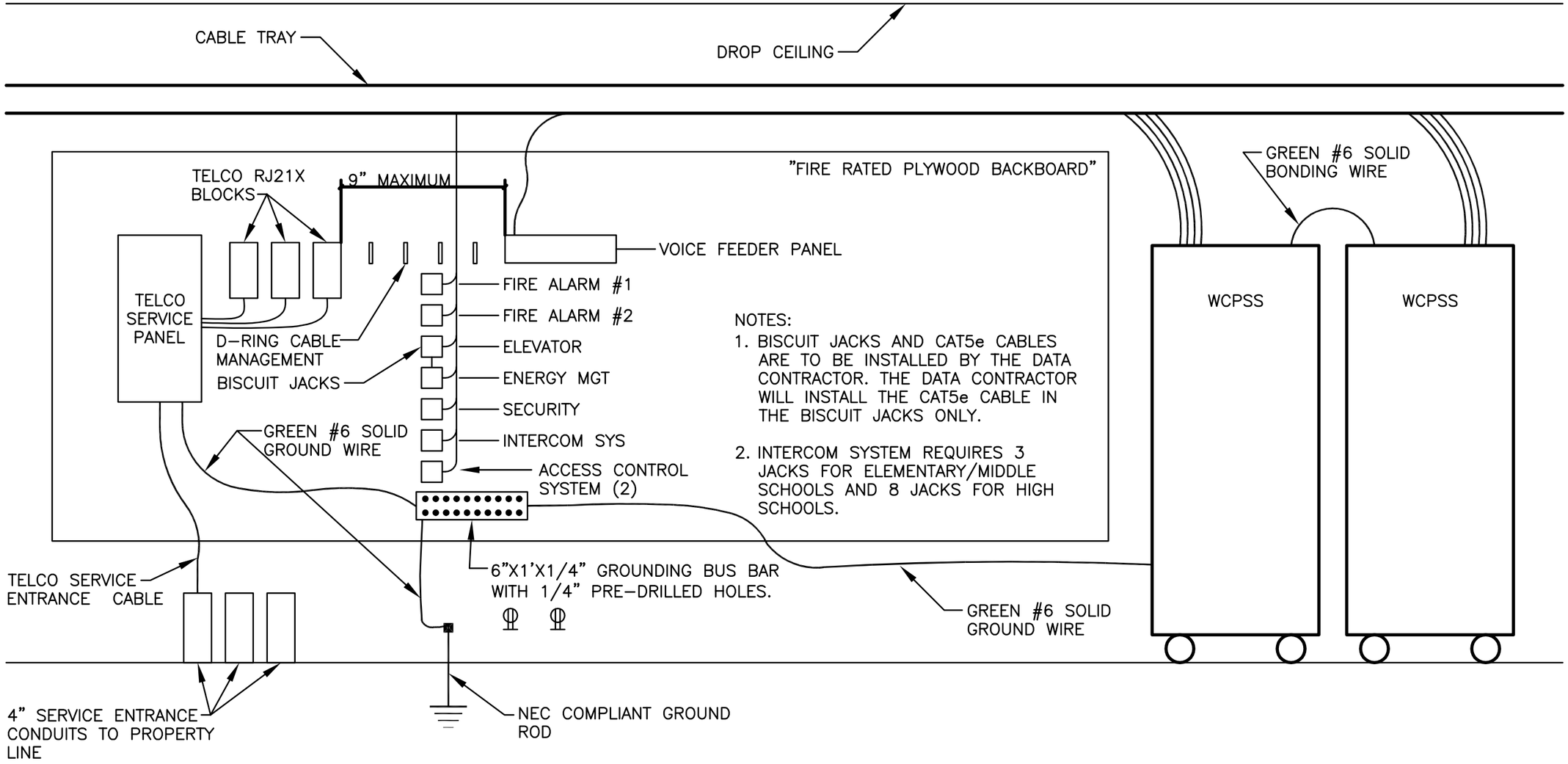

E2.05 MDF/DEMARC ROOM GROUNDING SYSTEM DETAIL

SCALE: NONE

WAKE COUNTY PUBLIC SCHOOL SYSTEM
111 Corning Road,Suite 190
Cary, NC 27518
(919) 588-3608

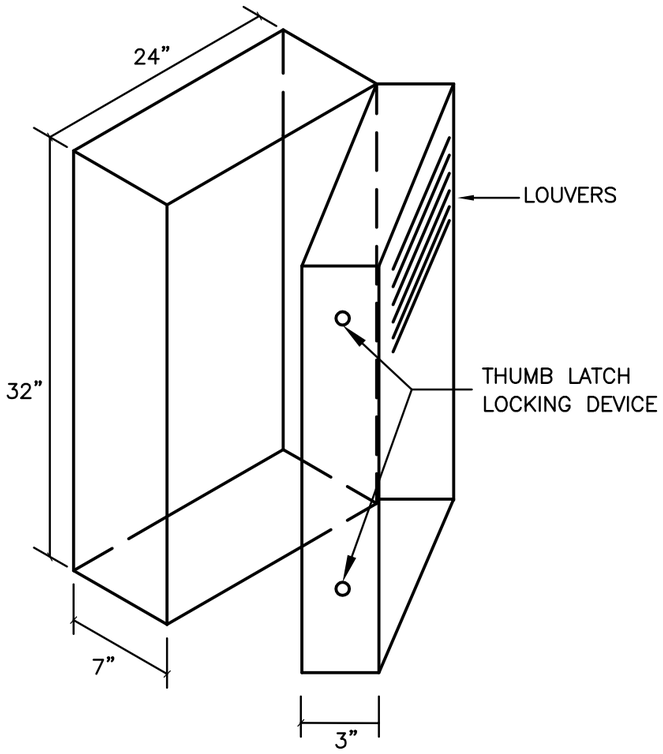

REBOX DETAIL (RE4 ONLY)

(HUBBELL RE-4 OR EQUAL)

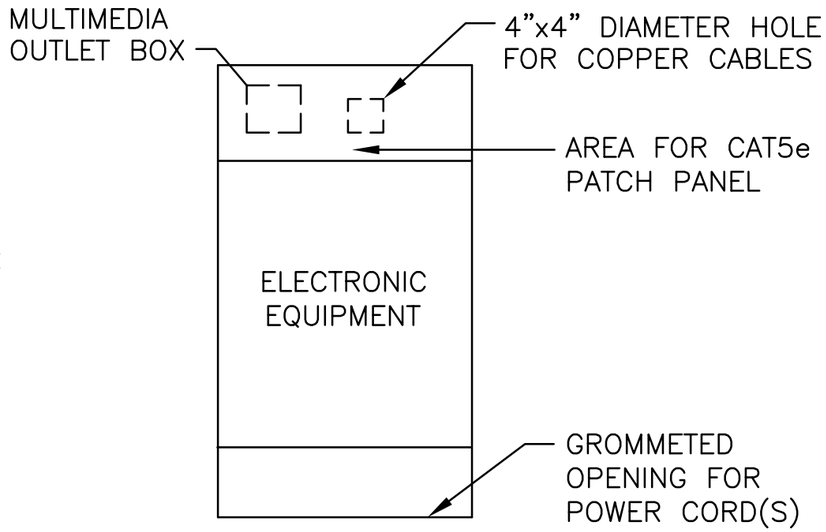

REBOX EQUIPMENT ARRANGEMENT

NOTES (REBOX – RE4 ONLY):

1. CABINET SHALL BE CONSTRUCTED FROM 16 GAUGE COLD ROLLED STEEL. HINGES SHALL BE FORMED STEEL TYPE OR EQUIVALENT AND SWING FROM SIDE. FRONT PANEL SHALL HAVE LOUVERS TO AID IN THE DISSIPATION OF HEAT. UNIT SHALL HAVE THUMB LATCH LOCKING DEVICE. UNIT SHALL HAVE A POLYESTER POWDER ENAMEL OR EQUIVALENT TYPE FINISH (GRAY IN COLOR). MOUNT CABINET WITH LOUVERS HORIZONTAL.
2. CABINET SHALL BE EQUIPPED WITH 2 SETS OF UNIVERSAL MOUNTING RAILS WITH EIA STANDARD HOLE PATTERN FOR MOUNTING UP TO FOUR (4) 19" RACK MOUNT DEVICES. CABINET SHALL PROVIDE HINGED MOUNTING FOR 19" PATCH PANEL TO ALLOW FRONT ACCESS TERMINATION. UNIT SHALL PROVIDE GROUND STUDS FOR PROPER GROUNDING OF DOOR AND BASE, AND SHALL BE CAPABLE OF RECEIVING AN OPTIONAL FAN FOR EXTRA HEAT DISSIPATION.
3. CABINET SHALL CONTAIN A MULTIMEDIA OUTLET BOX WITH SC–SC FIBER CONNECTOR ADAPTER PLATE.
4. CONTRACTOR SHALL TERMINATE FIBER WITH SC STYLE CONNECTORS.
5. CABINET SHALL BE MOUNTED TO WALL WITH FOUR (4) 1/4" BOLTS INTO WALL ANCHORS. USE TOGGLE BOLTS FOR HOLLOW WALL PARTITIONS AND LEAD ANCHORS FOR SOLID MASONRY WALLS. BOLTS SHALL PASS THROUGH THE CABINET AND INTO THE WALL ANCHOR.
6. CONTRACTOR TO SUPPLY CAT5e CABLE FROM REBOX TO DEVICES IN RACEWAY OR BOX. CABLE SHALL BE ROUTED TO CABINET AS FOLLOWS:
7. NEW CONSTRUCTION – (REBOX MUST BE FED WITH A MINIMUM OF ONE (2) – 2" DIAMETER CONDUIT. ROUGHED IN WALL TO A DOUBLE GANG OUTLET BOX) CABINET SHALL HAVE A GROMETED 4"x4" OPENING IN BACK AND BE MOUNTED DIRECTLY OVER THE OUTLET BOX IN SUCH A MANNER TO ALLOW FOR THE INSTALLATION OF THE STATION COPPER CABLES. THE FIBER CABLE MUST HAVE ONE (1) 1" DIAMETER CONDUIT FOR THE MULTIMEDIA OUTLET BOX.

WAKE COUNTY PUBLIC SCHOOL SYSTEM
111 Corning Road,Suite 190
Cary, NC 27518
(919) 588-3608

E2.06

REBOX DETAIL

SCALE: NONE

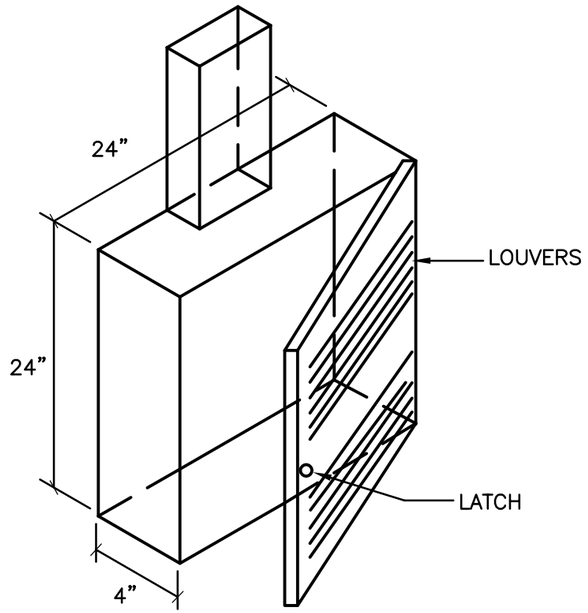

NOTES: (HUB CABINET SURFACE MOUNTED)

1. CABINET SHALL BE CONSTRUCTED FROM 16 GAUGE COLD ROLLED STEEL. HINGES SHALL BE FORMED STEEL TYPE OR EQUIVALENT AND SWING FROM SIDE. FRONT PANEL SHALL HAVE LOUVERS TO AID IN THE DISSIPATION OF HEAT. UNIT SHALL HAVE THUMB LATCH LOCKING DEVICE. UNIT SHALL HAVE A POLYESTER POWDER ENAMEL OR EQUIVALENT TYPE FINISH. MOUNT CABINET WITH LOUVERS HORIZONTAL.
2. CABINET SHALL BE MOUNTED TO WALL WITH FOUR (4) 1/4" BOLTS INTO WALL ANCHORS. USE TOGGLE BOLTS FOR HOLLOW WALL PARTITIONS AND LEAD ANCHORS FOR SOLID MASONRY WALLS. BOLTS SHALL PASS THROUGH THE 1/2" PLYWOOD CABINET BACKBOARD, THE CABINET AND INTO THE WALL ANCHOR.
3. CABINET SHALL HAVE 1/2" PLYWOOD BACKBOARD TO MOUNT EQUIPMENT. CABINET SHALL HAVE SEALED RUBBER CABLE ENTRY GROMMETS WHERE REQUIRED. OWNER TO SUPPLY AND INSTALL ELECTRONICS ONLY.
4. CABINET SHALL CONTAIN A UTS INFORMATION OUTLET WITH SC–SC FIBER CONNECTOR ADAPTER PLATE.
5. CONTRACTOR SHALL TERMINATE FIBER WITH PRE–POLISHED, CRIMP–ON, SC STYLE CONNECTORS.
6. CABINET SHALL HAVE A 12 PORT VERTICAL CAT5e PATCH PANEL.
7. CONTRACTOR SHALL PROVIDE CAT5e 24" LONG STRANDED FACTORY MANUFACTURED PATCH CORDS ONE PER CABLE TERMINATED.
8. CONTRACTOR TO SUPPLY CAT5e CABLE FROM HUB CABINET TO ALL NEW OUTLETS.
9. HUB CABINET SHALL BE FED FROM SURFACE MOUNTED METAL RACEWAY FOR EXISTING WALL RENOVATION CONSTRUCTION.

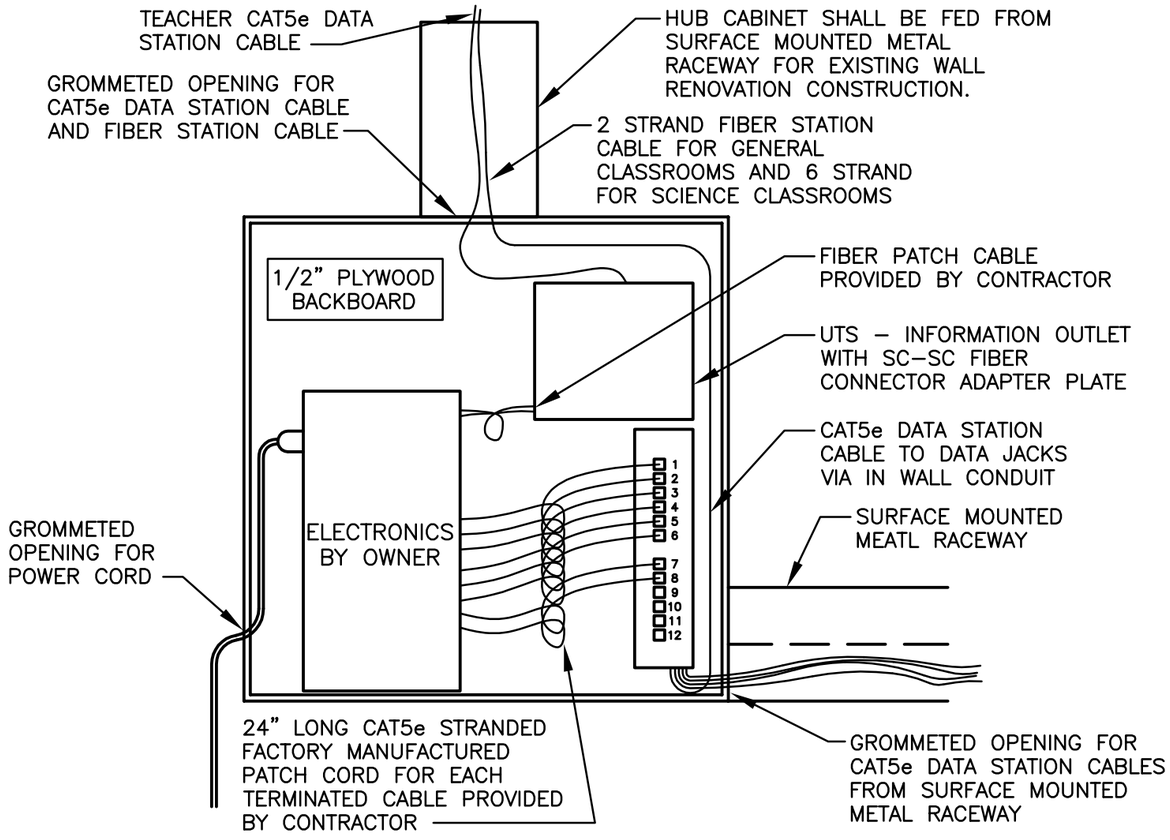

NOTES:

1. CABINET SHALL HAVE 1/2" PLYWOOD BACKBOARD TO MOUNT EQUIPMENT.
2. CABINET SHALL CONTAIN A UTS INFORMATION OUTLET WITH SC–SC FIBER CONNECTOR ADAPTER PLATE.
3. CONTRACTOR SHALL TERMINATE FIBER WITH PRE–POLISHED, CRIMP–PM, SC STYLE CONNECTORS.
4. CABINET SHALL HAVE A 12 PORT VERTICAL CAT5e PATCH PANEL AND A VERTICAL PATCH CORD MANAGER.
5. CONTRACTOR SHALL PROVIDE CAT5e 24" LONG STRANDED FACTORY MANUFACTURED PATCH CORDS FOR EACH TERMINATED CABLE.
6. CONTRACTOR TO SUPPLY CAT5e CABLE FROM HUB CABINET TO ALL NEW DEVICES.
7. NEW WALL – HOLLOW WALL: CABINET SHALL HAVE A SINGLE OPENING TO ACCOMODATE THE COPPER AND FIBER CONDUITS MOUNTED DIRECTLY IN THE WALL AS STATED IN ATTACHMENT 16740–2B.

E2.07

SWITCH ENCLOSURE DETAIL

SCALE: NONE

WAKE COUNTY PUBLIC SCHOOL SYSTEM
111 Corning Road,Suite 190
Cary, NC 27518
(919) 588-3608

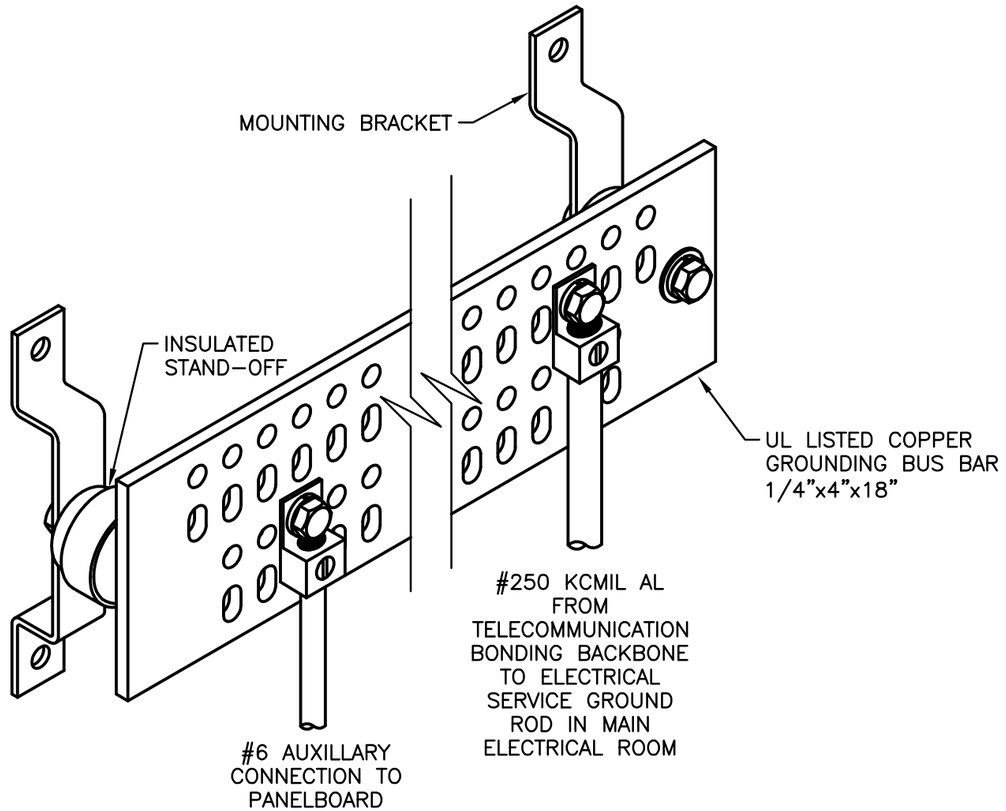

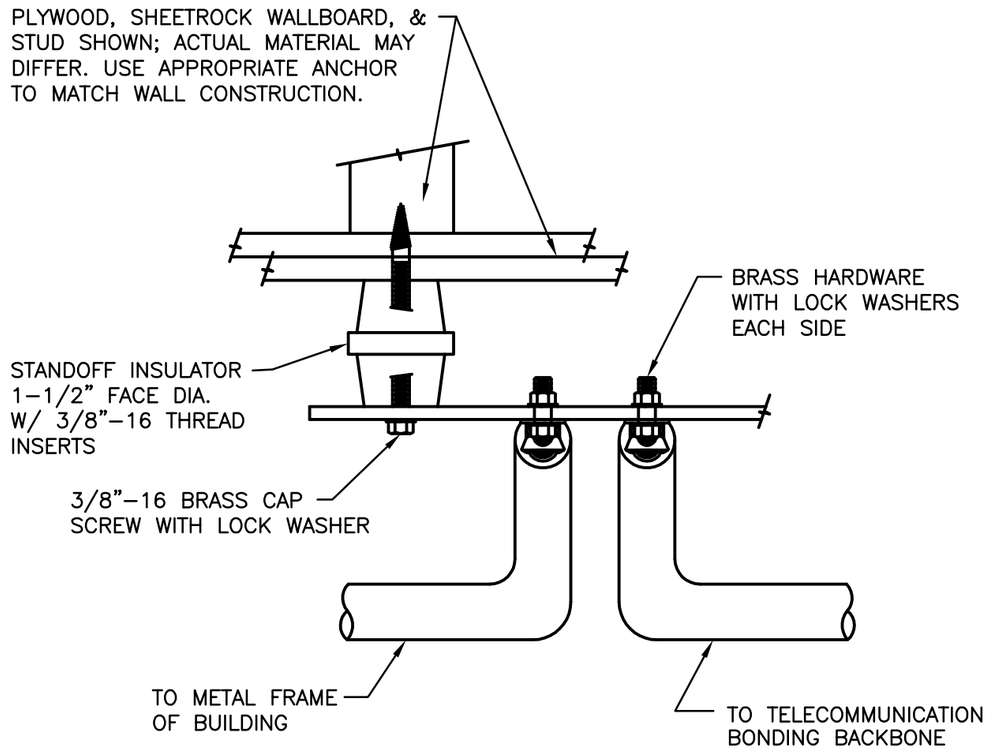

E2.08

TELECOMMUNICATIONS GROUNDING BUSSBAR DETAIL

SCALE: NONE

WAKE COUNTY PUBLIC SCHOOL SYSTEM
111 Corning Road,Suite 190
Cary, NC 27518
(919) 588-3608