TOWN OF HOPKINTON, MASSACHUSETTS

HOPKINTON ADAPTIVE PLAYGROUND

CONSTRUCTION DOCUMENTS

129 HAYDEN ROWE ST, HOPKINTON, MA 01748

NOVEMBER 11, 2025

ALL WORK SHALL COMPLY WITH THE AMERICANS DISABILITIES ACT OF 1990 (ADA), MASS. ARCHITECTURAL ACCESS BOARD - 521 CMR, AND SECTION 504 OF THE REHABILITATION ACT OF 1973, SPECIFICALLY THE ADA STANDARDS FOR ACCESSIBLE DESIGN, LATEST EDITION, WITH ALL REVISIONS, AT A MINIMUM AND THE PUBLIC RIGHT-OF-WAY ACCESSIBILITY GUIDELINES (PROWAG) WHERE POSSIBLE.

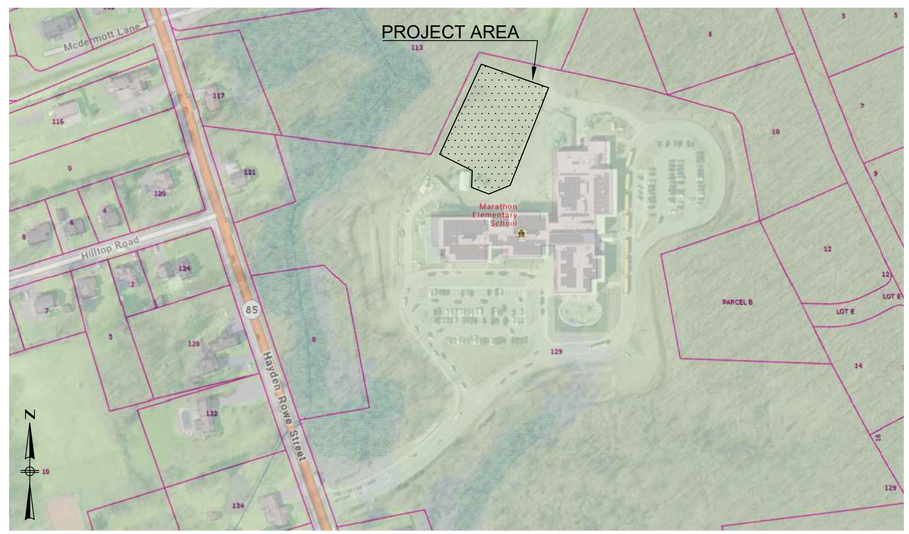

PROJECT LOCATION

LOCATION MAP

NTS

PLAN INDEX

SHEET NAME	NO.
COVER SHEET	1
GENERAL NOTES	2
EXISTING CONDITIONS PLAN	3
SITE PREPARATION PLAN	4
SITE PLAN	5
LAYOUT PLAN	6
GRADING PLAN	7
PLAYGROUND LAYOUT PLAN	8
SITE SECTION	9
DETAILS- SITE PREPARATION	10
DETAILS - SITE WORK	11
DETAILS - SITE WORK AND PLANTING	12
DETAILS - SHADE STRUCTURE	13

PREPARED BY:

BETA

www.BETA-Inc.com

SITE PREPARATION & DEMOLITION NOTES:

1. ALL ITEMS DESIGNATED TO BE REMOVED AND DISPOSED (R&D) SHALL BE TAKEN FROM THE SITE AND LEGALLY DISPOSED.

2. ALL ITEMS DESIGNATED TO BE REMOVED AND STOCKPILED (R&S) SHALL BE DISASSEMBLED AND STOCKPILED AT A LOCATION DETERMINED BY THE OWNER'S REPRESENTATIVE.

3. DEBRIS OF ANY NATURE SHALL NOT BE ALLOWED TO ACCUMULATE IN THE STREETS, PARKING LOT, SIDEWALK AREAS OR GROUNDS SURROUNDING THE PROJECT AREA.

4. FOR ALL HOLES, PITS OR OTHER HAZARDOUS DEPRESSIONS ADJACENT TO OR WITHIN EIGHT (8) FEET OF ANY SIDEWALK AREA AND ARE UNPROTECTED, A TEMPORARY GUARD FENCE SHALL BE IMMEDIATELY ERECTED FOR THE PROTECTION OF PEDESTRIANS. THE FENCING MATERIAL SHALL BE FREE FROM NAILS, FASTENINGS OR SPLINTERS AND SHALL PRESENT A REASONABLY SMOOTH SURFACE ON THE SIDES OF POSSIBLE CONTACT. SUCH TEMPORARY FENCES SHALL BE LEFT IN PLACE AND SHALL BE PROPERLY MAINTAINED UNTIL THE HOLES, PITS OR DEPRESSIONS HAVE BEEN PROPERLY FILLED.

5. ALL STUMPS AND ROOTS OF TREE AND SHRUBS INDICATED TO BE REMOVED AND DISPOSED SHALL BE LEGALLY DISPOSED OF OFF SITE. IN SPECIFIC LOCATIONS, STUMPS MAY BE GROUND IN PLACE, AS SHOWN.

6. ALL EXISTING VEGETATION (TREES, SHRUBS, GRASSES, ETC.) TO REMAIN SHALL BE PROTECTED FROM INJURY. INDIVIDUAL TREES AND SHRUBS TO BE SAVED WITHIN THE DESIGNATED WORK AREA SHALL BE PROTECTED AS SPECIFIED HEREIN. THE CONTRACTOR SHALL REMOVE ALL PROTECTIVE BARRIERS ONLY AS DIRECTED BY THE OWNER'S REPRESENTATIVE.

7. THE CONTRACTOR SHALL STRIP AND STOCKPILE EXISTING LOAM FROM THOSE AREAS WHICH ARE TO BE EXCAVATED OR FILLED. STOCKPILED LOAM SHALL NOT BE MIXED WITH ANY SUBSOIL OR OTHER UNSUITABLE MATERIAL UNLESS DIRECTED BY THE OWNER'S REPRESENTATIVE. ALL STOCKPILED LOAM REMAINS THE PROPERTY OF THE OWNER.

8. ALL STOCKPILED LOAM OR OTHER SOIL MATERIAL SHALL BE SURROUNDED BY EROSION CONTROL DEVICES.

9. THE CONTRACTOR IS RESPONSIBLE FOR KEEPING THE SITE CLEAN OF MISCELLANEOUS DEBRIS THROUGHOUT THE CONSTRUCTION PERIOD. ALL WASTE MATERIALS SHALL BE DISPOSED OF IMMEDIATELY TO A LEGAL, OFF-SITE LOCATION UNLESS OTHERWISE INDICATED ON THE PLAN.

10. DURING THE DEMOLITION PROCESS THE CONTRACTOR SHALL USE SUFFICIENT WATER OR NON-SALVABLE MATERIALS TO PREVENT EXCESSIVE SPREADING OF DUST DURING OPERATIONS.

11. THE REMOVAL AND DISPOSAL OF ALL MATERIALS SHALL BE DONE IN ACCORDANCE WITH THE APPROPRIATE STATE AND TOWN ORDINANCES, RULES AND REGULATIONS.

12. UNVEGETATED SLOPES SHALL NOT BE UNATTENDED OR EXPOSED FOR PERIODS IN EXCESS OF TWO (2) WEEKS OR THROUGH THE INACTIVE WINTER SEASON.

13. PRUNING STANDARDS:

13.A. PRUNE TREE ACCORDING TO ANSI A300.

13.B. EXPERIENCED WORKMEN UNDER THE IMMEDIATE SUPERVISION OF A LICENSED ARBORIST SHALL PERFORM ALL TREE TRIMMING.

13.C. CLIMBING IRONS OR OTHER EQUIPMENT INJURIOUS TO TREES SHALL NOT BE PERMITTED.

13.D. CUT BRANCHES WITH SHARP PRUNING INSTRUMENTS; DO NOT BREAK OR CHOP.

13.E. PRUNE TREES TO REMAIN THAT ARE AFFECTED BY TEMPORARY AND PERMANENT CONSTRUCTION.

13.F. ALL DOWNED AND CUT PLANT MATERIAL TOGETHER WITH MISCELLANEOUS DEBRIS FROM THIS WORK SHALL BE REMOVED BY THE CONTRACTOR FROM THE PROJECT ON A DAILY BASIS. MATERIALS FROM THE WORK WILL NOT BE PERMITTED TO REMAIN ON SITE RESULTING IN DELAYING OR IMPEDING OTHER WORK ON PROJECT SITE.

13.G. NO MATERIAL OR DEBRIS SHALL BE DUMPED WITHIN THE LIMITS OF THE SITE OR ABUTTING PROPERTY.

14. EXCAVATE EXISTING MULCH MATERIALTO A MIN. DEPTH OF 12" AND UP TO 18" TO REMOVE ALL ORGANICS (OLDER MULCH) FROM THE SUB BASE.

CONSTRUCTION NOTES:

1. THE CONTRACTOR SHALL NOTIFY ALL APPROPRIATE AGENCIES AND UTILITY COMPANIES IN WRITING 48 HOURS PRIOR TO ANY CONSTRUCTION WITHIN 15 FEET OF A UTILITY LINE.

2. THE CONTRACTOR SHALL COMPLY WITH ALL APPLICABLE FEDERAL, STATE AND LOCAL SAFETY CODES, REGULATIONS, LEGAL REQUIREMENTS, PERMIT CONDITIONS, ETS.

3. THE CONTRACTOR SHALL TAKE ADEQUATE PRECAUTIONS TO PROTECT ALL WALKS, STREETS, PAVEMENTS, HIGHWAY GUARDS, CURBING, EDGING, TREES AND PLANTINGS ON OR OF THE PREMISES, AND SHALL REPAIR AND REPLACE OR OTHERWISE MAKE GOOD AT HIS/HER OWN EXPENSE AS DIRECTED BY THE ENGINEER ANY ITEMS DAMAGED AS A RESULT OF THE CONTRACTOR'S WORK.

4. THE CONTRACTOR SHALL PROVIDE ADEQUATE BRACING AND SHORING OF ALL EXCAVATIONS IN ACCORDANCE WITH THE REQUIREMENTS OF GOVERNING CODES AND REGULATIONS.

5. ALL SURFACES OUTSIDE THE LIMIT OF WORK THAT ARE DISTURBED SHALL BE RESTORED TO THEIR ORIGINAL CONDITION, AS DETAILED, OR AS SPECIFIED BY THE ENGINEER.

6. ALL EXISTING PIPING AND STRUCTURES EXPOSED DURING EXCAVATION SHALL BE ADEQUATELY SUPPORTED, BRACED, OR OTHERWISE PROTECTED DURING CONSTRUCTION ACTIVITIES.

7. WHERE NEW PAVEMENT MEETS EXISTING PAVEMENT (INCLUDING DRIVEWAYS), SAW CUT EXISTING PAVEMENT SMOOTH AND STRAIGHT. WHERE NEW BITUMINOUS CONCRETE MEETS EXISTING BITUMINOUS CONCRETE SURFACES, SAW CUT EDGES ARE TO BE SEALED WITH BITUMEN AND BACK SANDED.

8. WORK WITHIN PUBLIC WAYS SHALL COMPLY WITH APPLICABLE MUNICIPAL AND STATE REQUIREMENTS.

9. IF ANY EXISTING STRUCTURES TO REMAIN ARE DAMAGED DURING CONSTRUCTION IT SHALL BE THE CONTRACTOR'S RESPONSIBILITY TO REPAIR AND/OR REPLACE THE EXISTING STRUCTURE AS NECESSARY TO RETURN IT TO EXISTING CONDITIONS OR BETTER.

LANDSCAPE NOTES:

1. THE OWNER'S REPRESENTATIVE MUST BE ON SITE TO APPROVE ALL TRIMMING AND CLEARING NECESSARY TO COMPLETE THE WORK AS SHOWN ON THE PLANS.

2. ANY TOPSOIL USED AS PLANTABLE SOIL SHALL HAVE A SANDY LOAM TEXTURE AND RELATIVELY FREE OF SUBSOIL MATERIAL, STONES, ROOTS, LUMPS OF SOIL, TREE LIMBS, TRASH OR CONSTRUCTION DEBRIS REFER TO SPECIFICATIONS.

GRADING NOTES:

1. CONTRACTOR SHALL VERIFY ALL EXISTING GRADES IN THE FIELD AND SHALL REPORT ANY DISCREPANCIES BETWEEN EXISTING AND PROPOSED CONDITION TO THE LANDSCAPE ARCHITECT.
2. ANY AREA OUTSIDE THE LIMIT OF WORK THAT IS DISTURBED SHALL BE RESTORED TO ITS ORIGINAL CONDITION AT NO COST TO THE OWNER.
3. COMPACT SUBGRADE PRIOR TO ANY FINISH GRADING. REMOVE ALL SOFT SPOTS OBSERVED OR IDENTIFIED IN FIELD.
4. PITCH EVENLY BETWEEN SPOT GRADES. ALL PAVED AREAS MUST PITCH TO DRAIN AT A MINIMUM SLOPE OF ONE-EIGHTH INCH (1/8") PER FOOT. ANY DISCREPANCIES NOT ALLOWING THIS TO OCCUR SHALL BE REPORTED TO THE LANDSCAPE ARCHITECT PRIOR TO CONTINUING WORK.
5. CONTRACTOR SHALL BLEND NEW EARTHWORK SMOOTHLY INTO EXISTING, PROVIDING VERTICAL CURVES OR ROUNDINGS AT ALL TOP AND BOTTOM OF SLOPES.
6. EXCAVATION REQUIRED WITHIN DRIP LINE OF TREES DESIGNATED TO REMAIN SHALL BE DONE BY HAND. PLANT MATERIALS DAMAGED BY CONTRACTOR SHALL BE REPLACED IN ACCORDANCE WITH THE SPECIFICATIONS.
7. AT ALL LOCATIONS WHERE EXISTING PAVEMENT ABUTS NEW CONSTRUCTION, THE EDGE OF THE EXISTING PAVEMENT SHALL BE SAWCUT TO A CLEAN, SMOOTH EDGE. WHERE NEW PAVING MEETS EXISTING PAVING, MEET LINE AND GRADE OF EXISTING WITH NEW.
8. MAXIMUM CROSS PITCH OF ALL SIDEWALKS IS 2%. ANY DISCREPANCIES NOT ALLOWING THIS TO OCCUR SHALL BE REPORTED TO THE LANDSCAPE ARCHITECT.
9. ALL GRADING SHALL COMPLY WITH THE RULES AND REGULATIONS OF THE OFFICIAL MANUAL OF THE MASSACHUSETTS ARCHITECTURAL ACCESS BOARD AND THE AMERICANS WITH DISABILITIES ACT STANDARDS FOR BUILDINGS AND FACILITIES, LATEST EDITION. IN CASE OF CONFLICT BETWEEN REGULATIONS, THE GUIDELINE PROVIDING GREATER ACCESS SHALL APPLY.
10. UTILITIES SHOWN ON THIS PLAN FOR REFERENCE ONLY. CONTRACTOR SHALL COORDINATE LOCATION OF ALL UTILITIES (LINES, DUCTS, CONDUITS, SLEEVES, FOOTINGS, ETC.) WITH LOCATIONS OF PROPOSED SITE ELEMENTS.
11. EXCAVATION REQUIRED WITHIN PROXIMITY OF UTILITY LINES SHALL BE DONE BY HAND. ANY DAMAGE AND INCURRED COSTS DUE TO FAILURE OF THE CONTRACTOR TO CONTACT THE PROPER AUTHORITIES SHALL BE BORNE BY THE CONTRACTOR.
12. CONTRACTOR SHALL MAINTAIN OR ADJUST TO PROPOSED FINISH GRADE AS NECESSARY ALL UTILITY AND SITE STRUCTURES SUCH AS LIGHT POLES, SIGNPOSTS, MANHOLES, CATCH BASINS, HAND HOLES, WATER AND GAS GATES, HYDRANTS, ETC., FROM MAINTAINED UTILITY AND SITE SYSTEMS UNLESS OTHERWISE NOTED ON UTILITY DRAWINGS OR AS DIRECTED BY LANDSCAPE ARCHITECT.
13. MAINTAIN THE INTEGRITY OF THE EXISTING DRAINAGE SYSTEM AT ALL TIMES, UNLESS OTHERWISE NOTED ON DRAWINGS.
14. LIMIT OF WORK LINE IS NOTED ON DRAWINGS. CONTRACTOR IS RESPONSIBLE FOR ALL DAMAGE DUE TO OPERATIONS INSIDE AND OUTSIDE OF THE CONTRACT LIMIT LINE. ANY AREAS OUTSIDE THE LIMIT OF WORK THAT ARE DISTURBED SHALL BE RESTORED TO ITS ORIGINAL CONDITION AT NO ADDITIONAL COST TO THE OWNER. CONTRACTOR SHALL MEET LINE AND GRADE OF EXISTING CONDITIONS AT LIMIT OF WORK LINE.
15. EROSION CONTROL BLANKETS SHALL BE USED ON NEWLY GRADED SLOPES THAT ARE EQUAL TO OR STEEPER THAN A 3:1 SLOPE.

SOIL EROSION AND SEDIMENTATION CONTROL NOTES:

1. ALL REFERENCED SOIL EROSION AND SEDIMENTATION CONTROLS INCLUDING MATERIALS USE, APPLICATION RATES, AND THE INSTALLATION PROCEDURES SHALL BE PERFORMED IN ACCORDANCE WITH THE MASSACHUSETTS DEP SPECIFICATIONS.

2. IT SHALL BE THE RESPONSIBILITY OF THE CONTRACTOR TO MAINTAIN ALL SOIL EROSION AND SEDIMENT CONTROLS ON THE PROJECT FOR THE ENTIRE DURATION OF THE CONSTRUCTION PERIOD. THE CONTRACTOR SHALL FOLLOW THE DIRECTION OF THE OWNER'S REPRESENTATIVE WITH REGARD TO INSTALLATION, MAINTENANCE, AND REPAIR OF ALL SOIL EROSION AND SEDIMENTATION CONTROLS ON THE PROJECT SITE. TEMPORARY SOIL EROSION AND SEDIMENTATION CONTROLS (HAY BALES, SILT FENCE, ETC.) SHALL BE MAINTAINED UNTIL ALL EXPOSED SOILS ARE SATISFACTORILY STABILIZED.

3. THE EROSION CONTROL BARRIER LINE ILLUSTRATED ON THESE PLANS, IS TO BE STAKED IN THE FIELD PRIOR TO CONSTRUCTION AND SHALL SERVE AS THE STRICT LIMIT OF DISTURBANCE FOR THE PROJECT. NO ALTERATIONS, INCLUDING VEGETATIVE CLEARING OR SURFACE DISTURBANCE, SHALL OCCUR BEYOND THE EROSION CONTROL BARRIER.

4. SOIL EROSION AND SEDIMENTATION CONTROL MEASURES SHALL BE INSPECTED AT LEAST ONCE EVERY SEVEN (7) CALENDAR DAYS AND WITHIN TWENTY-FOUR (24) HOURS AFTER AN EVENT WHICH GENERATES .25 INCHES OF RAIN IN A TWENTY-FOUR (24) HOUR PERIOD. MAINTENANCE SHALL INCLUDE CLEAN OUT OF ACCUMULATED SEDIMENT BEHIND THE BALES IF ½ THE ORIGINAL HEIGHT OF THE BALES / FENCE BARRIER BECOMES FILLED WITH SEDIMENT. ANY SEDIMENT DEPOSITS REMAINING IN PLACE AFTER THE SILT FENCE HAS BEEN REMOVED SHOULD BE ADDRESSED TO CONFORM TO THE EXISTING GRADE, PREPARED, AND SEEDED.

5. THE TOE OF ANY FILL SLOPE IS TO REMAIN AT LEAST ONE (1) FOOT INSIDE OF ALL EROSION CONTROLS. UNDER NO CIRCUMSTANCE SHALL THE CONTRACTOR COVER ANY PORTION OF THE EROSION CONTROLS WITH FILL MATERIAL. ANY FILL MATERIAL WHICH IS PLACED ON ANY EROSION CONTROLS BY THE CONTRACTOR, SHALL BE IMMEDIATELY REMOVED BY THE CONTRACTOR, AND ANY NECESSARY REPAIRS TO THE EROSION CONTROLS ACCOMPLISHED, AT NO COST TO THE OWNER.

6. THE CONTRACTOR SHALL INSTALL ALL EROSION CONTROL DEVICES FOR OUTLET PROTECTION PRIOR TO CLEANING AND FLUSHING STORM WATER DRAINAGE. EROSION CONTROL DEVICES SHALL REMAIN IN PLACE UNTIL ALL FLUSHED SEDIMENTS ARE REMOVED. AT ALL OUTFALL LOCATIONS WHERE PIPES ARE TO BE CLEANED AND FLUSHED, OUTLET PROTECTION SHALL BE INSTALLED TO TRAP SEDIMENTS. THESE SEDIMENTS SHALL THEN BE REMOVED AND DISPOSED OF LEGALLY BEFORE THE OUTLET PROTECTION DEVICES ARE REMOVED. IF OUTLET PROTECTION AT THE OUTFALL IS NOT FEASIBLE, THEN THE OUTLET PIPE OF THE LAST DRAINAGE STRUCTURE TO BE CLEANED SHALL BE PLUGGED TO CAPTURE ALL MATERIALS FLUSHED FROM PIPES. AFTER THE MATERIALS ARE REMOVED FROM THE DRAINAGE STRUCTURES, THE OUTLET SHALL BE UNPLUGGED TO RESUME NORMAL FUNCTIONING.

GENERAL NOTES:

1. CONTRACTOR SHALL NOTIFY "DIG-SAFE"(1-888-344-7233) AT LEAST 72 HOURS BEFORE EXCAVATING. THE CONTRACTOR SHALL RECORD THE LOCATION OF ANY/ALL DIG-SAFE UTILITY MARKINGS ON PROJECT RECORD DOCUMENTS.

2. ALL WORK SHALL CONFORM TO THE MASSACHUSETTS STATE BUILDING CODE AND ITS APPLICABLE REFERENCED STANDARDS.

3. IT IS THE RESPONSIBILITY OF THE GENERAL CONTRACTOR TO VERIFY ALL EXISTING CONDITIONS AND DIMENSIONS AS THEY RELATE TO NEW CONSTRUCTION. REPORT TO THE OWNER'S REPRESENTATIVE ALL OBSERVATIONS AND ANY DISCREPANCIES BEFORE PROCEEDING WITH WORK.

4. WORK WITHIN THE LOCAL RIGHT-OF-WAY SHALL CONFORM TO LOCAL MUNICIPAL STANDARDS. WORK WITHIN THE STATE RIGHT-OF-WAY SHALL CONFORM TO THE LATEST EDITION OF THE STATE HIGHWAY DEPARTMENTS STANDARD SPECIFICATIONS FOR HIGHWAYS AND BRIDGES.

5. THE LOCATION, SIZE, AND MATERIAL OF EXISTING UTILITIES ARE SHOWN AS APPROXIMATE REPRESENTATIONS ONLY. THE OWNER OR ITS REPRESENTATIVE HAVE NOT INDEPENDENTLY VERIFIED THIS INFORMATION. THE UTILITY INFORMATION SHOWN DOES NOT GUARANTEE THE ACTUAL EXISTENCE, SERVICEABILITY, OR OTHER DATA CONCERNING THE UTILITIES THAT MAY BE PRESENT. PRIOR TO ORDERING MATERIALS AND BEGINNING CONSTRUCTION, THE CONTRACTOR SHALL VERIFY AND DETERMINE THE EXACT LOCATIONS, SIZES, AND ELEVATIONS OF THE POINTS OF CONNECTIONS TO EXISTING UTILITIES AND SHALL CONFIRM THAT THERE ARE NO INTERFERENCES WITH EXISTING UTILITIES WITHIN PROJECT LIMITS AND THE PROPOSED UTILITY ROUTES, INCLUDING ROUTES WITHIN THE PUBLIC RIGHT-OF-WAY.

6. THE CONTRACTOR SHALL TAKE EVERY PRECAUTION TO PREVENT DAMAGE TO ALL UTILITIES (BOTH ABOVE AND BELOW GRADE) WITHIN THE PROJECT AREA. DAMAGE TO ANY UTILITIES AS A RESULT OF ACTIONS BY THE CONTRACTOR SHALL BE RESTORED BY THE CONTRACTOR, AT THE CONTRACTOR'S EXPENSE, TO CONDITIONS EQUAL TO CONDITIONS PRIOR TO THE DAMAGE.

7. UPON AWARD OF CONTRACT, CONTRACTOR SHALL MAKE NECESSARY CONSTRUCTION NOTIFICATIONS AND APPLY FOR AND OBTAIN NECESSARY PERMITS, PAY FEES, AND POST BONDS ASSOCIATED WITH THE WORK INDICATED ON DRAWINGS, IN THE SPECIFICATIONS, AND IN THE CONTRACT DOCUMENTS. DO NOT CLOSE OR OBSTRUCT ROADWAYS, SIDEWALKS, AND FIRE HYDRANTS, WITHOUT APPROPRIATE PERMITS.

8. AREAS OUTSIDE THE LIMITS OF PROPOSED WORK DISTURBED BY THE CONTRACTOR'S OPERATIONS SHALL BE RESTORED BY THE CONTRACTOR TO THEIR ORIGINAL CONDITION AT THE CONTRACTOR'S EXPENSE.

9. THE CONTRACTOR SHALL PREVENT DUST, SEDIMENT, AND DEBRIS FROM EXITING THE SITE AND SHALL BE RESPONSIBLE FOR CLEAN-UP, REPAIRS, AND CORRECTIVE ACTION IF SUCH OCCURS.

10. DAMAGE RESULTING FROM CONSTRUCTION LOADS SHALL BE REPAIRED BY THE CONTRACTOR AT NO ADDITIONAL COST TO THE OWNER.

11. ANY DAMAGE TO EXISTING PAVEMENT, SIDEWALKS, FENCES, ETC. CAUSED BY THE CONTRACTOR SHALL BE REPAIRED BY THE CONTRACTOR AT NO ADDITIONAL COST TO THE OWNER.

12. HORIZONTAL INFORMATION SHOWN HEREON AND THE COORDINATES THEY ARE BASED ON ARE IN U.S. SURVEY FEET IN THE MA. STATE PLANE COORDINATE SYSTEM REFERENCED TO THE NORTH AMERICAN DATUM OF 1983 (NAD83),

13. THE VERTICAL DATUM FOR THIS PROJECT IS REFERENCED TO THE NORTH AMERICAN VERTICAL DATUM OF 1988 (NAVD88)

14. A BOUNDARY SURVEY WAS NOT PERFORMED.

15. A SUBSURFACE UTILITY INVESTIGATION WAS NOT PERFORMED.

16. LAND OUTSIDE THE PROPOSED LIMIT OF WORK SHALL NOT BE DISTURBED BY THE CONTRACTOR.

17. ALL WORK AND MATERIALS SHALL COMPLY WITH ALL TOWN OF HOPKINTON REGULATIONS AND CODES AND O.S.H.A. STANDARDS.

18. THE CONTRACTOR SHALL BE RESPONSIBLE FOR ESTABLISHING AND MAINTAINING ALL CONTROL POINTS AND BENCH MARKS NECESSARY FOR THE WORK.

19. THE CONTRACTOR IS RESPONSIBLE FOR OBTAINING AND PAYING FOR ANY PERMITS AND/OR CONNECTION FEES REQUIRED TO CARRY OUT THE WORK

20. CONTRACTOR SHALL BE RESPONSIBLE FOR ALL OF RELOCATIONS THAT CONFLICT WITH THE PROPOSED IMPROVEMENTS SHOWN ON THE DRAWINGS, INCLUDING BUT NOT LIMITED TO, ALL UTILITIES, STORM DRAINAGE, SIGNS, TRAFFIC SIGNALS & POLES, ETC. AS REQUIRED. ALL COSTS SHALL BE BORNE BY THE CONTRACTOR.

21. ALL WALKWAYS WHEELCHAIR RAMPS SHALL CONFORM TO THE REQUIREMENTS OF THE ARCHITECTURAL ACCESS BOARD (A.A.B.) AND THE AMERICANS WITH DISABILITIES ACT (A.D.A.). AND THE LATEST MASSDOT STANDARDS.

22. SAFETY CONTROLS FOR CONSTRUCTION OPERATIONS SHALL BE IN ACCORDANCE WITH MASSDOT REQUIREMENTS AND THE LATEST VERSION OF THE MUTCD.

23. CONTRACTOR SHALL COORDINATE LOCATION OF PLAYGROUND EQUIPMENT FOUNDATIONS AND URETHANE SAEFTY SURFACING WITH THE APPROPRIATE SUPPLIER OR REPRESENTATIVE .

ABBREVIATIONS:

ADD.	ADDITIONAL
ALT.	ALTERNATE
BIT.	BITUMINOUS
CEM.	CEMENT
CF	CUBIC FOOT
CONC.	CONCRETE
CPP.	CORRUGATED PLASTIC PIPE
CU	COPPER
DIAM.	DIAMETER
ECB	EROSION CONTROL BARRIER
EX.	EXISTING
ELEC.	ELECTRIC
EWF.	ENGINEERED WOOD FIBER
EX./EXIST.	EXISTING
LBS	POUNDS
MAX.	MAXIMUM
MIN.	MINIMUM
O.C.	ON CENTER
PROP.	PROPOSED
PSI	POUNDS PER SQUARE INCH
PVC	POLYVINYL CHLORIDE
R&D	REMOVE AND DISPOSE
R&R	REMOVE AND RELOCATE
REF.	REFERENCE
RET.	RETAIN
REQ.	REQUIRMENTS
SF	SQUARE FOOT
SQ.	SQUARE
TYP.	TYPICAL
VEH.	VEHICULAR
W/	WITH
WCR	WHEELCHAIR RAMP

PREPARED BY

BETA
www.BETA-Inc.com

REGISTERED PROFESSIONAL

MASSACHUSETTS NATHAN SOCHA NO. 4458 REGISTERED LANDSCAPE ARCHITECT

SUBCONSULTANT

PROJECT

Hopkinton Adaptive Playground

Construction Documents

Douglas Road
Lowell, MA

TITLE

GENERAL NOTES

NO.	REVISIONS	DATE

DRAWN BY: NS, SB, MH
DESIGNED BY: NS, SB
CHECKED BY: NS, DM, SR
ISSUE DATE: 11/11/2025
BETA JOB NO.: 11439

SCALE

NONE

UNLESS OTHERWISE NOTED OR CHANGED BY REPRODUCTION

SHEET NO.

2

11/11/2025 9:34 AM G:\PLANNING\LANDSCAPE\11000S\11439 - HOPKINTON, MA - ADAPTIVE PLAYGROUND\DRAWINGFILES\PLANSET\11439 - HOPKINTON PLAYGROUND - STANDARD\PLANSET\11439 GEN NOTES.DWG (BETA STD BW.CTB)

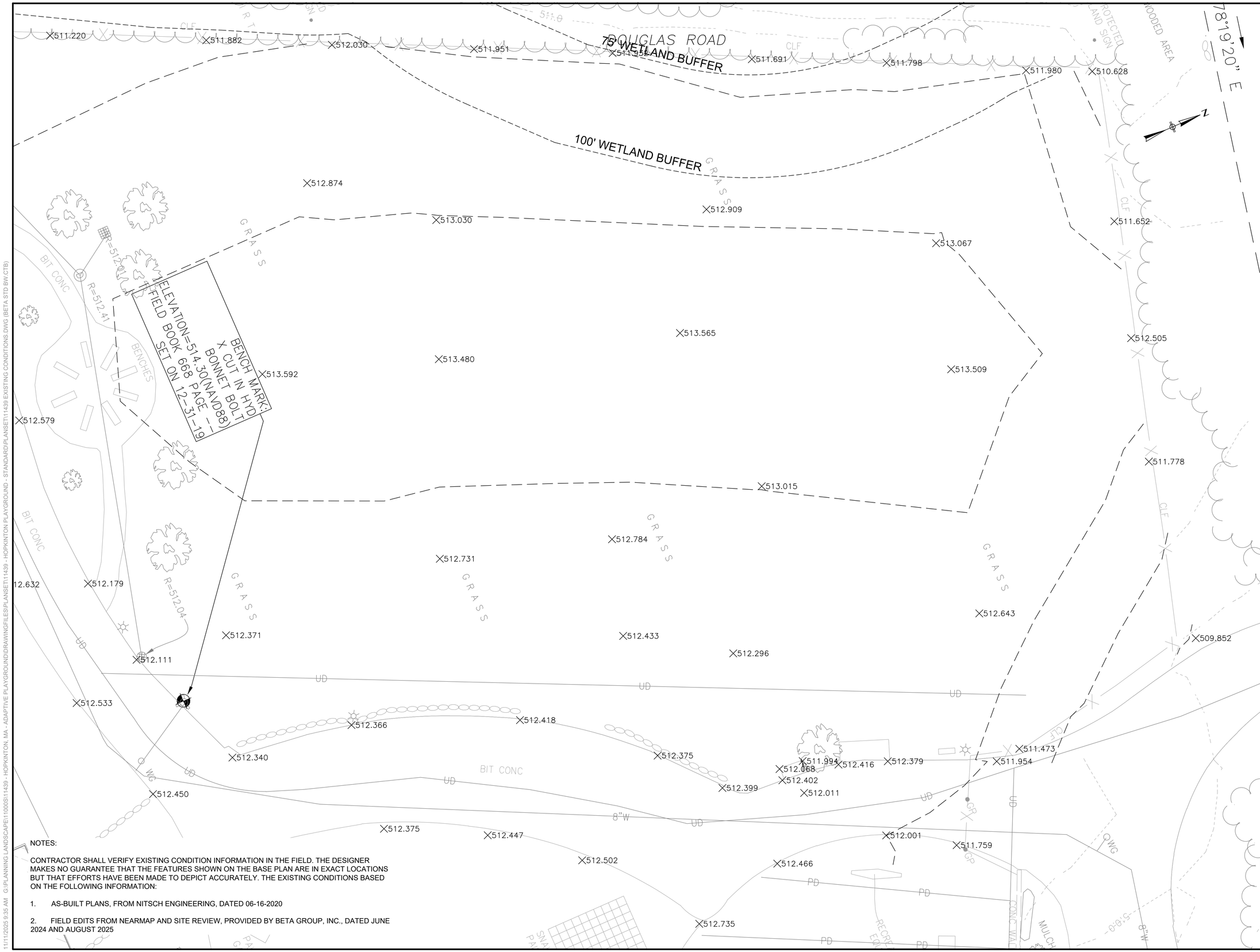

NOTES:

CONTRACTOR SHALL VERIFY EXISTING CONDITION INFORMATION IN THE FIELD. THE DESIGNER MAKES NO GUARANTEE THAT THE FEATURES SHOWN ON THE BASE PLAN ARE IN EXACT LOCATIONS BUT THAT EFFORTS HAVE BEEN MADE TO DEPICT ACCURATELY. THE EXISTING CONDITIONS BASED ON THE FOLLOWING INFORMATION:

1. AS-BUILT PLANS, FROM NITSCH ENGINEERING, DATED 06-16-2020

2. FIELD EDITS FROM NEARMAP AND SITE REVIEW, PROVIDED BY BETA GROUP, INC., DATED JUNE 2024 AND AUGUST 2025

PREPARED BY

BETA
www.BETA-Inc.com

REGISTERED PROFESSIONAL

SUBCONSULTANT

PROJECT

Hopkinton Adaptive Playground

Construction Documents

Douglas Road
Lowell, MA

TITLE

EXISTING CONDITIONS PLAN

NO.	REVISIONS	DATE

DRAWN BY:	NS, SB, MH
DESIGNED BY:	NS, SB
CHECKED BY:	NS, DM, SR
ISSUE DATE:	11/11/2025
BETA JOB NO.:	11439

SCALE

10 0 10 20
SCALE IN FEET: 1"=10'

UNLESS OTHERWISE NOTED OR CHANGED BY REPRODUCTION

SHEET NO.

3

11/11/2025 9:35 AM G:\PLANNING\LANDSCAPE\11000S\11439 - HOPKINTON, MA - ADAPTIVE PLAYGROUND\DRAWINGFILES\PLANSET\11439 - HOPKINTON PLAYGROUND - STANDARD\PLANSET\11439 EXISTING CONDITIONS.DWG (BETA STD BW.CTB)

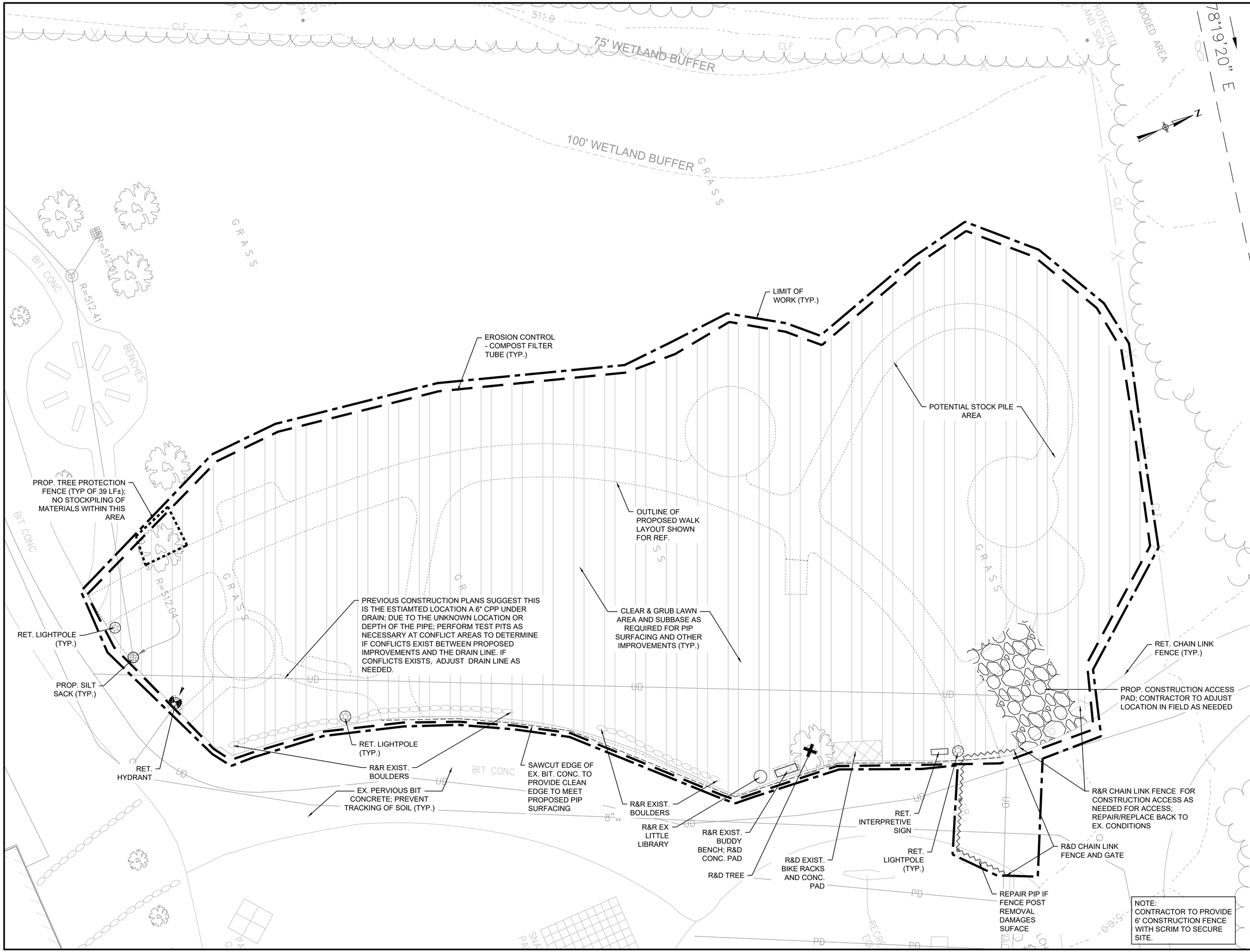

PREPARED BY

BETA
www.BETA-Inc.com

REGISTERED PROFESSIONAL

COMMONWEALTH OF MASSACHUSETTS
NATHAN SOCHA
NO. 4458
REGISTERED LANDSCAPE ARCHITECT

SUBCONSULTANT

PROJECT

Hopkinton Adaptive Playground

Construction Documents

Douglas Road
Lowell, MA

TITLE

SITE PREPARATION PLAN

NO.	REVISIONS	DATE

DRAWN BY:	NS, SB, MH
DESIGNED BY:	NS, SB
CHECKED BY:	NS, DM, SR
ISSUE DATE:	11/11/2025
BETA JOB NO.:	11439

SCALE

10 0 10 20
SCALE IN FEET: 1"=10'

UNLESS OTHERWISE NOTED OR CHANGED BY REPRODUCTION

SHEET NO.

4

11/11/2025 9:35 AM G:\PLANNING\LANDSCAPE\11000S\11439 - HOPKINTON, MA - ADAPTIVE PLAYGROUND\DRAWINGFILES\PLANSET\11439 - HOPKINTON PLAYGROUND - STANDARD\PLANSET\11439 SITE PREP.DWG (BETA STB BW.STB)

PAVEMENT NOTES

RESILIENT SAFETY SURFACING

CONTRACTOR TO COORDINATE LAYOUT, DEPTHS, AND GRADES OF RESILIENT SAFETY SURFACING WITH PLAYGROUND MANUFACTURER'S REPRESENTATIVE AND INSTALLER.

LAYOUT NOTES

1. CONTRACTOR SHALL VERIFY ALL CONDITIONS IN THE FIELD AND REPORT ANY DISCREPANCIES THAT AFFECT THE LAYOUT OF PROPOSED WORK
2. CONTRACTOR SHALL COORDINATE WITH MANUFACTURER'S REP TO VERIFY LAYOUT OF PLAY STRUCTURES, SAFETY ZONES, AND PANELS WITHIN THE NEW POURED-IN-PLACE RESILIENT SAFETY SURFACING PRIOR TO FINAL INSTALLATION.
3. CONTRACTOR MAY BE DIRECTED BY ENGINEER OR EQUIPMENT MANUFACTURER OR REPRESENTATIVE TO INCREASE THE THICKNESS OF THE SAFETY WEARING COURSE UNDER CERTAIN FEATURES AND/OR AT THE BASE OF THE SLIDE.
4. EQUIPMENT INDICATED AS INSTALL ONLY SHALL BE PROVIDED BY THE CONTRACTOR. THE CONTRACTOR SHALL BE RESPONSIBLE FOR PROTECTING AND HANDLING THE EQUIPMENT.

POURED IN PLACE SAFETY SURFACING SCHEDULE:

MED. BLUE:	2200 SF
LIGHT BLUE:	3300 SF
GREEN:	2000 SF

NOTE: QTY IS APPROX. QTY SHOWN ON PLAN SHALL DICTATE TOTAL AMOUNT; SF AMOUNT REPRESENT FLAT SURFACING. PROVIDE ADDITIONAL PIP SURFACING AS NEEDED TO SLOPE EDGES PER DETAILS.

PLANT LIST

KEY	Count	BOTANICAL	COMMON	SIZE	NOTES
GTS	1	Gleditsia triacanthos var. inermis 'Shademaster'	Shademaster Honey Locust	2-2.5" Cal.	B&B
UAP	3	Ulmus Americana 'Princeton'	Princeton American Elm	2-2.5" Cal.	B&B
ARS	3	Acer rubrum 'Somerset'	Somerset Red Maple	2-2.5" Cal.	B&B

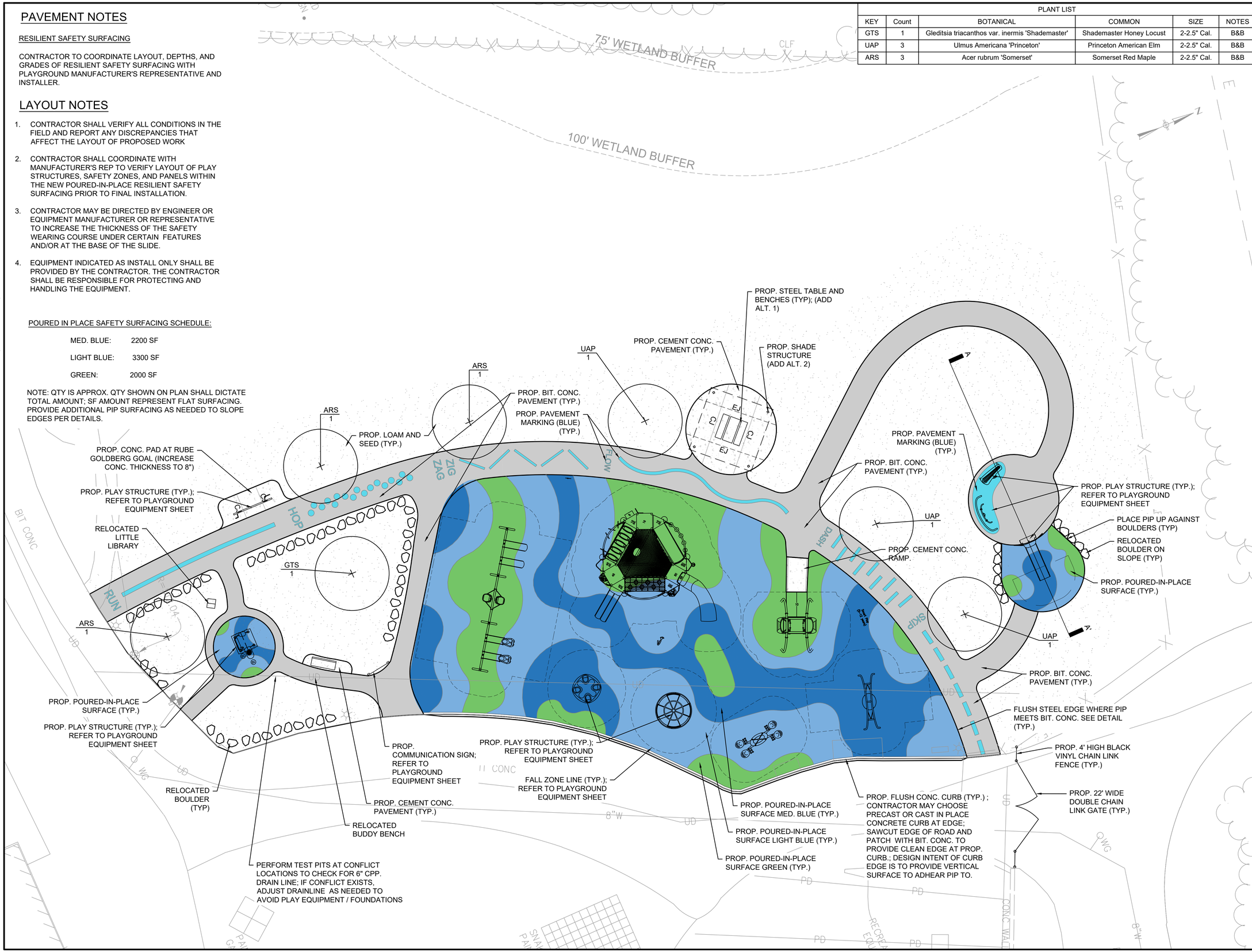

PREPARED BY

BETA
www.BETA-Inc.com

REGISTERED PROFESSIONAL

COMMONWEALTH OF MASSACHUSETTS
NATHAN SOCHA
NO. 4458
REGISTERED LANDSCAPE ARCHITECT

SUBCONSULTANT

PROJECT

Hopkinton Adaptive Playground

Construction Documents

Douglas Road
Lowell, MA

TITLE

SITE PLAN

NO.	REVISIONS	DATE

DRAWN BY:	NS, SB, MH
DESIGNED BY:	NS, SB
CHECKED BY:	NS, DM, SR
ISSUE DATE:	11/11/2025
BETA JOB NO.:	11439

SCALE

10 0 10 20
SCALE IN FEET: 1"=10'

UNLESS OTHERWISE NOTED OR CHANGED BY REPRODUCTION

SHEET NO.

5

11/11/2025 9:48 AM G:\PLANNING LANDSCAPE\11000S\11439 - HOPKINTON, MA - ADAPTIVE PLAYGROUND\DRAWINGFILES\PLANSET\11439 - HOPKINTON PLAYGROUND - STANDARD\PLANSET11439 SITE PLAN.DWG (BETA STB BW.STB)

NOTE:
AN AUTOCAD FILE WILL BE PROVIDED TO CONTRACTOR TO LAYOUT SITE IMPROVEMENTS.

PREPARED BY

BETA
www.BETA-Inc.com

REGISTERED PROFESSIONAL

COMMONWEALTH OF MASSACHUSETTS
NATHAN SOCHA
NO. 4458
REGISTERED LANDSCAPE ARCHITECT

SUBCONSULTANT

PROJECT

Hopkinton Adaptive Playground

Construction Documents

Douglas Road
Lowell, MA

TITLE

LAYOUT PLAN

NO.	REVISIONS	DATE

DRAWN BY:	NS, SB, MH
DESIGNED BY:	NS, SB
CHECKED BY:	NS, DM, SR
ISSUE DATE:	11/11/2025
BETA JOB NO.:	11439

SCALE

10 0 10 20
SCALE IN FEET: 1"=10'

UNLESS OTHERWISE NOTED OR CHANGED BY REPRODUCTION

SHEET NO.

6

11/11/2025 9:49 AM G:\PLANNING LANDSCAPE\11000S\11439 - HOPKINTON, MA - ADAPTIVE PLAYGROUND\DRAWINGFILES\PLANSET\11439 - HOPKINTON PLAYGROUND - STANDARD\PLANSET\11439 LAYOUT PLAN.DWG (BETA STD BW.CTB)

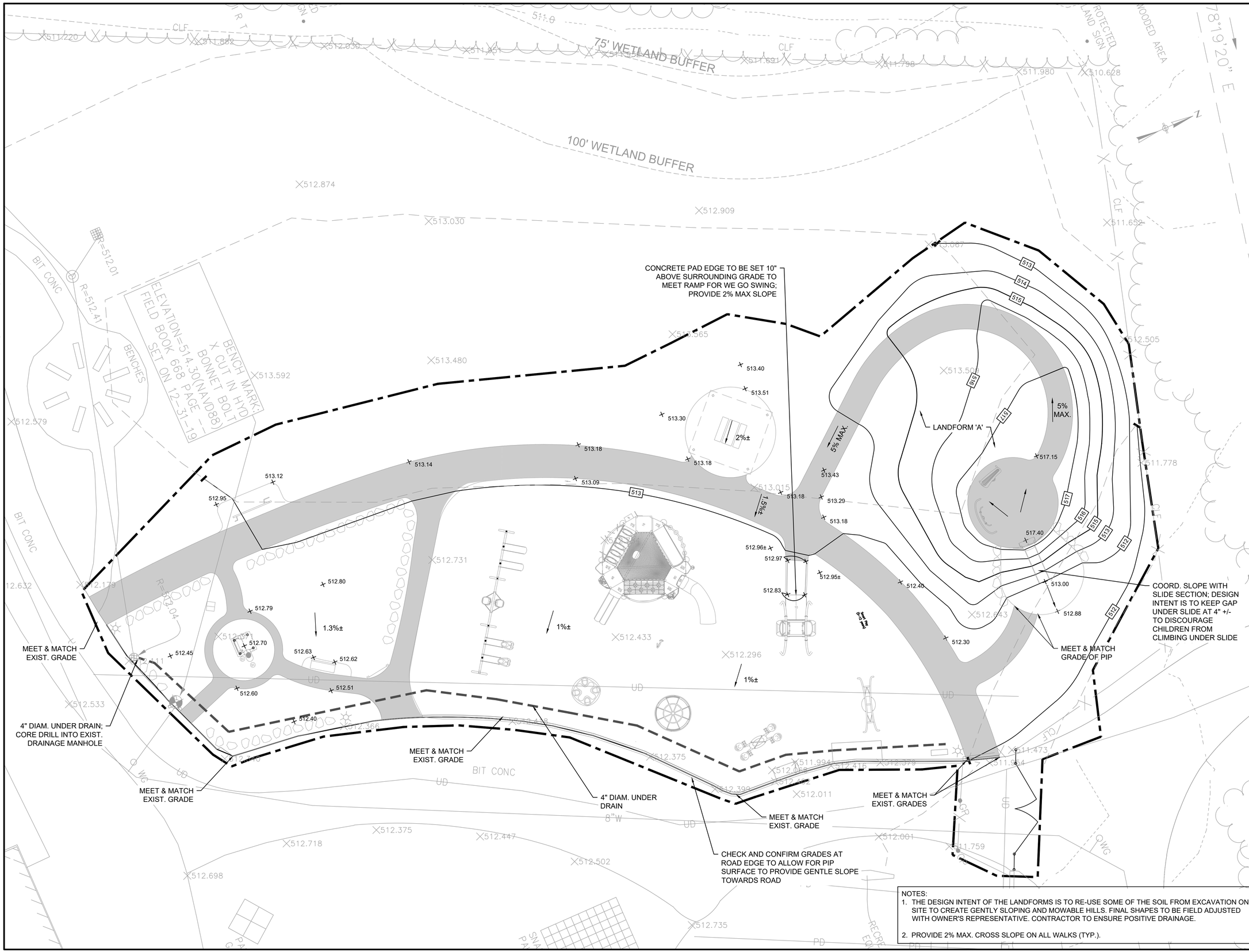

NOTES:
1. THE DESIGN INTENT OF THE LANDFORMS IS TO RE-USE SOME OF THE SOIL FROM EXCAVATION ON SITE TO CREATE GENTLY SLOPING AND MOWABLE HILLS. FINAL SHAPES TO BE FIELD ADJUSTED WITH OWNER'S REPRESENTATIVE. CONTRACTOR TO ENSURE POSITIVE DRAINAGE.
2. PROVIDE 2% MAX. CROSS SLOPE ON ALL WALKS (TYP.).

PREPARED BY

BETA
www.BETA-Inc.com

REGISTERED PROFESSIONAL

COMMONWEALTH OF MASSACHUSETTS
NATHAN SOCHA
NO. 4458
REGISTERED LANDSCAPE ARCHITECT

SUBCONSULTANT

PROJECT

Hopkinton Adaptive Playground

Construction Documents

Douglas Road
Lowell, MA

TITLE

GRADING PLAN

NO.	REVISIONS	DATE

DRAWN BY:	NS, SB, MH
DESIGNED BY:	NS, SB
CHECKED BY:	NS, DM, SR
ISSUE DATE:	11/11/2025
BETA JOB NO.:	11439

SCALE

10 0 10 20
SCALE IN FEET: 1"=10'

UNLESS OTHERWISE NOTED OR CHANGED BY REPRODUCTION

SHEET NO.

7

11/11/2025 9:50 AM G:\PLANNING LANDSCAPE\1100\S\11439 - HOPKINTON, MA - ADAPTIVE PLAYGROUND\DRAWINGFILES\PLANSET\11439 - HOPKINTON PLAYGROUND - STANDARDPLANSET\11439 GRADING PLAN.DWG (BETA STD BW.CTB)

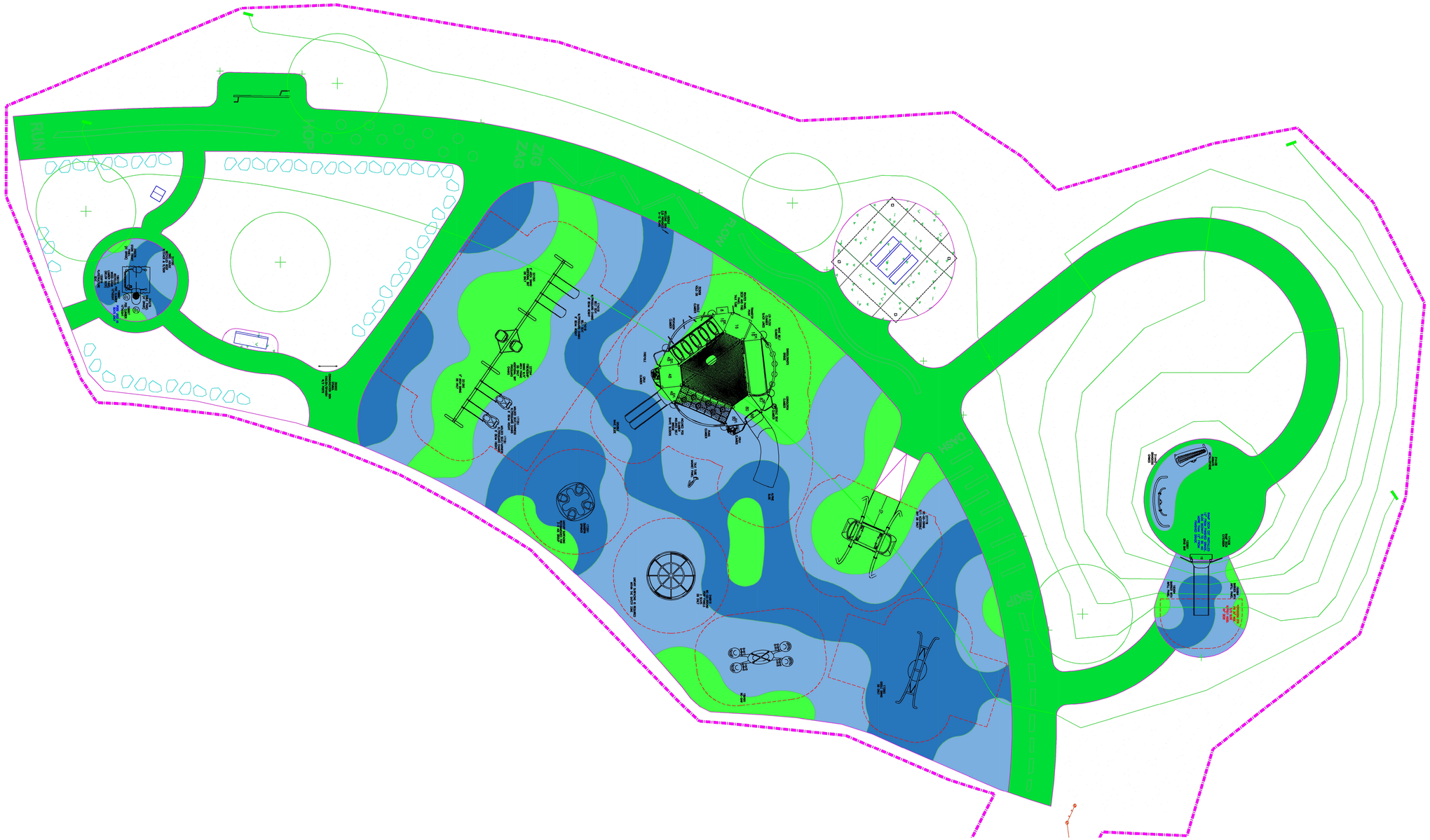

landscape structures

The play components identified on this plan are IPEMA certified. (Unless model number is preceded with *) The use and layout of these components conform to the requirements of ASTM F1487. To verify product certification, visit www.ipema.org

THIS PLAY AREA & PLAY EQUIPMENT IS DESIGNED FOR AGES 5–12 YEARS UNLESS OTHERWISE NOTED ON PLAN.

IT IS THE MANUFACTURERS OPINION THAT THIS PLAY AREA DOES CONFORM TO THE A.D.A. ACCESSIBILITY STANDARDS, ASSUMING AN ACCESSIBLE PROTECTIVE SURFACING IS PROVIDED, AS INDICATED, OR WITHIN THE ENTIRE USE ZONE.

THIS CONCEPTUAL PLAN WAS BASED ON INFORMATION AVAILABLE TO US. PRIOR TO CONSTRUCTION, DETAILED SITE INFORMATION INCLUDING SITE DIMENSIONS, TOPOGRAPHY EXISTING UTILITIES, SOIL CONDITIONS, AND DRAINAGE SOLUTIONS SHOULD BE OBTAINED, EVALUATED, & UTILIZED IN THE FINAL DESIGN. PLEASE VERIFY ALL DIMENSIONS OF PLAY AREA, SIZE, ORIENTATION, AND LOCATION OF ALL EXISTING UTILITIES, EQUIPMENT, AND SITE FURNISHINGS PRIOR TO ORDERING. SLIDES SHOULD NOT FACE THE HOT AFTERNOON SUN.

CHOOSE A PROTECTIVE SURFACING MATERIAL THAT HAS A CRITICAL HEIGHT VALUE TO MEET THE MAXIMUM FALL HEIGHT FOR THE EQUIPMENT (REF. ASTM F1487 STANDARD CONSUMER SAFETY PERFORMANCE SPECIFICATION FOR PLAYGROUND EQUIPMENT FOR PUBLIC USE, SECTION 8 CURRENT REVISION). THE SUBSURFACE MUST BE WELL DRAINED. IF THE SOIL DOES NOT DRAIN NATURALLY IT MUST BE TILED OR SLOPED 1/8" TO 1/4" PER FOOT TO A STORM SEWER OR A "FRENCH DRAIN".

AREA OF ACCESSIBLE/PROTECTIVE SURFACING (POURED-IN-PLACE SUGGESTED)

IT IS THE MANUFACTURER'S OPINION AND INTENT THAT THE LAYOUT OF THESE COMPONENTS CONFORM WITH THE U.S. CONSUMER PRODUCT SAFETY COMMISSION'S (CPSC) "HANDBOOK FOR PUBLIC PLAYGROUND SAFETY".

DESIGNED BY:
JRA

COPYRIGHT: 7.23.2025
LANDSCAPE STRUCTURES, INC.
601 7th STREET SOUTH – P.O. BOX 198
DELANO, MINNESOTA 55328
PH: 1-800-328-0035 FAX: 1-763-972-6091

Date	Previous Drawing #	Initials

TOTAL ELEVATED PLAY COMPONENTS	15		
TOTAL ELEVATED COMPONENTS ACCESSIBLE BY RAMP	0	REQUIRED	0
TOTAL ELEVATED COMPONENTS ACCESSIBLE BY TRANSFER	12	REQUIRED	8
TOTAL ACCESSIBLE GROUND LEVEL COMPONENTS SHOWN	20	REQUIRED	5
TOTAL DIFFERENT TYPES OF GROUND LEVEL COMPONENTS	9	REQUIRED	9

O'BRIEN & SONS INCORPORATED

HOPKINTON PLAYGROUND

HOPKINTON, MA

M.E. O'BRIEN & SON, INC.
MEGHAN O'BRIEN

SYSTEM TYPE:
SMART

DRAWING #:
ME025600

ISO 14001:2004 CERTIFIED

ISO 9001:2000 Certified

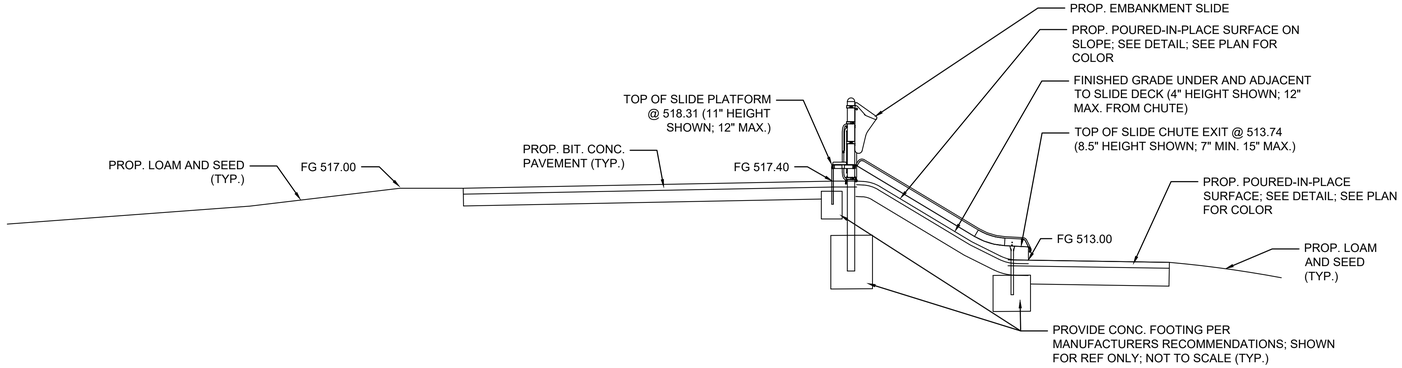

SITE SECTION A-A'

SCALE: $\frac{1}{4}$" = 1' - 0"

PREPARED BY

BETA
www.BETA-Inc.com

REGISTERED PROFESSIONAL

MASSACHUSETTS NATHAN SOCHA NO. 4458 REGISTERED LANDSCAPE ARCHITECT

SUBCONSULTANT

PROJECT

Hopkinton Adaptive Playground

Construction Documents

Douglas Road
Lowell, MA

TITLE

SITE SECTIONS

NO.	REVISIONS	DATE

DRAWN BY: NS, SB, MH
DESIGNED BY: NS, SB
CHECKED BY: NS, DM, SR
ISSUE DATE: 11/11/2025
BETA JOB NO.: 11439

SCALE

10 0 10 20
SCALE IN FEET: 1"=10'

UNLESS OTHERWISE NOTED OR CHANGED BY REPRODUCTION

SHEET NO.

11/11/2025 9:50 AM G:\PLANNING LANDSCAPE\11000S\11439 - HOPKINTON, MA - ADAPTIVE PLAYGROUND\DRAWINGFILES\PLANSET\11439 - HOPKINTON PLAYGROUND - STANDARD\PLANSET\11439 SITE PLAN.DWG (BETA STB BW.STB)

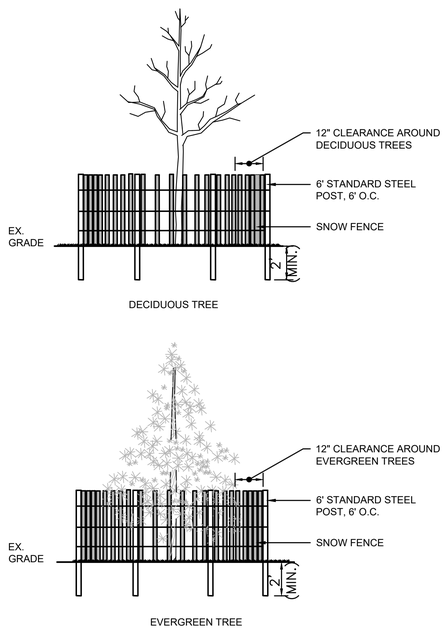

DRIPLINE TREE PROTECTION DEVICE
NOT TO SCALE

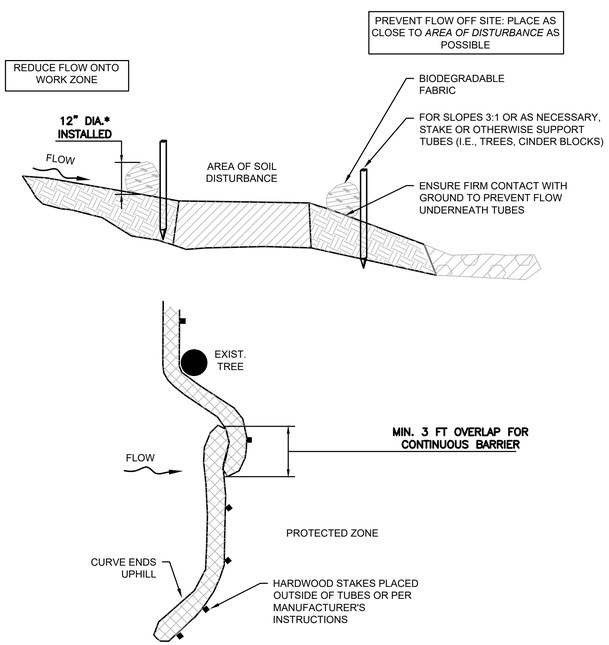

NOTES:
1. PLACE TUBE ALONG CONTOURS AND PERPENDICULAR TO FLOW.
2. ADJUST LOCATION AS REQUIRED FOR OPTIMUM EFFECTIVENESS. DO NOT INSTALL IN WATERWAYS.
3. PLACE STAKES AS NEEDED TO SECURE TUBES IN PLACE.

PLAN VIEW

EROSION CONTROL - COMPOST FILTER TUBE
NOT TO SCALE

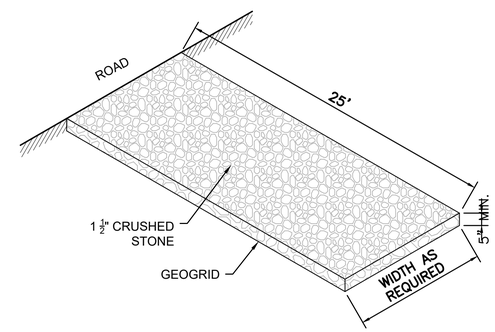

CONSTRUCTION ENTRANCE PAD
NOT TO SCALE

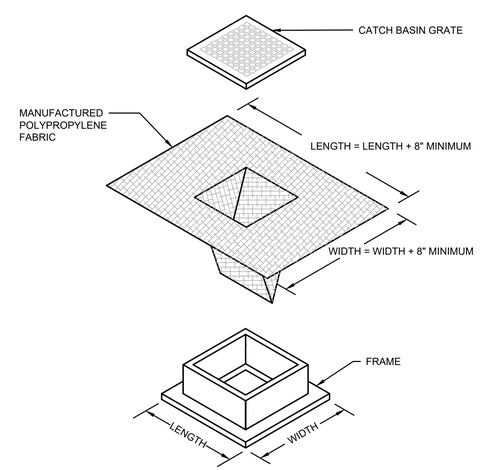

NOTES:
1. LENGTH AND WIDTH OF POLYPROPYLENE FABRIC MUST EXCEED EXISTING CATCH BASIN FRAME DIMENSIONS BY A MINIMUM OF 8".
2. REMOVE CATCH BASIN GRATE AND INSTALL POLYPROPYLENE FABRIC OVER CATCH BASIN FRAME. REPLACE CATCH BASIN GRATE TO SECURE POLYPROPYLENE FABRIC IN PLACE.

CATCH BASIN SEDIMENT CONTROL DEVICE - SILT SACK
NOT TO SCALE

PREPARED BY

BETA
www.BETA-Inc.com

REGISTERED PROFESSIONAL

SUBCONSULTANT

PROJECT

Hopkinton Adaptive Playground

Construction Documents

Douglas Road
Lowell, MA

TITLE

DETAILS- SITE PREPARATION

NO.	REVISIONS	DATE

DRAWN BY:	NS, SB, MH
DESIGNED BY:	NS, SB
CHECKED BY:	NS, DM, SR
ISSUE DATE:	11/11/2025
BETA JOB NO.:	11439

SCALE

AS SHOWN

UNLESS OTHERWISE NOTED OR CHANGED BY REPRODUCTION

SHEET NO.

10

11/11/2025 9:50 AM G:\PLANNING LANDSCAPE\11000S\11439 - HOPKINTON, MA - ADAPTIVE PLAYGROUND\DRAWINGFILES\PLANSET\11439 - HOPKINTON PLAYGROUND - STANDARD\PLANSET\11439 DETAILS PLAN.DWG (BETA STB BW.STB)

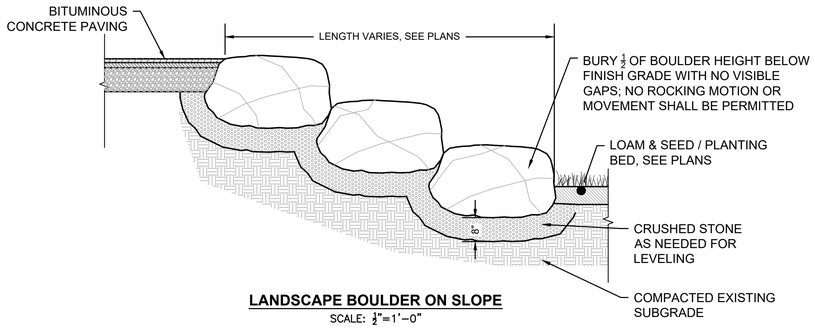

LANDSCAPE BOULDER ON SLOPE
SCALE: ½"=1'–0"

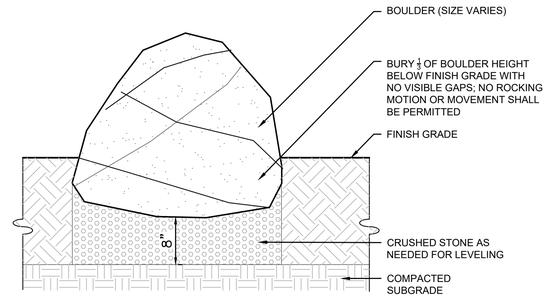

BOULDER
SCALE: 1"=1'

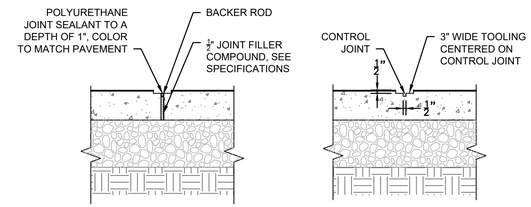

EXPANSION JOINT **CONTROL JOINT**

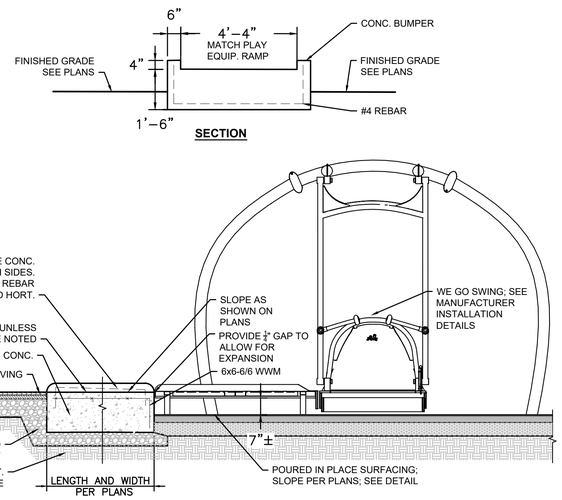

CEMENT CONCRETE RAMP
SCALE: ¼"=1'–0"

SECTION

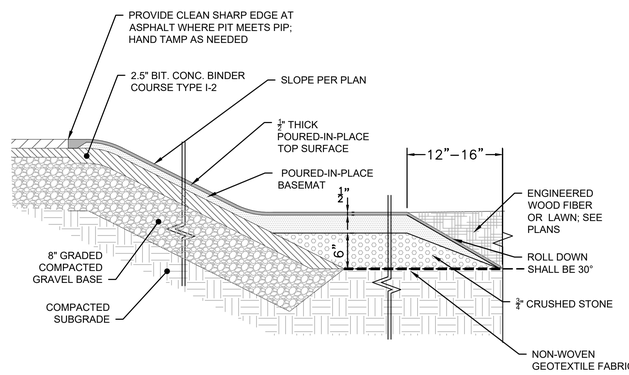

SLOPED POURED IN PLACE AT EMBANKMENT SLIDE

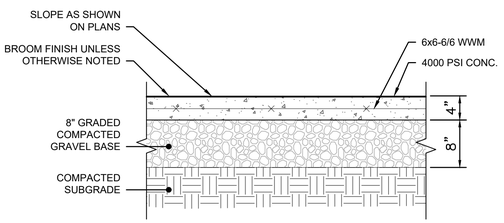

NOTES:
1. EXPANSION JOINTS SHALL BE 20' O.C. UNLESS OTHERWISE NOTED ON THE PLANS.
2. CONTROL JOINTS SHALL BE 5' O.C. UNLESS OTHERWISE NOTED ON THE PLANS.

CEMENT CONCRETE PAVING
SCALE: 1"=1'–0"

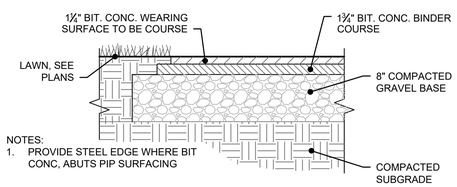

NOTES:
1. PROVIDE STEEL EDGE WHERE BIT CONC, ABUTS PIP SURFACING

BITUMINOUS CONCRETE PAVING AT WALKWAYS
SCALE: 1"=1'–0"

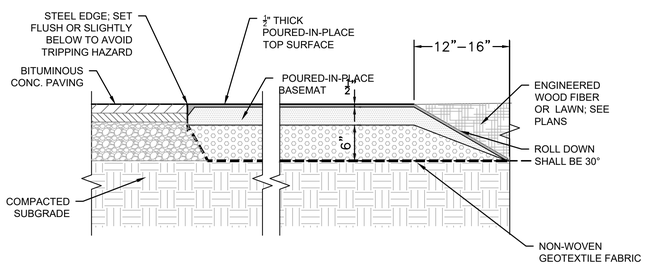

AT EDGE WITHOUT CURB / BITUMINOUS CONCRETE PAVING

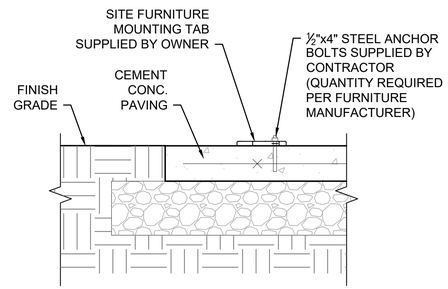

SITE FURNITURE MOUNTING
SCALE: 1½"=1'–0"

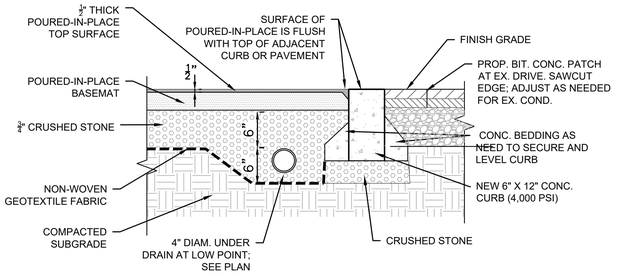

AT FLUSH CONCRETE CURB

NOTE:
1. FOR ALL POURED-IN-PLACE SURFACING, PROVIDE THE REQUIRED DEPTH NEEDED FOR THE THE FALL HEIGHT AT EACH PLAY STRUCTURE. CONFIRM FALL HEIGHTS WITH MANUFACTURER.
2. PROVIDE ADDITIONAL DEPTH OF CRUSHED STONE OR SUBBASE AS NEEDED.

POURED-IN-PLACE SURFACING
NOT TO SCALE

PREPARED BY

BETA
www.BETA-Inc.com

REGISTERED PROFESSIONAL

SUBCONSULTANT

PROJECT

Hopkinton Adaptive Playground

Construction Documents

Douglas Road
Lowell, MA

TITLE

DETAILS - SITE WORK

NO.	REVISIONS	DATE

DRAWN BY:	NS, SB, MH
DESIGNED BY:	NS, SB
CHECKED BY:	NS, DM, SR
ISSUE DATE:	11/11/2025
BETA JOB NO.:	11439

SCALE

AS SHOWN

UNLESS OTHERWISE NOTED OR CHANGED BY REPRODUCTION

SHEET NO.

11

11/11/2025 9:51 AM G:\PLANNING LANDSCAPE\11000S\11439 - HOPKINTON, MA - ADAPTIVE PLAYGROUND\DRAWINGFILES\PLANSET\11439 - HOPKINTON PLAYGROUND - STANDARD\PLANSET\11439 DETAILS PLAN.DWG (BETA STB BW.STB)

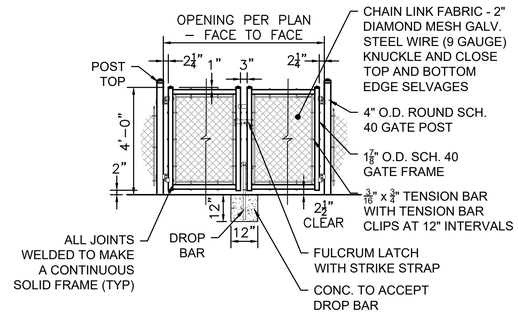

DOUBLE GATE ELEVATION

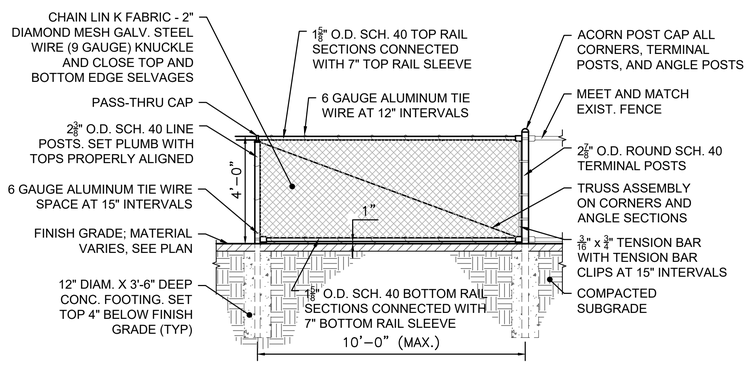

4' HIGH BLACK VINYL CHAIN LINK FENCE

NOT TO SCALE

NOTES:

1. ALL CHAIN LINK FENCE FABRIC SHALL BE KNUCKLED (TOP AND BOTTOM)
2. ALL CHAIN LINK FENCE POSTS, FABRIC, TIES AND MATERIALS SHALL BE BLACK PVC COATED.
3. CENTER UPRIGHT REQUIRED ON GATE LEAVES 8'-0" & WIDER. CENTER RAIL REQUIRED ON GATE LEAVE 6'-0" & HIGHER.
4. CONCRETE FOOTINGS SHALL BE FOUR (4) x THE POST DIAMETER, OR AS DESIGNATED ON INDIVIDUAL DETAILS.
5. ALL CHAIN LINK FABRIC SHALL BE INSTALLED ON THE USEABLE SIDE OF THE FENCE.
6. COORDINATE FINAL SIZES OF FRAMING AND POSTS FOR THE GATE WITH VENDOR PRIOR TO FABRICATION; ENLARGE SIZES AS NEEDED FOR 22' WIDE DOUBLE GATE TO ENSURE SUFFICIENT STRENGTH FOR LENGTH; PROVIDE EXTRA BRACING AND FRAMING AS NEEDED

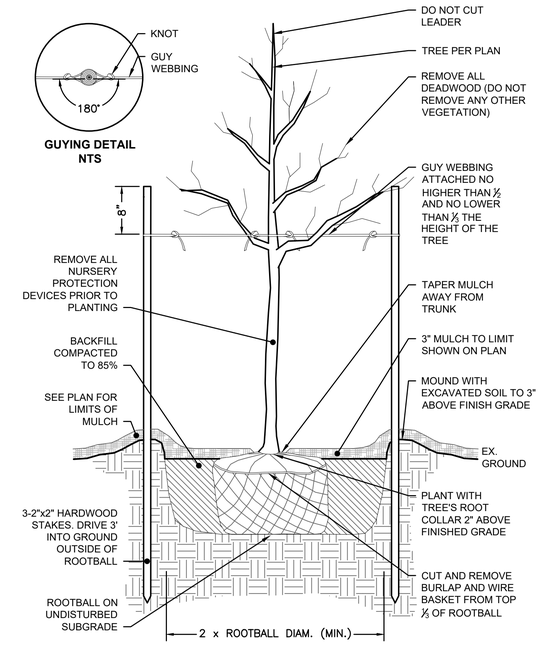

NOTE:
AFTER THE GUARANTEE PERIOD THE CONTRACTOR WILL BE RESPONSIBLE FOR THE REMOVAL OF STAKES AND GUY WEBBING.

DECIDUOUS TREE STAKING & PLANTING

NOT TO SCALE

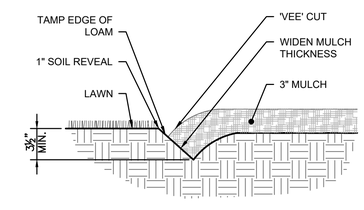

NOTE:
LOCATE BEDLINE AS SHOWN ON PLAN.

BEDLINE EDGE

NOT TO SCALE

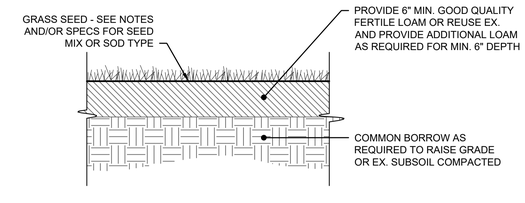

LOAM AND SEED

NOT TO SCALE

PREPARED BY

BETA
www.BETA-Inc.com

REGISTERED PROFESSIONAL

COMMONWEALTH OF MASSACHUSETTS
NATHAN SOCHA
NO. 4458
REGISTERED LANDSCAPE ARCHITECT

SUBCONSULTANT

PROJECT

Hopkinton Adaptive Playground

Construction Documents

Douglas Road
Lowell, MA

TITLE

DETAILS - SITE WORK AND PLANTING

NO.	REVISIONS	DATE

DRAWN BY:	NS, SB, MH
DESIGNED BY:	NS, SB
CHECKED BY:	NS, DM, SR
ISSUE DATE:	11/11/2025
BETA JOB NO.:	11439

SCALE

AS SHOWN

UNLESS OTHERWISE NOTED OR CHANGED BY REPRODUCTION

SHEET NO.

12

11/11/2025 9:51 AM G:\PLANNING\LANDSCAPE\11000S\11439 - HOPKINTON, MA - ADAPTIVE PLAYGROUND\DRAWINGFILES\PLANSET\11439 - HOPKINTON PLAYGROUND - STANDARD\PLANSET\11439 DETAILS PLAN.DWG (BETA STB BW.STB)

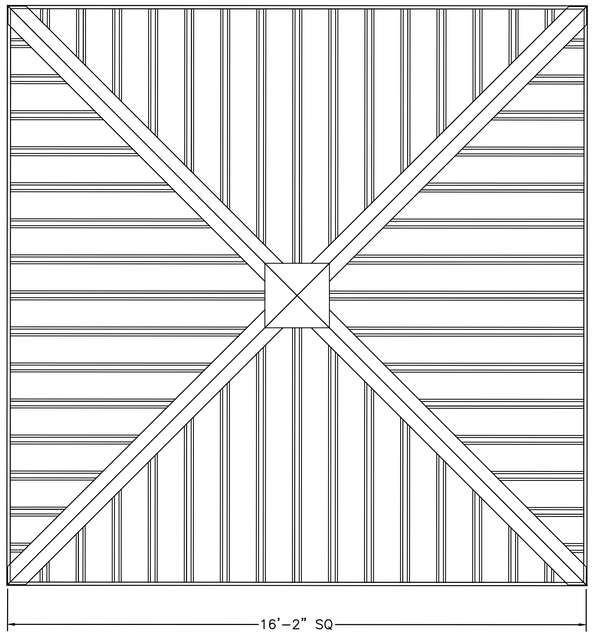

ROOF PLAN VIEW

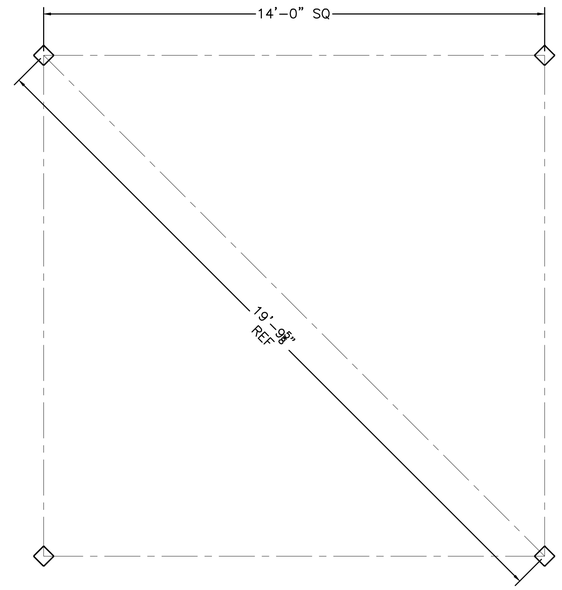

POST LAYOUT PLAN

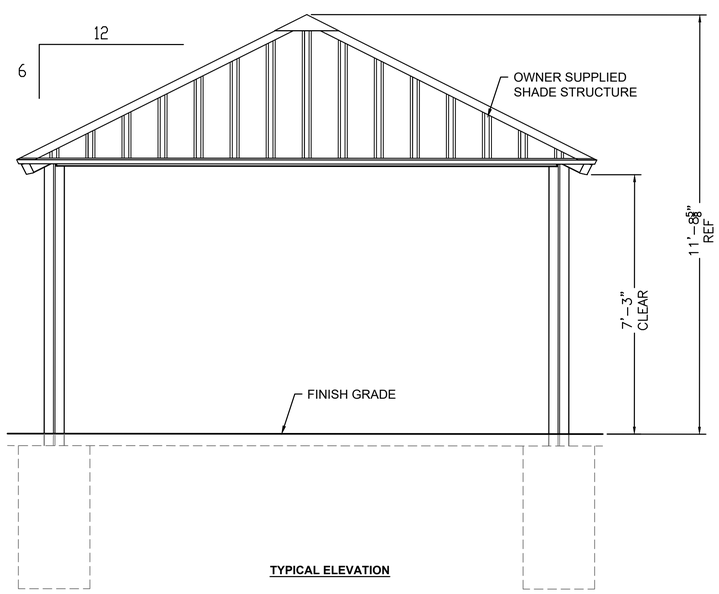

TYPICAL ELEVATION

GENERAL ROOF NOTES:
1. METAL ROOFING
   - 24 GAUGE
   - GALVALUME COATED
   - KYNAR 500 PAINTED
2. TRIM COLOR MATCHES ROOF
3. COLOR TO BE SELECTED BY OWNER.

ADD ALTERNATE 1 : SHADE STRUCTURE (INSTALL ONLY)

SCALE: ½"=1'–0"

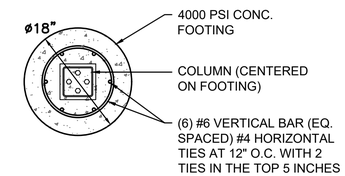

PLAN VIEW

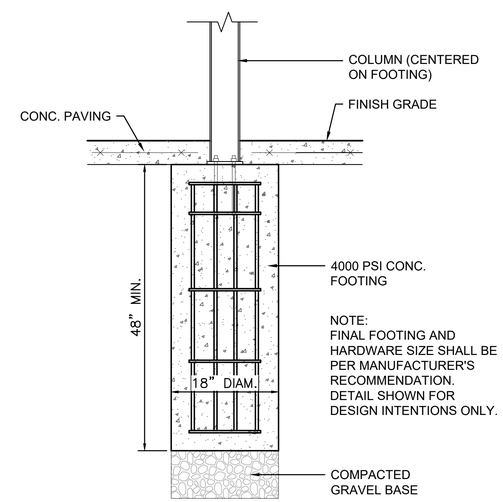

NOTE:
FINAL FOOTING AND HARDWARE SIZE SHALL BE PER MANUFACTURER'S RECOMMENDATION. DETAIL SHOWN FOR DESIGN INTENTIONS ONLY.

TYPICAL SECTION

ADD ALTERNATE 1: SHADE STRUCTURE FOOTING

SCALE: 1"=1'–0"

PREPARED BY

BETA
www.BETA-Inc.com

REGISTERED PROFESSIONAL

MASSACHUSETTS
NATHAN SOCHA
NO. 4458
REGISTERED LANDSCAPE ARCHITECT

SUBCONSULTANT

PROJECT

Hopkinton Adaptive Playground

Construction Documents

Douglas Road
Lowell, MA

TITLE

DETAILS - SHADE STRUCTURE

NO.	REVISIONS	DATE

DRAWN BY:	NS, SB, MH
DESIGNED BY:	NS, SB
CHECKED BY:	NS, DM, SR
ISSUE DATE:	11/11/2025
BETA JOB NO.:	11439

SCALE

AS SHOWN

UNLESS OTHERWISE NOTED OR CHANGED BY REPRODUCTION

SHEET NO.

13

11/11/2025 10:09 AM G:\PLANNING LANDSCAPE\11000S\11439 - HOPKINTON, MA - ADAPTIVE PLAYGROUND\DRAWINGFILES\PLANSET\11439 - HOPKINTON PLAYGROUND - STANDARD\PLANSET\11439 DETAILS PLAN.DWG (BETA STB BW.STB)