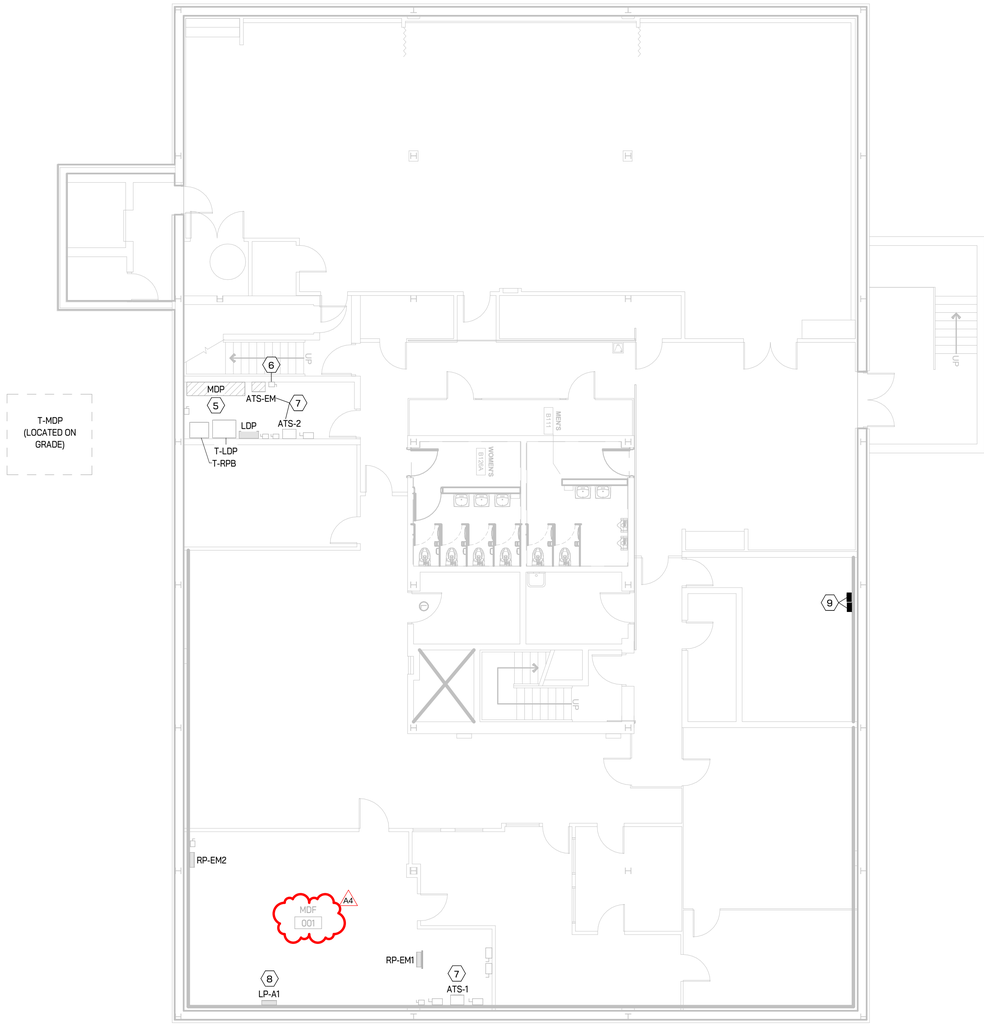

1 E100 LOWER LEVEL POWER PLAN
1/8" = 1'-0"
0 4' 8' 16'

ELECTRICAL POWER KEYED NOTES

1 PROVIDE NEW DIESEL EMERGENCY GENERATOR WITH 24-HOUR BASE MOUNTED TANK AND LEVEL 2 WEATHERPROOF ENCLOSURE. EXPAND ON EXISTING CONCRETE EQUIPMENT PAD TO SUPPORT NEW GENERATOR. REFER TO GENERATOR MANUFACTURER'S REQUIREMENTS FOR ALL ADDITIONAL LOW VOLTAGE CONNECTIONS.

2 PROVIDE NEW AUTOMATIC TRANSFER SWITCH (ATS-MDP) IN NEMA 4X RATED ENCLOSURE. TRANSFER SWITCH SHALL BE 4-POLE, CLOSED TRANSITION, AND ULSE RATED WITH MAIN BREAKER. ROUTE CONDUIT AND FEEDERS BELOW GRADE TO TRANSFER SWITCH AND FROM TRANSFER SWITCH TO EXISTING MDP (LOCATED IN LOWER LEVEL). BASIS OF DESIGN: CUMMINS POWER COMMAND X-SERIES.

3 PROVIDE NEW GENERATOR BYPASS SWITCH (GBS) FOR LIFE SAFETY EMERGENCY FEED FROM NEW GENERATOR. SWITCH SHALL BE NEMA 4X RATED, LOCKABLE, AND CONTAIN INTEGRAL CAM LOCK CONNECTION FOR PORTABLE GENERATOR. TRYSTAR TMTS-2 OR EQUIVALENT. ROUTE CONDUIT AND FEEDER BELOW GRADE TO SWITCH AND FROM SWITCH TO EXISTING ATS-EM DISCONNECT SWITCH.

4 PROVIDE DEDICATED 20A, 120V CIRCUITS FOR GENERATOR FUEL TANK ACCESSORIES. COORDINATE EXACT REQUIREMENTS WITH MANUFACTURER'S SPECIFICATIONS.

5 PROVIDE CONDUIT AND FEEDER FROM ATS-MDP (REFER TO SITE PLAN) TO EXISTING MDP SWITCHBOARD.

6 PROVIDE CONDUIT AND FEEDER FROM GBS (REFER TO SITE PLAN) TO ATS-EM DISCONNECT SWITCH.

7 PROVIDE GENERATOR MANUFACTURER'S CONTROL WIRING FROM ALL EXISTING AUTOMATIC TRANSFER SWITCHES TO ATS-MDP SO THAT ALL EQUIPMENT CAN BE MONITORED BY BUILDING BMS SYSTEM. CONTRACTOR SHALL INVESTIGATE AND PROVIDE ANY SOFTWARE/HARDWARE UPDATES TO EXISTING TRANSFER SWITCHES TO ENSURE EMERGENCY SYSTEM OPERATES AS DESCRIBED IN THE SEQUENCE OF OPERATIONS.

8 PROVIDE (3) 20A/1P SQUARE D CIRCUIT BREAKERS TO AVAILABLE SPACE IN PANELBOARD FOR GENERATOR ACCESSORY CIRCUITS.

9 PROVIDE GENERATOR AND ATS-MDP ANNUNCIATOR PANELS IN BUILDING SUPERVISOR'S OFFICE. ROUTE CONDUIT AND CABLING FROM GENERATOR AND TRANSFER SWITCH AS RECOMMENDED BY MANUFACTURER.

KEY PLAN

ISSUE DATE	ISSUED FOR
09/10/2025	Bids
09/23/2025	Addendum #1
10/27/2025	Addendum #4

DRAWN	NB
CHECKED	LB
APPROVED	MB

FRENCH
2851 High Meadow Circle | Suite 100
Auburn Hills | MI 48326
248.656.1377

IGNYTE
MECHANICAL + ELECTRICAL DESIGN

PROJECT
Livonia Public Schools

Central Office
Generator Upgrades

Livonia,
Michigan

SHEET
LOWER LEVEL
ELECTRICAL PLAN

PROJECT NUMBER
2025-044

SHEET NUMBER
E100

ELECTRICAL PANEL FEEDER SCHEDULE

PANELBOARD	FED FROM	FEEDER INFORMATION						
	PANEL - CIRCUIT	LOAD CURRENT	BREAKER / POLES	# OF RUNS	WIRE	NEUTRAL	GROUND	CONDUIT
480Y/277								
ATS-EM	GBS - 1	23 A	100 A / 3	1	#3	#3	#8	2"C
ATS-MDP	GEN-1 - 2,4,6	346 A	800 A / 3	2	600kcmil	600kcmil	1/0	3-1/2"C
GBS	GEN-1 - 1,3,5	23 A	100 A / 3	1	#3	#3	#8	1-1/4"C
MDP	ATS-MDP - 1	346 A	800 A / 3	2	600kcmil	600kcmil	1/0	3-1/2"C

NOTES:
1. FOR ALL AUTOMATIC TRANSFER SWITCHES, PROVIDE CONDUIT AND FEEDER SIZES FROM BOTH NORMAL AND EMERGENCY SOURCES AS INDICATED IN THE SCHEDULE ABOVE.
2. FOR LIFE SAFETY FEEDERS, PROVIDE 2-HOUR RATED RHH TYPE CABLE WHEN ROUTED WITHIN BUILDING.

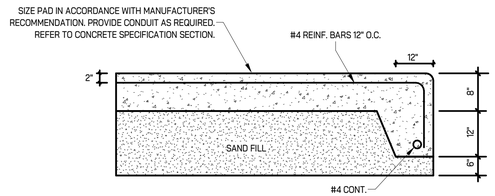

1 / E501 CONCRETE EQUIPMENT PAD DETAIL
NOT TO SCALE

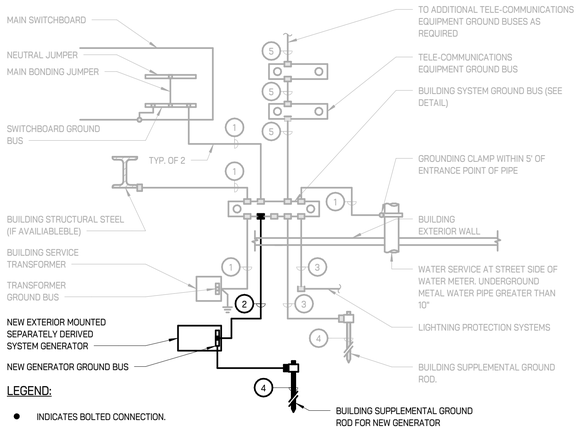

LEGEND:

- ● INDICATES BOLTED CONNECTION.
- ■ INDICATES EXOTHERMIC WELD CONNECTION, COMPATIBLE WITH MATERIALS BEING JOINED.
- (1) 4/0 AWG INSULATED COPPER GROUND CONDUCTOR IN 30mm CONDUIT.
- (2) 4/0 AWG COPPER GROUND CONDUCTOR ENCASED IN CONCRETE.
- (3) 4/0 AWG BARE COPPER GROUND CONDUCTOR.
- (4) 19mm x 3050mm (3/4" x 10'-0") LONG COPPER-CLAD GROUND ROD DRIVEN WITH TOP 300mm (12") BELOW GRADE.
- (5) 2/0 AWG INSULATED COPPER GROUND CONDUCTOR IN 30mm CONDUIT.

2 / E501 BUILDING GROUNDING ELECTRODE SYSTEM
1/8" = 1'-0"

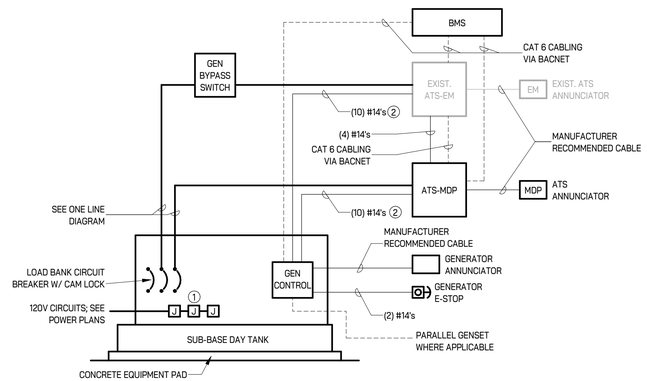

1. FACTORY WIRE/POWER ALL GENERATOR AND FUEL TANK ACCESSORIES INCLUDING: ENCLOSURE LIGHTS, HEATERS, BATTERY CHARGERS, AND RECEPTACLES

2. PROVIDE CABLING FOR THE FOLLOWING SIGNALS:
   - GENERATOR START
   - GENERATOR RUNNING
   - GENERATOR STOP
   - GENERATOR TROUBLE
   - SPARE

3 / E501 GENERATOR INTERCONNECTION DIAGRAM
NOT TO SCALE

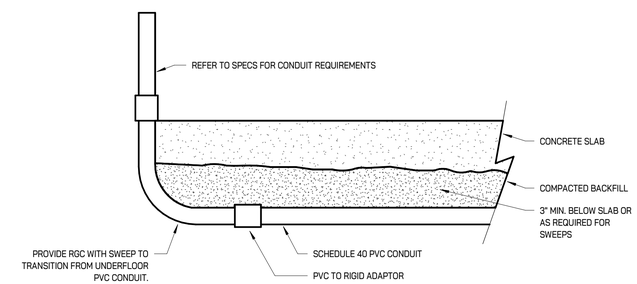

4 / E501 UNDERFLOOR CONDUITS IN SLAB ON GRADE INSTALLATION
1/8" = 1'-0"

GENERATOR SOLUTION SUMMARY

PROJECT PARAMETERS

Frequency (hz):	60.0	Number of Genset to Parallel:	1.0
Duty:	Standby	Ambient Temperature (F) :	77.0
Phase:	Three	Altitude (ft):	360.99
Voltage:	277/480, Series Wye	Max Allowable Temperature Rise:	125.0
Fuel Type(s):	Diesel	Max Allowable Project Voltage Dip (%):	35.0
Emissions Preference:	US Stationary Emergency	Max Allowable Project Frequency Dip (%):	10.0
Country:	United States		
Min Load Capacity (%):	30.0		
Max Load Capacity (%):	90.0		

RECOMMENDED GENERATOR SET CONFIGURATION

Generator Set Name:	DFEJ	B-Code:	B252
Engine Name:	QSX15-G9 Nonroad 2	R-Code:	R002
Fuel:	Diesel	Number of Leads:	12.0
Cooling System:	Enhanced High Ambient	Reconnectable:	Yes
Alternator Frame:	HC5D	Full Single Phase Output:	No
Alternator Winding:	311.0	Increased Motor Starting:	No
Alternator Exitation:	PMG	Extended Stack:	No
Temperature Rise:	125.0		
Max SkVA:	1896.0		

POWER SYSTEM SUMMARY

LOADS AND STEPS

Step #	Step Name / Load Name	Load Qty	Starting kW	Starting kVA	Running kW	Running kVA	Running Amps	Cyclic Load	NonLinear Load
1	**Step 1**		**10.0**	**10.53**	**10.0**	**10.53**	**12.68**		
	Light Load 1	1	10.0	10.53	10.0	10.53	12.68		Y
2	**Step 2**		**34.5**	**38.33**	**34.5**	**38.33**	**46.16**		
	UPS Load 1	1	34.5	38.33	34.5	38.33	46.16		Y
3	**Step 3**		**264.0**	**293.33**	**244.0**	**271.11**	**326.48**		
	General load ATS1	1	144.0	160.0	144.0	160.0	192.68		
	HVAC Loads	1	120.0	133.33	100.0	111.11	133.8		Y

PRODUCT CAPACITY

Project Running (kWe):	288.5	Project Max Starting(kWe):	308.5
Base Product Rating (kWe):	450	Project Effective Max Starting(kWe):	294.16
Site Adjusted Product Rating (kWe):	450	Max Starting kWe:	516
Product kWe Capacity (%):	64.11	Product Capacity (%):	57.01
Project Running (kVA):	319.97	Total Running Non-Linear kVA:	48.86
Base Alternator Rating (kVA):	643.8	Max Allowed(THDV %):	10
Site Adjusted Alternator Rating (kVA):	643.8	Total Voltage Harmonic Distortion (THDV)%:	2.54
Product kVA Capacity (%):	49.7		

Note: Capacity % values are within the user-selected project parameters for product capacity. If the number of generator sets is greater than one, the values here will reflect one generator set assuming the loads are evenly shared.

TRANSIENT PERFORMANCE

Step #	Step Name	Voltage Dip %	Voltage Recovery Time	Frequency Dip %	Frequency Recovery Time
1	Step 1	0.34	0.21	0.12	0.11
2	Step 2	1.17	0.74	0.4	0.37
3	Step 3	12.35	3.44	3.3	2.08

Note: Voltage and frequency dips and recovery times are estimates based on measured performance of prototype testing or advanced simulation. Recovery times may be assumed to be based on ISO8528-5 G2 class bandwidths unless otherwise stated in the model Spec Sheet. Typically, best practice may allow for approximately 5 seconds between application of load steps when designing your system. These values are within the user-selected project parameters for max allowable voltage and frequency dip performance.

General load ATS1

Load Type: General

User Inputs		Load Requirements	
Phase:	Three	Running PF:	0.90
Voltage:	480.0	Running kW:	144.0
Running kW:	144.0	Running kVA:	160.0
Running kVA:	160.0	Starting PF:	0.9
Power Factor:	0.9	Starting kW:	144.0
Running Amps:	192.68	Running Amps:	192.68
Rectifier Type:	None	Starting kVA:	160.00
Unit of Rating:	KVA		

HVAC Loads

Load Type: User Defined

User Inputs		Load Requirements	
Phase:	Three	Running PF:	0.90
Voltage:	480.0	Running kW:	100.0
Running kW:	100.0	Running kVA:	111.11
Running kVA:	111.11	Starting PF:	0.9
Starting kW:	120.0	Starting kW:	120.0
Power Factor:	0.9	Running Amps:	133.8
Running Amps:	133.8	Starting kVA:	133.33
Starting kVA:	133.33	Starting Amps:	160.57
Starting Amps:	160.57		
Efficiency (%):	100.0		
Rectifier Type:	6 pulse filtered		
Running Unit of rating:	KW		
Starting Unit of rating:	KW		
Harmonic Content (THDI%):	13.0		

Light Load 1

Load Type: Light

User Inputs		Load Requirements	
Phase:	Three	Running PF:	0.95
Voltage:	480.0	Running kW:	10.0
Light type:	LED	Running kVA:	10.53
Running kW:	10.0	Starting PF:	0.95
Running kVA:	10.53	Starting kW:	10.0
Power Factor:	0.95	Running Amps:	12.68
Running Amps:	12.68	Starting kVA:	10.53
Rectifier Type:	LED Driver (EN61000-3-2)	Running NLL kVA:	10.53
Unit of Rating:	KW		
Harmonic Content (THDI%):	33.0		

UPS Load 1

Load Type: UPS

User Inputs		Load Requirements	
Phase:	Three	Running PF:	0.90
Voltage:	480.0	Running kW:	34.5
Rated KVA:	30.0	Running kVA:	38.33
Soft Ramp:	None	Starting PF:	0.90
Load Factor:	100.0	Starting kW:	34.5
Power Factor:	0.9	Running Amps:	46.16
Efficiency (%):	90.0	Starting kVA:	38.33
Rectifier Type:	12 pulse	Running NLL kVA:	38.33
Unit of Rating:	Output		
Battery Charge Rate (%):	15.0		
Harmonic Content (THDI%):	10.0		

A4

NOTE:
1. EQUALS MANUFACTURER(S) SHALL MEET OR EXCEED DESIGN PARAMETERS OF GENERATOR CALCULATION AS SHOWN. GENERATOR LOADING BASED ON EXISTING METERING DATA. CONTRACTOR SHALL PROVIDE COST IMPACTS COMPARED TO BASIS OF DESIGN FOR OWNER/ENGINEER REVIEW.
2. GENERATOR SHALL BE PROVIDED WITH BACNET IP GATEWAY FOR COMMUNICATION TO BUILDING BMS.
3. CONTRACTOR SHALL INVESTIGATE EXISTING AUTOMATIC TRANSFER SWITCHES AND EXISTING 100KW GENERATOR CONTROLLER TO ENSURE EMERGENCY SYSTEM OPERATES AS DESCRIBED IN THE SEQUENCE OF OPERATIONS. PROVIDE ALL SOFTWARE/HARDWARE UPDATES TO EXISTING EQUIPMENT AS REQUIRED.
4. MAXIMUM SOUND LEVEL SHALL BE 74dBA AT 7 METERS UNDER FULL LOAD PER CUMMINS REQUIREMENTS.
5. PROVIDE ANY START-UP AND TESTING VERIFICATION FOR ANY THIRD PARTY COMMISSIONING REQUIREMENT.
6. ELECTRICAL CONTRACTOR SHALL PROVIDE SEPARATE QUOTE FOR AN ALL INCLUSIVE SHORT CIRCUIT, COORDINATION AND ARC FLASH STUDY OF THE ENTIRE BUILDING SYSTEM FOR OWNER TO REVIEW.

GENERATOR SEQUENCE OF OPERATIONS

1. UPON LOSS OF UTILITY POWER, ATS-MDP SHALL SIGNAL GENERATOR-1 TO START. ATS-EM SHALL TRANSFER WITHIN 10 SECONDS TO SUPPLY LIFE SAFETY LOAD IN ACCORDANCE WITH NATIONAL ELECTRIC CODE.

2. ONCE ATS-EM LOAD IS SUPPLIED, ATS-MDP SHALL TRANSFER TO EMERGENCY POSITION. ATS-EM SHALL REMAIN IN THE EMERGENCY POSITION UNTIL UTILITY POWER HAS RETURNED.

3. GENERATOR-1 SHALL CONTINUOUSLY MONITOR TOTAL DEMAND ON ATS-MDP AND LOAD SHED AS REQUIRED IF GENERATOR BECOMES OVERLOADED. GENERATOR AND TRANSFER SWITCH COMMUNICATION SHALL ENSURE ATS-EM LOAD IS PRIORITIZED.

4. GENERATOR-2 SHALL BE PROGRAMMED WITH TIME DELAY AND ALLOW GENERATOR-1 TO CARRY ATS-1 AND ATS-2 LOADS IN A TYPICAL POWER OUTAGE SCENARIO. IN THE EVENT OF GENERATOR-1 FAILURE, GENERATOR-2 SHALL ENERGIZE AND CARRY ATS-1 AND ATS-2 LOADS. CONTRACTOR AND MANUFACTURER'S TECHNICIAN SHALL FIELD VERIFY AND TEST TIME DELAY SETTINGS.

5. ONCE UTILITY POWER HAS RETURNED, ATS-MDP AND ATS-EM SHALL TRANSFER BACK TO NORMAL POSITION AFTER A MINIMUM OF 5 MINUTES. GENERATOR SHALL RUN THROUGHOUT THE 5 MINUTE DURATION AND ENTER COOL-DOWN MODE ONCE TRANSFER SWITCHES ARE BACK TO NORMAL POSITION.

(REFER TO GENERATOR INTERCONNECTION DETAIL FOR WIRING TO AUTOMATIC TRANSFER SWITCHES AND BMS)

KEY PLAN

ISSUE DATE	ISSUED FOR
09/10/2025	Bids
09/23/2025	Addendum #1
10/27/2025	Addendum #4

DRAWN	NB
CHECKED	LB
APPROVED	MB

FRENCH
2851 High Meadow Circle | Suite 100
Auburn Hills | MI 48326
248.656.1377

IGNYTE
MECHANICAL + ELECTRICAL DESIGN

PROJECT
Livonia Public Schools

Central Office Generator Upgrades

Livonia, Michigan

SHEET
ELECTRICAL SCHEDULES AND DETAILS

PROJECT NUMBER
2025-044

SHEET NUMBER
E501