

nacht&lewis

To all bidders for furnishing all labor and materials necessary and required for constructing the above referenced project. This Addendum has been prepared to clarify, modify, delete, or add to the original or previously modified Contract Documents for the above referenced project. Revisions to items listed here shall supersede description thereof prior to above date. All conditions not specifically referenced here shall remain the same. It is the obligation of the General Contractor to make subcontractors aware of any items herein that may affect submitted bids.

Acknowledge receipt of all Addenda by inserting the addendum number and date in the space provided on the Bid Form. Failure to do so may subject Bidder to disqualification. All addenda items refer to the Specifications and Drawings unless specifically noted otherwise.

SPECIFICATIONS

AD01.1 Specification Section 11 40 00 – FOODSERVICE EQUIPMENT

- REPLACE the section in its entirety with provided attachment **AD01-1**.

AD01.2 Specification Section 00 01 10 – VOLUME 1 TABLE OF CONTENTS

- REPLACE the section in its entirety with provided attachment **AD01-16**.

AD01.3 Specification Section 00 01 15 – LIST OF DRAWINGS TABLE AND SCHEDULES

- REPLACE the section in its entirety with provided attachment **AD01-17**.

AD01.4 Specification Section 00 45 10 – AGREEMENT

- REPLACE the section in its entirety with provided attachment **AD01-18**.

AD01.5 Specification Section 00 91 00 – COMMISSIONING

- ADD the section in its entirety with provided attachment **AD01-19**.

AD01.6 Specification Section 23 08 00 – MECHANICAL SYSTEM COMMISSIONING

- ADD the section in its entirety with provided attachment **AD01-20**.

AD01.7 Specification Section 26 08 00 – ELECTRICAL SYSTEM COMMISSIONING

- ADD the section in its entirety with provided attachment **AD01-21**.

DRAWINGS

AD01.8 Sheet FS1.1 – FOODSERVICE EQUIPMENT FLOOR PLAN

- REPLACE the Sheet in its entirety with provided attachment **AD01-2**
- Changed serving line configuration and load center location,
- Changed salad bar location
- Changed milk cooler location
- Add a mobile point of sale unit.
- Moved serving line slightly for clearance.
- Removed griddle, char broiler
- Added mobile warmer
- Added third drawer to the mobile tables
- Mixer model number changed

AD01.9 Sheet FS2.1 - FOODSERVICE EQUIPMENT PLUMBING PLAN

- REPLACE the Sheet in its entirety with provided attachment **AD01-3**
- Updated gas connection requirements for equipment change under hood

AD01.10 Sheet FS3.1 - FOODSERVICE EQUIPMENT ELECTRICAL PLAN

- REPLACE the Sheet in its entirety with provided attachment **AD01-4**
- Updated coil freezer coil power requirement (latest code-compliant refrigeration revision)
- Load center at serving line location and requirements changed
- Swapped electrical location with milk cooler and salad bar.
- Removed floor outlets and changed E15 to warmer under hood with shunt trip breaker.
- Power changed for remote refrigeration (latest code-compliant refrigeration revision)

AD01.11 Sheet FS5.4 - FOODSERVICE EQUIPMENT EXHAUST HOOD DETAILS

- REPLACE the Sheet in its entirety with provided attachment **AD01-5**
- Update equipment under hood.

AD01.12 Sheet FS7.1 - FOODSERVICE EQUIPMENT REMOTE REFRIGERATION

- REPLACE the Sheet in its entirety with provided attachment **AD01-6**
- Update remote refrigeration unit to meet new code compliant refrigeration.

AD01.13 Sheet FS8.1 – FOODSERVICE EQUIPMENT ANCHORAGE DETAILS

- REPLACE the Sheet in its entirety with provided attachment **AD01-7**
- REVISE sink heights at details A, B, C, and D.

AD01.14 Sheet FS8.3 – FOODSERVICE EQUIPMENT ANCHORAGE DETAILS

- REPLACE the Sheet in its entirety with provided attachment **AD01-8**

- REMOVE detail B/FS8.3
- REMOVE detail D/FS8.3
- ADD detail J/FS8.3 for refrigeration platform.

AD01.15 Sheet FS9.1 – FOODSERVICE EQUIPMENT ELEVATIONS

- REPLACE the Sheet in its entirety with provided attachment **AD01-9**
- Updated 3 compartment sink, under hood equipment, removed splash, and added drawers to elevation.

AD01.16 Sheet FS9.2 – FOODSERVICE EQUIPMENT SERVING LINE

- REPLACE the Sheet in its entirety with provided attachment **AD01-10**
- Updated serving line equipment.

AD01.17 Sheet FS9.3 – FOODSERVICE EQUIPMENT SERVING LINE

- REPLACE the Sheet in its entirety with provided attachment **AD01-11**
- Updated serving line equipment.

AD01.18 Sheet FS9.4 – FOODSERVICE EQUIPMENT SERVING LINE

- REPLACE the Sheet in its entirety with provided attachment **AD01-12**
- Updated serving line equipment.

AD01.19 Sheet FS9.5 – FOODSERVICE EQUIPMENT SERVING LINE

- REPLACE the Sheet in its entirety with provided attachment **AD01-13**
- Updated serving line equipment.

AD01.20 Sheet FS9.6 – FOODSERVICE EQUIPMENT SERVING LINE

- REPLACE the Sheet in its entirety with provided attachment **AD01-14**
- Updated electrical and plumbing kitchen equipment schedule.

BID RFI QUESTIONS

AD01.21 Bid Question #1

Q: What hardware is needed at the 23 openings and 3 gates without a hardware group?

A: Doors identified in the door schedule without a hardware group will not receive new hardware. Many doors are existing to remain and are included in the schedule for new sign scope. The gate hardware groups are in specification section 08 71 00 with additional hardware specified in 32 31 13

AD01.22 Bid Question #2

Q: Door #106 at Dry Food Storage refers to detail 16/A601. This sheet does not exist. Please provide missing details. Please advise on missing information for this door?

A: Revise Door #106 to Type A HM door panel, Type 1 HM Frame, both painted. Other information like door hardware group to remain.

AD01.23 Bid Question #3

Q: It is not clear what the Signal Terminal Cabinet "STC-MU" is on page E214. Is it for the PA system only? What cables are going to this cabinet? Are we installing a new cabinet here? Is there any backbone cabling for this?

A: STC-MU is the signal terminal cabinet for terminating low voltage wiring (Intercom, Intrusion Alarm, Fire Alarm). Refer to numbered note 7 on E214 and spec section 26 27 16 for cabinet requirements. See E111, E112 and E121 for backbone cabling.

AD01.24 Bid Question #4

Q: Please confirm there are no fire sprinkler work of any kind on this project.

A: The building is not covered with traditional fire sprinklers. No new fire sprinkler work is included on this project. Fire suppression systems are included as part of the kitchen hood equipment.

AD01.25 Bid Question #5

Q: Please provide a light fixture schedule.

A: See attachment **AD01-15** for light fixture schedule.

AD01.26 Bid Question #6

Q: Please confirm if the TV brackets are CFCI.

A: TV Brackets are CFCI and as specified in 10/A640.

AD01.27 Bid Question #7

Q: Please confirm if the TV's will be OFCI.

A: Confirmed, TVs will be OFCI.

AD01.28 Bid Question #8

Q: Will we need to maintain access through the drop off area during construction?

A: Drop off will need to remain accessible during designated drop off times.

AD01.29 Bid Question #9

Q: Is there an engineer’s estimate for this project?

A: Estimated at approximately $3,000,000.00 (Three Million Dollars).

List of Attachments

AD01-01	**Specification Section 11 40 00 (31 pages)**
AD01-02	**Sheet FS1.1 (1 page)**
AD01-03	**Sheet FS2.1 (1 page)**
AD01-04	**Sheet FS3.1 (1 page)**
AD01-05	**Sheet FS5.4 (1 page)**
AD01-06	**Sheet FS7.1 (1 page)**
AD01-07	**Sheet FS8.1 (1 page)**
AD01-08	**Sheet FS8.3 (1 page)**
AD01-09	**Sheet FS9.1 (1 page)**
AD01-10	**Sheet FS9.2 (1 page)**
AD01-11	**Sheet FS9.3 (1 page)**
AD01-12	**Sheet FS9.4 (1 page)**
AD01-13	**Sheet FS9.5 (1 page)**
AD01-14	**Sheet FS9.6 (1 page)**
AD01-15	**Light Fixture Schedule (1 page)**
AD01-16	**Specification Section 00 01 10 (3 pages)**
AD01-17	**Specification Section 00 01 15 (3 pages)**
AD01-18	**Specification Section 00 45 10 (6 pages)**
AD01-19	**Specification Section 00 01 10 (5 pages)**
AD01-20	**Specification Section 00 01 10 (6 pages)**
AD01-21	**Specification Section 00 01 10 (3 pages)**

End of Addendum No. 1 (77 pages)

SECTION 11 40 00
FOODSERVICE EQUIPMENT

PART 1 - GENERAL

1.1 RELATED DOCUMENTS

A. Drawings and general provisions of the Contract, including General and Supplementary Conditions and Division 01 Specification Sections, apply to this Section.

1.2 SUMMARY

A. This section includes of furnishing all labor and material required to provide and deliver all food service equipment herein specified into the building, uncrate, assemble, set-in-place, level and completely install, exclusive of final utility connections.

B. Furnish all material and labor required to completely provide, deliver and install all Food Service Equipment as specified herein and as shown on the drawings. This work shall be in strict accordance with the plans and specifications with all dimensions verified in the field prior to any fabrication.

1. Coordinate the Food Service Equipment work with the respective trades performing preparatory work for the installation of the Food Service Equipment.

2. Comply with all Federal, State and Municipal regulations which bear on the execution of this project. Food service aisles shall be a minimum of 36” wide and tray slides shall be mounted at 34” maximum above the finished floor. Food service equipment required to be accessible shall conform to all reach requirements in CBC 1104B-5, 1104B-6 and figures 11B-16 and 11B-17.

C. Work Includes:

1. Materials shown on the Food Service Equipment Schedule.

2. Piping, valves, and plumbing accessories that are integral within the equipment.

3. Furnishing control devices such as solenoid valves that are not integral with the equipment, for installation by Heating ventilating & air conditioning division 23 and/or Electrical Division 26

4. Wiring, wiring devices, controls and mechanical accessories that are integral in the equipment.

5. Ventilating ducts, flues, controls and mechanical accessories that are integral in the equipment.

6. Anchors, fasteners, fillers and sealants for mounting equipment securely in place.

7. Cooperation with all other contractors on the job including the furnishing of information in the form of drawings, wiring diagrams and other data.

8. Touch-up painting after the installation of the food service equipment.

D. Related Sections include the following:

1.

2. Division 16 Electrical

1.3 QUALITY ASSURANCE

A. QUALIFICATIONS:

1. Installer: Regularly engaged in providing food service equipment from manufacturers of this type of equipment a minimum of 5 years with at least 5 installations of this size and type that are at least each 3 years old.

B. STANDARD OF MANUFACTURE

1. Food service equipment that is specified as "custom" having no manufacture name or model number shall be manufactured by a Food Service Equipment Fabricator with at least five (5) years' experience with engineering, design and fabrication of food service equipment. The manufacture shall be subject to the review of the Architect and/or Consultant and shall be approved by the National Sanitation Foundation. All Fabricated equipment shall be constructed in strict compliance with the latest standards of the National Sanitation Foundation and shall bear the mark of the National Sanitation Foundation in full compliance with all applicable codes and ordinances.

2. All electrically heated or operated equipment shall bear the seal of approval of the Underwriters Laboratories and shall comply with the National Electrical Code and all local Codes and Ordinances.

3. All food service equipment that is specified as "buy-out" having a specific manufacture name and model number shall comply with the latest editions of the National Sanitation Foundation.

4. All Gas heated or operated equipment shall be the seal of approval of the American Gas Association (AGA)

5. All Steam heated or operated equipment shall conform to the standard of the American Society of Mechanical Engineers (ASME) and shall be ASME approved.

6. Food shields and Sneeze guards shall meet all the requirements of National Sanitation Foundation (NSF) Standard 2.

1.4 SUBMITTALS

A. Spare

B. SHOP DRAWINGS / EQUIPMENT BROCHURES

1. No ordering or fabrication of equipment shall take place until the equipment brochures and shop drawings have been reviewed in writing by the Architect and/or Consultant. Receipt of this review shall not relieve the Contractor from the responsibility of verifying all quantities and related dimensions, maintaining the specified quality of equipment, and verifying conditions of the job site.

2. Equipment Brochures; within twenty (20) calendar days after award of the contract, brochures containing manufacturers specification sheets, dimensioned drawings and/or other pertinent data describing all items of standard manufacture shall be submitted for review by the Architect and/or Consultant. Sheets with the notation "Fabricated Item" and name of the fabricated item, as well as any required mechanical, plumbing or electrical requirements

shall be inserted between the manufacturer's specification sheets describing the "buy-out" equipment.

3. Rough-in and Equipment Location Drawings; within thirty (20) calendar days after award of the contract, complete rough-in and details for electrical and plumbing services with both vertical and horizontal dimensions, from column center-lines or exterior walls for location said connection points and rough-in locations shall be submitted for review by the Architect and/or Consultant. Equipment location plans shall be drawn to scale of not less than 1/4" = 1'-0" and include a schedule of equipment clearly identifying all items. Minimum drawings size shall be 24"x 36".

4. Shop Drawings; within thirty (30) calendar days after award of the contract, shop fabrication drawings shall be submitted for review by the Architect and/or Consultant. Plans shall be drawn to scale of not less than 1/2"=1'-0". Additional plan views, elevations and sections at 3/4"=1'-0" shall be supplied of all counters and tables with complete dimensions. All shop practices regarding joints, gussets, bracing, tie-downs, supports, etc. shall be clearly defined as well as gauges and quality of metals and brands and model numbers of all miscellaneous fittings, plumbing and electrical trim. The drawings shall also show locations of blocking (supplied under another sections) for all wall and ceiling mounted Food Service Equipment. Minimum drawings size shall be 24"x36".

C. SAMPLES

1. Provide all samples if specification requested.

D. SUBSTITUTIONS:

1. Manufacturer's listed in this section are used as standards for quality. All Substitutions shall be approved by the Architect and/or Consultant prior to installation.

2. Refer to Division 1 - General Requirements for procedures governing substitutions

3. Only one substitution for each item will be considered.

4. Installation of any qualified substituted equipment is the Food Service Equipment Contractor's responsibility. Including any mechanical, electrical, structural changes required for the installation of qualified substitution shall be without additional cost to the Owner.

1.5 DISCREPANCIES:

A. In the event of discrepancies within the Contract Documents, the Architect and/or Consultant shall be so notified in sufficient time prior to bid opening, ten (10) days to allow issuance of an addendum.

B. If time does not permit notification or clarification of discrepancies prior to the bid opening, following shall apply: The drawings and drawing schedules shall govern in matters of quantity; the specifications in matter of quality. In the event of conflict within drawings involving quantities, or within the specifications involving quality, the greater quantity and high quality shall apply. Such discrepancies shall be noted and clarified in the contractors bid. No additional allowances will be made because of errors, ambiguities, or omissions which reasonable should have been discovered during the preparation of the bid.

1.6 RESPONSIBILITY:

A. The work as specified in this division shall include assuring that all required submittals conform to the intent and meaning of the documents, conditions at the job site, and all local codes and ordinances.

B. Visit the job site to field check actual wall dimensions and utility rough-ins. Be responsible for furnishing, fabricating, and installing the equipment in accordance with the available space and utility services as they exist on the job site.

C. Check all door openings, passageways, elevators, etc., to verify that the equipment can be transported to its proper location within the building. If necessary, check the possibility with the General Contractor of holding wall erection, placement of doorjambs, window, etc. for the purpose of moving equipment to its proper location.

D. Notify the Architect and/or Consultant of any discrepancies between the plans and specification prior to fabrication of any equipment, to actual condition on the job.

E. If any special hoisting equipment and operators are required, include cost as part of the bid for this work.

1.7 DELIVERY AND STORAGE

A. All equipment specified herein shall be delivered to the job site; received and handled by the Contractor or his authorized agent. The Owner shall in no way be expected to store or handle any such equipment.

B. All equipment shall be delivered in such a manner as to protect it against dirt, water, chemical or mechanical injury.

C. Throughout the progress of the work, the Contractor shall keep the working area free of debris of all types resulting from his work.

D. All packing material shall be removed from the project location by the Contractor.

1.8 COORDINATION

A. Coordinate work with mechanical, electrical, plumbing, interiors and other trades whose work is in conjunction with equipment specified herein.

1.9 MEASUREMENTS

A. Verify all dimensions shown on the drawings by taking field measurements at the job site prior to fabrication of equipment or ordering equipment. Proper fit and attachment of all parts is required and is the sole responsibility of the Food Service Contractor. If necessary, all equipment shall be fabricated so that it may be handled through finished door openings.

1.10 PRODUCT REQUIREMENTS

A. Spare

1.11 GUARANTEE / WARRANTY

A. All work shall be guaranteed by the Foodservice Equipment Contractor against all defects for a term of one (1) year from the date of notice of completion. This guarantee shall cover replacement of defective material at the Foodservice Equipment Contractor expense, including transportation and labor. This guarantee will not cover any cost for replacement of parts or work made necessary by carelessness or misuse of the equipment by others.

B. The Food Service Equipment Contractor shall provide at his own expense the installation, start-up and service for one (1) year from the date of recording the notice of completion of the project; the replacement of all condensing units and other refrigeration devices supplied under this contract. In addition to this one (1) year free service, the condensing units shall have a five (5) year compressor warranty; said warranty commencing at the date of completion.

PART 2 PRODUCTS

2.1 MATERIALS

A. Metal for construction purposes, where entirely concealed, shall be steel of wrought iron sections galvanized by the hot-drip process after fabrication. Bolts, screws, rivets, and similar attachments to this galvanized work shall be galvanized or brass. Exposed screw and rivet work shall be finished to match adjacent surfaces, flush and buffed smooth. Finished work shall be free of tool or construction marks, dents, or other imperfections; and at the completion of the work, all metal shall be gone over with a portable machine and buffed and dressed to perfect surfaces.

B. All materials shall be new and of first grade. All gauges specified herein shall be minimum and shall be minimum and shall be established after polishing. They shall refer to:

1. U.S. Standard Gauge for sheets and plates.

2. Stainless steel shall be manufactured by one of the following: Allegheny Ludlum Steel Corporation, American Rolling Mills, U.S. Steel Corporation.

C. The Contractor will be required to furnish a certified copy of the mill analysis of materials to the Architect and/or Consultant.

D. Stainless steel sheets shall conform to ASTM A240, Type 304 Condition A, 18-8 having a No. 4 finish. No.2B finish shall be acceptable on surfaces of equipment not exposed to view. All sheets shall be uniform throughout in color, finish and appearance.

E. Stainless steel tubing and pipe shall be Type 304, 18-8, having a No. 4 finish, and shall conform to either ASTM A213 if seamless or ASTM A249 if welded.

F. Galvanized steel shall be approved grade of copper-bearing steel sheets with a minimum copper content of 20%. All sheets to be commercial quality, stretcher leveled, bonderized and re-rolled to insure smooth surface. Galvanized steel shall not be allowed in the construction and fabrication of any “Fabricated Assembly” items.

G. All millwork materials shall be free from defect impairing strength, durability, or appearance; straight and free from warpage; and the best grade for their particular function. All wood shall be well seasoned and kiln dried and shall have an average moisture content of 8%, a maximum of 10%, and a minimum of 5%.

H. Plywood and other woodwork of treatable species, where required by code, shall be fire-retardant treated to result in a flame spread rating of 25 or less with no evidence of significant progressive combustion when tested for 30 minutes duration under ASTM E-84 and shall bear the testing laboratory mark on the surface to be concealed.

I. Concealed softwood or hardwood lumber shall be of poplar, Douglas fir, basswood, red oak, birch, maple, beech or other stable wood and shall be select or better grade, unselected for color and grain, surfaced four sides, square-edged, and straight. Basswood may be used where fire-retardant treated materials are required.

J. Face veneers shall be matched for color and grain to produce balance and continuity of character. Mineral streaks and other discolorations, wormholes, ruptured grain, loose texture, doze, or shake will not be permitted. Face veneer leaves on each surface shall be full-length, book matched, center matched, and sequence matched. Surfaces shall be sequenced, and blueprint matched. Veneers not otherwise indicated shall be plain sliced. Backing veneers for concealed surfaces shall be of a species and thickness to balance the pull of the face veneers.

K. Hardwood plywood for painted surfaces shall conform to U.S. Product Standard PS -51-71, Type I, and shall have sound birch, maple or other approved close grain hardwood faces suitable for paint finish.

L. Plastic laminate surfaces shall be laminated with thermosetting decorative sheets in the color, pattern and style as selected by the Architect. Horizontal surfaces shall be laminated with sheets conforming to Federal Specifications L-P-508F, Style D, Type I (general purpose), Grade HP, Class I, 1/16" thick, satin finish with rough sanded backs. Vertical surfaces shall be laminated with sheets conforming to Federal Specification L-P-598F, Style D, Type II (vertical surface), Grade HP, Class I, conforming, satin finish, 1/32" thick or heavier. Balance sheets for backs in concealed locations shall be .020" thick laminate backing sheets conforming to Federal Specification L-P-00508E, Style ND, Type V (backing sheet), Grade HP.

M. Adhesive for application of plastic laminate to wood surfaces of counter tops shall be phonetic, resorcinol or melamine adhesive conforming to Federal Specification MMM-A-181C and producing a waterproof bond. Adhesive for applying plastic laminate to vertical surfaces shall be either a waterproof type or a water-resistant type such as a modified urea formaldehyde resin liquid glue conforming to Federal Specification MMM-A-188C. Contact adhesive will not be acceptable.

N. Plate glass shall be 1/2" thick safety glass with polished edges.

O. Sealant shall be equal to that manufactured by General Electric. Silicone construction 1200 sealant; in either clear or approved color to match surrounding surfaces.

P. Sound deadening material shall be equal to that manufactured by H.W. Mortell Co.,Kankakee, Illinois, and shall be sprayed by use of a mechanical device to a thickness of not less than 1/8" thick.

2.2 FINISHES

A. Paint and coatings shall be of an NSF approved type suitable for use in conjunction with food service equipment. Such paint or coating shall be durable, non-toxic, non-dusting, non-flaking and mildew resistant, shall comply with all governing regulations and shall be applied in accordance with the recommendations of the manufacturer.

B. All exterior, galvanized parts, exposed members of framework where specified to be painted shall be cleaned, properly primed with rust inhibiting primer, degreased, and finished with two (2) coats of epoxy-based grey hammertone paint, unless otherwise specified.

C. Stainless steel, where exposed, shall be polished to a #4 commercial finish. Where unexposed, finish shall be #2B. The grain of polishing shall run in the same direction wherever possible. Where surfaces are disturbed by the fabricating process, such surfaces shall be refinished to match adjacent undisturbed surfaces.

2.3 SHOP FABRICATED EQUIPMENT CONSTRUCTION

A. Leg stands for open base tables or dish tables shall be constructed of 1-5/8" dia. 16-gauge stainless steel tubing, with stringer and cross braces of the same material. Joints between legs

and cross braces shall be welded and ground smooth. Flattened ends on tube stretchers are not permitted. Mechanical fittings are also not permitted.

1. Stainless Steel Leg Sockets: Component Hardware Group, Inc. model A18-0206, or accepted equal; weld to underside of countertop framing or at bottom of enclosed cabinet unit and fastened with flush set screw locking device.

2. Sanitary Type Stainless Adjustable Foot: Component Hardware Group, Inc. model A10-0851, or accepted equal

B. Tabletops shall be 14-gauge stainless steel unless otherwise noted, with all shop seams and corners welded, ground smooth and polished. Tops of closed base fixtures shall be reinforced on the underside with a framework of 1-1/2" angles or 16-gauge stainless steel hat section; and on open pipe frames with a 4" channel at each pair of legs. The leg sockets shall be welded to this channel. The channel in turn stud welded to the top. Tops shall be reinforced so that there will be any noticeable deflection. Unless otherwise shown on the detail drawings, metal tops shall be turned down 2", and back at 15-degree angle, with 1-1/8" turn-under, except where adjacent to walls or other pieces of equipment. The wall side shall be turned up 10" and back 2" at a 45-degree angle. Ends of this splash are to be closed. Free corner of tops shall be spherical. All tops shall have 1/8" of sound-deadening material applied to the underside by use of spray equipment in an oven, smooth application for ease in cleaning.

C. Enclosed bases or cabinet bodies shall be of the material and gauge hereinafter specified. They shall be enclosed on the ends and sides as required. The bases shall be reinforced at the top with a framework of 1-1/2" x 1-1/2" x 1/8" stainless steel angles fully welded to the base with the stainless-steel angles 36” on center (maximum), with all corners of said framework mitered and fully welded. All vertical joints of the bases shall be fully welded, ground and polished. All free corners of enclosed bases or cabinet bodies and all corners against walls and other fixtures shall be square. In the case of fixtures fitting against or between walls, the bodies shall be set in 1" from the wall line, but the tops shall be extended back to the wall line to permit adjustment to wall irregularities. A flush fitting vertical trim strip (extension of the vertical end mullion without vertical seam of the same material as the body shall be provided at each end of the body and shall extend 1" to the wall line). These fixtures shall be constructed to set on bases or legs as hereinafter specified and shall be set in mastic in a vermin-proof manner.

D. Shelves, mullions and aprons shall be fabricated flush with the cabinet body, welded, ground, and polished. Butt joints are not acceptable.

E. Drawers, to be furnished with stainless steel flush pull, Component Hardware Group Inc., model number P63-1012 or equal installed into the 18-gauge double-pan drawer front panel.

1. Stainless steel locks, Component Hardware Group, Inc., model number P30-4781 or equal for each drawer. All drawers are to be keyed alike.

2. Stainless Steel full extension slides, Component Hardware Group, Inc., model no S52-0024 or equal NSF Approved. Provide two (2) per drawer. Slides to be installed so drawer will roll closed when released.

3. Stainless steel removable drawer pan, Component Hardware Group, Inc., model number, S81-1520 or equal one (1) per drawer set loosely in a channel frame so it can be easily lifted out for cleaning. This supporting frame shall be welded stainless steel channel.

4. Drawer face panel to be constructed of 18-gauge stainless steel double pan construction. (Single metal thickness drawer faces are not being expectable.)

F. Hinged doors in base cabinets shall be of double pan construction, insulated and constructed of 18-gauge stainless steel. Doors shall have wire type pull Component Hardware Group Inc., model number P46-1010 or equal installed as shown in elevations. Door pulls to be NSF and ADA compliant.

G. Interior shelves shall be solid, non-removable 16-gauge stainless steel, with ends and backs provided with a 1-1/2" high turn-up against the body of the fixture and welded to the same. Front edge is to be turned down 1-1/2" and under 1/2", at the bottom shelf, beyond the edge of the base to prevent sagging and vermin collection.

H. Under shelves on open tables shall be constructed of 16-gauge stainless steel, flanged down 90 degrees ½". The corners shall be welded to the legs. Under shelves shall be 10" from the floor. Backs shall be turned up 2".

I. Elevated shelves shall be constructed of 16 gauges stainless steel with edges turned down in a square edge, and back 1/8"; except where shelves are adjacent to walls or other fixtures, where they shall be turned up 2". Corners shall be spherical, mounted on 14-gauge stainless steel support brackets.

J. Sinks and drain boards shall be constructed of 14-gauge stainless steel. The working edge of the sink shall be provided with 5/8" radius sanitary rolled edge in one piece with rounded corners. The drain boards shall be made as an integral part of the sink; all vertical and horizontal corners shall be rounded with 5/8" radius; and the working front edges shall be maintained at one level, taking up the pitch of the drain boards by dropping the sink to allow for same. Depth of sink bowl shall be determined from the top bowl. Sinks shall be provided with back and end splashes with top edge flanged back 2-1/4" at 45-degree angle and attached to the building wall with "zee" clips. Splash back of sinks and drain boards shall be grained in the same direction. Suitable openings shall be cut for hot and cold-water supplies and waste outlets. All surface plumbing trim as called for on the drawings and herein specified shall be provided. Bottom of each sink bowl with center drain connection shall be fitted with a 2" lever type action waste valve mounted into the sink and made watertight. Sink bowls and drain boards shall have 1/8" of sound-deadening material underneath, spray-applied.

K. Rivets, bolts and screws shall not be permitted in any exposed location.

L. All welding shall be of the heliarc method with welding rod of the same composition as the parts welded. Welds shall be complete, strong, and ductile with excess metal ground off and joints finished smooth to match adjoining surfaces. Welds shall be free of mechanical imperfections and shall be continuously welded so that the fixture shall appear as one-piece construction. Butt welds made by spot solder and finished by grinding are not acceptable.

M. All exposed joints shall be ground flush with adjoining material and finished to harmonize therein. Whenever material has been sunk or depressed by welding operation, such depressions shall be suitably hammered and peened flush with the adjoining surface and, if necessary, again ground to eliminate low spots. In all cases, the grain of rough grinding shall be removed by successive fine polishing operations.

N. All exposed welded joints in stainless steel construction shall be suitably coated with an approved metallic-based paint.

O. After galvanized steel members have been welded, all welds and areas where galvanizing has been damaged shall have a zinc dust coating applied.

P. Seams shall be continuous welds flush and ground smooth.

1. Field Joints: Flush welded, ground smooth and polished on the job, solder or rivets not allowed.

2. Counter Tops: Field joints in stainless steel counter tops and drain boards butt welded with welds ground flush and smooth and polished to match original finish.

3. Pass windows: Provide a complete all welded seamless counter from inside area to the outside ledge at each pass window location. Mechanical joints, butt joints or lap joints will not be accepted.

2.4 ELECTRICAL REQUIREMENTS

A. Standard UL listed materials, devices and components shall be selected and installed in accordance with NEMA Standards and recommendations and as required for safe and efficient use and operation of the Food Service Equipment without objectionable noise, vibration, and sanitation problems.

B. Motors up to and including ½ HP are to be wired for 120-volt, single phase. Fixtures totaling more than 1000 watts are to be wired for 208-volt, single phase. Fixtures having multiple number of heating elements, can be wired for three phase with the load balanced as equally as possible within the fixture.

C. Heating elements having a connected load of up to and including 1000 watts are to be wired for 120-volt, single phase. Fixtures totaling more then 1000 watts are to be wired for 208-volt, single phase. Fixtures having multiple number of heating elements can be wired for three phase with the load balanced as equally as possible within the fixture.

D. Equipment where applicable shall be furnished with three-wire cord and plug.

2.5 PLUMBING TRIM, SINKS

A. All vegetable and pot washing sinks or other 14" deep sinks shall have Fisher Mfg. Co. Model 22209 series (2" drain size) quick opening drain. Fisher Mfg. Co. Model 60100 splash mounted faucet shall be mounted over each partition as shown on the drawings.

B. All cook sinks, pantry sinks, or other 10" or 12" deep sinks shall have Fisher Mfg. Co. Model 22209 series (2" drain size or as shown on the drawings) quick opening drain. Fisher Mfg Co. Model 57649 faucets mounted as shown on the drawings.

C. All Fisher Mfg., Co. faucets to be furnished as stainless steel to comply with AD1953 Standards and conform to NSF 61 Standard 9.

D. Provide gas pressure regulators for installation by the Plumbing Contractor.

E. FIRE SUPPRESSION GAS SHUT/OFF VALVE: Gas valve to be furnished by the Foodservice Equipment Contractor and furnished to the Plumbing Contractor for installation. Foodservice Equipment Contractor is to verify with plumbing division for gas line size. Valve to be located in an accessible location and if necessary with access panel.

2.6 HARDWARE

A. Elevated shelf brackets shall be as shown on the Drawings.

B. Drawer and door handles shall be as shown on the Drawings.

C. Hinges for all metal doors shall be Klein Hardware Co. 7870 series, finished in satin chrome.

PART 3 INSTALLATION

3.1 POSITIONING OF EQUIPMENT

A. Installation procedure, details and scheduling shall be so arranged that the work of other contractors may progress without unnecessary delay, interference or damage.

B. The Contractor shall do all fitting, joining, fastening, scribing, caulking and adjusting necessary to install any fixed item of equipment in its designated location; and shall locate and/or store portable, non-fixed items as directed by the Architect and/or Consultant with due regard for the security and protection from damage of the items involved.

3.2 WORKMANSHIP

A. Commencement of work shall constitute agreement with and acceptance of all conditions as found.

B. Equipment shall be installed as shown on the plans. Where abutting, curved or irregularly shaped angles or projecting corners of walls occur, equipment shall be made to conform. Where several pieces of equipment are to be assembled in a group, the group shall be complete as whole, with all necessary filler or connecting pieces as may be required to make a complete, sanitary and vermin-proof group.

C. Welded parts shall be non-porous and free of imperfections. Welds on galvanized metal shall be ground smooth, sandblasted and sprayed with molten zinc or 1200 degrees F to a thickness of .004". Tinning of welds will not be acceptable. Welds of stainless steel shall be ground and polished to the original finish and all grained in the same direction.

D. All fixtures, unless made of stainless steel, shall be finished in sprayed lacquer in color as chosen by the architect; or if specifically stated, in “plastic laminate”; in pattern and/or color as selected by the Architect.

3.3 POST INSTALLATION PROCEDURES

A. Prior to being offered for final acceptance, all equipment shall be thoroughly cleaned. This shall include removal of all stains, paint spots, protective wrapping and coatings, tapes, grease, oil, plaster, dust, polishing compounds, etc. and cleaning of floors in food service areas (broom clean) and signed off by the General Contractor with a copy to the Architect and/or Consultant.

B. After installation at least ten (10) days prior to offering for acceptance, all equipment shall undergo a "Start-up" procedure by a Factory Authorized service dealer. Equipment is to be inspected, tested, calibrated and adjusted for normal operation conditions. If inspection or testing indicated defects, such defects shall be corrected, and the inspection and test repeated to insure a perfect operation of all equipment, prior to final acceptance and for a period ninety day after final acceptance.

C. Upon completion of the project, the Contractor shall furnish the Owner two (2) sets of dimensional prints, data sheets, spare parts lists and operating manuals for each piece of mechanical equipment; each set shall be neatly bound in a loose-leaf binder, each set shall be complete with and index of equipment and with a complete list of service contracts with said agencies to perform these services. In addition to this list. The contractor shall submit for review of the Architect and/or Contractor and submittal to the Owner for his files, copies of service contracts with said agencies to perform these services. It shall be the responsibility of this contractor to fill out forward and all warranty forms as required.

D. This contractor shall arrange demonstrations of the operation and maintenance of all buy-out" equipment by competent instructors. These demonstrations to take place within ten (10) days prior to the acceptance of the kitchen. All instruction periods shall be scheduled with the Architect and/or Consultant fourteen (14) days prior to commencement of same, and at times convenient to the Architect and/or consultant and Owner.

PART 4 ITEMIZED EQUIPMENT SCHEDULE

4. 1 FOOD SERVICE EQUIPMENT LIST AND DESCRIPTION

A. Fabricated Equipment: Wherever the term "Fabricated Assembly" is used within the list noted below and description of Food Service Equipment, it shall be presumed to be followed by the phrase, "constructed to the configuration, dimension, detail and design as shown on the drawings and specifications and with workmanship and materials as specified above" and shall meet the fabrication detail requirements of the latest edition of the Sheet Metal and Air Conditioning Contractors National Association (SMACNA), and National Sanitation Foundation (NSF Standard 2).

B. All food service equipment shall be installed per the "Guidelines for Seismic Restraints of Kitchen Equipment" by the Sheet Metal and Air Conditioning Contractors National Association (SMACNA).

C. All food service equipment shall comply with the standards of The California Code of Regulations, Title 24, Part No. 2.

D. All food service equipment shall comply with the current California Energy Commission Appliance Efficiency Regulations.

E. Equipment in the following schedule is listed by Item Numbers shown on Drawings.

F. Equipment listed is schedule as (OFCI) means Owner Furnished Contractor Installed.

1. SCHEDULED ITEMS:

ITEM #1 AIR CURTAIN
Quantity: One (1)
Manufacturer: Berner (or equal)
Model: SLC07-1036A-BK
Status: OFCI
This item is owner furnished contractor installed. Contractor to verify utility and installation requirements. Equipment vendor to verify equipment configurations with the DSA approved drawings.
Sanitation Series Low Profile Air Curtain, 36"L, unheated, (1) 1/5 hp motor, for doors up to 7' high, aluminized steel cabinet, baked-on electrostatic black powdered coated aluminum steel cabinet, interior or exterior mounting, UL, cULus, UL EPH, MADE IN USA

Accessories:
1 ea. Five year parts warranty (unheated units)
1 ea. Model A 120v/60/1-ph
1 ea. Model 9503SD020-P Automatic Door Switch, plunger type, activates air door when door opens, single phase only & max. amp draw of 20 amps, 120-240V
1 ea. Black powder coat exterior finish standard

ITEM #2 HAND SINK
Quantity: One (1)

Manufacturer: Eagle Group (or equal)
Model: HSAP-14-ADA-FW
Status: OFCI
This item is owner furnished contractor installed. Contractor to verify utility and installation requirements. Equipment vendor to verify equipment configurations with the DSA approved drawings.
Hand Sink, wall mount, 14" wide x 16" front-to-back x 5" deep bowl, 16/304 stainless steel construction, splash mount gooseneck faucet with wrist handles & mixer valve, marine edge on front & sides, 1/2" NPS water inlet, chrome-plated P-trap, wrist handles, soap dispenser, basket drain, skirt assembly & paper towel dispenser, PHYSICALLY CHALLENGED, NSF

Accessories:

1 ea. Model 313305 T&S Extra Heavy Duty Gooseneck Faucet, wrist handles, splash mount 4" OC, NSF
1 ea. Model -LRS Left & right side splashes

ITEM #3 PREPARATION SINK
Quantity: One (1)
Manufacturer: American Stainless-Steel Corp. (or equal)
Model: FABRICATED ITEM
Status: OFCI
This item is owner furnished contractor installed. Contractor to verify utility and installation requirements. Equipment vendor to verify equipment configurations with the DSA approved drawings.
Fabricated assembly in length and configuration as shown on the drawings and shall include the following:

A. Work area top to be 14-gauge stainless steel with a 14-gauge stainless steel backsplash at back 2" thick with a 45-degree top edge to wall, turn down ½" at back and right side. Top to be constructed with a 2” turn down on 2 sides as shown. Drainboards are to slope per NSF guidelines to sink.
B. One (1) 14-gauge stainless steel formed and welded sinks, refer to drawings for bowl dimensional requirements. (Diecast sink bowls are not acceptable).
C. Legs to be 16-gauge stainless steel tubular, stainless steel welded leg sockets, stainless steel seismic flanged feet and stainless-steel cross rail bracing. Provide 16-gauge stainless steel undershelf as shown.
D. Approximate size: 30" deep x as shown.
E. Twist waste valve to have support bracket installed as part of fabrication with a minimum of 4” clearance from twist handle.

Accessories:

1 ea. Fisher Model 57657 Faucet, deck mount, 8" centers, 10" swing spout, lever handles with color coded indexes, 1/2" male inlets, stainless steel, ADA Compliant
1 ea. Fisher Model 22209 DrainKing Waste Valve, with flat strainer, 12 GPM drain rate, dual Teflon seals, stainless steel ball, cast red brass body
1 ea. Fisher 5-year warranty against defects in materials or workmanship, standard
2 ea. Fisher Model 5000-2103 Close Elbow, 3/4" female, rough chrome

ITEM #4 WALL MOUNTED SHELF
Quantity: One (1)
Manufacturer: Custom
Model: American Stainless-Steel Corp. (or equal)
Status: OFCI
This item is owner furnished contractor installed. Contractor to verify utility and installation requirements. Equipment vendor to verify equipment configurations with the DSA approved drawings.
Fabricated assembly in length and configuration as shown on the drawings and shall include the following: To be fabricated of 16-gauge stainless steel body and shelves. Furnish with hinged doors and as shown on the drawings.

A. To be 304 16-gauge stainless steel construction, 1 1/2" turn down in front and 2" turn up at back and right end and left ends. Provide 14-gauge stainless steel wall brackets as shown. Shelf to be stud welded with cap nuts (2) ea at each shelf bracket silicone shelf to brackets will not be allowed for attachment.
B. Approximate Size: (1) ea. 12" deep x length as shown.

ITEM #4.1 OVERSHELF WITH POT RACK
Quantity: One (1)
Manufacturer: Advance Tabco
Model: PS-15-36
Status: OFCI
This item owner furnished contractor installed. Contractor to verify/provide backing locations/requirements.

Accessories
1. Model PS-15-36 Shelf with Pot Rack, wall-mounted, 36"W x 15"D, 18/430 stainless steel shelf, 2" x 1/4" stainless steel pot rack, includes: (6) plated double pot hooks, NSF

ITEM #5 SINK, (3) THREE COMPARTMENT
Quantity: One (1)
Manufacturer: American Stainless-Steel Corp. (or equal)
Model: FABRICATED ITEM
Status: OFCI
This item is owner furnished contractor installed. Contractor to verify utility and installation requirements. Equipment vendor to verify equipment configurations with the DSA approved drawings.
Fabricated assembly in length and configuration as shown on the drawings and shall include the following:

A. Work area top to be 14-gauge stainless steel with a 14-gauge stainless steel backsplash at back 2" thick with a 45-degree top edge to wall, turn down ½" at back and right side to Z-clips. Top to be constructed with a rolled edge as shown. Drainboards are to slope per NSF guidelines to sinks.
B. Three (3) 14-gauge stainless steel formed and welded integral sinks, refer to drawings for bowl dimensional requirements. (Diecast sink bows are not acceptable).
C. Provide and install 16-gauge stainless steel tubular legs, stainless steel welded leg sockets, and stainless-steel cross rail bracing.
D. Provide 16-gauge stainless steel undershelf with 1 ½" turn down at front and 2" turn up at back.
E. Provide adjustable seismic flanged feet. Refer to drawings for configuration and quantity.
F. Twist waste valve to have support bracket installed as part of fabrication with a minimum of 4" clearance from twist handle.

Accessories:
3 ea. Fisher Model 22209 DrainKing Waste Valve, with flat strainer, 12 GPM drain rate, dual Teflon seals, stainless steel ball, cast red brass body
2 ea. Fisher Model 60100 Faucet, 3/4", 8" backsplash, with 10" swing spout & elbows, stainless steel
4 ea. Fisher Model 5000-2103 Close Elbow, 3/4" female, rough chrome

ITEM #6 PRE-RINSE FAUCET ASSEMBLY
Quantity: One (1)
Manufacturer: Fisher (or equal)
Model: 13390
Status: OFCI
This item is owner furnished contractor installed. Contractor to verify utility and installation requirements.

Equipment vendor to verify equipment configurations with the DSA approved drawings.
Pre-Rinse Unit, spring style, backsplash mount, 8" centers, 21" riser, 36" hose, 1.15 GPM Ultra-Spray™ PLUS spray valve with built-in spray handle clip & dish guard bumper, lever handles with color coded indexes, includes wall bracket, 1/2" NPT male inlets, brass, ADA Compliant

Accessories:

1 ea. Model 64211 Elbows, (2) 1/2", brass

ITEM #7 DOUBLE STACK COMBI OVEN, GAS

Quantity: Two (2)
Manufacturer: RATIONAL (or equal)
Model: ICP 6-FULL/6-FULL NG 208/240V 1 PH
Status: OFCI
This item is owner furnished contractor installed. Contractor to verify utility and installation requirements.
Equipment vendor to verify equipment configurations with the DSA approved drawings.
Two (2) (CC1GRRA.0000238) iCombi Pro® 6-Full Size Combi Ovens, double stack, natural gas, (12) 18" x 26" sheet pan or (24) 12" x 20" steam pan or (12) 2/1 GN pan capacity, (6) stainless steel grids included, intelligent cooking system with (4) assistants; iDensityControl, iCookingSuite, iProductionManager, & iCareSystem, (6) operating modes, (5) cooking methods, (3) manual operating modes, 85° to 572°F temperature range, quick clean, care control, eco mode, 6-point core temperature probe, retractable hand shower, Ethernet interface, Wi-Fi enabled, includes: (2) buckets of Active Green Cleaner, & (2) buckets of Care Tabs, 106,500 BTU each, 208/240v/60/1-ph, 6 ft. cord, 0.9 kW each, IPX5, cCSAus, NSF, ENERGY STAR-®

Accessories:

1ea. Model 60.75.752 Combi-Duo Universal Stacking Kit, for iCombi 6-half size or 6-full size (electric or gas) on iCombi 6-full size (gas only)
1 ea. Model 60.31.205 Stand I Stationary Oven Stand for Combi-Duo (MarineLine), 7-3/4"H, open sides, with fixing mount, for iCombi 6-full size on 6-full size
1 ea. 2 years parts and labor, 5 years steam generator warranty
1 ea. Model 1900.1150US Water Filtration Double Cartridge System, for full-size Combi-Duos or if used for more than (2) units, includes: (1) double head with pressure gauge, (2) R95H filter & (1) filter installation kit (for each additional unit add (1) additional head & additional cartridge. Maximum (4) cartridges)
1 ea. NOTE: The RATIONAL Water Filtration Systems helps provide consistent high quality water to your RATIONAL cooking systems. The patented carbon block technology reduces the effects of sediment, chloramines and chlorine while providing the required flow rates
4 ea. Provide seismic flanged feet.
4 ea. Provide drain water tempering kit one (1) per drain line.

ITEM #8 EXHAUST HOOD AND S/S WALL LINING

Quantity: One (1)
Manufacturer: CAPTIVE AIRE (or equal)
Model: 6024-ND-2-PSP-F
Status: CFCI
To be stainless steel type I exhaust hood. Hood to be 18-gauge stainless steel with removable Captrate Solo Filter cartridges. See drawings for dimensions. The exhaust hood is to have 3" air space at back. Provide 200-watt lights pre-wired to one (1) point of connection as the configuration is shown on the drawings. Provide Hood and all accessories as shown on the drawings.

A. 18-gauge stainless steel wall panels (minimum length to be 36”) per California Mechanical Code Chapter 5. Wall lining to be applied with Dow Corning #995 adhesive. "Liquid Nails" are not acceptable.
B. Wall panels shall be installed horizontally and fluted vertically every 6” from top of floor base to bottom lip of the hood

C. Wall lining shall be installed without exposed screws and bolts.
D. Provide stainless steel “tees” and/or “ells” at each panel on both sides, bottom and top.
E. The stainless-steel wall lining shall extend the full length of the exhaust hood Item including the fire system cabinet on the end of the hood.
F. Insulated wall lining shall meet the requirements of NFPA-96 and all local codes and ordinances.
G. Provide 18-gauge stainless steel closure skirting from top of the hood to finish ceiling.
H. Provide all hanging information to the Contractor including the total weight of the hood.
I. Furnish all necessary materials to support this assembly from the building structure. Assembly shall meet the requirements of NFPA-96 and the latest edition of the California Mechanical Code.
J. 18-gauge stainless steel wall lining with a 1-inch mineral wool blanket and wire mesh backing or ceramic fiber and backing spaced out 1-inch on non-combustible spacers per California Mechanical Code 2019 Chapter 5.
K. Current exhaust hood configuration, DCV set up to provide 0-10v speed signal and does not include VFDs for the fans. Refer to foodservice equipment exhaust hood details.

ITEM #8.1 FIRE SYSTEM
Quantity: One (1)
Manufacturer: CAPTIVE AIRE / ANSUL
Model: R-102
Status: CFCI
Equipment configuration with the DSA approved drawings.
Complete with a stainless-steel control panel, remote pull station, all shut/down electric contractors. This assembly to be in compliance with NFPA 96 and UL-300.

A. All exposed piping, fittings, nozzles, and trim shall be stainless steel or chrome plated finish.
B. All conduit piping and boxes are to be concealed in the building wall or ventilator. Verify with contractors to coordinate installation in the wall areas.
C. Furnish a mechanical gas shut-off valve of proper size to the Plumbing Contractor for installation. Verify with Electrical Contractor what type of electrical panel will be furnished, either for shunt trips or contactors, and provide all necessary information regarding the inter-lock conduit and wiring between this electrical panel and the fire suppression panel. This electrical work and all material to be supplied by the Electrical Contractor.
D. Coordinate with the hood manufacturer to supply the proper access into the hood area for the fire suppression linkage and nozzle locations.
E. Before installation of the fire suppression system is started, approved drawings and fitting lists must be approved by the Office of Regulation Services. Once the installation is completed a field test must be performed in the presence of the inspecting authority.

ITEM #9 HAND SINK
Quantity: One (1)
Manufacturer: Advance Tabco (or equal)
Model: 7-PS-68
Status: OFCI
This item is owner furnished contractor installed. Contractor to verify utility and installation requirements.
Equipment vendor to verify equipment configurations with the DSA approved drawings.
Hand Sink, wall mounted, 14" wide x 10" front-to-back x 5" deep bowl, 20 gauge 304 stainless steel, with splash mounted gooseneck faucet with wrist blades, basket drain, wall bracket, NSF, cCSAus.

Accessories:
1 ea. Model 7-PS-10 P-trap, heavy duty, 1-1/2", 17 gauge
1 ea. Model 7-PS-17 Welded Side Splash, 7-3/4"H (installed height), both sides, for hand sinks with 14" wide x 10" front-to-back bowl, splash mounted faucets

ITEM #10 RANGE, 36", 6 OPEN BURNERS

Quantity: One (1)
Manufacturer: Garland/US Range (or equal)
Model: GFE36-6R
Status: OFCI
This item is owner furnished contractor installed. Contractor to verify utility and installation requirements. Equipment vendor to verify equipment configurations with the DSA approved drawings.
Starfire Pro Series Restaurant Range, gas, 36", (6) 26,000 BTU open burners, electric pilot ignition, cast iron top & ring grates, standard oven, includes (1) rack & 3 position rack guides, stainless steel front, sides, plate rail and 10" low profile back guard, 6" stainless steel legs with adjustable feet, 194,000 BTU, CSA Flame, CSA Star, cCSAus, CE, NSF (Garland)

Accessories:

1 ea. One year limited parts and labor warranty, covers products purchased and installed in the USA only, standard
1 ea. Gas type to be specified
1 ea. (Electronic ignition) 115v/60/1-ph, 0.1 amps, NEMA 5-15P, standard
1 ea. 10" Low-Profile stainless steel backguard standard
1 ea. Model PFLGRR Deck fasteners / flanged feet (set of 4), for fastening unit to the floor

ITEM #11 SPARE

ITEM #12 SPARE

ITEM #13 SPARE

ITEM #14 MOBILE HEATED CABINET
Quantity: Two (2)
Manufacturer: Cres Cor (or equal)
Model: H-137-SUA-12D
Status: OFCI
This item is owner furnished contractor installed. Contractor to verify utility and installation requirements. Equipment vendor to verify equipment configurations with the DSA approved drawings.
Cabinet, Mobile Heated, insulated, top-mount heater assembly, recessed push/pull handles, magnetic latch, (12) sets chrome plated wire universal angle slides for 12" x 20" thru 18" x 26" pans on 4-1/2" centers, adjustable 1-1/2" centers, reversible dutch doors, (4) heavy duty 5" swivel casters (2) braked, anti-microbial latches, stainless steel construction, NSF, cCSAus, ENERGY STAR®

Accessories:

1 ea. Standard Warranty: 1 year labor with 3 year parts warranty
1 ea. 120v/60/1-ph, 1.5 kW, 12.0 amp, 10 ft power cord, NEMA 5-15P, standard
1 ea. Right-hand door swing (top & bottom doors), standard
1 ea. Tempered glass window, per door (2 required)
1 ea. Model 1056 002 Corner Bumpers, add 2" to OA dimensions, non-marking, gray
1 ea. 6" casters, set of 4

ITEM 15 MOBILE WORKTABLE WITH UTENSIL DRAWER
Quantity: Two (2)
Manufacturer: American Stainless-Steel Corp. (or equal)
Model: FABRICATED ITEM
Status: OFCI
This item is owner furnished contractor installed. Contractor to verify utility and installation requirements. Equipment vendor to verify equipment configurations with the DSA approved drawings.

Fabricated assembly in length and configuration as shown on the drawings and shall include the following:

A. Work area top to be 14-gauge stainless steel with 2" turn down on all four sides.
B. Provide and install 16-gauge stainless steel tubular legs, stainless steel welded leg sockets, and fully welded stainless-steel cross rail bracing. Provide 16-gauge stainless steel undershelf as shown.
C. Provide swivel expanding stem casters Component Hardware Group, Inc. (4) ea. Model CMS4-4GBN brake model.
D. Provide (3) ea. utensil drawer Component Hardware Group, Inc. Model S90-0020N drawer mounted to the underside of mobile worktable Item No. 15. Provide all necessary hardware mounting angles etc. for a complete installation. Slides to be installed so drawer will roll closed when released.
E.

ITEM #16 DRY STORAGE SHELVING
Quantity: 7 (7)
Manufacturer: Metro (or equal)
Model: A2448NC
Status: OFCI
This item is owner furnished contractor installed. Contractor to verify utility and installation requirements. Equipment vendor to verify equipment configurations with the DSA approved drawings.
Super Adjustable Super Erecta® Shelf, wire, 48"W x 24"D, chrome plated finish, corner release system, NSF. Shelving to be 4-tier units with the bottom shelf at a minimum of 12" above finished floor. Provide post clamps to adjacent shelving unit two at front and two at back. Provide wall mounting angle brackets at top of shelving as shown. Provide "S' hooks where shelving comes together at 90 degrees delete inside post all locations inside corners.

Accessories:
28 ea. 64P - 64-1/2"H, adjustable leveling bolt, posts are grooved at 1" increments & numbered at 2" increments, double grooved every 8" chrome finish
8 ea. 9995Z- Super Erecta® "S"Hook, zinc
8 ea. 9994Z- Super Erecta® Post Clamp, zinc
28 ea. SAFP- Seismic Threaded Foot Plate Kit, (4) foot plates each with a single anchor hole. Zinc plated finish, for use with staked 1" Round Posts, Spec Sheet 10.16,

ITEM #16.1 DRY STORAGE SHELVING
Quantity: One (1)
Manufacturer: Metro (or equal)
Model: A2436NC
Status: OFCI
This item is owner furnished contractor installed. Contractor to verify utility and installation requirements. Equipment vendor to verify equipment configurations with the DSA approved drawings.
Super Adjustable Super Erecta® Shelf, wire, 36"W x 24"D, chrome plated finish, corner release system, NSF. Shelving to be 4-tier units with the bottom shelf at a minimum of 12" above finished floor. Provide post clamps to adjacent shelving unit two at front and two at back. Provide wall mounting angle brackets at top of shelving as shown. Provide "S' hooks where shelving comes together at 90 degrees delete inside post all locations inside corners.

Accessories:
28 ea. 64P - 64-1/2"H, adjustable leveling bolt, posts are grooved at 1" increments & numbered at 2" increments, double grooved every 8" chrome finish
8 ea. 9995Z- Super Erecta® "S"Hook, zinc
8 ea. 9994Z- Super Erecta® Post Clamp, zinc
28 ea. SAFP- Seismic Threaded Foot Plate Kit, (4) foot plates each with a single anchor hole. Zinc plated finish, for use with staked 1" Round Posts, Spec Sheet 10.16,

ITEM #18 WALK-IN FREEZER
Quantity: One (1)
Manufacturer: RMI-Econocold (or equal)
Model: FABRICATED ITEM
Status: CFCI

Assembly shall consist of one (1) refrigerator compartment; Wide x 8'-0" high clear interior dimensions Equipment vendor to verify equipment configurations with the DSA approved drawings.
(see drawings for dimensions and configuration). Assembly to form the configuration as shown on the drawings. Assembly shall be furnished as herein specified. And as prepared by RMI.

1. Assemblies shall be N.S.F (Standard 7) approved and formed in the configuration as shown on the contract drawings. Assemblies shall meet California Code of Regulations Title 20 Sections 11601 through 1608 dated July 2006 Appliance Efficiency Regulations.

2. Panel Construction: Shall consist of exterior and interior die-formed metal panels formed to ensure proper size. Section edges must have lineup pines and double row of closed-cell gaskets to insure panel alignment and proper seal at each joint. Corner panels to be 90-degree angles 12 inches in each direction. (No Wood Construction will be accepted).

3. Insulation: Walls and Ceiling 4" of "foamed-in-place" urethane insulation shall be used with thermal conductivity of not more than 0.118 BTU per hour per square foot. U Factor shall not exceed 0.030. The insulation shall be rated self-extinguishing and fire-retardant type as specified by UL. Insulation must remain stable at temperatures up to 260ºF. Floor to be same as above except Heavy-Duty reinforced for cart storage capable to withstand 500-pound point load with no deflection.

4. Section Fasteners: All wall, floor and ceiling section joints shall be fastened together with steel cam-action speed locks. These fasteners shall not exceed a 46" on center spacing. All locks shall be actuated from inside with a standard hex type Allen wrench. All socket ports shall be finished off with a ½" diameter snap cover to match the color of the panels.

5. Hinged Walk-In Doors: Door shall be installed as shown on the drawings. Door shall be urethane insulated, flush-in fitting type 42" wide x 80" high (as shown on the drawings) with triple-pane 1/4" thick plate glass view windows (freezer heated). Each door shall be furnished with a door heater switch and mortise-style lock. Door finish to be 20-gauge stainless steel inside and out. Door and door section shall be listed by UL and equipped with the following:

    a. Magnetic gasket
    b. Door closer
    c. Polished chrome deadbolt latch and cam-lift spring-loaded hinges Latches shall have a safety release to prevent entrapment of personnel within the box. Latches also have padlocking provisions.
    d. Bottom of door shall have a double sweep gasket. Magnetic gasket shall be of a dart and ridge design that will allow for easy replacement by the end user without the use of any tools. The door jamb shall be constructed of a fully welded anodized aluminum rigid frame. The perimeter of the frame shall be no less than two inches wide to provide integral backing to accommodate all required hardware. Freezer door jambs shall also have a 120-volt jamb and threshold heater with a Snap-On easily removable stainless-steel channel and a heated pressure relief vent assembly listed by UL.
    e. Each entrance door shall be provided with a 3-way rocker light switch with an indicating pilot light exterior. All switches are pre-wired, and factory tested per UL.

f. A threshold shall be provided with the door section. Heater wire shall continue beneath the threshold (freezer) in a raceway.
g. A digital thermometer shall be included with each door section to indicate inside temperature.

6. Lights: Each door section shall be equipped with a flush-mounted constant burning pilot light and switch on exterior and interior factory wired to an interior LED Fixture Kason 1806. Each compartment shall be provided with ceiling mounted vapor proof LED light fixture with clear prismatic injection-molded polycarbonate diffuser Kason model 1810 or equal, see drawings for quantity. Light fixtures shall be factory wired to the light switch at the entrance door. Lighting level shall be a minimum of 10-foot candles measured 30" off the finished floor.

7. Finish: Finished: Exterior wall panels, exposed to kitchen shall be 22-gauge stainless steel finish. Ceiling panels and door panels shall be a minimum of .026 galvanized steel with baked enamel embossed white finish and where concealed shall be .026" galvanized steel. Interior wall and ceiling panels shall be .026" galvanized steel and finished in baked enamel embossed white finish. Interior kitchen finish floor to meet interior floor panel of walk-in at same elevation for an even transition into walk-in. Contractor to verify finished floor thickness and provide anti-slip surface. Contractor to verify finished floor thickness.

8. Accessories: Assembly shall be provided with the following accessories.

a. Door hinges: (3) per door, self-closing and chrome-plated Kason No.1256 Cam-Lift.
b. Door Pulls: Chrome plated Kason No. 1229C with inside safety release.
c. Door Closure: Kason No. 1094.
d. Trim Molding: Where unit abuts the building wall they shall be trimmed with a closure strip to match the exterior walk-in wall finish. Provide removable "drop-in" closure panels at ceiling. Provide vertical closure strips at all building wall junctures.
e. Each compartment shall be provided with a high-temperature alarm system, Modular Corporation model No. 75 FLUSH mounted. This unit to be provided complete with built-in N/O & N/C dry contacts and pulse output for remote notification.
f. Dial Thermometer: Provide one (1) 4" dia. built into each walk-in door panel.
g. Pressure Relief Port: One (1) for each compartment Kason No. 1830 (heated at freezer only.
h. Strip Curtains: each walk-in door shall have polyester-reinforced clear vinyl strip curtains.
i. Entrance Doors: Each door shall have a 1/8" thick sheet aluminum diamond plate kick panel 3'-0" high on the exterior and interior door panels and adjacent door jambs.
j. The wall panels exposed to the kitchen shall have a 16-gauge stainless steel rub rail.
k. Provide a stainless-steel interior and exterior coved toe base.
l. Provide necessary backing in wall panel for the attachment
m. Floor to be heavy duty type to support cart traffic capable to withstand 500-pound point load with no deflection.

9. This assembly shall be installed by factory personal and or factory-approved installers with written certification provided by the manufacturer to the Architect and Consultant.

10. Walk-in assembly shall be installed into a recessed area as shown on the drawings. Contractor is to verify finishes and thickness of kitchen floor and allow for proper clearance at walk-in door.

ITEM #18.1 COLD STORAGE SHELVING
Quantity: Two (2)
Manufacturer: Metro (or equal)

Model: A2436NK3
Status: OFCI
This item is owner furnished contractor installed. Contractor to verify utility and installation requirements. Equipment vendor to verify equipment configurations with the DSA approved drawings.
Super Adjustable Super Erecta® Shelf, wire, 36"W x 24"D, Metroseal 3 (corrosion-resistant) finish, corner release system, with Microban® antimicrobial protection, NSF. Shelving to be 4-tier units with the bottom shelf at a minimum of 12" above finished floor. Provide post clamps to adjacent shelving unit two at front and two at back. Provide wall mounting angle brackets at top of shelving as shown. Provide "S' hooks where shelving comes together at 90 degrees delete inside post all locations inside corners.

Accessories:

8 ea. 64PK3 - 64-1/2"H, adjustable leveling bolt, posts are grooved at 1" increments & numbered at 2" increments, double grooved every 8" chrome finish
8 ea. 9995Z- Super Erecta® "S"Hook, zinc
8 ea. 9994Z- Super Erecta® Post Clamp, zinc
8 ea. SAFP- Seismic Threaded Foot Plate Kit, (4) foot plates each with a single anchor hole. Zinc plated finish, for use with staked 1" Round Posts, Spec Sheet 10.16,

ITEM #18.2 COLD STORAGE SHELVING
Quantity: Three (3)
Manufacturer: Metro (or equal)
Model: A2442NK3
Status: OFCI
This item is owner furnished contractor installed. Contractor to verify utility and installation requirements. Equipment vendor to verify equipment configurations with the DSA approved drawings.
Super Adjustable Super Erecta® Shelf, wire, 42"W x 24"D, Metroseal 3 (corrosion-resistant) finish, corner release system, with Microban® antimicrobial protection, NSF. Shelving to be 4-tier units with the bottom shelf at a minimum of 12" above finished floor. Provide post clamps to adjacent shelving unit two at front and two at back. Provide wall mounting angle brackets at top of shelving as shown. Provide "S' hooks where shelving comes together at 90 degrees delete inside post all locations inside corners.

Accessories:

12 ea. 64PK3 - 64-1/2"H, adjustable leveling bolt, posts are grooved at 1" increments & numbered at 2" increments, double grooved every 8" chrome finish
12 ea. 9995Z- Super Erecta® "S"Hook, zinc
12 ea. 9994Z- Super Erecta® Post Clamp, zinc
12 ea. SAFP- Seismic Threaded Foot Plate Kit, (4) foot plates each with a single anchor hole. Zinc plated finish, for use with staked 1" Round Posts, Spec Sheet 10.16,

ITEM #18.3 COLD STORAGE SHELVING
Quantity: Three (3)
Manufacturer: Metro (or equal)
Model: A2448NK3
Status: OFCI
This item is owner furnished contractor installed. Contractor to verify utility and installation requirements. Equipment vendor to verify equipment configurations with the DSA approved drawings.
Super Adjustable Super Erecta® Shelf, wire, 48"W x 24"D, Metroseal 3 (corrosion-resistant) finish, corner release system, with Microban® antimicrobial protection, NSF. Shelving to be 4-tier units with the bottom shelf at a minimum of 12" above finished floor. Provide post clamps to adjacent shelving unit two at front and two at back. Provide wall mounting angle brackets at top of shelving as shown. Provide "S' hooks where shelving comes together at 90 degrees delete inside post all locations inside corners.

Accessories:

12 ea. 64PK3 - 64-1/2"H, adjustable leveling bolt, posts are grooved at 1" increments & numbered at 2" increments, double grooved every 8" chrome finish
12 ea. 9995Z- Super Erecta® "S"Hook, zinc
12 ea. 9994Z- Super Erecta® Post Clamp, zinc

12 ea. SAFP- Seismic Threaded Foot Plate Kit, (4) foot plates each with a single anchor hole. Zinc plated finish, for use with staked 1" Round Posts, Spec Sheet 10.16,

ITEM #18.4 COLD STORAGE SHELVING
Quantity: One (1)
Manufacturer: Metro (or equal)
Model: A2460NK3
Status: OFCI
This item is owner furnished contractor installed. Contractor to verify utility and installation requirements. Equipment vendor to verify equipment configurations with the DSA approved drawings.
Super Adjustable Super Erecta® Shelf, wire, 60"W x 24"D, Metroseal 3 (corrosion-resistant) finish, corner release system, with Microban® antimicrobial protection, NSF. Shelving to be 4-tier units with the bottom shelf at a minimum of 12" above finished floor. Provide post clamps to adjacent shelving unit two at front and two at back. Provide wall mounting angle brackets at top of shelving as shown. Provide "S' hooks where shelving comes together at 90 degrees delete inside post all locations inside corners.

Accessories:

4 ea. 64PK3 - 64-1/2"H, adjustable leveling bolt, posts are grooved at 1" increments & numbered at 2" increments, double grooved every 8" chrome finish
4 ea. 9995Z- Super Erecta® "S"Hook, zinc
4 ea. 9994Z- Super Erecta® Post Clamp, zinc
4 ea. SAFP- Seismic Threaded Foot Plate Kit, (4) foot plates each with a single anchor hole. Zinc plated finish, for use with staked 1" Round Posts, Spec Sheet 10.16,

ITEM #19 WALK-IN REFRIGERATOR
Quantity: One (1)
Manufacturer: RMI-Econocold (or equal)
Model: FABRICATED ITEM
Status: CFCI

Assembly shall consist of one (1) refrigerator compartment; Wide x 8’-0” high clear interior dimensions (see drawings for dimensions and configuration). Assembly to form the configuration as shown on the drawings. Assembly shall be furnished as herein specified. And as prepared by RMI.

1. Assemblies shall be N.S.F (Standard 7) approved and formed in the configuration as shown on the contract drawings. Assemblies shall meet California Code of Regulations Title 20 Sections 11601 through 1608 dated July 2006 Appliance Efficiency Regulations.

2. Panel Construction: Shall consist of exterior and interior die-formed metal panels formed to ensure proper size. Section edges must have lineup pines and double row of closed-cell gaskets to insure panel alignment and proper seal at each joint. Corner panels to be 90-degree angles 12 inches in each direction. (No Wood Construction will be accepted).

3. Insulation: Walls and Ceiling 4" of “foamed-in-place” urethane insulation shall be used with thermal conductivity of not more than 0.118 BTU per hour per square foot. U Factor shall not exceed 0.030. The insulation shall be rated self-extinguishing and fire-retardant type as specified by UL. Insulation must remain stable at temperatures up to 260ºF. Floor to be same as above except Heavy-Duty reinforced for cart storage capable to withstand 500-pound point load with no deflection.

4. Section Fasteners: All wall, floor and ceiling section joints shall be fastened together with steel cam-action speed locks. These fasteners shall not exceed a 46" on center spacing. All locks shall be actuated from inside with a standard hex type Allen wrench. All socket ports shall be finished off with a ½" diameter snap cover to match the color of the panels.

5. Hinged Walk-In Doors: Door shall be installed as shown on the drawings. Door shall be urethane insulated, flush-in fitting type 42" wide x 80" high (as shown on the drawings) with triple-pane 1/4" thick plate glass view windows (freezer heated). Each door shall be furnished with a door heater switch and mortise-style lock. Door finish to be 20-gauge stainless steel inside and out. Door and door section shall be listed by UL and equipped with the following:

    a. Magnetic gasket
    b. Door closer
    c. Polished chrome deadbolt latch and cam-lift spring-loaded hinges Latches shall have a safety release to prevent entrapment of personnel within the box. Latches also have padlocking provisions.
    d. Bottom of door shall have a double sweep gasket. Magnetic gasket shall be of a dart and ridge design that will allow for easy replacement by the end user without the use of any tools. The door jamb shall be constructed of a fully welded anodized aluminum rigid frame. The perimeter of the frame shall be no less than two inches wide to provide integral backing to accommodate all required hardware. Freezer door jambs shall also have a 120-volt jamb and threshold heater with a Snap-On easily removable stainless-steel channel and a heated pressure relief vent assembly listed by UL.
    e. Each entrance door shall be provided with a 3-way rocker light switch with an indicating pilot light exterior. All switches are pre-wired, and factory tested per UL.
    f. A threshold shall be provided with the door section. Heater wire shall continue beneath the threshold (freezer) in a raceway.
    g. A digital thermometer shall be included with each door section to indicate inside temperature.

6. Lights: Each door section shall be equipped with a flush-mounted constant burning pilot light and switch on exterior and interior factory wired to an interior LED Fixture Kason 1806. Each compartment shall be provided with ceiling mounted vapor proof LED light fixture with clear prismatic injection-molded polycarbonate diffuser Kason model 1810 or equal, see drawings for quantity. Light fixtures shall be factory wired to the light switch at the entrance door. Lighting level shall be a minimum of 10-foot candles measured 30" off the finished floor.

7. Finish: Finished: Exterior wall panels, exposed to kitchen shall be 22-gauge stainless steel finish. Ceiling panels and door panels shall be a minimum of .026 galvanized steel with baked enamel embossed white finish and where concealed shall be .026" galvanized steel. Interior wall and ceiling panels shall be .026" galvanized steel and finished in baked enamel embossed white finish. Interior kitchen finish floor to meet interior floor panel of walk-in at same elevation for an even transition into walk-in. Contractor to verify finished floor thickness and provide anti-slip surface. Contractor to verify finished floor thickness.

8. Accessories: Assembly shall be provided with the following accessories.

    a. Door hinges: (3) per door, self-closing and chrome-plated Kason No.1256 Cam-Lift.
    b. Door Pulls: Chrome plated Kason No. 1229C with inside safety release.
    c. Door Closure: Kason No. 1094.
    d. Trim Molding: Where unit abuts the building wall they shall be trimmed with a closure strip to match the exterior walk-in wall finish. Provide removable “drop-in” closure panels at ceiling. Provide vertical closure strips at all building wall junctures.
    e. Each compartment shall be provided with a high-temperature alarm system, Modular Corporation model No. 75 FLUSH mounted. This unit to be provided complete with built-in N/O & N/C dry contacts and pulse output for remote notification.
    f. Dial Thermometer: Provide one (1) 4" dia. built into each walk-in door panel.
    g. Pressure Relief Port: One (1) for each compartment Kason No. 1830 (heated at freezer only.

h. Strip Curtains: each walk-in door shall have polyester-reinforced clear vinyl strip curtains.
i. Entrance Doors: Each door shall have a 1/8" thick sheet aluminum diamond plate kick panel 3'-0" high on the exterior and interior door panels and adjacent door jambs.
j. The wall panels exposed to the kitchen shall have a 16-gauge stainless steel rub rail.
k. Provide a stainless-steel interior and exterior coved toe base.
l. Provide necessary backing in wall panel for the attachment
m. Floor to be heavy duty type to support cart traffic capable to withstand 500-pound point load with no deflection.

9. This assembly shall be installed by factory personal and or factory-approved installers with written certification provided by the manufacturer to the Architect and Consultant.

10. Walk-in assembly shall be installed into a recessed area as shown on the drawings. Contractor is to verify finishes and thickness of kitchen floor and allow for proper clearance at walk-in door.

ITEM #19.1 COLD STORAGE SHELVING
Quantity: Four (4)
Manufacturer: Metro (or equal)
Model: A2448NK3
Status: OFCI
This item is owner furnished contractor installed. Contractor to verify utility and installation requirements. Equipment vendor to verify equipment configurations with the DSA approved drawings.
Super Adjustable Super Erecta® Shelf, wire, 48"W x 24"D, Metroseal 3 (corrosion-resistant) finish, corner release system, with Microban® antimicrobial protection, NSF. Shelving to be 4-tier units with the bottom shelf at a minimum of 12" above finished floor. Provide post clamps to adjacent shelving unit two at front and two at back. Provide wall mounting angle brackets at top of shelving as shown. Provide "S' hooks where shelving comes together at 90 degrees delete inside post all locations inside corners.

Accessories:
16 ea. 64PK3 - 64-1/2"H, adjustable leveling bolt, posts are grooved at 1" increments & numbered at 2" increments, double grooved every 8" chrome finish
16 ea. 9995Z- Super Erecta® "S"Hook, zinc
16 ea. 9994Z- Super Erecta® Post Clamp, zinc
16 ea. SAFP- Seismic Threaded Foot Plate Kit, (4) foot plates each with a single anchor hole. Zinc plated finish, for use with staked 1" Round Posts, Spec Sheet 10.16,

ITEM #19.2 COLD STORAGE SHELVING
Quantity: Two (2)
Manufacturer: Metro (or equal)
Model: A2436NK3
Status: OFCI
This item is owner furnished contractor installed. Contractor to verify utility and installation requirements. Equipment vendor to verify equipment configurations with the DSA approved drawings.
Super Adjustable Super Erecta® Shelf, wire, 36"W x 24"D, Metroseal 3 (corrosion-resistant) finish, corner release system, with Microban® antimicrobial protection, NSF. Shelving to be 4-tier units with the bottom shelf at a minimum of 12" above finished floor. Provide post clamps to adjacent shelving unit two at front and two at back. Provide wall mounting angle brackets at top of shelving as shown. Provide "S' hooks where shelving comes together at 90 degrees delete inside post all locations inside corners.

Accessories:
4 ea. 64PK3 - 64-1/2"H, adjustable leveling bolt, posts are grooved at 1" increments & numbered at 2" increments, double grooved every 8" chrome finish
4 ea. 9995Z- Super Erecta® "S"Hook, zinc
4 ea. 9994Z- Super Erecta® Post Clamp, zinc

4 ea. SAFP- Seismic Threaded Foot Plate Kit, (4) foot plates each with a single anchor hole. Zinc plated finish, for use with staked 1" Round Posts, Spec Sheet 10.16.

ITEM 20

ITEM #20.1 SERVING COUNTER UTILITY
Quantity: One (1)
Manufacturer: Duke Manufacturing (or equal)
Model: TST-60SS
Status: CFCI
Thurmaduke™ Solid Top Unit, Cold Food counter, 62.5"W x 38"D x 34"H, solid surface quartz composite type countertop on backer board, 20ga stainless steel body & undershelves, 5" dia. gray poly swivel casters & brakes, NSF
- Drop-in equipment to have stainless steel isolation trim ring in countertop for 20.1.1
- 8 ft. cord & plug
- Electric outlet, mounted in base, with stainless-steel cover, wired to existing power sources
- Controls to be in rail
- Stainless Steel end Shelf, 10" deep x 38" long, mounted to end of unit with hinged brackets
- Millwork style décor panel on customer & end
- Millwork style slotted hinged doors on open side with concealed hinges, and stainless-steel door pulls
- BGA Food Shield, 59-3/4"W x 29-3/8"D x 32-1/2"H, adjustable from full-service to self-service guard (both sides), single glass display shelf, LED lights, 3/8" glass over-shelf & guard with 1/4" glass wings (tempered and polished edges) CULus, UL EPH Classified

ITEM #20.1.1 COLD FOOD WELL UNIT, DROP-IN, REFRIGERATED
Quantity: One (1)
Manufacturer: Duke Manufacturing (or equal)
Model: CP3-SB-DC-D
Status: CFCI
Drop-In Cold Food Pan, refrigerated, 3/4" top recess, N7, 46-1/8"W x 25-1/2"D x 24-9/16"H, accommodates (3) up to 6" deep 12" x 20" pan, touchscreen control, 300 series stainless steel top with overhang & locking tabs, steel exterior housing, 1" brass drain & plug, R290, 120v/60, 5.2 amps, NEMA 5-15, UL EPH Classified, cULus,
- Condensate evaporator

ITEM #20A SERVING COUNTER, UTILITY
Quantity: One (1)
Manufacturer: Duke Manufacturing (or equal)
Model: TST-46SS
Status: CFCI
Thurmaduke™ Solid Top Unit, Hot/Frost counter, 46"W x 38"D x 34"H, solid surface quartz composite type extended countertop on backer board, 20ga stainless steel body & undershelves, 6" high stainless-steel legs with stainless steel on flanged feet, NSF
- **Drop-in equipment to have stainless steel isolation trim ring in countertop for 20A.1**
- **Cutting Board/Shelf, operator's side, 7"D, 18ga stainless steel shelf, with hinged brackets, mounted flush to countertop**
- **Controls to be in rail**
- **LED Lights under extended top**
- **Electric outlet, mounted in base, with stainless-steel cover, wired to existing power sources**
- **Wire Chase in base, stainless steel, removeable cover**
- **Stainless steel kick plate on customer's side & end, 1/2" above floor for easy rolling**
- **Millwork style décor panel on customer & end**
- **Millwork style slotted hinged doors on open side with recessed hinges**

3-Form panel 3/8-inches thick on customer side with stainless steel barrel stand-offs
Hinged louvered door on operator side with recessed handle
BGA Food Shield, 45-3/4"W x 19-1/4"D x 44-1/2"H, adjustable from full-service to self-service guard, dual glass display shelves, LED lights, 3/8" glass over-shelf & guard with 1/4" glass wings (tempered and polished edges) CULus, UL EPH Classified

ITEM #20B SERVING COUNTER, UTILITY
Quantity: One (1)
Manufacturer: Duke Manufacturing (or equal)
Model: TST-46SS
Status: CFCI
Thurmaduke™ Solid Top Unit, mobile utility counter, 46"W x 38"D x 34"H, solid surface quartz composite type extended countertop on backer board, 20ga stainless steel body & undershelves, 6" high stainless-steel legs with stainless steel flanged feet, NSF

Drop-in equipment to have stainless steel isolation trim ring in countertop for 20B.1
Cutting Board/Shelf, operator's side, 7"D, 18ga stainless steel shelf, with hinged brackets, mounted flush to countertop
Controls to be in rail
LED Lights under extended top
Electric outlet, mounted in base, with stainless-steel cover, wired to existing power sources
Wire Chase in base, stainless steel, removeable cover
Stainless steel kick plate on customer's side & end, 1/2" above floor for easy rolling
Millwork style décor panel on customer & end
Millwork style slotted hinged doors on open side with recessed hinges
3-Form panel 3/8-inches thick on customer side with stainless steel barrel stand-offs
Hinged louvered door on operator side with recessed handle
BGA Food Shield, 45-3/4"W x 19-1/4"D x 44-1/2"H, adjustable from full-service to self-service guard, glass display shelves, dual shelf, LED lights, 3/8" glass over-shelf & guard with 1/4" glass wings (tempered and polished edges) CULus, UL EPH Classified

ITEM #20B.1 HOT / COLD SHELF
Quantity: One (1)
Manufacturer: Custom/ Duke (or equal)
Model: DE-RHF1-SL-HFO1-SL
Status: CFCI
Recessed Hot Frost, Hot/Cold switchable slimline drop-in unit, 29"W x 21" D, fits (1) 18 x 26" pan per shelf. Dukes easy to use, easy to learn, programmable color touch screen control, stainless steel body and shelves, self-contained refrigeration, 120 volt/60/1 phase, 7.0 Amps, NEMA 5-15P

Duke HF1-OS over shelf Hot Frost, Hot/Cold switchable over shelf, 29"W x 21" D, fits (1) 18 x 26" pan per shelf. Dukes easy to use, easy to learn, programmable color touch screen control, stainless steel body and shelves, self-contained refrigeration, 120 volt/60/1 phase, 8.0 Amps, NEMA 5-15P.

ITEM #21A SERVING COUNTER, UTILITY
Quantity: One (1)
Manufacturer: Duke Manufacturing (or equal)
Model: TST-46SS
Status: CFCI

Thurmaduke™ Solid Top Unit, Hot/Cold/Freeze counter, 46"W x 38"D x 34"H, solid surface quartz composite type extended countertop on backer board, 20ga stainless steel body & undershelves, 6" high stainless-steel legs with stainless steel on flanged feet, NSF

- **Drop-in equipment to have stainless steel isolation trim ring in countertop for 21A.1**
- **Cutting Board/Shelf, operator's side, 7"D, 18ga stainless steel shelf, with hinged brackets, mounted flush to countertop**
- **Controls to be in rail**
- **LED Lights under extended top**
- **Electric outlet, mounted in base, with stainless-steel cover, wired to existing power sources**
- **Wire Chase in base, stainless steel, removeable cover**
- **Stainless steel kick plate on customer's side, 1/2" above floor for easy rolling**
- **Millwork style décor panel on customer**
- **3-Form panel 3/8-inches thick on customer side with stainless steel barrel stand-offs**
- **Hinged louvered door on operator side with recessed handle**
- **Fill Faucet on operators left with Expression style drain handle extended forward towards operator side**
- **Hose bibb connection and high temp hose**
- **BGA Food Shield, 45-3/4"W x 19-1/4"D x 32-1/2"H, adjustable from full-service to self-service guard, glass display shelf, single shelf, LED lights, 3/8" glass over-shelf & guard with 1/4" glass wings (tempered and polished edges) CULus, UL EPH Classified**

ITEM #21A.1 HOT / COLD FOOD WELL UNIT, DROP-IN, ELECTRIC
Quantity: One (1)
Manufacturer: Duke Manufacturing (or equal)
Model: HCF-2
Status: CFCI
Hot/Cold/Freeze Drop-In Food Well Unit, 33-3/16"W x 25-1/2"D x 25-13/16"H, flush mount pans, (2) 12" x 20" individual pan, individual wired remote digital controls for hot or cold operation, individual drain, 10 ft. cord & plug, 120v/60/1-ph, 10.7 amps, NEMA 5-15P cULus, UL EPH Classified

ITEM #21B SERVING COUNTER, UTILITY
Quantity: One (1)
Manufacturer: Duke Manufacturing (or equal)
Model: TST-46SS
Status: CFCI
Thurmaduke™ Solid Top Unit, mobile utility counter, 46"W x 38"D x 34"H, solid surface quartz composite type extended countertop on backer board, 20ga stainless steel body & undershelves, 6" high stainless-steel legs with stainless steel on flanged feet, NSF

- **Drop-in equipment to have stainless steel isolation trim ring in countertop for 21B.1**
- **Cutting Board/Shelf, operator's side, 7"D, 18ga stainless steel shelf, with hinged brackets, mounted flush to countertop**
- **Controls to be in rail**
- **LED Lights under extended top**
- **Electric outlet, mounted in base, with stainless-steel cover, wired to existing power sources**
- **Wire Chase in base, stainless steel, removeable cover**
- **Stainless steel kick plate on customer's side, 1/2" above floor for easy rolling**
- **Millwork style décor panel on customer**
- **Hinged louvered door on operator side with recessed handle**
- **3-Form panel 3/8-inches thick on customer side with stainless steel barrel stand-offs**

Fill Faucet on operators left with Expression style drain handle extended forward towards operator side
13. Hose bibb connection and high temp hose
14. BGA Food Shield, 45-3/4"W x 19-1/4"D x 32-1/2"H, adjustable from full-service to self-service guard, glass display shelf, single shelf, LED lights, 3/8" glass over-shelf & guard with 1/4" glass wings (tempered and polished edges) CULus, UL EPH Classified

ITEM #21B.1 HOT / COLD FOOD WELL UNIT, DROP-IN, ELECTRIC
Quantity: One (1)
Manufacturer: Duke Manufacturing (or equal)
Model: HCF-2
Status: CFCI
Hot/Cold/Freeze Drop-In Food Well Unit, 33-3/16"W x 25-1/2"D x 25-13/16"H, flush mount pans, (2) 12" x 20" individual pan, individual wired remote digital controls for hot or cold operation, individual drain, 10 ft. cord & plug, 120v/60/1-ph, 10.7 amps, NEMA 5-15P cULus, UL EPH Classified

ITEM #22 SERVING COUNTER, UTILITY
Quantity: One (1)
Manufacturer: Duke Manufacturing
Model: TST-46SS
Status: CFCI
Thurmaduke™ Solid Top Unit, mobile utility counter, 39"W x 32"D x 34"H, solid surface quartz composite type extended countertop on backer board, 20ga stainless steel body & undershelves, 6" high stainless-steel legs with stainless steel on flanged feet, NSF
Cutting Board/Shelf, operator's side, 7"D, 18ga stainless steel shelf, with hinged brackets, mounted flush to countertop
LED Lights under extended top
Electric outlet, mounted in base, with stainless-steel cover, wired to existing power sources
(1) NEMA 5-15R Convenience outlet
(1) NEMA 5-15R for undercounter LED Lights
Wire Chase in base, stainless steel, removeable cover
Stainless steel kick plate on customer's side, 1/2" above floor for easy rolling
Hinged single door, customer side, stainless steel, lift-off hinges and ADA compliant door pulls
Millwork style décor panel on customer
3-Form panel 3/8-inches thick on customer side with stainless steel barrel stand-offs
ON & OFF switch for undercounter LED Lights
125-amp panel box pre-wired, single/three phase 120/208/240 service required all final connections in the field at KEC expense

ITEM #23 MILK COOLER
Quantity: One (1)
Manufacturer: Beverage Air (or equal)
Model: SMF58HC-1-W
Status: OFCI
This item is owner furnished contractor installed. Contractor to verify utility and installation requirements. Equipment vendor to verify equipment configurations with the DSA approved drawings.
School Milk Cooler, forced air, 58"W x 33-5/8"D x 47"H, 24 cu. ft., single access, exterior digital thermometer, flat top carton capacities, (16) 13" x 13" x 11" or (10) 19" x 13" x 11" case capacity, self-latching doors/lids with safety bumpers, cylinder lock, wire floor racks, floor drain, electronic control, auto

defrost, galvanized steel interior with stainless steel floor, white exterior, R290 Hydrocarbon refrigerant, 1/3 HP, cULus, UL EPH Classified, UL-Sanitation, Made in USA

Accessories:

2 ea. 3 years parts & labor warranty (excludes maintenance items)
2 ea. Self-Contained refrigeration
2 ea. Additional 4 years compressor warranty (part only), standard
2 ea. 115v/60/1-ph, 3.3 amps, cord with NEMA 5-15P
2 ea. 6" Heavy duty casters, (2) with brakes, standard

ITEM #24 CASH REGISTER STAND
Quantity: One (1)
Manufacturer: Duke Manufacturing
Model: TCS-30SS
Status: CFCI
Thurmaduke™ Cashier Stand, mobile, 30"W, 32"D, 34"H, 16ga stainless top, solid surface quartz composite type extended countertop on backer board, 20ga stainless steel body & undershelves, Omission of bottom shelf for ADA compliance, 5" dia. gray poly swivel casters & brakes, NSF
Stainless steel drawer, with lock and keys
Tray Slide, cashier's left, 32" W x 12-1/4" D, solid stainless steel, on hinged brackets, with (2) 1/8" die-formed rubbing tracks, & mounted 34" high
Tray Slide, cashier's right, 32" W x 12-1/4" D, solid stainless steel, on hinged brackets, with (2) 1/8" die-formed rubbing tracks, & mounted 34" high
Millwork style décor panel on customer & end

ITEM #26 REMOTE REFRIGERATION
Quantity: One (1)
Manufacturer: Cold Zone (or equal)
Model: MPL-2
Status: CFCI
MINI-PAK REFRIGERATION SYSTEM

A. The outdoor air-cooled, refrigeration system is to be U.L. Listed and will be located on the roof of the building. This unit includes the outdoor painted weather housing, compressors, copper core aluminum finned condenser, electrical control panel, all housed within a single assembly and the evaporator coil assemblies, all with the required options and accessories. All of the component parts, options and accessories will be provided, mounted, piped and wired, as required by the manufacturer.

B. The outdoor weather housing shall include a welded, de-burred and cleaned structural steel frame made of 12 gauge. The exterior housing and access doors will be manufactured of a minimum of 16 gauge galvanized steel which has been assembled and cleaned. The frame and shall be painted with a primer coat of epoxy based paint and finished with a coat of polyurethane acrylic enamel.

C. All of the component parts, options and accessories will be provided, mounted, piped and wired, as required by the manufacturer. The system shall be manufactured to operate at: 208/230 volts, 3 phase, 60 hertz.

COMPRESSOR AND CONDENSER SYSTEMS

A. All compressors will be Copeland hermetic, scroll, digital scroll, or discus. All compressors will be manufactured to operate with R-454A or R-454C refrigerant. Each Compressor system shall be filled with refrigerant compatible oil and will include discharge and suction line vibration protection for Copelametic and Discus compressors, dual pressure control with stainless steel braided piping, liquid line filter-dryer, moisture indicating sight glass, flooded head pressure control valve and crankcase heater.

B. Each of these systems shall also include a receiver tank capable of accepting the entire systems refrigerant charge without exceeding 90% of its volumetric capacity. Each receiver will be provided with a pressure relief vent and, at its inlet and outlet and an isolation valve with a service port. Additionally, all compressor systems that will operate at suction temperatures below 0°F shall include a suction line accumulator.

C. The condenser system shall include the Multi-Circuited condenser rated for 120 F ambient, 12 fins per inch, ECM condenser fan motors with 24 inch fan blades mounted in a venturi contoured air-scoop protected by plastic coated fan guards, and flooded head pressure controls. The compressors and condenser circuits shall be sized to operate at an average temperature differential between the ambient and condensing temperatures of 20°F.

AIM ACT COMPLIANCE

A. System is designed to meet the standards of the AIM Act using refrigerant R454A or R454C, which have a Global Warming potential of <300 or 150. All evaporator coils will include factory mounted and wired leak detection and dual speed fan motors for venting. ColdZone will provide a suction check valve, and an electromechanical liquid line solenoid valve shipped loose for field installation with each coil. These valves should be mounted as close to the evaporator coil as possible but must be installed outside the walk-in fixture.

B. The electrical contractor must provide control wiring from each evaporator coil to each liquid line mitigation valve mounted outside the fixture. The voltage will be line voltage, either 115v for medium temperature coils or 208-230V for low temperature coils.

CONTROL PANEL

A. The control panel shall be protected include circuit breakers, start capacitors, and fan cycle control thermostats for each of the condenser fan motors. A fused disconnect will be located on the rack system. A wiring diagram of the refrigeration system shall be provided and mounted inside of the refrigerated system. All internal wiring shall be shown on the wiring diagram.

EVAPORATOR COILS WITH EcoNet 2.0 DEFROST

A. Evaporator coils shall be direct expansion type fabricated of cop¬per tubes with aluminum fins.

B. All evaporator coils shall be provided with solenoid valve, thermo¬static expansion valve, thermostat for medium temp evaporators (thermostat for low-temp evaporators is part of the demand defrost system), and wired to the junction box for positive pump-down. Evaporators come standard in a dual voltage configuration, include ECM type fan motors that will operate at the dual speeds of 1,550 rpm max and 900 rpm min, and are designed to function with new “wide glide” refrigerants.

C. Low-temperature evaporator coils are to be provided with ColdZone’s EcoNet Defrost Controller, which is factory mounted and programmed, and includes a visible display with navigation buttons. The EcoNet system will precisely maintains superheat and fixture temperatures, using the electronic expansion valve, and will eliminate unnecessary defrost cycles by measuring compressor run-times in order to defrost only when needed. The Econet is Title 24 compliant and will reduce evaporator fan speeds by 50% during the off-cycle in order to reduce energy consumption.

GENERAL NOTES

A. GENERAL CONTRACTOR
1. Contractors shall verify all dimensions and coordinate with other trades.

2. General contractor shall prepare the platform, curbed openings and weatherproofing the same after installation.

B. REFRIGERATION CONTRACTOR
1. The complete system shall be evacuated with vacuum pump.
2. Charge, test and adjust each unit to assure proper operation.
3. All copper tubing to be refrigerant grade ACR. or type "l".
4. Silver solder and/or sil-fos shall be used for all refrigerant piping. Soft solder is not acceptable.
5. All piping to be pressure tested with nitrogen at 3oo psi. After the condensing unit and coil have been connected, the balance of the system shall be leak tested with all valves open.
6. Refrigeration contractor to provide and install drain line heater in freezer to be connected by electrical contractor.

C. ELECTRICAL CONTRACTOR
1. Electrical contractor to connect drain line heater in freezer.
2. Electrical contractor to provide power for refrigeration package and evaporator coils.
3. All electrical wiring and installation shall be in accordance with the wiring diagram and local codes.

D. PLUMBING CONTRACTOR
1. Plumbing contractor to provide ACR or type "l" copper drain lines for walk-in refrigeration and freezer, pitched 1/2" per foot of run. In freezer, unheated drain line must be outside of insulation to prevent freezing. Trap drain line outside of refrigerated space to avoid entrance of warm and moist air.
2. Plumbing contractor to provide individual drain line for each evaporator unless otherwise called for.
3. All plumbing installation shall be in accordance with local codes.

ITEM #27 MOP SINK CABINET
Quantity: One (1)
Manufacturer: Eagle Group (or equal)
Model: F1916-VSCS-DR
Status: OFCI
This item is owner furnished contractor installed. Contractor to verify utility and installation requirements. Equipment vendor to verify equipment configurations with the DSA approved drawings.
Mop Sink Cabinet, double width, 47-1/2"W x 22-1/4"D x 84-1/4"H, slanted top, holds (2) mops, (2) hinged doors with transverse rod handles & keyed locks, 8" deep mop sink with service faucet (in right cabinet), (1) fixed shelf above mop sink, (3) fixed shelves in left cabinet, includes 30" spray hose & spray hose bracket, 430 stainless steel construction, NSF.

ITEM #28 PLANETARY MIXER
Quantity: One (1)
Manufacturer: Hobart (or equal)
Model: HL200-1STD
Status: OFCI
This item is owner furnished contractor installed. Contractor to verify utility and installation requirements. Equipment vendor to verify equipment configurations with the DSA approved drawings.
Bench type mixer; with bowl, beater, whip & spiral dough arm, US/EXP configuration - Legacy Planetary Mixer, Bench, 20 quart, (3) fixed speeds plus stir speed, gear-driven transmission, 15-minute SmartTimer™, #12 taper hub, manual bowl lift, stainless steel bowl, aluminum "B" beater, stainless steel "D" wire whip, aluminum "ED" spiral dough arm, stainless steel bowl guard, 1/2 hp, cord with plug

	Acessories:
1 ea.	Standard warranty - 1-Year parts, labor & travel time during normal working hours within the USA
1 ea.	K-12 School Nutrition extended warranty extends the warranty for 12 months beyond the 12 month Original Equipment Warranty, not to exceed 24 months from date of installation
1 ea.	Model TABLEHW-HL2012 Mixer Table; 27”W x 32”D x 26”H, the top shelf is drilled for mounting an HL120 or HL200 mixer, includes 4 posts for storing attachments, a lower shelf for additional storage, & (4) locking 5” diameter wheels

END OF SECTION

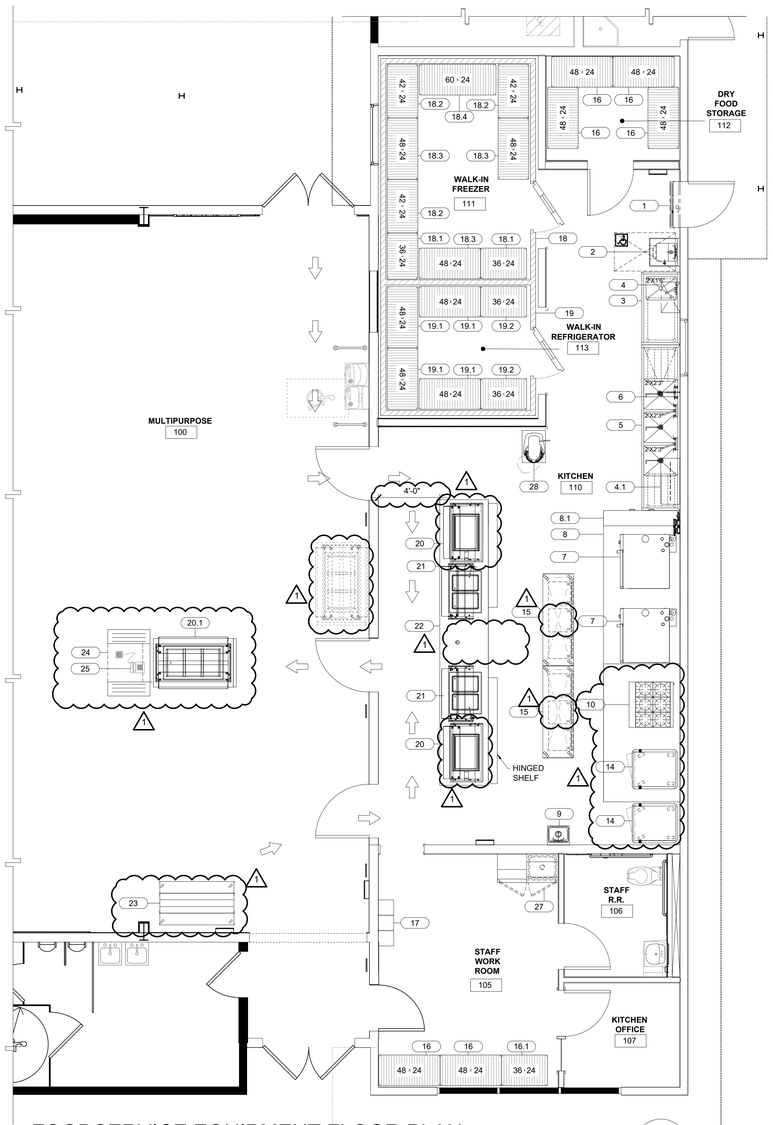

FOODSERVICE EQUIPMENT FLOOR PLAN

SCALE : 1/4" = 1'-0"

1 FS1.1

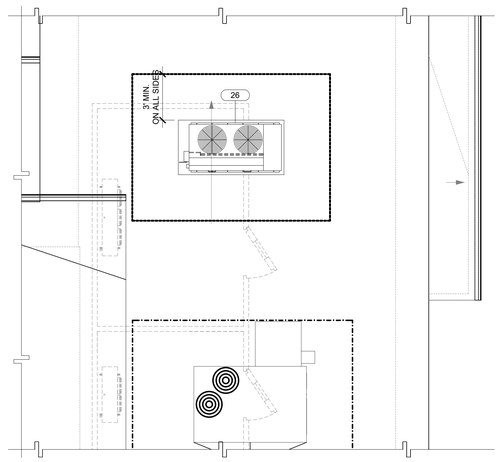

FOODSERVICE EQUIPMENT ROOF PLAN

SCALE : 1/4" = 1'-0"

2 FS1.1

EQUIPMENT SCHEDULE

ITEM NO	QTY	OFCI ITEMS	EQUIPMENT CATEGORY	MANUFACTURER	MODEL NUMBER	EQUIPMENT REMARKS	EQUIPMENT WT. LBS	ANCHORAGE DETAILS
1	1	X	AIR CURTAIN, UNHEATED	BERNER	SLC07-1036A		45	K/FS8.1
2	1	X	SINK, HAND, WALL MOUNT	EAGLE GROUP/METAL MASTERS	HSAP-14-ADA-FW		55	C/FS8.2
3	1	X	PREPERATION SINK	CUSTOM	FABRICATED ITEM		260	B/FS8.1
4	1	X	WALL MOUNTED SHELF	CUSTOM	FABRICATED ITEM		40	G/FS8.1
4.1	1	X	WALL MOUNTED SHLEF WITH POT RACK	ADVANCED TABCO	PS-15-36		75	G/FS8.1
5	1	X	THREE COMP. SINK	CUSTOM	FABRICATED ITEM		390	A/FS8.1
6	1	X	PRE-RINSE FAUCET, BACKSPLASH MOUNT	FISHER	13390		12.4	
7	2	X	DOUBLE STACK COMBI OVEN	RATIONAL USA	ICP 6-FULL/ 6-FULL G 208/240V 1 PHASE	VERIFY GAS TYPE	982	C/FS8.3
8	1		EXHAUST HOOD W/ STAINLESS STEEL WALL LINING	CAPTIVE AIRE / CUSTOM	6024ND-2-PSP-F		1143	K/FS8.2
8.1	1		FIRE SYSTEM	CAPTIVE AIRE/ANSUL	R-102			
9	1	X	HAND SINK, WALL MOUNT	ADVANCE TABCO	7-PS-68		13	C/FS8.2
10	1	X	GAS RESTAURANT RANGE	GARLAND	GFE36-6R		439	A/FS8.3
11			SPARE					
12			SPARE					
13			SPARE					
14	2	X	MOBILE WARMING & HOLDING CABINET	CRES COR	H137SUA12D		360	L/FS8.1
15	2	X	MOBILE WORK TABLE WITH UTENSIL DRAWERS	CUSTOM	FABRICATED ITEM		340	MOBILE
16	7	X	DRY STORAGE SHELVING	METRO	A2448NC		2000	D/FS8.2
16.1	1	X	DRY STORAGE SHELVING	METRO	A2436NC		2000	D/FS8.2
17	1	X	LOCKERS		SEE ARCH. SECTION			
18	1		WALK-IN FREEZER	RMI	FABRICATED ITEM	14'2"x9'5" I.D.	(1)	A/FS6.1
18.1	2	X	COLD STORAGE SHELVING	METRO	A2436NK3		2000	G/FS8.2
18.2	3	X	COLD STORAGE SHELVING	METRO	A2442NK3		2000	G/FS8.2
18.3	3	X	COLD STORAGE SHELVING	METRO	A2448NK3		2000	G/FS8.2
18.4	1	X	COLD STORAGE SHELVING	METRO	A2460NK3		2000	G/FS8.2
19	1		WALK-IN REFRIGERATOR	RMI	FABRICATED ITEM	8'3"x9'5" I.D.	(1)	A/FS6.1
19.1	4	X	COLD STORAGE SHELVING	METRO	A2448NK3		2000	G/FS8.2
19.2	2	X	COLD STORAGE SHELVING	METRO	A2436NK3		2000	G/FS8.2
20	2		HOT/COLD PLATE (DOUBLE DECK)	DUKE	XP46ST	W/ SHELF ON ONE STAFF SIDE	570	B/FS8.2
20.1	1		SALAD BAR	DUKE	XP60ST	W/ SHELF ON ONE SIDE	425	MOBILE
21	2		HOT/COLD WELLS, FOODSTATION	DUKE	XP74ST	W/ SHELF ON ONE STAFF SIDE	525	B/FS8.2
22	1		PASS COUNTER	DUKE	XP18ST		315	B/FS8.2
23	1	X	MILK COOLER	BEVERAGE-AIR	STF58HC-1-S		458	MOBILE
24	1		POS CONTROLLER	DUKE	XP3DCS			MOBILE
25	1	X	POS UNIT			PROVIDED BY DISTRICT		
26	1		REMOTE REFRIGERATION	COLD ZONE	MPL-2		584	H/FS7.1
27	1	X	DOUBLE-WIDTH MOP SINK STORAGE CABINET	EAGLE GROUP	F1916-VSCS-DR		55	
28	1	X	COUNTER TOP MIXER W/ STAND	HOBART	HL200-1STD		280	MOBILE

NOTE:

(1) WALK-IN 8.5LBS PER SQFT. FOR 4" PANEL FOR WALLS, ROOF AND FLOOR

KITCHEN EQUIPMENT BRACING NOTE

ALL KITCHEN EQUIPMENT SHALL BE ANCHORED AND INSTALLED PER THE DETAILS ON THE DSA APPROVED CONSTRUCTION DOCUMENTS. WHERE NO DETAIL IS INDICATED, THE FOLLOWING COMPONENTS SHALL BE ANCHORED OR BRACED TO MEET THE FORCE AND DISPLACEMENT REQUIREMENTS PRESCRIBED IN THE 2022 CBC, SECTIONS 1617A.1.18 THROUGH 1617A.1.26 AND ASCE 7-16 CHAPTER 13, 26 AND 30.

1. ALL PERMANENT EQUIPMENT AND COMPONENTS.
2. TEMPORARY OR MOVABLE EQUIPMENT THAT IS PERMANENTLY ATTACHED (e.g. HARD WIRED) TO THE BUILDING UTILITY SERVICES SUCH AS ELECTRICITY, GAS OR WATER. "PERMANENTLY" ATTACHED SHALL INCLUDE ALL ELECTRICAL CONNECTIONS EXCEPT PLUGS FOR 110/220 VOLT RECEPTACLES HAVING A FLEXIBLE CABLE.
3. MOVABLE EQUIPMENT WHICH IS STATIONED IN ONE PLACE FOR MORE THAN 8 HOURS AND HEAVIER THAN 400 POUNDS OR HAS A CENTER OF MASS LOCATED 4 FEET OR MORE ABOVE THE ADJACENT FLOOR OR ROOF LEVEL THAT DIRECTLY SUPPORT THE COMPONENT ARE REQUIRED TO BE ANCHORED WITH TEMPORARY ATTACHMENTS.

THE FOLLOWING KITCHEN EQUIPMENT SHALL BE POSITIVELY ATTACHED TO THE STRUCTURE, BUT NEED NOT DEMONSTRATE DESIGN COMPLIANCE WITH THE REFERENCES NOTED ABOVE. THESE COMPONENTS SHALL HAVE FLEXIBLE CONNECTIONS PROVIDED BETWEEN THE COMPONENT AND ASSOCIATED DUCTWORK, PIPING, AND CONDUIT. FLEXIBLE CONNECTIONS MUST ALLOW MOVEMENT IN BOTH TRANSVERSE AND LONGITUDINAL DIRECTIONS:

A. COMPONENTS WEIGHING LESS THAN 400 POUNDS AND HAVE A CENTER OF MASS LOCATED 4 FEET OR LESS ABOVE THE ADJACENT FLOOR OR ROOF LEVEL THAT DIRECTLY SUPPORT THE COMPONENT.

B. COMPONENTS WEIGHTING LESS THAN 20 POUNDS, OR IN THE CASE OF DISTRIBUTED SYSTEMS, LESS THAN 5 POUNDS PER FOOT, WHICH ARE SUSPENDED FROM A ROOF OR FLOOR OR HUNG FROM A WALL.

THE ANCHORAGE OF AL KITCHEN EQUIPMENT SHALL BE SUBJECT TO THE APPROVAL OF THE DESIGN PROFESSIONAL IN GENERAL RESPONSIBLE CHARGE OR STRUCTURAL ENGINEER DELEGATED RESPONSIBILITY AND ACCEPTANCE BY DSA. THE PROJECT INSPECTOR WILL VERIFY THAT ALL COMPONENTS AND HAVE BEEN ANCHORED IN ACCORDANCE WITH ABOVE REQUIREMENTS.

KITCHEN EQUIPMENT HOOD AND FIRE SYSTEM

1. THE KITCHEN HOOD FIRE SUPPRESSION SYSTEM SHALL CONFORM TO THE REQUIREMENTS OF THE 2017 EDITION OF THE NFPA 17A (UL 300 SYSTEM)
2. INSTALLATION OF THE FIRE SUPPRESSION SYSTEM SHALL NOT BE STARTED UNTIL COMPLETE PLANS AND SPECIFICATIONS HAVE BEEN APPROVED BY DEPT. OF STATE ARCHITECT.
3. UPON COMPLETION OF THE SYSTEM IT SHALL BE TESTED IN THE PRESENCE OF THE STATE FIRE MARSHAL.

KITCHEN EQUIPMENT ANCHORAGE NOTE

1. ALL "HARDWIRE AND GAS" KITCHEN EQUIPMENT SHALL BE INSTALLED WITH SEISMIC RESTRAINTS PER GUIDELINES FOR SEISMIC RESTRAINTS OF KITCHEN EQUIPMENT AS PUBLISHED BY SMACNA AND THE DSA FIELD ENGINEER.
2. WHERE ANCHORAGE DETAILS ARE NOT SHOWN ON DRAWINGS OR IN GUIDELINES,THE FIELD INSTALLATION SHALL BE SUBJECT TO THE APPROVAL OF THE ARCHITECT AND THE DSA FIELD ENGINEER.
3. A COPY OF THE "GUIDELINES" SHALL BE PROVIDED BY THE CONTRACTOR AND KEPT ON THE JOB SITE AT ALL TIMES.

HEALTH DEPARTMENT NOTES:

1. PROVIDE THERMOMETER IN ALL REFRIGERATION UNITS CONTAINING PERISHABLE FOODS.
2. PROVIDE PROBE THERMOMETER FOR CHECKING HOT AND COLD FOODS.
3. FOOD STORAGE SHELVES SHALL BE MINIMUM SIZE (6) INCHES ABOVE FLOOR.
4. ALL EQUIPMENT SHALL MEET OR BE EQUIVALENT TO "NSF" STANDARDS.
5. PROVIDE GARMENT STORAGE AREA: LOCKER, CABINET OR HANGERS FOR EMPLOYEE GARMENTS.
6. RODENT AND INSECT-PROOF ALL EXTERIOR DOORS AND WINDOWS. PROVIDE HEAVY-DUTY SELF-CLOSERS ON ALL EXTERIOR DOORS AND RESTROOM DOORS. SEAL ALL HOLES OR GAPS AROUND PIPES ENTERING BUILDING.
7. EXTERIOR DOORS SHALL BE RODENT PROOF WITH NO OPENINGS GREATER THAN 1/4 INCH.
8. PROVIDE HARDWOOD, METAL, FORMICA OR OTHER APPROVED MATERIALS, SMOOTH WITH SEALER ON ALL TABLE, COUNTERS, SHELVES, AND OTHER FOOD CONTACT SURFACES.
9. PROVIDE HAZARDOUS SUBSTANCE LOCATION: SEPARATE CABINET, ROOM OR DESIGNATED AREA FOR STORAGE OF PESTICIDE AND CLEANING COMPOUNDS.
10. INSTALL EQUIPMENT TO FACILITATE CLEANING. PLACE FLOOR MOUNTED UNITS ON CASTERS, MINIMUM SIX (6) INCHES HIGH, ROUND, METAL LEGS, OR SEAL IN POSITION ON MINIMUM FOUR (4) INCH CURB.
11. UNPACKAGED PROCESSED FOODS ON DISPLAY SHALL BE EFFECTIVELY SHIELDED OR COVERED.
12. PROVIDE SOAP AND TOWEL DISPENSERS AT ALL HAND WASHING SINKS.
13. FLOOR SINKS SHALL BE INSTALLED FLUSH WITH FLOOR AND READILY ACCESSIBLE FOR CLEANING.
14. GREASE INTERCEPTORS SHALL BE INSTALLED READILY ACCESSIBLE FOR CLEANING.
15. PROVIDE PROTECTIVE COVERS ON ALL LIGHTS IN FOOD PREPARATION, OPENED FOOD STORAGE ROOM(S), UTENSIL WASH AREAS, OR USE SHATTERPROOF BULBS.
16. LIGHTING REQUIREMENTS:
    - -MINIMUM 50FT. CANDLES REQUIRED IN FOOD PREP AREA
    - -MINIMUM 20FT. CANDLES REQUIRED IN RESTROOMS AND BARS
    - -MINIMUM 10FT. CANDLES REQUIRED IN REFRIGERATORS
    - -MINIMUM 10FT. CANDLES REQUIRED IN STORAGE AREAS
    - -LIGHTING SHALL BE SHATTERPROOF OR SHIELDED
17. EXISTING FIXTURES, FINISHES, AND EQUIPMENT SHALL BE IN OPERABLE CONDITION AND SUBJECT TO FIELD APPROVAL.
18. WALLS & CEILING IN THE RESTROOMS, PREPARATION, STORAGE, AND JANITORIAL AREAS SHALL BE CONSTRUCTED OF APPROVED MATERIALS SO AS TO BE SMOOTH, WASHABLE, AND EASY TO CLEAN.

FOODSERVICE DRAWINGS INDEX

FS1.1 - FOODSERVICE EQUIPMENT FLOOR PLAN
FS2.1 - FOODSERVICE EQUIPMENT PLUMBING PLAN
FS3.1 - FOODSERVICE EQUIPMENT ELECTRICAL PLAN
FS4.1 - FOODSERVICE EQUIPMENT MECHANICAL PLAN
FS5.1 - FOODSERVICE EQUIPMENT EXHAUST HOOD DETAILS
FS5.2 - FOODSERVICE EQUIPMENT EXHAUST HOOD DETAILS
FS5.3 - FOODSERVICE EQUIPMENT EXHAUST HOOD DETAILS
FS5.4 - FOODSERVICE EQUIPMENT EXHAUST HOOD DETAILS
FS5.5 - FOODSERVICE EQUIPMENT PATH OF EGRESS PLAN
FS6.1 - FOODSERVICE EQUIPMENT WALK-IN DETAILS
FS7.1 - FOODSERVICE EQUIPMENT REMOTE REFRIGERATION
FS8.1 - FOODSERVICE EQUIPMENT ANCHORAGE DETAILS
FS8.2 - FOODSERVICE EQUIPMENT ANCHORAGE DETAILS
FS8.3 - FOODSERVICE EQUIPMENT ANCHORAGE DETAILS
FS9.1 - FOODSERVICE EQUIPMENT ELEVATIONS
FS9.2 - FOODSERVICE EQUIPMENT SERVING LINE
FS9.3 - FOODSERVICE EQUIPMENT SERVING LINE
FS9.4 - FOODSERVICE EQUIPMENT SERVING LINE
FS9.5 - FOODSERVICE EQUIPMENT SERVING LINE
FS9.6 - FOODSERVICE EQUIPMENT SERVING LINE

SHEET NOTES

1. REFER TO ARCH. DRAWINGS FOR FIRE EXTINGUISHER LOCATIONS. FIRE EXTINGUISHER FOR KITCHENS TO BY TYPE K
2. "ALL WORK SHALL CONFORM TO THE CALIFORNIA BUILDING CODE, CALIFORNIA ELECTRICAL CODE, CALIFORNIA MECHANICAL AND PLUMBING CODES, CALIFORNIA HEALTH AND SAFETY CODE. ALL FOOD SERVICES EQUIPMENT SHALL MEET AND BE INSTALLED PER THE REQUIREMENTS OF THE CALIFORNIA HEALTH AND SAFETY CODE DIVISION 22 AND ALL LOCAL CODES AND ORDINANCES."

SHEET NOTES

1. CONTRACTOR IS RESPONSIBLE TO VERIFY, COORDINATE AND PROVIDE ALL UTILITY, ASSEMBLY, INSTALLATION AND ANCHORAGE OF OWNER SUPPLIED EQUIPMENT AND DSA APPROVED DOCUMENTS.

FLOOR LEGEND

SYMBOL/ABBREVIATION	DESCRIPTION	SYMBOL	DESCRIPTION
OFCI	OWNER FURNISH / CONTRACTOR INSTALLED	30" CLR. / 48" CLR.	ACCESSIBLE CLEARANCES AND SYMBOL 30"x48" MIN CLEARANCE
OFOI	OWNER FURNISH / OWNER INSTALLED		OUTLINE OF FOODSERVICE EQUIPMENT
FSEC	FOODSERVICE EQUIPMENT CONTRACTOR		FOODSERVICE EQUIPMENT BELOW EQUIPMENT TOP
VFVI	VENDER FURNISH / VENDER INSTALLED		FOODSERVICE EQUIPMENT ABOVE EQUIPMENT TOP
(E), EXIST	EXISTING FOODSERVICE EQUIPMENT		MOBILE FOODSERVICE EQUIPMENT
(F)	FUTURE FOODSERVICE EQUIPMENT	F.E.	FIRE EXTINGUISHER & CABINET REFER TO ARCH. DRAWINGS FOR FIRE EXTINGUISHER LOCATIONS
	BUILDING WALLS (SEE ARCH. DWGS.)	FS.1	SHEET NUMBER
	WALK-IN COOLER/ FREEZER INSULATED WALLS	W.H.	WATER HEATER (SEE PLUMBING ENG. DWG.)
1 1	KEY / SHEET NOTE	A FS0.1 B	ELEVATION INDICATOR SYMBOL
1	ITEM NUMBER SYMBOL (SEE EQUIPMENT SCHEDULE FOR DESCRIPTION)		
KITCHEN 1	ROOM/ AREA NAME AND ROOM NUMBER		
C	COLUMN GRIDS WITH COLUMN INDICATORS		
48x#18	STORAGE SHELVING SIZES (Width x Length)		

AGENCY APPROVAL

EL DORADO MIDDLE SCHOOL
MULTI-PURPOSE BUILDING UPGRADES

1750 WEST ST, CONCORD, CA 94521

MT. DIABLO UNIFIED SCHOOL DISTRICT

AMD FOODSERVICE DESIGN
P.O BOX 163
GARDEN VALLEY, CA
95633
p. 530-333-4606
www.amdfoodservicedesign.com

CONSULTANT

nacht&lewis
600 Q Street, Suite 100
Sacramento, CA 95811
www.nachtlewis.com
916.329.4000

ARCHITECT

REVISIONS

NO.	DESCRIPTION	DATE

DATE

JOB NO. Y2326.00

SHEET TITLE

FOODSERVICE EQUIPMENT FLOOR PLAN

SHEET NO.

FS1.1

AD01-2

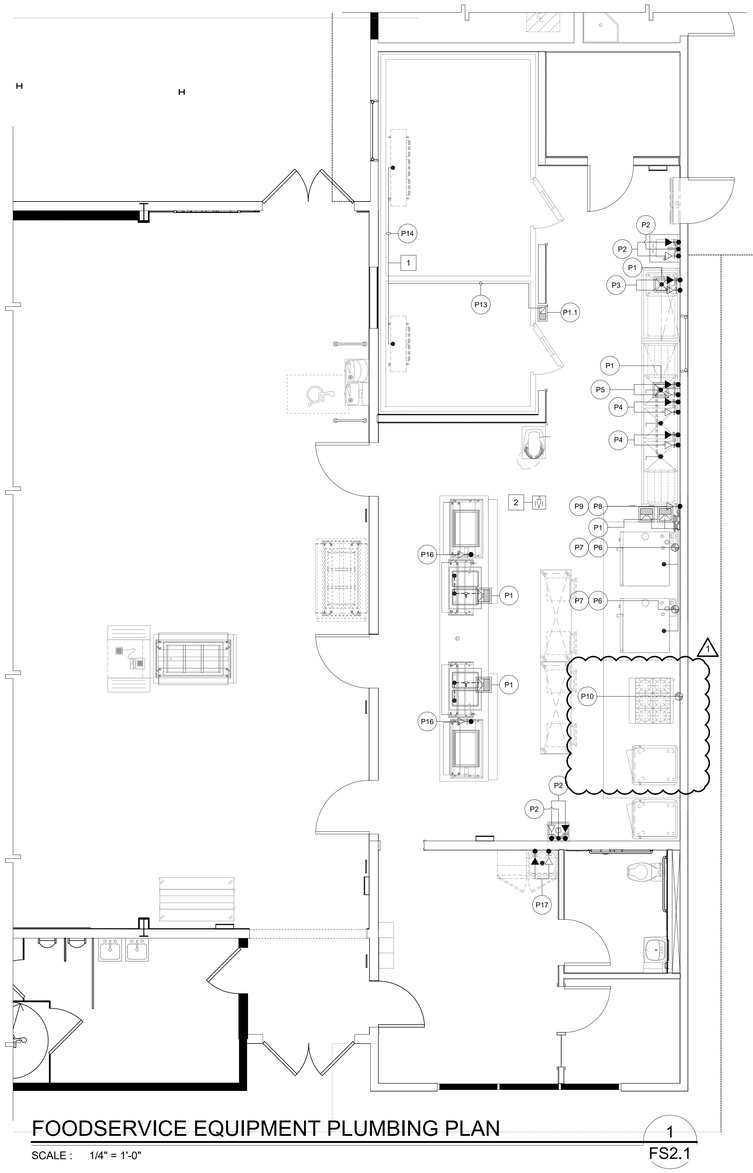

FOODSERVICE EQUIPMENT PLUMBING PLAN

SCALE : 1/4" = 1'-0"

1 FS2.1

PLUMBING SCHEDULE

PLUM. NO.	ITEM. NO.	DESCRIPTION	QTY.	WATER CONN. SIZE C.W.	WATER CONN. SIZE H.W.	WATER HGT.@ WALL	WASTE CONN. SIZE DIR.	WASTE CONN. SIZE INDIR.	WASTE HGT.@ WALL	GAS BTU/HR (x1,000)	GAS CONN. SIZE	GAS HGT. @ WALL	REMARKS	NOTE(S)
P1	-	FLOOR SINK	6EA.	-	-	-	-	-	0"	-	-	-	INSTALL FLUSH WITH FINISH FLOOR, PROVIDE GRATE COVER W/ DOME STRAINER, REFER TO PLUMBING PLANS FOR TYPE AND SIZE.	
P1.1	-	FLOOR SINK 1/2 SIZE	1EA.	-	-	-	-	-	0"	-	-	-	INSTALL FLUSH WITH FINISH FLOOR, PROVIDE GRATE COVER W/ DOME STRAINER, REFER TO PLUMBING PLANS FOR TYPE AND SIZE.	3
P2	2,9	WALL MOUNTED HAND SINK FAUCET W/ 1/2" INLET 4" CENTER	2EA.	1/2"	1/2"	18"	1 1/2"	-	24"	-	-	-	PROVIDE S.O.V., RUN PIPING TO UNIT CONNECTION. RUN DIRECT WASTE WITH P-TRAP.	3
P3	3	PREP SINK PLASH MOUNT FAUCET W/ 1/2" INLET 8" CENTER	1EA.	1/2"	1/2"	16"	"	2"	-	-	-	-	PROVIDE S.O.V., RUN PIPING TO UNIT CONNECTION. PROVIDE 2" INDIRECT DRAIN TO F.S. P1. (CHROME OR PAINT SILVER)	
P4	5	POTWASH SINK FAUCET W/ 3/4" INLET 8" CENTER	2EA.	3/4"	3/4"	16"	-	2"	-	-	-	-	PROVIDE S.O.V., RUN PIPING TO UNIT CONNECTION. PROVIDE 2" INDIRECT DRAIN TO F.S. P1. (CHROME OR PAINT SILVER)	
P5	6	PRE-RINSE FAUCET, SPLASH MOUNT FAUCET W/ 1/2" INLET 8" CENTER	1EA.	1/2"	1/2"	16"	-	-	-	-	-	-	PROVIDE S.O.V., RUN PIPING TO UNIT CONNECTION.	
P6	7	COMBI OVEN GAS CONNECTION(BOTTOM UNIT)	2EA.	-	-		-	2"	-	107	3/4	+18"	PROVIDE S.O.V., RUN PIPING TO UNIT CONNECTION. PROVIDE 1" INDIRECT DRAIN TO F.S. P1.	1 3
P7	7	COMBI OVEN GAS CONNECTION (TOP UNIT)	2EA.	-	-		-	2"	-	107	3/4	+49"	PROVIDE S.O.V., RUN PIPING TO UNIT CONNECTION. PROVIDE 1" INDIRECT DRAIN TO F.S. P1.	1 3
P8	7	WATER FILTER (BOTTOM UNIT)	1EA.	3/4"	-	+36"	-	-	-	-	-	-	PROVIDE S.O.V., RUN PIPING TO UNIT CONNECTION.	1 2 3
P9	7	WATER FILTER (TOP UNIT)	1EA.	3/4"	-	+60"	-	-	-	-	-	-	PROVIDE S.O.V., RUN PIPING TO UNIT CONNECTION.	1 2 3
P10	10	RANGE W/OVEN BASE	1EA.	-	-	-	-	-	-	136	3/4"	+18"	PROVIDE S.O.V., RUN PIPING TO UNIT CONNECTION.	3
P11		SPARE												
P12		SPARE												
P13	19	WALK-IN REFRIGERATOR CONN. DRAIN FROM COIL CONN. + 70"	1EA.	-	-	-	-	1"	-	-	-	-	1" INDIRECT DRAIN TO F.S. P1. SLOPE 1/2" PER FOOT. PROVIDE 1" MIN AIR GAP AT F.S. WITH 'P' TRAP.	
P14	19	WALK-IN FREEZER CONN. DRAIN FROM COIL CONN. + 70"	1EA.	-	-	-	-	1"	-	-	-	-	1" INDIRECT DRAIN TO F.S. P1. SLOPE 1/2" PER FOOT. PROVIDE 1" MIN AIR GAP AT F.S. WITH 'P' TRAP.	
P15		SPARE												
P16	21	HOT FOOD WELLS	2EA.	1/2"		-	-	1"	-	-	-	-	PROVIDE S.O.V., RUN PIPING TO UNIT CONNECTION. PROVIDE 1" INDIRECT DRAIN TO F.S. P1.	
P17	27	MOP SINK CABINET	1EA	1/2"	1/2"	48"	2"	-	0"	-	-	-	PROVIDE S.O.V., RUN PIPING TO UNIT CONNECTION. PROVIDE 2" DIRECT DRAIN TO F.S. P1.	

PLUMBING KEY NOTE(S):

1. VERIFY WATER QUALITY AND PRESSURE MEETS MANUFACTURERS STANDARD MINIMUM REQUIREMENTS
2. CONNECT OUTLET FROM WATER FILTER TO WATER INLET CONNECTION ON ITEM 7
3. OWNER FURNISHED CONTRACTOR INSTALLED EQUIPMENT CONTRACTOR TO VERIFY REQUIREMENTS

FIRE SYSTEM NOTE:

1. FURNISH AUTOMATIC GAS SHUT-OFF VALVE INCLUDING ANY NECESSARY ACCESS PANEL. CONTRACTOR SHALL INSTALL THE AUTOMATIC SHUT-OFF VALVE IN AN ACCESSIBLE LOCATION. REFER TO PLUMBING DRAWINGS FOR GAS VALVE LOCATION.

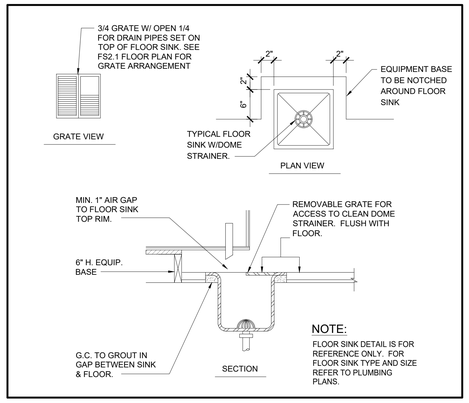

FLUSH FLOOR SINK DETAIL

SCALE : NONE LOCATED UNDER WORK COUNTERS

2 FS2.1

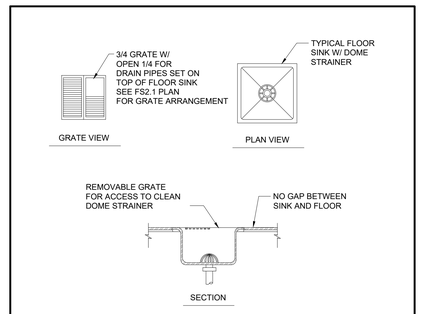

FLUSH FLOOR SINK DETAIL

SCALE : NONE

3 FS2.1

FLOOR SINK AND UTILITY NOTES

CONTRACTOR TO VERIFY AND COORDINATE FLOOR SINK LOCATIONS WITH ON SITE CONDITIONS, DRAWING AND EQUIPMENT LOCATIONS.

PLUMBING NOTES

(MINIMUM REQUIREMENTS UNLESS NOTED OTHERWISE)

1. PLUMBING CONTRACTOR TO VERIFY ALL INCOMING SERVICE AND MAKE FINAL HOOK-UPS TO ALL APPLICABLE EQUIPMENT AND TO PROVIDE ALL PIPING, TEES, ELLS, TRAPS, FILTERS, REGULATORS, FAUCETS, ETC., UNLESS SPECIFICALLY STATED OTHERWISE.
2. ALL HORIZONTAL DIMENSIONS SHOWN ON PLAN ARE FROM FINISHED FACE OF WALL TO CENTERLINE OF STUB-OUT OR FROM CENTERLINE OF STUB-OUT TO CENTERLINE OF STUB-OUT, UNLESS NOTED OTHERWISE ON PLAN OR DETAILS. (VERIFY ALL DIMENSIONS)
3. SYMBOLS NOTED +24", +48", ETC., INDICATES TO STUB-OUT OF WALL AT HEIGHT INDICATED. HEIGHT IS GIVEN FROM FINISHED FLOOR (NOT FINISHED CURB) TO CENTERLINE OF STUB-OUT. SYMBOLS INDICATED "STUB-UP" AND "STUB-DOWN" ARE TO EXTEND ABOVE FINISHED FLOOR AND/OR BELOW FINISHED CEILING AT LOCATION SHOWN.
4. PLUMBING STUBS AND CONNECTIONS SHOWN ON PLANS ARE FOR EQUIPMENT FURNISHED BY THE FOOD SERVICE EQUIPMENT CONTRACTOR.
5. FLOOR SINKS SHOWN ARE TO BE SET FLUSHED WITH TOP OF FINISHED FLOOR. FLOOR SINKS INDICATED HALF-IN AND HALF-OUT OF EQUIPMENT TO BE SET FLUSHED WITH TOP OF FINISHED FLOOR. FLOOR SINKS LOCATED COMPLETELY WITHIN EQUIPMENT AREA TO BE SET FLUSHED WITH TOP OF FINISHED FLOOR.
6. PLUMBING CONTRACTOR TO PROVIDE AND INSTALL REMOVABLE COVERS OR GRATES FOR ALL FULLY OR PARTIALLY EXPOSED FLOOR SINKS. GRATES TO HAVE 1/2" MAX OPEN'GS WHERE DRAIN IS EXPOSED TO P.O.T OR TO PEDESTRIAN WAYS TYP.
7. PLUMBING CONTRACTOR SHALL SEAL ALL PLUMBING PENETRATIONS THROUGH WALLS, FLOORS, AND CEILINGS. WATERTIGHT AND VERMIN-PROOF.
8. PLUMBING CONTRACTOR TO PROVIDE AND INSTALL SHUT-OFF VALVES ON ALL WATER AND GAS LINES, INCLUDING VALVES IN FIXTURES, LOCATED IN SUCH A WAY AS TO BE ACCESSIBLE WITHOUT USE OF TOOLS.
9. PLUMBING CONTRACTOR TO PROVIDE AND INSTALL FOR ALL APPLICABLE EQUIPMENT, A TRAPPED FLOOR SINK WITH A LEGAL AIR GAP DRAIN LINE (INDIRECT WASTE) TO FLOOR SINK. INSULATE ALL DRAIN LINES FROM ICE BINS, ICE MACHINES, REFRIG. EQUIP., ETC..

FOODSERVICE PLUMBING LEGEND

ABREV./SYMB.	DESCRIPTION
C.W.	COLD WATER
H.W.	HOT WATER
DIR.	WASTE (DIRECT CONNECTION)
INDIR.	INDIRECT WASTE (AIR GAP)
LAV.	LAVATORY
W.C.	WATER CLOSET
F.S.	FLOOR SINK
P.C.	PLUMBING CONTRACTOR
G.C.	GENERAL CONTRACTOR
K.E.C.	KITCHEN EQUIPMENT CONTRACTOR
S.O.V.	SHUT OFF VALVE
GPH	GALLONS PER HOUR
PSI	POUNDS PER SQUARE INCH
(F)	DEGREES FAHRENHEIT
CONN.	CONNECT
LOC.	LOCATE

SYMBOL	DESCRIPTION
P1	PLUMBING SCHEDULE REFERENCE, REFER TO FS2.1 FOR SCHEDULE
1	SHEET AND/OR KEY NOTE
	COLD WATER INLET
	HOT WATER INLET
	WATER CONNECTION TO EQUIPMENT
	SHUT OFF VALVE (S.O.V.)
	COLD WATER SHUT OFF VALVE
	GAS SHUT-OFF VALVE
	FLOOR SINK
	FLOOR DRAIN
	WASTE DOWN
	GAS INLET
	WALK-IN DRAIN LINE
	I.D. DRAIN LINE

PLUMBING PLAN SHEET NOTES

1. CONDENSATE DRAINS FROM COILS TO BE FURNISHED AND INSTALLED BY PLUMBING CONTRACTOR PROVIDE HEAT TRACE W/ INSULATION FROM COIL TO DRAIN (FREEZER)
2. ELECTRIC GAS SHUT-OFF VALVE FOR EXHAUST HOOD FIRE SYSTEM WITH ACCESS DOOR. REFER TO PLUMBING PLANS FOR LOCATION. INTERCONNECT WITH FIRE SYSTEM.

AGENCY APPROVAL

EL DORADO MIDDLE SCHOOL
MULTI-PURPOSE BUILDING UPGRADES

1750 WEST ST, CONCORD, CA 94521

MT. DIABLO UNIFIED SCHOOL DISTRICT

AMD FOODSERVICE DESIGN
P.O BOX 163
GARDEN VALLEY, CA
95633
p. 530-333-4606
www.amdfoodservicedesign.com

CONSULTANT

nacht&lewis
600 Q Street, Suite 100
Sacramento, CA 95811
www.nachtlewis.com
916.329.4000

ARCHITECT

REVISIONS

NO.	DESCRIPTION	DATE

DATE

JOB NO. Y2326.00

SHEET TITLE

FOODSERVICE EQUIPMENT PLUMBING PLAN

SHEET NO.

FS2.1

AD01-3

ONE AND ONE-HALF INCH = ONE FOOT
ONE INCH = ONE FOOT
THREE-QUARTERS INCH = ONE FOOT
ONE-HALF INCH = ONE FOOT
ONE-QUARTER INCH = ONE FOOT
ONE-EIGHTH INCH = ONE FOOT
ONE-SIXTEENTH INCH = ONE FOOT
ONE INCH = TWENTY FEET

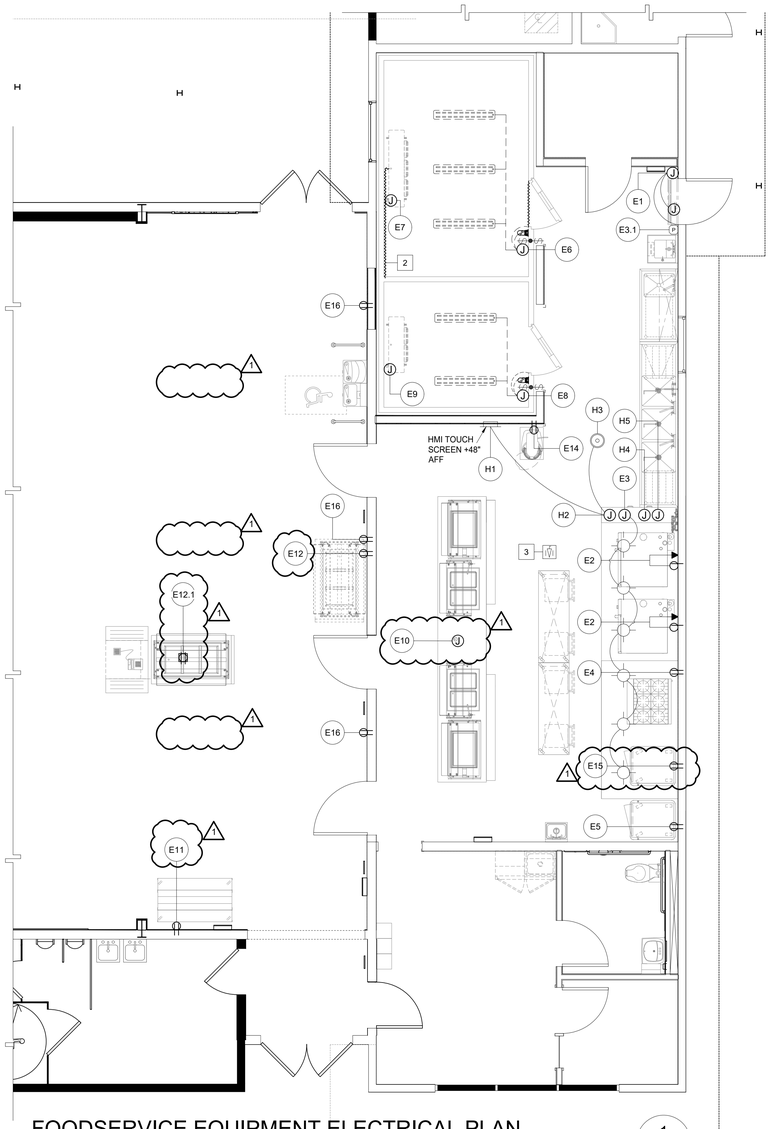

FOODSERVICE EQUIPMENT ELECTRICAL PLAN

SCALE : 1/4" = 1'-0"

1 FS3.1

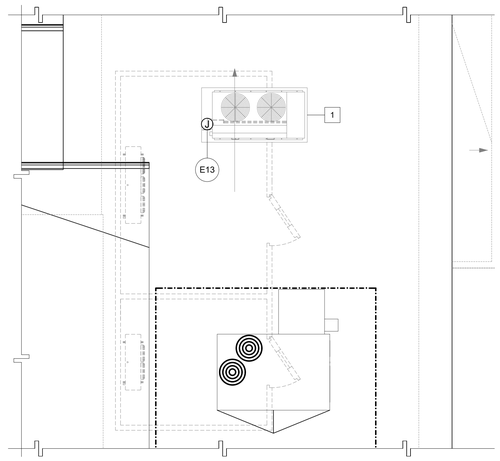

FOODSERVICE EQUIPMENT ELECTRICAL ROOF PLAN

SCALE : 1/4" = 1'-0"

2 FS3.1

ELECTRICAL SCHEDULE

ELEC. NO.	ITEM NO.	DESCRIPTION	QTY.	VOLT.	PH	DIRECT	PLUG	NEMA	LOAD WATT	LOAD AMPS. DRAW	LOAD HP	OUTLET HEIGHT	REMARKS	NOTE(S)
E1	1	AIR CURTAIN	1EA.	120	1	X	-	-	-	3.4	1/2	+86"	PROVIDE J-BOX IN WALL INSTALL DOOR LIMIT SWITCH FOR INSTANT ON/OFF SWITCH BY F.S.E.C SEE DETAIL K/FS8.1	
E2	7	DOUBLE STACK COMBI OVEN (POWER AND DATA)	2EA.	208/240	1	-	X	6-15P	-	15	-	+18"/+50"	PROVIDE SIMPLEX RECEPTACLE IN WALL UNIT PROVIDED WITH CORD AND PLUG SET	4 5 6
E3	8.1	FIRE SYSTEM AT ANSUL CONTROL AUTOMAN PANEL	1EA.	120	1	X	-	-	-	20	-	+104"	120V/1-20AMP @ ANSUL CONTROL	
E3.1	8.1	FIRE SYSTEM (REMOTE PULL STATION)	1EA.	-	-	X	-	-	-	-	-	+48"	EMPTY FLUSH MT'D. OCTAGONAL BOX (REMOTE PULL) SEE DETAIL 1&2/FS5.4	3
E4	10	RANGE	1EA.	115	1	-	X	5-15P	-	1	-	+18"	PROVIDE DUPLEX RECEPTACLE IN WALL UNIT PROVIDED WITH CORD AND PLUG SET	4 6
E5	14	MOBILE WARMING HOLDING CABINET	1EA.	120	1	-	X	5-15P	-	14.1	-	+48"	PROVIDE DUPLEX RECEPTACLE IN WALL UNIT PROVIDED WITH CORD AND PLUG SET	6
E6	18	WALK-IN FREEZER (BOX)	1EA.	120	1	X	-	-	-	1.6	-	+88"	(3) 39W LED CLG. MT'D. LIGHT FIXTURES (1) 11.5W LED LIGHT FIXTURE AT DOOR. 250W DOOR HEATER, 20W P.R.P, 100W WINDOW HEATER EC. TO PROVIDE ALL INTERCONNECTIONS.	
⚠1 E7	18	WALK-IN FREEZER (COIL)	1EA.	208	1	X	-	-	-	10.8	-	+74"	CONNECT TO UNIT ELECTRICAL CONNECTION AT COIL INSIDE WALK-IN FREEZER. SEE DETAIL C/FS7.1	1 2
E8	19	WALK-IN REFRIGERATOR (BOX)	1EA.	120	1	X	-	-	-	1.5	-	+88"	(2) 39W LED CLG. MT'D. LIGHT FIXTURES (1) 11.5W LED LIGHT FIXTURE AT DOOR. CONTRACTOR TO PROVIDE ALL INTERCONNECTIONS.	
E9	19	WALK-IN REFRIGERATOR (COIL)	1EA.	115	1	X	-	-	-	1.6	-	+74"	CONNECT TO UNIT ELECTRICAL CONNECTION AT COIL INSIDE WALK-IN REFRIGERATOR. SEE DETAIL C/FS7.1	1
⚠1 E10	20	LOAD CENTER	1EA.	120	1	X	-	-	4608	38.4	-	+8"	PROVIDE J-BOX AT FLOOR CONNECT TO COUNTER LOAD CENTER- SERVING COUNTER TO BE FULLY WIRED AT FACTORY	
E11	23	MILK COOLER	1EA.	120	1	-	X	5-15P	-	3.3	-	+18"	PROVIDE DUPLEX RECEPTACLE IN WALL UNIT PROVIDED WITH CORD AND PLUG SET	6
⚠1 E12	20.1	SALAD BAR ALT LOCATION	1EA.	120	1	-	X	5-15P	-	5.50	-	+18"	PROVIDE DUPLEX RECEPTACLE IN WALL UNIT PROVIDED WITH CORD AND PLUG SET	
⚠1 E12.1	20.1	SALAD BAR FLOOR LOCATION	1EA.	120	1	-	X	5-15P	-	5.50	-	+0"	PROVIDE FLUSH MOUNTED ELECTRICAL OUTLET UNIT PROVIDED WITH CORD AND PLUG SET	
⚠1 E13	26	REMOTE REFRIGERATION	1EA.	208	3	X	-	-	-	33	-	+18"	CONNECT TO DISCONNECT LOCATED ON REFRIGERATION RACK REFER TO FS7.1 REMOTE REFRIGERATION LOCATED ON BUILDING ROOF	
E14	28	MIXER AND STAND	1EA.	120	1	-	X	5-15P	-	8	-	+36"	PROVIDE DUPLEX RECEPTACLE IN WALL UNIT PROVIDED WITH CORD AND PLUG SET	6
⚠1 E15	14	MOBILE WARMING HOLDING CABINET	1EA.	120	1	-	X	5-15P	-	14.1	-	+48"	PROVIDE DUPLEX RECEPTACLE IN WALL UNIT PROVIDED WITH CORD AND PLUG SET	6 4
E16	25	CASHIER STATION (POWER) ALL LOCATION) VERIFY W/ DISTRICT FURNISHED POS UNIT	3EA.	120	1	X	-	-	-	20	-	+18"	PROVIDE (2) DUPLEX ELECTRICAL OUTLETS (VERIFY W/ DISTRICT POS REQ.)	6

WALK-IN REFRIGERATION ELECTRICAL (MINIMUM REQUIREMENTS UNLESS NOTED OTHERWISE)

1. - THE ELECTRICAL CONTRACTOR SHALL INSTALL AND INTER WIRE LIGHT SWITCHES AND FIXTURES REQUIRED FOR THE FOOD SERVICE EQUIPMENT AND MAKE FINAL CONNECTIONS.
2. - THE FOOD SERVICE EQUIPMENT CONTRACTOR SHALL INSTALL THE PRESSURE RELIEF PORT, DOOR HEATERS, DRAIN LINE HEATERS AND TEMPETURE ALARM SYSTEM. INTER WIRING AND FINAL CONNECTIONS BY THE ELECTRICAL CONTRACTOR.
3. - THE ELECTRICAL CONTRACTOR SHALL INTER WIRE THE TIME CLOCK ON THE CONDENSING UNIT TO THE DEFROST RELAY ON THE UNIT EVAPORATOR LOCATED IN THE FREEZER COMPARTMENT.
4. - THE ELECTRICAL CONTRACTOR SHALL PROVIDE ALL CONDUIT AND WIRING NECESSARY FOR A COMPLETE AND OPERABLE SYSTEM WITH ALL CONDUIT IN SO FAR AS POSSIBLE MOUNTED ON THE EXTERIOR CEILING OF THE WALK-IN ASSEMBLY. PENETRATIONS AND ESCUTCHEON PLATES SHALL BE FURNISHED AND INSTALLED BY THE FOOD SERVICE CONTRACTOR. FOOD SERVICE EQUIPMENT CONTRACTOR IS RESPONSIBLE FOR SEALING THE INSIDE OF CONDUITS WHICH PENETRATE THE CEILING OR WALL.

ELECTRICAL KEYNOTES:

1. E.C. TO INTERCONNECT FROM REMOTE REFRIGERATION SYSTEM ITEM NO. 26
2. DRAIN LINE HEATER CONNECTED TO COIL. F.S.E.C TO PROVIDE HEATER E.C TO WIRE TO COIL
3. ELECTRICAL CONTRACTOR TO PROVIDE EMPTY FLUSH MT'D. OCTAGONAL BOX @ +48" AFF. W/ EMPTY CONDUIT TO +2" ABOVE CEILING.
4. ELECTRICAL CONTRACTOR TO PROVIDE INTERLOCK WIRING FROM FIRE PROTECTION SYSTEMS TO ELEC. SHUNT TRIP BREAKERS.
5. UTILITY REQUIREMENTS ARE 1 PER DECK (4 TOTAL CONNECTIONS)
6. OWNER FURNISHED CONTRACTOR INSTALLED EQUIPMENT CONTRACTOR TO VERIFY REQUIREMENTS

EXHAUST HOOD ELECTRICAL SCHEDULE

ELEC. NO.	ITEM NO.	DESCRIPTION	QTY.	VOLT.	PH	DIRECT	PLUG	NEMA	LOAD WATT	LOAD AMPS. DRAW	LOAD HP	OUTLET HEIGHT	REMARKS	NOTE(S)
H1	8	TOUCH SCREEN USER INTERFACE MOUNT +48" AFF. RECESSED IN WALL	1EA.	-	-	-	-	-	-	-	-	-	CONNECT TO ENERGY MANAGEMENT SYSTEM IN UTILITY CABINET AT END OF HOOD ITEM 8 WITH CAT-5 CABLE (NO POWER REQUIRED AT THIS LOCATION)	1 2 5
H2	8	EXHAUST HOOD (LIGHTS) & SMART CONTROLS SC-320110MA	1EA.	120	1	X	-	-	-	20	-	+104"	EC TO PROVIDE CONNECTION	4 5 6
H3	8	ENERGY MANGEMNT SYSTEM SC-320110MA (ROOM SENSOR)	-	-	-	-	-	-	-	-	-	-	CONNECT TO ENERGY MANAGEMENT SYSTEM IN UTILITY CABINET AT END OF HOOD ITEM 13 LOW VOLTAGE WIRING (ROOM TEMPERATURE SENSOR CLG. MOUNTED)	5
H4	8	EXHAUST HOOD (EXHAUST FANS) & SMART CONTROLS SC-320110MA	1EA.	208	3	X	-	-	-	6	-	+104"	EC TO PROVIDE CONNECTION	6
H5	8	EXHAUST HOOD (EXHAUST FANS) & SMART CONTROLS SC-320110MA	1EA.	208	3	X	-	-	-	6	-	+104"	EC TO PROVIDE CONNECTION	6

ELECTRICAL KEYNOTES:

1. E.C. TO INTERCONNECT SC-320110MA TO MECHANICAL EQUIPMENT ON ROOF (REFER TO MECHANICAL DRAWINGS)
2. E.C. TO INTERCONNECT POWER FROM HOOD TOUCH SCREEN USER INTERFACE LOCATED ON WALL WITH SC-320110MA SMART CONTROLS
4. 120V/1 PHASE FOR LIGHTS TO ONE PRE-WIRED CONN. POINT ON HOOD FOR LIGHTS PRE-WIRED BY FACTORY.
5. REFER TO HOOD DRAWING FS5.3 FOR ELECTRICAL SCHEMATIC
6. SC-320110MA SEE FS5.3 FOR SCHEMATIC

EXHAUST HOOD ELECTRICAL NOTES

1. - ELECTRICAL CONTRACTOR TO PROVIDE ALL HIGH/LOW VOLTAGE CONNECTIONS REQUIRED BY EXHAUST HOOD MANUFACTURER. SEE FOODSERVICE EXHAUST HOOD MANUFACTURER SHEETS FOR DETAILS.
2. - ALL ELECTRICAL CONDUIT THAT IS PROVIDED BY E.C. TO BE RECESSED IN WALL (NO SURFACE MOUNT CONDUIT)
3. - VERIFY ALL EXHAUST HOOD AND EXHAUST HOOD COMPONENTS ELECTRICAL REQUIREMENTS WITH MANUFACTURER DRAWINGS.

ELECTRICAL NOTES

1. THE ELECTRICAL CONTRACTOR SHALL PROVIDE ALL ROUGH-INS, FINAL CONNECTIONS AND INTER- CONNECTIONS TO THE FOOD SERVICE EQUIPMENT
2. CONNECTIONS SHOWN ARE FOR THE FOOD SERVICE EQUIPMENT ONLY. REFER TO ELECTRICAL DRAWINGS FOR CONVENIENCE OUTLETS AND ADDITIONAL REQUIREMENTS.
3. RECEPTACLES, JUNCTION/HANDY BOXES INDICATED AT WALLS SHALL BE CONCEALED IN THE WALL AND STUBBED OUT OF THE WALL AT THE HEIGHT INDICATED.
4. RECEPTACLES, JUNCTION/HANDY BOXES INDICATED AT WALLS SHALL BE CONCEALED IN THE WALL AT THE HEIGHT INDICATED.
5. VERTICAL DIMENSIONS ARE GIVEN FROM FINISHED FLOOR TO CENTER LINE OF ROUGH-IN LOCATION.
6. UTILITIES WHEREVER POSSIBLE SHALL BE BROUGHT IN FROM ABOVE,
7. VERIFY THE UTILITY REQUIREMENTS OF OWNER FURNISHED AND/OR EXISTING EQUIPMENT.
8. THE ELECTRICAL CONTRACTOR SHALL FURNISH AND/OR INSTALL ALL JUNCTION/HANDY BOXES, EXTENSION RINGS, DISCONNECT SWITCHES AS SHOWN, CONVENIENCE OUTLETS WITH STAINLESS STEEL COVERS, SWITCHES, CONNECTORS, CONTROLS AND OTHER ACCESSORIES THAT ARE NOT AN INTEGRAL PART OF THE FOOD SERVICE EQUIPMENT AS REQUIRED TO MAKE FINAL CONNECTIONS TO THE EQUIPMENT FOR A COMPLETE AND OPERABLE OPERATION MEETING ALL APPLICABLE CODES AND ORDINANCES.
9. JUNCTION/HANDY BOXES, CONVENIENCE OUTLETS AND SPECIAL PURPOSE OUTLETS SHOWN IN FABRICATED WORK TABLES AND COUNTERS SHALL BE FURNISHED BY FABRICATOR. ELECTRICAL CONTRACTOR TO PROVED ALL WIRING & RECEPTACLES.

ELECTRICAL CONNECTION ACCESS

1. - WHERE ITEMS CONNECT TO UTILITY UNDER COUNTER, CONTRACTOR TO VERIFY THAT A GROMMET HOLE IS PROVIDED FOR NECESSARY ACCESS TO CONNECT EQUIPMENT TO UTILITY.

ELECTRICAL PLAN LEGEND

SYMBOL	DESCRIPTION	SYMBOL	DESCRIPTION
AFF	ABOVE FINISHED FLOOR	J	JUNCTION BOX
CLG.	CEILING	▲	DATA OUTLET
CONN.	CONNECT	P	EMPTY OCTAGONAL BOX W/ CONDUIT TO +2" ABOVE CEILING BY E.C
E.C.	ELECTRICAL CONTRACTOR		VAPOR-PROOF LIGHT FIXTURE AT EXHAUST HOOD (PROVIDED BY F.S.E.C. INSTALLED BY E.C.)
FSEC	FOOD SERVICE EQUIPMENT CONTRACTOR	J	STUBBED-UP JUNCTION BOX
G.C.	GENERAL CONTRACTOR		STUBBED-UP CONVENIENCE OUTLET
P.R.P.	PRESSURE RELIEF PORT		STUBBED-UP SIMPLEX OUTLET
S.F.	STAINLESS STEEL FABRICATOR	▲	STUBBED-UP DATA OUTLET
M.C.	MECHANICAL CONTRACTOR	$	WALL MOUNTED SWITCH BY E.C
LOC.	LOCATE		VAPOR-PROOF FLUORESCENT FIXTURE PROVIDED BY F.S.E.C. INSTALLED BY E.C.)
E1	ELECTRICAL SCHEDULE REFERENCE, REFER TO FS3.1 FOR SCHEDULE		VAPOR-PROOF LIGHT FIXTURE AT WALK-IN PROVIDED BY F.S.E.C. INSTALLED BY E.C.)
1 1	SHEET AND/OR KEY NOTE		
	DUPLEX CONVENIENCE OUTLET 115V/1Ø UNLESS OTHERWISE NOTED		
	SIMPLEX OUTLET SEE SCHEDULE FOR VOLTAGE		
	CEILING MOUNTED, VAPOR-PROOF LIGHT FIXTURE W/ JUNCTION BOX, 115V/1Ø UNLESS OTHERWISE NOTED (WALK-IN REFRIGERATOR)		
	ROOM TEMPERTURE SENSOR		

ELECTRICAL SHEET NOTES

1. REMOTE REFRIGERATION RACK SYSTEM ITEM NO. 26 REFER TO FS7.1 FOR DETAILS LOCATED ON BUILDING ROOF
2. ELECTRIC HEAT TRACE SPIRALED TAPED AND INSULATED CONNECTED AT COIL BY F.S.E.C REFER K/FS8.3
3. ELECTRICAL GAS SHUT-OFF VALVE ⚠1 CONTRACTOR TOPROVIDE ALL CONDUITS AND INTERCONNECTIONS FOR PROPER OPPERATION

AGENCY APPROVAL

EL DORADO MIDDLE SCHOOL
MULTI-PURPOSE BUILDING UPGRADES

1750 WEST ST, CONCORD, CA 94521

MT. DIABLO UNIFIED SCHOOL DISTRICT

AMD FOODSERVICE DESIGN
P.O BOX 163
GARDEN VALLEY, CA
95633
p. 530-333-4606
www.amdfoodservicedesign.com

CONSULTANT
nacht&lewis
600 Q Street, Suite 100
Sacramento, CA 95811
www.nachtlewis.com
916.329.4000

ARCHITECT

REVISIONS

NO.	DESCRIPTION	DATE

DATE

JOB NO. Y2326.00

SHEET TITLE

FOODSERVICE EQUIPMENT ELECTRICAL PLAN

SHEET NO.

FS3.1

AD01-4

ONE AND ONE-HALF INCH = ONE FOOT
ONE INCH = ONE FOOT
THREE-QUARTERS INCH = ONE FOOT
ONE-HALF INCH = ONE FOOT
ONE-QUARTER INCH = ONE FOOT
ONE-EIGHTH INCH = ONE FOOT
ONE-SIXTEENTH INCH = ONE FOOT
ONE INCH = TWENTY FEET

- SYSTEM REQUIRES A MINIMUM OF 7 FT OF EQUIVALENT PIPE LENGTH BETWEEN TANK AND NEAREST APPLIANCE NOZZLE FOR MOST APPLIANCES. EACH 90 DEGREE ELBOW ADDS 1.3 FT OF EQUIVALENT LENGTH. SEE MANUAL FOR DETAILS

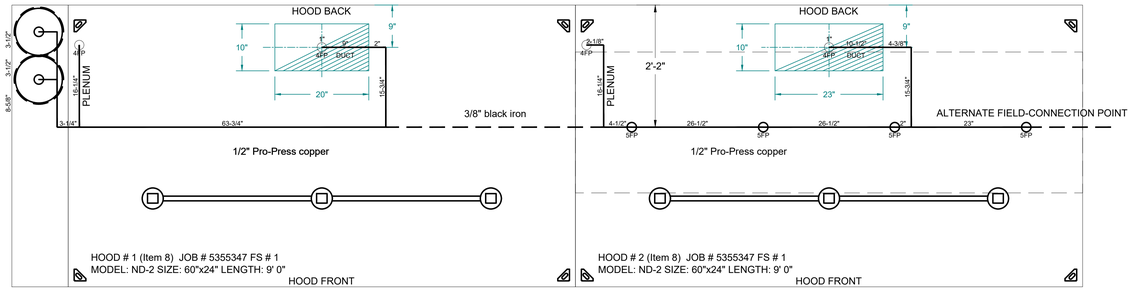

FIRE SYSTEM PLAN VIEW

1 FS5.4

EGV1-1/2

FACTORY PIPING EXTENDS A MAXIMUM OF 6" ABOVE THE TOP OF THE HOOD.

All factory piping 1/2" Pro-Press copper, field piping connections can be Pro-Press or 3/8" black iron

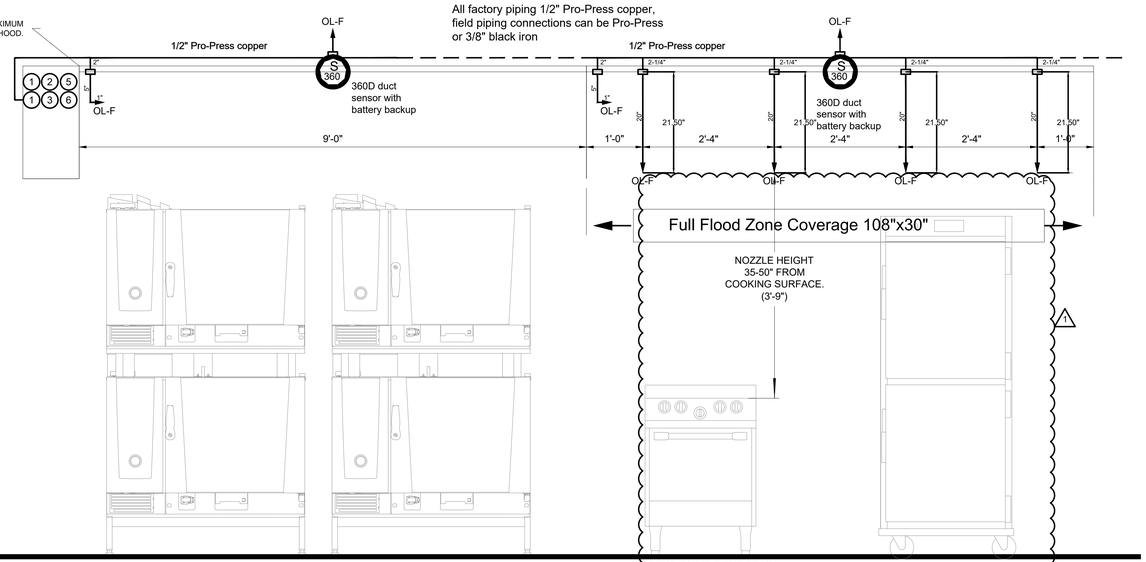

FIRE SYSTEM ELEVATION

2 FS5.4

Electric push station with battery backup, 48" AFF, 10'-20' from hazard, in the path of egress

7

Appliance Coverage

Table 3 illustrates the maximum permitted cooking surface dimensions of each appliance that can be protected within a single overlapping zone. It is important to note that the cooking surface (area requiring protection) is different than the total appliance size.

Table 3 - Standard Overlapping Protection 5 nozzles per tank (20 flow points), 36" nozzle spacing

Hazard	Fuel Source	Maximum Depth of Cooking Surfaces	Maximum Length of Cooking Surfaces	Maximum Height of Fuel
Multi Vat Fryer [3] (with or w/o Drip-board)	Gas or Electric	30" deep	Unlimited	N/A
Split Vat Fryer, [3] (with or w/o Drip-board)	Gas or Electric	30" deep	Unlimited	N/A
Tilt Skillet	Gas or Electric	30" deep	Unlimited	N/A
Griddle	Gas or Electric	30" deep	Unlimited	N/A
Gas/Electric Radiant Charbroiler	Gas or Electric	30" deep	Unlimited	N/A
Upright Charbroiler/ Salamander, Chain*	Gas or Electric	30" deep	Unlimited	N/A
Appliance w/o Shelf/Obstruction*	Gas or Electric	30" deep	Unlimited	N/A
Wok	Gas or Electric	11-24" diameter	11-24" diameter	6-3/4" deep

NOZZLE CHART			
20FP PER TANK X 2 TANKS = 40FP			
NOZZLE	FP	QTY	TTL FP
OL-F (4FP)	= 4FP	4	16FP OUT OF 40FP
OL-F (5FP)	= 5FP	4	20FP OUT OF 40FP
Total			36FP OUT OF 40FP

System Designed by
Matt Eidson
Tank Certified Designer
12/14/21 Certificate

Table 4 - Overlapping Protection 4 nozzles per tank (20 flow points), 30" nozzle spacing

Hazard	Fuel Source	Maximum Depth of Cooking Surfaces	Maximum Length of Cooking Surfaces	Maximum Height of Fuel
Deep Fat/Industrial Fryers (with or w/o Drip-board)	Gas or Electric	34" deep	Unlimited	N/A
Pressure Fryers*	Gas or Electric	34" deep	Unlimited	N/A
Tilt Skillet	Gas or Electric	34" deep	Unlimited	N/A
Wok	Gas or Electric	Greater than 24", up to 30" diameter	30 inch diameter	9-1/2" deep

Deep Fat, Industrial, Pressure Fryers, and Skillets over 14" wide and up to 34" max depth will be overlapping with 4 nozzles per tank, 30" spacing. Max oil capacity: 24.75 gallons.

* Henny Penny fryer models 690, 691, and 692 are allowed with standard 30" nozzle spacing as long as the nozzle flow pattern is not obstructed by the lid while in the fully open position. A nozzle is required on both sides of the lid.

NOTES
- FIELD PIPE DROPS AS SHOWN
  PIPING, ELBOWS, TEES, AND NOZZLES SUPPLIED BY CAS.
- FIELD INSTALLED DROP: FACTORY WILL PROVIDE QTY 2 60IN LONG PIECES OF CHROME PLATED PIPING SHIPPED LOOSE TO BE FIELD-INSTALLED.
- SHIP LOOSE DROP: FACTORY WILL PROVIDE THE EXACT CHROME PIPE LENGTH NEEDED SHIPPED LOOSE TO BE FIELD-INSTALLED.
- RELOCATE NOZZLES IF FLOW PATTERN IS BLOCKED BY SHELVING, SALAMANDERS, ETC.
- OVERLAPPING COVERAGE SHALL NOT BE USED ON ANY APPLIANCE WITH AN OBSTRUCTION.
- IF APPLICABLE, EXTENDED PRE-PIPED DROPS ARE SHIPPED LOOSE.
- FACTORY PIPING EXTENDS A MAXIMUM OF 6" ABOVE THE TOP OF THE HOOD.

- APPLIANCE DIMENSIONS LISTED REPRESENT THE COOKING SURFACE SIZE, NOT THE OVERALL APPLIANCE SIZE.

- THIS FIRE SYSTEM COMPLIES WITH U.L. 300 REQUIREMENTS.

- OL-F NOZZLE PART NUMBER REPLACES 3070-3/8H-10-SS

JOB #: 5355347.
JOB NAME: VALLEY VIEW SCHOOL.

SYSTEM SIZE: TANK-SP-2 TOTAL FP REQUIRED: 36.
HOOD # 1 9' 0.00" LONG x 60" WIDE x 24" HIGH.
RISER # 1 SIZE: 10" x 20".
HOOD # 1 METAL BLOW-OFF CAPS INCLUDED.
HOOD # 2 9' 0.00" LONG x 60" WIDE x 24" HIGH.
RISER # 1 SIZE: 10" x 23".
HOOD # 2 METAL BLOW-OFF CAPS INCLUDED.

- HEAVY-DUTY APPLIANCES (RATED 600°F) WILL REQUIRE AN ADDITIONAL DOWNSTREAM FIRESTAT IN THE EVENT THAT THE DUCTWORK CONTAINS ANY HORIZONTAL RUNS OVER 25 FT IN LENGTH.
- MEDIUM TO LIGHT-DUTY APPLIANCES (RATED 450°F) WILL NOT REQUIRE ANY ADDITIONAL DOWNSTREAM DETECTION.

LEGEND – FIRE CABINET TANK SYSTEM

1	4 GALLON TANK.
2	PRIMARY ACTUATOR RELEASE.
3	SECONDARY ACTUATOR RELEASE.
4	PRESSURE SUPERVISION SWITCH.
5	PRIMARY HOSE ASSEMBLY.
6	SECONDARY HOSE ASSEMBLY.
7	REMOTE MANUAL ACTUATION DEVICE.

Firestat (Heat) Detector

The Firestat (Fenwal Detect-a-Fire) is a listed electric thermal detector available in a variety of temperature settings and used to actuate the TANK Fire Suppression extinguishing system automatically. When a Firestat senses a temperature higher than its setpoint, the Firestat contacts will close and energize the TANK Fire Suppression system via the control panel.

Figure 10 - Firestat

Nozzles

The nozzle (p/n 3070-3/8H-SS10) is a 4 flow nozzle and is used for plenum, duct, and dedicated appliance coverage (e.g., salamanders, upright broilers, chain broilers, and appliance with upright obstructions). The nozzles include a cap (p/n 3074-1-1). The cap prevents contamination from entering the pipe network and is designed to pop-off upon system discharge, allowing the agent to flow to the protected hazard area. Refer to "Duct and Plenum Protection" on page 14.

Figure 6 - Fire System Nozzle

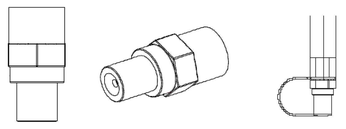

General Notes:

1: All Installation procedures are in compliance with manufacturer's specifications and in accordance with NFPA17A (2016) and NFPA96 (2016) standards.

2: Remote pull station is mounted no higher than 48" from finished floor and in path of egress

3: The hood extinguishing system must be interconnected to the building alarm system

4: Automatic fuel shut down device(s) shall shut down all sources of fuel under the hood.

5: All electrical under the hood shall shut down upon activation

6: Exhaust fan is to stay on and make up air must shut down upon system activation

7: A K Class rated fire extinguisher accessible within 30 foot unobstructed path from cooking equipment is required

8: System to be test fired and witnessed by local fire authorities upon completion.

FIRE SYSTEM NOTES

GENERAL
CUSTOMER RESPONSIBLE FOR ADDITIONAL LABOR AND PARTS CHANGES AS A RESULT OF COOKING EQUIPMENT LAYOUT CHANGES OR MISINFORMATION AFTER RELEASE OF ORDER.

CUSTOMER RESPONSIBLE FOR ADDITIONAL TRIPS BY FIRE SYSTEM DISTRIBUTOR DUE TO JOB SITE DELAYS.

UNION LABOR CHARGES, IF REQUIRED, ARE EXTRA.

GAS VALVE
ELECTRICAL GAS VALVE IS TO BE INSTALLED BY PLUMBING CONTRACTOR. PLUMBING PERMIT REQUIRED FOR GAS VALVE INSTALLATION.

ELECTRIC SHUT OFF
ELECTRICAL COOKING EQUIPMENT MUST BE SHUT OFF WHEN FIRE SYSTEM IS ACTIVATED. ELECTRICAL CONTRACTOR IS TO PROVIDE SHUT OFF CONTACTS OR SHUNT TRIP BREAKERS. THE DESIGN OF THE FIRE SYSTEM SHALL COMPLY WITH S.M.A.C.N.A. GUIDELINES FOR SEISMIC RESTAINTS OF MECHANICAL SYSTEMS. O.S.H.P.D. APPROVED ANCHORAGE R-0010 SUPPORTS AND BRACING OF PIPE & CONDUIT.

IF APPLICABLE TO LOCAL CODE
EXISTING FIRE ALARM SYSTEM MUST BE INTERCONNECTED TO THE FIRE SYSTEM. SYSTEM HAS AN ALARM POINT AND TROUBLE.

FIRE SUPPRESSION SYSTEM TEST
THE TEST WILL BE CONDUCTED IN FRONT OF A SYSTEM INSPECTOR WITH A NITROGEN CARTRIDGE WITH BALLOONS COVERING THE SYSTEM NOZZLES. THE TEST WILL BE CONDUCTED SIMULATING THE REMOTE AND AUTOMATIC ACTUATION.

REMOTE PULL STATION
DEEP SINGLE GANG BOX WITH 1/2 EMT RUN BACK TO HOOD CONTROLS 48" ABOVE FINISHED FLOOR.

SHEET NOTES
1. CONTRACTOR IS RESPONSIBLE TO COORDINATE AND PROVIDE ALL CONNECTIONS TO AND FROM FIRE SYSTEM

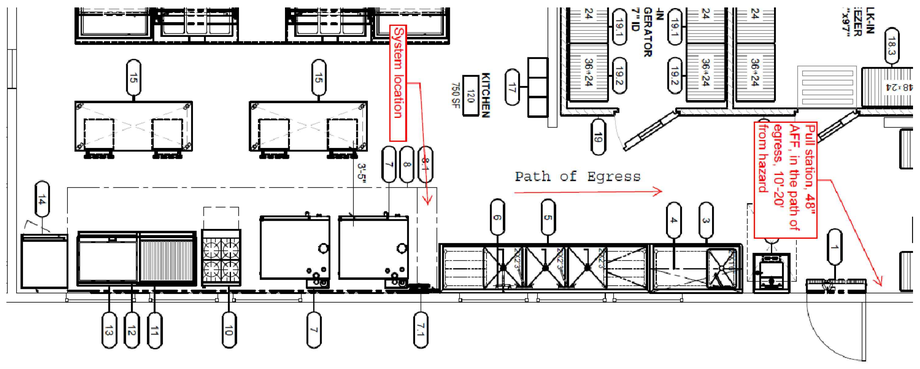

AGENCY APPROVAL

EL DORADO MIDDLE SCHOOL
MULTI-PURPOSE BUILDING UPGRADES
1750 WEST ST, CONCORD, CA 94521

MT. DIABLO UNIFIED SCHOOL DISTRICT

AMD FOODSERVICE DESIGN
P.O BOX 163
GARDEN VALLEY, CA
95633
p. 530-333-4606
www.amdfoodservicedesign.com

CONSULTANT
nacht&lewis
600 Q Street, Suite 100
Sacramento, CA 95811
www.nachtlewis.com
916.329.4000

ARCHITECT

REVISIONS

NO.	DESCRIPTION	DATE

DATE

JOB NO. Y2326.00

SHEET TITLE

FOODSERVICE EQUIPMENT EXHAUST HOOD DETAILS

SHEET NO.

FS5.4

AD01-5

ONE AND ONE-HALF INCH = ONE FOOT
ONE INCH = ONE FOOT
THREE-QUARTERS INCH = ONE FOOT
ONE-HALF INCH = ONE FOOT
ONE-QUARTER INCH = ONE FOOT
ONE-EIGHTH INCH = ONE FOOT
ONE-SIXTEENTH INCH = ONE FOOT
ONE INCH = TWENTY FEET

ONE AND ONE-HALF INCH = ONE FOOT 1 6 0
ONE INCH = ONE FOOT 0 6 0
THREE-QUARTERS INCH = ONE FOOT 2 0 6 0
ONE-HALF INCH = ONE FOOT 4 0
ONE-QUARTER INCH = ONE FOOT 8 4 0
ONE-EIGHTH INCH = ONE FOOT 16 8 4 0
ONE-SIXTEENTH INCH = ONE FOOT 32 16 8 4 0
ONE INCH = TWENTY FEET 80 60 40 20 10 5 0

REFRIGERATION RACK OUTLINE DRAWING (A) FS7.1

MINI-PAK MODEL: MPL-2

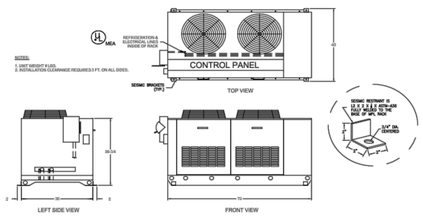

NOTES:
1. UNIT WEIGHT IS 635.
2. INSTALLATION CLEARANCE REQUIRES 3 FT. ON ALL SIDES.

NOTES:
1. TOTAL SYSTEM WEIGHT: 635 LBS
2. INSTALLATION CLEARANCE REQUIRES 3 FT ON ALL SIDES

SUGGESTED ROOF PAD DETAIL (B) FS7.1

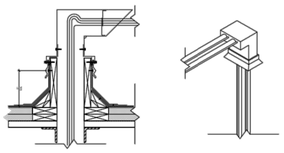

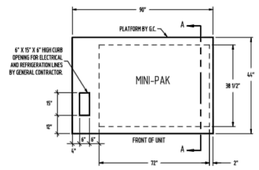

G.C. NOTES
1-PLATFORM TO BE INSTALLED LEVEL.
2-PROVIDE DIRECTMETAL HAT SECTION WITH WATER TIGHT SOLDERED JOINTS.
3-BACK FILL OPENING WITH NOT PITCH AFTER INSTALLATION.
4 - ROOF CONTRACTOR TO FOLLOW ALL LOCAL, STATE, AND NATIONAL BUILDING CODES. DETAILS SHOWN HERE FOR INFORMATION ONLY.

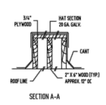

REFER TO // FS8.3 FOR REMOTE REFRIGERATION PLATFORM ANCHORAGE

COLDZONE ENGINEERING SUMMARY

POWER SUPPLY: 208-230/3/60 — MIIN CIRCUIT AMPACITY 37 A
CONNECTED LOAD 33 A — FUSE SIZE 50 A

IDENT SYSTEM	IDENT ITEM NUMBER	FIXTURES DESCRIPTION	FIXTURES FIXTURE LOAD	FIXT.°F FIX T.	FIXT.°F SUCT.	REFRIG. R-	COMPRESSORS COMPRESSOR MODEL NUMBER	COMPRESSORS H.P.	COMPRESSORS RECEIVER CAPACITY LBS. (@ 90%)	COMPRESSORS % OF LOAD CAPACITY	COMPRESSOR ELECTRICAL CHARACTERISTICS RLA	V	PH	COOLING CAPACITY (BTUH) AT 100 AMBIENT	DEFROST *	QUANTITY	EVAPORATOR COILS MODEL NO.	NOMINAL CAPACITY TOTAL	EVAPORATOR COILS MFR. REMARKS	FAN 1PH AMP	V	HEATER AMP	V	PH	TOTAL SYSTEM AMPS	CONNECTION SIZES ** ROLITE +	SUCTION	LIQUID	DRAIN FITTINGS - NPT	DEFROST OPTION NO.	CIRCUIT WITH DEFROST TIME CLOCK	ACCESSORIES HEATED AND INSULATED RECEIVER	SUCTION ACCUMULATOR	SUCTION FILTER	OIL SEPARATOR	FURNISHED BY (SEE CODE) T/STAT	S'NOID	EXP VALVE	REMARKS
A	19	Walk-in Cooler	8914	35	25	454C	YS09KAE	1	10.00	104%	7.2	208-230	3	9253	A	1	CAL6A08ADA	8800	COLDZONE	1.6	115/1				7.2		5/8	3/8	3/8-14	ECONET	NO	NO	NO	SEALED	NO	FI	FL	FI	
B	18	Walk-in Freezer	12506	-10	-20	454C	YF13KAE	1	34.00	104%	17	208-230	3	13009	C	1	CAL6E129DDA	12800	COLDZONE	1	208-230/1	0.8	208-230	1	17		1-1/8	1/2	3/8-14	ECONET	NO	NO	YES	SEALED	NO	FI	FL	FI	

SYSTEM ITEM NO:26 — CONDENSER FAN: 2 — CONDENSER FAN AMPS: 6.8

LEGEND: * A-AIR DEFROST G-GRAVITY(W/TIMER); E- ELECTRIC DEFROST DD-DEMAND DEFROST; + S-SINGLE M-MAIN B-BRANCH; ** VERIFY LINE SIZES WITH JOB SITE CONDITIONS; MFR- FURNISH WITH FIXTURE FI- CZ TO FURNISH AND SHIP LOOSE FI- CZ TO FURNISH AND INSTALL ON UNIT; 2* - MULTIPLE EVAPORATORS TIED TO ONE COMPRESSOR TO BE BONDED BY OTHERS RC- FURNISH AND INSTALL BY REF. CONTRACTOR

NOTE:
CONDENSER SELECTED FOR 0 FEET ELEVATION AND 100°F AMBIENT TEMPERATURE
ALL COMPRESSOR CIRCUITS INDIVIDUALLY PIPED WITH SEALED LIQUID AND SUCTION FILTERS, CRANKCASE HEATERS, AND HEAD PRESSURE CONTROL VALVES
ELECTROMECHANICAL CONTROLS PER COMPRESSOR WITH HIGH/LOW PRESSURE SWITCHES
POWDER COATED STEEL CABINET PANELS

THE INFORMATION DISCLOSED HEREIN WAS ORIGINATED BY AND IS THE PROPERTY OF COLDZONE AND EXCEPT FOR RIGHTS EXPRESSLY GRANTED TO THE CUSTOMER, COLDZONE RESERVES ALL PATENT, PROPERTY, DESIGN, USE, SALE, MANUFACTURING AND REPRODUCTION RIGHTS THERETO.

GENERAL NOTES

REFRIGERATION PIPE SIZES ARE BASED ON A MAXIMUM LINE RUN OF 100 EQUIVALENT FEET FOR LIQUID AND SUCTION LINES. THIS INCLUDES AN ALLOWANCE OF 45 EQUIVALENT FEET FOR VERTICAL RISERS. LINE RUNS LONGER THAN 100 EQUIVALENT FEET MAY VOID THE LINE SIZES INDICATED ON OUR SUBMITTAL DRAWING

IT IS THE INSTALLING CONTRACTORS RESPONSIBILITY TO FOLLOW ALL APPLICABLE CODES AND CURRENT REFRIGERATION INDUSTRY STANDARDS AND PRACTICES WHEN DETERMINING LINE SIZES, AND INSTALLING AND STARTING UP COLDZONE EQUIPMENT

EVAPORATOR AND PIPING SERVICE / ISOLATION VALVES ARE RECOMMENDED FOR PARALLEL AND MULTIPLEX SYSTEMS. THESE VALVES ARE TO BE SUPPLIED AND INSTALLED BY THE INSTALLING CONTRACTOR.

COLDZONE EVAPORATORS WILL HAVE LIQUID LINE SHUT OFF AND SUCTION CHECK VALVES SHIPPED LOOSE FOR FIELD INSTALLATION OUTSIDE WALK-IN (WITHIN NO MORE THAN 10 FEET OF EVAPORATOR).

ALL COLDZONE EVAPORATORS WITH FACTORY MOUNTED LEAK DETECTION FOR A2L MITIGATION

ELECTRICAL INSTALLATION (C) FS7.1

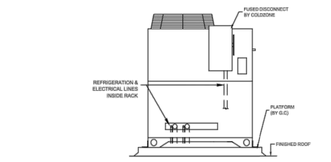

COLDZONE EVAPORATOR COILS (D) FS7.1
LOW PROFILE

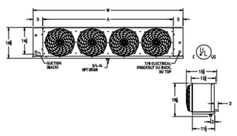

EVAPORATOR COIL(S) INCHES							
MODEL NUMBER	QTY	FIGURE	NO. OF FANS	W	A	WEIGHT (LBS. EACH)
CAL6A08ADA	1	1	2	43-5/8	33-1/4	52
CAL6E129DDA	1	1	2	43-5/8	33-1/4	62

PIPE THROUGH WALK-IN PANEL (E) FS7.1

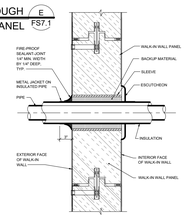

REFRIGERATION SYSTEM ELECTRICAL SCHEDULE / POWER SUPPLIED BY ELECTRICAL CONTRACTOR

SYSTEM NO.	QTY.	DESCRIPTION	VOLTAGE/PH	AMPS	MCA	MOPD
26	1	MPL-2	208-230/3/60	33	37	50
A	1	CAL6A08ADA	115/1		15	20
B	1	CAL6E129DDA	208-230/1		15	20

ENGINEERING GUIDE TO SPECIFICATION FOR REMOTE REFRIGERATION PACKAGE MINI-PAK REFRIGERATION SYSTEM

THE REFRIGERATION PACKAGE SHALL BE A PRE-ENGINEERED AND FACTORY ASSEMBLED UNIT, TRADE NAME "MINI-PAK", AS MANUFACTURED BY COLDZONE, A DIVISION OF HEAT TRANSFER PRODUCTS GROUP, 9810 VINEYARD AVE. ONTARIO, CA 91761. PHONE: (800) 772-2633, FAX: (714) 329-8503.

CONTRACTOR SHALL FURNISH AND INSTALL, WHERE SHOWN ON PLANS, (1) COLDZONE U.L. APPROVED "MINI-PAK".

1. MINI-PAK REFRIGERATION SYSTEM
   THE ENTIRE UNIT IS TO BE WEATHER-PROOFED AND MINIMUM OF TWO COATS OF PAINT SHALL BE APPLIED TO MAKE THE UNIT RUST-PROOF. THE UNIT SHALL BE PROVIDED WITH MULTI-CIRCUITED AIR-COOLED CONDENSER FOR COOLER, FREEZER AND ICE MACHINES. SUCTION LINE FOR LOW TEMPERATURE UNIT MUST BE INSULATED WITH ARMAFLEX.
2. DESIGNATION UNITS
   A. REFRIGERATION UNITS SHALL BE PROVIDED WITH EVERY COMPRESSOR.
   B. AIR-COOLED CONDENSING UNITS SHALL BE SEMI-HERMETIC, HERMETIC OR GLACIER SCROLL TYPE (COPELAND). EACH UNIT SHALL BE EQUIPPED WITH HIGH-LOW PRESSURE CONTROL, LIQUID LINE DRIER, SIGHT GLASS, SUCTION AND DISCHARGE VIBRATION ELIMINATOR, AND HEAD PRESSURE CONTROL.
   C. ALL COMPRESSOR UNITS SHALL BE NEW AND FACTORY ASSEMBLED TO OPERATE WITH THE REFRIGERANT SPECIFIED IN THE ENGINEERING SUMMARY SHEET.
3. PRE-PIPING
   A. ALL COPPER TUBING TO BE REFRIGERANT GRADE A.C.R. OR TYPE "L".
   B. ALL TUBING SHALL BE SECURELY SUPPORTED AND ANCHORED WITH CLAMPS.
   C. ALL REFRIGERANT LINES SHALL BE EXTENDED TO ONE SIDE OF THE PACKAGE IN A NEAT AND ORDERLY MANNER.
   D. SILVER SOLDER AND/OR SIL-FOS SHALL BE USED FOR ALL REFRIGERANT PIPING. SOFT SOLDER IS NOT ACCEPTABLE.
   E. ALL PIPING TO BE PRESSURE TESTED WITH NITROGEN AT 300 PSI. AFTER THE CONDENSING UNIT AND COIL HAVE BEEN CONNECTED, THE BALANCE OF THE SYSTEM SHALL BE LEAK TESTED WITH ALL VALVES OPEN.
4. CONTROL PANEL
   A. THE PACKAGE SHALL HAVE FACTORY MOUNTED AND PRE-WIRED CONTROL PANEL COMPLETE WITH INTERLOCKED MAIN FUSED DISCONNECT, COMPRESSOR CIRCUIT BREAKERS, CONTACTORS AND TIME CLOCKS WIRED FOR SINGLE POINT POWER CONNECTION.
   B. ELECTRICAL CONTRACTOR SHALL PROVIDE AND INSTALL MAIN POWER LINES TO PANEL, AND USE WIRE HARNESS WIRING FOR CONTROL AND DEFROST HEATER BETWEEN THE DEFROST CLOCK AND THE REFRIGERATION FIXTURES, ALL IN ACCORDANCE WITH THE WIRING DIAGRAM AND LOCAL CODES.

GENERAL NOTES

1. GENERAL CONTRACTOR
   A. CONTRACTORS SHALL VERIFY ALL DIMENSIONS AND COORDINATE WITH OTHER TRADES.
   B. GENERAL CONTRACTOR SHALL PREPARE AND WEATHERPROOFING THE PLATFORM AND CURBED OPENINGS.
2. REFRIGERATION CONTRACTOR
   A. ALL PIPING SHALL BE EVACUATED WITH VACUUM PUMP.
   B. ALL COPPER TUBING TO BE REFRIGERANT GRADE A.C.R. OR TYPE "L".
   C. CHARGE, TEST, AND ADJUST EACH UNIT TO BE IN AN OPERATIONAL SYSTEM.
   D. SILVER SOLDER AND/OR SIL-FOS SHALL BE USED FOR ALL REFRIGERANT PIPING. SOFT SOLDER IS NOT
   E. ALL PIPING TO BE PRESSURE TESTED WITH NITROGEN AT 300 PSI. AFTER THE CONDENSING UNIT AND COIL HAVE BEEN CONNECTED, THE BALANCE OF THE SYSTEM SHALL BE LEAK TESTED WITH ALL VALVES OPEN.
   F. REFRIGERATION CONTRACTOR TO PROVIDE AND INSTALL DRAIN LINE HEATER IN FREEZER TO BE CONNECTED BY ELECTRICAL CONTRACTOR
3. ELECTRICAL CONTRACTOR
   A. ELECTRICAL CONTRACTOR TO PROVIDE POWER FROM REFRIGERATION PACKAGE AND CONNECT CONTROL AND DEFROST SYSTEM AS CALLED FOR IN THE WIRING DIAGRAM.
   B. ALL ELECTRICAL WIRING AND INSTALLATION SHALL BE IN ACCORDANCE WITH THE WIRING DIAGRAM AND LOCAL CODES.
4. PLUMBING CONTRACTOR
   A. PLUMBING CONTRACTOR TO PROVIDE HARD A.C.R. OR TYPE "L" COPPER DRAIN LINES FOR WALK-IN REFRIGERATOR AND FREEZER, PITCHED 1/4" PER FOOT OF RUN. IN FREEZER, UNHEATED DRAIN LINE MUST BE OUTSIDE OF FREEZER WALL TO PREVENT FREEZING. TRAP DRAIN LINE OUTSIDE OF REFRIGERATED SPACE TO AVOID ENTRANCE OF WARM AND MOIST AIR.
   B. PLUMBING CONTRACTOR TO PROVIDE INDIVIDUAL DRAIN LINE FOR EACH EVAPORATOR UNLESS OTHERWISE CALLED FOR.
   C. ALL PLUMBING INSTALLATION SHALL BE IN ACCORDANCE WITH LOCAL CODES.

WIRING DIAGRAM FOR W/I COOLER EVAPORATOR COIL (F) FS7.1

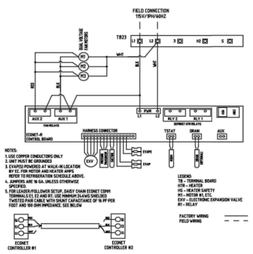

NOTES:
1. USE COPPER CONDUCTORS ONLY
2. UNIT MUST BE GROUNDED
3. EVAPO POWERED AT WALK-IN LOCATION
4. ALL WIRING MUST BE IN ACCORDANCE WITH NEC AND ALL LOCAL CODES UNLESS OTHERWISE SPECIFIED.
5. REFER TO REFRIGERATION SCHEDULE ABOVE.
6. FOR LEADED FOLLOWER SETUP, DAISY CHAIN ECONET COM+ TERMINALS ET, ET AND WT, USE MINIMUM 22 AWG SHIELDED TWISTED PAIR CABLE WITH SHUNT CAPACITANCE OF 16 PF PER FOOT AND 100 OHM IMPEDANCE. SEE BELOW

LEGEND:
TB – TERMINAL BOARD
HTR – HEATER
HS – HEATER SAFETY
TXV – THERMAL EXPANSION VALVE
EXV – ELECTRONIC EXPANSION VALVE
R – RELAY
FACTORY WIRING
FIELD WIRING

WIRING DIAGRAM FOR W/I FREEZER EVAPORATOR COIL (G) FS7.1

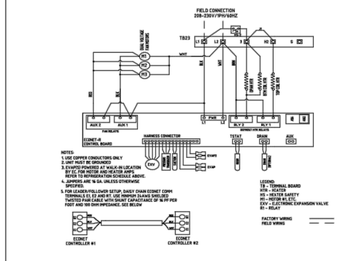

NOTES:
1. USE COPPER CONDUCTORS ONLY
2. UNIT MUST BE GROUNDED
3. EVAPO POWERED AT WALK-IN LOCATION
4. ALL WIRING MUST BE IN ACCORDANCE WITH NEC AND ALL LOCAL CODES UNLESS OTHERWISE SPECIFIED.
5. REFER TO REFRIGERATION SCHEDULE ABOVE.
6. FOR LEADED FOLLOWER SETUP, DAISY CHAIN ECONET COM+ TERMINALS ET, ET AND WT, USE MINIMUM 22 AWG SHIELDED TWISTED PAIR CABLE WITH SHUNT CAPACITANCE OF 16 PF PER FOOT AND 100 OHM IMPEDANCE. SEE BELOW

LEGEND:
TB – TERMINAL BOARD
HTR – HEATER
HS – HEATER SAFETY
TXV – THERMAL EXPANSION VALVE
EXV – ELECTRONIC EXPANSION VALVE
R – RELAY
FACTORY WIRING
FIELD WIRING

WIRING DIAGRAM FOR W/I FREEZER EVAPORATOR COIL (G) FS7.1

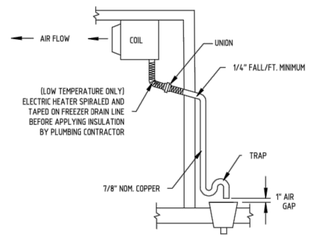

REVISIONS		
NO.	DESCRIPTION	DATE
0	Initial Release	9/15/2025

Drawing Number	Job Number
	24-0950
Date: 9/15/2025	Sheet Number
Drawn by: CB	R-1

AGENCY APPROVAL

EL DORADO MIDDLE SCHOOL
MULTI-PURPOSE BUILDING UPGRADES
1750 WEST ST., CONCORD, CA 94521
MT. DIABLO UNIFIED SCHOOL DISTRICT

AMD FOODSERVICE DESIGN
P.O BOX 163
GARDEN VALLEY, CA
95633
p. 530-333-4606
www.amdfoodservicedesign.com

CONSULTANT
nacht&lewis
600 Q Street, Suite 100
Sacramento, CA 95811
www.nachtlewis.com
916.329.4000

ARCHITECT

Project Name and Address
El Dorado MS
Concord, CA
0
MIT DIAGRAM/SCHEME

DATE

JOB NO. Y2326.00

SHEET TITLE

FOODSERVICE EQUIPMENT REMOTE REFRIGERATION

SHEET NO.

FS7.1

AD01-6

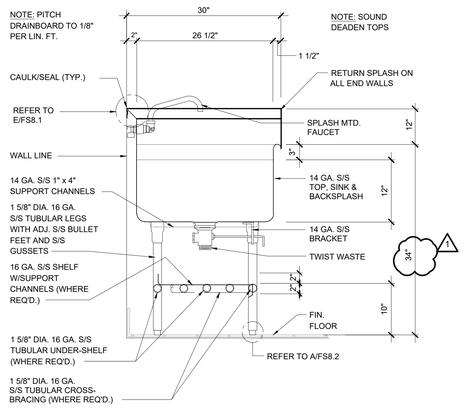

A SECTION AT POT SINK (INTEGRAL) NTS

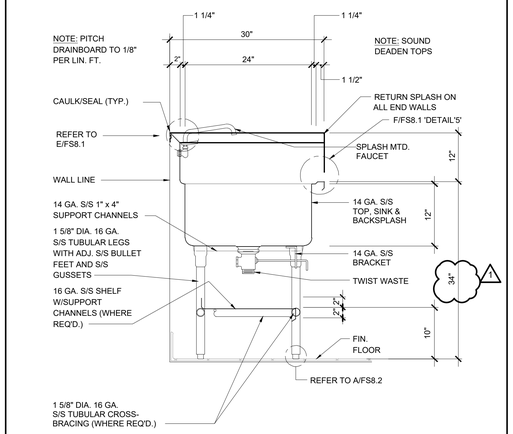

B SECTION AT PREP SINK NTS

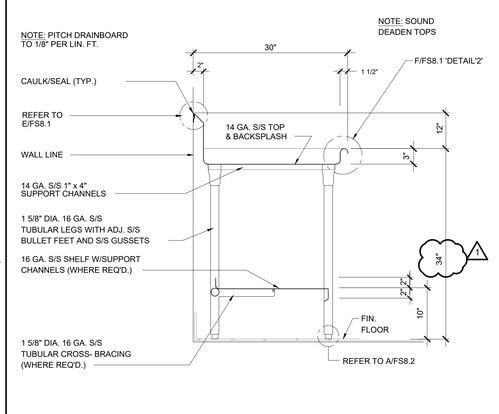

C SECTION AT DISHTABLE NTS

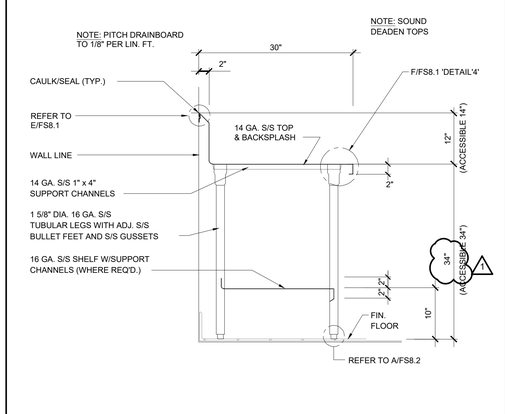

D SECTION AT WORKCOUNTER NTS

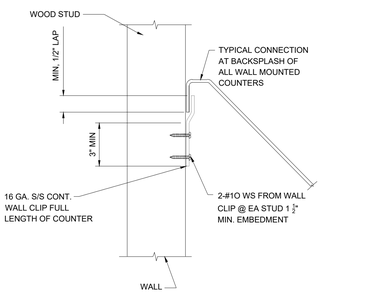

E ANCHORAGE AT BACKSPLASH NTS

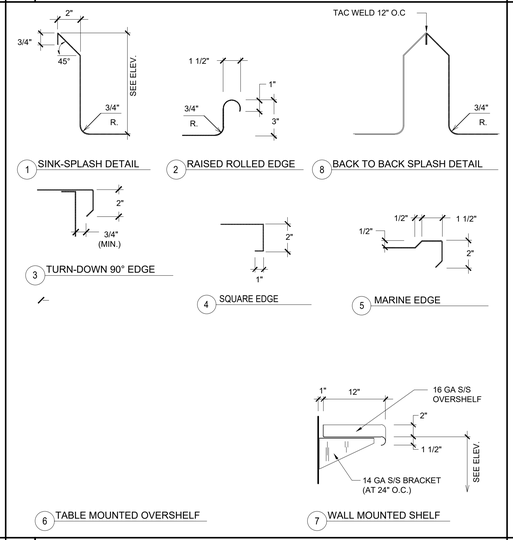

F EDGE/SPLASH/SHELF DETAILS NTS

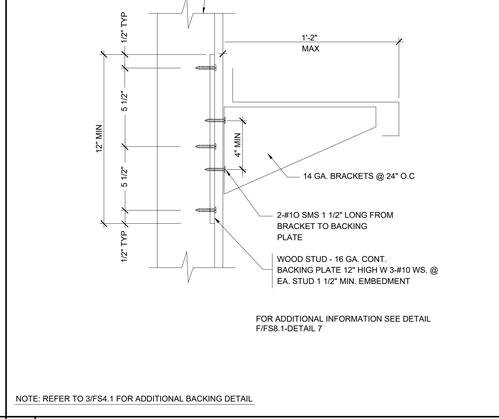

NOTE: REFER TO 3/FS4.1 FOR ADDITIONAL BACKING DETAIL

G WALL MOUNTED SHELF NTS

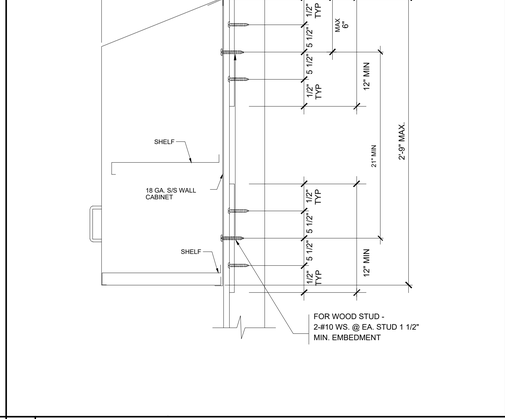

H WALL MOUNTED CABINET NTS

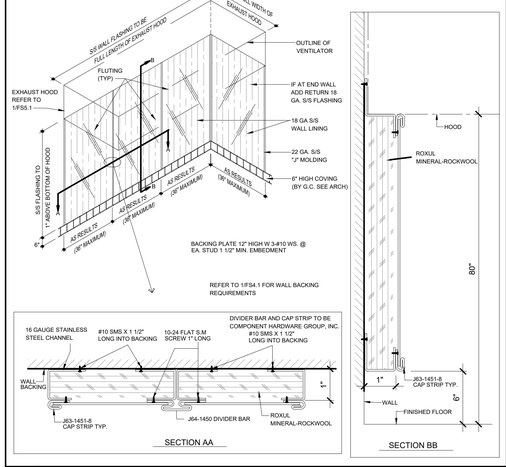

I S/S INSULATED WALL LINING DETAIL NTS

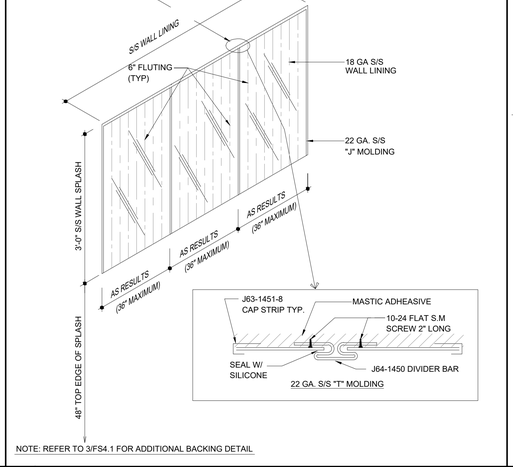

NOTE: REFER TO 3/FS4.1 FOR ADDITIONAL BACKING DETAIL

J WALL SPLASH NTS

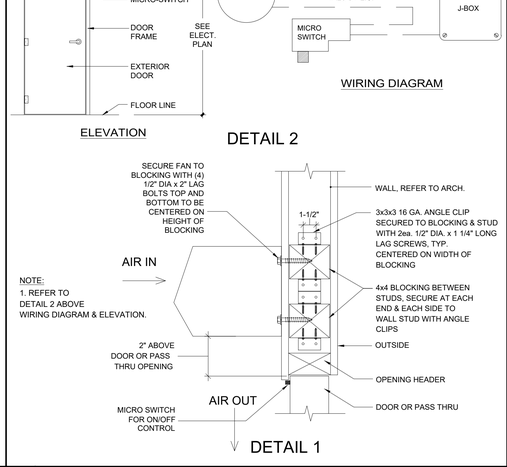

K AIR CURTAIN MTG & MICRO SWITCH DTL NTS

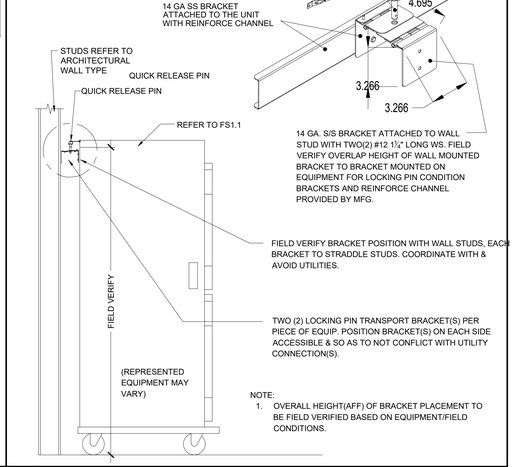

L MOBILE EQUIP. ANCHORAGE BRACKET NTS

AGENCY APPROVAL

EL DORADO MIDDLE SCHOOL
MULTI-PURPOSE BUILDING UPGRADES
1750 WEST ST, CONCORD, CA 94521
MT. DIABLO UNIFIED SCHOOL DISTRICT

AMD FOODSERVICE DESIGN
P.O BOX 163
GARDEN VALLEY, CA
95633
p. 530-333-4606
www.amdfoodservicedesign.com

CONSULTANT

nacht&lewis
600 Q Street, Suite 100
Sacramento, CA 95811
www.nachtlewis.com
916.329.4000

ARCHITECT

REVISIONS

NO.	DESCRIPTION	DATE

DATE

JOB NO. Y2326.00

SHEET TITLE

FOODSERVICE EQUIPMENT ANCHORAGE DETAILS

SHEET NO.

FS8.1

AD01-7

ONE AND ONE-HALF INCH = ONE FOOT
ONE INCH = ONE FOOT
THREE-QUARTERS INCH = ONE FOOT
ONE-HALF INCH = ONE FOOT
ONE-QUARTER INCH = ONE FOOT
ONE-EIGHTH INCH = ONE FOOT
ONE-SIXTEENTH INCH = ONE FOOT
ONE INCH = TWENTY FEET

ONE AND ONE-HALF INCH = ONE FOOT
ONE INCH = ONE FOOT
THREE-QUARTERS INCH = ONE FOOT
ONE-HALF INCH = ONE FOOT
ONE-QUARTER INCH = ONE FOOT
ONE-EIGHTH INCH = ONE FOOT
ONE-SIXTEENTH INCH = ONE FOOT
ONE INCH = TWENTY FEET

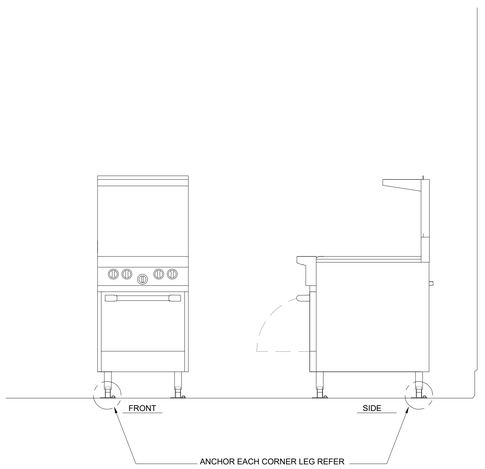

A RANGE NTS

B SPARE NTS

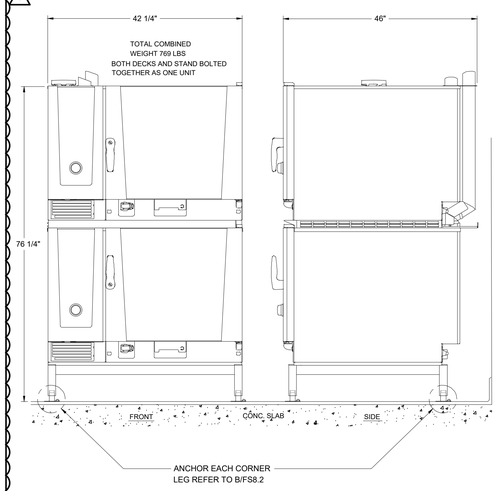

C DOUBLE STACK CONVECTION OVEN NTS

D SPARE NTS

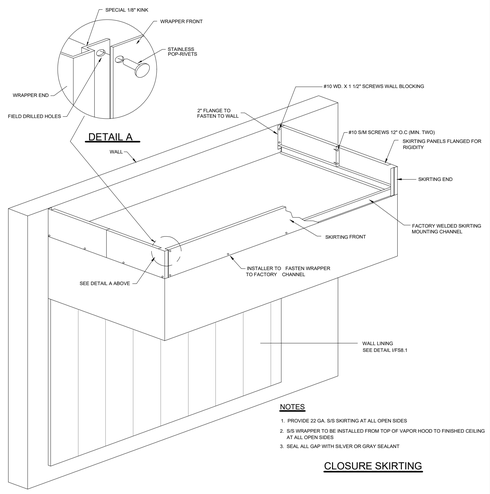

E CLOSURE SKIRTING AT HOOD

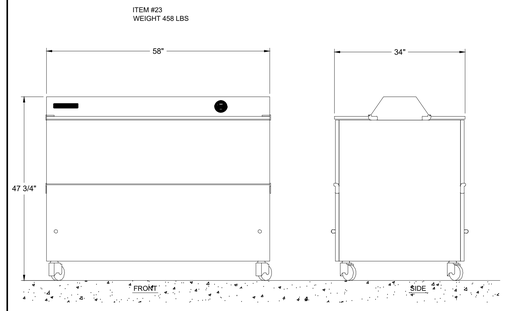

F MOBILE MILK COOLER

G SPARE

H SPARE

SPARE

I

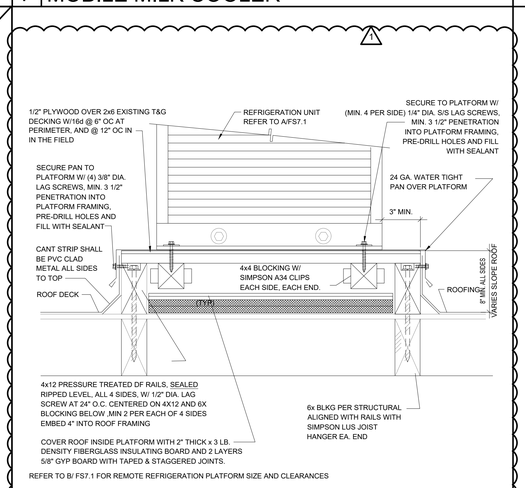

J PLATFORM DETAIL

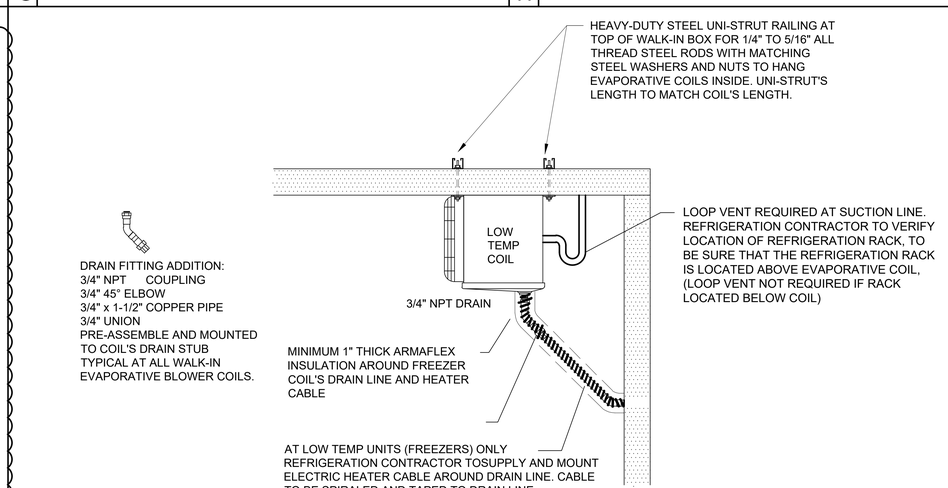

K COIL DRAIN LINE DETAIL & ANCHORAGE DETAIL

AGENCY APPROVAL

EL DORADO MIDDLE SCHOOL
MULTI-PURPOSE BUILDING UPGRADES

1750 WEST ST, CONCORD, CA 94521

MT. DIABLO UNIFIED SCHOOL DISTRICT

AMD FOODSERVICE DESIGN
P.O BOX 163
GARDEN VALLEY, CA
95633
p. 530-333-4606
www.amdfoodservicedesign.com

CONSULTANT

nacht&lewis
600 Q Street, Suite 100
Sacramento, CA 95811
www.nachtlewis.com
916.329.4000

ARCHITECT

REVISIONS

NO.	DESCRIPTION	DATE

DATE

JOB NO. Y2326.00

SHEET TITLE

FOODSERVICE
EQUIPMENT
ANCHORAGE
DETAILS

SHEET NO.

FS8.3

AD01-8

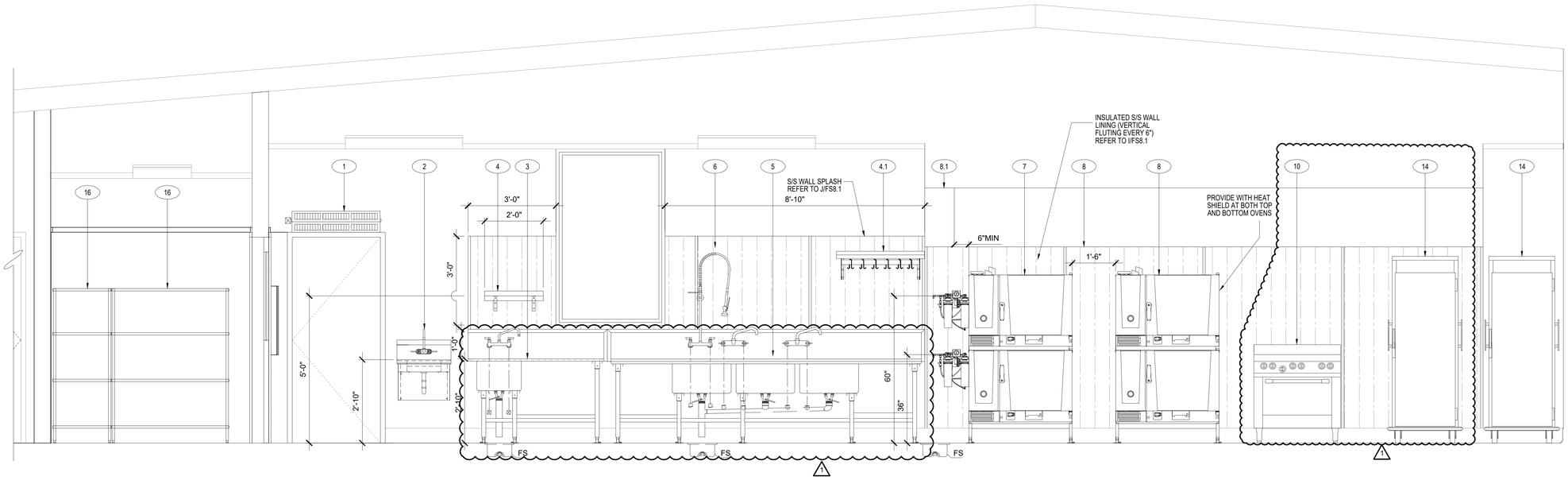

ELEVATION

SCALE : NTS

A
FS9.1

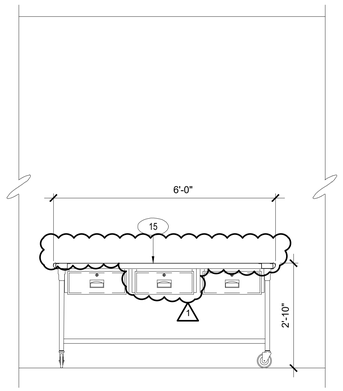

ELEVATION 1

SCALE : NTS

FS9.1

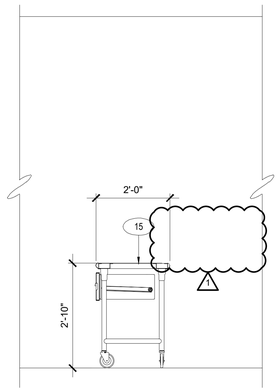

ELEVATION 2

SCALE : NTS

FS9.1

EQUIPMENT SCHEDULE

ITEM NO	EQUIPMENT CATEGORY	ITEM NO	EQUIPMENT CATEGORY
1	AIR CURTAIN, UNHEATED	9	HAND SINK, WALL MOUNT
2	SINK, HAND, WALL MOUNT	10	GAS RESTAURANT RANGE
3	PREPERATION SINK	11	BROILER, UNDER-FIRED, GAS, COUNTER
4	WALL MOUNTED SHELF	12	STAND, EQUIPMENT
4.1	WALL MOUNTED SHELF W/ POT RACK	13	GRIDDLE, GAS
5	THREE COMP. SINK	14	MOBILE WARMING & HOLDING CABINET
6	PRE-RINSE FAUCET, BACKSPLASH MOUNT	15	MOBILE WORK TABLE
7	DOUBLE STACK COMBI OVEN	16	DRY STORAGE SHELVING
8	EXHAUST HOOD	16.1	DRY STORAGE SHELVING
8.1	FIRE SYSTEM		

ELEVATION LEGEND			
SYMBOL	DESCRIPTION	SYMBOL	DESCRIPTION
#	ITEM NUMBER REFER TO FS1.1 FOR LOCATION		
	WALL MOUNTED SHELF BRACKET REFER TO G/FS8.1 FOR DETAIL		FLANGE FOOT ANCORAGE REFER TO B/FS8.2 FOR DETAIL
		FS	FLOOR SINK REFER TO FS2.1 FOR LOCATION

AGENCY APPROVAL

EL DORADO MIDDLE SCHOOL
MULTI-PURPOSE BUILDING UPGRADES

1750 WEST ST, CONCORD, CA 94521

MT. DIABLO UNIFIED SCHOOL DISTRICT

AMD FOODSERVICE DESIGN
P.O BOX 163
GARDEN VALLEY, CA
95633
p. 530-333-4606
www.amdfoodservicedesign.com

CONSULTANT

nacht&lewis
600 Q Street, Suite 100
Sacramento, CA 95811
www.nachtlewis.com
916.329.4000

ARCHITECT

REVISIONS

NO.	DESCRIPTION	DATE

DATE

JOB NO. Y2326.00

SHEET TITLE

FOODSERVICE EQUIPMENT ELEVATIONS

SHEET NO.

FS9.1

AD01-9

ONE AND ONE-HALF INCH = ONE FOOT
ONE INCH = ONE FOOT
THREE-QUARTERS INCH = ONE FOOT
ONE-HALF INCH = ONE FOOT
ONE-QUARTER INCH = ONE FOOT
ONE-EIGHTH INCH = ONE FOOT
ONE-SIXTEENTH INCH = ONE FOOT
ONE INCH = TWENTY FEET

L:\2017\17007.001\200\Drawings\200 AutoCAD Project Files\FS9.01.DWG - TB - December 13, 2017

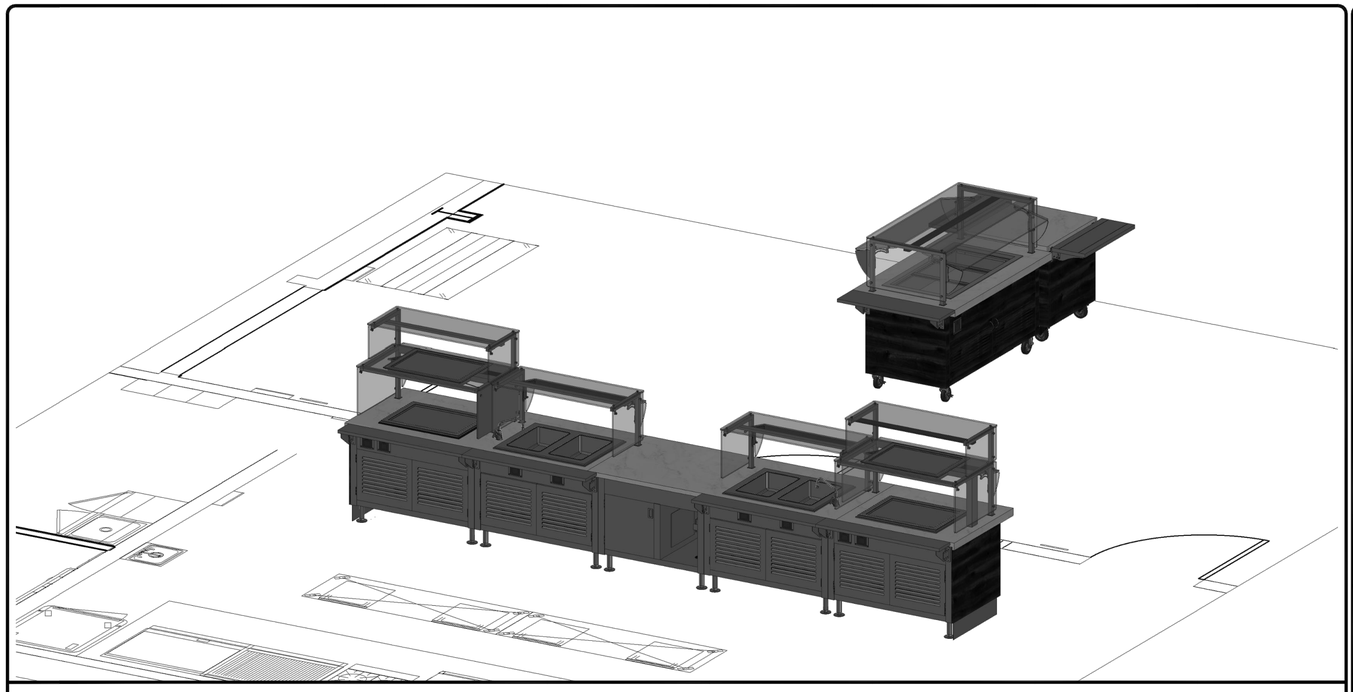

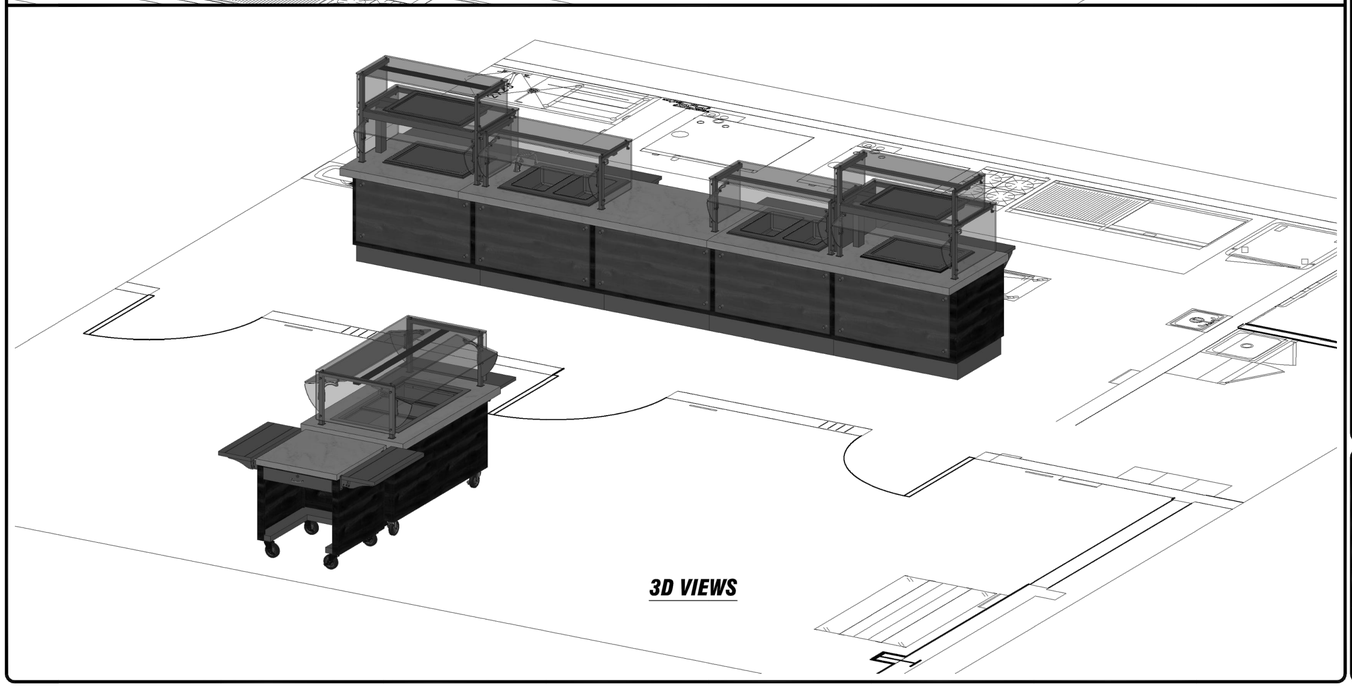

3D VIEWS

THIS DRAWING AND THE INFORMATION AND DATE CONTAINED HEREIN ARE THE CONFIDENTIAL AND PROPRIETARY PROPERTY OF DUKE MANUFACTURING CO., AND MAY NOT BE REPRODUCED OR DISCLOSED FOR ANY PURPOSE, WITHOUT THE WRITTEN PERMISSION OF DUKE MANUFACTURING CO.

STANDARD SERVING SYSTEM PRACTICES

SOLID SURFACE TOPS AND TRAY SLIDES

- ALL SOLID SURFACE TOPS AND TRAY SLIDES, WITH FIELD SEAMS, ***WILL SHIP LOOSE***, WHEN SPANNING MORE THAN ONE UNIT.
- SOLID SURFACE TOPS AND TRAY SLIDES SPECIFIC TO SINGLE UNIT WILL SHIP INSTALLED.
- SOLID SURFACE TOPS AND TRAY SLIDES REQUIRE A ***CERTIFIED*** INSTALLER, SPECIFIC TO THE BRAND, TO SEAM THE UNITS IN THE FIELD DURING PRODUCT INSTALLATION.

STAINLESS STEEL TOPS AND TRAY SLIDES

- THE MAXIMUM CONTINUOUS STAINLESS STEEL TOP LENGTH IS 144" [12'-0"], BEFORE REQUIRING A BOLTED OR WELDED FIELD JOINT.
- THE MAXIMUM CONTINUOUS STAINLESS STEEL TRAY SLIDE LENGTH IS 144" [12'-0"], BEFORE REQUIRING A BOLTED OR WELDED FIELD JOINT.
- BOLTED OR WELDED FIELD JOINTS ARE REQUIRED, AT ALL MITERED TRAY SLIDE CORNERS.

ALLOWANCE FOR FIELD CONDITIONS

- FACTORY TO ALLOW ¼" AT ALL WALLS, COLUMNS, AND PASS THROUGH WINDOWS FOR FIT. ***(SEE WALL TO WALL AND COLUMN EXAMPLES)***

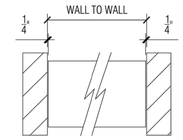

WALL TO WALL EXAMPLE

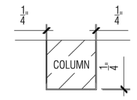

COLUMN EXAMPLE

ELECTRICAL

- ALL 15 AMP (NEMA #5-15R) AND 20 AMP (NEMA #5-20R) RECEPTACLES SHALL BE GFCI (GROUND FAULT CIRCUIT INTERRUPTER) TYPE RECEPTACLES PER DUKE MANUFACTURING STANDARD. ***UNLESS SPECIFICALLY NOTED OTHERWISE*** ON THE DRAWING. ***(SEE SYMBOL LEGEND)***

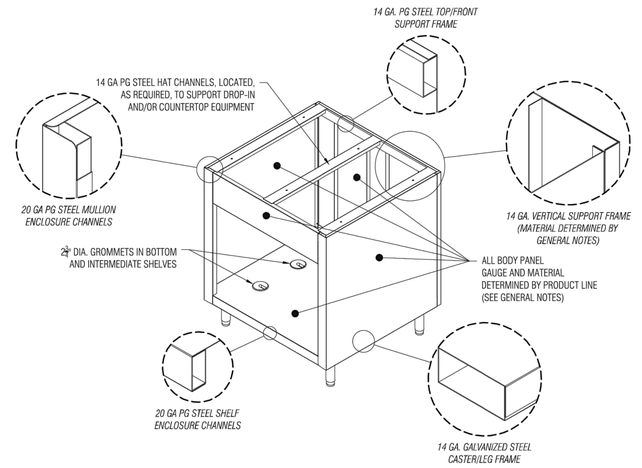

STANDARD CHANNEL BODY CONSTRUCTION

SYMBOL LEGEND

DESCRIPTION	SYMBOL	DESCRIPTION	SYMBOL	DESCRIPTION	SYMBOL
SIMPLEX RECEPTACLE		DUPLEX GFCI RECEPTACLE (NEMA 5-15R & 5-20R ONLY)		ELEC. CORD AND PLUG	
KICKPLATE LOCATION	K	3 FORM PANEL LOCATION	3F	DECOR PANEL LOCATION	DP
EQUIPMENT TAG	#	FIELD JOINT LOCATION	FJ	2" GROMMET LOCATION	
VIEW TAG	VIEW NUMBER / PAGE NUMBER — 1 PLAN / X SCALE — VIEW NAME / VIEW SCALE				
VIEW ARROWS	X / X			COMPRESSOR WITH REMOVABLE GRILLE	

Your Solutions Partner
©2017 Duke Manufacturing Co.
DUKE MANUFACTURING COMPANY
2305 North Broadway
St. Louis, MO 63102
Ph (314) 231-1130
Fax (314) 231-5074

SUBMITTAL

APPROVED AS SUBMITTED
APPROVED AS NOTED
REVISE AND RESUBMIT (AR APPROVAL)
REVISE AND RESUBMIT (AR APPROVAL)
DATE
BY (AUTHORIZED SIGNATURE)

THIS DRAWING MUST BE SIGNED AND RETURNED TO DUKE MANUFACTURING PRIOR TO BEING RELEASED FOR MANUFACTURING. ALL DIMENSIONS AND CONDITIONS SHOWN ON THIS DRAWING MUST BE CONFIRMED BY THE PURCHASER TO BE CORRECT AND MADE THAT RATES ARE EACH IF NOT INSTALLED AND EQUIPMENT WILL NOT BE ACCEPTED AFTER FABRICATION. DUKE ASSUMES NO RESPONSIBILITY FOR ANY DISCREPANCIES WHICH SHOULD HAVE BEEN DISCOVERED BY THE PURCHASER AND WHICH ARE NOT CALLED TO OUR ATTENTION IN WRITING BEFORE THIS DRAWING IS RETURNED. ALL ASPECTS OF DRAWINGS, INCLUDING FIELD DIMENSIONS, AND HAS NOTED ANY EXCEPTIONS.

REV.	DATE	BY
A	10/18/2024	DTM
B	09/18/2025	CAB

DESIGNED FOR: EL DORADO MIDDLE SCHOOL
DESIGNED BY: INFORM MARKETING GROUP

DRAWN BY: MAC
ESTIMATOR: C. BINGAMAN
PURCHASE ORDER #: N/A
SALES ORDER: N/A
DATE: 1/11/2024
DRAWING NO. : SD-147549
SHEET: 1
OF: 5

AGENCY APPROVAL

EL DORADO MIDDLE SCHOOL
MULTI-PURPOSE BUILDING UPGRADES

1750 WEST ST, CONCORD, CA 94521

MT. DIABLO UNIFIED SCHOOL DISTRICT

AMD FOODSERVICE DESIGN
P.O BOX 163
GARDEN VALLEY, CA
95633
p. 530-333-4606
www.amdfoodservicedesign.com

CONSULTANT

nacht&lewis
600 Q Street, Suite 100
Sacramento, CA 95811
www.nachtlewis.com
916.329.4000

ARCHITECT

REVISIONS

NO.	DESCRIPTION	DATE

DATE

JOB NO. Y2326.00

SHEET TITLE

FOODSERVICE EQUIPMENT SERVING LINE

SHEET NO.

FS9.2

AD01-10

ONE AND ONE-HALF INCH = ONE FOOT
ONE INCH = ONE FOOT
THREE-QUARTERS INCH = ONE FOOT
ONE-HALF INCH = ONE FOOT
ONE-QUARTER INCH = ONE FOOT
ONE-EIGHTH INCH = ONE FOOT
ONE-SIXTEENTH INCH = ONE FOOT
ONE INCH = TWENTY FEET

L:\2017\17007.001\3D\Drawings\3D5 AutoCAD Project Files\FS9.0 DWG - TS - December 15, 2017

ONE AND ONE-HALF INCH = ONE FOOT
ONE INCH = ONE FOOT
THREE-QUARTERS INCH = ONE FOOT
ONE-HALF INCH = ONE FOOT
ONE-QUARTER INCH = ONE FOOT
ONE-EIGHTH INCH = ONE FOOT
ONE-SIXTEENTH INCH = ONE FOOT
ONE INCH = TWENTY FEET

L:\2017\170507.00\1200\Drawings\2020 AutoCAD Project Files\FS9.01.DWG, 7/3 - December 15, 2017

GENERAL NOTES

THIS DRAWING AND THE INFORMATION AND DATE CONTAINED HEREIN ARE THE CONFIDENTIAL AND PROPRIETARY PROPERTY OF DUKE MANUFACTURING CO., AND MAY NOT BE REPRODUCED OR DISCLOSED FOR ANY PURPOSE, WITHOUT THE WRITTEN PERMISSION OF DUKE MANUFACTURING CO.

THE FOLLOWING MUST BE VERIFIED PRIOR TO CONSTRUCTION

- ANY DECOR COLOR CHOICES INCLUDING LAMINATE, PAINT COLOR, OR CUSTOM DECOR FEATURES, IF APPLICABLE
- ALL ELECTRICAL VOLTAGE AND PHASE OF DUKE HOT FOOD UNITS AND BUYOUT EQUIPMENT IF APPLICABLE
- ALL CRITICAL FIELD DIMENSION IF ANY AS INDICATED IN PLAN VIEW.

EXPRESSIONS SERVING SYSTEMS

TOPS

EXTENDED 2CM QUARTZ TOPS ON 3/4" EXTERIOR GRADE WOOD BACKER WITH CONTINUOUS TOPS

* QUARTZ BRAND : .....CAMBRIA

* QUARTZ COLOR NAME : .....COLTON

* QUARTZ COLOR NUMBER: .....MATTE

ALL DROP-INS TO INCLUDE 16GA. STAINLESS STEEL TRIM RING

BODIES & INTERIORS

14 GA. FRAME/SUPPORTS W/ 20 GA. STAINLESS STEEL ENCLOSURE CHANNELS, BODY PANELS AND INTERIOR SHELVES.

LAMINATED DECOR PANELS

REMOVABLE VERTICAL FRONT/END PANELS SHALL BE ¾" PLYWOOD BACKER COVERED WITH PLASTIC LAMINATE. TO INCLUDE STAINLESS STEEL TRIM
*****LAMINATE GRAIN (IF ANY) RUNS HORIZONTAL*****

*LAMINATE TO BE : .....WILSONART

*LAMINATE ID NUMBER : Y0761K-16

*LAMINATE COLOR NAME : .....CHARRED MAPLE

ACRYLIC 3FORM DECOR PANELS

3-FORM DESIGN TO BE:

*TYPE:.....3/8" THICK

*TEXTURE:.....STRUCK

*STYLE:.....CHAMOMILE

*FINISH:.....SANDSTONE

CASTERS - ITEMS 20.1 & 24

5"Ø CASTERS WITH GRAY POLYURETHANE TIRES. ALL SWIVEL WITH BRAKES.

LEGS

6" HIGH, 1 5/8"Ø STAINLESS STEEL TUBULAR LEGS WITH ADJUSTABLE FLANGED FEET.

KICKPLATES

HEAVY GAUGE STAINLESS STEEL KICK PLATES LOCATED/INDICATED BY DRAWING;

NSF-7 COLD PANS

NSF STANDARD #7 COLD PAN TO HOLD FOOD PANS RECESSED 3" BELOW TOP ON S.S. REMOVABLE BRACKETS & ADAPTER BARS

BREATHGUARDS - BGA SERIES

1-1/4" SQUARE STAINLESS STEEL TUBING POSTS, MOUNTED THROUGH TOP WITH ⅜", TEMPERED, CLEAR GLASS SHELVES, AND PROTECTORS.
WITH #4 BRUSHED GRAIN FINISH WITH HIGH POLISH, HIGHLIGHTED EDGES

DUKE EQUIPMENT

Item Tag	Quantity	Model Number	Description	Voltage	Phase	Watts	Amps	NEMA #'S Intl. Conn. / Final Conn.	Cord length	Gas Type
20.1	1	TST-60SS	SOLID TOP UNIT	-	-	-	-	NEMA# 5-15P	Cord 6'	Gas Type -
20.1.1	1	CP3-SB-DC-D	COLD FOOD DROP-IN UNIT W/ CONDENSATE EVAPORATOR	120	1	936	7.8	NEMA# 5-15P	Cord 6'	Gas Type -
20.1a	1	BGA1-60-DS	DUAL SIDED ADJUSTABLE GLASS SNEEZE GUARD SINGLE OVERSHELF WITH LED LIGHTS	120	1	30	0.25	NEMA# 5-15P	Cord 6'	Gas Type -
20A	1	TST-46SS	SOLID TOP UNIT	-	-	-	-	NEMA# -	Cord -	Gas Type -
20A.1	1	DE-RHF1-SL-HF01-SL	DUPLEX EVPORATOR HOT FROST DROP-IN	120	1	1068	8.9	NEMA# 5-15P	Cord 6'	Gas Type -
20Aa	1	BGA2-46-SS	ADJUSTABLE GLASS SNEEZE GUARD DUAL TIER OVERSHELF WITH LED LIGHTS	120	1	30	0.25	NEMA# 5-15P	Cord 6'	Gas Type -
20B	1	TST-46SS	SOLID TOP UNIT	-	-	-	-	NEMA# -	Cord -	Gas Type -
20B.1	1	DE-RHF1-SL-HF01-SL	DUPLEX EVPORATOR HOT FROST DROP-IN	120	1	1068	8.9	NEMA# 5-15P	Cord 6'	Gas Type -
20Ba	1	BGA2-46-SS	ADJUSTABLE GLASS SNEEZE GUARD DUAL TIER OVERSHELF WITH LED LIGHTS	120	1	30	0.25	NEMA# 5-15P	Cord 6'	Gas Type -
21A	1	TST-46SS	SOLID TOP UNIT	-	-	-	-	NEMA# -	Cord -	Gas Type -
21A.1	1	HCF-2	HOT/COLD/FREEZE DROP-IN SEALED WELLS WITH DRAINS	120	1	1284	10.7	NEMA# 5-15P	Cord 6'	Gas Type -
21Aa	1	BGA1-46	ADJUSTABLE GLASS SNEEZE GUARD SINGLE OVERSHELF WITH LED LIGHTS	120	1	30	0.25	NEMA# 5-15P	Cord 6'	Gas Type -
21B	1	TST-46SS	SOLID TOP UNIT	-	-	-	-	NEMA# -	Cord -	Gas Type -
21B.1	1	HCF-2	HOT/COLD/FREEZE DROP-IN SEALED WELLS WITH DRAINS	120	1	1284	10.7	NEMA# 5-15P	Cord 6'	Gas Type -
21Ba	1	BGA1-46	ADJUSTABLE GLASS SNEEZE GUARD SINGLE OVERSHELF WITH LED LIGHTS	120	1	30	0.25	NEMA# 5-15P	Cord 6'	Gas Type -
22	1	TST-46SS	SOLID TOP UNIT W/ **LOAD CENTER - A**	120	1	4824	40.2	NEMA# -	Cord -	Gas Type -
24	1	TCS-30SS	CASHIER UNIT	'	-	-	-	NEMA# -	Cord -	Gas Type -

DUKE EQUIPMENT

Item Tag	Quantity	Model Number	Description	Voltage	Phase	Watts	Amps	NEMA #'S Intl. Conn. / Final Conn.	Cord Length

BUY-OUT EQUIPMENT

Item Tag	Quantity	Model Number	Description	Voltage	Phase	Watts	Amps

Duke
Your Solutions Partner
©2017 Duke Manufacturing Co.
DUKE MANUFACTURING COMPANY
2305 North Broadway
St. Louis, MO 63102
Ph (314) 231-1130
Fax (314) 231-5074

SUBMITTAL

APPROVED AS SUBMITTED
APPROVED AS NOTED
REVISE AND RESUBMIT FOR APPROVAL
REVISE AND RESUBMIT FOR CONSTRUCTION

SIGNATURE

DATE

THIS DRAWING MUST BE SIGNED AND RETURNED TO DUKE MANUFACTURING PRIOR TO BEING RELEASED FOR MANUFACTURING. ALL DIMENSIONS AND CONDITIONS SHOWN ON THIS DRAWING MUST BE VERIFIED IN THE FIELD BY THE CONTRACTOR. IT IS THE RESPONSIBILITY OF THE CONTRACTOR TO NOTIFY DUKE MANUFACTURING OF ANY DISCREPANCIES THAT MAY AFFECT THE USE OF THE EQUIPMENT AS SHOWN ON THIS DRAWING. DUKE MANUFACTURING ASSUMES NO RESPONSIBILITY FOR ANY CONSTRUCTION PERFORMED PRIOR TO THE RECEIPT OF APPROVED DRAWINGS. DUKE MANUFACTURING ASSUMES NO RESPONSIBILITY FOR ANY CONSTRUCTION PERFORMED PRIOR TO THE RECEIPT OF APPROVED DRAWINGS. ALL ASPECTS OF DRAWINGS, INCLUDING FIELD DIMENSIONS, AND NOTES MUST BE ACCEPTABLE.

REV.	DATE	BY
A	10/18/2024	DTM
B	09/18/2025	CAB

DESIGNED FOR: EL DORADO MIDDLE SCHOOL
DESIGNED BY: INFORM MARKETING GROUP

DRAWN BY: MAC
ESTIMATOR: C. BINGAMAN
PURCHASE ORDER #: N/A
SALES ORDER: N/A
DATE: 1/11/2024
DRAWING NO. : SD-147549
SHEET: OF: 5 2

AGENCY APPROVAL

EL DORADO MIDDLE SCHOOL
MULTI-PURPOSE BUILDING UPGRADES

1750 WEST ST, CONCORD, CA 94521

MT. DIABLO UNIFIED SCHOOL DISTRICT

AMD FOODSERVICE DESIGN
P.O BOX 163
GARDEN VALLEY, CA
95633
p. 530-333-4606
www.amdfoodservicedesign.com

CONSULTANT

nacht&lewis
600 Q Street, Suite 100
Sacramento, CA 95811
www.nachtlewis.com
916.329.4000

ARCHITECT

REVISIONS

NO.	DESCRIPTION	DATE

DATE

JOB NO. Y2326.00

SHEET TITLE

FOODSERVICE EQUIPMENT SERVING LINE

SHEET NO.

FS9.3

AD01-11

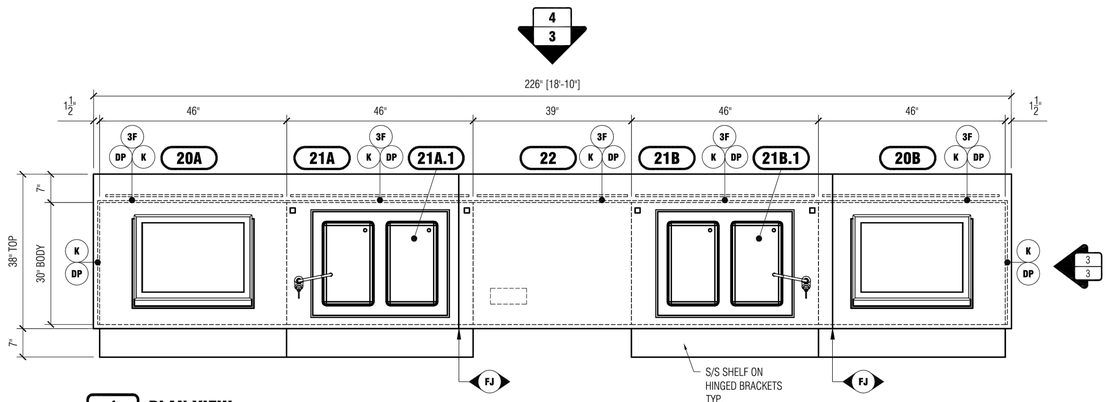

1 3 PLAN VIEW
3/8" = 1'-0"

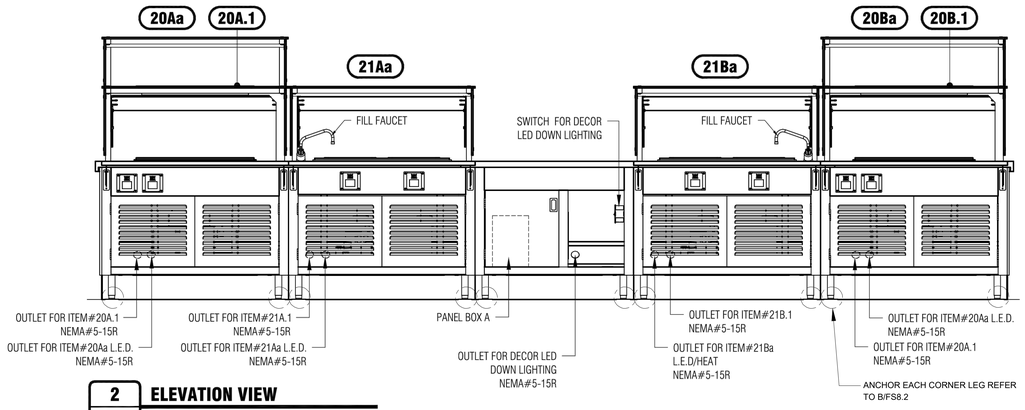

2 3 ELEVATION VIEW
3/8" = 1'-0"

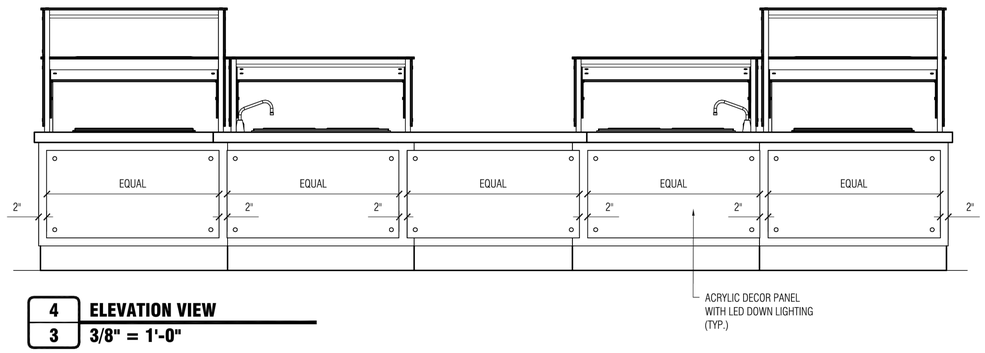

4 3 ELEVATION VIEW
3/8" = 1'-0"

CUSTOMER REFERENCE ONLY

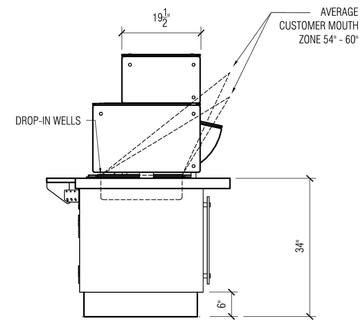

CUSTOMER REFERENCE ONLY

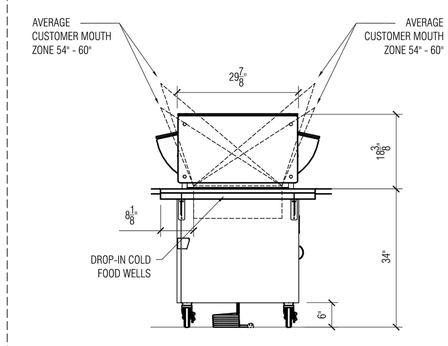

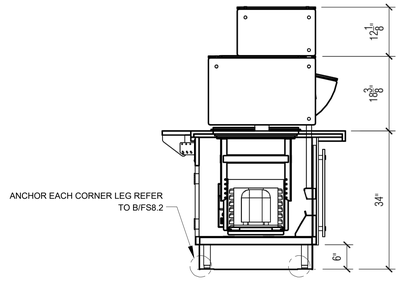

3 3 END VIEW
3/8" = 1'-0"

NOTE:

COMBINED WEIGHT OF SERVING COUNTER ITEM # 21, ITEM #22 AND ITEM#24 2,125 LBS ANCHOR ALL 20 LEGS

Your Solutions Partner
©2017 Duke Manufacturing Co.
DUKE MANUFACTURING COMPANY
2305 North Broadway
St. Louis, MO 63102
Ph (314) 231-1130
Fax (314) 231-5074

SUBMITTAL

APPROVED AS SUBMITTED
APPROVED AS NOTED
MAKE THAT NOTED AND RESUBMIT FOR APPROVAL
REVISE AND RESUBMIT FOR CONSTRUCTION
DATE
SIGNATURE AUTHORIZED SIGNATURE

THIS DRAWING MUST BE SIGNED AND RETURNED TO DUKE MANUFACTURING PRIOR TO BEING RELEASED FOR MANUFACTURING. PLEASE REVIEW ALL DIMENSIONS AND NOTES CAREFULLY. BY SIGNING THIS DRAWING YOU ARE MAKING THAT NOTED AND RESUBMIT AND DUKE MANUFACTURING COMPANY SHALL NOT BE RESPONSIBLE FOR ANY ERRORS OR OMISSIONS SHOWN ON THIS DRAWING AFTER IT HAS BEEN SIGNED. ALL ASPECTS OF DRAWINGS, INCLUDING FIELD DIMENSIONS, AND NOTES MUST BE CONFIRMED.

REV.	DATE	BY
A	10/18/2024	DTM
B	09/18/2025	CAB

DESIGNED FOR: EL DORADO MIDDLE SCHOOL
DESIGNED BY: INFORM MARKETING GROUP

DRAWN BY: MAC
ESTIMATOR: C. BINGAMAN
PURCHASE ORDER #: N/A
SALES ORDER: N/A
DATE: 1/11/2024
DRAWING NO.: SD-147549
SHEET: 3
OF: 5

AGENCY APPROVAL

EL DORADO MIDDLE SCHOOL
MULTI-PURPOSE BUILDING UPGRADES

1750 WEST ST, CONCORD, CA 94521

MT. DIABLO UNIFIED SCHOOL DISTRICT

AMD FOODSERVICE DESIGN
P.O BOX 163
GARDEN VALLEY, CA
95633
p. 530-333-4606
www.amdfoodservicedesign.com

CONSULTANT

nacht&lewis
600 Q Street, Suite 100
Sacramento, CA 95811
www.nachtlewis.com
916.329.4000

ARCHITECT

REVISIONS

NO.	DESCRIPTION	DATE

DATE

JOB NO. Y2326.00

SHEET TITLE

FOODSERVICE
EQUIPMENT
SERVING LINE

SHEET NO.

FS9.4

AD01-12

ONE AND ONE-HALF INCH = ONE FOOT
ONE INCH = ONE FOOT
THREE-QUARTERS INCH = ONE FOOT
ONE-HALF INCH = ONE FOOT
ONE-QUARTER INCH = ONE FOOT
ONE-EIGHTH INCH = ONE FOOT
ONE-SIXTEENTH INCH = ONE FOOT
ONE INCH = TWENTY FEET

L:\2017\170507.001\250\Drawings\7005 AutoCAD Project Files\FS9.01.DWG - TS - December 15, 2017

NOTE:
SNEEZE GUARDS NOT SHOWN IN PLAN VIEW

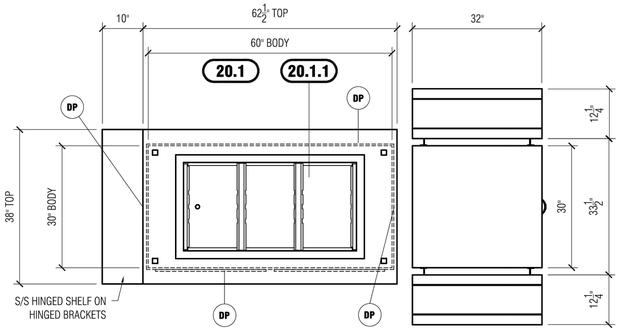

1/4 PLAN VIEW
3/8" = 1'-0"

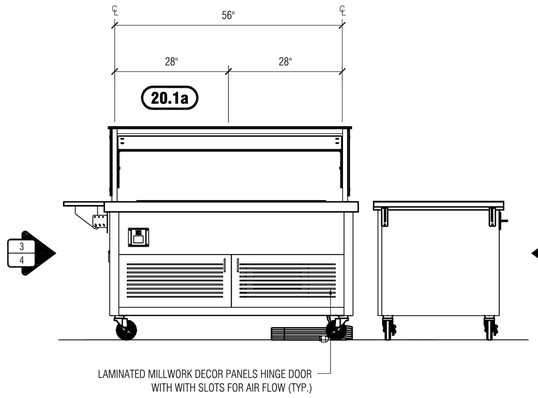

2/4 ELEVATION VIEW
3/8" = 1'-0"

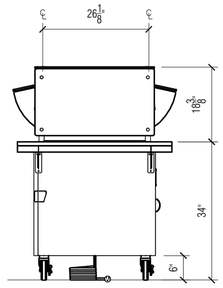

3/4 CUSTOMER ELEVATION
3/8" = 1'-0"

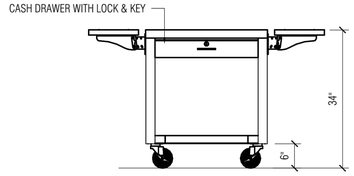

4/4 END VIEW
3/8" = 1'-0"



4/4 3D - PERSPECTIVE
NOT TO SCALE

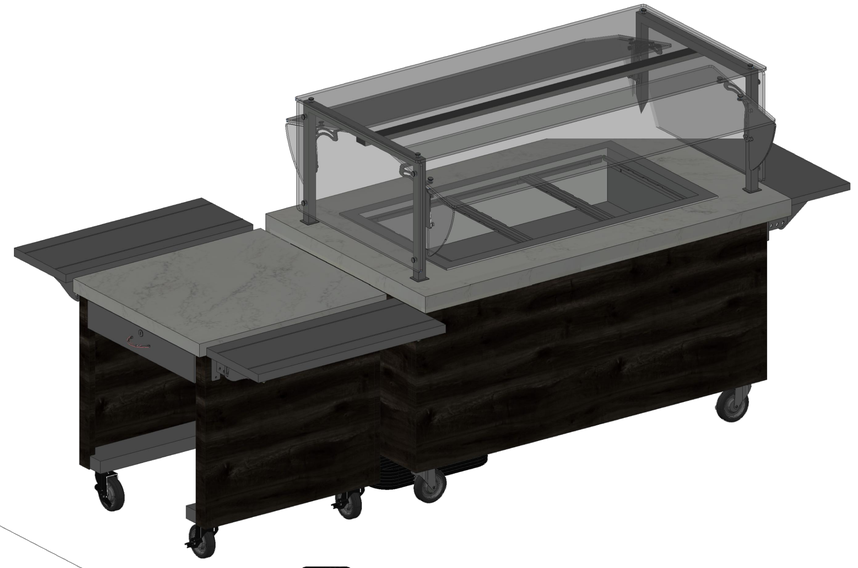

5/4 3D - PERSPECTIVE
NOT TO SCALE

Your Solutions Partner
©2017 Duke Manufacturing Co.

DUKE MANUFACTURING COMPANY
2305 North Broadway
St. Louis, MO 63102
Ph (314) 231-1130
Fax (314) 231-5074

SUBMITTAL

APPROVED AS SUBMITTED
APPROVED AS NOTED
MAKE CORRECTIONS NOTED
REVISE AND RESUBMIT FOR APPROVAL
REVISE AND RESUBMIT FOR SPECIFIED ITEMS

DATE

SIGNATURE AUTHORIZING EXCEPTIONS

THIS DRAWING MUST BE SIGNED AND RETURNED TO DUKE MANUFACTURING PRIOR TO BEING RELEASED FOR MANUFACTURING. ALL DIMENSIONS AND CONDITIONS MUST BE CONFIRMED AT JOB SITE BEFORE ANY EQUIPMENT IS MADE. ANY DUKE EQUIPMENT MANUFACTURED PRIOR TO RECEIPT OF APPROVED SHOP DRAWINGS IS MADE ON THE EXPRESS UNDERSTANDING THAT ANY DISCREPANCIES OR OMISSIONS SHALL BE THE RESPONSIBILITY OF THE PURCHASER. DUKE SHALL NOT BE RESPONSIBLE FOR ANY DISCREPANCIES OR OMISSIONS NOT NOTED ON THE SHOP DRAWINGS. ALL ASPECTS OF DRAWINGS, INCLUDING FIELD DIMENSIONS, AND HAS NOTED ANY EXCEPTIONS.

REV.	DATE	BY
A	10/18/2024	DTM
B	09/18/2025	CAB

DESIGNED FOR: EL DORADO MIDDLE SCHOOL
DESIGNED BY: INFORM MARKETING GROUP

DRAWN BY: MAC
ESTIMATOR: C. BINGAMAN
PURCHASE ORDER #: N/A
SALES ORDER: N/A
DATE: 1/11/2024
DRAWING NO. : SD-147549
SHEET: 4
OF: 5

AGENCY APPROVAL

EL DORADO MIDDLE SCHOOL
MULTI-PURPOSE BUILDING UPGRADES

1750 WEST ST., CONCORD, CA 94521

MT. DIABLO UNIFIED SCHOOL DISTRICT

AMD FOODSERVICE DESIGN
P.O BOX 163
GARDEN VALLEY, CA
95633
p. 530-333-4606
www.amdfoodservicedesign.com

CONSULTANT

nacht&lewis
600 Q Street, Suite 100
Sacramento, CA 95811
www.nachtlewis.com
916.329.4000

ARCHITECT

REVISIONS

NO.	DESCRIPTION	DATE

DATE

JOB NO. Y2326.00

SHEET TITLE

FOODSERVICE EQUIPMENT SERVING LINE

SHEET NO.

FS9.5

AD01-13

ONE AND ONE-HALF INCH = ONE FOOT
ONE INCH = ONE FOOT
THREE-QUARTERS INCH = ONE FOOT
ONE-HALF INCH = ONE FOOT
ONE-QUARTER INCH = ONE FOOT
ONE-EIGHTH INCH = ONE FOOT
ONE-SIXTEENTH INCH = ONE FOOT
ONE INCH = TWENTY FEET
L:\2017\170507.001\3D\Drawings\3D\Sub\3D Project Files\FS9.5\FS9.5.DWG - TS - December 15, 2017

El Dorado Middle School

Electrick & Plumbing Schedule — Serving Counters

Item	Qty	Station	Make	Model	Description	Voltage	phase	watts	amps each	N.E.M.A.	electric connection	H	C	waste
20Aa	1	main servery	Duke	BGA2-46-SS	Food guard with LED light	120	1	30	0.25	5-15P	6ft cord set			
20A.1	1	main servery	Duke	DE-RHF1-SL-HFO1-SL	Duplexed Hot Frost Merchandis	120	1	1068	8.90	5-15P	Interwired with item 20Aa			
20Ba	1	main servery	Duke	BGA2-46-SS	Food guard with LED light	120	1	30	0.25	5-15P	6ft cord set			
20B.1	1	main servery	Duke	DE-RHF1-SL-HFO1-SL	Duplexed Hot Frost Merchandis	120	1	1068	8.90	5-15P	Interwired with item 20Ba			
21Aa	1	main servery	Duke	BGA2-46-SS	Food guard with LED light	120	1	30	0.25	5-15P	6ft cord set			
21A.1	1	main servery	Duke	HCF-2	HotColdFreeze Drop-in	120	1	1284	10.70	5-15P	6ft cord set			3/4"
21Ba	1	main servery	Duke	BGA2-46-SS	Food guard with LED light	120	1	30	0.25	5-15P	6ft cord set			
21B.1	1	main servery	Duke	HCF-2	HotColdFreeze Drop-in	120	1	1284	10.70	5-15P	6ft cord set			3/4"
22	1	main servery	Duke	TST-46SS	Outlet for décor LED lighting	120	1	1800	15.00	5-15P	6ft cord set			
22	1	main servery	Duke	TST-46SS	**Load center "A"**	120	1	4824	40.20		Direct			

El Dorado Middle School

Electrick & Plumbing Schedule — Serving Counters

Item	Qty	Station	Make	Model	Description	Voltage	phase	watts	amps each	N.E.M.A.	electric connection	H	C	waste
20.1a	1	salad bar	Duke	BGA2-60-SS	Food guard with LED light	120	1	30	0.25	5-15P	plugged into item 20.1.1			
20.1.1	1	salad bar	Duke	CP3-SB-DC-D	Drop-In Cold Food Pan	120	1	936	7.80	5-15P	6ft cord set			3/4"
20.1	1	salad bar	Duke	TST-60SS	**ICB"A"**	120	1	966	8.05	5-15P	6ft cord set			

Your Solutions Partner
©2017 Duke Manufacturing Co.
DUKE MANUFACTURING COMPANY
2305 North Broadway
St. Louis, MO 63102
Ph (314) 231-1130
Fax (314) 231-5074

SUBMITTAL

APPROVED AS CORRECTED. MAKE CORRECTIONS NOTED.
APPROVED AS NOTED. MAKE CORRECTIONS NOTED. RESUBMIT FOR APPROVAL.
APPROVED. FOR CONSTRUCTION. FOR BID PURPOSES ONLY. FOR CONSTRUCTION.
SIGNATURE DATE
DUKE AUTHORIZED SIGNATURE

THIS DRAWING MUST BE SIGNED AND RETURNED TO DUKE MANUFACTURING PRIOR TO BEING RELEASED FOR MANUFACTURING. IT IS THE RESPONSIBILITY OF THE PURCHASER TO REVIEW THIS DRAWING FOR ACCURACY AND TO MAKE SURE THAT IT MEETS ALL APPLICABLE CODES AND REGULATIONS. DUKE MANUFACTURING ASSUMES NO RESPONSIBILITY FOR ERRORS OR OMISSIONS ON THIS DRAWING AND HAS NOTED ANY EXCEPTIONS.

REV.	DATE	BY
A	10/18/2024	DTM
B	09/18/2025	CAB

DESIGNED FOR: EL DORADO MIDDLE SCHOOL
DESIGNED BY: INFORM MARKETING GROUP

DRAWN BY: MAC
ESTIMATOR: C. BINGAMAN
PURCHASE ORDER #: N/A
SALES ORDER: N/A
DATE: 1/11/2024
DRAWING NO. : SD-147549
SHEET: OF: 5 5

AGENCY APPROVAL

EL DORADO MIDDLE SCHOOL
MULTI-PURPOSE BUILDING UPGRADES

1750 WEST ST, CONCORD, CA 94521

MT. DIABLO UNIFIED SCHOOL DISTRICT

AMD FOODSERVICE DESIGN
P.O BOX 163
GARDEN VALLEY, CA
95633
p. 530-333-4606
www.amdfoodservicedesign.com

CONSULTANT

nacht&lewis
600 Q Street, Suite 100
Sacramento, CA 95811
www.nachtlewis.com
916.329.4000

ARCHITECT

REVISIONS

NO.	DESCRIPTION	DATE

DATE

JOB NO. Y2326.00

SHEET TITLE

FOODSERVICE EQUIPMENT SERVING LINE

SHEET NO.

FS9.6

AD01-14

ONE AND ONE-HALF INCH = ONE FOOT
ONE INCH = ONE FOOT
THREE-QUARTERS INCH = ONE FOOT
ONE-HALF INCH = ONE FOOT
ONE-QUARTER INCH = ONE FOOT
ONE-EIGHTH INCH = ONE FOOT
ONE-SIXTEENTH INCH = ONE FOOT
ONE INCH = TWENTY FEET

L:\2017\170307.001\001\Drawings\1705 AutoCAD Project Files\FS9.01.DWG - TB - December 15, 2017

LUMINAIRE SCHEDULE

TAG	MANUFACTURER & CATALOG NUMBER	DESCRIPTION	LAMP TYPE	VOLTS	WATTS	REMARKS
A1	KENALL CSEDO-24-45LD-40K8-DIM1-DV-5F-4H-SYM-FN	LAY-IN 2x4	LED	UNV	45	-
A2	KENALL CSEDO-24-45LD-40K8-DIM1-DV-5F-4H-SYM-FN	LAY-IN 2x4	LED	UNV	45	-
A3	KENALL CSEDO-24-90L-40K8-DIM1-DV-5F-4H-SYM-FN	LAY-IN 2x4	LED	UNV	90	-
B	WILLIAMS 76R-4-L52-8-40-DIM-UNV	SURFACE WRAP	LED	UNV	36	-
D	KENALL EPDL6-FF-5FW-33L-40K8-M-CSS-T-RIG6-DV-DIM1	RECESSED DOWNLIGHT	LED	UNV	33	-
EM	EVENLITE CRV-16-WH	EMERGENCY LIGHT	LED	UNV	16	NOTE 1
XEM	EVENLITE TDCOM-G-1-WW	EXIT SIGN/ EMERGENCY LIGHT	LED	UNV	4	NOTE 1

NOTES:

1. EMERGENCY FIXTURES SHALL ONLY OPERATE DURING POWER FAILURE.

SPECIFICATIONS – GENERAL REQUIREMENTS

Exhibit A – DSA 103 Testing and Inspection Form

Division 01	Section	Title
	01 01 50	ADDITIONAL REQUIREMENTS FOR DSA PROJECTS
	01 11 00	SUMMARY OF WORK
	01 12 10	CONTRACT FORMS AND SUBMITTALS
	01 20 00	PRICE AND PAYMENT PROCEDURES
	01 21 00	ALLOWANCES
	01 25 10	PRODUCT OPTIONS AND SUBSTITUTIONS
	01 26 00	CONTRACT MODIFICATION PROCEDURES
	01 26 10	REQUESTS FOR INFORMATION
	01 31 00	COORDINATION AND PROJECT MEETINGS
	01 32 16	CONSTRUCTION SCHEDULE - NETWORK ANALYSIS
	01 33 00	SUBMITTALS
	01 40 00	QUALITY REQUIREMENTS
	01 42 13	ABBREVIATIONS AND ACRONYMS
	01 42 16	GENERAL DEFINITIONS AND REFERENCES
	01 45 29	TESTING LABORATORY SERVICES
	01 50 00	TEMPORARY FACILITIES AND CONTROLS
	01 52 10	SITE STANDARDS
	01 56 39	TEMPORARY TREE AND PLANT PROTECTION
	01 60 00	MATERIALS AND EQUIPMENT
	01 66 10	DELIVERY, STORAGE AND HANDLING
	01 73 00	EXECUTION
	01 73 10	CUTTING AND PATCHING
	01 77 00	CONTRACT CLOSEOUT AND FINAL CLEANING
	01 78 23	OPERATION AND MAINTENANCE DATA
	01 78 36	WARRANTIES
	01 78 39	RECORD DOCUMENTS
	01 91 00	Commissioning

TECHNICAL SPECIFICATIONS

Division 02	02 40 00	SITE DEMOLITION
	02 41 19	MINOR DEMOLITION FOR REMODEL
Division 03	03 00 00	CAST-IN-PLACE CONCRETE
Division 05	05 50 00	METAL FABRICATIONS
Division 06	06 10 00	ROUGH CARPENTRY
	06 20 00	FINISH CARPENTRY
Division 07	07 21 00	BUILDING INSULATION
	07 26 00	VAPOR RETARDERS
	07 56 10	BUILT UP BITUMINOUS ROOFING REPAIR
	07 62 00	SHEET METAL FLASHING AND TRIM
	07 90 00	JOINT SEALANTS
Division 08	08 11 00	METAL DOORS AND FRAMES
	08 14 00	FLUSH WOOD DOORS
	08 31 13	ACCESS DOORS AND FRAMES
	08 71 00	DOOR HARDWARE
	08 80 00	GLAZING
Division 09	09 21 00	GYPSUM BOARD SYSTEMS
	09 51 00	APPLIED ACOUSTICAL WALL PANELS
	09 53 00	ACOUSTICAL CEILINGS
	09 65 00	RESILIENT FLOORING AND BASE
	09 67 00	URETHANE CEMENT FLOORING SYSTEM
	09 77 23	VIYNL WRAPPED TACK PANELS
	09 90 00	PAINTING
Division 10	10 14 00	SIGNAGE
	10 26 00	CORNER GUARDS
	10 26 33	FIBERGLASS REINFORCED LAMINATE (FRL)
	10 28 00	TOILET AND BATH ACCESSORIES
	10 44 16	FIRE EXTINGUISHERS AND CABINETS
	10 67 00	OPEN METAL SHELVING
Division 11	11 40 00	FOODSERVICE EQUIPMENT
Division 22	22 00 50	BASIC PLUMBING MATERIALS AND METHODS
	22 10 00	PLUMBING PIPING SYSTEMS
	22 40 00	PLUMBING FIXTURES
	22 50 00	PLUMBING EQUIPMENT
Division 23	23 00 50	BASIC HVAC MATERIALS AND METHODS
	23 05 93	TESTING, ADJUSTING, AND BALANCING FOR HVAC
	23 08 00	MECHANICAL SYSTEM COMISSIONING
	23 09 23	ENERGY MANAGEMENT SYSTEMS FOR HVAC
	23 80 00	HEATING, VENTILATING AND AIR CONDITIONING
Division 26	26 00 00	ELECTRICAL WORK
	26 05 05	SELECTIVE DEMOLITION FOR ELECTRICAL
	26 05 19	LOW VOLTAGE ELECTRICAL POWER CONDUCTORS AND CABLES

	26 05 26	GROUNDING AND BONDING FOR ELECTRICAL SYSTEMS
	26 05 29	HANGERS AND SUPPORTS FOR ELECTRICAL SYSTEMS
	26 05 33	RACEWAY AND BOXES FOR ELECTRICAL SYSTEMS
	26 05 53	IDENTIFICATION FOR ELECTRICAL SYSTEMS
	26 08 00	ELECTRICAL SYSTEM COMISSIONING
	26 24 00	SWICHBOARDS AND PANELBOARDS
	26 27 16	ELECTRICAL CABINETS AND ENCLOSURES
	26 27 26	WIRING DEVICES
	26 28 16	ENCLOSED SWITCHES
Division 27	27 10 00	DATA COMMUNICATIONS
	27 51 23	SOUND AND COMMUNICATIONS
	27 51 26	ASSISTIVE LISTENING SYSTEMS
Division 28	28 31 00	INTRUSION ALARM SYSTEM
	28 46 00	FIRE ALARM SYSTEM
Division 31	31 00 00	EARTHWORK
	31 23 33	TRENCHING AND BACKFILLING
Division 32	32 12 00	ASPHALT CONCRETE PAVING
	32 16 00	PORTLAND CEMENT CONCRETE PAVING
	32 17 26	DETECTABLE WARNING SURFACES
	32 31 13	CHAIN LINK FENCES AND GATES

END OF DOCUMENT

DOCUMENT 00 01 15

LIST OF DRAWINGS, TABLES AND SCHEDULES

DRAWINGS

Sheet No.	Title
General	
G000	Cover Sheet
G141	Cod Analysis - Exiting
Architectural	
A100	Overall Campus Site Plan
A101	Partial Site Plan - Demo
A102	Partial Site Plan - Proposed
A103	Enlarged Grading Plans
A111D	Demolition Floor Plan
A121D	Demolition Roof Plan
A121D	Roof Plan
A211	Reflected Ceiling Plan
A211D	Demolition Reflected Ceiling Plan
A300	Building Elevations
A301	Building Elevations
A400	Building Sections
A500	Enlarged Site Details
A520	Enlarged Restroom Plans and Elevations
A550D	Demo Interior Elevations
A551	Interior Elevations
A552	Color Interior Elevations
A600	Site Details
A610	Exterior Details
A640	Interior Details
A650	Ceiling Details
A710	Opening Schedule and Details
A811	Finish Plan and Schedule
Structural	
S001	General Notes
S002	Symbols and Abbreviations
S003	Typical Foundation Details
S004	Typical Wood Framing Details
S005	Typical Renovation Details
S111	Foundation Plan
S121	Roof Framing Plan

S131	Shear Wall Sections & Partial Ceiling Framing Plan
S400	Details
Food Service	
FS1.1	Foodservice Equipment Floor Plan
FS2.1	Foodservice Equipment Plumbing
FS3.1	Foodservice Equipment Electrical Plan
FS4.1	Foodservice Equipment Mechanical Plan
FS5.1	Foodservice Exhaust Hood Details
FS5.2	Foodservice Exhaust Hood Details
FS5.3	Foodservice Exhaust Hood Details
FS5.4	Foodservice Exhaust Hood Details
FS5.5	Foodservice Equipment Path of Egress
FS6.1	Foodservice Equipment Walk-In Details
FS7.1	Foodservice Equipment Remote Refrigeration
FS8.1	Foodservice Equipment Anchorage Details
FS8.2	Foodservice Equipment Anchorage Details
FS8.3	Foodservice Equipment Anchorage Details
FS9.1	Foodservice Equipment Elevations
FS9.2	Foodservice Equipment Serving Line
FS9.3	Foodservice Equipment Serving Line
FS9.4	Foodservice Equipment Serving Line
FS9.5	Foodservice Equipment Serving Line
FS9.6	Foodservice Equipment Serving Line
Mechanical	
M001	Mechanical Legends and Notes
M002	Mechanical Schedules
M111D	Mechanical Demolition Floor Plan
M111	Mechanical Floor Plan
M121D	Mechanical Demolition Roof Plan
M121	Mechanical Roof Plan
M401	Mechanical Sections
M501	Mechanical Details
M502	Mechanical Details
M601	Mechanical Controls
M701	Mechanical Title 24 Documentation
M702	Mechanical Title 24 Documentation
Plumbing	
P001	Plumbing Legends and Notes
P002	Plumbing Schedules
P111D	Plumbing Demolition Floor Plan
P111	Plumbing Foundation Plan
P112	Plumbing Floor Plan
P121	Plumbing Roof Plan

P501	Plumbing Details
Electrical	
E001	Electrical Cover Sheet
E002	Electrical Notes
E111	Electrical Site Plan
E112	Enlarged Electrical Plan
E121	Site Diagrams
E201D	Demolition Electrical Floor Plan
E211	Lighting Floor Plan
E212	Electrical Floor Plan
E213	Kitchen Electrical Floor Plan
E214	Signal Floor Plan
E215	Fire Alarm Floor Plan
E301	Electrical Details
E302	Electrical Details
E303	Electrical Details
E401	Lighting Controls Details
E501	Fire Alarm Riser Diagram and Calculations
E601	Title 24 Forms

SCHEDULES

The following is the anticipated schedule for this project and is subject to change;

Project Completion: **Milestones**	**Date**
Publish	September 26, 2025 and October 3, 2025
Mandatory Bid Walk	October 15, 2025 at 3:00 p.m.
Request for Information Deadline	October 17, 2025, at 3:00 p.m.
Bids Due	**October 23, 2025 at 10:00 a.m.**
Board Action	November 12, 2025
Anticipated Notice of Award	November 13, 2025
Contractor Documentation	November 26, 2025
Anticipated Notice to Proceed	December 1, 2025
Procurement / Submittals	**December 1, 2025-December 19, 2025**
Construction Mobilization	December 22, 2025
Construction Begins	December 22, 2025
Project Completion	**May 7, 2025**
Anticipated Close Out Documentation	June 9, 20
Anticipated Board Action NOC	May 13, 2025

END OF DOCUMENT

DOCUMENT 00 45 10

AGREEMENT

This agreement is made and entered into on _____, 202_____, by and between the **Mt. Diablo Unified School District** ("District") and _____ ("**Contractor**") ("**Agreement**"). The District and the Contractor agree as follows:

1. **The Work:** Contractor shall furnish all tools, equipment, apparatus, facilities, labor, and material necessary to perform and complete in a good and workmanlike manner, the work of the following project:

   MDUSD 2025 El Dorado Middle School Multi-Purpose Building Project ("**Project**" or "**Contract**" or "**Work**")

   The Work shall be performed and completed as required in the Contract Documents as defined in the General Conditions including, without limitation, the Drawings and Specifications, under the direction and supervision of, and subject to, the approval of the District or its authorized representative.

2. **The Contract Documents**:

   a. The complete Contract consists of all Contract Documents as defined in the General Conditions and incorporated herein by this reference. All obligations of the District and Contractor are fully set forth and described in the Contract Documents. The Contract Documents are intended to cooperate so that Work called for in one and not mentioned in the other or vice versa is to be performed the same as if mentioned in all Contract Documents.

   b. **Interpretation of Contract Documents/Order of Precedence**: Questions concerning the intent, precedence, or meaning of the Contract Documents, including the Drawings or Specifications, shall be submitted to the District for interpretation. Inconsistencies in the Contract Documents shall be resolved by giving precedence in the following order:

      (i) District-approved modifications (e.g., Change Orders, Force Account Directives, etc.), beginning with the most recent (if any);
      (ii) Agreement;
      (iii) Special Conditions (if any);
      (iv) Supplemental Conditions (if any);
      (v) General Conditions;
      (vi) Remaining Division 0 documents (Documents beginning with "00");
      (vii) Division 1 Documents (Documents beginning with "01");
      (viii) Division 2 through Division 49 documents (Technical Specifications);
      (ix) Figured dimensions;
      (x) Large-scale drawings;
      (xi) Small-scale drawings.

      In case of conflict, the greater quantity and/or higher standard of workmanship shall apply unless the District expressly in writing (e.g., via a Change Order) accepts a lesser quantity or lower quality of workmanship and the Contract Price is adjusted accordingly. The decision of the District in the matter shall be final.

3. **Integration / Modification.** The Contract Documents and any documents specifically incorporated by reference are completely integrated as the complete and exclusive statement of the terms of the Agreement. This Agreement supersedes all previous contracts, agreements, and / or communications,

both oral and written, and constitutes the entire understanding of the District and Contractor. No extrinsic evidence whatsoever shall be admissible or used to explain or supplement the terms of the Contract, Contract Documents, or any items incorporated by reference. No changes, amendments or alterations shall be effective unless in writing, signed by both Parties, and unless provided otherwise by the Contract Documents.

4. **Classification of Contractor's License**: Contractor hereby acknowledges that it currently holds valid Type _____ Contractor's license(s) issued by the State of California, Contractor's State Licensing Board, in accordance with division 3, chapter 9, of the Business and Professions Code and in the classification called for in the Contract Documents.

5. **Time for Completion**: It is hereby understood and agreed that the Contractor shall complete the Work within (157) consecutive calendar days ("**Contract Time**") from the date specified in the District's Notice to Proceed. The District shall not approve an early completion schedule by Contractor. A schedule showing the Work completed in less than the Contract Time indicated in the Contract, shall be considered to have Project Float. Work to be completed no later than August 06, 2024.
6. **Completion-Extension of Time**: If Contractor fails to complete the Work within the Contract Time, due allowance being made for the contingencies provided for herein, Contractor shall become liable to District for all loss and damage that District may suffer on account thereof. Contractor shall coordinate its Work with the work of all other contractors. The District shall not be liable for delays resulting from Contractor's failure to coordinate its Work with other contractors in a manner that allows for timely completion of Contractor's Work. Contractor shall be liable for delays to other contractors caused by Contractor's failure to coordinate its Work with the work of other contractors.

7. **Liquidated Damages**: Time is of the essence for all Work to be performed. It is hereby understood and agreed that it is and will be difficult and/or impossible to ascertain and determine the actual damage that District will sustain in the event of and by reason of Contractor's delay; therefore, pursuant to Government Code section 53069.85 and Public Contract Code section 7203, Contractor shall forfeit and pay to District the following sum(s) as liquidated damages ("**Liquidated Damages**"):

    - **Submittal of Submittal Schedule Item(s): $ 1,000.00 dollars** [**One Thousand Dollars**] per day as Liquidated Damages for each and every day's delay beyond the time herein prescribed for each item on approved Submittal Schedule.

    - **Milestone No. 1 (Completion): $ 2,000.00 dollars** [**Two Thousand Dollars**] per day as Liquidated Damages for each and every day's delay beyond the time herein prescribed in finishing the Work of Milestone No. 1.

a. Each portion of the Liquidated Damages shall be calculated cumulatively. For example, if Contractor is late in completing two milestones and the entire Project, Contractor will forfeit and pay three separate Liquidated Damages amounts. It is hereby understood and agreed that neither the total cumulative Liquidate Damages amount nor any portion of the Liquidated Damage amount are penalties.

b. District may deduct Liquidated Damages from money due or that may become due Contractor under this Agreement. Contractor's forfeiture of Liquidated Damages to District, and District's right to retain Liquidated Damages, are as indicated in Government Code section 53069.85 and as indicated herein and in the General Conditions. Liquidated Damages are automatically and without notice of any kind forfeited and payable by Contractor upon the accrual of each day of delay. Neither District's failure or delay in deducting Liquidated Damages from payments otherwise due the Contractor, nor District's failure or delay in notifying Contractor of the forfeiture and payment of Liquidated Damages, shall be deemed a waiver of District's right to Liquidated Damages and/or the District's right to withhold Liquidated Damages from any amounts that would otherwise be payable to the Contractor.

c. Contractor and Surety shall be liable for and pay to District the entire amount of Liquidated Damages including any portion that exceeds the amount of the Contract Price then held, retained or controlled by District.

d. Liquidated Damages shall be in addition, and not in lieu of, District's right to charge Contractor for the District's cost of completing or correcting items of the Work.

8. **Contract Price**: In consideration of the foregoing covenants, promises, and agreements, Contractor offers, in the amounts stated below, to perform the Work according to the Contract Documents. District covenants, promises, and agrees that it will pay and cause to be paid to Contractor in full, and as the Contract Price the following amount(s):

$ _____ Dollars
Base Contract Amount

+ $ Dollars
Owner Allowance Amount

= **$ _____ Dollars**
("Contract Price")

a. **THE ABOVE ALLOWANCES ARE WITHIN THE CONTRACT PRICE ONLY TO THE EXTENT CONTRACTOR HAS PERFORMED WORK ENCOMPASSED BY THE ALLOWANCE DESCRIPTION, CONTRACTOR HAS APPROPRIATELY INVOICED FOR THAT WORK, AND DISTRICT HAS APPROVED CONTRACTOR'S INVOICE. CONTRACTOR SHALL INVOICE ONLY FOR COMPONENTS OF THE WORK ENCOMPASSED BY THE ALLOWANCE DESCRIPTION, IN THE IDENTICAL STRUCTURE AS A CHANGE ORDER. THE UNUSED PORTION OF EACH ALLOWANCE SHALL BE RETAINED BY THE DISTRICT.**

b. The Contract Price shall be paid in lawful money of the United States pursuant to the payment provisions in the General Conditions.

c. The District may, at its sole discretion, increase or decrease the Contract Price by unit prices or alternates contained in Contractor's original bid. If the Bid for the Work included proposal(s) for Alternate Bid Item(s), during Contractor's performance of the Work, the District may elect to add any such Alternate Bid Item(s) if the item did not form a basis for award of the Agreement or delete any such Alternate Bid Item(s) if that item formed a basis for award of the Agreement. If the District elects to add or delete an Alternate Bid Item(s) pursuant to the foregoing, the cost or credit for that Alternate Bid Item(s) shall be as set forth in the Contractor's Bid, at the District's discretion. If any Alternate Bid Item is added or deleted from the Work pursuant to the foregoing, the Contract Time shall be adjusted by the number of days allocated for the added or deleted Alternate Bid Item in the Contract Documents; if days are not allocated for any Alternate Bid Item added or deleted pursuant to the foregoing, the Contract Time shall be equitably adjusted.

9. **Insurance and Bonds**: Contractor shall provide all required certificates of insurance, and payment and performance bonds.

10. **Performance of Work**: If Contractor fails to perform the Work properly or fails to perform any provisions of this Contract, the District, may, pursuant to the General Conditions and without prejudice to any other

remedy it may have, cure the deficiencies and deduct the cost thereof from the payment then or thereafter due Contractor.

11. **COVID-19.** Contractor is responsible for complying with all applicable and existing federal, state, and/or local statutes, orders, rules, regulations, ordinances, and/or directives relating to construction site safety in connection with COVID-19, and/or any similar virus or derivative strain. Contractor shall ensure it has supervisor employees onsite that are trained and knowledgeable of all of these requirements to ensure full compliance on Project Site(s).

12. **Authority of Architect, Project Inspector, and DSA**: Contractor hereby acknowledges that the Architect(s), the Project Inspector(s), and the Division of the State Architect have authority to approve and/or stop Work if Contractor's Work does not comply with the requirements of the Contract Documents, Title 24 of the California Code of Regulations, and all applicable laws. Contractor shall be liable for any delay caused by its non-compliant Work.

13. **Assignment of Contract**: Neither the Contract, nor any part thereof, nor any moneys due or to become due thereunder, may be assigned by Contractor without the written approval of District, nor without the written consent of the Surety on Contractor's Performance Bond (the "Surety"), unless the Surety has waived in writing its right to notice of assignment.

14. **Payment of Prevailing Wages**: Contractor and all Subcontractors under Contractor shall pay all workers on Work performed pursuant to this Contract not less than the general prevailing rate of per diem wages and the general prevailing rate for holiday and overtime work as determined by the Director of the Department of Industrial Relations, State of California, for the type of work performed and the locality in which the work is to be performed within the boundaries of the District, pursuant to sections 1770 et seq. of the California Labor Code.

15. **Project Labor Agreement:** In addition, the District is implementing a Project Labor Agreement (PLA) on this Project and Contractor specifically acknowledges and understands that it shall perform the Work of this Agreement while complying with all the applicable provisions of the PLA.

16. **Contractor & Subcontractor Registration**: Contractor shall comply with the registration and compliance monitoring provisions of Labor Code section 1771.4, including complying with any applicable enforcement by the Department of Industrial Relations.

17. **Authority of Contractor's Representatives**: Contractor hereby certifies that the person who executes this Agreement has the authority and power to legally bind the Contractor. Contractor also certifies that each person(s) it employees on the Project at or above the level of project superintendent, has the authority to legally bind the Contractor.

18. **Severability**: If any term, covenant, condition, or provision of the Contract Documents is held by a court of competent jurisdiction to be invalid, void or unenforceable, the remainder of the provisions in the Contract Documents shall remain in full force and effect and shall in no way be affected, impaired, or invalidated thereby.

19. **Notice**: Any notice required by the Agreement shall be in writing, dated and signed by the party giving notice or by a duly authorized representative of that party. Notice shall be served and considered effective if given in one of the following manners and to the following persons and addresses:

    a. By personal delivery; considered delivered on the day of delivery.

    b. By overnight delivery service; considered delivered one (1) day after date deposited, as indicated by the delivery service.

c. By depositing same in United States mail, enclosed in a sealed envelope; considered delivered three (3) days after date deposited, as indicated by the postmarked date.

d. By registered or certified mail with postage prepaid, return receipt requested; considered delivered on the day the notice is signed for.

If to District	**If to Contractor:**
Mt. Diablo Unified School District	_____
Maintenance & Operations Department	_____
1480 Gasoline Alley, CA 94520	_____, CA _____
ATTN: Melanie Koslow, Executive Director	ATTN: _____

IN WITNESS WHEREOF, accepted and agreed on the date indicated above:

Dated: _____, 20_____	Dated: _____, 20_____
Mt. Diablo Unified School District	_____ **Contractor**
Signature: _____	Signature: _____
Print Name: _____	Print Name: _____
Print Title: _____	Print Title: _____

NOTE: If the Contractor is a corporation, Contractor must attach a certified copy of the corporation's by-laws, or of the resolution of the Board of Directors of the corporation, authorizing the above person to execute this Agreement and the bonds required by the Contract Documents.

END OF DOCUMENT

DOCUMENT 01 91 00

COMMISSIONING

1. GENERAL

1.1. RELATED DOCUMENTS AND PROVISIONS

Contractor shall review all Contract Documents for applicable provisions related to the provisions in this document, including without limitation:

1.1.1. General Conditions, including, without limitation, Documents on Work and Completion of Work;

1.1.2. Special Conditions (if any);

1.1.3. Supplemental Conditions (if any);

1.1.4. Submittals;

1.1.5. Contract Closeout and Final Cleaning;

1.1.6. Operation and Maintenance Data;

1.1.7. Warranties;

1.1.8. Record Documents; and

1.2. SUMMARY

1.2.1. Commissioning is a process for validating and documenting that the facility and its systems are constructed and perform in conformity with the Contract Documents.

1.2.2. The objective of the commissioning process is to verify that the performance of the facility and its systems meet or exceed the design intent.

1.2.3. Commissioning includes special facility start-up processes used to bring the facility to a fully operational state, free of deficiencies in an efficient and timely manner.

1.2.4. Training on related systems and equipment operation and maintenance shall be scheduled to commence only after start-up is complete and systems are verified to be 100% complete and functional.

1.3. DESCRIPTION

The following applies to all Contract Documents:

1.3.1. **Contractor Startup**: Sub-phase of Contractor's work ending with Acceptance of Work, during which Contractor performs a pre-planned program of activities

including starting, testing, inspecting, adjusting balancing, correcting deficiencies and other similar activities.

1.3.1.1. The District, Construction Manager and Architect and the Inspector shall be present to observe, inspect and identify deficiencies in building systems operations.

1.3.2. The completion of startup means the entire Construction Project including startup and fine tuning has been performed to the requirements of the Contract Documents and is verified in writing by the District, Construction Manager and Architect.

1.3.3. **Fine Tuning**: Fine tuning is the responsibility of Contractors after District occupancy and ending one (1) year after District occupancy. During this time the Contractor is responsible for optimizing systems and correcting deficiencies arising under normal operating conditions.

1.3.3.1. Includes a period after occupancy where systems are optimized under "live" operating conditions and any outstanding construction deficiencies are corrected.

1.3.3.2. Fine Tuning shall extend from date of District occupancy to one year after occupancy.

1.4. DEFINITION OF TERMS

1.4.1. **Contractor's Pre-Commissioning Checklists**: Includes installation and start-up items as specified to be completed by the appropriate contractors prior to operational verification through the functional testing process.

1.4.2. **Installation Verification Process**: Includes the on-site inspection and review of related system components for conformance to Contract Documents. The Contractor shall verify systems readiness for functional testing procedures prior to the start of functional testing. Deficiencies will be documented by the Inspector for future resolution.

1.4.3. **Functional Performance Testing Process**: Includes the documented testing of system parameters, under actual or simulated operating conditions. Final performance commissioning of systems will begin only after the appropriate Contractor certifies that systems are 100% complete and ready for functional testing. The Contractor will be required to schedule, coordinate and perform device tests, calibration and functional performance test procedures.

1.4.4. **Deficiencies and Resolutions List:** Includes a list of noted deficiencies discovered as a result of the commissioning process. This list also includes the current disposition of issues, and the date of final resolution as confirmed by the Construction Manager and Inspector. Deficiencies are defined as those issues where products execution or performance does not satisfy the Project Contract Documents and/or the design intent.

1.5. COMMISSIONING SCHEDULE

1.5.1. Provide schedules for Contractor Start-Up work.

1.5.2. Incorporate in overall construction schedule.

1.5.3. Contractor's activities, which will be performed as specified under Fine Tuning, shall be completed within one (1) year from date of occupancy by the District.

1.6. CONTRACTOR RESPONSIBILITIES

1.6.1. Provide utility services required for the commissioning process.

1.6.2. Review and abide by Technical Commissioning Specifications; 23 08 00 Mechanical System Commissioning and 26 08 0 Electrical System Commissioning

1.6.3. Contractor is responsible for construction means, methods, job safety, and/or management function related to commissioning on the Project Site.

1.6.4. Contractor shall assign representatives with expertise and authority to act on behalf of Contractor and schedule the representatives to participate in and perform commissioning team activities including, but not limited to, the following:

1.6.4.1. Participate in design and construction-phase coordination meetings.

1.6.4.2. Participate in maintenance orientation and inspection.

1.6.4.3. Participate in operation and maintenance training sessions.

1.6.4.4. Participate in final review.

1.6.4.5. Certify that Work is complete and systems are operational according to the Contract Documents, including calibration of instrumentation and controls.

1.6.4.6. Evaluate performance deficiencies identified in test reports and, in collaboration with entity responsible for system and equipment installation, recommend corrective action.

1.6.4.7. Review and comment on final commissioning documentation.

1.6.5. Contractor shall integrate all commissioning activities into Contractor’s Construction Schedule.

1.6.6. Contractor’s Subcontractors shall assign representatives with expertise and authority to act on behalf of subcontractors and schedule the representatives to participate in and perform commissioning team activities including, but not limited to, the following:

1.6.6.1. Participate in design and construction-phase coordination meetings.

1.6.6.2. Participate in maintenance orientation and inspection.

1.6.6.3. Participate in procedures meeting for testing.

1.6.6.4. Participate in final review.

1.6.6.5. Provide schedule for operation and maintenance data submittals, equipment startup, and testing to Commissioning Authority for

incorporation into the commissioning plan. Update schedule on a weekly basis throughout the construction period.

1.6.6.6. Provide information to the Commissioning Authority for developing construction phase commissioning plan.

1.6.6.7. Participate in training sessions for District's operation and maintenance personnel.

1.6.6.8. Provide updated Project Record Documents to Commissioning Authority on a daily basis.

1.6.6.9. Gather and submit operation and maintenance data for systems, subsystems, and equipment to the Commissioning Authority, as specified in Division 01 Document "Operation and Maintenance Data."

1.6.6.10. Provide technicians who are familiar with the construction and operation of installed systems, who shall execute the test procedures developed by the Commissioning Authority, and who shall participate in testing of installed systems, subsystems, and equipment.

1.7. SUBMITTALS

1.7.1. Submit Draft and Final Contractor Start-up Forms as described in this Document. Submit Draft Report for Construction Manager and Architect's review and comment prior to Final Submission. Submit Final Report not later than twenty weeks before scheduled date of Acceptance of Work.

1.7.2. Prepare and submit one copy of report form to be used in preparation of system reports for:

1.7.2.1. Food Service Equipment.

1.7.2.2. Gymnasium Equipment and Scoreboards

1.7.2.3. Laboratory Fume Hoods

1.7.2.4. Elevators

1.7.2.5. Each mechanical system specified in Division 15.

1.7.2.6. Each Electrical system specified in Division 16.

1.7.3. Each System Report shall be submitted including the following:

1.7.3.1. Project Name

1.7.3.2. Name of System

1.7.3.3. Index of report's content

1.7.3.4. Adjacent to list of equipment, columns to indicate status of equipment operation, to date and to sign off equipment start-up.

1.7.3.5. Space to record equipment and operational problems which cannot be corrected with scheduled Contractor Start-Up program and which may delay Acceptance of Work.

1.7.3.6. Manufacturer's equipment start-up reports.

1.7.3.7. Systems' testing, balancing, and adjusting reports.

1.7.3.8. Equipment Report Forms shall include the following: Project name, name of equipment, starting and testing procedures to be performed and observations and test results to be recorded.

1.8. QUALITY ASSURANCE

1.8.1. Training Instructor Qualifications: Contractor shall provide factory-authorized service representatives, experienced in training, operation, and maintenance procedures for installed systems, subsystems, and equipment.

1.8.2. Test Equipment Calibration: Comply with test equipment manufacturer's calibration procedures and intervals. Recalibrate test instruments (per NIST requirements if applicable) immediately whenever instruments have been repaired following damage or dropping. Affix calibration tags to test instruments. Instruments shall have been calibrated within six months prior to use.

1.9. EQUIPMENT & SYSTEM SCHEDULE

1.9.1. The following equipment shall be commissioned in this Project:

1.9.1.1. Refer to the Technical Commissioning Specifications

1.9.1.1.1. 23 08 00 Mechanical System Commissioning
1.9.1.1.2. 26 08 00 Electrical System Commissioning

1.10. SYSTEM FAILURES

After a second failure of a system to successfully meet the criteria as set for in the functional performance testing process, the Contractor shall reimburse the District for cost associated with any additional retesting required due to uncorrected deficiencies. Costs shall include salary, benefits, overhead, travel costs and per diem lodging costs if applicable.

END OF DOCUMENT

DOCUMENT 23 08 00

MECHANICAL SYSTEM COMMISSIONING

1. GENERAL

1.1. SUMMARY

1.1.1. The Section includes requirements for commissioning HVAC and control systems, subsystems and equipment. This Section supplements the general requirements specified in Section 01 91 00 General Commissioning Requirements.

1.1.2. Special Refer to Section 01 91 00 General Commissioning Requirements for more specifics regarding processes and procedures as well as roles and responsibilities for all Commissioning Team members.

1.1.3. Related Sections
1.1.3.1. 01 91 00 – Commissioning General Requirements
1.1.3.2. Division 23

1.2. DEFINITION OF TERMS

1.2.1. Refer to Section 01 91 00 General Commissioning Requirements, Subpart 1.6.

1.3. DESCRIPTION

1.3.1. This section contains the requirements that apply to commissioning of HVAC systems, assemblies and components and the Building Automation System (BAS). The complete list of equipment and systems to be commissioned are specified in Section 01 91 00 General Commissioning Requirements, Subpart 1.5. The commissioning process, which the Contractor is responsible to execute, is defined in Section 01 91 00 General Commissioning Requirements, Part 3. A Commissioning Providers (CxP) appointed by the Owner will manage the commissioning process.

1.4. COMMISSIONED SYSTEMS

1.4.1. Commissioning of a system or systems specified in Division 23 is part of the construction process. Documentation and testing of these systems, as well as training of the Operation and Maintenance personnel in accordance with the requirements of Section 01 91 00 and of Division 23, is required in cooperation with the Owner and the Commissioning Provider.

1.4.2. Commissioning will be performed on the following systems and components.

1.4.2.1. Package Units

1.4.2.2. Exhaust Fans

1.4.2.3. BAS Controller

2. COMMISSIONING DOCUMENTS – REFER TO SECTION 01 91 00

3. EXECUTION

3.1. GENERAL

3.1.1. The Subcontractors shall be responsible for performing procedures presented in specification and contract drawings. Members of the designated Commissioning Team shall witness select portions of Division 23 installation and performance.

3.1.2. Commissioning Team members shall sign-off on appropriate sections after verifying installation, operation, or documentation. Documentation shall be dated and initialed by field engineer or technician performing the work. Final sign-off shall be by the Owner and Commissioning Provider.

3.1.3. The mechanical contractor shall provide technicians, instrumentation, and tools to perform commissioning test at the direction of the CxP.

3.1.4. The CxP in cooperation with the HVAC Contractor, Testing and Balancing Contractor, and Instrumentation and Control Contractor shall prepare detailed testing plans, procedures, and checklists for HVAC systems, subsystems, and equipment.

3.1.5. Tests will be performed using design conditions whenever possible.

3.1.6. Simulated conditions may need to be imposed when it is not practical to test under design conditions. Before simulating conditions, calibrate testing instruments. Provide equipment to simulate loads. Set simulated conditions as directed by the CxP and document simulated conditions and methods of simulation. After tests, return settings to normal operating conditions.

3.1.7. The CxP may direct that set points be altered when simulating conditions is not practical.

3.1.8. The CxP may direct that sensor values be put in “override” manual mode when design or simulating conditions and altering set points are not practical.

3.1.9. If tests cannot be completed because of a deficiency outside the scope of the HVAC and/or BAS system, document the deficiency and report it to the Owner. After deficiencies are resolved, reschedule tests.

3.2. TEST INSTRUMENTATION

3.2.1. Any test ports, gauges, test equipment, etc., needed to accomplish the functional performance tests shall be provided by Contractor

3.2.2. The test equipment shall be provided in sufficient quantities to execute functional testing in an expedient fashion.

3.2.3. The test equipment shall be suitable for testing and calibration with accuracy and tolerances necessary to demonstrate that system performance is in accordance with the basis of design.

3.2.4. Equipment used for functional testing sensors and gauges shall be certified to an accuracy of 10% of the smallest tolerance to be measured. For example, if a temperature gage is required to be +2 degrees F, the calibration device must have a minimum accuracy of +0.2 degrees F.

3.2.5. Instrumentation used for functional testing system performance must have a minimum repeatability and accuracy of ± 1.0% of the acceptance criteria being measured. For example, if a supply temperature of 50F is being verified, the repeatability and accuracy of the test instrument must be at least ± 0.5F.

3.2.6. The test equipment shall have calibration certification per equipment manufacturer's interval level or within one year if not specified.

3.3. PREFUNCTIONAL TESTING

3.3.1. The Subcontractor shall Review and Complete Prefunctional Checklists in accordance with Section 01 91 00.

3.3.2. Contractor's Commissioning Coordinator shall verify completion of all items, sign and return the checklist to the Commissioning Authority as an indication of final completion with all installation criteria as specified in the Project Contract Documents

3.3.3. The CxP will verify that HVAC and Building Automation systems, subsystems, and equipment have been installed, calibrated, and started and are operating according to the Contract Documents.

3.3.4. If work is found to be incomplete, incorrect, or non-functional, the Subcontractor shall correct the deficiency before system start-up work proceeds.

3.3.5. The initial Prefunctional Checklists will be provided in the Commissioning Plan. The final checklists may be modifications of the initial checklists, and checklists may be added; modifications and additions to be made by the Commissioning Provider after equipment submittals have been accepted.

3.3.6. The Prefunctional Checklists do not represent all the contract documents for the associated equipment. Completion of the items on this checklist does not release the contractor from requirements specified elsewhere.

3.3.7. The Commissioning Provider may spot check a sample of completed checklists. If the Commissioning Provider determines that the information provided on the checklist is not accurate, the Commissioning Provider will return the marked-up checklist to the Contractor for correction and resubmission. If the Commissioning Provider determines that a significant number of completed checklists for similar

equipment are not accurate, the Commissioning Provider will select a broader sample of checklists for review. If the Commissioning Provider determines that a significant number of the broader sample of checklists is also inaccurate, all the checklists for the type of equipment will be returned to the Contractor for correction and resubmission. Refer to Section 01 91 00 General Commissioning Requirements for submittal requirements for Pre-Functional Checklists, Equipment Startup Reports, and other commissioning documents.

3.3.8. Designated systems requiring test and balance work shall have this activity commence after systems have successfully completed start-up. System and equipment deficiencies observed during this activity is to be noted and corrected.

3.4. TESTING AND BALANCING VERIFICATION

3.4.1. Prior to performance of testing and balancing work, provide copies of reports, sample forms, checklists, and certificates to the CxP.

3.4.2. Notify the CxP at least 5 days in advance of testing and balancing work, and provide access for the CxP to witness testing and balancing work.

3.4.3. Provide technicians, instrumentation, and tools to verify testing and balancing of systems at the direction of the CxP.

3.4.3.1. Failure of an item includes a deviation of more than 10 percent. Failure of more than 10 percent of selected items shall result in rejection of final testing, adjusting, and balancing report.

3.4.3.2. Remedy the deficiency and notify the CxP so verification of failed portions can be performed.

3.4.4. The CxP will verify that testing, adjusting, and balancing procedures have been completed and that testing, adjusting, and balancing reports have been submitted, discrepancies corrected, and corrective work approved.

3.5. BMS SYSTEM REVIEW

3.5.1. Point to Point Checkout: Point to point checkout documentation shall be provided by the Contractor in accordance with the project specifications. The Controls Contractor shall support commissioning by submitting point to point checklists for CxP review and, if necessary, participating in the Commissioning Control System Field Review, in which the Controls Contractor demonstrates specified results to the CxP after completion of final point to point checkout.

3.5.2. Graphical User Interface Screenshots: The controls contractor shall submit screenshots of the control system to demonstrate the control system graphical interface is complete and the control system is ready for functional performance testing.

3.5.3. Programming: Controls programming shall be provided by the Contractor in accordance with the project specifications. The controls contractor shall submit screenshots (or other documentation) of the actual control system programming for

review and approval and to demonstrate the control system programming is complete, programmed per the controls submittal, and is ready for functional performance testing.

3.6. FUNCTIONAL PERFORMANCE TESTING

3.6.1. The Functional Performance Test (FPT) Procedures shall be developed, performed, and demonstrated in accordance with Section 01 91 00.

3.6.2. At a minimum, the mechanical and TAB contractors are required to participate in developing, performing, and demonstrating the indicated FPTs.

3.6.3. The initial FPTs shall be provided after review of the controls submittal. The final FPTs may be modifications of the initial FPTs, and FPTs may be added; modifications and additions to be made by the Commissioning Authority after equipment submittals have been accepted.

3.6.4. The Contractor's Commissioning Coordinator shall coordinate the subcontractors, with the CxP's input, in developing, performing, and demonstrating the FPTs.

3.6.5. The Contractor is responsible for resolving any deficiencies found during testing.

3.7. FUNCTION PERFORMANCE TEST SEASONAL TESTING

3.7.1. Perform seasonal testing for:

3.7.1.1. Heating Mode in Winter Conditions

3.7.1.2. Cooling Mode in Summer Conditions

3.7.1.3. Heating and Cooling Mode transition during Spring/Fall Conditions.

3.8. FUNCTION PERFORMANCE TEST DEMONSTRATION SAMPLING

3.8.1. When an FPT applies to many similar components or systems that are not a part of a life-safety system, the contractor may demonstrate the functional performance tests (FPTs) to the Commissioning Authority (CxP) as specified in Section 01 91 00. Demonstration Sampling will apply only in accordance with 01 91 00, and only for the components and systems listed in the accompanying Functional Performance Test (FPT) Demonstration Sampling Table.

FPT PROCEDURE	SAMPLE SIZE
Package Units	100%
Exhaust Fans	100%
BAS Controller	100%

END OF DOCUMENT

DOCUMENT 26 08 00

ELECTRICAL SYSTEM COMMISSIONING

1. GENERAL

1.1. SUMMARY

1.1.1. This section includes commissioning of the Lighting Control (interior and exterior) System, subsystems and equipment. This Section supplements the general requirements specified in Section 01 91 00 General Commissioning Requirements.

1.1.2. Refer to Section 01 91 00 General Commissioning Requirements for more specifics regarding processes and procedures as well as roles and responsibilities for all Commissioning Team members.

1.1.3. Related Sections

1.1.3.1. 01 91 00 – Commissioning General Requirements

1.1.3.2. Division 26

1.2. DEFINITION OF TERMS

Refer to Section 01 91 00 General Commissioning Requirements, Subpart 1.6.

1.3. DESCRIPTION

1.3.1. This section contains the requirements that apply to commissioning of electrical systems, assemblies and components. The complete list of equipment and systems to be commissioned is specified in Section 01 91 00 Facilities Systems Commissioning Requirements, Subpart 1.5. The commissioning process, which the Contractor is responsible to execute, is defined in Section 01 91 00 Facilities Systems Commissioning Requirements, Part 3. A Commissioning Provider (CxP) appointed by the Owner will manage the commissioning process.

1.4. COMMISSIONED SYSTEMS

1.4.1. Interior & Exterior Lighting Controls including but not limited to:

1.4.1.1. Manual On/Off Switches

1.4.1.2. Dimming Controls

1.4.1.3. Occupancy Sensors

1.4.1.4. Photocell Sensors

2. COMMISSIONING DOCUMENTS – REFER TO SECTION 01 91 00

3. EXECUTION

3.1. GENERAL

3.1.1. The Subcontractor shall be responsible for performing procedures presented in specification and contract drawings. Members of the designated Commissioning Team shall witness select portions of Division 26 installation and performance.

3.1.2. Commissioning Team members shall sign-off on appropriate sections after verifying installation, operation, or documentation. Documentation shall be dated and initialed by field engineer or technician performing the work. Final sign-off shall be by the Owner and Commissioning Provider.

3.1.3. The electrical contractor shall provide technicians, instrumentation, and tools to perform commissioning test at the direction of the CxP.

3.1.4. The CxP in cooperation with the electrical Contractor shall prepare detailed testing plans, procedures, and checklists for the lighting control systems.

3.1.5. Tests will be performed using design conditions whenever possible.

3.1.6. Simulated conditions may need to be imposed when it is not practical to test under design conditions. Before simulating conditions, calibrate testing instruments. Provide equipment to simulate loads. Set simulated conditions as directed by the CxP and document simulated conditions and methods of simulation. After tests, return settings to normal operating conditions.

3.1.7. The CxP may direct that set points be altered when simulating conditions is not practical.

3.1.8. The CxP may direct that sensor values be put in “override” manual mode when design or simulating conditions and altering set points are not practical.

3.1.9. If tests cannot be completed because of a system deficiency, document the deficiency and report it to the Owner. After deficiencies are resolved, reschedule tests.

3.2. PREFUNCTIONAL CHECKLISTS

3.2.1. The Subcontractor shall Review and Complete Prefunctional Checklists in accordance with Section 01 91 00.

3.2.2. Contractor’s Commissioning Coordinator shall verify completion of all items, sign and return the checklist to the Commissioning Authority as an indication of final completion with all installation criteria as specified in the Project Contract Documents

3.2.3. The CxP will verify that lighting control system has been installed, calibrated, and started and are operating according to the Contract Documents.

3.2.4. If work is found to be incomplete, incorrect, or non-functional, the Subcontractor shall correct the deficiency before system start-up work proceeds.

3.2.5. The initial Prefunctional Checklists will be provided in the Commissioning Plan. The final checklists may be modifications of the initial checklists, and checklists may be added; modifications and additions to be made by the Commissioning Provider after equipment submittals have been accepted.

3.2.6. The Prefunctional Checklists do not represent all the contract documents for the associated equipment. Completion of the items on this checklist does not release the contractor from requirements specified elsewhere.

3.2.7. The Commissioning Provider may spot check a sample of completed checklists. If the Commissioning Provider determines that the information provided on the checklist is not accurate, the Commissioning Provider will return the marked-up checklist to the Contractor for correction and resubmission. If the Commissioning Provider determines that a significant number of completed checklists for similar equipment are not accurate, the Commissioning Provider will select a broader sample of checklists for review. If the Commissioning Provider determines that a significant number of the broader sample of checklists is also inaccurate, all the checklists for the type of equipment will be returned to the Contractor for correction and resubmission. Refer to Section 01 91 00 General Commissioning Requirements for submittal requirements for Pre-Functional Checklists, Equipment Startup Reports, and other commissioning documents.

3.3. FUNCTIONAL PERFORMANCE TESTING

3.3.1. The Functional Performance Test (FPT) Procedures shall be developed, performed, and demonstrated in accordance with Section 01 91 00.

3.3.2. At a minimum, the electrical contractors are required to participate in developing, performing, and demonstrating the indicated FPTs.

3.3.3. The initial draft FPTs shall be provided after pre-functional checklist documentation is complete. The final FPTs may be modifications of the initial FPTs, and FPTs may be added; modifications and additions to be made by the Commissioning Provider after equipment submittals have been accepted.

3.3.4. The Contractor's Commissioning Coordinator shall coordinate the subcontractors, with the CxP's input, in developing, performing, and demonstrating the FPTs.

3.3.5. The Contractor is responsible for resolving any deficiencies found during testing.

FPT PROCEDURE	SAMPLE SIZE
Manual Switches	100%
Dimming Controls	100%
Occupancy Sensors	100%
Photocell Sensors	100%

END OF DOCUMENT