Gale Associates \South\, Inc.
217 N. Westmonte Dr., Suite 3033
Altamonte Springs, FL 32714
P 407.599.7031 | F 407.599.7077
www.galeassociates.com

ADDENDUM NO. 2

Issue Date:	September 19, 2025
School / Facility Name:	Blue Lake Elementary School
Project Name:	Renovate Basketball Court
Owner's Project No.:	2548107

Owner:	School Board of Volusia County Florida 200 N. Clara Avenue, DeLand Florida 32720
Owner's Project Manager:	Francisco Negron
Project Manager's Location:	3750 Olson Drive, Daytona Beach Florida 32124

Architect's Representative:	Christopher Harris
Architect's Project No.:	678414

The following modifications shall be incorporated to the previously distributed construction documents. Any questions regarding these modifications should be directed to the project architect or engineer for consideration.

The Drawings and Specifications are hereby modified as follows:

POINT OF INFORMATION

Modifications regarding the court layout and the proposed fencing and gates have been made. Please refer to revised Project Manual and Drawings as referenced in this addendum.

PROJECT MANUAL

1. Project Manual Cover – remove then replace with revised document
2. Table of Contents – remove then replace with new document
3. Index of Drawings – remove then replace with revised document
4. A101-2017 Standard Form of Agreement – remove then replace with new document
5. Exhibit A to A101-2017 Insurance and Bonds – remove then replace with new document
6. A201-2017 General Conditions – remove then replace with new document
7. Section 010100 Summary of Work – remove then replace with new document

DRAWINGS

1. Remove Sheet G001 and Replace with Revised Sheet G001
2. Remove Sheet C002A and Replace with Revised Sheet C002
3. Remove Sheet C002B in its entirety
4. Remove Sheet C101A and Replace with Revised Sheet C101
5. Remove Sheet C101B in its entirety
6. Remove Sheet C501 and Replace with Revised Sheet C501

Gale Associates \South\, Inc.
217 N. Westmonte Dr., Suite 3033
Altamonte Springs, FL 32714
_P 407.599.7031 | F 407.599.7077_
www.galeassociates.com

END OF ADDENDUM NO. 2

ATTACHMENTS:

Project Manual: Cover, Table of Contents, Index of Drawings, A101-2017 Standard Form of Agreement, Exhibit A to A101-2017 Insurance and Bonds, A201-2017 General Conditions, Section 010100 Summary of Work

Drawings: G001 Cover Sheet, C002 Demolition and Erosion Control Plan, C101 Layout and Materials Plan, C501 Detail Sheet 1

Project Manual

RENOVATE BASKETBALL COURT
PROJECT NO. 2548107

BLUE LAKE ELEMENTARY SCHOOL
282 BLUE LAKE AVE
DELAND, FL 32724

THE SCHOOL BOARD OF VOLUSIA COUNTY FLORIDA
200 NORTH CLARA AVENUE
DELAND, FLORIDA

CIVIL

Gale Associates \South\, Inc.
217 N. Westmonte Dr., Suite 3033
Altamonte Springs, FL 32714

DATE: 02/10/2025

REVISED: 09/19/2025

TABLE OF CONTENTS
SCHOOL BOARD OF VOLUSIA COUNTY FLORIDA

Facility Name: Blue Lake Elementary
Project Name: Renovate Basketball Court
VCS Project No.: 2548107

All references herein that conflict with processes, procedures, or other terms outlined in the Owner contracts, as associated with this Project, the Owner contracts shall take precedence.

TITLE	NO. OF PAGES
Cover Page (Revised)	1
Table of Contents (Replaced)	2
Index of Drawings (Revised)	1

DIVISION 0

DOC. NO.	TITLE	NO. OF PAGES
BID REQUIREMENTS AND FORMS		
630	Advertisement for Bid	1
631	Instructions to Bidders	5
632	Bid Form	1
A310	Bid Bond Form (AIA Doc)	2
633	List of Subcontractors	1
634	Bidder Project Data Self-Perfomed Portions of Work	2
635	Trench Safety Act Form	1
636	Bid Protest Bond Form	2
CONTRACT DOCUMENTS AND CONSTRUCTION PHASE FORMS		
A101-2017	Standard Form of Agreement (Standard Bid) (Replaced)	8
A101-2017	Exhibit A - Insurance and Bonds (Standard Bid) (Replaced)	8
A201-2017	General Conditions of the Contract (Standard Bid) (Replaced)	46
625	N/A	N/A
639	Contractor E-Verify Affidavit	1
640	Performance and Payment Bond	2
641	Contractor's Direct Material Purchase Affidavit	1
642	Contractor Acknowledgment Form (Asbestos Survey)	1
G702	Application and Certification for Payment (AIA Doc)	1
G703	Application and Certification for Payment – Continuation Sheet (AIA Doc)	1
655	Partial Receipt and Release	1
G707A	Consent of Surety to Reduction in or Partial Release of Retainage (AIA Doc)	1
G707	Consent of Surety to Final Payment (AIA Doc)	1
661	Contractor Affidavit	1
662	Receipt and Release	1

Note:
Project $200,000 or more, utilize the A101-2017 Standard Form of Agreement, A101-2017 Exhibit A and the A201-2017 General Conditions of the Contract (Standard Bid); project is less than $200,000 utilize the 625 Standard Form of Agreement (Proposals).

Specific documents listed above may not apply to this project. Select "N/A" for document(s) which do not apply to this project. ***Required: consult the Owner's Construction Project Manager in charge to make this determination.***

Facility Name:	Blue Lake Elementary
Project Name:	Renovate Basketball Court
VCS Project No.:	2548107

(Insert remainder of specification sections below to complete the table of contents.)

Section No.	
010100	Summary of Work (Revised)
012300	Alternates
013114	Conduct of Work
013302	Submittal Requirements
015000	Temporary Facilities
017000	Project Closeout
017123	Surveys and Record Drawings
017419	Cleaning Up
017600	Protection
022113	Existing Conditions
023000	Subsurface Investigation
024113	Selective Site Demolition
116833	Athletic Equipment
311000	Site Clearing
312000	Earth Moving
312500	Erosion and Sediment Controls
321216	Asphalt Paving
321838	Courts
323113	Fence and Gates

INDEX OF DRAWINGS

SCHOOL BOARD OF VOLUSIA COUNTY FLORIDA

Facility Name: Blue Lake Elementary
Project Name: Renovate Basketball Court
VCS Project No.: 2548107

Complete Index of Drawings information including division headings, page numbers and page titles below:

Drawing No.	Sheet Name
G001	Cover Sheet (Revised)
G002	Notes and Legend Sheet
C001	Evaluation Plan
C002~~A~~	Demolition and Erosion Control Plan ~~A~~ (Renumbered / Renamed / Revised)
~~C002B~~	~~Demolition and Erosion Control Plan B (Alternate 1)~~ (Removed)
C101~~A~~	Layout and Materials Plan ~~A~~ (Renumbered / Renamed / Revised)
~~C101B~~	~~Layout and Materials Plan B (Alternate 1)~~ (Removed)
C501	Detail Sheet 1 (Revised)
C502	Detail Sheet 2
C503	Detail Sheet 3

AIA Document A101 – 2017

Standard Form of Agreement Between Owner and Contractor
where the basis of payment is a Stipulated Sum

AGREEMENT made as of the _____ day of _____ in the year _____.
(In words, indicate day, month, and year.)

BETWEEN the Owner:
(Name, legal status, address and other information)

School Board of Volusia County Florida
200 North Clara Avenue, DeLand Florida 32720

Document mailing address: 3750 Olson Drive, Daytona Beach Florida 32124

and the Contractor:
(Name, legal status, address and other information)

_____

for the following Project:
(Name, location and detailed description)

_____

The Architect:
(Name, legal status, address and other information)

_____

The Owner and Contractor agree as follows.

DRAFT

TABLE OF ARTICLES

1 THE CONTRACT DOCUMENTS

2 THE WORK OF THIS CONTRACT

3 DATE OF COMMENCEMENT AND SUBSTANTIAL COMPLETION

4 CONTRACT SUM

5 PAYMENTS

6 DISPUTE RESOLUTIONS

7 TEMINATION OR SUSPENSION

8 MISCELLANEOUS PROVISIONS

9 ENUMERATION OF CONTRACT DOCUMENTS

EXHIBIT A INSURANCE AND BONDS

ARTICLE 1 THE CONSTRACT DOCUMENTS

The Contract Documents consist of this Agreement, Conditions of the Contract (General, Supplementary, and other Conditions), Drawings, Specifications, Addenda issued prior to execution of this Agreement, other documents listed in this Agreement, and Modifications issued after execution of this Agreement, all of which form the Contract, and are as fully a part of the Contract as if attached to this Agreement or repeated herein. The Contract represents the entire and integrated agreement between the parties hereto and supersedes prior negotiations, representations, or agreements, either written or oral. An enumeration of the Contract Documents, other than a Modification, appears in Article 9. Contract documents include the Contractor's bid or proposal.

ARTICLE 2 THE WORK OF THIS CONTRACT

The Contractor shall fully execute the Work described in the Contract Documents, except as specifically indicated in the Contract Documents to be the responsibility of others.

ARTICLE 3 DATE OF COMMENCEMENT AND SUBSTANTIAL COMPLETION

§ 3.1. The date of commencement of the Work shall be:

[ ] The date of this Agreement.

[X] A date set forth in a notice to proceed issued by the Owner.

[ ] Established as follows:

(Insert a date or a means to determine the date of commencement of the Work.)

_____

If a date of commencement of the Work is not selected, then the date of commencement shall be the date of this Agreement.

§ 3.2 The Contract Time shall be measured from the date of commencement of the Work.

§ 3.3 Substantial Completion

§ 3.3.1 Subject to adjustments of the Contract Time as provided in the Contract Documents, the Contractor shall achieve Substantial Completion of the entire Work:
(Check one of the following boxes and complete the necessary information.)

[X] Not later than _____ (_____) consecutive calendar days from the date of commencement of the Work.

[ ] By the following date:

§ 3.3.2 Subject to adjustments of the Contract Time as provided in the Contract Documents, if portions of the Work are to be completed prior to Substantial Completion of the entire Work, the Contractor shall achieve Substantial Completion of such portions by the following dates:

Portion of Work	Substantial Completion Date

§ 3.3.3 If the Contractor fails to achieve Substantial Completion as provided in this Section 3.3, liquidated damages, if any, shall be assessed as set forth in Section 4.5.

ARTICLE 4 CONTRACT SUM

§ 4.1 The Owner shall pay the Contractor the Contract Sum in current funds for the Contractor's performance of the Contract. The Contract Sum shall be _____ ($ _____), subject to additions and deductions as provided in the Contract Documents.

§ 4.2 Alternates

§ 4.2.1 Alternates, if any, included in the Contract Sum:

Item	Price

~~**§ 4.2.2** Subject to the conditions noted below, the following alternates may be accepted by the Owner following execution of this Agreement. Upon acceptance, the Owner shall issue a Modification to this Agreement.~~
~~*(Insert below each alternate and the conditions that must be met for the Owner to accept the alternate.)*~~

~~Item~~	~~Price~~	~~Conditions of Acceptance~~

§ 4.3 Allowances, if any, included in the Contract Sum:
(Identify each allowance.)

Item	Price

§ 4.4 Unit prices, if any:
(Identify the item and state the unit price and quantity limitations, if any, to which the unit price will be applicable.)

Item	Units and Limitations	Price per Unit ($0.00)

§ 4.5 Liquidated damages, if any:
(Insert terms and conditions for liquidated damages, if any.)

The parties acknowledge the Owner will suffer damages if the project has not reached Substantial Completion and Final Completion on the dates set forth in the Contract. The damages suffered by the Owner, in the event of a delay, are not readily ascertainable. Due to the difficulty in ascertaining the damages, the Contractor and the Contractor's surety shall be liable for and shall pay, as liquidated damages, the sum of dollars cents ($) per calendar

day for each calendar day or part thereof, the delay in the project continues beyond the deadline set by the terms of the Contract for Substantial Completion of the work. The parties acknowledge that these sums are not a penalty, but are the amount agreed upon by the parties as liquidated damages representing the losses to the Owner which would be incurred in the event the project is delayed by the Contractor beyond the date of Substantial Completion as set forth in the Contract. Time is of the essence. Any such liquidated damages may, at the option of the Owner, be withheld and deducted from any unpaid portion of the Contract sum.

§ 4.6 Other:
(Insert provisions for bonus or other incentives, if any, that might result in a change to the Contract Sum.)

_____

ARTICLE 5 PAYMENTS
§ 5.1 Progress Payments
§ 5.1.1 Based upon Applications for Payment submitted to the Architect by the Contractor and Certificates for Payment issued by the Architect, the Owner shall make progress payments on account of the Contract Sum to the Contractor as provided below and elsewhere in the Contract Document.

§ 5.1.2 The period covered by each Application for Payment shall be one calendar month ending on the last day of the month, or as follows:

_____

§ 5.1.3 Provided that an Application for Payment is received by the Architect not later than the first day of a month and certified to the Owner by the seventh day of the month, the Owner shall make payment of the amount certified to the Contractor not later than the last day of the same month. If an Application for Payment is received by the Architect and certified to the Owner after the application date fixed above, payment of the amount certified shall be made by the Owner not later than thirty (30) days after the Architect receives the Application for Payment.
(Federal, state or local laws may require payment within a certain period of time.)

§ 5.1.4 Each Application for Payment shall be based on the most recent schedule of values submitted by the Contractor in accordance with the Contract Documents. The schedule of values shall allocate the entire Contract Sum among the various portions of the Work. The schedule of values shall be prepared in such form, and supported by such data to substantiate its accuracy, as the Architect and Owner may require. This schedule of values shall be used as a basis for reviewing the Contractor's Applications for Payment. The Contractor shall not make changes in the Schedule of Values without prior approval of the Architect and Owner.

§ 5.1.5 Applications for Payment shall show the percentage of completion of each portion of the Work as of the end of the period covered by the Application for Payment.

§ 5.1.6 In accordance with AIA Document A201™–2017, General Conditions of the Contract for Construction, and subject to other provisions of the Contract Documents, the amount of each progress payment shall be computed as follows:

§ 5.1.6.1 The amount of each progress payment shall first include:

- **.1** That portion of the Contract Sum properly allocable to completed Work;
- **.2** That portion of the Contract Sum properly allocable to materials and equipment delivered and suitably stored at the site for subsequent incorporation in the completed construction, or, if approved in advance by the Owner, suitably stored off the site at a location agreed upon in writing.~~; and~~
- ~~**.3** That portion of Construction Change Directives that the Architect determines, in the Architect's professional judgment, to be reasonably justified.~~

§ 5.1.6.2 The amount of each progress payment shall then be reduced by:

- **.1** The aggregate of any amounts previously paid by the Owner;

.2 The amount, if any, for Work that remains uncorrected and for which the Architect has previously withheld a Certificate for Payment as provided in Article 9 of AIA Document A201–2017;

.3 Any amount for which the Contractor does not intend to pay a Subcontractor or material supplier, unless the Work has been performed by others the Contractor intends to pay;

.4 For Work performed or defects discovered since the last payment application, any amount for which the Architect may withhold payment, or nullify a Certificate of Payment in whole or in part, as provided in Article 9 of AIA Document A201–2017; and

.5 Retainage withheld pursuant to Section 5.1.7.

§ 5.1.7 Retainage

§ 5.1.7.1 For each progress payment made prior to Substantial Completion of the Work, the Owner may withhold the following amount, as retainage, from the payment otherwise due:
(Insert a percentage or amount to be withheld as retainage from each Application for Payment. The amount of retainage may be limited by governing law.)

Retainage, not to exceed five percent (5%), shall be withheld from each progress payment to the Contractor for Projects with a total cost of construction services identified in the contract of more than two hundred thousand dollars ($200,000.00), 218.735 F.S.

§ 5.1.7.1.1 The following items are not subject to retainage:
(Insert any items not subject to the withholding of retainage, such as general conditions, insurance, etc.)

_____

§ 5.1.7.2 Reduction or limitation of retainage, if any, shall be as follows:
(If the retainage established in Section 5.1.7.1 is to be modified prior to Substantial Completion of the entire Work, including modifications for Substantial Completion of portions of the Work as provided in Section 3.3.2, insert provisions for such modifications.)

_____

§ 5.1.7.3 Except as set forth in this Section 5.1.7.3, upon Substantial Completion of the Work, the Contractor may submit an Application for Payment that includes the retainage withheld from prior Applications for Payment pursuant to this Section 5.1.7. The Application for Payment submitted at Substantial Completion shall not include retainage as follows:
(Insert any other conditions for release of retainage upon Substantial Completion.)

_____

§ 5.1.8 If final completion of the Work is materially delayed through no fault of the Contractor, the Owner shall pay the Contractor any additional amounts in accordance with Article 9 of AIA Document A201–2017.

§ 5.1.9 Except with the Owner's prior approval, the Contractor shall not make advance payments to suppliers for materials or equipment which have not been delivered and stored at the site.

§ 5.2 Final Payment

§ 5.2.1 Final payment, constituting the entire unpaid balance of the Contract Sum, shall be made by the Owner to the Contractor when

.1 the Contractor has fully performed the Contract except for the Contractor's responsibility to correct Work as provided in Article 12 of AIA Document A201–2017, and to satisfy other requirements, if any, which extend beyond final payment; and

.2 applicable for Final Payment along with all warranties, guarantees, close out documents including all as built drawings in paper document and digital combined PDF format, transmitted via FTP or other Owner accepted protocol, and items required under the Contract Documents as submitted to the Architect or Engineer for review and transmittal to the Owner; and

.3 Board acceptance of the Certificate of Final Inspection (CFI); and

.4 a final Certificate for Payment has been issued by the Architect.

§ 5.2.2 The Owner's final payment to the Contractor shall be made ~~no later than~~ 30 days after the issuance of the Architect's final Certificate for Payment, or as follows:

_____

~~**§ 5.2 Interest**~~
~~Payments due and unpaid under the Contract shall bear interest from the date payment is due at the rate stated below, or in the absence thereof, at the legal rate prevailing from time to time at the place where the Project is located.~~
~~*(Insert rate of interest agreed upon, if any.)*~~

ARTICLE 6 DISPUTE RESOLUTION
§ 6.1 Initial Decision Maker
The Architect will serve as the Initial Decision Maker pursuant to Article 15 of AIA Document A201–2017~~, unless the parties appoint below another individual, not party to this Agreement, to serve as the Initial Decision Maker~~.
(If the parties mutually agree, insert the name, address and other contact information of the Initial Decision Maker, if other than the Architect.)

_____

§ 6.2 Binding Dispute Resolution
For any Claim subject to, but not resolved by, mediation pursuant to Article 15 of AIA Document A201–2017, the method of binding dispute resolution shall be as follows:
(Check the appropriate box.)

[ ] Arbitration pursuant to Section 15.4 of AIA Document A201–2017

[X] Litigation in a court of competent jurisdiction

[ ] Other *(Specify)*

_____

If the Owner and Contractor do not select a method of binding dispute resolution, or do not subsequently agree in writing to a binding dispute resolution method other than litigation, Claims will be resolved by litigation in a court of competent jurisdiction.

ARTICLE 7 TERMINATION OR SUSPENSION
§ 7.1 The Contract may be terminated by the Owner or the Contractor as provided in Article 14 of AIA Document A201–2017.

~~**§ 7.1.1** If the Contract is terminated for the Owner's convenience in accordance with Article 14 of AIA Document A201–2017, then the Owner shall pay the Contractor a termination fee as follows:~~
~~*(Insert the amount of, or method for determining, the fee, if any, payable to the Contractor following a termination for the Owner's convenience.)*~~

_____

§ 7.2 The Work may be suspended by the Owner as provided in Article 14 of AIA Document A201–2017.

ARTICLE 8 MISCELLANEOUS PROVISIONS
§ 8.1 Where reference is made in this Agreement to a provision of AIA Document A201–2017 or another Contract Document, the reference refers to that provision as amended or supplemented by other provisions of the Contract Documents.

§ 8.2 The Owner's representative:
(Name, address, email address, and other information)

_____

§ 8.3 The Contractor's representative:
(Name, address, email address, and other information)

_____

§ 8.4 ~~Neither the Owner's nor the Contractor's representative shall be changed without ten days prior notice to the other party.~~ The Contractor's representative shall not be changed without prior written approval by the Owner.

§ 8.5 Insurance and Bonds
§ 8.5.1 The Owner and the Contractor shall purchase and maintain insurance as set forth in AIA Document A101™–2017, Standard Form of Agreement Between Owner and Contractor where the basis of payment is a Stipulated Sum, Exhibit A, Insurance and Bonds, and elsewhere in the Contract Documents.

§ 8.5.2 The Contractor shall provide bonds as set forth in AIA Document A101™–2017 Exhibit A, and elsewhere in the Contract Documents.

§ 8.6 Other provisions:

_____

ARTICLE 9 ENUMERATION OF CONTRACT DOCUMENTS
§ 9.1 This Agreement is comprised of the following documents:

.1 AIA Document A101™–2017, Standard Form of Agreement Between Owner and Contractor
.2 AIA Document A101™–2017, Exhibit A, Insurance and Bonds
.3 AIA Document A201™–2017, General Conditions of the Contract for Construction

.4 Drawings

Exhibit	Title	Date
B	List of Drawings	

.5 Specifications

Exhibit	Title	Date
C	List of Specifications	

.6 Addenda, if any:

Number	Date	Pages

Portions of Addenda relating to bidding or proposal requirements are not part of the Contract Documents unless the bidding or proposal requirements are also enumerated in this Article 9.

.7 Other Exhibits:
(Check all boxes that apply and include appropriate information identifying the exhibit where required.)

Supplemental and other Conditions of the Contract:

_____

DRAFT

.8 Other documents, if any, listed below:
(List here any additional documents that are intended to form part of the Contract Documents. AIA Document A201™–2017 provides that the advertisement or invitation to bid, Instructions to Bidders, sample forms, the Contractor's bid or proposal, portions of Addenda relating to bidding or proposal requirements, and other information furnished by the Owner in anticipation of receiving bids or proposals, are not part of the Contract Documents unless enumerated in this Agreement. Any such documents should be listed here only if intended to be part of the Contract Documents.)

_____

This Agreement entered into as of the day and year first written above.

School Board of Volusia County Florida _____

OWNER *(Signature)*	**CONTRACTOR** *(Signature)*
, Board Chair *(Printed name and title)*	*(Printed name and title)*
WITNESS *(Signature)*	**WITNESS** *(Signature)*
, Superintendent *(Printed name and title)*	*(Printed name and title)*

DRAFT

Exhibit A – Insurance and Bonds
to AIA Document A101 – 2017 Agreement

This Insurance and Bonds Exhibit is part of the Agreement, between the Owner and the Contractor, dated the _____ day of _____ in the year _____.
(In words, indicate day, month, and year.)

for the following **PROJECT**:
(Name and location or address)

_____

THE OWNER:
(Name, legal status and address)

School Board of Volusia County Florida
200 North Clara Avenue, DeLand Florida 32720

Document mailing address: 3750 Olson Drive, Daytona Beach Florida 32124

THE CONTRACTOR:
(Name, legal status and address)

_____

TABLE OF ARTICLES

A.1 GENERAL

A.2 OWNER'S INSURANCE

A.3 CONTRACTOR'S INSURANCE AND BONDS

A.4 SPECIAL TERMS AND CONDITIONS

ARTICLE A.1 GENERAL

The Owner and Contractor shall purchase and maintain insurance, and provide bonds, as set forth in this Exhibit. As used in this Exhibit, the term General Conditions refers to AIA Document A201™–2017, General Conditions of the Contract for Construction. The Owner, at its discretion, may modify this document at any time during the preparation of the Contract to conform to the Project.

ARTICLE A.2 OWNER'S INSURANCE

§ A.2.1 General

Prior to commencement of the Work, the Owner shall secure the insurance, and provide evidence of the coverage, required under ~~this Article~~ Section A.2.2 and, upon the Contractor's request, provide a copy of the ~~property~~ insurance policy or policies required ~~by Section A2.3~~. The copy of the policy or policies provided shall contain all applicable conditions, definitions, exclusions, and endorsements.

§ A.2.2 Liability and Property Insurance

The Owner shall be responsible for purchasing and maintaining the Owner's usual general liability and property insurance.

DRAFT

§ A.2.3 Required Property Insurance

§ A.2.3.1 ~~Unless this obligation is placed on the~~ The Contractor, pursuant to Section A.3.3.2.1, ~~the Owner~~ shall purchase and maintain, from an insurance company or insurance companies lawfully authorized to issue insurance in the jurisdiction where the Project is located, property insurance written on a builder's risk "all-risks" completed value or equivalent policy form and sufficient to cover the total value of the entire Project on a replacement cost basis. The ~~Owner's~~ Contractor's property insurance coverage shall be no less than the amount of the initial Contract Sum, plus the value of subsequent Modifications and labor performed and materials or equipment supplied by others. The property insurance shall be maintained until Substantial Completion and thereafter as provided in Section A.2.3.1.3, unless otherwise provided in the Contract Documents or otherwise agreed in writing by the parties to this Agreement. This insurance shall include the interests of the Owner, Contractor, Subcontractors, and Sub-subcontractors in the Project as insureds. This insurance shall include the interests of mortgagees as loss payees.

§ A.2.3.1.1 Causes of Loss. The insurance required by this Section A.2.3.1 shall provide coverage for direct physical loss or damage, and shall not exclude the risks of fire, explosion, theft, vandalism, malicious mischief, collapse, earthquake, flood, or windstorm. The insurance shall also provide coverage for ensuing loss or resulting damage from error, omission, or deficiency in construction methods, design, specifications, workmanship, or materials. Sub-limits, if any, are as follows:
(Indicate below the cause of loss and any applicable sub-limit.)

Causes of Loss	Sub-Limit

§ A.2.3.1.2 Specific Required Coverages. The insurance required by this Section A.2.3.1 shall provide coverage for loss or damage to falsework and other temporary structures, and to building systems from testing and startup. The insurance shall also cover debris removal, including demolition occasioned by enforcement of any applicable legal requirements, and reasonable compensation for the Architect's and Contractor's services and expenses required as a result of such insured loss, including claim preparation expenses. Sub-limits, if any, are as follows:
(Indicate below type of coverage and any applicable sub-limit for specific required coverages.)

Coverage	Sub-Limit

§ A.2.3.1.3 Unless the parties agree otherwise, upon Substantial Completion, the ~~Owner~~ Contractor shall continue the insurance required by Section A.2.3.1 or, if necessary, replace the insurance policy required under Section A.2.3.1 with property insurance written for the total value of the Project that shall remain in effect until expiration of the period for correction of the Work set forth in Section 12.2.2 of the General Conditions.

§ A.2.3.1.4 Deductibles and Self-Insured Retentions. If the insurance required by this Section A.2.3 is subject to deductibles or self-insured retentions, the ~~Owner~~ Contractor shall be responsible for all loss not covered because of such deductibles or retentions. Deductibles in excess of $50,000 shall not be permitted.

§ A.2.3.2 Occupancy or Use Prior to Substantial Completion. The Owner's occupancy or use of any completed or partially completed portion of the Work prior to Substantial Completion shall not commence until the insurance company or companies providing the insurance under Section A.2.3.1 have consented in writing to the continuance of coverage. The Owner and the Contractor shall take no action with respect to partial occupancy or use that would cause cancellation, lapse, or reduction of insurance, unless they agree otherwise in writing.

§ A.2.3.3 Insurance for Existing Structures

If the Work involves remodeling an existing structure or constructing an addition to an existing structure, the ~~Owner~~ Contractor shall purchase and maintain, until the expiration of the period for correction of Work as set forth in Section 12.2.2 of the General Conditions, "all-risks" property insurance, on a replacement cost basis, protecting the existing structure against direct physical loss or damage from the causes of loss identified in Section A.2.3.1, notwithstanding the undertaking of the Work. The Contractor shall be responsible for all co-insurance penalties.

DRAFT

§ A.2.4 Optional Extended Property Insurance.
The ~~Owner~~ Contractor shall purchase and maintain the insurance selected and described below.
(Select the types of insurance the ~~Owner~~ Contractor is required to purchase and maintain by placing an X in the box(es) next to the description(s) of selected insurance. For each type of insurance selected, indicate applicable limits of coverage or other conditions in the fill point below the selected item.)

[ ] **§ 2.4.1 Loss of Use, Business Interruption, and Delay in Completion Insurance**, to reimburse the Owner for loss of use of the Owner's property, or the inability to conduct normal operations due to a covered cause of loss.

[X] **§ 2.4.2 Ordinance or Law Insurance**, for the reasonable and necessary costs to satisfy the minimum requirements of the enforcement of any law or ordinance regulating the demolition, construction, repair, replacement or use of the Project.

[ ] **§ 2.4.3 Expediting Cost Insurance**, for the reasonable and necessary costs for the temporary repair of damage to insured property, and to expedite the permanent repair or replacement of the damaged property.

[ ] **§ 2.4.4 Extra Expense Insurance**, to provide reimbursement of the reasonable and necessary excess costs incurred during the period of restoration or repair of the damaged property that are over and above the total costs that would normally have been incurred during the same period of time had no loss or damage occurred.

[ ] **§ 2.4.5 Civil Authority Insurance**, for losses or costs arising from an order of a civil authority prohibiting access to the Project, provided such order is the direct result of physical damage covered under the required property insurance.

[ ] **§ 2.4.6 Ingress/Egress Insurance**, for loss due to the necessary interruption of the insured's business due to physical prevention of ingress to, or egress from, the Project as a direct result of physical damage.

[ ] **§ 2.4.7 Soft Costs Insurance**, to reimburse the Owner for costs due to the delay of completion of the Work, arising out of physical loss or damage covered by the required property insurance: including construction loan fees; leasing and marketing expenses; additional fees, including those of architects, engineers, consultants, attorneys and accountants, needed for the completion of the construction, repairs, or reconstruction; and carrying costs such as property taxes, building permits, additional interest on loans, realty taxes, and insurance premiums over and above normal expenses.

§ A.2.5 Other Optional Insurance.
The Owner shall purchase and maintain the insurance selected below.

(Select the types of insurance the Owner is required to purchase and maintain by placing an X in the box(es) next to the description(s) of selected insurance.)

[X] **§ 2.5.1 Cyber Security Insurance** for loss to the Owner due to data security and privacy breach, including costs of investigating a potential or actual breach of confidential or private information. *(Indicate applicable limits of coverage or other conditions in the fill point below.)*

[ ] **§ 2.5.2 Other Insurance**
(List below any other insurance coverage to be provided by the Owner and any applicable limits.)

Coverage	Limits

ARTICLE A.3 CONTRACTOR'S INSURANCE AND BONDS

§ A.3.1 General

§ A.3.1.1 Certificates of Insurance. The Contractor shall provide certificates of insurance acceptable to the Owner evidencing compliance with the requirements in this Article A.3 at the following times: (1) prior to commencement of the Work; (2) upon renewal or replacement of each required policy of insurance; and (3) upon the Owner's written request. The Contractor shall furnish to the Owner copies of any endorsements that are subsequently issued amending coverage or limits. Failure of the contractor to obtain and maintain required insurance shall be grounds for termination of the Contract by the Owner. An additional certificate evidencing continuation of commercial liability coverage, including coverage for completed operations, shall be submitted with the final Application for Payment and thereafter upon renewal or replacement of such coverage until the expiration of the periods required by Section A.3.2.1 and Section A.3.3.1. The certificates will show the Owner as an additional insured, including a copy of the additional insured form attached to the certificate of insurance, on the Contractor's Commercial General Liability and excess or umbrella liability policy or policies. Umbrella excess liability shall be provided for Projects with a contract sum in excess of one million dollars ($1,000,000); not less than one million dollars ($1,000,000) over primary insurance; and retention for self-insured hazards for one million dollars ($1,000,000).

§ A.3.1.2 Deductibles and Self-Insured Retentions. The Contractor shall disclose to the Owner any deductible or self-insured retentions applicable to any insurance required to be provided by the Contractor.

§ A.3.1.3 Additional Insured Obligations. To the fullest extent permitted by law, the Contractor shall cause the commercial general liability coverage to include (1) the Owner, the Architect, and the Architect's consultants as additional insureds for claims caused in whole or in part by the Contractor's negligent acts or omissions during the Contractor's operations; and (2) the Owner as an additional insured for claims caused in whole or in part by the Contractor's negligent acts or omissions for which loss occurs during completed operations. The additional insured coverage shall be primary and non-contributory to any of the Owner's general liability insurance policies and shall apply to both ongoing and completed operations. The Contractor, for your Work, shall maintain completed operations coverage for itself and each additionally insured for at least five (5) years or the Florida Statute of Repose whichever is greater. To the extent commercially available, the additional insured coverage shall be no less than that provided by Insurance Services Office, Inc. (ISO) forms CG 20 10 07 04, CG 20 37 07 04, and, with respect to the Architect and the Architect's consultants, CG 20 32 07 04.

§ A.3.2 Contractor's Required Insurance Coverage

§ A.3.2.1 The Contractor shall purchase and maintain the following types and limits of insurance from an insurance company or insurance companies, rated by A.M. Best "A-" or better, lawfully authorized to issue insurance in the jurisdiction where the Project is located. The Contractor shall maintain the required insurance until the expiration of the period for correction of Work as set forth in Section 12.2.2 of the General Conditions, unless a different duration is stated below:
(If the Contractor is required to maintain insurance for a duration other than the expiration of the period for correction of Work, state the duration.)

§ A.3.2.2 Commercial General Liability

§ 3.2.2.1 Commercial General Liability insurance for the Project written on an occurrence form with policy limits of not less than one million dollars ($1,000,000) each occurrence, one million dollars ($1,000,000) per claimant, two million dollars ($2,000,000) general aggregate, and two million dollars ($2,000,000) aggregate for products-completed operations hazard, providing coverage for claims including

- **.1** damages because of bodily injury, sickness or disease, including occupational sickness or disease, and death of any person;
- **.2** personal injury and advertising injury;
- **.3** damages because of physical damage to or destruction of tangible property, including the loss of use of such property;
- **.4** bodily injury or property damage arising out of completed operations; ~~and~~
- **.5** the Contractor's indemnity obligations under Section 3.18 of the General Conditions;
- **.6** contractual liability for bodily injury and property damage not less than one million dollars ($1,000,000) per claimant and each occurrence; and for property damage two million dollars ($2,000,000) general aggregate; and
- **.7** property damage liability shall provide X, C and U coverage.

§ A.3.2.2.2 The Contractor's Commercial General Liability policy under this Section A.3.2.2 shall not contain an exclusion or restriction of coverage for the following:

- **.1** Claims by one insured against another insured, if the exclusion or restriction is based solely on the fact that the claimant is an insured, and there would otherwise be coverage for the claim.
- **.2** Claims for property damage to the Contractor's Work arising out of the products-completed operations hazard where the damaged Work or the Work out of which the damage arises was performed by a Subcontractor.
- **.3** Claims for bodily injury other than to employees of the insured.
- **.4** Claims for indemnity under Section 3.18 of the General Conditions arising out of injury to employees of the insured.
- **.5** Claims or loss excluded under a prior work endorsement or other similar exclusionary language.
- **.6** Claims or loss due to physical damage under a prior injury endorsement or similar exclusionary language.
- **.7** Claims related to residential, multi-family, or other habitational projects, if the Work is to be performed on such a project.
- **.8** Claims related to roofing, if the Work involves roofing.
- **.9** Claims related to exterior insulation finish systems (EIFS), synthetic stucco or similar exterior coatings or surfaces, if the Work involves such coatings or surfaces.
- **.10** Claims related to earth subsidence or movement, where the Work involves such hazards.
- **.11** Claims related to explosion, collapse and underground hazards, where the Work involves such hazards.

§ 3.2.3 Automobile Liability covering vehicles owned, hired, leased and non-owned vehicles used, by the Construction Manager, with policy limits of not less than one million dollars ($1,000,000) per accident, for bodily injury, death of any person, and property damage arising out of the ownership, maintenance and use of those motor vehicles along with any other statutorily required automobile coverage. The Owner is to be named as additionally insured. The State of Florida has no-fault automobile insurance requirements; the Contractor shall be certain coverage is provided which conforms to any specific stipulation in this law.

§ A.3.2.4 The Contractor may achieve the required limits and coverage for Commercial General Liability and Automobile Liability through a combination of primary and excess or umbrella liability insurance, provided such primary and excess or umbrella insurance policies result in the same or greater coverage as the coverages required under Section A.3.2.2 and A.3.2.3, and in no event shall any excess or umbrella liability insurance provide narrower coverage than the primary policy. The excess policy shall not require the exhaustion of the underlying limits only through the actual payment by the underlying insurers.

DRAFT

§ A.3.2.5 Workers' Compensation at State, Chapter 440 Florida Statutes, and Federal, e.g. Longshoremen's Statute, statutory limits with policy limits not less than one million dollars ($1,000,000.00) each accident, each employee and policy limit.

§ A.3.2.5.1 In the event the Contractor is using leased employees (PEO arrangement), provide the same workers' compensation policy limits as Section 3.2.5; and a waiver of subrogation in favor of alternate employers' endorsement showing the subcontractor as the alternate employer.

§ 3.2.6 Employers' Liability with policy limits not less than one million dollars ($1,000,000) each accident, one million dollars ($1,000,000) each employee, and one million dollars ($1,000,000) policy limit.

§ A.3.2.7 Jones Act, and the Longshore & Harbor Workers' Compensation Act, as required, if the Work involves hazards arising from work on or near navigable waterways, including vessels and docks.

§ 3.2.8 If the Construction Manager is required to furnish professional services as part of the Work, the Construction Manager shall procure Professional Liability insurance covering performance of the professional services, with policy limits of not less than one million dollars ($1,000,000) per claim and one million dollars ($1,000,000) in the aggregate.

§ 3.2.9 If the Work involves the transport, dissemination, use, or release of pollutants, the Construction Manager shall procure Pollution Liability insurance, with policy limits of not less than one million dollars ($1,000,000) per claim and one million dollars ($1,000,000) in the aggregate.

§ 3.2.10 Coverage under Sections 3.2.8 and 3.2.9 may be procured through a Combined Professional Liability and Pollution Liability insurance policy, with combined policy limits of not less than _____ ($ _____) per claim and _____ ($ _____) in the aggregate.

§ 3.2.11 Insurance for maritime liability risks associated with the operation of a vessel, if the Work requires such activities, with policy limits of not less than _____ ($ _____) per claim and _____ ($ _____) in the aggregate.

§ 3.2.12 Insurance for the use or operation of manned or unmanned aircraft, if the Work requires such activities, with policy limits of not less than _____ ($ _____) per claim and _____ ($ _____) in the aggregate.

§ A.3.3 Contractor's Other Insurance Coverage

§ A.3.3.1 Insurance selected and described in this Section A.3.3 shall be purchased from an insurance company or insurance companies lawfully authorized to issue insurance in the jurisdiction where the Project is located. The Contractor shall maintain the required insurance until the expiration of the period for correction of Work as set forth in Section 12.2.2 of the General Conditions, unless a different duration is stated below:
(If the Contractor is required to maintain any of the types of insurance selected below for a duration other than the expiration of the period for correction of Work, state the duration.)

§ 3.3.2 The Contractor shall purchase and maintain the following types and limits of insurance in accordance with Section 3.3.1.
(Select the types of insurance the Contractor is required to purchase and maintain by placing an X in the box(es) next to the description(s) of selected insurance. Where policy limits are provided, include the policy limit in the appropriate fill point.)

[X] **§ 3.3.2.1** Property insurance of the same type and scope satisfying the requirements identified in Section A.2.3, which, if selected in this section A.3.3.2.1, relieves the Owner of the responsibility to purchase and maintain such insurance ~~except insurance required by Section A.2.3.1.3 and Section A.2.3.3~~. The Contractor shall comply with all obligations of the Owner under Section A.2.3 except to the extent provided below. The Contractor shall disclose to the Owner the amount of any deductible, and the Owner shall be responsible for losses within the deductible. Upon request, the Contractor shall provide the Owner with a copy of the property insurance policy or policies required. The Owner shall adjust and settle

the loss with the insurer and be the trustee of the proceeds of the property insurance in accordance with Article 11 of the General Conditions unless otherwise set forth below.
(Where the Contractor's obligation to provide property insurance differs from the Owner's obligations as described under Section A.2.3, indicate such differences in the space below. Additionally, if a party other than the Owner will be responsible for adjusting and settling a loss with the insurer and acting as the trustee of the proceeds of property insurance in accordance with Article 11 of the General Conditions, indicate the responsible party below.)

[ ] **§ 3.3.2.2 Railroad Protective Liability Insurance**, with policy limits of not less than _____ ($ _____) per claim and _____ ($ _____) in the aggregate, for Work within fifty (50) feet of railroad property.

[ ] **§ 3.3.2.3 Asbestos Abatement Liability Insurance**, with policy limits of not less than _____ ($ _____) per claim and _____ ($ _____) in the aggregate, for liability arising from the encapsulation, removal, handling, storage, transportation, and disposal of asbestos-containing materials.

[X] **§ 3.3.2.4** Insurance for physical damage to property while it is in storage and in transit to the construction site, including scaffolding and other equipment used on the Project, on an "all-risks" completed value form.

[ ] **§ 3.3.2.5** Property insurance on an "all-risks" completed value form, covering property owned by the Construction Manager and used on the Project, including scaffolding and other equipment.

[ ] **§ 3.3.2.6 Other Insurance**
(List below any other insurance coverage to be provided by the Construction Manager and any applicable limits.)

Coverage	Limits

§ A.3.4 Performance Bond and Payment Bond
§ A.3.4.1 The Contractor shall provide surety bonds, from a company or companies lawfully authorized to issue surety bonds in the jurisdiction where the Project is located~~, as follows:~~.
~~*(Specify type and penal sum of bonds.)*~~

~~Payment and Performance Bonds shall be AIA Document A312, Payment Bond and Performance Bond, or contain provisions identical to AIA Document A312, current as of the date of this Agreement.~~

§ A.3.4.2 Unless otherwise agreed in writing prior to beginning Work, the Contractor shall furnish and pay for a Performance and Payment Bond on the Project in the amount of one-hundred percent (100%) of the Contract Price. The liability under said Bond shall be coextensive with the Contractor for all damages arising out of Contractor's breach of this agreement or failure to perform, including, but not limited to, delay damages, liquidated damages (if any), completion of punch lists and the Contractors responsibilities under Section 12.2.2.1 of the General Conditions. "Conditional" Payment Bonds under Florida Statutes, Section 713.245, shall not be acceptable. Proper Power of Attorney shall accompany said bonds.

§ A.3.4.3 The Contractor shall provide a Public Construction Bond as required by 255.05 F.S.; the Performance and Payment Bonds shall be on forms provided and approved by the Owner.

§ A.3.4.4 Bonds shall be secured through sources acceptable to the Owner. To be acceptable to the Owner as Surety for Performance and Payment Bonds, a Surety Company shall comply with the following provisions:

.1 the Surety Company must be authorized to do business in the State of Florida; and
.2 the Surety Company shall have been in business and have a record of successful continuous operations for at least five years; and

.3 the Surety Company shall have at least A.M. Best Company Policyholder's Rating of "A-" and "Financial Size Category" of class XI or an equivalent rating from the Insurance Commissioner if not rated by A.M. Best.

ARTICLE A.4 SPECIAL TERMS AND CONDITIONS

Special terms and conditions that modify this Insurance and Bonds Exhibit, if any, are as follows:

DRAFT

AIA Document A201 – 2017

General Conditions of the Contract for Construction

for the following PROJECT:
(Name and location or address)

_____

THE OWNER:
(Name, legal status and address)

School Board of Volusia County Florida
200 North Clara Avenue, DeLand Florida 32720

Document mailing address: 3750 Olson Drive, Daytona Beach Florida 32124

THE ARCHITECT:
(Name, legal status and address

_____

TABLE OF ARTICLES

1 GENERAL PROVISIONS
2 OWNER
3 CONTRACTOR
4 ARCHITECT
5 SUBCONTRACTORS
6 CONSTRUCTION BY OWNER OR BY SEPARATE CONTRACTORS
7 CHANGES IN THE WORK
8 TIME
9 PAYMENTS AND COMPLETION
10 PROTECTION OF PERSONS AND PROPERTY
11 INSURANCE AND BONDS
12 UNCOVERING AND CORRECTION OF WORK
13 MISCELLANEOUS PROVISIONS
14 TERMINATION OR SUSPENSION OF THE CONTRACT
15 CLAIMS AND DISPUTES

DRAFT

ARTICLE 1 GENERAL PROVISIONS

§ 1.1 Basic Definitions

§ 1.1.1 The Contract Documents

All references herein to "Contractor" shall mean "Construction Manager" for Construction Management contract Projects in lieu thereof. The Contract Documents are enumerated in the Agreement between the Owner and Contractor (hereinafter the Agreement) and consist of the Agreement, Conditions of the Contract (A201-2017 General Conditions of the Contract as modified by Owner hereinafter "A201-2017", Supplementary and other Conditions), Drawings, Specifications, Addenda issued prior to execution of the Contract, other documents listed in the Agreement, and Modifications issued after execution of the Contract. A Modification is (1) a written amendment to the Contract signed by both parties, (2) a Change Order, ~~(3) a Construction Change Directive,~~ or (3) a written order for a minor change in the Work issued by the Architect. ~~Unless specifically enumerated in the Agreement, the Contract Documents do not include the advertisement or invitation to bid, Instructions to Bidders, sample forms, other information furnished by the Owner in anticipation of receiving bids or proposals, the Contractor's bid or proposal, or portions of Addenda relating to bidding or proposal requirements.~~

§ 1.1.2.1 Three (3) original Contract documents shall be signed by both parties with one (1) signed document delivered to Contractor after Owner approval.

§ 1.1.3 The Work

The term "Work" means the construction and services required by the Contract Documents, whether completed or partially completed, and includes all other labor, materials, equipment, and services provided or to be provided by the Contractor to fulfill the Contractor's obligations. The Work may constitute the whole or a part of the Project.

§ 1.1.4 The Project

The Project is the total construction of which the Work performed under the Contract Documents may be the whole or a part and which may include construction by the Owner and by Separate Contractors.

§ 1.1.5 The Drawings

The Drawings are the graphic and pictorial portions of the Contract Documents showing the design, location and dimensions of the Work, generally including plans, elevations, sections, details, schedules, and diagrams.

§ 1.1.6 The Specifications

The Specifications are that portion of the Contract Documents consisting of the written requirements for materials, equipment, systems, standards and workmanship for the Work, and performance of related services.

§ 1.1.7 Instruments of Service

Instruments of Service are representations, in any medium of expression now known or later developed, of the tangible and intangible creative work performed by the Architect and the Architect's consultants under their respective professional services agreements. Instruments of Service may include, without limitation, studies, surveys, models, sketches, drawings, specifications, and other similar materials.

§ 1.1.8 Initial Decision Maker

The Architect ~~Initial Decision Maker~~ is the person identified in the Agreement to render initial decisions on Claims in accordance with Section 15.2. The Initial Decision Maker shall not show partiality to the Owner or Contractor and shall not be liable for results of interpretations or decisions rendered in good faith.

§ 1.1.9 Third Party Beneficiary

Nothing contained in the Contract Documents shall create a contractual relationship between the Owner and any third party; however, it is understood and agreed that the Owner is an intended third-party beneficiary of all contracts for design or engineering services, all subcontracts, purchase orders as well as all agreements between the Contractor and third parties. The Contractor shall incorporate the obligations of this Contract into its respective subcontracts, supply agreements and purchase orders.

DRAFT

§ 1.2 Correlation and Intent of the Contract Documents

§ 1.2.1 The intent of the Contract Documents is to include all items necessary for the proper execution and completion of the Work by the Contractor. The Contract Documents are complementary, and what is required by one shall be as binding as if required by all; performance by the Contractor shall be required only to the extent consistent with the Contract Documents and reasonably inferable from them as being necessary to produce the intended ~~indicated~~ results.

§ 1.2.1.1 The invalidity of any provision of the Contract Documents shall not invalidate the Contract or its remaining provisions. If it is determined that any provision of the Contract Documents violates any law, or is otherwise invalid or unenforceable, then that provision shall be revised to the extent necessary to make that provision legal and enforceable. In such case the Contract Documents shall be construed, to the fullest extent permitted by law, to give effect to the parties' intentions and purposes in executing the Contract.

§ 1.2.2 Organization of the Specifications into divisions, sections and articles, and arrangement of Drawings shall not control the Contractor in dividing the Work among Subcontractors or in establishing the extent of Work to be performed by any trade.

§ 1.2.3 Unless otherwise stated in the Contract Documents, words that have well-known technical or construction industry meanings are used in the Contract Documents in accordance with such recognized meanings.

§ 1.2.4 The term "Provide", as used in the Contract Documents, includes furnishing all labor, supervision, tools, materials, supplies, equipment, shop drawings, product data and samples, together with all services, accessories and costs associated with performance of the work, for production of an item or system usable in the completed project.

§ 1.2.5 Where conflict or discrepancies exists within or between the Contract Documents or between the Contract Documents and applicable industry standards or applicable codes, ordinances, or other legal requirements, the more stringent requirements shall apply; otherwise, the following order of precedence shall be used.

.1 The Agreement
.2 Supplementary Conditions, if any
.3 These General Conditions
.4 Addenda, if any, with those of later date having precedence over those of earlier date
.5 Specifications
.6 Drawings

§ 1.2.6 Any organization's document referred to, unless otherwise specified in the Specifications, shall mean the latest edition of such document adopted and published prior to the date of the Specifications, and such documents shall be a part of the Specifications with the same effect as if written therein in full.

§ 1.2.7 Dimensions indicated on any Drawings are required dimensions, regardless of measurement per given scale. The Contractor shall verify at the Site necessary levels, measurements, etc., for proper and complete fabrication, assembly and installation of Work. Where dimensions are not indicated, and exact location is not apparent, the Contractor shall notify the Owner and Architect. Inadvertent discrepancies or omissions of details, figures or notes on one drawing, where another drawing correctly sets forth such information, shall not be cause for additional charges or claims.

§ 1.2.8 The interrelation of the Specifications, the Drawings and the Schedules is as follows: The Specifications determine the nature of the setting of the various materials; the Drawings establish the quantities, dimension and details; and the Schedules give the locations. Should the Drawings disagree in themselves, or with the Specifications, the better quality or greater quantity of work or materials shall be estimated upon and, unless otherwise ordered by the Architect in writing, shall be performed or furnished. Explanatory notes on Drawings take precedence over Specifications. Figures given on Drawings take precedence over scaled measurements, and large-scale details take precedence over small Drawings.

§ 1.3 Capitalization

Terms capitalized in these General Conditions include those that are (1) specifically defined, (2) the titles of numbered articles, or (3) the titles of other documents published by the American Institute of Architects.

§ 1.4 Interpretation
In the interest of brevity the Contract Documents frequently omit modifying words such as "all" and "any" and articles such as "the" and "an," but the fact that a modifier or an article is absent from one statement and appears in another is not intended to affect the interpretation of either statement.

§ 1.5 Ownership and Use of Drawings, Specifications, and Other Instruments of Service
§ 1.5.1 Unless otherwise provided in the Owner's Agreement with the Architect, the Architect and the Architect's consultants shall be deemed the authors and owners of their respective Instruments of Service, including the Drawings and Specifications, and retain all common law, statutory, and other reserved rights in their Instruments of Service, including copyrights. The Contractor, Subcontractors, Sub-subcontractors, and suppliers shall not own or claim a copyright in the Instruments of Service. Submittal or distribution to meet official regulatory requirements or for other purposes in connection with the Project is not to be construed as publication in derogation of the Architect's or Architect's consultants' reserved rights.

§ 1.5.2 The Contractor, Subcontractors, Sub-subcontractors, and suppliers are authorized to use and reproduce the Instruments of Service provided to them, subject to any protocols established pursuant to Sections 1.7 and 1.8, solely and exclusively for execution of the Work. All copies made under this authorization shall bear the copyright notice, if any, shown on the Instruments of Service. The Contractor, Subcontractors, Sub-subcontractors, and suppliers may not use the Instruments of Service on other projects or for additions to the Project outside the scope of the Work without the specific written consent of the Owner, Architect, and the Architect's consultants.

§ 1.6 Notice
§ 1.6.1 Except as otherwise provided in Section 1.6.2, where the Contract Documents require one party to notify or give notice to the other party, such notice shall be provided in writing to the designated representative of the party to whom the notice is addressed and shall be deemed to have been duly served if delivered in person, by mail, by courier, or by electronic transmission if a method for electronic transmission is set forth in the Agreement.

§ 1.6.2 Notice of Claims as provided in Section 15.1.3 shall be provided in writing and shall be deemed to have been duly served only if delivered to the designated representative of the party to whom the notice is addressed by certified or registered mail, or by courier providing proof of delivery.

§ 1.6.3 Written notice requirements of this Contract imposed upon the Contractor shall be strictly construed and such requirements are a condition precedent to Contractor pursuing any rights or remedies hereunder. Contractor expressly waives its rights to claim any waiver by the Owner of such notice requirements based upon the Owner having actual knowledge, implied, verbal or constructive notice, suffering lack of prejudice or any other grounds as substitute for the failure of the Contractor to comply with the express written notice requirements herein.

§ 1.7 Digital Data Use and Transmission
§ 1.7.1 The parties shall agree upon protocols governing the transmission and use of Instruments of Service or any other information or documentation in digital form. ~~The parties will use AIA Document E203™–2013, Building Information Modeling and Digital Data Exhibit, to establish the protocols for the development, use, transmission, and exchange of digital data.~~

§ 1.7.2 The Owner, at its discretion and direction, intends to utilize Procore Construction Management software platform which is licensed to the Owner. Access to the platform shall be provided to the Contractor at no cost to the Contractor.

- **.1** The Procore Certification Program, as applicable to the Contractor's software access, shall be provided to those deemed necessary by the Contractor and Owner for the Project. The program is a self-paced webinar format intended to familiarize the user with the software. Time will be allotted to the Contractor for this purpose.
- **.2** The Contractor shall perform the following:
  - **.1** upload pertinent documents and files within the Procore software as established by the Owner; and
  - **.2** utilize Procore Tools to manage specific data based documents and information; and
  - **.3** collaborate and communicate with the Owner and Consultants within the Procore software; and
  - **.4** modify the drawings within the Procore software throughout the Project in order to create as built drawings; and

.5 other Owner assigned and/or required Procore software processes necessary for the successful completion of the Project.

§ 1.8 Building Information Models Use and Reliance

Any use of, or reliance on, all or a portion of a building information model without agreement to protocols governing the use of, and reliance on, the information contained in the model ~~and without having those protocols set forth in AIA Document E203™–2013, Building Information Modeling and Digital Data Exhibit, and the requisite AIA Document G202™–2013, Project Building Information Modeling Protocol Form,~~ shall be at the using or relying party's sole risk and without liability to the other party and its contractors or consultants, the authors of, or contributors to, the building information model, and each of their agents and employees.

§ 1.9 Public Records Compliance

§ 1.9.1 If the Contractor has questions regarding the application of Chapter 119, Florida Statutes, to the Contractor's duty to provide public records relating to this contract, contact the Custodian of Public Records at (386) 734-7190 extension 20119, custserv@volusia.k12.fl.us or 200 North Clara Avenue, DeLand Florida 32720. The Contractor shall:

.1 Keep and maintain public records required by the school district to perform the service; and

.2 Upon request from the school district's custodian of public records, provide the school district with a copy of the requested records or allow the records to be inspected or copied within a reasonable time at a cost that does not exceed the cost provided in this chapter or as otherwise provided by law; and

.3 Ensure that public records that are exempt or confidential and exempt from public records disclosure requirements are not disclosed except as authorized by law for the duration of the contract term and following completion of the contract if the Contractor does not transfer the records to the school district; and

.4 Upon completion of the contract, transfer, at no cost, to the school district all public records in possession of the Contractor or keep and maintain public records required by the school district to perform the service. If the Contractor transfers all public records to the school district upon completion of the contract, the Contractor shall destroy any duplicate public records that are exempt or confidential and exempt from public records disclosure requirements. If the Contractor keeps and maintains public records upon completion of the contract, the Contractor shall meet all applicable requirements for retaining public records. All records stored electronically must be provided to the school district, upon request from the school district's custodian of public records, in a format that is compatible with the information technology systems of the school district.

§ 1.9.2 Failure of the Contractor to abide by the terms of this provision shall be deemed a material breach of this agreement and the School District of Volusia County may enforce the terms of this provision in the form of a court proceeding and shall, as a prevailing party, be entitled to reimbursement of all attorney's fees and costs associated with that proceeding. This provision shall survive termination or expiration of the contract.

ARTICLE 2 OWNER

§ 2.1 General

§ 2.1.1 The Owner is the person or entity identified as such in the Agreement and is referred to throughout the Contract Documents as if singular in number. The term "Owner" means the Owner or the Owner's authorized representative, who shall be the Superintendent or designee. The Owner's Representative is authorized to act on the Owner's behalf as provided herein and in applicable law, regulation or ordinance. The Owner's Representative has the authority to reject unsatisfactory work and to stop the work if necessary to ensure its proper execution. Failure of the Owner's Representative, in any one or more instances, to insist on strict performance of any of the terms of the Contract or to exercise any option herein conferred shall not be construed as a waiver or relinquishment of future insistence of any such terms or options. ~~Owner shall designate in writing a representative who shall have express authority to bind the Owner with respect to all matters requiring the Owner's approval or authorization. Except as otherwise provided in Section 4.2.1, the Architect does not have such authority. The term "Owner" means the Owner or the Owner's authorized representative.~~

§ 2.1.2 The Owner shall furnish to the Contractor, within fifteen days after receipt of a written request, information necessary and relevant for the Contractor to evaluate, give notice of, or enforce mechanic's lien rights. Such information

shall include a correct statement of the record legal title to the property on which the Project is located, usually referred to as the site, and the Owner's interest therein.

§ 2.2 Evidence of the Owner's Financial Arrangements

§ 2.2.1 Where the Owner has designated information furnished under this Section 2.2 as "confidential," the Contractor shall keep the information confidential and shall not disclose it to any other person. However, the Contractor may disclose "confidential" information, after seven (7) days' notice to the Owner, where disclosure is required by law, including a subpoena or other form of compulsory legal process issued by a court or governmental entity, or by court or arbitrator(s) order. The Contractor may also disclose "confidential" information to its employees, consultants, sureties, Subcontractors and their employees, Sub-subcontractors, and others who need to know the content of such information solely and exclusively for the Project and who agree to maintain the confidentiality of such information. ~~Prior to commencement of the Work and upon written request by the Contractor, the Owner shall furnish to the Contractor reasonable evidence that the Owner has made financial arrangements to fulfill the Owner's obligations under the Contract. The Contractor shall have no obligation to commence the Work until the Owner provides such evidence. If commencement of the Work is delayed under this Section 2.2.1, the Contract Time shall be extended appropriately.~~

~~**§ 2.2.2** Following commencement of the Work and upon written request by the Contractor, the Owner shall furnish to the Contractor reasonable evidence that the Owner has made financial arrangements to fulfill the Owner's obligations under the Contract only if (1) the Owner fails to make payments to the Contractor as the Contract Documents require; (2) the Contractor identifies in writing a reasonable concern regarding the Owner's ability to make payment when due; or (3) a change in the Work materially changes the Contract Sum. If the Owner fails to provide such evidence, as required, within fourteen days of the Contractor's request, the Contractor may immediately stop the Work and, in that event, shall notify the Owner that the Work has stopped. However, if the request is made because a change in the Work materially changes the Contract Sum under (3) above, the Contractor may immediately stop only that portion of the Work affected by the change until reasonable evidence is provided. If the Work is stopped under this Section 2.2.2, the Contract Time shall be extended appropriately and the Contract Sum shall be increased by the amount of the Contractor's reasonable costs of shutdown, delay and start-up, plus interest as provided in the Contract Documents.~~

~~**§ 2.2.3** After the Owner furnishes evidence of financial arrangements under this Section 2.2, the Owner shall not materially vary such financial arrangements without prior notice to the Contractor.~~

~~**§ 2.2.4** Where the Owner has designated information furnished under this Section 2.2 as "confidential," the Contractor shall keep the information confidential and shall not disclose it to any other person. However, the Contractor may disclose "confidential" information, after seven (7) days' notice to the Owner, where disclosure is required by law, including a subpoena or other form of compulsory legal process issued by a court or governmental entity, or by court or arbitrator(s) order. The Contractor may also disclose "confidential" information to its employees, consultants, sureties, Subcontractors and their employees, Sub-subcontractors, and others who need to know the content of such information solely and exclusively for the Project and who agree to maintain the confidentiality of such information.~~

§ 2.3 Information and Services Required of the Owner

§ 2.3.1 Except for permits and fees that are the responsibility of the Contractor under the Contract Documents, including those required under Section 3.7.1, the Owner shall secure and pay for necessary approvals, easements, assessments and charges required for construction, use or occupancy of permanent structures or for permanent changes in existing facilities.

§ 2.3.2 The Owner ~~shall~~ may, at Owner's sole discretion, retain an architect lawfully licensed to practice architecture, or an entity lawfully practicing architecture, in the jurisdiction where the Project is located. That person or entity is identified as the Architect in the Agreement and is referred to throughout the Contract Documents as if singular in number.

§ 2.3.3 If the employment of the Architect terminates, the Owner ~~shall~~ may employ a successor ~~to whom the Contractor has no reasonable objection and~~ whose status under the Contract Documents shall be that of the Architect.

§ 2.3.4 The Owner shall furnish surveys to the extent available to the Owner, without being responsible for the accuracy of completeness of same, describing physical characteristics, legal limitations and utility locations for the site of the

Project, and a legal description of the site. ~~The Contractor shall be entitled to rely on the accuracy of such survey information furnished by the Owner but shall exercise proper precautions relating to the safe performance of the Work.~~

§ 2.3.5 The Owner shall furnish information or services required of the Owner by the Contract Documents with reasonable promptness. The Owner shall also furnish any other information or services under the Owner's control and relevant to the Contractor's performance of the Work with reasonable promptness after receiving the Contractor's written request for such information or services.

§ 2.3.6 Unless otherwise provided in the Contract Documents, the Owner shall furnish to the Contractor one copy of the Contract Documents for purposes of making reproductions pursuant to Section 1.5.2.

§ 2.4 Owner's Right to Stop the Work

§ 2.4.1 If the Contractor fails to correct Work that is not in accordance with the requirements of the Contract Documents as required by Section 12.2 or repeatedly fails to carry out Work in accordance with the Contract Documents, the Owner may issue a written order to the Contractor to stop the Work, or any portion thereof, until the cause for such order has been eliminated; however, the right of the Owner to stop the Work shall not give rise to a duty on the part of the Owner to exercise this right for the benefit of the Contractor or any other person or entity, except to the extent required by Section 6.1.3. The Owner shall incur no liability for delays occasioned by any stop-work order issued in accordance with this paragraph.

§ 2.4.2 If, after consultation with the Architect, suspension of the Work is warranted by reason of unforeseen conditions which may adversely affect the quality of the Work if such Work were continued, the Owner may suspend the Work by written notice to the Contractor. In such event, the Contract Time shall be adjusted accordingly, and the Contract Sum shall be adjusted to the extent, if any, that additional costs are incurred by reason of such suspension. If the Contractor, in its reasonable judgment, believes that a suspension is warranted by reason of unforeseen circumstances which may adversely affect the quality of the Work if the Work were continued, the Contractor shall immediately notify the Owner and the Architect of such belief and describe with particularity the reasons therefor.

§ 2.5 Owner's Right to Carry Out the Work

If the Contractor defaults or neglects to carry out the Work in accordance with the Contract Documents and fails within a ~~five~~ ten-day period after receipt of notice from the Owner to commence and continue correction of such default or neglect with diligence and promptness, the Owner may, without prejudice to other remedies the Owner may have, ~~correct such default or neglect. Such action by the Owner and amounts charged to the Contractor are both subject to prior approval of the Architect and the Architect~~ commence and continue to carry out the Work. The Architect may, pursuant to Section 9.5.1, withhold or nullify a Certificate for Payment in whole or in part, to the extent reasonably necessary to reimburse the Owner for the reasonable cost of correcting such deficiencies, including Owner's expenses and compensation for the Architect's additional services made necessary by such default, neglect, or failure. If current and future payments are not sufficient to cover such amounts, the Contractor shall pay the difference to the Owner. ~~If the Contractor disagrees with the actions of the Owner or the Architect, or the amounts claimed as costs to the Owner, the Contractor may file a Claim pursuant to Article 15.~~ The right of Owner to stop the Work pursuant to this Section 2.5 shall not give rise to any duty on the part of the Owner to exercise this right for the benefit of the Contractor or any other person or entity.

ARTICLE 3 CONTRACTOR

§ 3.1. General

§ 3.1.1 The Contractor is the person or entity identified as such in the Agreement and is referred to throughout the Contract Documents as if singular in number. The Contractor shall be lawfully licensed, if required in the jurisdiction where the Project is located. The Contractor shall designate in writing a representative who shall have express authority to bind the Contractor with respect to all matters under this Contract. The term "Contractor" means the Contractor or the Contractor's authorized representative.

§ 3.1.2 The Contractor shall perform the Work in accordance with the Contract Documents.

DRAFT

§ 3.1.3 The Contractor shall not be relieved of its obligations to perform the Work in accordance with the Contract Documents either by activities or duties of the Architect in the Architect's administration of the Contract, or by tests, inspections or approvals required or performed by persons or entities other than the Contractor.

§ 3.2 Review of Contract Documents and Field Conditions by Contractor

§ 3.2.1 Execution of the Contract by the Contractor is a representation that the Contractor has visited the site, become ~~generally~~ familiar with local conditions under which the Work is to be performed, and correlated personal observations with requirements of the Contract Documents. Familiarity with local conditions shall include, without limitation, (1) the condition and layout of the Project site and surrounding locale, (2) available labor supply and costs, (3) available subcontractors and suppliers, (4) the prevailing climate, including the impact of rain and saltwater environment, (5) available material and equipment and costs, and (6) other similar issues. Extra payments will not be authorized for Work that could have been foreseen by careful examination of the Site. Execution of the Contract shall constitute acceptance, by the Contractor, of existing Site conditions as a part of the requirements for this Work, except as to concealed and unknown conditions as provided in Section 3.7.4. Contractor shall make no claim for additional time or money based upon its failure to comply with this Paragraph.

§ 3.2.2 Because the Contract Documents are complementary, the Contractor shall, before starting each portion of the Work, carefully study and compare the various Contract Documents relative to that portion of the Work, as well as the information furnished by the Owner pursuant to Section 2.3.4, shall take field measurements of any existing conditions related to that portion of the Work, and shall observe any conditions at the site affecting it. These obligations are for the purpose of facilitating coordination and construction by the Contractor and are not for the purpose of discovering errors, omissions, or inconsistencies in the Contract Documents; however, the Contractor shall promptly report to the Architect any errors, inconsistencies or omissions discovered by or made known to the Contractor as a request for information in such form as the Architect may require. It is recognized that the Contractor's review is made in the Contractor's capacity as a contractor and not as a licensed design professional, unless otherwise specifically provided in the Contract Documents.

§ 3.2.3 The Contractor is not required to ascertain that the Contract Documents are in accordance with applicable laws, statutes, ordinances, codes, rules and regulations, or lawful orders of public authorities, but the Contractor shall promptly report to the Architect any nonconformity discovered by or made known to the Contractor as a request for information in such form as the Architect may require.

§ 3.2.4 If the Contractor believes that additional cost or time is involved because of clarifications or instructions the Architect issues in response to the Contractor's notices or requests for information pursuant to Sections 3.2.2 or 3.2.3, the Contractor shall submit Claims as provided in Article 15. If the Contractor fails to perform the obligations of Sections 3.2.2 or 3.2.3, the Contractor shall pay such costs and damages to the Owner, subject to Section 15.1.7, as would have been avoided if the Contractor had performed such obligations. If the Contractor performs those obligations, the Contractor shall not be liable to the Owner or Architect for damages resulting from errors, inconsistencies or omissions in the Contract Documents, for differences between field measurements or conditions and the Contract Documents, or for nonconformities of the Contract Documents to applicable laws, statutes, ordinances, codes, rules and regulations, and lawful orders of public authorities.

§ 3.3 Supervision and Construction Procedures

§ 3.3.1 The Contractor shall supervise and direct the Work, using the Contractor's best skill and attention and in accordance with all local and Florida licensing requirements and Florida Building Code. The Contractor shall be solely responsible for, and have control over, construction means, methods, techniques, sequences, and procedures, and for coordinating all portions of the Work under the Contract. If the Contract Documents give specific instructions concerning construction means, methods, techniques, sequences, or procedures, the Contractor shall evaluate the jobsite safety thereof and shall be solely responsible for the jobsite safety of such means, methods, techniques, sequences, or procedures. If the Contractor determines that such means, methods, techniques, sequences or procedures may not be safe, the Contractor shall give timely notice to the Owner and Architect, and shall propose alternative means, methods, techniques, sequences, or procedures. The Architect shall evaluate the proposed alternative solely for conformance with the design intent for the completed construction. Unless the Architect objects to the Contractor's proposed alternative, the Contractor shall perform the Work using its alternative means, methods, techniques, sequences, or procedures.

DRAFT

§ 3.3.2 The Contractor shall be responsible to the Owner for acts and omissions of the Contractor's employees, Subcontractors and their agents and employees, and other persons or entities performing portions of the Work for, or on behalf of, the Contractor or any of its Subcontractors. The Contractor agrees to remove from the Project any employee, Subcontractor, or Subcontractor employee that commits any breach of the Contract Documents or any breach of the Owner's written rules and regulations regarding jobsite conduct.

§ 3.3.3 The Contractor shall enforce strict discipline and good order among the Contractor's employees and other persons carrying out the Work. The Contractor shall not permit employment of unfit persons or persons not properly skilled in tasks assigned to them. The Contractor shall require all construction personnel to maintain a neat general appearance at all times. Shirts, trousers and proper shoes are required apparel. The display of vulgar words, signs or figures is prohibited. Sandals and flip-flops are prohibited on the Project site. The use of radios, sound producing devices and the like are prohibited on the Project site. The Contractor shall not be permitted to use restrooms or other sanitary facilities within the Owner's existing buildings or on-site facilities.

§ 3.3.4 The Contractor shall be responsible for inspection of portions of Work already performed to determine that such portions are in proper condition to receive subsequent Work. Neither the presence or absence of the Owner or Architect shall relieve the Contractor from any requirements of the Contract Documents.

§ 3.3.5 The Contractor will be responsible for all building grades, lines, levels, etc., required for layout of the Work.

§ 3.3.6 If required by Owner on a Project where applicable, at the earliest possible time after the commencement of the Work on the Project site, the Contractor shall have all property corners and benchmarks verified or established by a state-licensed land surveyor, shall locate the Project on the Project site, establishing necessary reference marks and axes from which the Work accurately can progress, shall furnish Architect evidence of such verification and shall report at once any errors discovered during the process of such verification.

§ 3.3.7 If any of the Work is required to be inspected or approved by any public authority, the Contractor shall cause such inspection or approval to be performed. No inspection performed or failed to be performed by the Owner hereunder shall be a waiver of any of the Contractor's obligations hereunder or be construed as an approval or acceptance of the Work or any part thereof.

§ 3.3.8 The Contractor acknowledges that it is the Contractor's responsibility to hire all personnel for the proper and diligent prosecution of the Work and the Contractor shall use its best efforts to maintain labor peace for the duration of the Project. In the event of a labor dispute of the Contractor, its subcontractors or suppliers, the Contractor shall not be entitled to any increase in the Contract Sum.

§ 3.4 Labor and Materials

§ 3.4.1 Unless otherwise provided in the Contract Documents, the Contractor shall provide and pay for labor, materials, equipment, tools, construction equipment and machinery, water, heat, utilities, transportation, and other facilities and services necessary for proper execution and completion of the Work, whether temporary or permanent and whether or not incorporated or to be incorporated in the Work.

§ 3.4.2 Equal Opportunity

§ 3.4.2.1 ~~Except in the case of minor changes in the Work approved by the Architect in accordance with Section 3.12.8 or ordered by the Architect in accordance with Section 7.4, the Contractor may make substitutions only with the consent of the Owner, after evaluation by the Architect and in accordance with a Change Order or Construction Change Directive.~~ The Contractor shall maintain policies of employment as follows: (1) the Contractor and the Contractor's Subcontractors shall not discriminate against any employee or applicant for employment because of race, gender, religion, national origin, ethnicity, sexual orientation, age or disability; (2) the Contractor and the Contractor's Subcontractors shall, in all solicitations or advertisements for employees placed by them or on their behalf, state that all qualified applicants will receive consideration for employment without regard to race, gender, religion, national origin, ethnicity, sexual orientation, age or disability.

§ 3.4.3 The Contractor may make substitutions only with the consent of the Owner, after evaluation by the Architect and in accordance with a Change Order of other appropriate written directive by the Owner ~~shall enforce strict discipline and~~

~~good order among the Contractor's employees and other persons carrying out the Work. The Contractor shall not permit employment of unfit persons or persons not properly skilled in tasks assigned to them~~.

§ 3.4.4 Value Engineering Incentive

§ 3.4.4.1 Any proposal initiated and developed by the Contractor for variation from contractual requirements, which to be acceptable under the Contract would necessitate issuance of a contractual change and which reduces the cost of performing the Contract, without degrading operational functions: e.g., performance, reliability or maintainability of the item. Such proposals would be submitted by the Contractor to the Architect in the same form as prescribed for any other proposal, which would likewise necessitate a change in the contractual requirements but would include a statement that they are a proposed Value Engineering Change subject to the operation of this clause.

§ 3.4.4.2 The Architect will be the sole judge of acceptability, and no substitute will be ordered, installed, used or initiated without the Architect's prior written acceptance which will be evidenced by Change Order. However, any Value Engineering Change accepted by the Architect shall not result in any increase in the Contract Price or Contract Time. By making a request for a Value Engineering Change, the Contractor agrees to pay directly to the Architect all Architect's fees and charges related to the Architect's review of the request for Value Engineering Change, whether or not the Architect accepts the request. The Owner may require the Contractor to furnish at the Contractor's expense a special performance guarantee or other surety with respect to any substitute approved after award of the Contract.

§ 3.4.5 Owner Direct Purchase

§ 3.4.5.1 The Owner is tax exempt and may wish to exercise its right to purchase directly various construction materials, supplies and equipment that may be part of the Contract. The Owner will, via its purchase orders, purchase that material and the Contractor shall assist the Owner in the preparation of purchase orders. The Owner may direct the Contractor to prepare the purchase order on the Owner's form and make ready for verification and execution by the Owner. The materials shall be purchased from the vendors and or suppliers originally selected by the Contractor, for the price originally negotiated by the Contractor. Within thirty (30) days of the Notice to Proceed (NTP) the Contractor shall prepare a complete list of materials, supplies and equipment, including the cost of each item, for the Project and the Owner will advise the Contractor in writing which items from the list the Owner wishes to purchase directly.

§ 3.4.5.2 At a time deemed acceptable to the Owner, the Contract amount shall be reduced by the net, undiscounted amount of the purchase order, plus all sales taxes and surtax as levied. Issuance of the purchase orders by the Owner does not change any of the Contractor's responsibilities regarding material purchases, or installations, with the exception of the payments for the materials purchased. The Contractor remains responsible for coordination, correct quantities ordered, submittals, protection, storage, scheduling, shipping, security, expedition, receiving and unloading, certifying the accuracy of shipping tickets and invoices, installation, cleaning, all applicable warranties and that all materials purchased meet the requirements of the Contract Documents. The Contractor shall certify all invoices as accurate and acceptable and forward to the Owner the certified invoices for payment by the Owner.

§ 3.4.5.3 In the event that materials, supplies or equipment purchased under this option are defective or rejected for any reason whatsoever, and it becomes necessary in the opinion of the Contractor to initiate legal action against the responsible party, the Owner agrees to assign and subordinate to the Contractor any claims the Owner has against the responsible party resulting from the purchase order and to execute any legal documents necessary to accomplish the assignment, subordination or subrogation of such claims, and to cooperate with the Contractor in such legal action.

§ 3.4.5.4 The Contractor agrees to execute the Owner's document "Contractor's Direct Material Purchase Affidavit" and to submit the affidavit to the Owner along with the above described list of materials, supplies and equipment, as agreed to between the Owner and Contractor. Tax savings will be returned to the Owner via Change Order.

§ 3.5 Warranty

§ 3.5.1 The Contractor warrants to the Owner and Architect that materials and equipment furnished under the Contract will be of good quality and new unless the Contract Documents require or permit otherwise. The Contractor further warrants that the Work will conform to the requirements of the Contract Documents and will be free from defects, except for those inherent in the quality of the Work the Contract Documents require or permit. Work, materials, or equipment not conforming to these requirements, including substitutions not properly approved and authorized, may be considered defective. The Contractor's warranty excludes remedy for damage or defect caused by abuse, alterations to the Work not

executed by the Contractor, improper or insufficient maintenance, improper operation, or normal wear and tear and normal usage. If required by the Architect or Owner, the Contractor shall furnish satisfactory evidence as to the kind and quality of materials and equipment.

§ 3.5.2 All material, equipment, or other special warranties required by the Contract Documents shall be issued in the name of the Owner, or shall be transferable to the Owner, and shall commence in accordance with Section 9.8.4.

§ 3.6 Taxes

The Contractor shall pay sales, consumer, use and similar taxes for the Work in accordance with the laws of the state and other taxing authorities in the jurisdiction where the Project is located ~~provided by the Contractor~~ that are legally enacted when bids are received or negotiations concluded, whether or not yet effective or merely scheduled to go into effect.

§ 3.7 Permits, Fees, Notices and Compliance with Laws

§ 3.7.1 Unless otherwise provided in the Contract Documents, the Contractor shall secure and pay for the building permit as well as for other permits, fees, licenses, and inspections by government agencies necessary for proper execution and completion of the Work that are customarily secured after execution of the Contract and legally required at the time bids are received or negotiations concluded. The Contractor shall procure all certificates of inspection, use, occupancy, permits and licenses, pay all charges and fees and give all notices necessary and incidental to the due and lawful prosecution of the Work. Certificates of inspection, use and occupancy shall be delivered to the Owner upon completion of the Work in sufficient time for occupation of the Project in accordance with the approved schedule for the Work. The costs of such procurement, payment and delivery are included within the Contract Sum.

§ 3.7.1.1 Certain permits, regulations and fees may apply to work involved in this Project when such work takes place beyond the limits of the school site. This may include but not be limited to hauling and disposal of materials and debris resulting from demolition. The Contractor shall obtain any such permits, comply with all applicable regulations and pay the cost of any and all fees required by such offsite work.

§ 3.7.1.2 The Owner's building department is the authority having jurisdiction for building code compliance unless otherwise provided in the Contract Documents. The Owner's building permit is required to be issued before construction may commence and will be furnished to the Contractor at no cost upon compliance with permit application requirements.

§ 3.7.2 The Contractor shall comply with and give notices required by applicable laws, statutes, ordinances, codes, rules and regulations, and lawful orders of public authorities applicable to performance of the Work. The Contractor shall comply with all applicable federal, state and county, and city statutes, safety regulations, codes, ordinances and orders, including the Occupational Safety and Health Administration Act of 1970 (OSHA) as amended from time to time.

§ 3.7.3 If the Contractor performs Work ~~knowing it to be~~ contrary to applicable laws, statutes, ordinances, codes, rules and regulations, or lawful orders of public authorities, the Contractor shall assume appropriate responsibility for such Work and shall bear the costs attributable to correction.

§ 3.7.4 Concealed or Unknown Conditions (Excluding Claims for Unsuitable Soils)

If the Contractor encounters conditions at the site that are (1) subsurface or otherwise concealed physical conditions that differ materially from those indicated in the Contract Documents or (2) unknown physical conditions of an unusual nature that differ materially from those ordinarily found to exist and generally recognized as inherent in construction activities of the character provided for in the Contract Documents, the Contractor shall promptly provide notice to the Owner and the Architect before conditions are disturbed and in no event later than 14 days after first observance of the conditions. The Architect will promptly investigate such conditions and, if the Architect determines that they differ materially and cause an increase or decrease in the Contractor's cost of, or time required for, performance of any part of the Work, will recommend that an equitable adjustment be made in the Contract Sum or Contract Time, or both. If the Architect determines that the conditions at the site are not materially different from those indicated in the Contract Documents and that no change in the terms of the Contract is justified, the Architect shall promptly notify the Owner and Contractor, stating the reasons. No adjustment in Contract Sum or Contract Time shall be allowed pursuant to this Article to the extent the concealed or unknown condition should have been reasonably discovered by the Contractor during pre-bid site inspections, review, or preconstruction services. If either party disputes the Architect's determination or recommendation, that party may submit a Claim as provided in Article 15.

§ 3.7.5 If, in the course of the Work, the Contractor encounters human remains or recognizes the existence of burial markers, archaeological sites or wetlands not indicated in the Contract Documents, the Contractor shall immediately suspend any operations that would affect them and shall notify the Owner and Architect. Upon receipt of such notice, the Owner shall promptly take any action necessary to obtain governmental authorization required to resume the operations. The Contractor shall continue to suspend such operations until otherwise instructed by the Owner but shall continue with all other operations that do not affect those remains or features. Requests for adjustments in the Contract Sum and Contract Time arising from the existence of such remains or features may be made as provided in Article 15.

§ 3.7.6 Claims for Unsuitable Soils "Unsuitable soil" does not include soil with high or low moisture content or soil adversely affected by weather conditions and no claim for additional cost will be accepted based solely on the moisture content of excavated material. If the excavated material is unsatisfactory for the specified use on the project solely because of either high or low moisture content or the soil is adversely affected by weather conditions, the Contractor may, in its discretion, either (1) process the material to adjust the moisture content to the specified condition or an acceptable condition if not specified, or (2) remove the material and replace it with satisfactory material. Contractor's election of either option will be at Contractor's expense with no additional cost to the Owner.

§ 3.7.7 E-Verify

§ 3.7.7.1 State of Florida, Office of the Governor, Executive Order 11-116 (superseding Executive Order 11-02) requires all agencies under the direction of the Governor to verify the employment eligibility of all new employees through the U.S. Department of Homeland Security's E-Verify system. Further, in conjunction with Section 448.095 F.S., the Contractor is directed to include as a condition of all contracts for the provision of goods or services to the School Board of Volusia County in excess of nominal value, an express requirement that the Contractor utilizes the U.S. Department of Homeland Security's E-Verify system to verify the employment eligibility of all new employees hired by the Contractor during the contract term, and an express requirement that the Contractor include in such subcontracts the requirement that subcontractors performing work or providing services pursuant to the state contract utilize the E-Verify system to verify the employment eligibility of all new employees hired by the subcontractor during the contract term. To enroll in the E-Verify system employers should visit www.e-verify.gov.

§ 3.7.7.2 Failure to comply shall be cause for termination of contract by the Owner, at its sole discretion. The Contractor is liable for any additional costs incurred as a result of the termination of Contract, Section 448.095(2) F.S.

§ 3.7.7.3 The Contractor is required to submit to the Owner FAC Document 639, Contractor E-Verify Affidavit, upon contract execution.

§ 3.7.8 Use of Coercion for Labor and Services

§ 3.7.8.1 Section 787.06(13) F.S., requires all nongovernmental entities executing, renewing or extending a contract with a governmental entity to provide an affidavit signed by an officer or representative of the nongovernmental entity under penalty of perjury that the nongovernmental entity does not use coercion for labor or services as defined in that statute. The School Board of Volusia County Florida is a governmental entity for purposes of this statute. Unless otherwise directed by the Owner, said affidavit shall be submitted as part of the Contractor's Pre-qualification via the School District's Purchasing Department.

§ 3.8 Allowances

§ 3.8.1 The Contractor shall include in the Contract Sum all allowances stated in the Contract Documents. Items covered by allowances shall be supplied for such amounts and by such persons or entities as the Owner may direct, but the Contractor shall not be required to employ persons or entities to whom the Contractor has reasonable objection.

§ 3.8.2 Unless otherwise provided in the Contract Documents,

- **.1** allowances shall cover the cost to the Contractor of materials and equipment delivered at the site and all required taxes, less applicable trade discounts;
- **.2** Contractor's costs for unloading and handling at the site, labor, installation costs, overhead, profit, and other expenses contemplated for stated allowance amounts shall be included in the Contract Sum but not in the allowances; and

.3 whenever costs are more than or less than allowances, the Contract Sum shall be adjusted accordingly by Change Order. The amount of the Change Order shall reflect (1) the difference between actual costs and the allowances under Section 3.8.2.1 and (2) changes in Contractor's costs under Section 3.8.2.2

§ 3.8.3 Materials and equipment under an allowance shall be selected by the Owner with reasonable promptness.

§ 3.9 Superintendent

§ 3.9.1 The Contractor shall employ a competent superintendent and necessary assistants who shall be in attendance at the Project site during all performance of the Work. The superintendent shall represent the Contractor, and communications given to the superintendent shall be as binding as if given to the Contractor. Important communications shall be confirmed in writing. Other communications shall be similarly confirmed on written request in each case. The superintendent shall be satisfactory to the Owner in all respects, and Owner shall have the right to require Contractor to dismiss from the Project any superintendent whose performance is not satisfactory to Owner, and to replace such superintendent with a superintendent satisfactory to Owner. The Contractor shall not replace the superintendent without the written consent of the Owner.

§ 3.9.2 The Contractor, as soon as practicable after award of the Contract, shall notify the Owner and Architect of the name and qualifications of a proposed superintendent. Within 14 days of receipt of the information, the Architect may notify the Contractor, stating whether the Owner or the Architect (1) has reasonable objection to the proposed superintendent or (2) requires additional time for review. Failure of the Architect to provide notice within the 14-day period shall constitute notice of no reasonable objection.

§ 3.9.3 The Contractor shall not employ a proposed superintendent to whom the Owner or Architect has made reasonable and timely objection. The Contractor shall not change the superintendent without the Owner's consent, which shall not unreasonably be withheld or delayed.

§ 3.9.4 If required by Owner, a list of all supervisory personnel, including the project manager and superintendent, that the Contractor intends to use on the Project and a chain-of-command organizational chart shall be submitted to the Owner for approval. The Contractor shall not engage supervisory personnel or utilize an organization and chain-of-command other than as approved by Owner in writing and shall not change such personnel or form of organization without the written approval of the Owner.

§ 3.10 Contractor's Construction and Submittal Schedules

§ 3.10.1 The Contractor, ~~promptly~~ within thirty (30) days after ~~being awarded~~ execution of the Contract, shall submit for the Owner's and Architect's ~~information~~ written approval a Contractor's construction schedule for the Work. The construction schedule shall contain detail appropriate for the Project, including (1) the date of commencement of the Work, interim schedule milestone dates, and the date of Substantial Completion; (2) an apportionment of the Work by construction activity; and (3) the time required for completion of each portion of the Work. The schedule shall provide for the orderly progression of the Work to completion and shall not exceed time limits current under the Contract Documents. The schedule shall be revised at appropriate intervals as required by the Owner and conditions of the Work and Project.

§ 3.10.2 Within thirty (30) days of Notice to Proceed (NTP), the Contractor shall prepare, for the Architect's approval, and thereafter keep current, a schedule of submittals which is coordinated with the Contractor's construction schedule and allows the Architect reasonable time to review submittals. No payment shall be due until this schedule is submitted and approved. ~~The Contractor, promptly after being awarded the Contract and thereafter as necessary to maintain a current submittal schedule, shall submit a submittal schedule for the Architect's approval. The Architect's approval shall not be unreasonably delayed or withheld. The submittal schedule shall (1) be coordinated with the Contractor's construction schedule, and (2) allow the Architect reasonable time to review submittals. If the Contractor fails to submit a submittal schedule, or fails to provide submittals in accordance with the approved submittal schedule, the Contractor shall not be entitled to any increase in Contract Sum or extension of Contract Time based on the time required for review of submittals.~~

§ 3.10.3 The Contractor shall perform the Work in ~~general accordance~~ conformity with the most recent schedules submitted to the Owner and Architect.

§ 3.10.4 If the Contractor submits a schedule indicating an intention to achieve completion of the Work prior to contractually required dates, including milestones, no liability of the Owner to the Contractor for any failure of the Contractor to complete early shall be created, whether or not the Owner approve such schedule.

§ 3.10.5 At the Owner's option, the Contractor shall provide a schedule utilizing critical path techniques to measure the progress of the Work. Such schedules shall be subject to the Owner's and Architect's written approval.

§ 3.10.6 Float or slack is not for the exclusive use or benefit of either the Owner or the Contractor. Extensions of time for performance will be granted only to the extent that the equitable time adjustments for the activity or activities affected exceed the total float along the activity chain involved at the time the change was ordered or the delay occurred. Notwithstanding the above, the Contractor shall only be entitled to an extension of the time for an excusable delay to the critical path of the Work that delays completion of the Project beyond the completion date stated in the Agreement.

§ 3.10.7 The Contractor acknowledges that the Owner may retain the services of a scheduling consultant at the Owner's expense. The Contractor shall cooperate with any such scheduling consultant at the Owner's direction, including, without limitation, with regard to the preparation of the Project schedule.

§ 3.11 As Built Drawings, Documents and Samples at the Site

§ 3.11.1 As Built drawings shall be updated monthly, which shall be a condition precedent to all Progress Payments, and shall provide as much accuracy as possible. As built drawings of the completed Project are precedent to final payment and shall be submitted in paper document and combined PDF, or other Architect and Owner acceptable digital format, on CD, DVD or other approved file transfer protocol (FTP), transmitted from the Contractor to the Architect for review and acceptance ~~as-built drawings to the Owner shall be a condition precedent to Final Payment. Completed as-built drawings shall be submitted as paper documents and on CD or DVD in combined PDF format~~.

§ 3.11.2 The Contractor shall make available, at the Project site, the Contract Documents, including Change Orders, ~~Construction Change Directives,~~ and other Modifications, in good order and marked currently to indicate field changes and selections made during construction, and the approved Shop Drawings, Product Data, Samples, and similar required submittals. These shall be in electronic form ~~or~~ and paper copy, available to the Architect and Owner, and delivered to the Architect for submittal to the Owner upon completion of the Work as a record of the Work as constructed.

§ 3.11.3 The Contractor shall maintain all approved permit drawings in a manner so as to make them accessible to governmental inspectors and other authorized agencies. All approved drawings shall be appropriately identified and delivered to the Owner within sixty (60) days of final completion of the Work.

§ 3.12 Shop Drawings, Product Data and Samples

§ 3.12.1 Shop Drawings are drawings, diagrams, schedules, and other data specially prepared for the Work by the Contractor or a Subcontractor, Sub-subcontractor, manufacturer, supplier, or distributor to illustrate some portion of the Work.

§ 3.12.2 Product Data are illustrations, standard schedules, performance charts, instructions, brochures, diagrams, and other information furnished by the Contractor to illustrate materials or equipment for some portion of the Work.

§ 3.12.3 Samples are physical examples that illustrate materials, equipment, or workmanship, and establish standards by which the Work will be judged.

§ 3.12.4 Shop Drawings, Product Data, Samples, and similar submittals are not Contract Documents. Their purpose is to demonstrate how the Contractor proposes to conform to the information given and the design concept expressed in the Contract Documents for those portions of the Work for which the Contract Documents require submittals. Review by the Architect is subject to the limitations of Section 4.2.7. Informational submittals upon which the Architect is not expected to take responsive action may be so identified in the Contract Documents. Submittals that are not required by the Contract Documents ~~may~~ shall be returned by the Architect without action.

§ 3.12.5 The Contractor shall review for compliance with the Contract Documents, approve, and submit to the Architect, Shop Drawings, Product Data, Samples, and similar submittals required by the Contract Documents, in accordance with

the submittal schedule approved by the Architect or, in the absence of an approved submittal schedule, with reasonable promptness and in such sequence as to cause no delay in the Work or in the activities of the Owner or of Separate Contractors. Submittals which are not marked as reviewed for compliance with the Contract Documents and approved by the Contractor shall be returned by the Architect without action.

§ 3.12.6 By submitting Shop Drawings, Product Data, Samples, and similar submittals, the Contractor represents to the Owner and Architect that the Contractor has (1) reviewed and approved them, (2) determined and verified materials, field measurements and field construction criteria related thereto, or will do so, and (3) checked and coordinated the information contained within such submittals with the requirements of the Work and of the Contract Documents.

§ 3.12.7 The Contractor shall perform no portion of the Work for which the Contract Documents require submittal and review of Shop Drawings, Product Data, Samples, or similar submittals, until the respective submittal has been approved by the Architect.

§ 3.12.8 The Work shall be in accordance with approved submittals except that the Contractor shall not be relieved of responsibility for deviations from the requirements of the Contract Documents by the Architect's approval of Shop Drawings, Product Data, Samples, or similar submittals, unless the Contractor has specifically notified the Architect of such deviation at the time of submittal and (1) the Architect has given written approval to the specific deviation as a minor change in the Work, or (2) a Change Order ~~or Construction Change Directive~~ has been issued authorizing the deviation. The Contractor shall not be relieved of responsibility for errors or omissions in Shop Drawings, Product Data, Samples, or similar submittals, by the Architect's approval thereof.

§ 3.12.9 The Contractor shall direct specific attention, in writing or on resubmitted Shop Drawings, Product Data, Samples, or similar submittals, to revisions other than those requested by the Architect on previous submittals. In the absence of such notice, the Architect's approval of a resubmission shall not apply to such revisions.

§ 3.12.10 The Contractor shall not be required to provide professional services that constitute the practice of architecture or engineering unless such services are specifically required by the Contract Documents for a portion of the Work or unless the Contractor needs to provide such services in order to carry out the Contractor's responsibilities for construction means, methods, techniques, sequences, and procedures. The Contractor shall not be required to provide professional services in violation of applicable law.

§ 3.12.10.1 If professional design services or certifications by a design professional related to systems, materials, or equipment are specifically required of the Contractor by the Contract Documents, the Owner and the Architect will specify all performance and design criteria that such services must satisfy. The Contractor shall be entitled to rely upon the adequacy and accuracy of the performance and design criteria provided in the Contract Documents. The Contractor shall cause such services or certifications to be provided by an appropriately licensed design professional in Florida, whose signature and seal shall appear on all drawings, calculations, specifications, certifications, Shop Drawings, and other submittals prepared by such professional. Shop Drawings, and other submittals related to the Work, designed or certified by such professional, if prepared by others, shall bear such professional's written approval when submitted to the Architect. The Owner and the Architect shall be entitled to rely upon the adequacy and accuracy of the services, certifications, and approvals performed or provided by such design professionals, provided the Owner and Architect have specified to the Contractor the performance and design criteria that such services must satisfy. Pursuant to this Section 3.12.10, the Architect will review and approve or take other appropriate action on submittals only for the limited purpose of checking for conformance with information given and the design concept expressed in the Contract Documents.

§ 3.12.10.2 If the Contract Documents require the Contractor's design professional to certify that the Work has been performed in accordance with the design criteria, the Contractor shall furnish such certifications to the Architect at the time and in the form specified by the Architect.

§ 3.12.11 The Contractor shall assemble for the Architect's approval two (2) complete binders of all operating and maintenance data from all manufacturers whose equipment is or will be installed in the Work.

DRAFT

§ 3.12.12 The Contractor shall submit to Owner one copy of all submissions made to the Architect pursuant to this Section 3.12.

§ 3.13 Use of Site

The Contractor shall confine operations at the site to areas permitted by applicable laws, statutes, ordinances, codes, rules and regulations, lawful orders of public authorities, and the Contract Documents and shall not unreasonably encumber the site with materials or equipment. The Contractor shall be responsible for the permitting, erection, maintaining and removal of all construction signage. The Contractor must submit all sign copy for approval prior to erecting or displaying. The Contractor and Owner shall meet promptly after execution of the Agreement to determine reasonable requirements for ingress and egress from the site. Reasonable locations for staging, parking and a single construction entrance shall be designated by the Contractor, subject to the Owner's approval.

§ 3.13.2 The Contractor shall assure free, convenient, unencumbered and direct access to properties neighboring the Project site for the owners of such properties and their respective tenants, agents, invitees and guests.

§ 3.14 Cutting and Patching

§ 3.14.1 The Contractor shall be responsible for cutting, fitting, or patching required to complete the Work or to make its parts fit together properly. All areas requiring cutting, fitting, or patching shall be restored to the condition existing prior to the cutting, fitting, or patching, unless otherwise required by the Contract Documents.

§ 3.14.2 The Contractor shall not damage or endanger a portion of the Work or fully or partially completed construction of the Owner or Separate Contractors by cutting, patching, or otherwise altering such construction, or by excavation. The Contractor shall not cut or otherwise alter construction by the Owner or a Separate Contractor except with written consent of the Owner and of the Separate Contractor. Consent shall not be unreasonably withheld. The Contractor shall not unreasonably withhold, from the Owner or a Separate Contractor, its consent to cutting or otherwise altering the Work.

§ 3.15 Cleaning Up

§ 3.15.1 The Contractor shall keep the premises and surrounding area free from accumulation of waste materials and rubbish caused by operations under the Contract. The Contractor shall prevent paint, mortar and concrete splatter on concrete sidewalks and stair tower floors. Any such splatter shall be immediately removed so no evidence of splatter remains. All construction debris shall be removed in a timely manner. Surrounding graded and grassed areas shall be regularly magnetically scanned to collect miscellaneous nails and other sharp objects; the Contractor shall remove such objects from the construction site. At completion of the Work, the Contractor shall remove waste materials, rubbish, the Contractor's tools, construction equipment, machinery, and surplus materials from and about the Project.

§ 3.15.2 If the Contractor fails to clean up as provided in the Contract Documents, the Owner may do so and the Owner shall be entitled to reimbursement from the Contractor.

§ 3.15.3 Immediately prior to the Architect's inspection for Substantial Completion, the Contractor shall completely clean the premises utilizing a licensed cleaning service. Concrete and ceramic surfaces shall be cleaned and washed. Woodwork and resilient shall be dusted and cleaned. Sash, fixtures and equipment shall be thoroughly cleaned. Stains, spots, dust, marks and smears shall be removed from all surfaces. Hardware and metal surfaces shall be cleaned and polished. Glass and plastic surfaces shall be thoroughly cleaned by professional window cleaners. All damaged, broken or scratched glass or plastic shall be replaced by the Contractor at the Contractor's expense.

§ 3.16 Access to Work

The Contractor shall provide the Owner and Architect at all times with access to the Work in preparation and progress wherever located.

§ 3.17 Royalties, Patents and Copyrights

The Contractor shall pay all royalties and license fees. The Contractor shall defend suits or claims for infringement of copyrights and patent rights and shall hold the Owner and Architect harmless from loss on account thereof, but shall not be responsible for defense or loss when a particular design, process, or product of a particular manufacturer or manufacturers is required by the Contract Documents, or where the copyright violations are contained in Drawings,

Specifications, or ~~other documents~~ Instruments of Service prepared by the Owner or Architect. However, if an infringement of a copyright or patent is discovered by, or made known to, the Contractor, the Contractor shall be responsible for the loss unless the information is promptly furnished to the Architect.

§ 3.18 Indemnification

§ 3.18.1 For one hundred dollars ($100.00), which is included in the contract price, the other good and valuable considerations, receipt of which is hereby acknowledged by the Contractor as consideration for the indemnity herein; said Contractor hereby agrees to defend and indemnify the Owner and the Architect/Engineer and their Agents and employees, from and against all claims, damages, losses and expenses, including but not limited to attorney's fees, arising out of or resulting from the performance of Work, provided that any such claim, damage, loss or expense is (1) attributed to bodily injury, sickness, disease or death, or to injury to, or destruction of tangible property, other than the work itself, including the loss of use resulting therefrom, and (2) caused in whole or in part by any act or omission of the Contractor, any Subcontractor, anyone directly or indirectly employed by any of them or anyone for whose acts any of them may be liable, regardless of whether or not it is caused in part by a party indemnified hereunder. Such obligation shall not be construed to negate, abridge or otherwise reduce any other right or obligation of indemnity which otherwise exist as to any party or person described in this Article. ~~To the fullest extent permitted by law, the Contractor shall indemnify and hold harmless the Owner, Architect, Architect's consultants, and agents and employees of any of them from and against claims, damages, losses, and expenses, including but not limited to attorneys' fees, arising out of or resulting from performance of the Work, provided that such claim, damage, loss, or expense is attributable to bodily injury, sickness, disease or death, or to injury to or destruction of tangible property (other than the Work itself), but only to the extent caused by the negligent acts or omissions of the Contractor, a Subcontractor, anyone directly or indirectly employed by them, or anyone for whose acts they may be liable, regardless of whether or not such claim, damage, loss, or expense is caused in part by a party indemnified hereunder. Such obligation shall not be construed to negate, abridge, or reduce other rights or obligations of indemnity that would otherwise exist as to a party or person described in this Section 3.18.~~

§ 3.18.2 In claims against any person or entity indemnified under this Section 3.18 by an employee of the Contractor, a Subcontractor, anyone directly or indirectly employed by them, or anyone for whose acts they may be liable, the indemnification obligation under Section 3.18.1 shall not be limited by a limitation on amount or type of damages, compensation, or benefits payable by or for the Contractor or a Subcontractor under workers' compensation acts, disability benefit acts, or other employee benefit acts.

§ 3.18.3 The Contractor acknowledges that for one hundred dollars ($100.00) of the Contract Price, as recited in Paragraph 3.18.1 above, and other good and valuable consideration from the Owner and Architect/Engineer, constitutes consideration for giving the Owner and the Architect/Engineer, respectively, the indemnifications required in this Agreement and the Contract Documents. The limit of dollar amount of Contractor's indemnity obligations required by the Agreement and the Contract Documents specifically for those claims caused in whole or in part by the Owner and Architect/Engineer shall be $1,000,000 or the Contract Sum of the Project, whichever is more. The parties agree that the indemnity provided herein bears a reasonable commercial relationship to the Agreement and is incorporated by this reference into the Project specifications and bid documents, if any.

§ 3.18.4 Notwithstanding the above and without monetary limitation, the Contractor hereby indemnifies and holds harmless the Owner, their officers and employees, from liabilities, damages, losses and costs, including, but not limited to, reasonable attorney's fees, to the extent caused by the negligence, recklessness, or intentional wrongful misconduct of the Contractor and persons employed or utilized by the Contractor in the performance of the construction Contract.

ARTICLE 4 ARCHITECT

§ 4.1 General

§ 4.1.1 The Architect is the person or entity retained by the Owner pursuant to Section 2.3.2 and identified as such in the Agreement.

§ 4.1.2 Duties, responsibilities, and limitations of authority of the Architect as set forth in the Contract Documents shall not be restricted, modified, or extended without written consent of the Owner, Contractor, and Architect. Consent shall not be unreasonably withheld.

§ 4.2 Administration of the Contract

§ 4.2.1 The Architect will provide administration of the Contract as described in the Contract Documents and will be an Owner's representative during construction until final payment is due and with the Owner's authorization, from time to time during the one-year period for correction of Work described in Section 12.2. ~~the date the Architect issues the final Certificate for Payment~~. The Architect will have authority to act on behalf of the Owner only to the extent provided in the Contract Documents, unless otherwise modified in writing in accordance with other provisions of the Contract.

§ 4.2.2 The Architect will visit the site at intervals appropriate to the stage of construction, or as otherwise agreed with the Owner, to become generally familiar with the progress and quality of the portion of the Work completed, and to determine in general if the Work observed is being performed in a manner indicating that the Work, when fully completed, will be in accordance with the Contract Documents. However, the Architect will not be required to make exhaustive or continuous on-site inspections to check the quality or quantity of the Work. The Architect will not have control over, charge of, or responsibility for the construction means, methods, techniques, sequences or procedures, or for the safety precautions and programs in connection with the Work, since these are solely the Contractor's rights and responsibilities under the Contract Documents.

§ 4.2.3 On the basis of the site visits, the Architect will keep the Owner ~~reasonably~~ informed about the progress and quality of the portion of the Work completed, and promptly report to the Owner (1) ~~known~~ deviations from the Contract Documents, (2) known deviations from the most recent construction schedule submitted by the Contractor, and (3) defects and deficiencies ~~observed~~ in the Work. The Architect will not be responsible for the Contractor's failure to perform the Work in accordance with the requirements of the Contract Documents. The Architect will not have control over or charge of, and will not be responsible for acts or omissions of, the Contractor, Subcontractors, or their agents or employees, or any other persons or entities performing portions of the Work.

§ 4.2.4 Communications

The Owner and Contractor shall include the Architect, if any, in all communications that relate to or affect the Architect's services or professional responsibilities. The Owner and Contractor shall promptly notify the Architect of the substance of any direct communications between the Owner and the Contractor otherwise relating to the Project. Communications by and with the Architect's consultants shall be through the Architect. Communications by and with Subcontractors and suppliers shall be through the Contractor. Communications by and with Separate Contractors shall be through the Owner. The Contract Documents may specify other communication protocols.

§ 4.2.5 Based on the Architect's evaluations of the Contractor's Applications for Payment, the Architect will review and certify the amounts due the Contractor and will issue Certificates for Payment in such amounts.

§ 4.2.6 The Architect has authority to reject Work that does not conform to the Contract Documents. Whenever the Architect considers it necessary or advisable, the Architect will have authority to require inspection or testing of the Work in accordance with Sections 13.4.2 and 13.4.3, whether or not the Work is fabricated, installed or completed. However, neither this authority of the Architect nor a decision made in good faith either to exercise or not to exercise such authority shall give rise to a duty or responsibility of the Architect to the Contractor, Subcontractors, suppliers, their agents or employees, or other persons or entities performing portions of the Work.

§ 4.2.7 The Architect will review and approve, or take other appropriate action upon, the Contractor's submittals such as Shop Drawings, Product Data, and Samples, but only for the limited purpose of checking for conformance with information given and the design concept expressed in the Contract Documents. The Architect's action will be taken in accordance with the submittal schedule approved by the Architect or, in the absence of an approved submittal schedule, with reasonable promptness to cause no delay in the Work or in the activities of the Owner, Contractor or separate contractors, while allowing sufficient time in the Architect's professional judgment to permit adequate review. Review of such submittals is not conducted for the purpose of determining the accuracy and completeness of other details such as dimensions and quantities, or for substantiating instructions for installation or performance of equipment or systems, all of which remain the responsibility of the Contractor as required by the Contract Documents. The Architect's review of the Contractor's submittals shall not relieve the Contractor of the obligations under Sections 3.3, 3.5, and 3.12. The Architect's review shall not constitute approval of safety precautions or of any construction means, methods, techniques, sequences, or procedures. The Architect's approval of a specific item shall not indicate approval of an assembly of which the item is a component.

§ 4.2.8 The Architect will prepare Change Orders ~~and Construction Change Directives~~, or other appropriate written directives, and may order minor changes in the Work as provided in Section 7.4. The Architect will investigate and make determinations and recommendations regarding concealed and unknown conditions as provided in Section 3.7.4.

§ 4.2.9 The Architect will conduct inspections to determine the date or dates of Substantial Completion and the date of final completion; issue Certificates of Substantial Completion pursuant to Section 9.8; receive and forward to the Owner, for the Owner's review and records, written warranties and related documents required by the Contract and assembled by the Contractor pursuant to Section 9.10; and issue a final Certificate for Payment pursuant to Section 9.10.

§ 4.2.10 If the Owner and Architect agree, the Architect will provide one or more Project representatives to assist in carrying out the Architect's responsibilities at the site. The Owner shall notify the Contractor of any change in the duties, responsibilities and limitations of authority of the Project representatives.

§ 4.2.11 The Architect will interpret and decide matters concerning performance under, and requirements of, the Contract Documents on written request of either the Owner or Contractor. The Architect's response to such requests will be made in writing no later than fifteen (15) days after receipt of the request ~~within any time limits agreed upon or otherwise with reasonable promptness~~.

§ 4.2.12 Interpretations and decisions of the Architect will be consistent with the intent of, and reasonably inferable from, the Contract Documents and will be in writing or in the form of drawings. When making such interpretations and decisions, the Architect will endeavor to secure faithful performance by both Owner and Contractor, will not show partiality to either, and will not be liable for results of interpretations or decisions rendered in good faith.

§ 4.2.13 The Architect's decisions on matters relating to aesthetic effect will be final if consistent with the intent expressed in the Contract Documents.

§ 4.2.14 The Architect will review and respond to requests for information about the Contract Documents. The Architect's response to such requests will be made in writing within any time limits agreed upon or otherwise with reasonable promptness. If appropriate, the Architect will prepare and issue supplemental Drawings and Specifications in response to the requests for information.

§ 4.2.15 Upon request of the Owner, claims, disputes and other matters in question relating to the execution or progress of the Work or the interpretation of the Contract Documents may be referred to the Architect for initial decision, which the Architect shall render in writing within a reasonable time, not to exceed fifteen (15) days after the date on which such request is made.

ARTICLE 5 SUBCONTRACTORS

§ 5.1 Definitions

§ 5.1.1 A Subcontractor is a person or entity who has a direct contract with the Contractor to perform a portion of the Work at the site. The term "Subcontractor" is referred to throughout the Contract Documents as if singular in number and means a Subcontractor or an authorized representative of the Subcontractor. The term "Subcontractor" does not include a Separate Contractor or the subcontractors of a Separate Contractor.

§ 5.1.2 A Sub-subcontractor is a person or entity who has a direct or indirect contract with a Subcontractor to perform a portion of the Work at the site. The term "Sub-subcontractor" is referred to throughout the Contract Documents as if singular in number and means a Sub-subcontractor or an authorized representative of the Sub-subcontractor.

§ 5.2 Award of Subcontracts and Other Contracts for Portions of the Work

§ 5.2.1 Subcontractors must be properly licensed in accordance with Florida law. ~~Unless otherwise stated in the Contract Documents, the Contractor, as soon as practicable after award of the Contract, shall notify the Owner and Architect of the persons or entities proposed for each principal portion of the Work, including those who are to furnish materials or equipment fabricated to a special design. Within 14 days of receipt of the information, the Architect may notify the Contractor whether the Owner or the Architect (1) has reasonable objection to any such proposed person or entity or (2) requires additional time for review. Failure of the Architect to provide notice within the 14-day period shall constitute notice of no reasonable objection.~~

§ 5.2.2 The Contractor shall not contract with a proposed person or entity to whom the Owner or Architect has made reasonable ~~and timely~~ objection. The Contractor shall not be required to contract with anyone to whom the Contractor has made reasonable objection.

§ 5.2.3 If the Owner or Architect has reasonable objection to a person or entity proposed by the Contractor, the Contractor shall propose another to whom the Owner or Architect has no reasonable objection. If the proposed but rejected Subcontractor was reasonably capable of performing the Work, the Contract Sum and Contract Time shall be increased or decreased by the difference, if any, occasioned by such change, and an appropriate Change Order shall be issued before commencement of the substitute Subcontractor's Work. However, no increase in the Contract Sum or Contract Time shall be allowed for such change unless the Contractor has acted promptly and responsively in submitting names as required.

§ 5.2.4 The Contractor shall not substitute a Subcontractor, person, or entity for one previously selected ~~if~~ without due cause ~~unless the Owner or Architect makes reasonable objection to such substitution~~. The Owner may require the Contractor to change any Subcontractor, person, or entity in situations where the Owner determines that their Work is inadequate and adversely affects the Project.

§ 5.2.5 The Contractor shall disclose the existence and extent of any financial interest, whether direct or indirect, it has in any subcontractors or material suppliers which it proposes for the Project.

§ 5.3 Subcontractual Relations

By appropriate written agreement, the Contractor shall require each Subcontractor, to the extent of the Work to be performed by the Subcontractor, to be bound to the Contractor by terms of the Contract Documents, and to assume toward the Contractor all the obligations and responsibilities, including the responsibility for safety of the Subcontractor's Work that the Contractor, by these Contract Documents, assumes toward the Owner and Architect. Each subcontract agreement shall preserve and protect the rights of the Owner and Architect under the Contract Documents with respect to the Work to be performed by the Subcontractor so that subcontracting thereof will not prejudice such rights, and shall allow to the Subcontractor, unless specifically provided otherwise in the subcontract agreement, the benefit of all rights, remedies, and redress against the Contractor that the Contractor, by the Contract Documents, has against the Owner. Where appropriate, the Contractor shall require each Subcontractor to enter into similar agreements with Sub-subcontractors. The Contractor shall make available to each proposed Subcontractor, prior to the execution of the subcontract agreement, copies of the Contract Documents to which the Subcontractor will be bound, and, upon written request of the Subcontractor, identify to the Subcontractor terms and conditions of the proposed subcontract agreement that may be at variance with the Contract Documents. Subcontractors will similarly make copies of applicable portions of such documents available to their respective proposed Sub-subcontractors.

§ 5.4 Contingent Assignment of Subcontracts

§ 5.4.1 Each subcontract agreement for a portion of the Work is assigned by the Contractor to the Owner, provided that

- **.1** assignment is effective only after termination of the Contract by the Owner for cause pursuant to Section 14.2 or Termination for Convenience by the Owner pursuant to Paragraph 14.4 and only for those subcontract agreements that the Owner accepts by notifying the Subcontractor and Contractor; and
- **.2** assignment is subject to the prior rights of the surety, if any, obligated under bond relating to the Contract.

§ 5.4.1.3 When the Owner accepts the assignment of a subcontract agreement, the Owner assumes the Contractor's rights and obligations under the subcontract subsequent to the date of acceptance of the assignment; however, in no event shall the Owner's acceptance of such an assignment release the Contractor from its obligations under the subcontract agreement or this Agreement. Subcontracts between the Contractor and its Subcontractors shall provide for the assignment of those subcontracts from the Contractor to the Owner at election of the Owner upon termination of the Contractor.

§ 5.4.2 Upon such assignment, if the Work has been suspended for more than 30 days, the Subcontractor's compensation shall be ~~equitably~~ adjusted for increases in direct cost resulting from the suspension beyond the thirty (30) days.

~~**§ 5.4.3** Upon assignment to the Owner under this Section 5.4, the Owner may further assign the subcontract to a successor contractor or other entity. If the Owner assigns the subcontract to a successor contractor or other entity, the~~

~~Owner shall nevertheless remain legally responsible for all of the successor contractor's obligations under the subcontract.~~

ARTICLE 6 CONSTRUCTION BY OWNER OR BY SEPARATE CONTRACTORS

§ 6.1 Owner's Right to Perform Construction and to Award Separate Contracts

§ 6.1.1 The term "Separate Contractor(s)" shall mean other contractors retained by the Owner under separate agreements. The Owner reserves the right to perform construction or operations related to the Project with the Owner's own forces, and with Separate Contractors retained under Conditions of the Contract substantially similar to those of this Contract, including those provisions of the Conditions of the Contract related to insurance and waiver of subrogation.

§ 6.1.2 When separate contracts are awarded for different portions of the Project or other construction or operations on the site, the term "Contractor" in the Contract Documents in each case shall mean the Contractor who executes each separate Owner-Contractor Agreement.

§ 6.1.3 The Owner, at its option, shall either (1) provide for coordination of the activities of the Owner's own forces and of each Separate Contractor with the Work of the Contractor, who shall cooperate with them or (2) shall require that the Contractor provide for such coordination, which the Contractor shall perform when directed by Owner to do so. The Contractor shall participate with any Separate Contractors and the Owner in reviewing their construction schedules. The Contractor shall make any revisions to its construction schedule deemed necessary after a joint review and mutual agreement. The construction schedules shall then constitute the schedules to be used by the Contractor, Separate Contractors, and the Owner until subsequently revised.

§ 6.1.4 Unless otherwise provided in the Contract Documents, when the Owner performs construction or operations related to the Project with the Owner's own forces or with Separate Contractors, the Owner or its Separate Contractors shall have the same obligations and rights that the Contractor has under the Conditions of the Contract, including, without excluding others, those stated in Article 3, this Article 6, and Articles 10, 11, and 12.

§ 6.2 Mutual Responsibility

§ 6.2.1 The Contractor shall afford the Owner and Separate Contractors reasonable opportunity for introduction and storage of their materials and equipment and performance of their activities, and shall connect and coordinate the Contractor's construction and operations with theirs as required by the Contract Documents.

§ 6.2.2 If part of the Contractor's Work depends for proper execution or results upon construction or operations by the Owner or a Separate Contractor, the Contractor shall, prior to proceeding with that portion of the Work, promptly notify the Architect of apparent discrepancies or defects in the construction or operations by the Owner or Separate Contractor that would render it unsuitable for proper execution and results of the Contractor's Work. Failure of the Contractor to notify the Architect of apparent discrepancies or defects prior to proceeding with the Work shall constitute an acknowledgment that the Owner's or Separate Contractor's completed or partially completed construction is fit and proper to receive the Contractor's Work. The Contractor shall not be responsible for discrepancies or defects in the construction or operations by the Owner or Separate Contractor that are not apparent.

§ 6.2.3 The Contractor shall reimburse the Owner for costs the Owner incurs that are payable to a Separate Contractor because of the Contractor's delays, improperly timed activities or defective construction. The Owner shall be responsible to the Contractor for costs the Contractor incurs because of a Separate Contractor's delays, improperly timed activities, damage to the Work or defective construction.

§ 6.2.4 The Contractor shall promptly remedy damage that the Contractor wrongfully causes to completed or partially completed construction or to property of the Owner or Separate Contractor as provided in Section 10.2.5.

§ 6.2.5 The Owner and each Separate Contractor shall have the same responsibilities for cutting and patching as are described for the Contractor in Section 3.14.

§ 6.2.6 If any Subcontractor initiates legal or any other proceedings against the Owner on account of any damage alleged to have been caused by the Contractor, the Owner shall notify the Contractor, who shall defend such proceedings at its own expense, and if any settlement, judgment or award against the Owner arises therefrom, the Contractor shall pay or

satisfy it and shall indemnify and reimburse the Owner for all monies paid or to be paid including attorneys' fees and court or other costs which the Owner has incurred.

§ 6.3 Owner's Right to Clean Up

If a dispute arises among the Contractor, Separate Contractors, and the Owner as to the responsibility under their respective contracts for maintaining the premises and surrounding area free from waste materials and rubbish, the Owner may clean up and the Architect will allocate the cost among those responsible.

ARTICLE 7 CHANGES IN THE WORK

§ 7.1 General

§ 7.1.1 Changes in the Work may be accomplished after execution of the Contract, and without invalidating the Contract, by Change Order, ~~Construction Change Directive~~ or order for a minor change in the Work, subject to the limitations stated in this Article 7 and elsewhere in the Contract Documents. Agreement on and execution of any Change Order shall constitute a final settlement and a full accord and satisfaction of all matters relating to the change and to the impact of the change on unchanged Work, including all direct and indirect costs of whatever nature, and all adjustments to the Contract Schedule.

§ 7.1.2 A Change Order shall be based upon agreement among the Owner, Contractor, and Architect. ~~A Construction Change Directive requires agreement by the Owner and Architect and may or may not be agreed to by the Contractor.~~ An order for a minor change in the Work may be issued by the Architect alone.

§ 7.1.3 Changes in the Work shall be performed under applicable provisions of the Contract Documents. The Contractor shall proceed promptly with changes in the Work, unless otherwise provided in the Change Order, ~~Construction Change Directive,~~ or order for a minor change in the Work. A change in Contract Sum or Contract Time shall be accomplished only by Change Order. No course of conduct, verbal discussions or dealings between the parties shall be the basis of claims by the Contractor to any change in the Contract Sum or Contract Time.

§ 7.1.4 If the Architect determines that a change or changes in the Work might be or are necessary or desirable, the Architect shall issue a proposal request to the Contractor in which the Architect describes the proposed change or changes in the Work. The Contractor shall respond to each such proposal request in writing within a reasonable time, but in no event more the fourteen (14) days after receipt, such response to contain (1) the amount of any increase or decrease in the Contract Price or Guaranteed Maximum Price for effecting the proposed change or changes in the Work (2) a written comprehensive and itemized cost breakdown of the estimated reasonable additional or reduced costs to the Contractor of all labor, materials and equipment required by such proposal requests and (3) the length of any extension or reduction of the Contract Time for effecting the proposed change or changes in the Work.

§ 7.1.5 If any Change Order, signed by the Owner and the Contractor, results in or contains an adjustment to the Contract Price, the amount of such adjustment shall be conclusively deemed and held to include the Contractor's applicable profit, Fee and costs of and for all applicable taxes, bond premiums, insurance premiums, supervision, overhead, profit, labor, labor impact and materials related to the Change Order and the additional Work required and/or contemplated thereby, and the Contractor shall be conclusively deemed and held to have waived any claim for any additional sum or time extension for delays, disruption, acceleration, loss of productivity, ripple effect, inefficiency or any other matter arising out of or in any way related to such Change Order and the additional Work contemplated thereby.

§ 7.2 Change Orders

§ 7.2.1 A Change Order is a written instrument prepared by the Architect and signed by the Owner, Contractor, and Architect stating their agreement upon all of the following:

- **.1** The change in the Work, if any;
- **.2** The amount of the adjustment, if any, in the Contract Sum; and
- **.3** The extent of the adjustment, if any, in the Contract Time.

§ 7.2.2 If the Change Order provides for an adjustment to the Contract Sum, the adjustment shall be based on one of the following methods:

- **.1** Mutual acceptance of a lump sum properly itemized and supported by sufficient substantiating data to permit evaluation;

.2 Unit prices stated in the Contract Documents or subsequently agreed upon;
.3 Cost to be determined in a manner agreed upon by the parties and a mutually acceptable fixed or percentage fee; or
.4 As provided in Section 7.2.3.

§ 7.2.3 If the Contractor does not respond promptly or disagrees with the method for adjustment in the Contract Sum, the Architect shall determine the adjustment on the basis of reasonable expenditures and savings of those performing the Work attributable to the change, including, in case of an increase in the Contract Sum, an amount for overhead and profit as set forth in the Agreement, or if no such amount is set forth in the Agreement, a reasonable amount. In such case, and also under Section 7.2.2, the Contractor shall keep and present, in such form as the Architect may prescribe, an itemized accounting together with appropriate supporting data. Unless otherwise provided in the Contract Documents, costs for the purposes of this Section 7.2.3 shall be limited to the following:

.1 Costs of labor, including applicable payroll taxes, fringe benefits required by agreement or custom, workers' compensation insurance, and other employee costs approved by the Architect;
.2 Costs of materials, supplies, and equipment, including cost of transportation, whether incorporated or consumed;
.3 Rental costs of machinery and equipment, exclusive of hand tools, whether rented from the Contractor or others;
.4 Costs of premiums for all bonds and insurance, permit fees, and sales, use, or similar taxes, directly related to the change; and
.5 Costs of supervision and field office personnel directly attributable to the change.

§ 7.2.4 If the Contractor disagrees with the adjustment in the Contract Time, the Contractor may make a Claim in accordance with applicable provisions of Article 15.

§ 7.2.5 The amount of credit to be allowed by the Contractor to the Owner for a deletion or change that results in a net decrease in the Contract Sum shall be actual net cost as confirmed by the Architect. When both additions and credits covering related Work or substitutions are involved in a change, the allowance for overhead and profit shall be figured on the basis of net increase, if any, with respect to that change.

§ 7.2.6 In subparagraph 7.2.3 above, the reasonable allowance for overhead and profit, including the Contractor's Fee, if any, included in the total cost to the Owner, shall be based on the following schedule, which shall be full compensation for all overhead and profit of whatever nature associated with the Change:

.1 For the Contractor, for any Work performed by the Contractor's own forces, ten percent (10%) of the cost.
.2 For the Contractor, for Work performed by its Subcontractor, five percent (5%) of the amount due the Subcontractor.
.3 For each Subcontractor or Sub-subcontractor, for any Work performed by that Subcontractor's or Sub-subcontractor's own forces, ten percent (10%) of the cost.
.4 For each Subcontractor, for Work performed by its Sub-subcontractor, five percent (5%) of the amount due the Sub-subcontractor.
.5 Costs to which overhead and profit are to be applied shall be determined in accordance with subparagraphs 7.2.3.1 through 7.2.3.5.
.6 In order to facilitate checking of quotations for extras or credits, all proposals, except those so minor that their propriety can be seen by inspection, shall be accompanied by a complete itemization of all increased and decreased costs to both Contractor and its Subcontractors as follows:
    .1 Material quantities and unit costs.
    .2 Labor costs identified with the specific item of material to be placed or operation to be performed.
    .3 Construction equipment
    .4 Workmen's Compensation and Public Liability Insurance.
    .5 Overhead and Profit.
    .6 Employment taxes under FICA and FUTA.
    .7 In no case will a change over $500.00 be approved without such itemization.

§ 7.3 ~~Construction Change Directives~~

~~§ 7.3.1~~ ~~A Construction Change Directive is a written order prepared by the Architect and signed by the Owner and Architect, directing a change in the Work prior to agreement on adjustment, if any, in the Contract Sum or Contract Time, or both. The Owner may by Construction Change Directive, without invalidating the Contract, order changes in the Work within the general scope of the Contract consisting of additions, deletions, or other revisions, the Contract Sum and Contract Time being adjusted accordingly.~~

~~§ 7.3.2~~ ~~A Construction Change Directive shall be used in the absence of total agreement on the terms of a Change Order.~~

~~§ 7.3.3~~ ~~If the Construction Change Directive provides for an adjustment to the Contract Sum, the adjustment shall be based on one of the following methods:~~

- ~~**.1** Mutual acceptance of a lump sum properly itemized and supported by sufficient substantiating data to permit evaluation;~~
- ~~**.2** Unit prices stated in the Contract Documents or subsequently agreed upon;~~
- ~~**.3** Cost to be determined in a manner agreed upon by the parties and a mutually acceptable fixed or percentage fee; or~~
- ~~**.4** As provided in Section 7.3.4.~~

~~§ 7.3.4~~ ~~If the Contractor does not respond promptly or disagrees with the method for adjustment in the Contract Sum, the Architect shall determine the adjustment on the basis of reasonable expenditures and savings of those performing the Work attributable to the change, including, in case of an increase in the Contract Sum, an amount for overhead and profit as set forth in the Agreement, or if no such amount is set forth in the Agreement, a reasonable amount. In such case, and also under Section 7.3.3.3, the Contractor shall keep and present, in such form as the Architect may prescribe, an itemized accounting together with appropriate supporting data. Unless otherwise provided in the Contract Documents, costs for the purposes of this Section 7.3.4 shall be limited to the following:~~

- ~~**.1** Costs of labor, including applicable payroll taxes, fringe benefits required by agreement or custom, workers' compensation insurance, and other employee costs approved by the Architect;~~
- ~~**.2** Costs of materials, supplies, and equipment, including cost of transportation, whether incorporated or consumed;~~
- ~~**.3** Rental costs of machinery and equipment, exclusive of hand tools, whether rented from the Contractor or others;~~
- ~~**.4** Costs of premiums for all bonds and insurance, permit fees, and sales, use, or similar taxes, directly related to the change; and~~
- ~~**.5** Costs of supervision and field office personnel directly attributable to the change.~~

~~§ 7.3.5~~ ~~If the Contractor disagrees with the adjustment in the Contract Time, the Contractor may make a Claim in accordance with applicable provisions of Article 15.~~

~~§ 7.3.6~~ ~~Upon receipt of a Construction Change Directive, the Contractor shall promptly proceed with the change in the Work involved and advise the Architect of the Contractor's agreement or disagreement with the method, if any, provided in the Construction Change Directive for determining the proposed adjustment in the Contract Sum or Contract Time.~~

~~§ 7.3.7~~ ~~A Construction Change Directive signed by the Contractor indicates the Contractor's agreement therewith, including adjustment in Contract Sum and Contract Time or the method for determining them. Such agreement shall be effective immediately and shall be recorded as a Change Order.~~

~~§ 7.3.8~~ ~~The amount of credit to be allowed by the Contractor to the Owner for a deletion or change that results in a net decrease in the Contract Sum shall be actual net cost as confirmed by the Architect. When both additions and credits covering related Work or substitutions are involved in a change, the allowance for overhead and profit shall be figured on the basis of net increase, if any, with respect to that change.~~

~~§ 7.3.9~~ ~~Pending final determination of the total cost of a Construction Change Directive to the Owner, the Contractor may request payment for Work completed under the Construction Change Directive in Applications for Payment. The Architect will make an interim determination for purposes of monthly certification for payment for those costs and certify for payment the amount that the Architect determines, in the Architect's professional judgment, to be reasonably~~

DRAFT

~~justified. The Architect's interim determination of cost shall adjust the Contract Sum on the same basis as a Change Order, subject to the right of either party to disagree and assert a Claim in accordance with Article 15.~~

~~**§ 7.3.10** When the Owner and Contractor agree with a determination made by the Architect concerning the adjustments in the Contract Sum and Contract Time, or otherwise reach agreement upon the adjustments, such agreement shall be effective immediately and the Architect will prepare a Change Order. Change Orders may be issued for all or any part of a Construction Change Directive.~~

§ 7.4 Minor Changes in the Work

The Architect may order minor changes in the Work that are consistent with the intent of the Contract Documents and do not involve an adjustment in the Contract Sum or an extension of the Contract Time. The Architect's order for minor changes shall be in writing and approved by the Owner. ~~If the Contractor believes that the proposed minor change in the Work will affect the Contract Sum or Contract Time, the Contractor shall notify the Architect and shall not proceed to implement the change in the Work. If the Contractor performs the Work set forth in the Architect's order for a minor change without prior notice to the Architect that such change will affect the Contract Sum or Contract Time, the Contractor waives any adjustment to the Contract Sum or extension of the Contract Time.~~ The Contractor shall not receive any additional compensation, nor shall there be any adjustment to the Contract Time as a result thereof.

ARTICLE 8 TIME

§ 8.1 Definitions

§ 8.1.1 Unless otherwise provided, Contract Time is the period of time, including authorized adjustments, allotted in the Contract Documents for Substantial Completion of the Work.

§ 8.1.2 The date of commencement of the Work is the date established in the Agreement.

§ 8.1.3 The date of Substantial Completion is the date certified by the Architect in accordance with Section 9.8.

§ 8.1.4 The term "day" as used in the Contract Documents shall mean calendar day including weekends and legal holidays unless otherwise specifically defined.

§ 8.2 Progress and Completion

§ 8.2.1 Time limits stated in the Contract Documents are of the essence of the Contract. By executing the Agreement, the Contractor confirms that the Contract Time is a reasonable period for performing the Work.

§ 8.2.2 The Contractor shall not knowingly, except by agreement or instruction of the Owner in writing, commence the Work prior to the effective date of insurance required to be furnished by the Contractor ~~and Owner~~.

§ 8.2.3 The Contractor shall proceed expeditiously with adequate forces and shall achieve Substantial Completion within the Contract Time. To ensure that Substantial Completion of the Work is achieved within the Contract Time, the Contractor will, before commencing the Work, submit to Owner a progress schedule showing milestone dates for completion of major portions of the Work which, if the milestone dates are met, will achieve Substantial Completion of the Work within the Contract Time. In the event any milestone date is missed, the Contractor will immediately accelerate the progress of the Work by taking those steps necessary to ensure that the next milestone date is achieved as originally planned, including without limitation, working seven days a week and overtime and employing additional employees or subcontractors. Unless the failure to meet a milestone date is caused by act of the Owner, the additional cost resulting from such acceleration shall not increase the Contract Sum.

§ 8.3 Delays and Extensions of Time

§ 8.3.1 Except as provided in Subparagraph 8.3.2, no adjustment in Contract Sum shall be made for any delays hereunder and no damages shall be paid by the Owner for such delay. The Contractor shall delay or suspend the progress of the Work, or of any part thereof, whenever he shall be so required by written order of the Owner, and for such periods of time as the Owner may order, providing that in the event of such delay or delays or of such suspension or suspensions of the progress of the Work, or any part thereof, the Contract Time for the Work so suspended or of Work delayed by such suspension shall be extended for a period equivalent to the time lost by reason of the suspension(s), except when the Contractor is notified to suspend Work on account of faulty construction or construction methods that endanger the

Work. Such order of the Owner shall not otherwise modify or invalidate in any way any of the provisions of this Contract, and the Contractor shall not be entitled to any damages or compensation from the Owner on account of such delay or delays, suspension or suspensions, except as provided below. ~~If the Contractor is delayed at any time in the commencement or progress of the Work by (1) an act or neglect of the Owner or Architect, of an employee of either, or of a Separate Contractor; (2) by changes ordered in the Work; (3) by labor disputes, fire, unusual delay in deliveries, unavoidable casualties, adverse weather conditions documented in accordance with Section 15.1.6.2, or other causes beyond the Contractor's control; (4) by delay authorized by the Owner pending mediation and binding dispute resolution; or (5) by other causes that the Contractor asserts, and the Architect determines, justify delay, then the Contract Time shall be extended for such reasonable time as the Architect may determine.~~

§ 8.3.2 When alterations or additions on the critical path are made to the Work, and such alterations or additions increase the overall completion date, the Contractor shall submit to the Architect in writing any resultant claim for an extension in the Contract Time, and shall deliver such claims to the Architect within ten (10) days after the occurrence of the event giving rise to the claim. The recommendation of the Architect regarding extension of Contract Time shall be submitted to the Owner for approval. ~~Claims relating to time shall be made in accordance with applicable provisions of Article 15.~~

§ 8.3.2.1 Any approved changes in Contract Time shall be incorporated in a Change Order. No changes in Contract Time shall be made for any alterations or additions to the Work which are not demonstrated to affect the overall completion of the job. The provision of this Article 8 shall in no way alter, change or invalidate the provisions of the Contract Documents with respect to liquidated damages. The Contractor shall not be entitled to any delay damages or other compensation solely on account of an increase in Contract Time except in accordance with Section 8.3.4 below.

§ 8.3.3 Notwithstanding Subparagraph 8.3.1, if the Work is delayed due to the fault or neglect of the Owner, and such delays have a cumulative total impact of more than fifteen (15) calendar days to the critical path, the Contractor may make claim pursuant to Article 4 for its actual and direct costs arising out of the delay. The Contract Sum shall be adjusted for such actual and direct costs, but in no event shall indirect, impact, inefficiency, offsite or home office overhead, loss of productivity, consequential damages, legal or consulting costs be paid on account of such delays. The Contractor hereby expressly waives its right to such delay or time-related costs or damages.

§ 8.3.4 In the event the Contractor accelerates its Work, without written authorization of the Owner, the Owner shall pay no overtime inefficiencies to the Contractor for such acceleration and the Contractor hereby expressly waives its right to recover such overtime inefficiencies. ~~This Section 8.3 does not preclude recovery of damages for delay by either party under other provisions of the Contract Documents.~~

§ 8.3.5 The Contractor's written claims for extension of Contract Time shall be accompanied by detailed dates, correspondence, notices and any other data which provides proof of the events which are the basis for the claim, including a network analysis justifying the time extension. Said network analysis shall specifically detail the extension of the critical path of the Project caused by the events, which underlie the time extension request. Any claim not including said data and network analysis shall be deemed waived.

§ 8.3.6 Should the Contractor be obstructed or delayed in the commencement, prosecution or completion of any part of the Work by any act or delay of the Owner; or by any acts or neglect by any separate contractor employed by the Owner; material or appurtenances for the Work; or by riot, insurrection, war (excluding wars involving the United States in the Mid-Eastern portion of the World), pestilence, fire, earthquakes, cyclones, floods, epidemics; or through any act, default or delay of other parties under contract with the Owner; then the Contract Time for the Work so delayed shall be extended for a period equivalent to the time lost. Such allowance shall not be made unless a claim for extension of time is made by the Contractor to the Owner and Architect in writing within ten (10) days from the time when the alleged cause for delay occurs.

§ 8.3.7 It is further expressly agreed that the Contractor shall not be entitled to any damages or compensation from the Owner on account of any delays resulting from any of the causes specified above except those circumstances where delays are caused by the Owner or by parties under contract with the Owner, in which circumstances the Contractor shall be entitled to compensation (1) for Contractor's actual costs of increased direct jobsite wages resulting from the extended completion date caused by Owner; and (2) for extra premiums on bonds actually paid by the Contractor on account of the

DRAFT

additional time required to complete all Work hereunder. Any change in the Contract Time resulting from any claims for delays shall be incorporated in a signed Change Order upon approval of the change by the Owner.

§ 8.3.8 Except for weather events listed in Section 8.3.6 above, Contractor expressly assumes the risk for all weather delays of every kind and nature.

ARTICLE 9 PAYMENTS AND COMPLETION

§ 9.1 Contract Sum

§ 9.1.1 The Contract Sum is stated in the Agreement and, including authorized adjustments, is the total amount payable by the Owner to the Contractor for performance of the Work under the Contract Documents.

§ 9.1.2 ~~If unit prices are stated in the Contract Documents or subsequently agreed upon, and if quantities originally contemplated are materially changed so that application of such unit prices to the actual quantities causes substantial inequity to the Owner or Contractor, the applicable unit prices shall be equitably adjusted.~~

§ 9.2 Schedule of Values

Where the Contract is based on a stipulated sum or Guaranteed Maximum Price, the Contractor shall submit a schedule of values to the Architect before the first Application for Payment, allocating the entire Contract Sum to the various portions of the Work. The schedule of values shall be prepared in the form, and supported by the data to substantiate its accuracy, required by the Architect. The schedule of values shall be prepared in such manner that each major item of the Work and each subcontracted item of the Work is shown as a separate line item on AIA Document G703, Application and Certificate for Payment, Continuation Sheet, or other form acceptable to the Owner. This schedule, unless objected to by the Architect or Owner, shall be used as a basis for reviewing the Contractor's Applications for Payment. Any changes to the schedule of values shall be submitted to the Architect and supported by such data to substantiate its accuracy as the Architect may require, and unless objected to by the Architect, shall be used as a basis for reviewing the Contractor's subsequent Applications for Payment. The Contractor shall not make changes in the Schedule of Values without prior approval of the Architect and Owner. The form for the Application for Payment shall be AIA Document G702, supported by AIA Document G703, or other Owner approved form. The Schedule of Values shall be prepared in such a manner that each major item of Work and each subcontracted item of Work is shown as a single item on AIA Document G703 Application and Certificate for Payment Continuation Sheet, or other Owner approved form.

§ 9.3 Applications for Payment

§ 9.3.1 At least ten days before the date established for each progress payment, the Contractor shall submit to the Architect an itemized Application for Payment prepared in accordance with the schedule of values, if required under Section 9.2, for completed portions of the Work. The application shall be notarized, if required, and supported by all data substantiating the Contractor's right to payment that the Owner or Architect require, such as copies of requisitions, and releases and waivers of liens from Subcontractors and suppliers, and shall reflect retainage if provided for in the Contract Documents.

§ 9.3.1.1 ~~As provided in Section 7.3.9, such applications may include requests for payment on account of changes in the Work that have been properly authorized by Construction Change Directives, or by interim determinations of the Architect, but not yet included in Change Orders.~~

§ 9.3.1.2 Applications for Payment shall not include requests for payment for portions of the Work for which the Contractor does not intend to pay a Subcontractor or supplier, unless such Work has been performed by others whom the Contractor intends to pay.

§ 9.3.2 Unless otherwise provided in the Contract Documents, payments shall be made on account of materials and equipment delivered and suitably stored at the site for subsequent incorporation in the Work. If approved in advance by the Owner, payment may similarly be made for materials and equipment suitably stored off the site at a location agreed upon in writing and bonded or insured as required by the Owner. Payment for materials and equipment stored on or off the site shall be conditioned upon compliance by the Contractor with procedures satisfactory to the Owner to establish the Owner's title to such materials and equipment or otherwise protect the Owner's interest, and shall include the costs of applicable insurance, storage, and transportation to the site, for such materials and equipment stored off the site. The Contractor shall submit, within 30 days after the date of commencement of the Work and thereafter as the Owner

requires, schedules of materials and equipment for each category or subcontract for which application for payment under this Section 9.3.2 will be made, which schedules shall include items, quantities, value of unit prices with extensions. Schedules shall be updated on a monthly basis and submitted as an attachment to the Contractor's Application for Payment.

§ 9.3.3 The Contractor warrants that title to all Work covered by an Application for Payment will pass to the Owner no later than the time of payment. The Contractor further warrants that upon submittal of an Application for Payment all Work for which Certificates for Payment have been previously issued and payments received from the Owner shall, to the best of the Contractor's knowledge, information, and belief, be free and clear of liens, claims, security interests, or encumbrances, in favor of the Contractor, Subcontractors, suppliers, or other persons or entities that provided labor, materials, and equipment relating to the Work.

§ 9.4 Certificates for Payment

§ 9.4.1 The Architect will, within seven days after receipt of the Contractor's Application for Payment, either (1) issue to the Owner a Certificate for Payment in the full amount of the Application for Payment, with a copy to the Contractor; or (2) issue to the Owner a Certificate for Payment for such amount as the Architect determines is properly due, and notify the Contractor and Owner of the Architect's reasons for withholding certification in part as provided in Section 9.5.1; or (3) withhold certification of the entire Application for Payment, and notify the Contractor and Owner of the Architect's reason for withholding certification in whole as provided in Section 9.5.1.

§ 9.4.2 The issuance of a Certificate for Payment will constitute a representation by the Architect to the Owner, based on the Architect's evaluation of the Work and the data in the Application for Payment, that, to the best of the Architect's knowledge, information, and belief, the Work has progressed to the point indicated, the quality of the Work is in accordance with the Contract Documents, and that the Contractor is entitled to payment in the amount certified. The foregoing representations are subject to an evaluation of the Work for conformance with the Contract Documents upon Substantial Completion, to results of subsequent tests and inspections, to correction of minor deviations from the Contract Documents prior to completion, and to specific qualifications expressed by the Architect. However, the issuance of a Certificate for Payment will not be a representation that the Architect has (1) made exhaustive or continuous on-site inspections to check the quality or quantity of the Work; (2) reviewed construction means, methods, techniques, sequences, or procedures; (3) reviewed copies of requisitions received from Subcontractors and suppliers and other data requested by the Owner to substantiate the Contractor's right to payment; or (4) made examination to ascertain how or for what purpose the Contractor has used money previously paid on account of the Contract Sum.

§ 9.5 Decisions to Withhold Certification

§ 9.5.1 The Architect may withhold a Certificate for Payment, in whole or in part, to the extent reasonably necessary to protect the Owner, if in the Architect's opinion the representations to the Owner required by Section 9.4.2 cannot be made. If the Architect is unable to certify payment in the amount of the Application, the Architect will notify the Contractor and Owner as provided in Section 9.4.1. If the Contractor and Architect cannot agree on a revised amount, the Architect will promptly issue a Certificate for Payment for the amount for which the Architect is able to make such representations to the Owner. The Architect may also withhold a Certificate for Payment or, because of subsequently discovered evidence, may nullify the whole or a part of a Certificate for Payment previously issued, to such extent as may be necessary in the Architect's opinion to protect the Owner from loss for which the Contractor is responsible, including loss resulting from acts and omissions described in Section 3.3.2, because of

- **.1** defective Work not remedied;
- **.2** third party claims filed or reasonable evidence indicating probable filing of such claims, unless security acceptable to the Owner is provided by the Contractor;
- **.3** failure of the Contractor to make payments properly to Subcontractors or suppliers for labor, materials or equipment;
- **.4** reasonable evidence that the Work cannot be completed for the unpaid balance of the Contract Sum;
- **.5** damage to the Owner or a Separate Contractor;
- **.6** reasonable evidence that the Work will not be completed within the Contract Time, and that the unpaid balance would not be adequate to cover actual or liquidated damages for the anticipated delay; or
- **.7** repeated failure to carry out the Work in accordance with the Contract Documents.

DRAFT

§ 9.5.2 When ~~either party disputes the Architect's decision regarding a Certificate for Payment under Section 9.5.1, in whole or in part, that party may submit a Claim in accordance with Article 15~~ the reasons for withholding certification are removed, certification will be made for amounts previously withheld.

§ 9.5.3 When the reasons for withholding certification are removed, certification will be made for amounts previously withheld.

§ 9.5.4 If the Contractor disputes any determination by the Architect and/or Owner with respect to any Certificate of Payment, the Contractor nevertheless expeditiously shall continue to complete the Work. ~~If the Architect withholds certification for payment under Section 9.5.1.3, the Owner may, at its sole option, issue joint checks to the Contractor and to any Subcontractor or supplier to whom the Contractor failed to make payment for Work properly performed or material or equipment suitably delivered. If the Owner makes payments by joint check, the Owner shall notify the Architect and the Contractor shall reflect such payment on its next Application for Payment.~~

§ 9.6 Progress Payments

§ 9.6.1 After the Architect has issued a Certificate for Payment, the Owner shall make payment in the manner and within the time provided in the Contract Documents and shall so notify the Architect.

§ 9.6.2 The Contractor shall pay each Subcontractor, no later than seven days after receipt of payment from the Owner, the amount to which the Subcontractor is entitled, reflecting percentages actually retained from payments to the Contractor on account of the Subcontractor's portion of the Work. The Contractor shall, by appropriate agreement with each Subcontractor, require each Subcontractor to make payments to Sub-subcontractors in a similar manner.

§ 9.6.3 The Architect will, on request, furnish to a Subcontractor, if practicable, information regarding percentages of completion or amounts applied for by the Contractor and action taken thereon by the Architect and Owner on account of portions of the Work done by such Subcontractor.

§ 9.6.4 The Owner has the right to request written evidence from the Contractor that the Contractor has properly paid Subcontractors and suppliers amounts paid by the Owner to the Contractor for subcontracted Work. If the Contractor fails to furnish such evidence within seven days, the Owner shall have the right to contact Subcontractors and suppliers to ascertain whether they have been properly paid. Neither the Owner nor Architect shall have an obligation to pay, or to see to the payment of money to, a Subcontractor or supplier, except as may otherwise be required by law.

§ 9.6.5 The Contractor's payments to suppliers shall be treated in a manner similar to that provided in Sections 9.6.2, 9.6.3 and 9.6.4.

§ 9.6.6 A Certificate for Payment, a progress payment, or partial or entire use or occupancy of the Project by the Owner shall not constitute acceptance of Work not in accordance with the Contract Documents.

§ 9.6.7 Unless the Contractor provides the Owner with a payment bond in the full penal sum of the Contract Sum, payments received by the Contractor for Work properly performed by Subcontractors or provided by suppliers shall be held by the Contractor for those Subcontractors or suppliers who performed Work or furnished materials, or both, under contract with the Contractor for which payment was made by the Owner. ~~Nothing contained herein shall require money to be placed in a separate account and not commingled with money of the Contractor, create any fiduciary liability or tort liability on the part of the Contractor for breach of trust, or entitle any person or entity to an award of punitive damages against the Contractor for breach of the requirements of this provision.~~

§ 9.6.8 Provided the Owner has fulfilled its payment obligations under the Contract Documents, the Contractor shall defend and indemnify the Owner from all loss, liability, damage or expense, including reasonable attorney's fees and litigation expenses, arising out of any lien claim or other claim for payment by any Subcontractor or supplier of any tier. Upon receipt of notice of a lien claim or other claim for payment, the Owner shall notify the Contractor. If approved by the applicable court, when required, the Contractor may substitute a surety bond for the property against which the lien or other claim for payment has been asserted.

§ 9.7 Failure of Payment

If the Architect does not issue a Certificate for Payment, through no fault of the Contractor, within ~~seven~~ fourteen days after receipt of the Contractor's Application for Payment, or if the Owner does not pay the Contractor within ~~seven~~ fourteen days after the date established in the Contract Documents, the amount certified by the Architect ~~or awarded by binding dispute resolution~~, then the Contractor may, upon seven additional days' notice to the Owner and Architect, stop the Work until payment of the amount ~~owing~~ not in dispute has been received. The Contract Time shall be extended appropriately and the Contract Sum shall be increased by the amount of the Contractor's reasonable direct costs of shutdown, ~~delay~~ and start-up~~, plus interest~~ as provided for in the Contract Documents. Notwithstanding the preceding sentence, the Contractor shall not stop the Work during the pendency of a bona fide dispute between the Owner and the Contractor, provided all sums not in dispute claimed by the Contractor are paid.

§ 9.8 Substantial Completion

§ 9.8.1 Substantial Completion is the stage in the progress of the Work when the Work or designated portion thereof is sufficiently complete in accordance with the Contract Documents so that the Owner can occupy or utilize the Work for its intended use. For the Work or any designated portion thereof to be "Substantially Complete", the Work must also satisfy all of the following conditions, except to the extent the same shall be specifically waived or modified in writing by the Owner:

.1 the Work has been completed in accordance with the Contract Documents, except for Punch List Work, to the extent required for the Owner to obtain an occupancy permit and such permit(s) shall have been granted by the appropriate authorities for all of the Work; and

.2 all HVAC, plumbing and electrical systems included in the Work are functioning substantially in accordance with the Contract Documents; and

.3 all life safety systems included in the Work are functioning in accordance with the Contract Documents; and

.4 a Certificate of Substantial Completion has been issued by the Architect as required under Paragraph 9.8; and

.5 all elevators, if any, included in the Work are functioning in accordance with the Contract Documents; and

.6 all offices, rooms and public areas are ready to receive, or have received if required for issuance of a Certificate of Occupancy, furniture, fixtures and equipment supplied by the Owner.

§ 9.8.2 When the Contractor considers that the Work, or a portion thereof which the Owner agrees to accept separately, is substantially complete, the Contractor shall prepare and submit to the Architect and Owner a comprehensive list of items to be completed or corrected prior to final payment. Failure to include an item on such list does not alter the responsibility of the Contractor to complete all Work in accordance with the Contract Documents.

§ 9.8.3 Upon receipt of the Contractor's list, the Architect and Owner will ~~make~~ perform an inspection to determine whether the Work or designated portion thereof is substantially complete. If the Architect's and or the Owner's inspection discloses any item, whether or not included on the Contractor's list, which is not sufficiently complete in accordance with the Contract Documents so that the Owner can occupy or utilize the Work or designated portion thereof for its intended use, the Contractor shall, before issuance of the Certificate of Substantial Completion, complete or correct such item upon notification by the Architect. In such case, the Contractor shall then submit a request for another inspection by the Architect and Owner to determine Substantial Completion.

§ 9.8.4 When the Work or designated portion thereof is determined to be substantially complete, the Architect will prepare a Certificate of Substantial Completion, utilizing the Owner's Procore platform, that shall establish the date of Substantial Completion; establish responsibilities of the Owner and Contractor for security, maintenance, heat, utilities, damage to the Work and insurance; and fix the time of thirty (30) days within which the Contractor shall finish all items on the list. Warranties required by the Contract Documents shall commence on the date of Substantial Completion of the Work or designated portion thereof unless otherwise provided in the Certificate of Substantial Completion.

§ 9.8.5 ~~When the Work or designated portion thereof is substantially complete,~~ The Architect, as the Owner's representative, including all Project Consultants, shall prepare a single list of items (Punch List) to be completed by the Contractor. The Punch List shall include close out requirements, not limited to, Operations and Maintenance Manual, warrantees, and as built drawings, contingent on Project completion, which will be submitted to the Contractor. The

Contractor will assign a cost estimate for each item then submit the Punch List to the Architect and Owner for review and acceptance. Estimated costs to render the Project complete, satisfactory and acceptable are to be agreeable to the Contractor, Owner and Architect. The development and review of the Punch List shall be completed within 30 calendar days, or 45 calendar days by applicable law and mutual agreement of Contractor and Owner, of the substantial completion date and shall be issued by the Architect to the Contractor and Owner within five (5) days of acceptance by all parties. Within twenty (20) business days after the final Punch List is issued, the Owner must pay the Contractor the remaining contract balance that includes all retainage previously withheld less an amount equal to one hundred fifty percent (150%) of the estimated cost to complete the Punch List items. ~~will prepare a Certificate of Substantial Completion that shall establish the date of Substantial Completion; establish responsibilities of the Owner and Contractor for security, maintenance, heat, utilities, damage to the Work and insurance; and fix the time within which the Contractor shall finish all items on the list accompanying the Certificate. Warranties required by the Contract Documents shall commence on the date of Substantial Completion of the Work or designated portion thereof unless otherwise provided in the Certificate of Substantial Completion.~~

§ 9.8.6 The Certificate of Substantial Completion shall be submitted to the Owner and Contractor for their written acceptance of responsibilities assigned to them in the Certificate. ~~Upon such acceptance, and consent of surety if any, the Owner shall make payment of retainage applying to the Work or designated portion thereof. Such payment shall be adjusted for Work that is incomplete or not in accordance with the requirements of the Contract Documents.~~

§ 9.8.7 The Owner shall have the right to take possession of and use any completed or partially completed portions of the Work, notwithstanding that the time for completing the entire Work or such portions of the Work may not yet have expired. However, such action on the part of the Owner shall not be deemed to be an acceptance of any Work not completed in accordance with the Contract Documents. Likewise, absent the issuance of a Certificate of Substantial Completion by the Project Architect, no portion of the Work shall be subject to the running of the Contractor's bonded one (1) year guarantee on workmanship and materials, despite the fact that the building may be partially utilized. Where mechanical equipment is used prior to final inspection, the Owner shall perform routine maintenance and furnish those supplies that normally wear out in use, such as seals, packings, lubricants, etc. However, any major failure or breakdown of equipment not attributable to lack of maintenance or improper use or abuse of the equipment by the Owner shall be made good by the Contractor under terms of its contract warranty, guarantee, bonds, etc.

§ 9.9 Partial Occupancy or Use

§ 9.9.1 The Owner may occupy or use any completed or partially completed portion of the Work at any stage when such portion is designated by separate agreement with the Contractor, provided such occupancy or use is consented to by the insurer and authorized by public authorities having jurisdiction over the Project. Such partial occupancy or use may commence whether or not the portion is substantially complete, provided the Owner and Contractor have accepted in writing the responsibilities assigned to each of them for payments, retainage, if any, security, maintenance, heat, utilities, damage to the Work and insurance, and have agreed in writing concerning the period for correction of the Work and commencement of warranties required by the Contract Documents. When the Contractor considers a portion substantially complete, the Contractor shall prepare and submit a list to the Architect as provided under Section 9.8.2, 9.8.3, 9.8.4 and 9.8.5. Consent of the Contractor to partial occupancy or use shall not be unreasonably withheld. The stage of the progress of the Work shall be determined by written agreement between the Owner and Contractor or, if no agreement is reached, by decision of the Architect.

§ 9.9.2 Immediately prior to such partial occupancy or use, the Owner, Contractor, and Architect shall jointly inspect the area to be occupied or portion of the Work to be used in order to determine and record the condition of the Work.

§ 9.9.3 Unless otherwise agreed upon, partial occupancy or use of a portion or portions of the Work shall not constitute acceptance of Work not complying with the requirements of the Contract Documents.

§ 9.10 Final Completion and Final Payment

§ 9.10.1 Upon receipt of the Contractor's notice that the Work is ready for final inspection and acceptance and upon receipt of a final Application for Payment, the Architect will promptly make such inspection. When the Architect finds the Work acceptable under the Contract Documents and the Contract fully performed, the Architect will promptly issue a final Certificate for Payment stating that to the best of the Architect's knowledge, information and belief, and on the basis of the Architect's on-site visits and inspections, the Work has been completed in accordance with the Contract

Documents and that the entire balance found to be due the Contractor and noted in the final Certificate is due and payable. The Architect's final Certificate for Payment will constitute a further representation that conditions listed in Section 9.10.2 as precedent to the Contractor's being entitled to final payment have been fulfilled.

§ 9.10.2 Neither final payment nor any remaining retained percentage shall become due until the Contractor submits to the Architect (1) an affidavit that payrolls, bills for materials and equipment, and other indebtedness connected with the Work for which the Owner or the Owner's property might be responsible or encumbered (less amounts withheld by Owner) have been paid or otherwise satisfied, (2) a certificate evidencing that insurance required by the Contract Documents to remain in force after final payment is currently in effect, (3) a written statement that the Contractor knows of no reason that the insurance will not be renewable to cover the period required by the Contract Documents, (4) consent of surety, if any, to final payment, (5) documentation of any special warranties, such as manufacturers' warranties or specific Subcontractor warranties, and (6) if required by the Owner, other data establishing payment or satisfaction of obligations, such as receipts and releases and waivers of liens, claims, security interests, or encumbrances arising out of the Contract, to the extent and in such form as may be designated by the Owner. If a Subcontractor refuses to furnish a release or waiver required by the Owner, the Contractor may furnish a bond satisfactory to the Owner to indemnify the Owner against such lien, claim, security interest, or encumbrance. If a lien, claim, security interest, or encumbrance remains unsatisfied after payments are made, the Contractor shall refund to the Owner all money that the Owner may be compelled to pay in discharging the lien, claim, security interest, or encumbrance, including all costs and reasonable attorneys' fees. As a condition precedent to Final Payment, and as part of the Application for Payment, the Contractor shall deliver to the Owner all warranties, guarantees and other close out documents required under the Contract Documents.

§ 9.10.2.1 Final Payment is also contingent upon Building Official final inspection and Owner acceptance of the Department of Education (DOE) document OEF 209, Certificate of Final Inspection (CFI).

§ 9.10.3 If, after Substantial Completion of the Work, final completion thereof is materially delayed through no fault of the Contractor or by issuance of Change Orders affecting final completion, and the Architect so confirms, the Owner shall, upon application by the Contractor and certification by the Architect, and without terminating the Contract, make payment of the balance due for that portion of the Work fully completed, corrected, and accepted. If the remaining balance for Work not fully completed or corrected is less than retainage stipulated in the Contract Documents, and if bonds have been furnished, the written consent of the surety to payment of the balance due for that portion of the Work fully completed and accepted shall be submitted by the Contractor to the Architect prior to certification of such payment. Such payment shall be made under terms and conditions governing final payment, except that it shall not constitute a waiver of Claims.

§ 9.10.4 The making of final payment shall constitute a waiver of Claims by the Owner except those arising from

- **.1** liens, Claims, security interests, or encumbrances arising out of the Contract and unsettled;
- **.2** failure of the Work to comply with the requirements of the Contract Documents;
- **.3** terms of special warranties required by the Contract Documents; or
- **.4** audits performed by the Owner, if permitted by the Contract Documents, after final payment.

§ 9.10.5 Acceptance of final payment by the Contractor, a Subcontractor, or a supplier, shall constitute a waiver of claims by that payee except those previously made in writing and identified by that payee as unsettled at the time of final Application for Payment.

§ 9.10.6 After execution of the Certificate of Substantial Completion and the Certificate of Final Inspection (CFI), and prior to the submittal of the Final Certificate and Application for Payment, the Contractor shall submit to the Architect, along with the affidavits and other documents set forth in Section 9.10.2 above:

- **.1** Validated warranties and notarized copies of all guarantees for equipment and materials as required by the Construction Documents, and, if applicable, as referred to in the Supplementary Conditions;
- **.2** Copies of all approved Shop Drawings or installation diagrams and three (3) copies of all brochures, manuals, etc. of all equipment as offered by the manufacturers;
- **.3** List of subcontractors and major material suppliers (shall include address, telephone number and name of individual to contact regarding this Project); and

.4 As built drawings of the completed Project in paper document and combined PDF or other Architect and Owner acceptable digital format, on CD, DVD or other approved file transfer protocol (FTP), transmitted from the Contractor to the Architect for review and acceptance; Architect shall review for inclusion in the record drawings then transmit to the Owner.

§ 9.10.7 Prior to submission of the Final Certificate and Application for Payment, Contractor and manufacturer's representatives shall provide free instruction in the proper use of installed equipment to representatives of the Owner as designated by the Architect. Instruction shall be given in presence of the Architect.

§ 9.10.7.1 Instruction of the Owner's designated Maintenance Supervisor in the proper methods of cleaning and maintaining all of the finished surfaces and the proper methods of replacement of the consumable items such as filters, light bulbs, washers, etc. shall be the responsibility of the Contractor.

§ 9.10.8 Prior to submission of the Final Certificate and Application for Payment, the Contractor shall start up, test, adjust, balance and otherwise place in a satisfactory working condition all items of mechanical and electrical systems and shall fully instruct representatives of the Owner in the care and operation of such systems.

§ 9.10.8.1 Contractor shall submit to the Architect, along with final requisition for payment, two (2) copies of a manual for the Project, assembled and bound, presenting for the Owner's guidance full details for care and maintenance of equipment included in the Contract.

§ 9.10.8.2 Contractor shall, for this manual, obtain from subcontractors literature of manufacturers relating to equipment, including motors; also furnish cuts, wiring diagrams, instruction sheets and other information pertaining to same in overall operation and maintenance.

§ 9.10.9 During a valid warranty period, if the Contractor is unable or unwilling to respond immediately to make emergency repairs under conditions which the Owner may determine to be an emergency situation, the Owner reserves the right to make such emergency repairs and then to bill the Contractor for a fair and reasonable amount in the reimbursement for such repair.

ARTICLE 10 PROTECTION OF PERSONS AND PROPERTY

§ 10.1 Safety Precautions and Programs

The Contractor shall be responsible for initiating, maintaining, and supervising all safety precautions and programs in connection with the performance of the Contract.

§ 10.2 Safety of Persons and Property

§ 10.2.1 The Contractor shall take reasonable precautions for safety of, and shall provide reasonable protection to prevent damage, injury, or loss to

.1 employees on the Work and other persons who may be affected thereby;

.2 the Work and materials and equipment to be incorporated therein, whether in storage on or off the site, under care, custody, or control of the Contractor, a Subcontractor, or a Sub-subcontractor; and

.3 other property at the site or adjacent thereto, such as trees, shrubs, lawns, walks, pavements, roadways, structures, and utilities not designated for removal, relocation, or replacement in the course of construction.

§ 10.2.2 The Contractor shall comply with, and give notices required by applicable laws, statutes, ordinances, codes, rules and regulations, and lawful orders of public authorities, bearing on safety of persons or property or their protection from damage, injury, or loss. Contractor shall comply with all applicable federal, state and county, and city statutes, safety regulations, codes, ordinances and orders, including the Occupational Safety and Health Administration Act of 1970 (OSHA).

§ 10.2.3 The Contractor shall implement, erect, and maintain, as required by existing conditions and performance of the Contract, reasonable safeguards for safety and protection, including posting danger signs and other warnings against hazards; promulgating safety regulations; and notifying the owners and users of adjacent sites and utilities of the safeguards.

§ 10.2.4 When use or storage of explosives or other hazardous materials or equipment, or unusual methods are necessary for execution of the Work, the Contractor shall exercise utmost care and carry on such activities under supervision of properly qualified personnel.

§ 10.2.5 The Contractor shall promptly remedy damage and loss (other than damage or loss insured under property insurance required by the Contract Documents) to property referred to in Sections 10.2.1.2 and 10.2.1.3 caused in whole or in part by the Contractor, a Subcontractor, a Sub-subcontractor, or anyone directly or indirectly employed by any of them, or by anyone for whose acts they may be liable and for which the Contractor is responsible under Sections 10.2.1.2 and 10.2.1.3. The Contractor may make a Claim for the cost to remedy the damage or loss to the extent such damage or loss is attributable to acts or omissions of the Owner or Architect or anyone directly or indirectly employed by either of them, or by anyone for whose acts either of them may be liable, and not attributable to the fault or negligence of the Contractor. The foregoing obligations of the Contractor are in addition to the Contractor's obligations under Section 3.18.

§ 10.2.6 The Contractor shall designate a responsible member of the Contractor's organization at the site whose duty shall be the prevention of accidents. This person shall be the Contractor's superintendent unless otherwise designated by the Contractor in writing to the Owner and Architect.

§ 10.2.7 The Contractor shall not permit any part of the construction or site to be loaded so as to cause damage or create an unsafe condition.

§ 10.2.8 Injury or Damage to Person or Property
If either party suffers injury or damage to person or property because of an act or omission of the other party, or of others for whose acts such party is legally responsible, written notice of the injury or damage, whether or not insured, shall be given to the other party within a reasonable time not exceeding 21 days after discovery. The notice shall provide sufficient detail to enable the other party to investigate the matter.

§ 10.2.9 Contractor shall protect adjoining private or municipal property and shall provide barricades, temporary fences, and covered walkways required to protect the safety of passers-by, as required by prudent construction practices, local building codes, ordinances or other laws, or the Contract Documents.

§ 10.2.10 Contractor shall maintain Work, materials and apparatus free from injury or damage from rain, wind, storms, frost or heat. If adverse weather makes it impossible to continue operations safely in spite of weather precautions, the Contractor shall cease Work and notify the Owner and the Architect of such cessation. The Contractor shall not permit open fires on the Project site.

§ 10.2.11 In addition to its other obligations pursuant to this Article 10, the Contractor shall, at its sole cost and expense, promptly repair any damage or disturbance to walls, utilities, sidewalks, curbs and the property of third parties (including municipalities) resulting from the performance of the Work, whether by it or by its Subcontractors at any tier. The Contractor shall maintain streets in good repair and traversable condition.

§ 10.3 Hazardous Materials and Substances
§ 10.3.1 The Owner has on file at each school and the department of Facilities Services, the following information: (1) Asbestos Management Plan, and (2) Asbestos Survey Report. These documents are available for the Contractor's review at the above locations. The Contractor shall determine if the information contained therein is relevant to the Project. The Contractor shall execute the Owner's "Contractor Acknowledgement Form" of these documents. ~~The Contractor is responsible for compliance with any requirements included in the Contract Documents regarding hazardous materials or substances. If the Contractor encounters a hazardous material or substance not addressed in the Contract Documents and if reasonable precautions will be inadequate to prevent foreseeable bodily injury or death to persons resulting from a material or substance, including but not limited to asbestos or polychlorinated biphenyl (PCB), encountered on the site by the Contractor, the Contractor shall, upon recognizing the condition, immediately stop Work in the affected area and notify the Owner and Architect of the condition.~~

§ 10.3.1.1 If during the construction of the Project any known hazardous material, or friable asbestos is suspected or encountered, Work in that area shall be suspended and the Owner's Representative shall be notified immediately.

§ 10.3.1.2 The Owner shall be responsible for investigation, removal and disposition of any such material in accordance with applicable laws and regulations. The Contractor will be directed by the Owner on further procedures concerning the project as a result of investigation, removal and disposition of such material.

§ 10.3.2 In the event the Contractor encounters on the site material reasonably believed to be asbestos or polychlorinated biphenyl (PCB) which has not been rendered harmless, the Contractor shall immediately stop Work in the area affected and report the condition to the Owner's Representative in writing. The Work in the affected area shall not thereafter be resumed except by written agreement of the Owner and Contractor if in fact the material is asbestos or polychlorinated biphenyl (PCB) and has not been rendered harmless. The Work in the affected area shall be resumed in the absence of asbestos or polychlorinated biphenyl (PCB), or when it has been rendered harmless, by written agreement of the Owner and Contractor, or in accordance with final determination by the Architect. ~~Upon receipt of the Contractor's notice, the Owner shall obtain the services of a licensed laboratory to verify the presence or absence of the material or substance reported by the Contractor and, in the event such material or substance is found to be present, to cause it to be rendered harmless. Unless otherwise required by the Contract Documents, the Owner shall furnish in writing to the Contractor and Architect the names and qualifications of persons or entities who are to perform tests verifying the presence or absence of the material or substance or who are to perform the task of removal or safe containment of the material or substance. The Contractor and the Architect will promptly reply to the Owner in writing stating whether or not either has reasonable objection to the persons or entities proposed by the Owner. If either the Contractor or Architect has an objection to a person or entity proposed by the Owner, the Owner shall propose another to whom the Contractor and the Architect have no reasonable objection. When the material or substance has been rendered harmless, Work in the affected area shall resume upon written agreement of the Owner and Contractor. By Change Order, the Contract Time shall be extended appropriately and the Contract Sum shall be increased by the amount of the Contractor's reasonable additional costs of shutdown, delay, and start-up.~~

§ 10.3.3 The Contractor shall not be required, pursuant to Article 13, perform without consent any Work relating to asbestos or polychlorinated biphenyl (PCB). ~~To the fullest extent permitted by law, the Owner shall indemnify and hold harmless the Contractor, Subcontractors, Architect, Architect's consultants, and agents and employees of any of them from and against claims, damages, losses, and expenses, including but not limited to attorneys' fees, arising out of or resulting from performance of the Work in the affected area if in fact the material or substance presents the risk of bodily injury or death as described in Section 10.3.1 and has not been rendered harmless, provided that such claim, damage, loss, or expense is attributable to bodily injury, sickness, disease or death, or to injury to or destruction of tangible property (other than the Work itself), except to the extent that such damage, loss, or expense is due to the fault or negligence of the party seeking indemnity.~~

§ 10.3.4 To the fullest extent permitted by law, the Owner shall defend, indemnify and hold harmless the Contractor and its agents and employees from and against claims, losses and expenses, including but not limited to attorney's fees, arising out of or resulting from performance of the Work in the affected area if in fact the material is asbestos or polychlorinated biphenyl (PCB) and has not been rendered harmless, provided that such claim, damage, loss or expense is attributable to bodily injury, sickness, disease or death, or to injury to or destruction of tangible property, other than the Work itself, including loss of use resulting therefrom, but only to the extent caused in whole or in part by negligent acts or omissions of the Owner, anyone directly or indirectly employed by the Owner, or anyone for whose acts the Owner may be liable. ~~The Owner shall not be responsible under this Section 10.3 for hazardous materials or substances the Contractor brings to the site unless such materials or substances are required by the Contract Documents. The Owner shall be responsible for hazardous materials or substances required by the Contract Documents, except to the extent of the Contractor's fault or negligence in the use and handling of such materials or substances.~~

§ 10.3.5 The Contractor shall reimburse the Owner for the cost and expense the Owner incurs (1) for remediation of hazardous materials or substances the Contractor brings to the site and negligently handles, or (2) where the Contractor fails to perform its obligations under Section 10.3.1, except to the extent that the cost and expense are due to the Owner's fault or negligence.

§ 10.3.6 ~~If, without negligence on the part of the Contractor, the Contractor is held liable by a government agency for the cost of remediation of a hazardous material or substance solely by reason of performing Work as required by the Contract Documents, the Owner shall reimburse the Contractor for all cost and expense thereby incurred.~~

DRAFT

§ 10.4 Emergencies
In an emergency affecting safety of persons or property, the Contractor shall act, at the Contractor's discretion, to prevent threatened damage, injury, or loss. Additional compensation or extension of time claimed by the Contractor on account of an emergency shall be determined as provided in Article 15 and Article 7.

ARTICLE 11 INSURANCE AND BONDS

§ 11.1 Contractor's Insurance and Bonds

§ 11.1.1 The Contractor shall purchase and maintain insurance of the types and limits of liability, containing the endorsements, and subject to the terms and conditions, as described in the Agreement or elsewhere in the Contract Documents. The Contractor shall purchase and maintain the required insurance from an insurance company or insurance companies lawfully authorized to issue insurance in the jurisdiction where the Project is located. The Owner, Architect, and Architect's consultants shall be named as additional insureds under the Contractor's commercial general liability policy or as otherwise described in the Contract Documents.

§ 11.1.2 The Contractor shall provide surety bonds of the types, for such penal sums, and subject to such terms and conditions as required by the Contract Documents. The Contractor shall purchase and maintain the required bonds from a company or companies lawfully authorized to issue surety bonds in the jurisdiction where the Project is located.

§ 11.1.3 Upon the request of any person or entity appearing to be a potential beneficiary of bonds covering payment of obligations arising under the Contract, the Contractor shall promptly furnish a copy of the bonds or shall authorize a copy to be furnished.

§ 11.1.4 Notice of Cancellation or Expiration of Contractor's Required Insurance. Within three (3) business days of the date the Contractor becomes aware of an impending or actual cancellation or expiration of any insurance required by the Contract Documents, the Contractor shall provide notice to the Owner of such impending or actual cancellation or expiration. Upon receipt of notice from the Contractor, the Owner shall, unless the lapse in coverage arises from an act or omission of the Owner, have the right to stop the Work until the lapse in coverage has been cured by the procurement of replacement coverage by the Contractor. The furnishing of notice by the Contractor shall not relieve the Contractor of any contractual obligation to provide any required coverage.

§ 11.2 Owner's Insurance

§ 11.2.1 The Owner shall purchase and maintain insurance ~~of the types and limits of liability, containing the endorsements, and subject to the terms and conditions,~~ as described in the Agreement or elsewhere in the Contract Documents. ~~The Owner shall purchase and maintain the required insurance from an insurance company or insurance companies lawfully authorized to issue insurance in the jurisdiction where the Project is located.~~

§ 11.2.2 ~~**Failure to Purchase Required Property Insurance.** If the Owner fails to purchase and maintain the required property insurance, with all of the coverages and in the amounts described in the Agreement or elsewhere in the Contract Documents, the Owner shall inform the Contractor in writing prior to commencement of the Work. Upon receipt of notice from the Owner, the Contractor may delay commencement of the Work and may obtain insurance that will protect the interests of the Contractor, Subcontractors, and Sub-Subcontractors in the Work. When the failure to provide coverage has been cured or resolved, the Contract Sum and Contract Time shall be equitably adjusted. In the event the Owner fails to procure coverage, the Owner waives all rights against the Contractor, Subcontractors, and Sub-subcontractors to the extent the loss to the Owner would have been covered by the insurance to have been procured by the Owner. The cost of the insurance shall be charged to the Owner by a Change Order. If the Owner does not provide written notice, and the Contractor is damaged by the failure or neglect of the Owner to purchase or maintain the required insurance, the Owner shall reimburse the Contractor for all reasonable costs and damages attributable thereto.~~

§ 11.2.3 ~~**Notice of Cancellation or Expiration of Owner's Required Property Insurance.** Within three (3) business days of the date the Owner becomes aware of an impending or actual cancellation or expiration of any property insurance required by the Contract Documents, the Owner shall provide notice to the Contractor of such impending or actual cancellation or expiration. Unless the lapse in coverage arises from an act or omission of the Contractor: (1) the Contractor, upon receipt of notice from the Owner, shall have the right to stop the Work until the lapse in coverage has been cured by the procurement of replacement coverage by either the Owner or the Contractor; (2) the Contract Time and Contract Sum shall be equitably adjusted; and (3) the Owner waives all rights against the Contractor, Subcontractors, and Sub-~~

~~subcontractors to the extent any loss to the Owner would have been covered by the insurance had it not expired or been cancelled. If the Contractor purchases replacement coverage, the cost of the insurance shall be charged to the Owner by an appropriate Change Order. The furnishing of notice by the Owner shall not relieve the Owner of any contractual obligation to provide required insurance.~~

§ 11.3 Waivers of Subrogation

§ 11.3.1 The Owner and Contractor waive all rights against (1) each other and any of their subcontractors, sub-subcontractors, agents, and employees, each of the other; (2) the Architect and Architect's consultants; and (3) Separate Contractors, if any, and any of their subcontractors, sub-subcontractors, agents, and employees, for damages caused by fire, or other causes of loss, to the extent those losses are covered by property insurance required by the Agreement or other property insurance applicable to the Project, except such rights as they have to proceeds of such insurance. The Owner or Contractor, as appropriate, shall require similar written waivers in favor of the individuals and entities identified above from the Architect, Architect's consultants, Separate Contractors, subcontractors, and sub-subcontractors. The policies of insurance purchased and maintained by each person or entity agreeing to waive claims pursuant to this Section 11.3.1 shall not prohibit this waiver of subrogation. This waiver of subrogation shall be effective as to a person or entity (1) even though that person or entity would otherwise have a duty of indemnification, contractual or otherwise, (2) even though that person or entity did not pay the insurance premium directly or indirectly, or (3) whether or not the person or entity had an insurable interest in the damaged property.

§ 11.3.2 If required in writing by a party in interest, the Owner as fiduciary shall, upon occurrence of an insured loss, give bond for proper performance of the Owner's duties. The cost of required bonds shall be charged against proceeds received as fiduciary. The Owner shall deposit in a separate account proceeds so received, which the Owner shall distribute in accordance with such agreement as the parties in interest may reach. If after such loss no other special agreement is made and unless the Owner terminates the Contract for convenience, replacement of damaged property shall be performed by the Contractor after notification of a Change in the Work in accordance with Article 7. ~~If during the Project construction period the Owner insures properties, real or personal or both, at or adjacent to the site by property insurance under policies separate from those insuring the Project, or if after final payment property insurance is to be provided on the completed Project through a policy or policies other than those insuring the Project during the construction period, to the extent permissible by such policies, the Owner waives all rights in accordance with the terms of Section 11.3.1 for damages caused by fire or other causes of loss covered by this separate property insurance.~~

§ 11.3.3 The Owner as fiduciary shall have power to adjust and settle a loss with insurers unless one of the parties in interest shall object in writing within five days after occurrence of loss to the Owner's exercise of this power. If such objection be made, the Owner shall not make any settlement with respect to such loss until a resolution has been reached by agreement between such parties in interest and the insurers or by a court of competent jurisdiction.

§ 11.4 Loss of Use, Business Interruption, and Delay in Completion Insurance

The Owner, at the Owner's option, may require the Contractor to purchase and maintain insurance that will protect the Owner against loss of use of the Owner's property, or the inability to conduct normal operations, due to fire or other causes of loss. ~~The Owner waives all rights of action against the Contractor and Architect for loss of use of the Owner's property, due to fire or other hazards however caused.~~

§11.5 Adjustment and Settlement of Insured Loss

§ 11.5.1 A loss insured under the property insurance required by the Agreement shall be adjusted by the ~~Owner~~ Contractor as fiduciary and made payable to the ~~Owner~~ Contractor as fiduciary for the insureds, as their interests may appear, subject to requirements of any applicable mortgagee clause and of Section 11.5.2. The ~~Owner~~ Contractor shall pay the Architect and ~~Contractor~~ Owner their just shares of insurance proceeds received by the ~~Owner~~ Contractor, and by appropriate agreements the Architect and Contractor shall make payments to their consultants and Subcontractors in similar manner.

§ 11.5.2 Prior to settlement of an insured loss, the ~~Owner~~ Contractor shall notify the ~~Contractor~~ Owner of the terms of the proposed settlement as well as the proposed allocation of the insurance proceeds. The ~~Contractor~~ Owner shall have 14 days from receipt of notice to object to the proposed settlement or allocation of the proceeds. If the ~~Contractor~~ Owner does not object, the ~~Owner~~ Contractor shall settle the loss and the ~~Contractor~~ Owner shall be bound by the settlement and allocation. Upon receipt, the ~~Owner~~ Contractor shall deposit the insurance proceeds in a separate account and make the

appropriate distributions. Thereafter, if no other agreement is made or the Owner does not terminate the Contract for convenience, the Owner and Contractor shall execute a Change Order for reconstruction of the damaged or destroyed Work in the amount allocated for that purpose. If the Contractor timely objects to either the terms of the proposed settlement or the allocation of the proceeds, the Owner may proceed to settle the insured loss, and any dispute between the Owner and Contractor arising out of the settlement or allocation of the proceeds shall be resolved pursuant to Article 15. ~~Pending resolution of any dispute, the Owner may issue a Construction Change Directive for the reconstruction of the damaged or destroyed Work.~~

ARTICLE 12 UNCOVERING AND CORRECTION OF WORK

§ 12.1 Uncovering of Work

§ 12.1.1 If a portion of the Work is covered contrary to the Architect's or Owner's request or to requirements specifically expressed in the Contract Documents, it must, if requested in writing by the Architect or Owner, be uncovered for the Architect's or Owner's examination and be replaced at the Contractor's expense without change in the Contract Time.

§ 12.1.2 If a portion of the Work has been covered that the Architect has not specifically requested to examine prior to its being covered, the Architect may request to see such Work and it shall be uncovered by the Contractor. If such Work is in accordance with the Contract Documents, the Contractor shall be entitled to an equitable adjustment to the Contract Sum and Contract Time as may be appropriate. If such Work is not in accordance with the Contract Documents, the costs of uncovering the Work, and the cost of correction, shall be at the Contractor's expense.

§ 12.2 Correction of Work

§ 12.2.1 Before Substantial Completion

The Contractor shall promptly correct Work rejected by the Architect ~~or~~ for failing to conform to the requirements of the Contract Documents, whether discovered before or after Substantial Completion and whether or not fabricated, installed or completed. Costs of correcting such rejected Work, including additional testing and inspections, the cost of uncovering and replacement, and compensation for the Architect's services and expenses made necessary thereby, shall be at the Contractor's expense.

§ 12.2.2 After Substantial Completion

§ 12.2.2.1 In addition to the Contractor's obligations under Section 3.5, if, within one year after the date of Substantial Completion of the Work or designated portion thereof or after the date for commencement of warranties established under Section 9.9.1, or by terms of any applicable special warranty required by the Contract Documents, any of the Work is found to be not in accordance with the requirements of the Contract Documents, the Contractor shall correct it promptly after receipt of notice from the Owner to do so, unless the Owner has previously given the Contractor a written acceptance of such condition. The Owner shall give such notice promptly after discovery of the condition. ~~During the one-year period for correction of Work, if the Owner fails to notify the Contractor and give the Contractor an opportunity to make the correction, the Owner waives the rights to require correction by the Contractor and to make a claim for breach of warranty.~~ If the Contractor fails to correct nonconforming Work within a reasonable time during that period after receipt of notice from the Owner or Architect, the Owner may correct it in accordance with Section 2.5.

§ 12.2.2.2 The one-year period for correction of Work shall be extended with respect to portions of Work first performed after Substantial Completion by the period of time between Substantial Completion and the actual completion of that portion of the Work.

§ 12.2.2.3 The one-year period for correction of Work shall not be extended by corrective Work performed by the Contractor pursuant to this Section 12.2.

§ 12.2.3 The Contractor shall remove from the site portions of the Work that are not in accordance with the requirements of the Contract Documents and are neither corrected by the Contractor nor accepted by the Owner.

§ 12.2.4 The Contractor shall bear the cost of correcting destroyed or damaged construction of the Owner or Separate Contractors, whether completed or partially completed, caused by the Contractor's correction or removal of Work that is not in accordance with the requirements of the Contract Documents.

DRAFT

§ 12.2.5 Nothing contained in this Section 12.2 shall be construed to establish a period of limitation with respect to other obligations the Contractor has under the Contract Documents. Establishment of the one-year period for correction of Work as described in Section 12.2.2 relates only to the specific obligation of the Contractor to correct the Work, and has no relationship to the time within which the obligation to comply with the Contract Documents may be sought to be enforced, nor to the time within which proceedings may be commenced to establish the Contractor's liability with respect to the Contractor's obligations other than specifically to correct the Work nor to Owner's right to make claim with respect to latent defects.

§ 12.3 Acceptance of Nonconforming Work

If the Owner prefers to accept Work that is not in accordance with the requirements of the Contract Documents, the Owner may do so instead of requiring its removal and correction, in which case the Contract Sum will be reduced as appropriate ~~and equitable~~. Such adjustment shall be effected whether or not final payment has been made.

ARTICLE 13 MISCELLANEOUS PROVISIONS

§ 13.1 Governing Law

The Contract shall be governed by the law of the place where the Project is located ~~excluding that jurisdiction's choice of law rules. If the parties have selected arbitration as the method of binding dispute resolution, the Federal Arbitration Act shall govern Section 15.4~~.

§ 13.1.2 Historical lack of enforcement of any local law shall not constitute a waiver of Contractor's responsibility for compliance with such law in a manner consistent with the Contract Documents unless and until the Contractor has received written consent for the waiver of such compliance from the Owner and the agency responsible for the local law enforcement.

§ 13.2 Successors and Assigns

§ 13.2.1 The Owner and Contractor respectively bind themselves, their partners, successors, assigns, and legal representatives to covenants, agreements, and obligations contained in the Contract Documents. ~~Except as provided in Section 13.2.2, neither party to the Contract shall assign the Contract as a whole without written consent of the other. If either party attempts to make an assignment without such consent, that party~~ Contractor may not assign its rights or obligation under this Contract. If Contractor attempts to make such an assignment, it shall nevertheless remain legally responsible for all obligations under the Contract.

§ 13.2.2 ~~The Owner may, without consent of the Contractor, assign the Contract to a lender providing construction financing for the Project, if the lender assumes the Owner's rights and obligations under the Contract Documents. The Contractor shall execute all consents reasonably required to facilitate the assignment.~~

§ 13.3 Rights and Remedies

§ 13.3.1 Duties and obligations imposed by the Contract Documents and rights and remedies available thereunder shall be in addition to and not a limitation of duties, obligations, rights, and remedies otherwise imposed or available by law.

§ 13.3.2 No action or failure to act by the Owner, Architect, or Contractor shall constitute a waiver of a right or duty afforded them under the Contract, nor shall such action or failure to act constitute approval of or acquiescence in a breach thereunder, except as may be specifically agreed upon in writing.

§ 13.3.3 The invalidity of any part or provision of the Contract Documents shall not impair or affect in any manner the validity, enforceability or effect of the remaining parts and provisions of the Contract Documents.

§ 13.4 Tests and Inspections

§ 13.4.1 Tests, inspections, and approvals of portions of the Work shall be made as required by the Contract Documents and by applicable laws, statutes, ordinances, codes, rules, and regulations or lawful orders of public authorities. Unless otherwise provided, the Contractor shall make arrangements for such tests, inspections, and approvals with an independent testing laboratory or entity acceptable to the Owner, or with the appropriate public authority, and shall bear all related costs of tests, inspections, and approvals. The Contractor shall give the Architect timely notice of when and where tests and inspections are to be made so that the Architect may be present for such procedures. The Owner shall bear costs of tests, inspections, or approvals that do not become requirements until after bids are received or negotiations

concluded. The Owner shall directly arrange and pay for tests, inspections, or approvals where building codes or applicable laws or regulations so require.

§ 13.4.1.1 During construction, periodic building code compliance inspections are required and will be performed by the Owner's building department inspectors when requested by the Contractor. It is the responsibility of the Contractor to properly request such code inspections and no Work shall be covered until such Work has been inspected for code compliance.

§ 13.4.2 If the Architect, Owner, or public authorities having jurisdiction determine that portions of the Work require additional testing, inspection, or approval not included under Section 13.4.1, the Architect will, upon written authorization from the Owner, instruct the Contractor to make arrangements for such additional testing, inspection, or approval, by an entity assigned by the Owner, and the Contractor shall give timely notice to the Architect of when and where tests and inspections are to be made so that the Architect may be present for such procedures. Such costs, except as provided in Section 13.4.3, shall be at the Owner's expense.

§ 13.4.3 If procedures for testing, inspection, or approval under Sections 13.4.1 and 13.4.2 reveal failure of the portions of the Work to comply with requirements established by the Contract Documents, all costs made necessary by such failure, including those of repeated procedures and compensation for the Architect's services and expenses, shall be at the Contractor's expense, including the cost of retesting for verification of compliance if necessary, until the Architect certifies that the Work in question does comply with the requirements of the Contract Documents, and all such costs shall not be included in computing the Contract Sum.

§ 13.4.4 Required certificates of testing, inspection, or approval shall, unless otherwise required by the Contract Documents, be secured by the Contractor and promptly delivered to the Architect.

§ 13.4.5 If the Architect is to observe tests, inspections, or approvals required by the Contract Documents, the Architect will do so promptly and, where practicable, at the normal place of testing.

§ 13.4.6 Tests or inspections conducted pursuant to the Contract Documents shall be made promptly to avoid unreasonable delay in the Work.

§ 13.5 Interest

Payments due and unpaid under the Contract Documents shall bear interest from the date payment is due at the rate the parties agree upon in writing or, in the absence thereof, at the legal rate prevailing from time to time at the place where the Project is located.

§ 13.6 Time Limits on Claims

The Owner and Contractor shall commence all claims and causes of action, whether in contract, tort, breach of warranty or otherwise, against the other arising out of or related to the Contract in accordance with the requirements of the final dispute resolution method selected in the Agreement within the time period specified by applicable law.

§ 13.7 Financial Disclosures

§ 13.7.1 During the term of this Contract, Contractor covenants and agrees that it will keep adequate books and records of accounts in accordance with Generally Accepted Accounting Principles (GAAP). Contractor further covenants and agrees that, upon request from Owner, Contractor shall provide to Owner financial statements of Contractor, including current income and expense statements of Contractor, consolidated balance sheets signed by a financial officer of Contractor, and audited reports provided to Contractor's Surety, audited financial statements certified by a Certified Public Accountant concerning the financial affairs of Contractor and all affiliates of Contractor, and such other financial information requested by Owner. All such financial information shall comply with GAAP.

§ 13.7.2 In the event the Contractor becomes insolvent and/or fails to pay its current obligations when they become due, Contractor shall so advise Owner of such situation. Contractor hereby authorizes its sureties, lenders, financial institutions and other third parties to release to Owner financial information requested by Owner, including, but not limited to, the financial information described in the preceding Section 13.7.1.

§ 13.8 Waiver of Jury Trial
All parties hereby waive any and all right to any trial by jury in any action or proceeding arising directly or indirectly hereunder.

ARTICLE 14 TERMINATION OR SUSPENSION OF THE CONTRACT

§ 14.1 Termination by the Contractor

§ 14.1.1 The Contractor may terminate the Contract if the Work is stopped for a period of 60 consecutive days through no act or fault of the Contractor, a Subcontractor, a Sub-subcontractor, their agents or employees, or any other persons or entities performing portions of the Work, for any of the following reasons:

- **.1** Issuance of an order of a court or other public authority having jurisdiction that requires all Work to be stopped;
- **.2** An act of government, such as a declaration of national emergency, that requires all Work to be stopped; or
- **.3** Because the Architect has not issued a Certificate for Payment and has not notified the Contractor of the reason for withholding certification as provided in Section 9.4.1, or because the Owner has not made payment on a Certificate for Payment within the time stated in the Contract Documents.~~; or~~
- ~~**.4** The Owner has failed to furnish to the Contractor reasonable evidence as required by Section 2.2.~~

§ 14.1.2 The Contractor may terminate the Contract if, through no act or fault of the Contractor, a Subcontractor, a Sub-subcontractor, their agents or employees, or any other persons or entities performing portions of the Work, repeated suspensions, delays, or interruptions of the entire Work by the Owner as described in Section 14.3, constitute in the aggregate more than 100 percent of the total number of days scheduled for completion, or 120 days in any 365-day period, whichever is less.

§ 14.1.3 If one of the reasons described in Section 14.1.1 or 14.1.2 exists, the Contractor may, upon seven days' notice to the Owner and Architect, terminate the Contract and recover from the Owner payment for Work executed, ~~as well as reasonable overhead and profit on Work not executed,~~ and costs incurred by reason of such termination excluding profit on unexecuted Work.

§ 14.1.4 If the Work is stopped for a period of 60 consecutive days through no act or fault of the Contractor, a Subcontractor, a Sub-subcontractor, or their agents or employees or any other persons or entities performing portions of the Work because the Owner has repeatedly failed to fulfill the Owner's obligations under the Contract Documents with respect to material matters important to the progress of the Work, the Contractor may, upon seven additional days' written notice to the Owner and the Architect, terminate the Contract and recover from the Owner as provided in Section 14.1.3.

§ 14.2 Termination by the Owner for Cause

§ 14.2.1 The Owner may terminate the Contract if the Contractor

- **.1** repeatedly refuses or fails to supply enough properly skilled workers or proper materials;
- **.2** fails to make payment to Subcontractors or suppliers in accordance with the respective agreements between the Contractor and the Subcontractors or suppliers;
- **.3** repeatedly disregards applicable laws, statutes, ordinances, codes, rules and regulations, or lawful orders of a public authority; ~~or~~
- **.4** otherwise is guilty of substantial breach of a provision of the Contract Documents; or
- **.5** is adjudged a bankrupt or insolvent, or if it makes a general assignment for the benefit of its creditors, or if a trustee or receiver is appointed for the Contractor or for any of its property, or if it files a petition to take advantage of any debtor's loss, or to reorganize under the bankruptcy or similar laws.

§ 14.2.2 When any of the reasons described in Section 14.2.1 exist, ~~and upon certification by the Architect that sufficient cause exists to justify such action,~~ the Owner may, without prejudice to any other rights or remedies of the Owner and after giving the Contractor and the Contractor's surety, if any, seven days' notice, terminate employment of the Contractor and may, subject to any prior rights of the surety:

- **.1** Exclude the Contractor from the site and take possession of all materials, equipment, tools, and construction equipment and machinery thereon owned by the Contractor;
- **.2** Accept assignment of subcontracts pursuant to Section 5.4; and

.3 Finish the Work by whatever reasonable method the Owner may deem expedient. Upon written request of the Contractor, the Owner shall furnish to the Contractor a detailed accounting of the costs incurred by the Owner in finishing the Work

§ 14.2.3 When the Owner terminates the Contract for one of the reasons stated in Section 14.2.1, the Contractor shall not be entitled to receive further payment until the Work is finished.

§ 14.2.4 If the unpaid balance of the Contract Sum exceeds costs of finishing the Work, including compensation for the Architect's services and expenses made necessary thereby, and other damages incurred by the Owner and not expressly waived, such excess shall be paid to the Contractor. If such costs and damages exceed the unpaid balance, the Contractor shall pay the difference to the Owner. The amount to be paid to the Contractor or Owner, as the case may be, shall be certified by the ~~Initial Decision Maker~~ Architect, upon application, and this obligation for payment shall survive termination of the Contract.

§ 14.3 Suspension by the Owner for Convenience

§ 14.3.1 The Owner may, without cause, order the Contractor in writing to suspend, delay or interrupt the Work, in whole or in part for such period of time as the Owner may determine.

§ 14.3.2 The Contract Sum and Contract Time shall be adjusted for increases in the direct cost and time caused by suspension, delay, or interruption under Section 14.3.1. Adjustment of the Contract Sum shall not include profit. No adjustment shall be made to the extent

.1 that performance is, was, or would have been, so suspended, delayed, or interrupted, by another cause for which the Contractor is responsible; or

.2 that an adjustment is made or denied under another provision of the Contract.

§ 14.4 Termination by the Owner for Convenience

§ 14.4.1 The Owner may, at any time, terminate the Contract for the Owner's convenience and without cause.

§ 14.4.2 Upon receipt of notice from the Owner of such termination for the Owner's convenience, the Contractor shall

.1 cease operations as directed by the Owner in the notice;

.2 take actions necessary, or that the Owner may direct, for the protection and preservation of the Work; and

.3 except for Work directed to be performed prior to the effective date of termination stated in the notice, terminate all existing subcontracts and purchase orders and enter into no further subcontracts and purchase orders.

§ 14.4.3 In case of such termination for the Owner's convenience, the Owner shall pay the Contractor for Work properly executed; costs incurred by reason of the termination, including costs attributable to termination of Subcontracts; ~~and the termination fee, if any, set forth in the Agreement~~ along with reasonable overhead and profit on the Work performed to date, but in no event shall the Contractor be entitled to anticipated profits on unperformed Work.

ARTICLE 15 CLAIMS AND DISPUTES

§ 15.1 Claims

§ 15.1.1 Definition

A Claim is a demand or assertion by one of the parties seeking, as a matter of right, payment of money, a change in the Contract Time, or other relief with respect to the terms of the Contract. The term "Claim" also includes other disputes and matters in question between the Owner and Contractor arising out of or relating to the Contract. The responsibility to substantiate Claims shall rest with the party making the Claim. This Section 15.1.1 does not require the Owner to file a Claim in order to impose liquidated damages in accordance with the Contract Documents.

§ 15.1.2 Time Limits on Claims

Any statutes of limitations shall commence to run, and all causes of action shall be deemed to have accrued, in accordance with applicable Florida law. ~~The Owner and Contractor shall commence all Claims and causes of action against the other and arising out of or related to the Contract, whether in contract, tort, breach of warranty or otherwise, in accordance with the requirements of the binding dispute resolution method selected in the Agreement and within the period specified by applicable law, but in any case not more than 10 years after the date of Substantial Completion of the~~

~~Work. The Owner and Contractor waive all Claims and causes of action not commenced in accordance with this Section 15.1.2.~~

§ 15.1.3 Notice of Claims

§ 15.1.3.1 Claims by either party must be made within 21 days after occurrence of the event giving rise to such Claim or within 21 days after the claimant first recognizes the condition giving rise to the Claim, whichever is later. Claims must be made by written notice to the Architect and the other party. Claims must specifically detail all facts and issues substantiating the Claim, including all costs and expenses incurred. Contractor Claims must be made in writing and timely filed in accordance with the specific requirements of the Contract Documents and under no circumstances whatsoever be based upon actual or verbal notice or lack of prejudice to the other party. An additional Contractor Claim after the initial Claim has been implemented by Change Order will not be considered unless submitted in a timely manner. ~~the Owner or Contractor, where the condition giving rise to the Claim is first discovered prior to expiration of the period for correction of the Work set forth in Section 12.2.2, shall be initiated by notice to the other party and to the Initial Decision Maker with a copy sent to the Architect, if the Architect is not serving as the Initial Decision Maker. Claims by either party under this Section 15.1.3.1 shall be initiated within 21 days after occurrence of the event giving rise to such Claim or within 21 days after the claimant first recognizes the condition giving rise to the Claim, whichever is later.~~

§ 15.1.3.2 Claims by either the Owner or Contractor, where the condition giving rise to the Claim is first discovered after expiration of the period for correction of the Work set forth in Section 12.2.2, shall be initiated by written notice to the other party. In such event, no decision by the ~~Initial Decision Maker~~ Architect is required.

§ 15.1.4 Continuing Contract Performance

§ 15.1.4.1 Pending final resolution of a Claim, except as otherwise agreed in writing or as provided in Section 9.7 and Article 14, the Contractor shall proceed diligently with performance of the Contract and the Owner shall continue to make payments in accordance with the Contract Documents.

§ 15.1.4.2 The Contract Sum and Contract Time shall be adjusted in accordance with the ~~Initial Decision Maker's~~ Architect's decision, subject to the right of either party to proceed in accordance with this Article 15. The Architect will issue Certificates for Payment accordingly ~~in accordance with the decision of the Initial Decision Maker~~.

§ 15.1.5 Claims for Additional Cost

If the Contractor wishes to make a Claim for an increase in the Contract Sum, notice as provided in Section 15.1.3 shall be given before proceeding to execute the portion of the Work that is the subject of the Claim. Prior notice is not required for Claims relating to an emergency endangering life or property arising under Section 10.4.

§ 15.1.5.1 If the Contractor believes additional cost is involved for reasons including but not limited to (1) a written interpretation from the Architect, (2) an order by the Owner to stop the Work where the Contractor was not at fault, (3) a written order for a minor change in the Work issued by the Architect, (4) failure of payment by the Owner, (5) termination of the Contract by the Owner, (6) Owner's suspension or (7) other reasonable grounds, Claim shall be filed in accordance with this Section 15.1.

§ 15.1.6 Claims for Additional Time

§ 15.1.6.1 If the Contractor wishes to make a Claim for an increase in the Contract Time, notice as provided in Section 15.1.3 shall be given. The Contractor's Claim shall include an estimate of cost and of probable effect of delay on progress of the Work. In the case of a continuing delay, only one Claim is necessary.

§ 15.1.6.2 If adverse weather conditions are the basis for a Claim for additional time, such Claim shall be documented by data substantiating that weather conditions were abnormal for the period of time, could not have been reasonably anticipated, and had an adverse effect on the scheduled construction.

§ 15.1.7 Waiver of Claims for Consequential Damages

The Contractor and Owner waive Claims against each other for consequential damages arising out of or relating to this Contract. This mutual waiver includes:

.1 damages incurred by the Owner for rental expenses, for losses of use, income, profit, financing, business and reputation, and for loss of management or employee productivity or of the services of such persons; and

.2 damages incurred by the Contractor for principal office expenses including the compensation of personnel stationed there, for losses of financing, business and reputation, and for loss of profit, except anticipated profit arising directly from the Work.

This mutual waiver is applicable, without limitation, to all consequential damages due to either party's termination in accordance with Article 14. Nothing contained in this Section 15.1.7 shall be deemed to preclude assessment of liquidated damages, when applicable, in accordance with the requirements of the Contract Documents.

§ 15.2 Initial Decision

§ 15.2.1 Decision of the Architect. Claims, including those alleging an error or omission by the Architect but excluding those arising under Section 10.3 shall be referred initially to the Architect for decision. An initial decision by the Architect shall be required as a condition precedent to mediation or litigation of all Claims between the Contractor and Owner arising prior to the date final payment is due, unless 30 days have passed after the Claim has been referred to the Architect with no decision having been rendered by the Architect. The Architect will not decide disputes between the Contractor and persons or entities other than the Owner. ~~Claims, excluding those where the condition giving rise to the Claim is first discovered after expiration of the period for correction of the Work set forth in Section 12.2.2 or arising under Sections 10.3, 10.4, and 11.5, shall be referred to the Initial Decision Maker for initial decision. The Architect will serve as the Initial Decision Maker, unless otherwise indicated in the Agreement. Except for those Claims excluded by this Section 15.2.1, an initial decision shall be required as a condition precedent to mediation of any Claim. If an initial decision has not been rendered within 30 days after the Claim has been referred to the Initial Decision Maker, the party asserting the Claim may demand mediation and binding dispute resolution without a decision having been rendered. Unless the Initial Decision Maker and all affected parties agree, the Initial Decision Maker will not decide disputes between the Contractor and persons or entities other than the Owner.~~

§ 15.2.2 The ~~Initial Decision Maker~~ Architect will review Claims and within ten days of the receipt of a Claim take one or more of the following actions: (1) request additional supporting data from the claimant or a response with supporting data from the other party, (2) reject the Claim in whole or in part, (3) approve the Claim, (4) suggest a compromise, or (5) advise the parties that the ~~Initial Decision Maker~~ Architect is unable to resolve the Claim if the ~~Initial Decision Maker~~ Architect lacks sufficient information to evaluate the merits of the Claim or if the ~~Initial Decision Maker~~ Architect concludes that, in the Architect's sole discretion, it would be inappropriate for the ~~Initial Decision Maker~~ Architect to resolve the Claim.

§ 15.2.3 In evaluating Claims, the ~~Initial Decision Maker~~ Architect may, but shall not be obligated to, consult with or seek information from either party or from persons with special knowledge or expertise who may assist the ~~Initial Decision Maker~~ Architect in rendering a decision. The ~~Initial Decision Maker~~ Architect may request the Owner to authorize retention of such persons at the Owner's expense.

§ 15.2.4 If the ~~Initial Decision Maker~~ Architect requests a party to provide a response to a Claim or to furnish additional supporting data, such party shall respond, within ten days after receipt of the request, and shall either (1) provide a response on the requested supporting data, (2) advise the ~~Initial Decision Maker~~ Architect when the response or supporting data will be furnished, or (3) advise the ~~Initial Decision Maker~~ Architect that no supporting data will be furnished. Upon receipt of the response or supporting data, if any, the ~~Initial Decision Maker~~ Architect will either reject or approve the Claim in whole or in part.

§ 15.2.5 The Architect will approve or reject Claims by written decision, which shall state the reasons therefore and which shall notify the parties of any change in the Contract Sum or Contract Time or both. The approval or rejection of a Claim by the Architect shall be final and binding on the parties but subject to mediation and litigation. ~~The Initial Decision Maker will render an initial decision approving or rejecting the Claim, or indicating that the Initial Decision Maker is unable to resolve the Claim. This initial decision shall (1) be in writing; (2) state the reasons therefor; and (3) notify the parties and the Architect, if the Architect is not serving as the Initial Decision Maker, of any change in the Contract Sum or Contract Time or both. The initial decision shall be final and binding on the parties but subject to mediation and, if the parties fail to resolve their dispute through mediation, to binding dispute resolution.~~

§ 15.2.6 ~~Either party may file for mediation of an initial decision at any time, subject to the terms of Section 15.2.6.1.~~

§ 15.2.6.1 ~~Either party may, within 30 days from the date of receipt of an initial decision, demand in writing that the other party file for mediation. If such a demand is made and the party receiving the demand fails to file for mediation within 30 days after receipt thereof, then both parties waive their rights to mediate or pursue binding dispute resolution proceedings with respect to the initial decision.~~

§ 15.2.7 In the event of a Claim against the Contractor, the Owner may, but is not obligated to, notify the surety, if any, of the nature and amount of the Claim. If the Claim relates to a possibility of a Contractor's default, the Owner may, but is not obligated to, notify the surety and request the surety's assistance in resolving the controversy.

§ 15.2.8 If a Claim relates to or is the subject of a mechanic's lien, the party asserting such Claim may proceed in accordance with applicable law to comply with the lien notice or filing deadlines.

§ 15.3 Mediation

§ 15.3.1 Claims, disputes, or other matters in controversy arising out of or related to the Contract~~, except those waived as provided for in Sections 9.10.4, 9.10.5 and 15.1.7,~~ shall be subject to mediation as a condition precedent to binding dispute resolution.

§ 15.3.2 Claims, disputes or other matters in question between the parties to this Agreement shall be first subject to pre-suit mediation prior to the filing of any legal claims or litigation. Completion of pre-suit mediation is a condition precedent to litigation. The obligation to mediate is a material and essential provision of the Agreement. ~~The parties shall endeavor to resolve their Claims by mediation which, unless the parties mutually agree otherwise, shall be administered by the American Arbitration Association in accordance with its Construction Industry Mediation Procedures in effect on the date of the Agreement. A request for mediation shall be made in writing, delivered to the other party to the Contract, and filed with the person or entity administering the mediation. The request may be made concurrently with the filing of binding dispute resolution proceedings but, in such event, mediation shall proceed in advance of binding dispute resolution proceedings, which shall be stayed pending mediation for a period of 60 days from the date of filing, unless stayed for a longer period by agreement of the parties or court order. If an arbitration is stayed pursuant to this Section 15.3.2, the parties may nonetheless proceed to the selection of the arbitrator(s) and agree upon a schedule for later proceedings.~~

§ 15.3.3 Either party may, within 30 days from the date that mediation has been concluded without resolution of the dispute or 60 days after mediation has been demanded without resolution of the dispute, demand in writing that the other party file for binding dispute resolution. If such a demand is made and the party receiving the demand fails to file for binding dispute resolution within 60 days after receipt thereof, then both parties waive their rights to binding dispute resolution proceedings with respect to the initial decision.

§ 15.3.4 Unless otherwise agreed in writing, the Contractor shall carry on the Work and maintain its progress during any mediation or litigation, and the Owner shall continue to make payments to the Contractor in accordance with the Contract Documents. ~~The parties shall share the mediator's fee and any filing fees equally. The mediation shall be held in the place where the Project is located, unless another location is mutually agreed upon. Agreements reached in mediation shall be enforceable as settlement agreements in any court having jurisdiction thereof.~~

§ 15.3.5 Either party may initiate a mediation preceding by a request in writing to the other party within a reasonable time after the claim, dispute or other matter in question has arisen or as provided in subparagraph 15.3.1, but in no event after the expiration of the applicable statute of limitations.

§ 15.3.6 The parties shall endeavor in good faith to mutually agree upon an acceptable mediator. In the event the parties have not agreed upon a mediator within thirty (30) days of the request for mediation, the Orlando office of the American Arbitration Association, upon the written request of either party, shall appoint a mediator from its pool of approved mediators.

DRAFT

§ 15.3.7 Unless otherwise mutually agreed, the mediation shall be held in accordance with the Construction Industry Mediation Rules of the American Arbitration Association currently in effect, each party to bear its own fees, costs and expenses.

§ 15.3.8 In the event that pre-suit mediation is unsuccessful, all claims, disputes or other matters in question shall be resolved in the Circuit Courts of Volusia County Florida. The Parties, including the Contractor's Surety, waive Venue and Jurisdiction of any Federal Court and expressly waive Trial by Jury.

§ 15.3.9 All references to Arbitration in the Contract Documents are deleted.

~~**§ 15.4 Arbitration**~~
~~**§ 15.4.1** If the parties have selected arbitration as the method for binding dispute resolution in the Agreement, any Claim subject to, but not resolved by, mediation shall be subject to arbitration which, unless the parties mutually agree otherwise, shall be administered by the American Arbitration Association in accordance with its Construction Industry Arbitration Rules in effect on the date of the Agreement. The Arbitration shall be conducted in the place where the Project is located, unless another location is mutually agreed upon. A demand for arbitration shall be made in writing, delivered to the other party to the Contract, and filed with the person or entity administering the arbitration. The party filing a notice of demand for arbitration must assert in the demand all Claims then known to that party on which arbitration is permitted to be demanded.~~

~~**§ 15.4.1.1** A demand for arbitration shall be made no earlier than concurrently with the filing of a request for mediation, but in no event shall it be made after the date when the institution of legal or equitable proceedings based on the Claim would be barred by the applicable statute of limitations. For statute of limitations purposes, receipt of a written demand for arbitration by the person or entity administering the arbitration shall constitute the institution of legal or equitable proceedings based on the Claim.~~

~~**§ 15.4.2** The award rendered by the arbitrator or arbitrators shall be final, and judgment may be entered upon it in accordance with applicable law in any court having jurisdiction thereof.~~

~~**§ 15.4.3** The foregoing agreement to arbitrate and other agreements to arbitrate with an additional person or entity duly consented to by parties to the Agreement, shall be specifically enforceable under applicable law in any court having jurisdiction thereof.~~

~~**§ 15.4.4 Consolidation or Joinder**~~
~~**§ 15.4.4.1** Subject to the rules of the American Arbitration Association or other applicable arbitration rules, either party may consolidate an arbitration conducted under this Agreement with any other arbitration to which it is a party provided that (1) the arbitration agreement governing the other arbitration permits consolidation, (2) the arbitrations to be consolidated substantially involve common questions of law or fact, and (3) the arbitrations employ materially similar procedural rules and methods for selecting arbitrator(s).~~

~~**§ 15.4.4.2** Subject to the rules of the American Arbitration Association or other applicable arbitration rules, either party may include by joinder persons or entities substantially involved in a common question of law or fact whose presence is required if complete relief is to be accorded in arbitration, provided that the party sought to be joined consents in writing to such joinder. Consent to arbitration involving an additional person or entity shall not constitute consent to arbitration of any claim, dispute or other matter in question not described in the written consent.~~

~~**§ 15.4.4.3** The Owner and Contractor grant to any person or entity made a party to an arbitration conducted under this Section 15.4, whether by joinder or consolidation, the same rights of joinder and consolidation as those of the Owner and Contractor under this Agreement.~~

DRAFT

SECTION 010100 – SUMMARY OF WORK

PART 1 - GENERAL

1.1 GENERAL PROVISIONS

A. Attention is directed to the CONTRACT AND GENERAL CONDITIONS, which are hereby made a part of this Section of the Specifications.

1.2 RELATED SECTIONS

A. Section 01 3114 – Conduct of the Work

B. Section 02 2113 – Existing Conditions

1.3 GENERAL SCOPE OF WORK

A. The Basketball Courts Renovation Project at Blue Lake Elementary School shall include:
   1. The resurfacing of the existing asphalt and a new resilient court surface.
   2. The restoration of any items damaged or destroyed by encroaching upon areas outside the Project Site.
   3. All other work indicated on the contract plans and/or specifications.

1.4 TIME OF COMPLETION

A. Start Construction – T.B.D.

B. Substantial Completion of Court Reconstruction – 60 Days from Start of Construction.

C. Final Completion of Court Reconstruction – T.B.D.

D. Prior to construction, the Contractor shall provide a detailed Gantt Chart schedule noting the start and end date of each task to be completed. The schedule shall include submission dates for key product submittals.

1.5 TESTING

A. The Contractor will retain and pay for the services of a certified independent testing laboratory in good standing to perform inspections, tests and other services required by the Specification including the expense of all failed tests, including retests as required to obtain approval. Contractor shall submit testing lab certifications and qualifications to the

Owner for approval. However, the Owner shall pay for testing of concrete. The Contractor shall coordinate and schedule concrete testing.

1.6 MEETINGS

A. A competent representative of the Contractor who is familiar with the site and progress of the work is required to attend weekly jobsite meeting during the period of construction.

PART 2 - PRODUCTS (Not Used)

PART 3 - EXECUTION (Not Used)

END OF SECTION

VOLUSIA COUNTY SCHOOLS

THE SCHOOL BOARD OF VOLUSIA COUNTY FLORIDA
200 North Clara Avenue
Deland, Florida 32720

BLUE LAKE ELEMENTARY SCHOOL RENOVATE BASKETBALL COURT VCS Project NO. 2548107

282 BLUE LAKE AVE
DELAND, FL 32724

SCHOOL BOARD MEMBERS

JAMIE HAYNES	BOARD CHAIR
RUBEN COLON	BOARD VICECHAIR
DONNA BROSEMER	MEMBER
KRISTA GOODRICH	MEMBER
JESSIE THOMPSON	MEMBER
CARMEN J. BALGOBIN	SUPERINTENDENT

DESCRIPTION OF WORK

THE GENERAL SCOPE OF WORK FOR THIS PROJECT INCLUDES THE RESURFACING OF THE EXISTING BASKETBALL COURTS AT BLUE LAKE ELEMENTARY SCHOOL LOCATED AT DELAND, FL.

Architect's Statement of Compliance
To the best of my knowledge, these drawings and the project manual are complete and comply with the Florida Building Code.

BUILDING DATA

A.	SURVEY PARCEL ID	N/A
B.	LEGAL DESCRIPTION	N/A
C.	OCCUPANCY TYPE	N/A
D.	CONSTRUCTION TYPE	N/A
E.	RISK CATEGORY	N/A
F.	AUTOMATIC SPRINKLER	N/A
G.	BUILDING AREA	N/A
H.	BUILDING HEIGHT	N/A
I.	OCCUPANT LOAD	N/A

LOCATION MAP

ENGINEERS & CONSULTANTS

ENGINEER OF RECORD
GALE ASSOCIATES, INC.
217 N. WESTMONTE DRIVE SUITE 3033
ALTAMONTE SPRINGS, FL 32714
407-599-7031
PROJECT MANAGER: PETER SPANOS
PS@GAINC.COM
WWW.GALEASSOCIATES.ORG

INDEX OF DRAWINGS

CIVIL

G001 COVER SHEET 2
G002 NOTES AND LEGENDS SHEET
C001 EVALUATION PLAN
~~C002A EROSION CONTROL AND DEMOLITION PLAN A~~ 2
~~C002B EROSION CONTROL AND DEMOLITION PLAN B (ALTERNATE 1)~~
C101~~A~~ LAYOUT AND MATERIALS PLAN ~~A~~
~~C101B LAYOUT AND MATERIALS PLAN B (ALTERNATE 1)~~
C501 DETAIL SHEET 1
C502 DETAIL SHEET 2
C503 DETAIL SHEET 3

CONSTRUCTION DOCUMENTS 02/10/2025

Gale Associates, Inc.
Engineers and Planners
217 N. WESTMONTE DRIVE | SUITE 3033|
ALTAMONTE SPRINGS, FL 32714
P 407.599.7031 | F 407.599.7077
www.gainc.com
Boston Baltimore Orlando Hartford Bedford

This drawing and the design and construction features disclosed are proprietary to Gale Associates, Inc. and shall not be altered or reused in whole or part without the express written permission of Gale Associates, Inc.
Copyright©2025

REVISIONS
DOCUMENT HISTORY

NO.	DATE	DESCRIPTION
1	5/02/25	ADDENDUM 1
2	9/19/25	ADDENDUM 2

BLUE LAKE ELEMENTARY SCHOOL
RENOVATE BASKETBALL COURT
VCS Project NO. 2548107
282 BLUE LAKE AVE
DELAND, FL 32724

ARCHENGR OF RECORD
ENGINEER OF RECORD
PETER SPANOS, P.E.

DESIGNED BY	DRAWN BY
CLH/TMB	TMB
ISSUE DATE	AE PROJECT NUMBER
02/10/2025	678414

2
SHEET TITLE
COVER SHEET
DRAWING NO.
G001

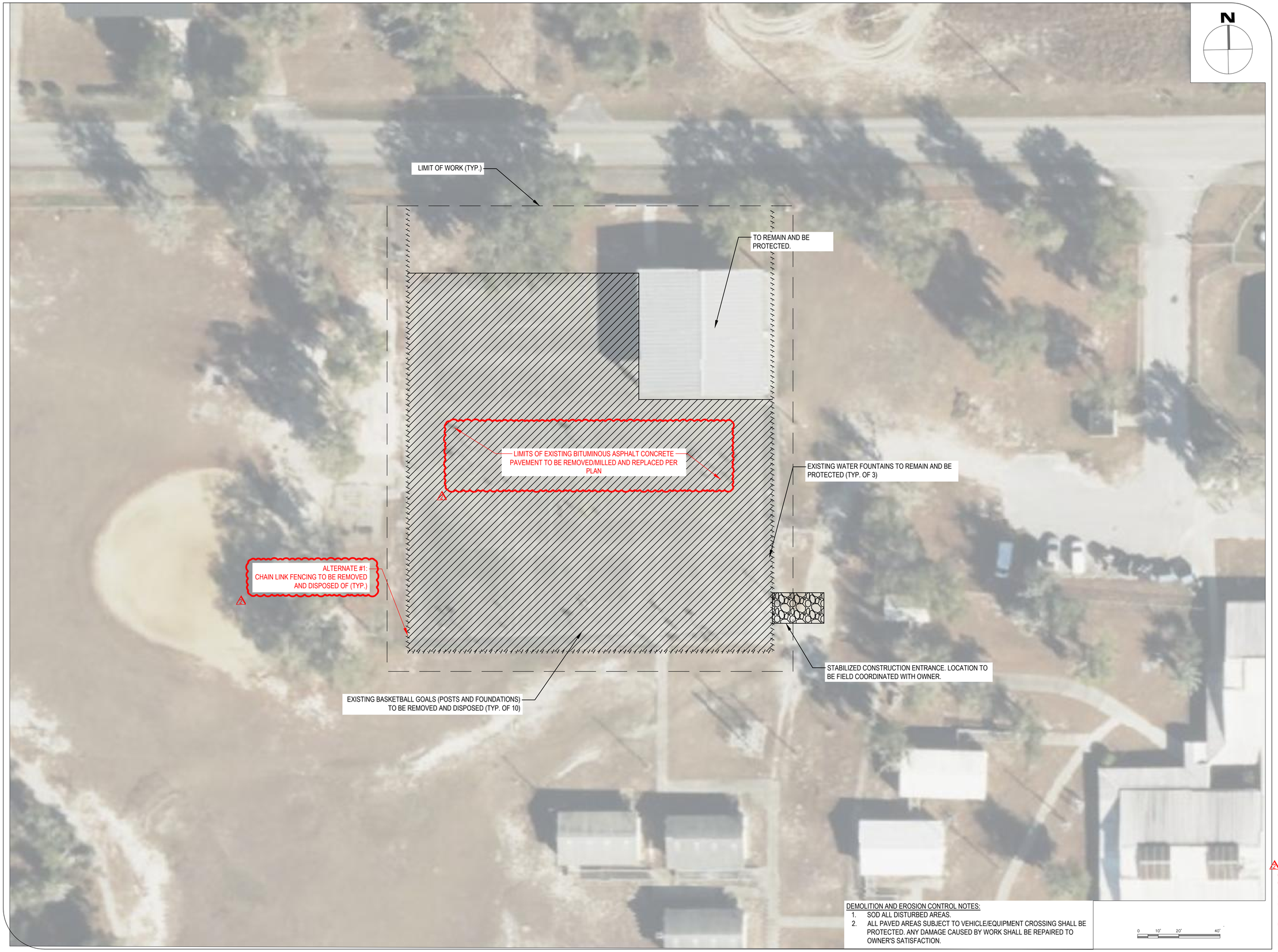

DEMOLITION AND EROSION CONTROL NOTES:

1. SOD ALL DISTURBED AREAS.
2. ALL PAVED AREAS SUBJECT TO VEHICLE/EQUIPMENT CROSSING SHALL BE PROTECTED. ANY DAMAGE CAUSED BY WORK SHALL BE REPAIRED TO OWNER'S SATISFACTION.

GALE

Gale Associates, Inc.
Engineers and Planners

217 N. WESTMONTE DRIVE | SUITE 3033|
ALTAMONTE SPRINGS, FL 32714
P 407.599.7031 | F 407.599.7077
www.gainc.com

Boston Baltimore Orlando Hartford Bedford

This drawing and the design and construction features disclosed are proprietary to Gale Associates, Inc. and shall not be altered or reused in whole or part without the express written permission of Gale Associates, Inc.
Copyright©2025

REVISIONS

DOCUMENT HISTORY

NO.	DATE	DESCRIPTION
1	5/02/25	ADDENDUM 1
2	9/19/25	ADDENDUM 2

BLUE LAKE ELEMENTARY SCHOOL
RENOVATE BASKETBALL COURT
VCS Project NO. 2548107
282 BLUE LAKE AVE
DELAND, FL 32724

ARCHENGR OF RECORD
ENGINEER OF RECORD
PETER SPANOS, P.E.

DESIGNED BY	DRAWN BY
CLH/TMB	TMB
ISSUE DATE	AE PROJECT NUMBER
02/10/2025	678414

SHEET TITLE
DEMOLITION AND EROSION CONTROL PLAN

DRAWING NO.
C002

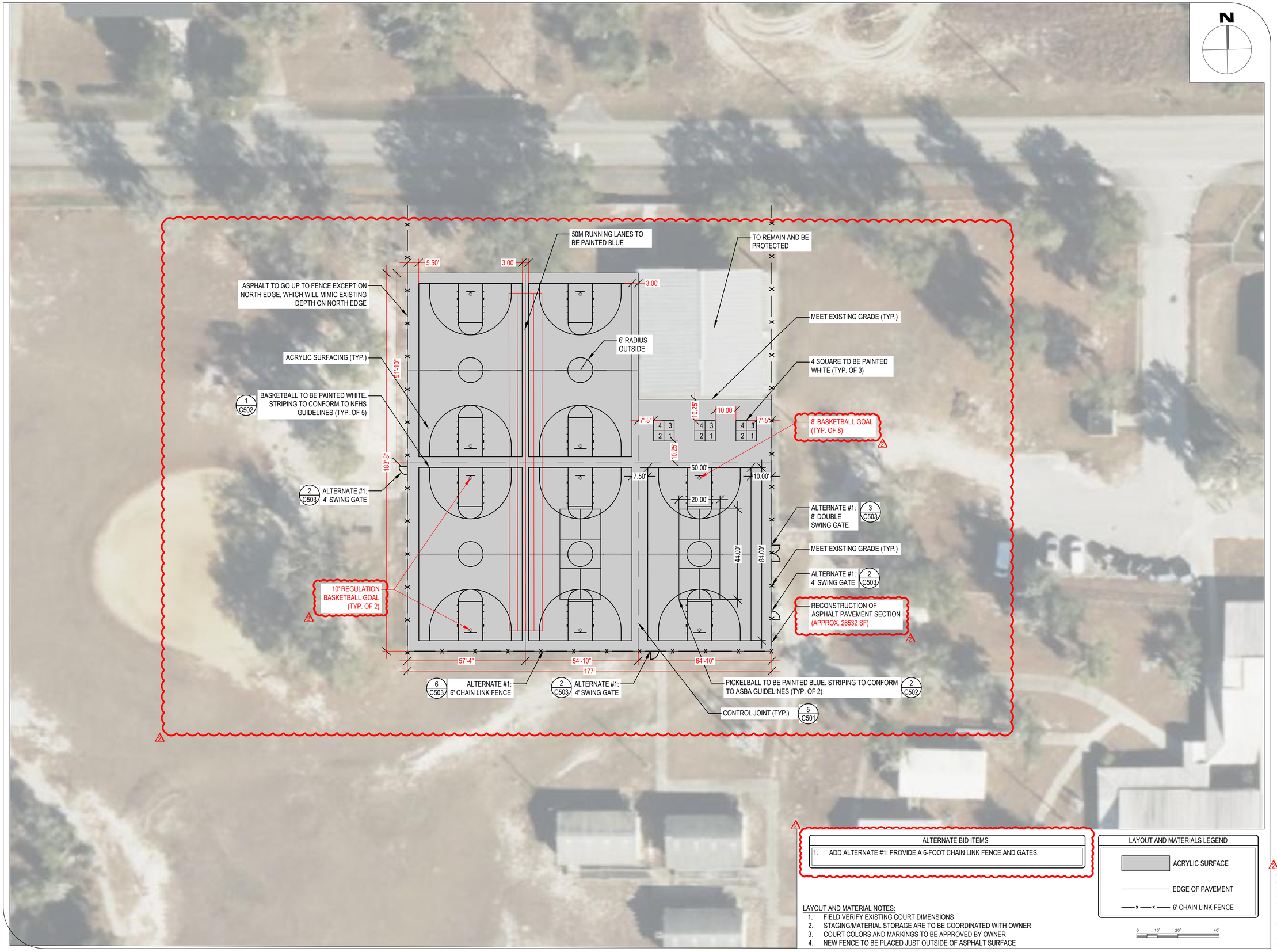

ALTERNATE BID ITEMS
1. ADD ALTERNATE #1: PROVIDE A 6-FOOT CHAIN LINK FENCE AND GATES.

LAYOUT AND MATERIALS LEGEND

- ACRYLIC SURFACE
- EDGE OF PAVEMENT
- 6' CHAIN LINK FENCE

0 10' 20' 40'

LAYOUT AND MATERIAL NOTES:

1. FIELD VERIFY EXISTING COURT DIMENSIONS
2. STAGING/MATERIAL STORAGE ARE TO BE COORDINATED WITH OWNER
3. COURT COLORS AND MARKINGS TO BE APPROVED BY OWNER
4. NEW FENCE TO BE PLACED JUST OUTSIDE OF ASPHALT SURFACE

GALE

Gale Associates, Inc.
Engineers and Planners

217 N. WESTMONTE DRIVE | SUITE 3033|
ALTAMONTE SPRINGS, FL 32714
P 407.599.7031 | F 407.599.7077
www.gainc.com

Boston Baltimore Orlando Hartford Bedford

This drawing and the design and construction features disclosed are proprietary to Gale Associates, Inc. and shall not be altered or reused in whole or part without the express written permission of Gale Associates, Inc.
Copyright©2025

REVISIONS

DOCUMENT HISTORY

NO.	DATE	DESCRIPTION
1	5/02/25	ADDENDUM 1
2	9/19/25	ADDENDUM 2

BLUE LAKE ELEMENTARY SCHOOL RENOVATE BASKETBALL COURT VCS Project NO. 2548107

282 BLUE LAKE AVE
DELAND, FL 32724

ARCHENGR OF RECORD
ENGINEER OF RECORD
PETER SPANOS, P.E.

DESIGNED BY	DRAWN BY
CLH/TMB	TMB
ISSUE DATE: 02/10/2025	AE PROJECT NUMBER: 678414

SHEET TITLE
LAYOUT AND MATERIALS PLAN

DRAWING NO.
C101

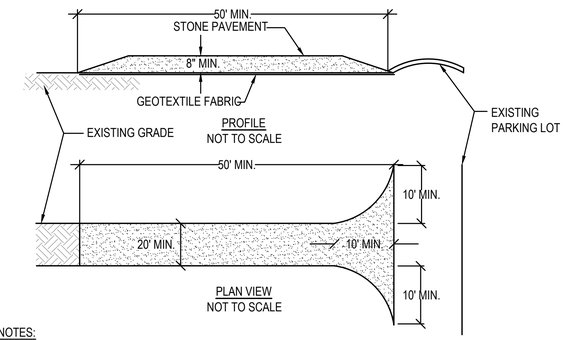

NOTES:

1. STONE SIZE - USE 2" STONE, OR RECLAIMED OR RECYCLED CONCRETE EQUIVALENT.
2. LENGTH - NOT LESS THAN 40 FEET.
3. THICKNESS - NOT LESS THAN (8) INCHES.
4. WIDTH - TWENTY (20) MINIMUM. BUT NOT LESS THAN THE FULL WIDTH AT POINTS WHERE INGRESS OR EGRESS OCCURS. TWENTY-FOUR (24) FOOT IF SINGLE ENTRANCE TO SITE.
5. GEOTEXTILE FABRIC - WILL BE PLACED OVER THE ENTIRE AREA PRIOR TO PLACING OF STONE. GEOTEXTILE FABRIC SHALL BE MIRIFI 500X WOVEN FABRIC OR APPROVED EQUAL.
6. SURFACE WATER - ALL SURFACE WATER FLOWING OR DIVERTED TOWARD CONSTRUCTION ENTRANCES SHALL BE PIPED ACROSS THE ENTRANCE. IF PIPING IS IMPRACTICAL, A MOUNTABLE BERM WITH 5:1 SLOPES WILL BE PERMITTED.
7. MAINTENANCE - THE ENTRANCE SHALL BE MAINTAINED IN A CONDITION WHICH WILL PREVENT TRACKING OR FLOWING OF SEDIMENT ONTO PUBLIC RIGHTS-OF-WAY. ALL SEDIMENT SPILLED. DROPPED, WASHED OR TRACKED ONTO PUBLIC RIGHTS-OF-WAY MUST BE REMOVED IMMEDIATELY.
8. WHEN WASHING IS REQUIRED. IT SHALL BE DONE ON AN AREA STABILIZED WITH STONE AND WHICH DRAINS INTO AN APPROVED SEDIMENT TRAPPING DEVICE.
9. PERIODIC INSPECTION AND NEEDED MAINTENANCE SHALL BE PROVIDED AFTER EACH RAIN.

1 STABILIZED CONSTRUCTION ENTRANCE

N.T.S.

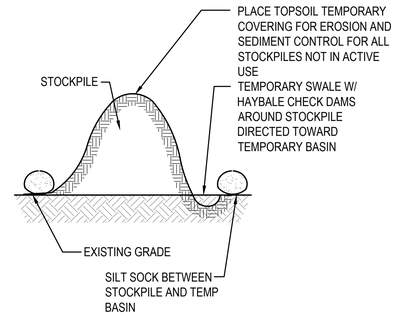

2 MATERIAL STOCKPILE AREA

N.T.S.

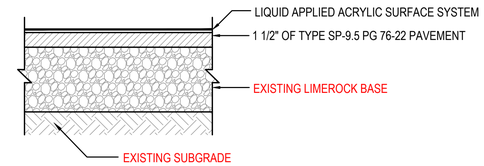

NOTE:
1. COURT BITUMINOUS CONCRETE SHALL CONTAIN 0% RECYCLED ASPHALT AND 0% RECYCLED SHINGLES.

3 COURT SECTION

N.T.S.

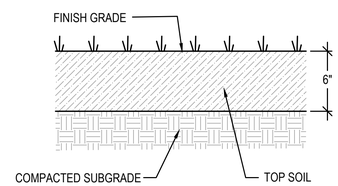

4 LOAM & SEED

N.T.S.

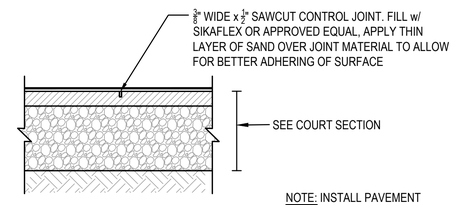

NOTE: INSTALL PAVEMENT CONTROL JOINT BETWEEN EACH COURT AND ALONG NET LINE.

5 PAVEMENT CONTROL JOINT

N.T.S.

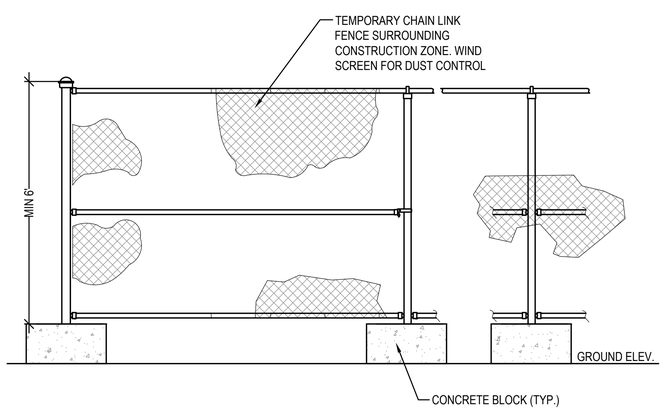

6 TEMPORARY CONSTRUCTION FENCE

N.T.S.

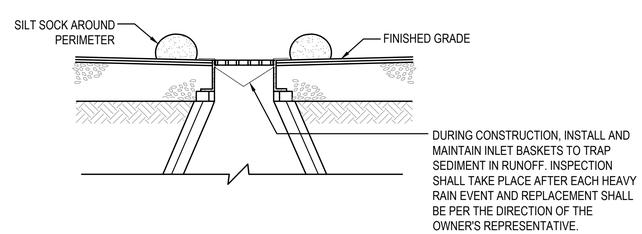

7 INLET PROTECTION / SILT SACK

N.T.S.

RESERVED FOR FUTURE USE

GALE

Gale Associates, Inc.
Engineers and Planners

217 N. WESTMONTE DRIVE | SUITE 3033|
ALTAMONTE SPRINGS, FL 32714
P 407.599.7031 | F 407.599.7077
www.gainc.com

Boston Baltimore Orlando Hartford Bedford

This drawing and the design and construction features disclosed are proprietary to Gale Associates, Inc. and shall not be altered or reused in whole or part without the express written permission of Gale Associates, Inc.
Copyright©2025

REVISIONS

DOCUMENT HISTORY

NO.	DATE	DESCRIPTION
1	9/19/25	ADDENDUM 2

BLUE LAKE ELEMENTARY SCHOOL
RENOVATE BASKETBALL COURT
VCS Project NO. 2548107
282 BLUE LAKE AVE
DELAND, FL 32724

ARCHENGR OF RECORD
ENGINEER OF RECORD
PETER SPANOS, P.E.

DESIGNED BY	DRAWN BY
CLH/TMB	TMB
ISSUE DATE	AE PROJECT NUMBER
02/10/2025	678414

SHEET TITLE
DETAIL SHEET 1

DRAWING NO.
C501