ADDENDUM # 04

Project: Mt Diablo Unified School District
Rio Vista Elementary, Mt Diablo Elementary & Meadow Homes Elementary
Acoustic Ceiling Tiles and Shade Coverings
19six #: 23118, 23119, & 23120

Bid #: 1962
Date: August 29, 2025

To all bidders submitting proposals for the above captioned project. This Addendum is hereby included in the Contract Documents to the same extent as though it were originally included therein. The following items modify, add to, delete from, or explain the drawings and/or specifications. The contents of this Addendum shall take precedence over the original specifications and plans.

BID DEADLINE:

The bid time shall not change.

Clarification #1: **Attached data (for Flexshade Systems) includes product description, specifications, drawings, photographs, and performance and test data adequate for evaluation of the request; applicable portions of the data are cleary identified. Attached data also includes a description of changes to the Cont[r]act Documents that the proposed substitution will require for its proper installation** Please see the attached substitution request form, the substitute product is an acceptable alternative.

ATTACHMENTS:

Draper Substitution Request

DRAPER
FOCUSED ON INNOVATIVE SOLUTIONS

Prior Approval Request

Project : MDUSD Acoustical Ceiling Tile and Shade Coverings Project

Prepared By: August Jaye Construction

Date: 8/4/2025

Architect Name: 19six

A/E Project Number: 000

Re: Product equal in quality and performance

Specification Title: Roller Window Shades

Description: Window Roller Shades

Section: 12-24-00 **Page:** All **Article/Paragraph:** All

Proposed Substitution: Draper Inc as approved equal manufacturer

Manufacturer: Draper Inc **Address:** 411 S. Pearl St. Spiceland, IN. 47385 **Phone:** 765-987-7999

Trade Name: Flexshade Systems

Attached data includes product description, specifications,drawings,photographs, and performance and test data adequate for evaluation of the request; applicable portions of the data are clearly identified.

Attached data also includes a description of changes to the Contact Documents that the proposed substitution will require for its proper installation.

The Undersigned Certifies

- Proposed substitution has been fully investigated and determined to be equal or superior in all respects to specified product.
- Same warranty will be furnished for proposed substitution as for specified product.
- Same maintenance service and source of replacement parts, as applicable, is available.
- Proposed substitution will have no adverse effect on the other trades and will not affect or delay progress schedule.
- Proposed substitution does not affect dimensions and fucnctional clearences.
- Payment will be made for chages to building design, including A/E designs, detailing, and construction costs caused by the substitution.

Submitted by: August Jaye Construction

Address: PO Box 1495, Rohnert Park, CA 94927

Phone: 7077660927

Signature: Vicky Prior **Date:** 8.5.2025

A/E's REVIEW AND ACTION

- [x] Substitution approved - Make submittals in accordance with Specification Section 01330.
- [ ] Substitution approved as noted - Make submittals in accordance with Specification Section 01330.
- [ ] Substitution rejected - Use specified materials.
- [ ] Substitution request recieved to late - Use specified materials.

Signature: **Date:** 8/29/2025

Supporting Data Attached: ☐ Drawings ☐ Product Data ☐ Samples ☐ Tests ☐ Reports

DRAPER®
FOCUSED ON INNOVATIVE SOLUTIONS

LIMITED WARRANTY AND RETURN POLICY

YOUR PURCHASE IS COVERED

Draper® quality is unmatched.

We're so sure that your window shades will look great and work well (and continue to do so) that we are offering a 25-year limited warranty on most interior shade products.

We just don't think you'll need it.

Draper, Inc. warrants that its products are free from defects in material and workmanship for the following specified warranty periods:

For Draper shading products installed indoors:

- 25 years for most Draper FlexShade® and FlexStyle™ interior window shade hardware and fabrics (excluding PVC-free fabrics, clear vinyl, insect screens and the spring assist mechanism).
- 10 years for the Draper Techmatic, the Draper Spring Roller Window Shade, Draper FlexShade® ZIP, FlexShade® ZIP XL, Skylight FlexShade®, LightBloc FlexShade®, FlexShade® XL, Bottom-Up FlexShade®, and Gabled Bottom-Up FlexShade® hardware and fabrics (excluding PVC-free fabrics, clear vinyl and insect screens), and the spring assist mechanism used in any Draper window treatment product.
- 5 years for electronic accessories and motors for the above products, and all PVC-free fabrics and insect screens (excluding clear vinyl).
- 1 year for the Draper Custom Tension System, the Draper FlexLouver™ Rack Arm System and shading products from global partners and distributed by Draper.

For Draper shading products installed outdoors:

- 10 years on hardware for most Draper Exterior FlexShade models and Draper FlexShade ZIP and FlexShade ZIP XL.
- 5 years on electronic accessories and motors, fabric and insect screens (excluding clear vinyl) and hardware finish.
- 1 year for the Draper Custom Tension System, the Draper FlexLouver Rack Arm System and shading products from global partners and distributed by Draper.

For more details, please contact Draper or visit our website at
www.draperinc.com/warranty.aspx | 765.987.7999 | 800.238.7999

LIMITED WARRANTY AND RETURN POLICY

Limited Warranty

Draper, Inc. (**"Draper"**) warrants (this **"Limited Warranty"**) to the End User (the **"End User"**) that its products are free from defects in material and workmanship (except as provided below) for the specified warranty periods (each, a **"Warranty Period"**) provided below, which Warranty Periods begin on the date of shipment. This Limited Warranty is limited to the project for which the product was originally purchased.

For Draper® window treatment products **installed indoors** and incorporating fabric specified in the bullets below:

- **25 years** for the mounting hardware, headbox, clutch, fascia and shade fabric (excluding PVC-free fabrics, fabric with battens, clear vinyl and insect screens) for the Draper Manual FlexShade® product line, the Draper Motorized FlexShade® product line, the Draper FlexShade® 2 product line, the Draper Crank Operated FlexShade®, the Draper FlexShade® NEXD, FlexShade® Twin Pull, Draper FlexShade® Recharge, the Draper Colossal FlexShade®, and the Draper FlexStyle™ product line,

- **10 years** for the mounting hardware, headbox, clutch, fascia and shade fabric (excluding PVC-free fabrics, fabric with battens, clear vinyl, and insect screens) for the Draper Techmatic, Draper Spring Roller Window Shade, Draper FlexShade® ZIP, Draper FlexShade® ZIP XL, the Draper Skylight FlexShade® product line (standard and 2), the Draper Manual LightBloc FlexShade®, the Draper Motorized LightBloc FlexShade®, the Draper FlexShade® XL, the Draper Bottom-Up FlexShade®, and Gabled Bottom-Up FlexShade® product lines,

- **5 years** for the controls, electronic accessories and motors for the above products,

- **5 years** for PVC-free fabrics, insect screens, and fabric with battens (excluding clear vinyl) for the Draper Manual FlexShade product line, the Draper Motorized FlexShade product line, the Draper FlexShade 2 product line, the Draper Manual LightBloc FlexShade, the Draper Motorized LightBloc FlexShade, the Draper Skylight FlexShade product line (standard, 2, and 3), the Draper Crank Operated FlexShade, the Draper FlexShade NEXD, the Draper Bottom-Up FlexShade product line, the Draper Techmatic Window Shade, the Draper Spring Roller Window Shade and the Draper Colossal FlexShade, and

- **1 year** for the Draper Custom Tension System.

For Draper window treatment products **installed indoors** and **not** incorporating fabrics specified in the above section:

- **1 year** for the Draper FlexLouver Rack Arm System.

- **1 year** for interior products distributed, not manufactured, by Draper.

For the Draper **Spring Assist** mechanism:

- **10 years** for the spring assist mechanism used in any Draper window treatment product, including, but not limited to, the Draper Bottom-Up FlexShade product line, the Draper Manual FlexShade and the Draper Manual FlexShade NEXD.

For Draper window treatment products **installed outdoors**:

- **10 years** for the mounting hardware, headbox, clutch, and fascia for the Draper Exterior FlexShade product line, Draper FlexShade ZIP, Draper FlexShade ZIP XL and
- **5 years** for the mounting hardware, headbox, clutch, fascia, shade fabric (excluding clear vinyl), insect screens, controls, electronic accessories, hardware finish, and the Draper Custom Tension System
- **1 year** for exterior products distributed, not manufactured, by Draper.

This Limited Warranty extends to the original End User, and automatically to any successor owner or transferee of the End User provided that the product remains in the location of its original installation. This Limited Warranty is applicable to products that are repaired or replaced for the balance of the Warranty Period or for ninety (90) days from the date the product is repaired or replaced, whichever is longer.

If a product breaches this Limited Warranty, the End User may make a claim on this Limited Warranty in accordance with the Claims Procedures, as set forth below, within a reasonable time after the End User discovers the defect. Subject to the conditions and limitations set forth below (the **"Excluded Items"**), Draper, through a Draper Authorized Dealer (a **"Dealer"**) will, at its discretion, either repair or replace any part of the product that proves defective by reason of improper workmanship or materials.

No person, including any sales representative or other employee or agent of Draper, has the authority to (a) bind Draper to any warranty, representation or remedy except those expressly set forth herein or (b) modify, change, vary or increase this warranty or any remedy set forth herein.

TOTAL LIABILITY OF DRAPER UNDER THIS OR ANY OTHER WARRANTY, EXPRESS OR IMPLIED, IS LIMITED TO REPAIR, REPLACEMENT OR REFUND. REPAIR, REPLACEMENT OR REFUND ARE THE SOLE AND EXCLUSIVE REMEDIES FOR BREACH OF WARRANTY OR ANY OTHER LEGAL THEORY. IN NO EVENT SHALL DRAPER BE LIABLE FOR ANY BACK CHARGES OR FOR ANY INCIDENTAL, INDIRECT, CONSEQUENTIAL, SPECIAL, EXEMPLARY OR PUNITIVE DAMAGES, WHETHER RESULTING FROM THE PURCHASE, USE, MISUSE, INABILITY TO USE OR INABILITY TO INSTALL THE PRODUCT OR FROM DEFECTS IN THE PRODUCT.

SOME STATES DO NOT ALLOW THE EXCLUSION OR LIMITATION OF INCIDENTAL OR CONSEQUENTIAL DAMAGES, SO THE ABOVE LIMITATION OR EXCLUSION MAY NOT APPLY.

THIS LIMITED WARRANTY IS THE EXCLUSIVE WARRANTY GIVEN BY DRAPER FOR THE PRODUCT AND IS IN LIEU OF ALL OTHER WARRANTIES. DRAPER DISCLAIMS ALL OTHER WARRANTIES, WHETHER EXPRESS, IMPLIED OR STATUTORY, INCLUDING ANY WARRANTY OF MERCHANTABILITY, ANY WARRANTY OF FITNESS FOR A PARTICULAR PURPOSE AND ANY IMPLIED WARRANTIES ARISING FROM A COURSE OF DEALING OR USAGE OF TRADE. THIS WARRANTY SUPERSEDES ALL OTHER WARRANTIES, INCLUDING ANY WARRANTIES BASED ON ORAL REPRESENTATIONS.

THIS LIMITED WARRANTY GIVES THE END USER SPECIFIC LEGAL RIGHTS, AND THE END USER MAY HAVE. OTHER RIGHTS WHICH VARY FROM STATE TO STATE.

Excluded Items

THIS LIMITED WARRANTY DOES NOT COVER DEFECTS CAUSED BY negligence; improper maintenance; improper storage; improper wiring; accident; misuse; installation not in accordance with printed installation instructions from Draper; abuse; impact or other force, whether prior or subsequent to installation; operation in a manner contrary to design or use in a manner contrary to or in excess of specifications, drawings or instruction of Draper; application other than intended use; use with electrical accessories or parts, including switches, relays or other accessory components not previously approved in writing by Draper; failure to comply with all written instructions and specifications from Draper; improper cleaning, maintenance, care or repair; normal wear and tear; fire, lightning, tornadoes or other acts of God; excessive electrical supply; contact with food; abnormal mechanical or environmental conditions; unauthorized disassembly, repair or modification; service by unauthorized provider; installation of unapproved third party products; buyer's remorse. This Warranty also does not apply to any product on which the original identification information has been altered, obliterated or removed, or which has been sold as second-hand.

IN ADDITION, WITH RESPECT TO THE DRAPER INTERIOR LINE OF FLEXSHADE PRODUCTS, THIS LIMITED WARRANTY DOES NOT COVER DEFECTS CAUSED BY use for non-interior applications or exposure to outdoor environmental conditions; contact with liquid, water, rain, extreme humidity or heavy perspiration, sand, dirt or the like or extreme heat.

This Warranty does not apply to any defects or damage caused by, arising out of or related to the installation of the product. Because Draper is not responsible or liable for the installation of the product, the End User should contact the Dealer from which the End User originally purchased the product in the event of a claim related to installation.

Draper does not warrant any images or artwork reproduced, printed or placed on shade cloth by Draper or any other imaging supplier. Draper is not responsible or liable for fading, discoloration, color shifts or any other failure or defect in such images or artwork.

Draper does not warrant bead chains on any of its products.

Draper does not warrant against freight damage, concealed or otherwise.

Claims Procedure

To make a valid and proper claim under this Limited Warranty, the End User **must notify the Dealer from which it purchased the product within the applicable Warranty Period**. The Dealer will then work directly with Draper to process the warranty claim. Draper will take those steps it determines to be reasonable and necessary, including inspection of the product, to determine whether the product is defective by reason of improper workmanship or materials. If, in its sole discretion, Draper determines that the product is defective by reason of improper workman-ship or materials, Draper will replace or repair the product. **The End User shall not return the product unless requested to do so by the Dealer and/or Draper.**

Governing Law; Dispute Resolution

This Limited Warranty and the rights contemplated hereby shall be governed by and interpreted in accordance with the laws of the State of Indiana, without regard to its choice or conflict of law principles. Any legal action arising under or relating to Limited Warranty shall be settled by binding arbitration in the State of Indiana, unless otherwise agreed by Draper and the warranty holder. The arbitration shall be conducted on a confidential basis pursuant to the Commercial Arbitration Rules of the American Arbitration Association. Any decision or award as a result of any such arbitration proceeding shall be in writing and shall provide an explanation for all conclusions of law and fact and shall include the assessment of costs and expenses but not attorneys' fees. Each party shall bear its own attorneys' fees in connection with any such arbitration. Any such arbitration shall be conducted by an arbitrator experienced in window treatments or with legal experience required for such arbitration and shall include a written record of the arbitration hearing. The parties reserve the right to object to any individual who shall be employed by or affiliated with a competing organization or entity. An award of arbitration may be enforced by a court of competent jurisdiction. All arbitration costs shall be shared by the parties unless otherwise ordered by the arbitrator.

Effective Date; Amendment

This Limited Warranty shall be effective as of January 16, 2023 and shall only apply to products purchased on or after such date.

Draper reserves the right to amend, modify or withdraw this Limited Warranty or any provisions herein at any time without notice to any party. Any such amendment, modification or withdrawal will not affect any product purchased prior to the date of such amendment, modification or withdrawal.

ACHIEVE YOUR VISION WITH DRAPER®



SHADING SOLUTIONS to achieve your vision.

Draper® **interior and exterior shading** solutions are **made in USA** with American and global components, to fit any need.

Our Spiceland, Indiana manufacturing facility includes an **on-site metal shop, powder coating facility, print room, and more**—we have all the equipment to help you achieve your vision.

The EXPERIENCE you need.

Our shading and automation experts are some of the **most knowledgeable in the industry**. With more than 700 employees and a combined thousands of years of experience, we know how to address your requirements.

The QUALITY you expect.

To ensure **smooth operation**, we hand check every component and test and operate every shade prior to packing. Mesh fabric shades are backlit to check for imperfections.

The DURABILITY your clients demand.

Cheap substitutes can lead to durability issues. We utilize **high quality components**, to create parts designed to meet or exceed your specifications.

The RELIABILITY you can't find anywhere else.

Manufacturing shades in the United States, coupled with weekly fabric shipments from American weavers Phifer and Mermet® provide more control over quality and scheduling. **Short lead times and high on-time delivery** percentages keep your project on track.

The SOLUTIONS you are looking for.

Draper advanced shading solutions involve a broad spectrum of options for **design, accessories, and functionality,** including a choice of hundreds of fabrics, hardware options, finish color, and dimensions. **Custom tailored solutions** allow us to partner with you to find your perfect fit, even if it is a one-of-a-kind project.

Visit *www.draperinc.com/capabilities* to learn about our wide range of capabilities.

DRAPER®
FOCUSED ON INNOVATIVE SOLUTIONS

Draper shading solutions can be found in some of the highest-profile projects in North America.

See project profiles and case studies detailing how we help architects build their vision.

MADE IN USA WITH AMERICAN & GLOBAL COMPONENTS

411 S. Pearl St. Spiceland, IN 47385
draperinc.com | 800.238.7999
© 2020 All Rights Reserved | 0625 | AboutDraper

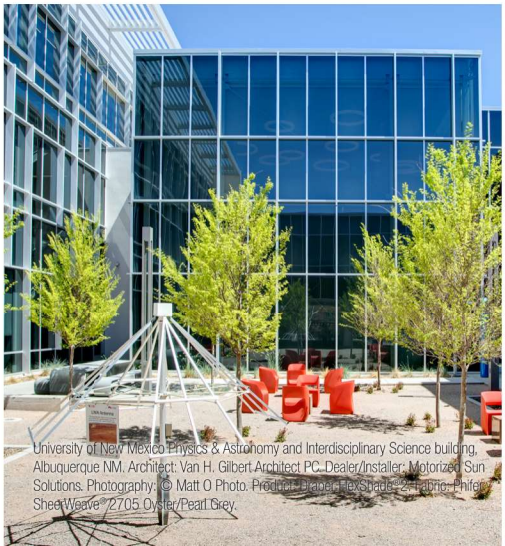

University of New Mexico Physics & Astronomy and Interdisciplinary Science building, Albuquerque NM. Architect: Van H. Gilbert Architect PC. Dealer/Installer: Motorized Sun Solutions. Photography: © Matt O Photo. Product: Draper FlexShade 2. Fabric: Phifer SheerWeave® 2705 Oyster/Pearl Grey.

Clutch-Operated FlexShade® Slim NEXD

Heavy-duty, clutch-operated window shade with slim hardware profile and cassette option

SUBMITTAL
TECHNICAL INFO

Please check all appropriate selections and attach room schedule with verified dimensions.

Fabric Series: _____

Color Name / Number: _____

Openness Factor: _____

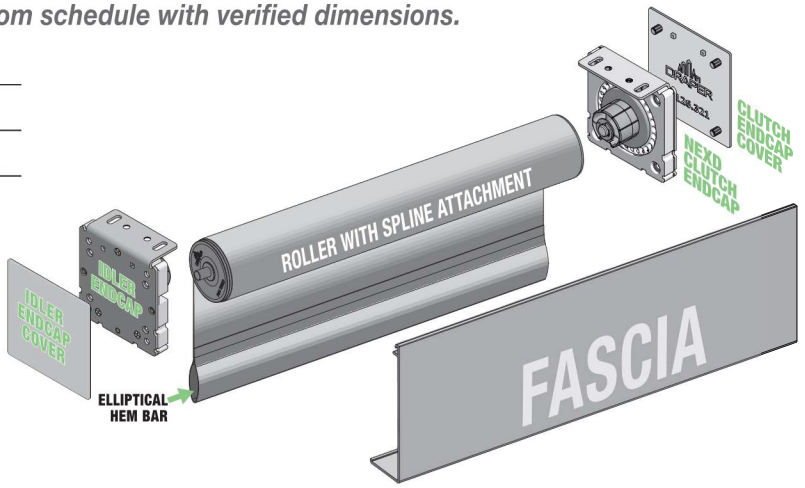

Select Hardware:

- ☐ Endcaps Only
  - ☐ Wall Mount ☐ Ceiling Mount
- ☐ Endcaps with Fascia
  - ☐ Wall Mount ☐ Ceiling Mount
- ☐ Cassette Headbox with Fascia
  - ☐ Wall Mount ☐ Ceiling Mount

Select Clutch Location:

(As seen from INSIDE the room facing the window. Also indicate on room schedule.)

- ☐ Right *(standard)*
- ☐ Left

Select Clutch Color:

- ☐ White *(standard)*
- ☐ Black

Select Bead Chain Type:

- ☐ Steel Chain
  - ☐ Stainless Steel *(standard)* ☐ Black Steel ☐ White Steel
- ☐ Polyester Chain
  - ☐ Black ☐ Bronze ☐ White
  - ☐ Ivory ☐ Grey

Select Cord Tension Device:

- ☐ 'P'-Clip Cord Tension Device *(standard)*
- ☐ Spring-Loaded Chain Tension Device
  (Optional, but required for ANSI/WCMA A100.1 Compliance)

Child Safety Information

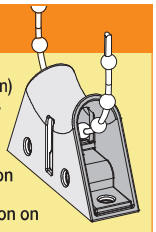

ANSI/WCMA A100.1-2018 standard (developed by the Window Coverings Manufacturer's Association and the Consumer Product Safety Commission) was established on December 15, 2018, to eliminate strangulation hazards for small children from hanging cords and chain loops.

When dealers specify that custom shades comply with ANSI/WCMA A100.1-2018, Draper® provides a pre-installed Spring-Loaded Chain Tension Device (shown at right) for clutch-operated units. When properly installed, tension device prevents creation of a hazardous loop by maintaining tension on bead chain. If not installed properly, shade is partially inoperable.

For more information, please see ANSI/WCMA A100.1-2018 compliance page:
www.draperinc.com/windowshades/wcmacompliance.aspx

Select Fabric Attachment:

- ☐ Spline Attachment *(standard)*
- ☐ LSE Adhesive *(Available upon request for a price deduction.)*

Select Optional Side Channels for Light Gap Reduction:

(May not be compatible with all types of installations)

- ☐ Aluminum "L" Angle ☐ Vinyl "L" Angle
- ☐ Aluminum "U" Channel ☐ Channel Liners
- ☐ Aluminum "H" Channel

Select Hardware Finish:

- ☐ Clear Anodized *(standard)*
- ☐ Black ☐ Bronze ☐ White ☐ Ivory

Select Hem Bar Style:

- ☐ Closed Pocket - 1" *(25mm)* Elliptical Slat *(standard)*
- ☐ Open Pocket - 1" *(25mm)* Elliptical Slat
- ☐ Small Rectangular Exposed Hem Bar - ⅞" x 5/16" *(22mm x 8mm)*
- ☐ Large Rectangular Exposed Hem Bar - 1 ½" x 5/16" *(38mm x 8mm)*
- ☐ Round Exposed Hem Bar - ¾" *(19mm)* diameter

Available Sizes:

WIDTH:	2'	3'	4'	5'	6'	7'	8'	9'	10'
HEIGHT 2'									
3'									
4'									
5'									
6'									
7'									
8'									
9'									
10'									

Please Note: See the submittal document for NEXD FlexShade® with small/large hardware if size needed is not shown here.

PROJECT: _____

_____

ARCHITECT: _____

CONTRACTOR: _____

SUPPLIER: _____

DATE: _____ **REVISED:** _____

DRAPER®

Draper, Inc. | 411 S. Pearl St. Spiceland, IN 47385
draperinc.com | 765.987.7999 | 800.238.7999

© 2020 All Rights Reserved

FORM: FlexShade_NEXD_SLIM_CASSETTE_Sub20

Clutch-Operated FlexShade Slim NEXD

Specifications

EQUIPMENT

NEXD CLUTCH OPERATOR: Delrin® POM thermoplastic with swedged .354" *(9 mm)* primary steel post with rotational bearing ensures smooth and quiet operation. Overrunning design. Positive mechanical engagement of drive mechanism to tube. White *(standard)* or black color options. Stainless steel bead chain *(standard)*. Also available in ivory, grey, black, white, and brown polyester.

ROLLERS: Extruded aluminum 1¼" *(32mm)* and 1⅝" *(40mm)* diameter roller tube as appropriate for shade.

COMPONENTS

ENDCAPS: 1018 steel stamping. 3" W x 3⅜" H *(76mm x 81mm)*. Installs to face, ceiling, or jamb. Field convertible between wall left, wall right or ceiling mount. Idler endcaps to have levelling adjustment.

ENDCAP COVERS: Plastic covers push into endcaps for positive engagement. Available in ivory, bronze, black, silver, or white to match fascia.

HEM BAR: CLOSED POCKET ELLIPTICAL SLAT: 1" *(25mm)* aluminum elliptical slat inside of a 1⅝" *(41mm)* pocket with heat sealed ends. OPEN POCKET ELLIPTICAL SLAT: 1" *(25mm)* aluminum elliptical slat with plastic ends inside of a 1⅝" *(41mm)* pocket. FLAT EXPOSED HEM BAR: SMALL: ⅞" x 5/16" *(22mm x 8mm)* and LARGE: 1½" x 5/16" *(38 x 8mm)* aluminum rectangular hem bar with plastic endcaps. Powder coated in black, bronze, ivory, white, or clear anodized.

FABRIC ATTACHMENT: Spline fabric attachment *(standard)* allows removal of fabric panel without removal of roller assembly LSE adhesive fabric attachment available upon request.

FASCIA: Optional L-shaped cover of 6063-T5 extruded aluminum. Fascia snaps into place using no exposed fasteners. Clear anodized finish *(standard)* or available in ivory, bronze, black, or white powder coat.

CASSETTE HEADBOX: Standard consists of fascia and two interlocking extrusions that form a back/top cover. Suitable for pocket installation. SIZE: 3½" H x 3⅜" W *(89 x 86mm)*. Clear anodized finish *(standard)* or available in ivory, bronze, black, or white powder coat.

CASSETTE EXTRUSION: Extruded aluminum. 2⅞" x ¼" *(73 x 6mm)*. Assembly attached to endcaps by fasteners concealed by endcap covers.

CASSETTE MOUNTING BRACKETS: Spring loaded zinc die-cast and plastic.

LIGHT GAP REDUCTION HARDWARE: Extruded Aluminum. Accepts edges of fabric, prevents light gaps. Interior of channel provides for use of flat head screws.
- **"L" ANGLE:** ¾" x 1" x 12'3" *(1.9 x 2.5 x 373cm)*; 1" x 2¾" x 16' *(2.5 x 7 x 488cm)* or cut to length.
- **"U" CHANNEL:** 1" x 2½" x 16' *(2.5 x 6.4 x 488cm)* or cut to length.
- **"H" CHANNEL:** 1" x 5" x 16' *(2.5 x 12.7 x 488cm)* or cut to length.

DOWNLOADABLE 3-PART SPECIFICATIONS: available at www.draperinc.com.

Please note: Dimensions of rollers, operators, and hardware at manufacturer's discretion.

Mounting Hardware Selections

Please Note: Brackets and endcaps have the only attachment points for mounting a manual FlexShade. Optional fascia and headbox have a thickness of 1/16" *(1.6mm)*.

Endcaps Only
Wall Mount

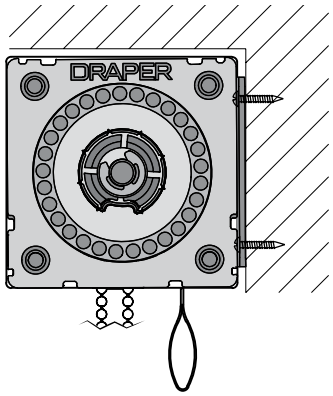

Endcaps Only
Ceiling Mount

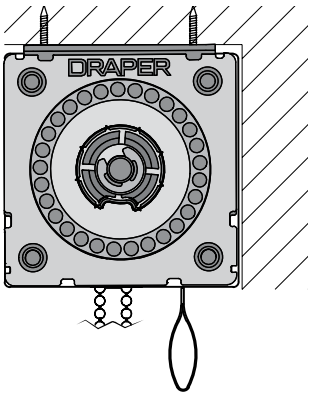

Endcaps and Fascia
Ceilling or Wall Mount
(Wall Mount Shown)

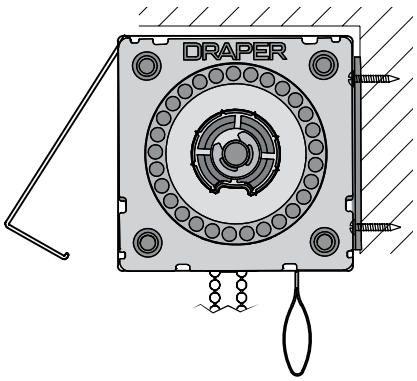

Cassette
Wall Or Ceiling Mount
(Wall Mount Shown)

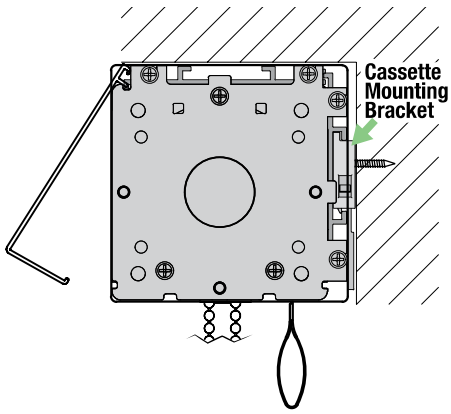

Clutch-Operated FlexShade Slim NEXD

Mounting Hardware Selections

Spline Fabric Attachment

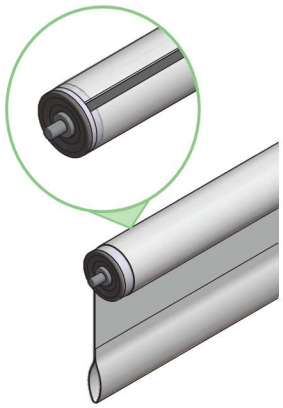

"U" Channel

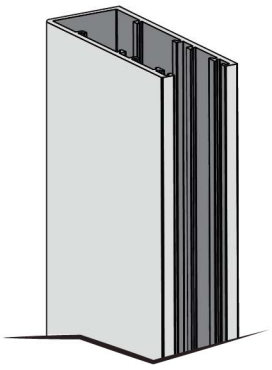

"L" Angle

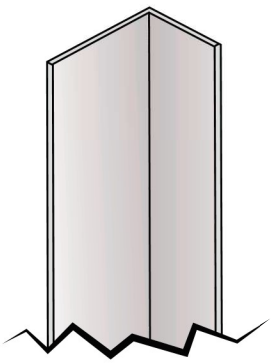

"H" Channel

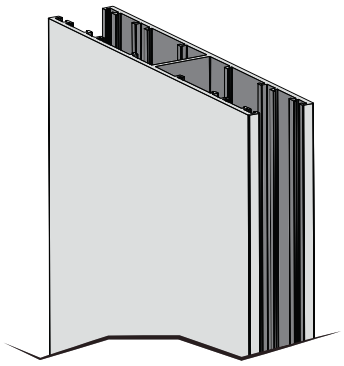

Clutch-Operated FlexShade NEXD Dimensions:

TOP-DOWN VIEW

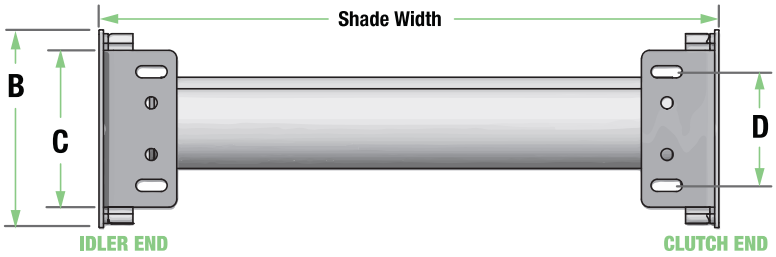

WALL MOUNT DIMENSIONS	
A	3 3⁄16" *(81 mm)*
B	3 1⁄4" *(83 mm)*
C	2 1⁄2" *(64 mm)*
D	1 3⁄16" *(30 mm)*
E	1⁄16" *(1.6 mm)*
F	1 1⁄4" *(32 mm)*

CEILING MOUNT DIMENSIONS	
A	3 1⁄4" *(83 mm)*
B	3 3⁄16" *(81 mm)*
C	2 1⁄2" *(64 mm)*
D	1 3⁄16" *(30 mm)*
E	1⁄16" *(1.6 mm)*
F	1 1⁄4" *(32 mm)*

FRONT VIEW

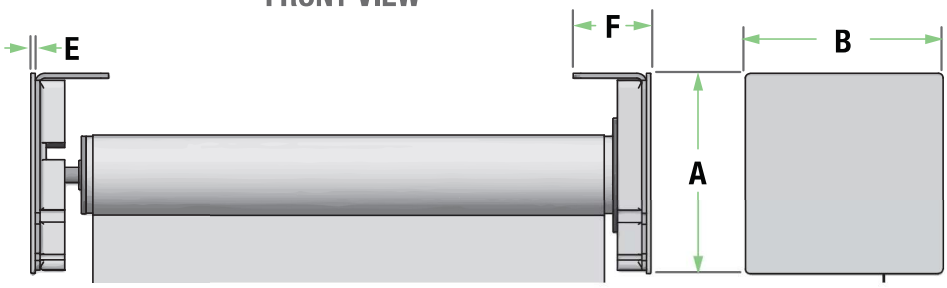

PLEASE NOTE:
Overall Width includes plastic endcap covers, which add 1⁄8" *(3mm)* to Overall Width.

PLEASE NOTE:
When measuring shade height, remember to include endcaps and fascia, or headbox.

Clutch-Operated FlexShade NEXD Components:

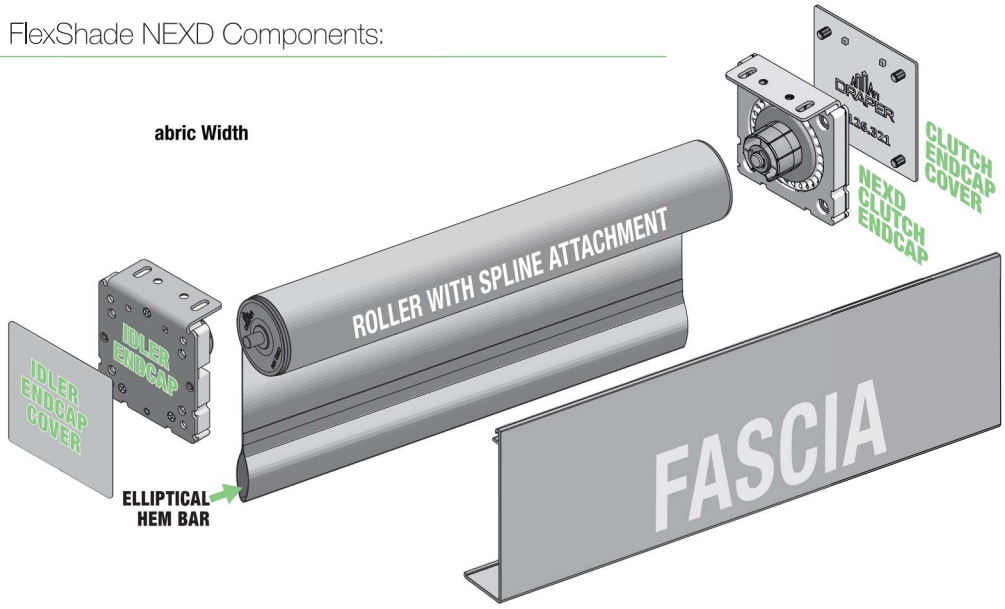

Clutch-Operated FlexShade Slim NEXD

Clutch-Operated FlexShade NEXD Cassette Dimensions:

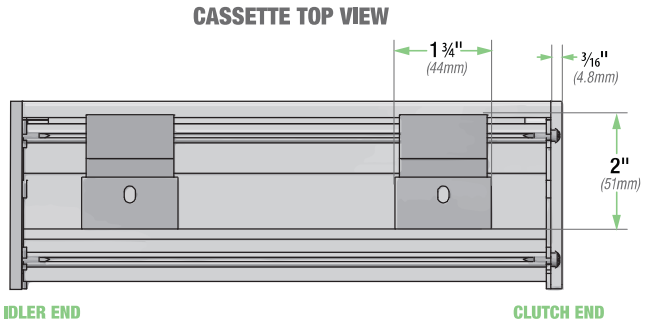

** Endcaps covers are NOT to be removed at any point during NEXD Cassette installation.*

PLEASE NOTE:
When measuring shade height, remember to include endcaps and fascia or headbox.

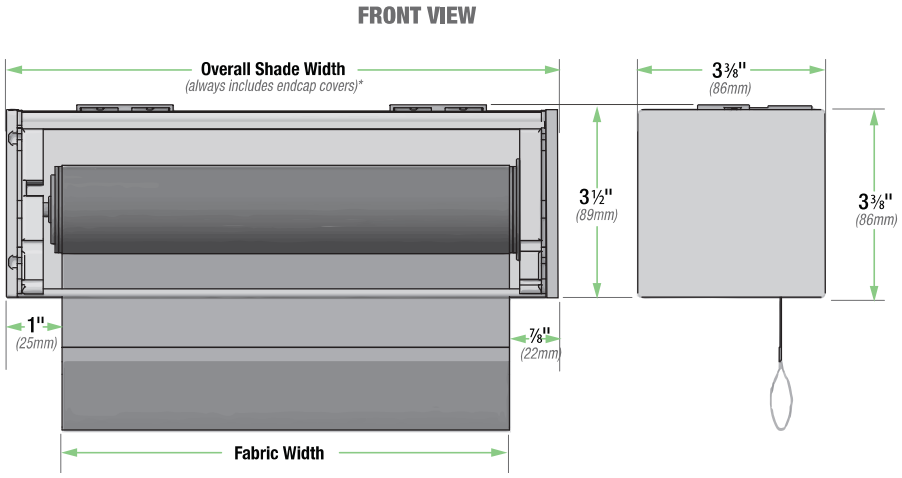

3" *(76mm)* NEXD Cassette Components

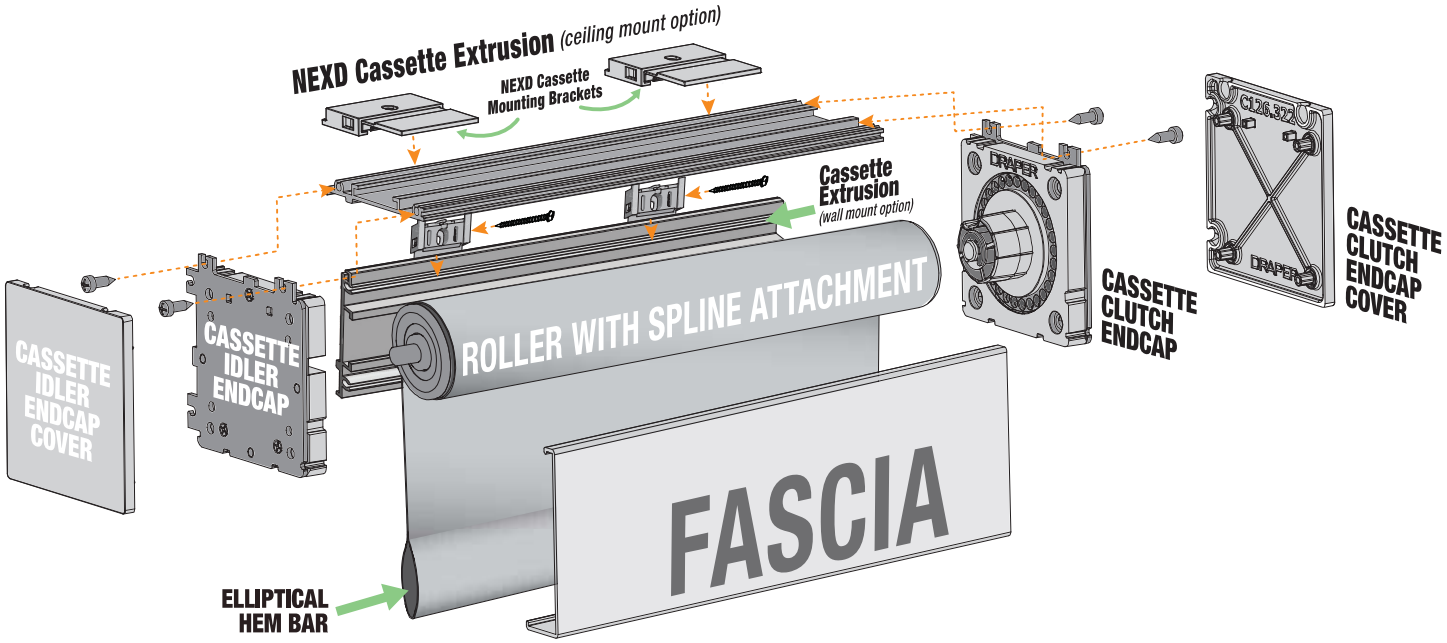

Clutch-Operated FlexShade® NEXD, Small and Large Hardware

Next generation premium manually-operated shade

SUBMITTAL
TECHNICAL INFO

Please check all appropriate selections and attach room schedule with verified dimensions.

FLEXSHADE NEXD

Fabric Series: _____

Color Name / Number: _____

Openness Factor: _____

Please see *Shade Fabric Reference Guide* on the Draper® website for fabric colors and specifications.

Select Clutch Location: *(As seen from INSIDE the room facing the window. Also indicate on room schedule.)*

- ☐ Right *(standard)*
- ☐ Left

Select Clutch Color:

- ☐ White *(standard)*
- ☐ Black

Optional Spring Assist

- ☐ Spring Assist per manufacturer's standards *(as required based on fabric weight)*
- ☐ Spring Assist on all units *(minimum shade width 48" (122cm)*
- ☐ Spring Assist as indicated on room schedule

Select Bead Chain Type:

- ☐ Steel Chain
  - ☐ Stainless Steel *(standard)* ☐ Black Steel ☐ White Steel
- ☐ Polyester Chain
  - ☐ Black ☐ Bronze ☐ White
  - ☐ Ivory ☐ Grey

Select Cord Tension Device:

- ☐ 'P'-Clip Cord Tension Device *(standard)*
- ☐ Spring-Loaded Chain Tension Device *(Optional, but required for ANSI/WCMA A100.1 Compliance)*

Select Fabric Orientation:

- ☐ Regular Roll *(from BACK of roller - standard)*
- ☐ Reverse Roll *(from FRONT of roller - not compatible with Fascia)*

Select Fabric Attachment:

- ☐ Spline Attachment *(standard)*
- ☐ LSE adhesive *(available upon request for a price deduction.)*

Select Hem Bar Style:

- ☐ Closed Pocket - 1" *(25mm)* Elliptical Slat *(standard)*
- ☐ Open Pocket - 1" *(25mm)* Elliptical Slat
- ☐ Small Rectangular Exposed Hem Bar - ⅞" x 5/16" *(22mm x 8mm)*
- ☐ Large Rectangular Exposed Hem Bar - 1 ½" x 5/16" *(38mm x 8mm)*
- ☐ Round Exposed Hem Bar - ¾" *(19mm)* diameter

Child Safety Information

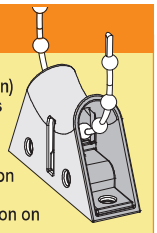

ANSI/WCMA A100.1-2018 standard (developed by the Window Coverings Manufacturer's Association and the Consumer Product Safety Commission) was established on December 15, 2018, to eliminate strangulation hazards for small children from hanging cords and chain loops.

When dealers specify that custom shades comply with ANSI/WCMA A100.1-2018, Draper® provides a pre-installed Spring-Loaded Chain Tension Device (shown at right) for clutch-operated units. When properly installed, tension device prevents creation of a hazardous loop by maintaining tension on bead chain. If not installed properly, shade is partially inoperable.

For more information, please see ANSI/WCMA A100.1-2018 compliance page: www.draperinc.com/windowshades/wcmacompliance.aspx

Select Hardware

- ☐ Endcaps Only
  - ☐ Wall / Ceiling Mount
- ☐ Endcaps with Fascia
  - ☐ Wall / Ceiling Mount
- ☐ Headbox

PLEASE NOTE: The Pocket-Style Headbox is not designed for pre-installation, as the shade must be installed at the same time as the headbox. If a headbox needs to be pre-installed, Draper recommends using the Type D Pocket Headbox.

  - ☐ Ceiling / Wall *(Surface Headbox)* ☐ Pocket Style
  - ☐ Type "D" Pocket with Tile Lip *(White only)*
  - ☐ Custom Headbox
- ☐ Wall Clip
  - ☐ With Ceiling Tile Lip ☐ Without Ceiling Tile Lip
- ☐ Closure Panel for Type "D" Pocket or Wall Clip
  - ☐ 1½" *(38 mm) (recommended)* ☐ 3"*(76 mm)* ☐ 5" *(127 mm)*

Select Optional Side Channels for Light Gap Reduction:

(May not be compatible with all types of installations)

- ☐ Aluminum "L" Angle ☐ Vinyl "L" Angle
- ☐ Aluminum "U" Channel ☐ Channel Liners
- ☐ Aluminum "H" Channel

Select Hardware Finish *(Does not apply to Type "D" Headbox)*:

- ☐ Clear Anodized *(standard)* ☐ Ivory ☐ Black
- ☐ Bronze ☐ White ☐ Custom *(Contact Draper)*

Available Sizes:

HEIGHT \ WIDTH:	2'	3'	4'	5'	6'	7'	8'	9'	10'	11'	12'	13'	14'	15'
2'	■	■	■	■	■	■	■	▫	▫	▫	▫			
3'	■	■	■	■	■	■	■	▫	▫	▫	▫			
4'	■	■	■	■	■	■	■	▫	▫	▫	▫			
5'	■	■	■	■	■	■	■	▫	▫					
6'	■	■	■	■	■	■	■	▫	▫					
7'	■	■	■	■	■	■	■	▫	▫					
8'	■	■	■	■	■	■	■	▫	▫					
9'	▫	▫	▫	▫	▫	▫	▫	▫						
10'	▫	▫	▫	▫	▫	▫	▫	▫						
11'	▫	▫	▫	▫	▫	▫	▫							
12'	▫	▫	▫	▫	▫	▫	▫							
13'														
14'														
15'														

** Sizes requiring large endcaps/brackets will vary according to fabric.*

■ Default small *(slim available)*
▫ Small endcaps/brackets and 1 9/16" *(40mm)* roller are recommended.
□ Large endcaps/brackets and 3" *(76mm)* roller may be required.

PROJECT: _____

_____

ARCHITECT: _____

CONTRACTOR: _____

SUPPLIER: _____

DATE: _____ **REVISED:** _____

DRAPER®

Draper, Inc. | 411 S. Pearl St. Spiceland, IN 47385
draperinc.com | 765.987.7999 | 800.238.7999
© 2022 All Rights Reserved | **FORM: FlexShade_NEXD_SMALL_LARGE_Sub22_R**

Clutch-Operated FlexShade® NEXD, Small and Large Hardware

Specifications

EQUIPMENT

NEXD CLUTCH OPERATOR: Delrin® POM thermoplastic with swedged .354" *(9 mm)* primary steel post with rotational bearing to ensure smooth and quiet operation. Overrunning design. Positive mechanical engagement of drive mechanism to tube. White *(standard)* or black color options. Stainless steel bead chain *(standard)*. Ivory, grey, black, white, and brown polyester chain available.

OPTIONAL SPRING-ASSIST IDLER: Adjustment-free system includes spring-assist components to reduce lifting forces required to raise the shade. Manufacturer shall provide estimated torque for shade unit. Spring-assist is recommended on estimated non-spring-assist torque above 6 lb-in; required on shades with an estimated torque higher than 15 lb-in.

ROLLERS: Extruded aluminum 1 9/16", 2.36", or 3.12" *(40, 60, or 79mm)* diameter roller tube as appropriate for shade.

COMPONENTS

ENDCAPS: 1018 steel stamping. Two sizes available: SMALL: 3 7/8" x 3 3/8" *(98 x 86 mm)*, LARGE: 4 5/8" x 4 5/8" *(117 x 117 mm)*. Installs to face, ceiling, or jamb. Field convertible between wall left, wall right, or ceiling mount. Idler endcaps to have leveling adjustment.

ENDCAP COVERS: Plastic covers push into endcaps for positive engagement. Available in ivory, bronze, black, silver, or white to match fascia.

HEM BAR: CLOSED POCKET ELLIPTICAL SLAT: 1" *(25mm)* aluminum elliptical slat inside of a 1 5/8" *(41mm)* pocket with heat sealed ends. OPEN POCKET ELLIPTICAL SLAT: 1" *(25mm)* aluminum elliptical slat with plastic ends inside of a 1 5/8" *(41mm)* pocket. FLAT EXPOSED HEM BAR: SMALL: 7/8" x 5/16" *(22mm x 8mm)* and LARGE: 1½" x 5/16" *(38mm x 8mm)* aluminum rectangular hem bar with plastic endcaps. Powder coated in black, bronze, ivory, white, or clear anodized.

FABRIC ATTACHMENT: Spline fabric attachment *(standard)* allows removal of fabric panel without removal of roller assembly. LSE adhesive fabric attachment available upon request.

FASCIA: L-shaped cover of 6063-T5 extruded aluminum. Fascia snaps into place using no exposed fasteners. Clear anodized finish *(standard)* or available in ivory, bronze, black, or white powder coat.

SURFACE HEADBOX: Consists of fascia, "L" shaped back/top cover. Endcaps slide into extrusion without exposed fasteners.

POCKET HEADBOX: For pocket installation, includes a "U" shaped back/top/front cover with removable bottom closure panel.
Small Size: 3 7/16" x 3 15/16" *(87 x 100 mm)*
Large Size: 4 11/16" x 4 11/16" *(119 x 119 mm)*. Some exposed fasteners required.

TYPE "D" POCKET: Type "D" Shade Pocket, extruded aluminum, for perimeter installation. Accepts FlexShade® installed with endcaps. Finished in white paint.
5" x 5 3/8" x .125" *(127 x 137 x 3 mm)* with 7/8" *(22 mm)* tile support lip & removable bottom closure.

LIGHT GAP REDUCTION HARDWARE: Extruded aluminum. Accepts edges of fabric, prevents light gaps. Interior of channel provides for use of flat head screws. Available with or without lining.

"L" ANGLE: ¾" x 1" x 12'3" *(1.9x2.5x373cm)*; 1" x 2 ¾" x 16' *(2.5x7x488cm)* or cut to length.

"U" CHANNEL: 1" x 2 ½" x 16' *(2.5x6.4x488cm)* or cut to length.

"H" CHANNEL: 1" x 5" x 16' *(2.5x12.7x488cm)* or cut to length.

VINYL "L" ANGLE: 1 ½" x ¾" x 8' *(3.81x1.9x243.84cm)* stock length only. Installed using adhesive.

DOWNLOADABLE 3-PART SPECIFICATIONS: available at www.draperinc.com.

Please note: Dimensions of rollers, operators, and hardware at manufacturer's discretion.

Mounting Hardware Selections

Please Note: Endcaps have the only attachment points for mounting a manual FlexShade®. Optional fascia and headbox have a thickness of 1/16" *(1.6mm)*.

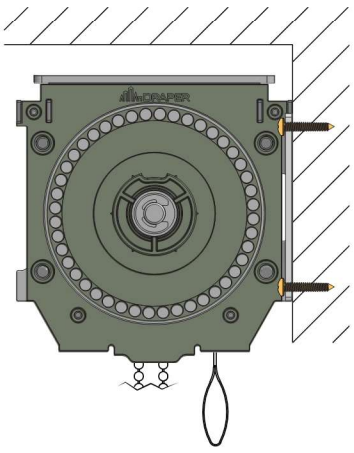

Endcaps Only, Wall Mount

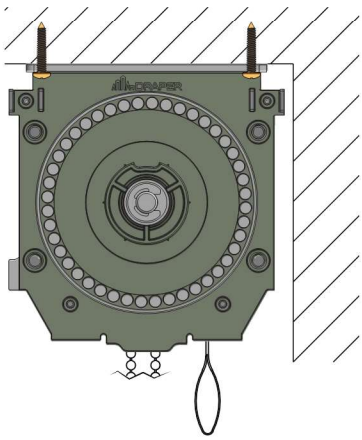

Endcaps Only, Ceiling Mount

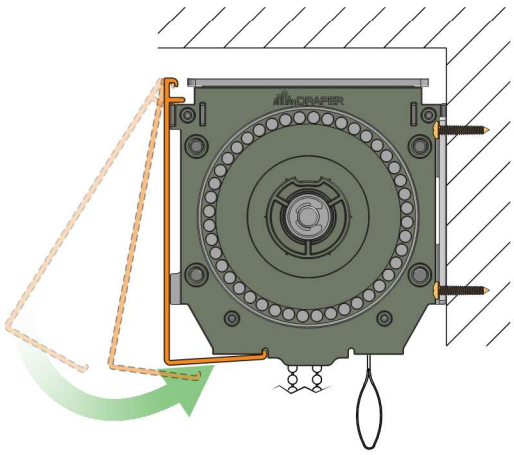

Fascia Only with Ceiling or Wall Mounting Endcaps

Headbox Installation Options

Surface Headbox

Consists of:

- Fascia
- Back/Top Cover
- Ceiling/Wall Endcaps

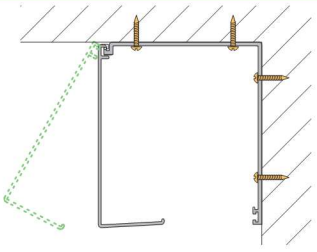

Pocket Style Headbox

Consists of:

- Extruded Pocket
- Bottom Closure Panel
- Ceiling/Wall Endcaps

SMALL SIZE: 3 7/16" x 3 15/16"
(87 mm x 100 mm)

LARGE SIZE: 4 11/16" x 4 11/16"
(119mm x 119 mm)

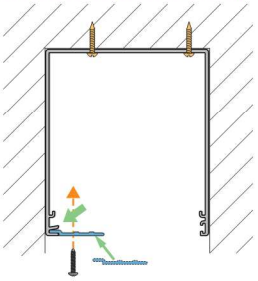

Type D Pocket

Consists of:

- Extruded aluminum pocket
- A lip supports lay-in ceiling
- Pre-welded corners and ends available
- Ends with or without tile support lip

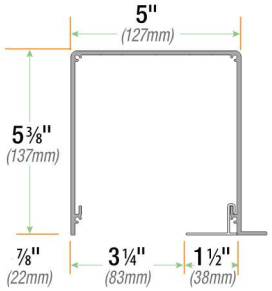

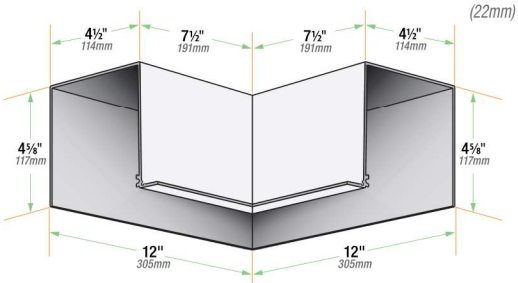

Typical pre-welded corner section
(not to scale)

Clutch-Operated FlexShade® NEXD, Small and Large Hardware

Wall Clip and Closure Options

Closure Options

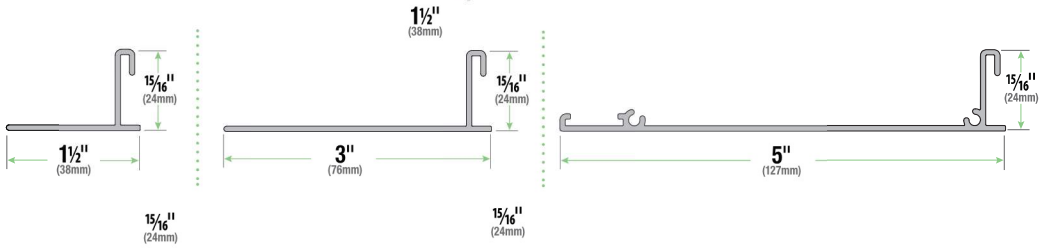

Wall Clip Options

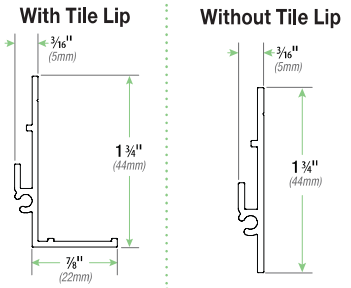

Mounting Hardware Selections

Spline Fabric Attachment

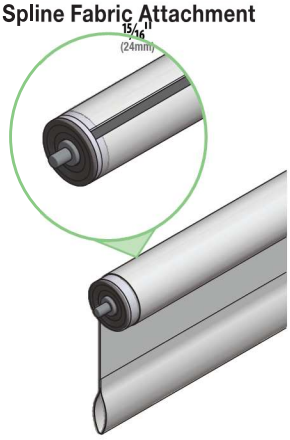

"U" Channel

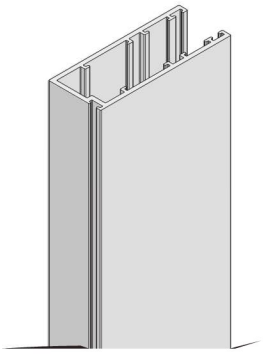

"L" Angle

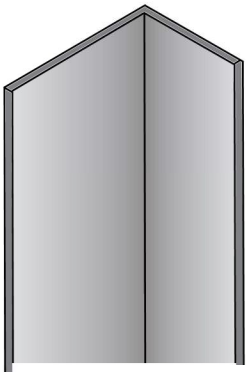

"H" Channel

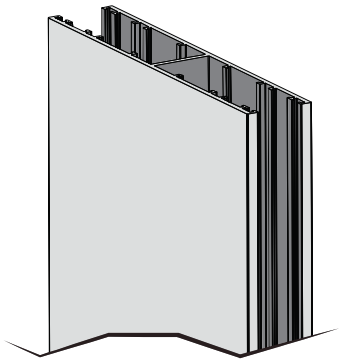

Components *(Small Hardware shown)*

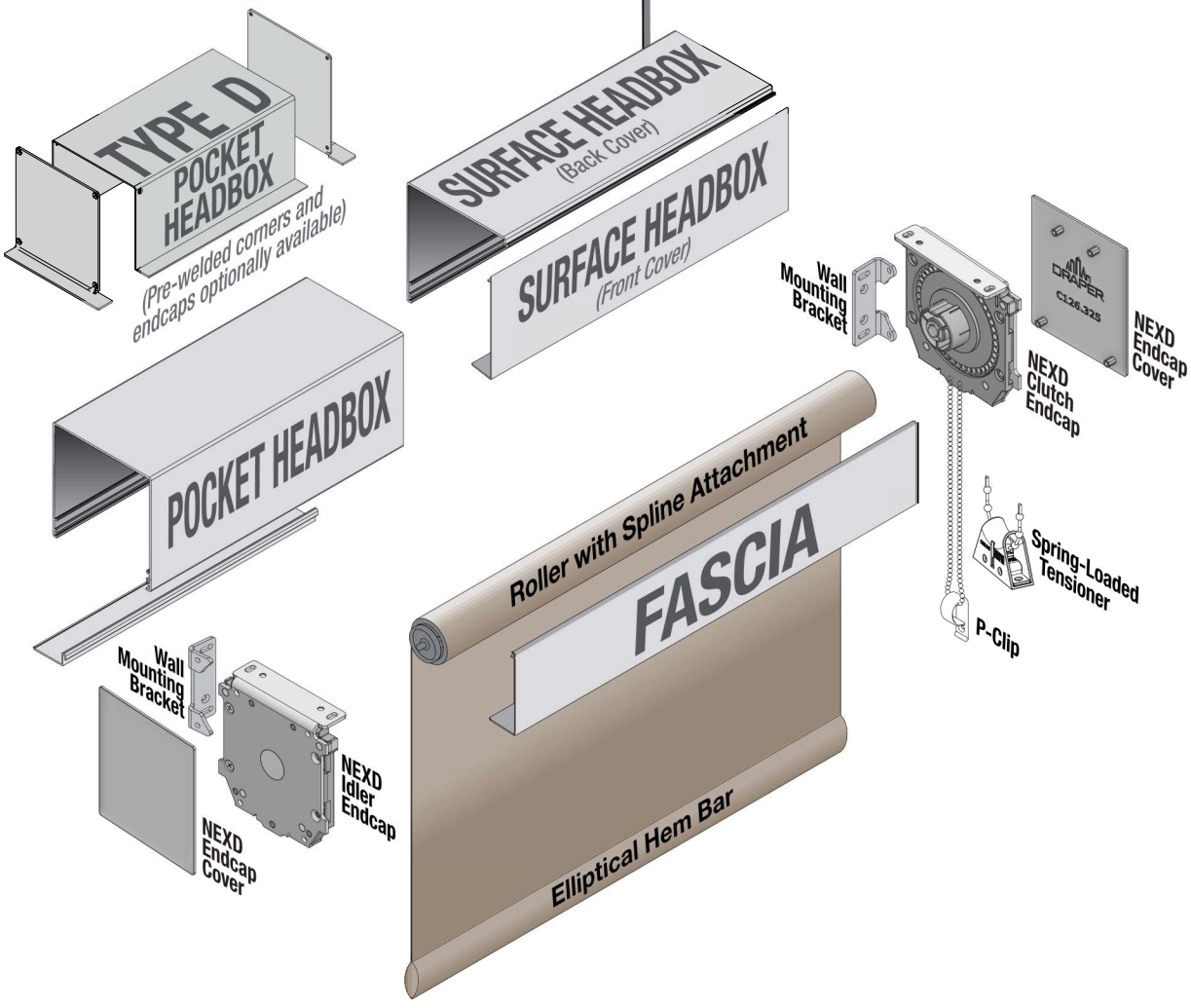

Clutch-Operated FlexShade® NEXD, Small and Large Hardware

Dimensions

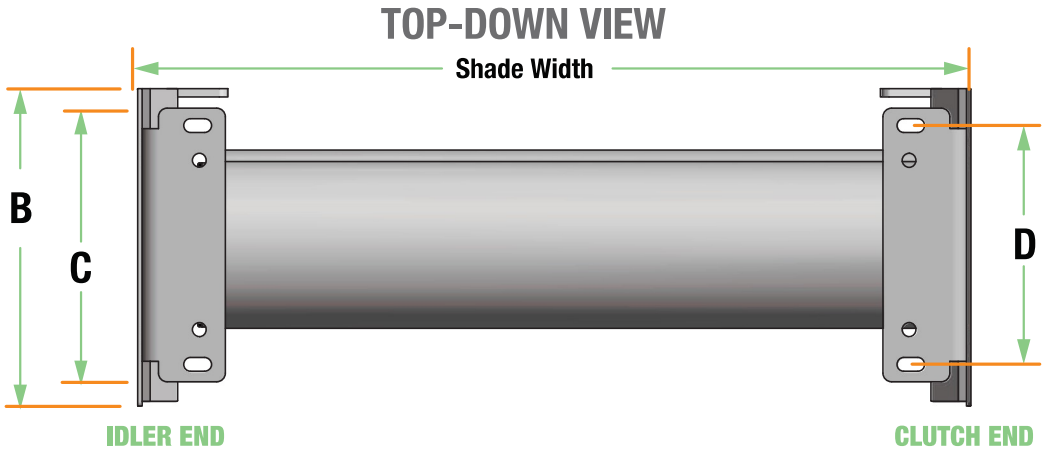

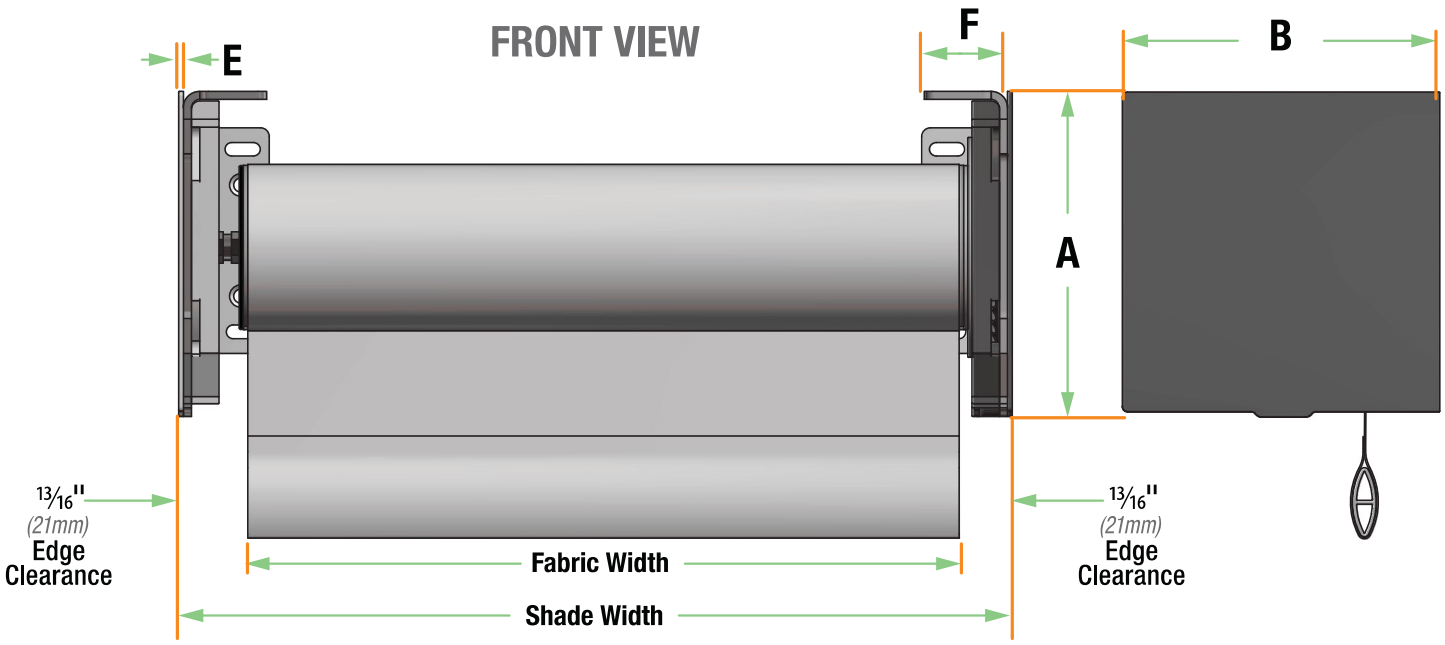

FlexShade® NEXD Endcaps & Fascia

	ENDCAPS		ENDCAPS WITH FASCIA		HEADBOX WITH ENDCAPS	
	SMALL	LARGE	SMALL	LARGE	SMALL	LARGE
A	3 7/8" (98mm)	4 5/8" (117mm)	3 7/8" (98mm)	4 5/8" (117mm)	3 15/16" (100mm)	4 11/16" (119mm)
B	3 3/8" (86mm)	4 5/8" (117mm)	3 3/8" (86mm)	4 5/8" (117mm)	3 7/16" (87mm)	4 11/16" (119mm)
C	2 3/4" (70mm)	3 15/16" (100mm)	2 3/4" (70mm)	3 15/16" (100mm)	2 3/4" (70mm)	3 15/16" (100mm)
D	2 1/8" (54mm)	3 7/16" (87mm)	2 1/8" (54mm)	3 7/16" (87mm)	2 1/8" (54mm)	3 7/16" (87mm)
E	1/16" (2mm)	1/16" (2mm)	1/16" (2mm)	1/16" (2mm)	1/16" (2mm)	1/16" (2mm)
F	1 1/4" (32mm)	1 1/4" (32mm)	1 1/4" (32mm)	1 1/4" (32mm)	1 1/4" (32mm)	1 1/4" (32mm)

SheerWeave® Style SW7500
Opaque Fabric

SHEERWEAVE® BY PHIFER


7500 R13
Ice

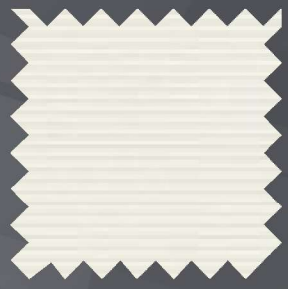
7500 R39
Cloud

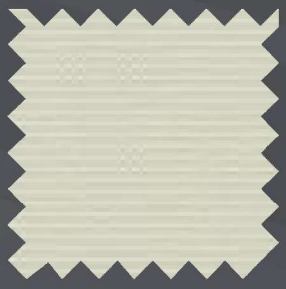
7500 R40
Porcelain

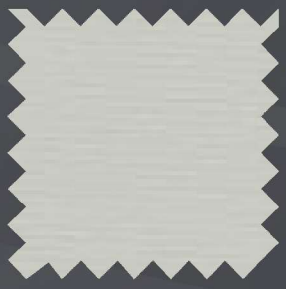
7500 R41
Limestone

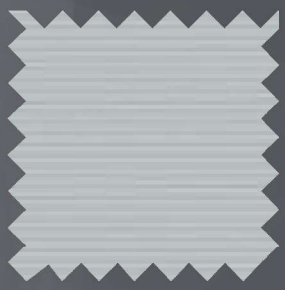
7500 R97
Mist

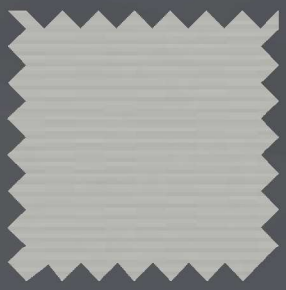
7500 R42
Nimbus

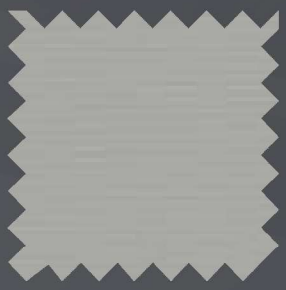
7500 R43
Tundra

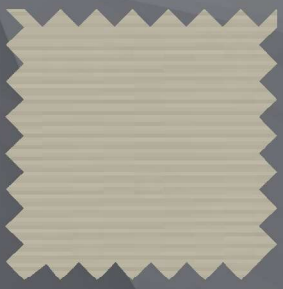
7500 R17
Dune

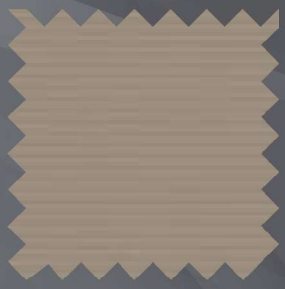
7500 R19
Stone

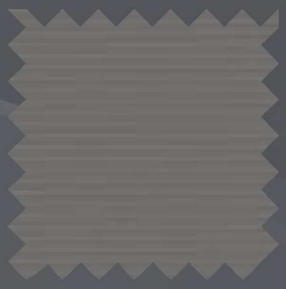
7500 R20
Odyssey

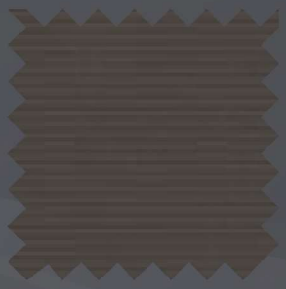
7500 R21
Orient

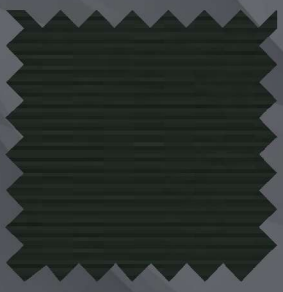
7500 R22
Midnight

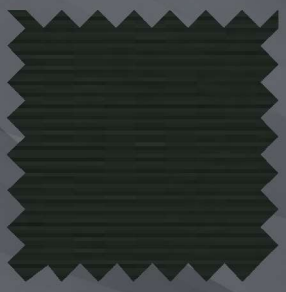
7500 R99
Midnight x2

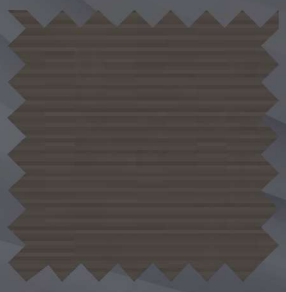
7500 S97
Orient x2

Digital sample of actual colors may vary slightly.

DRAPER®

SheerWeave® Style SW7500 Opaque Fabric

This attractive opaque fabric maintains high quality at an economical price. Style 7500 is presented in a classic range of neutral colors with a unique PVC-free composition that is ideal for commercial applications. SheerWeave Style 7500 is an excellent option when total privacy is needed.

SHEERWEAVE STYLE 7500

STANDARD WIDTH	118" (300cm)	FABRIC THICKNESS	0.016 in (0.40 mm)
ROLL LENGTH	30 Linear Yards (27.4 lm)	OPENNESS FACTOR	Opaque
COMPOSITION	100% Polyester with Acrylic Coating	ACOUSTICAL VALUE	NRC 0.00 / SAA 0.03
MESH WEIGHT	12.14 oz/yd² (412 g/m²)	ACOUSTICAL PERFORMANCE	NRC (Noise Reduction Coefficient) and SAA (Sound Absorption Average) tested in accordance with ASTM C423-09a.

SPECIFICATIONS

FIRE CLASSIFICATION	California U.S. Title 19 (small scale), NFPA 101 (Class A Rating), NFPA 701 TM#1 (small scale), BS 5867 Part 2 Type B Performance, CAN/ULC-S 109 (large and small scale), IBC Section 803.1.1 (Class A Rating), CAN/CGSB 2-4.162-M80.
BACTERIA AND FUNGAL RESISTANCE	ASTM E 2180 and ASTM G21
ENVIRONMENTAL CERTIFICATION	Certified to GREENGUARD and GREENGUARD Gold standards for low chemical emissions into indoor air during product usage.
SAFE USE	RoHS/Directive 2002/95/EC, US Consumer Product Safety Commission Section 101 and ANSI/WCMA A 100.1-2007 for lead content.
STANDARD USES	Roller shades & panel tracks.
UV PROTECTION	Seal of Approval by the Melanoma International Foundation (MIF) for effectiveness in preventing sun damage to the skin or eyes.
WARRANTY	5-year interior.

CLEANING INSTRUCTIONS	Fabric should be regularly dusted/vacuumed as appropriate. If commercial spot cleaners are used, they must first be tested and allowed to dry on an inconspicuous area to ensure compatibility.

STYLE 7500

CODE / COLOR	COLOR	SOLAR OPTICAL PROPERTIES				SHGC/G VALUE g-tot (glass & blind)	
						Single	Insulating
Room-side	**Street-side**	TS%	RS%	AS%	TV%	1/4 CL	1 HA
R13 Ice	Off-white	0	68	32	0	0.24	0.20
R39 Cloud	Off-white	0	68	32	0	0.24	0.20
R40 Porcelain	Off-white	0	68	32	0	0.24	0.20
R41 Limestone	Off-white	0	68	32	0	0.24	0.20
R97 Mist	Off-white	0	68	32	0	0.24	0.20
R42 Nimbus	Off-white	0	68	32	0	0.24	0.20
R43 Tundra	Off-white	0	68	32	0	0.24	0.20
R17 Dune	Off-white	0	68	32	0	0.24	0.20
R19 Stone	Off-white	0	68	32	0	0.24	0.20
R20 Odyssey	Off-white	0	68	32	0	0.24	0.20
R21 Orient	Off-white	0	68	32	0	0.24	0.20
R22 Midnight	Off-white	0	68	32	0	0.24	0.20
R99 Midnight x2	Midnight	4	9	87	0	0.57	0.36
S97 Orient x2	Orient	4	13	83	0	0.56	0.35

*TS - Solar Transmittance, RS - Solar Reflectance, AS - Solar Absorptance, TV - Visual Transmittance *SHGC = Solar Heat Gain Coefficient *1/4 CL = ¼" Clear Glass, 1 HA = 1" Heat Absorbing Glass *Fabrics Installed Internally, Zero-Degree Profile Angle *Solar Heat Gain Coefficient (SHGC) shown calculated according to Office of Building Technology, State and Community Programs, Energy Efficiency and Renewable Energy, U.S. Department of Energy's definition of SHGC. SHGC represents the percentage of solar heat gain that is transmitted to the interior through the glass and shading system. If you are using glass whose performance is listed in terms of SC, you may convert to SHGC by multiplying the SC by 0.87.

PRODUCT CERTIFIED FOR LOW CHEMICAL EMISSIONS UL.COM/GG UL 2818

MIF Seal of Approval

DRAPER®

411 S. Pearl St. | Spiceland, IN 47385
765.987.7999 | 800.238.7999
draperinc.com

PHIFER INCORPORATED

® SheerWeave is a registered trademark of PHIFER INCORPORATED.
® MICROBAN is a registered trademark of Microban Products Company.
TM UL, the UL logos and the UL mark are trademarks of UL LLC.
© PHIFER INCORPORATED V18 3033833

SheerWeave® Style SW2500 / 2400 / 2900 / 2600
(2410) (2390) (2360)

SHEERWEAVE® BY PHIFER

Style SW2500
(1% open)

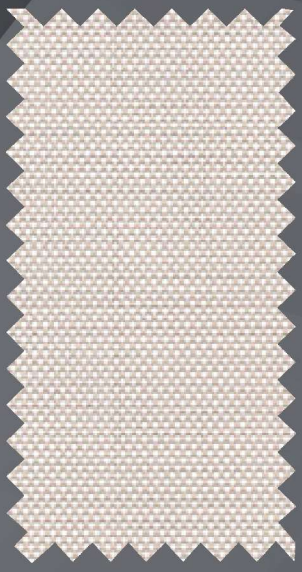

SW2520
P13 Oyster / Beige

Style SW2400 (2410)
(3% open)

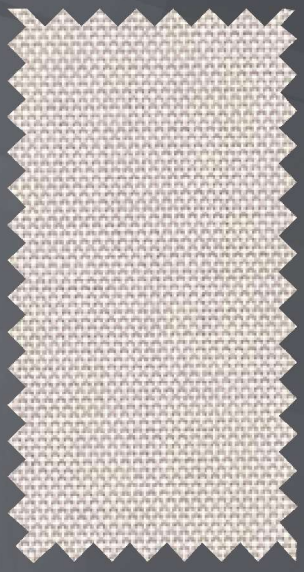

SW2420
P13 Oyster / Beige

Style SW2900 (2390)
(5% open)

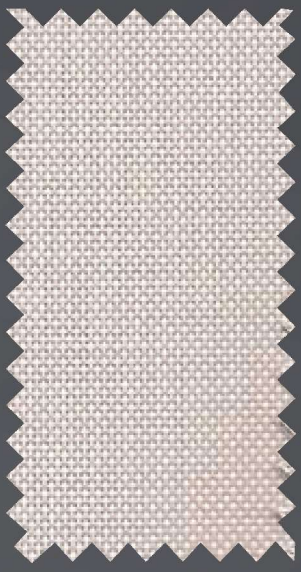

SW2920
P13 Oyster / Beige

Style SW2600 (2360)
(10% open)



SW2620
P13 Oyster / Beige

The above styles are also available in the colors shown below.

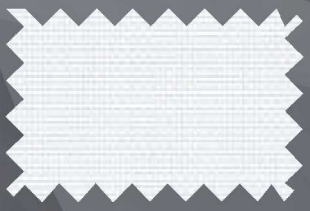

P84 Brite White

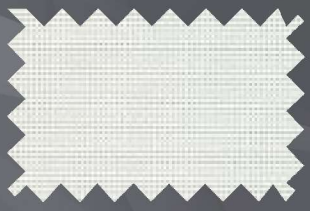

P12 Oyster

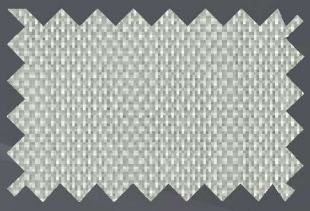

P14 Oyster / Pearl Gray

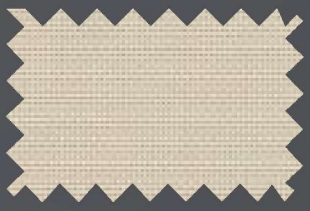

Q20 Beige

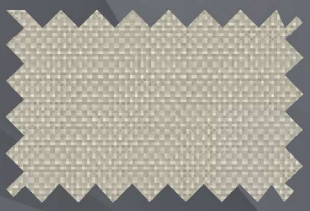

Q21 Beige / Pearl Gray

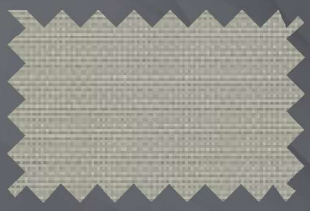

V20 Pearl Gray

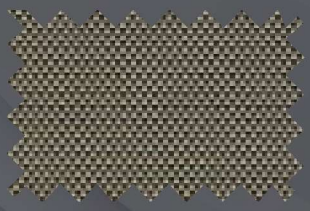

V32 Charcoal / Alpaca

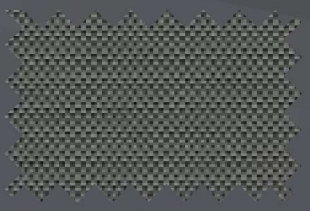

V22 Charcoal / Gray

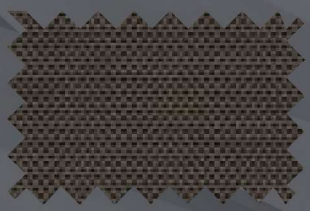

V24 Charcoal / Chestnut



V21 Charcoal

DRAPER®

Digital sample of actual colors may vary slightly.

SheerWeave® Style SW2500 / 2400 / 2900 / 2600
(2410) (2390) (2360)

Manufactured with ease of fabrication in mind, SheerWeave® Styles 2500, 2400 (2410), 2900 (2390) and 2600 (2360) are full basketweaves designed expressly for those applications which require a more opaque and non-directional fabric. These styles can also be used in exterior roller shades.

SHEERWEAVE STYLE SW2500 / 2400 / 2900 / 2600

STANDARD WIDTH	**2500, 2400 (2410), 2900 (2390) and 2600 (2360):** 63", 98" and 126" (160 cm, 248.9 cm and 320 cm).	FABRIC THICKNESS	**2500:** 0.024 in (0.61 mm) **2400 (2410):** 0.020 in (0.51 mm) **2900 (2390):** 0.017 in (0.43 mm) **2600 (2360):** 0.019 in (0.48 mm)
ROLL LENGTH	30 Linear Yards (27.4 lm)	OPENNESS FACTOR	**2500:** Approximately 1% **2400 (2410):** Approximately 3% **2900 (2390):** Approximately 5% **2600 (2360):** Approximately 10%
COMPOSITION	**2500:** 37% Fiberglass, 63% Vinyl on Fiberglass. **2400 (2410):** 36% Fiberglass, 64% Vinyl on Fiberglass. **2900 (2390) and 2600 (2360):** 35% Fiberglass, 65% Vinyl on Fiberglass.	UV BLOCKAGE	**2500:** Approximately 99% **2400 (2410):** Approximately 97% **2900 (2390):** Approximately 95% **2600 (2360):** Approximately 90%
MESH WEIGHT	**2500:** 16.2 oz/yd² (549 g/m²) **2400 (2410):** 14.1 oz/yd² (478 g/m²) **2900 (2390):** 11.8 oz/yd² (400 g/m²) **2600 (2360):** 10.4 oz/yd² (353 g/m²)	ACOUSTICAL VALUE	**2500:** NRC 0.55 / SAA 0.54 **2400 (2410):** NRC 0.20 / SAA 0.21 **2900 (2390):** NRC 0.10 / SAA 0.12 **2600 (2360):** NRC 0.05 / SAA 0.06
		ACOUSTICAL PERFORMANCE	NRC (Noise Reduction Coefficient) and SAA (Sound Absorption Average) tested in accordance with ASTM C423-09a.

SPECIFICATIONS

FIRE CLASSIFICATION	**2500 / 2600 (2360) / 2400 (2410) / 2900 (2390):** California U.S. Title 19 (small scale), NFPA 701 TM#1 (small scale), NFPA 101 (Class A Rating), IBC Section 803.1.1 (Class A Rating), BS 5867 Part 2 Type B Performance, NFPA 701 TM#2 (large scale), CAN/ULC-S 109 (large and small scale), CAN/CGSB2-4.162-M80
BACTERIA AND FUNGAL RESISTANCE	ASTM E 2180, ASTM G21, ASTM G22, AATCC30 Part 3, ASTM D 3273, GREENGUARD Mold and Bacteria Standard ASTM 6329; includes Microban antimicrobial additives.
ENVIRONMENTAL CERTIFICATION	Certified to GREENGUARD and GREENGUARD Gold standards for low chemical emissions into indoor air during product usage.
SAFE USE	RoHS/Directive 2002/95/EC, US Consumer Product Safety Commission Section 101 and ANSI/WCMA A 100.1-2007 for lead content and REACH (EC 1907/2006) compliant.
STANDARD USES	Roller shades and panel tracks.
WARRANTY	10-year interior, 5-year exterior.

TECHNICAL DATA

		SOLAR OPTICAL PROPERTIES																SHGC/G VALUE g-tot (glass & blind)							
		TS%				RS%				AS%				TV%				Single 1/4 CL				Insulating 1HA			
	OPENNESS %	**1%**	**3%**	**5%**	**10%**	**1%**	**3%**	**5%**	**10%**	**1%**	**3%**	**5%**	**10%**	**1%**	**3%**	**5%**	**10%**	**1%**	**3%**	**5%**	**10%**	**1%**	**3%**	**5%**	**10%**
COLOR	**NUMBER**																								
Brite White	P84	15	18	22	27	72	70	67	62	13	12	11	11	14	17	20	25	0.26	0.28	0.30	0.33	0.20	0.21	0.22	0.24
Oyster	P12	15	17	21	27	68	64	61	57	17	19	18	16	13	12	14	21	0.26	0.30	0.30	0.35	0.21	0.22	0.23	0.24
Oyster / Beige	P13	10	11	17	24	60	55	54	51	30	34	29	25	9	8	12	19	0.31	0.32	0.35	0.37	0.23	0.23	0.24	0.26
Oyster / Pearl Gray	P14	7	9	14	20	50	44	45	45	43	47	41	35	6	7	10	16	0.35	0.38	0.39	0.41	0.25	0.26	0.27	0.27
Beige	Q20	7	10	14	19	50	48	47	44	43	42	39	37	6	7	10	16	0.36	0.37	0.40	0.43	0.25	0.26	0.27	0.28
Beige / Pearl Gray	Q21	5	7	11	17	42	39	38	39	53	54	51	44	5	5	9	15	0.39	0.42	0.43	0.44	0.27	0.28	0.29	0.30
Pearl Gray	V20	3	6	10	16	32	31	31	30	65	63	59	54	3	5	9	14	0.44	0.44	0.47	0.49	0.30	0.30	0.30	0.31
Charcoal	V21	1	3	4	10	4	3	4	4	95	94	92	86	1	3	5	11	0.59	0.60	0.60	0.62	0.37	0.37	0.37	0.37
Charcoal / Gray	V22	2	3	5	12	8	9	9	8	90	88	86	80	3	3	6	14	0.57	0.57	0.57	0.60	0.36	0.36	0.36	0.37
Charcoal / Chestnut	V24	1	3	6	11	6	6	6	5	93	91	88	84	1	3	6	12	0.59	0.58	0.59	0.61	0.37	0.37	0.37	0.37
Charcoal / Alpaca	V32	1	4	7	12	16	20	18	15	83	76	75	73	2	5	9	16	0.53	0.51	0.53	0.57	0.34	0.33	0.34	0.35

PRODUCT CERTIFIED FOR LOW CHEMICAL EMISSIONS UL.COM/GG UL 2818

10 YEAR INTERIOR WARRANTY

5 YEAR EXTERIOR WARRANTY

PROUDLY MADE IN THE USA

HALOGEN FREE FLAME RETARDANT

SAFE USE

PROTECTION THAT LIVES ON MICROBAN

PRINTABLE

TRACKLESS TECHNOLOGY

ENERGY SAVING

APPROVED BY MELANOMA INTERNATIONAL FOUNDATION

MIF Seal of Approval

NOISE REDUCTION

DRAPER®
411 S. Pearl St. | Spiceland, IN 47385
765.987.7999 | 800.238.7999
draperinc.com

*TS - Solar Transmittance, RS - Solar Reflectance, AS - Solar Absorptance, TV - Visual Transmittance *SHGC = Solar Heat Gain Coefficient *1/4 CL = 1/4" Clear Glass, 1 HA = 1" Heat Absorbing Glass *Fabrics installed Internally, Zero-Degree Profile Angle *Solar Heat Gain Coefficient (SHGC) shown calculated according to Office of Building Technology, State and Community Programs, Energy Efficiency and Renewable Energy, U.S. Department of Energy's definition of SHGC. SHGC represents the percentage of solar heat gain that is transmitted to the interior through the glass and shading system. If you are using glass whose performance is listed in terms of SC, you may convert to SHGC by multiplying the SC by 0.87.

PHIFER INCORPORATED

® SheerWeave is a registered trademark of PHIFER INCORPORATED.
® MICROBAN is a registered trademark of Microban Products Company.
TM UL, the UL logos and the UL mark are trademarks of UL LLC.
© PHIFER INCORPORATED V19

Dual Roller FlexShade® NEXD

Premium, clutch-operated, dual roller window shade

SUBMITTAL
TECHNICAL INFO

FLEXSHADE DFXD *Please check all appropriate selections and attach room schedule with verified dimensions.*

This document is to be used with the SmallLarge NEXD Submittal. On the diagram below, please provide the following information:

Rear Roller Fabric: _____

Color / Number: _____ **Openness Factor:** _____

***Please see the Shade Fabric Reference Guide for fabric colors and specifications.**

Front Roller Fabric: _____

Color / Number: _____ **Openness Factor:** _____

***Please see the Shade Fabric Reference Guide for fabric colors and specifications.**

Please Note: Shade fabrics can be placed anywhere in the headbox. Fabric or screen can be no closer than 13/16" *(21mm)* to either end of the headbox.

Select Dual Roller Hardware *(All Hardware Dimensions available on page 2.)*

Hardware Size

- ☐ Standard Hardware
- ☐ Extra Large Hardware

STANDARD HARDWARE

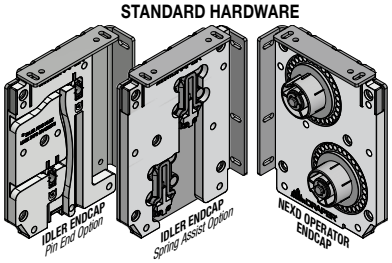

EXTRA LARGE HARDWARE

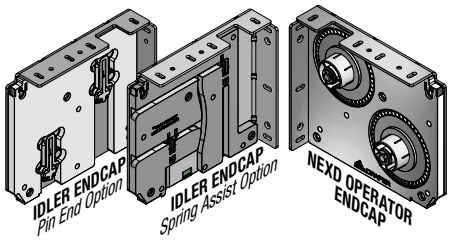

Endcaps & Fascia

- ☐ Dual Endcaps ONLY
- ☐ Dual Endcaps with Fascia

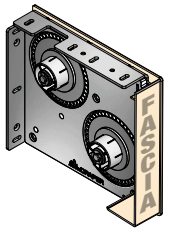

Select Headbox *(Optional)*

- ☐ Surface Headbox *(standard or extra large; sizes chosen by Draper)*
- ☐ Pocket Headbox *(standard or extra large; sizes chosen by Draper)*
  - ☐ Dual Roller Aluminum Pocket Headbox
    - ☐ Tile Flange: ☐ Front *(standard)* ☐ Back ☐ Left ☐ Right ☐ None
  - ☐ Dual Roller Steel Pocket Headbox
    - ☐ Tile Flange: ☐ Front *(standard)* ☐ Back ☐ Left ☐ Right ☐ None
    - Dual Pocket Headbox Ventilation Holes: ☐ Yes ☐ No *(standard)*
    - Pre-Drilled Shade Endcap Mounting Holes: ☐ Yes *(standard)*) ☐ No
    - Pre-Drilled Pocket Headbox Mounting Holes: ☐ Yes ☐ No *(standard)*
- ☐ Custom Headbox *(contact Draper)*

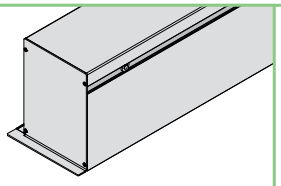

Dual Roller Aluminum Pocket Headbox
Collapsible Flat-Pack Design w/ Optional Tile Flanges

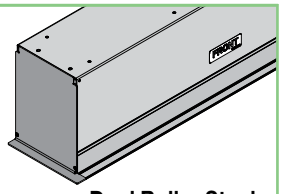

Dual Roller Steel Pocket Headbox
w/ Optional Tile Flanges and Ventilation Holes

Select Channels for Light Gap Reduction *(Optional)*

- ☐ "L" Angle
- ☐ "U" Channel
- ☐ "H" Channel
- ☐ Channel Liners

"L" Channel

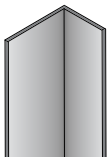

"U" Channel

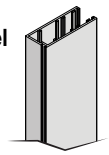

"H" Channel

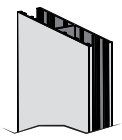

Select Hardware Finish

- ☐ Clear Anodized *(standard)*
- ☐ Black
- ☐ Ivory
- ☐ White
- ☐ Bronze
- ☐ Custom *(Contact Draper®)*

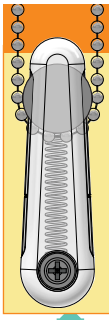

Child Safety Information

To comply with Child Safety Standard ANSI/WCMA A100.1-2022, this product ships with a clear plastic tensioning device attached to the bead chain. Incorrect installation partially disables the product. When properly fastened to mounting surface, the pre-installed Tensioner device for clutch-operated units prevents creation of a hazardous loop by maintaining tension on the bead chain.

Scan for more information, including short videos on correctly installing the tensioning device, or go to draperinc.com/windowshades/childsafety.

PROJECT: _____

_____

ARCHITECT: _____

CONTRACTOR: _____

SUPPLIER: _____

DATE: _____ **REVISED:** _____

DRAPER®

Draper, Inc. | 411 S. Pearl St. Spiceland, IN 47385
draperinc.com | 765.987.7999 | 800.238.7999

© 2025 All Rights Reserved

FORM: FS_NEXD_Dual_Roller_Sub25

MADE IN USA WITH AMERICAN & GLOBAL COMPONENTS

Dual Roller FlexShade® NEXD

Standard Hardware Components

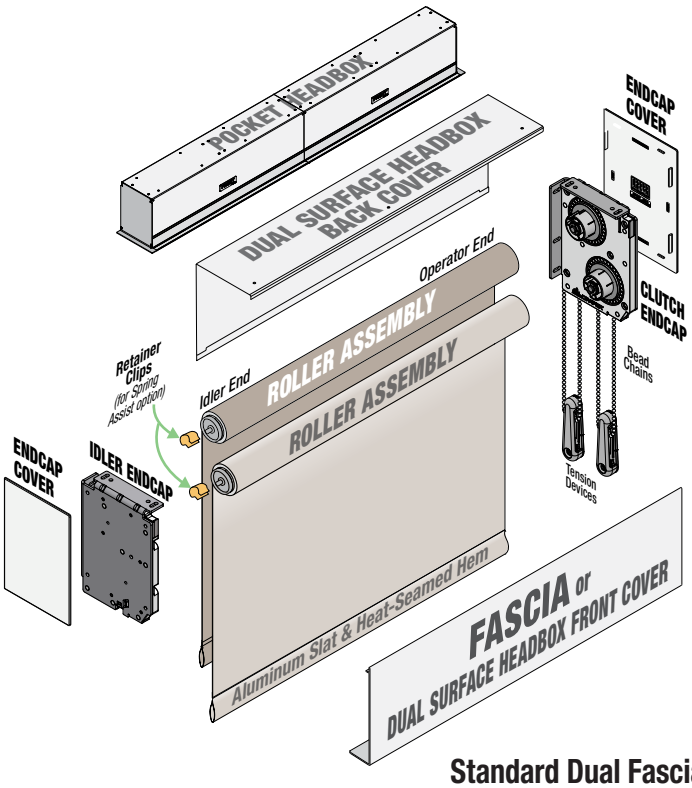

DUAL ROLLER STANDARD HARDWARE FLEXSHADE NEXD SPECIFICATIONS:
Two rollers mounted to a single set of endcaps, to accept fascia.

COMPONENTS SPECIFIC TO CLUTCH-OPERATED DUAL ROLLER

ENDCAPS: 1028 steel stamping. Complete with adapter roller bracket. Installs to wall or ceiling. Shades mount in vertical configuration *(see drawings)*. Accepts Dual Roller Fascia.

DUAL FASCIA *(FOR ENDCAPS)*: L-shaped cover of extruded aluminum, .060" *(1.5mm)* wall. Assembly snaps onto endcaps without exposed fasteners. Clear Anodized *(standard)*, black, white, ivory, or bronze powder coat finish available.

DUAL ROLLER POCKET STYLE HEADBOX: Headbox of 18 GA Steel, painted white on bottom and front, with or without aluminum ceiling tile lip. Removable aluminum bottom closure attaches without exposed fasteners.

Downloadable 3-part specifications are available at www.draperinc.com

Please note: Dimensions of rollers, operators, and hardware at manufacturer's discretion.

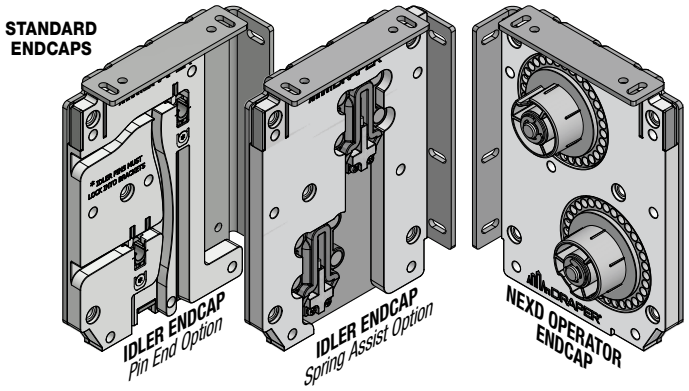

Standard Dual Fascia

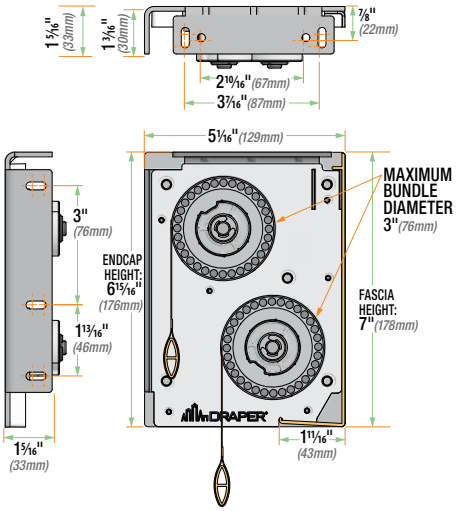

Standard Dual Surface Headbox

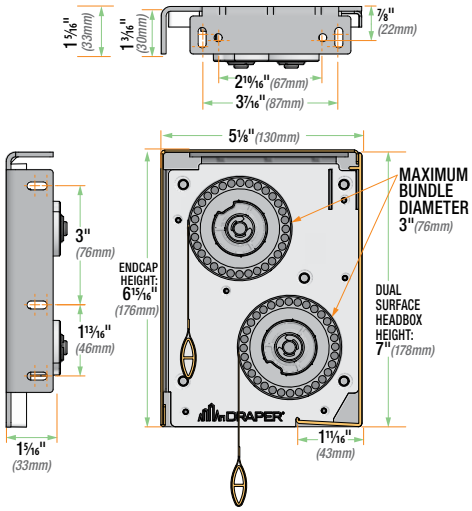

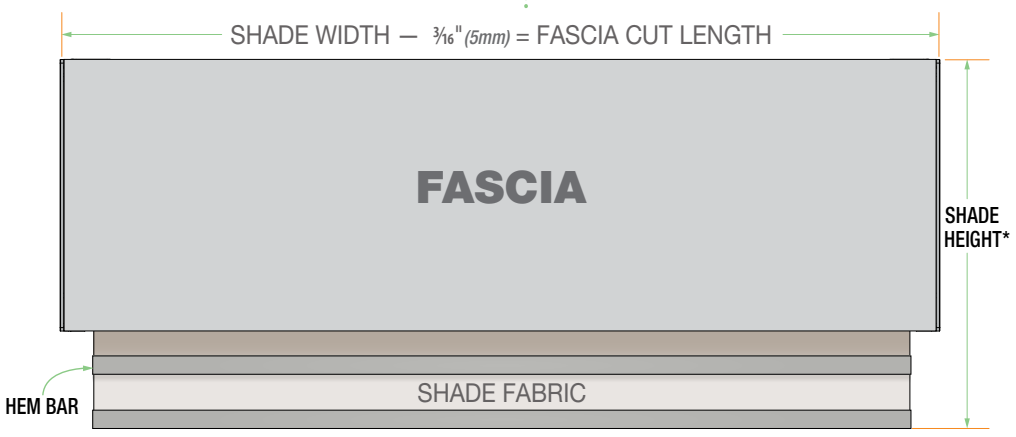

ROLLER TUBE CUT LENGTH – ⅛" *(3.2mm)* = FABRIC CUT WIDTH
SHADE WIDTH *(Outside Measurement)* – 1½" *(38mm)* = ROLLER TUBE CUT LENGTH
FABRIC CUT WIDTH – 2" *(51mm)* = HEM BAR CUT LENGTH

**When measuring shade height, remember to include Endcaps & Fascia.*

Dual Roller FlexShade® NEXD

Extra Large Hardware Components

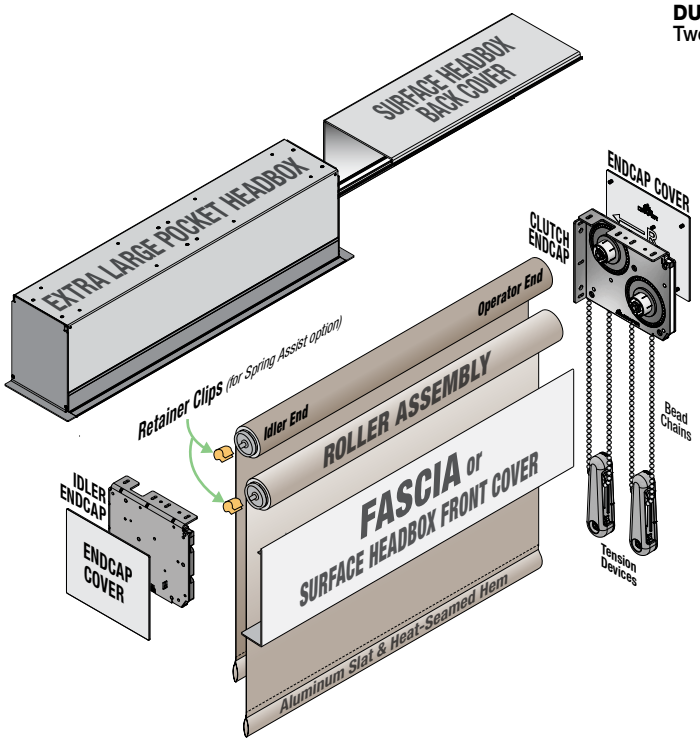

DUAL ROLLER EXTRA LARGE HARDWARE FLEXSHADE NEXD SPECIFICATIONS:
Two rollers mounted to a single set of endcaps, to accept fascia.

COMPONENTS SPECIFIC TO CLUTCH-OPERATED DUAL ROLLER

ENDCAPS: 1028 steel stamping. Complete with adapter roller bracket. Installs to wall or ceiling. Shades mount in vertical configuration *(see drawings)*. Accepts Dual Roller Fascia.

DUAL FASCIA *(FOR ENDCAPS)*: L-shaped cover of extruded aluminum, .060" *(1.5mm)* wall. Assembly snaps onto endcaps without exposed fasteners. Clear Anodized *(standard)*, black, white, ivory, or bronze powder coat finish available.

DUAL ROLLER POCKET STYLE HEADBOX: Headbox of 18 GA Steel, painted white on bottom and front, with or without aluminum ceiling tile lip. Removable aluminum bottom closure attaches without exposed fasteners.

Downloadable 3-part specifications are available at www.draperinc.com

Please note: Dimensions of rollers, operators, and hardware at manufacturer's discretion.

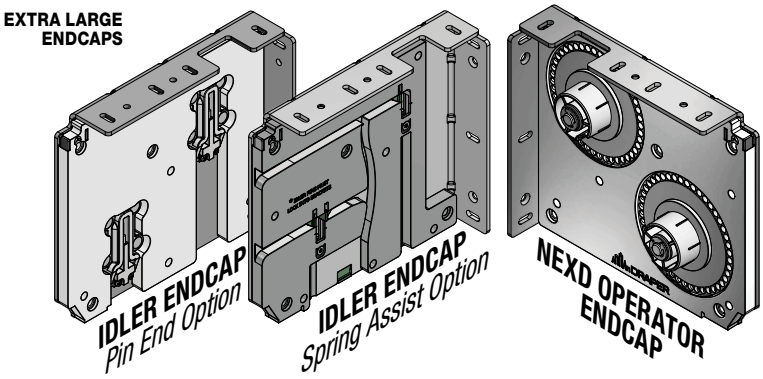

Extra Large Dual Fascia

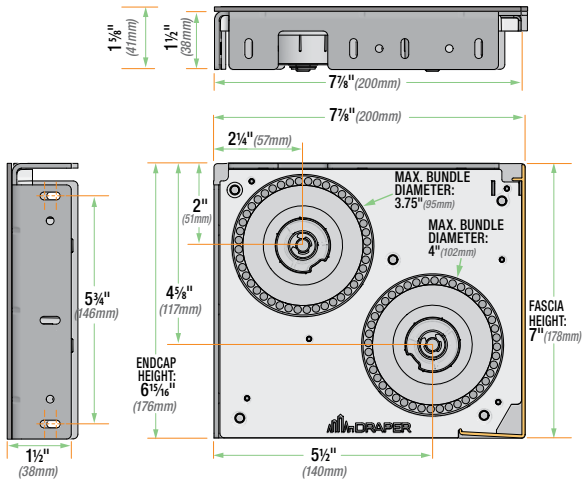

Extra Large Dual Surface Headbox

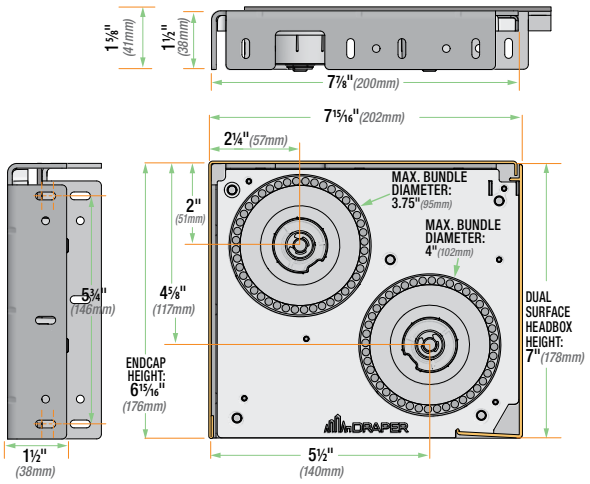

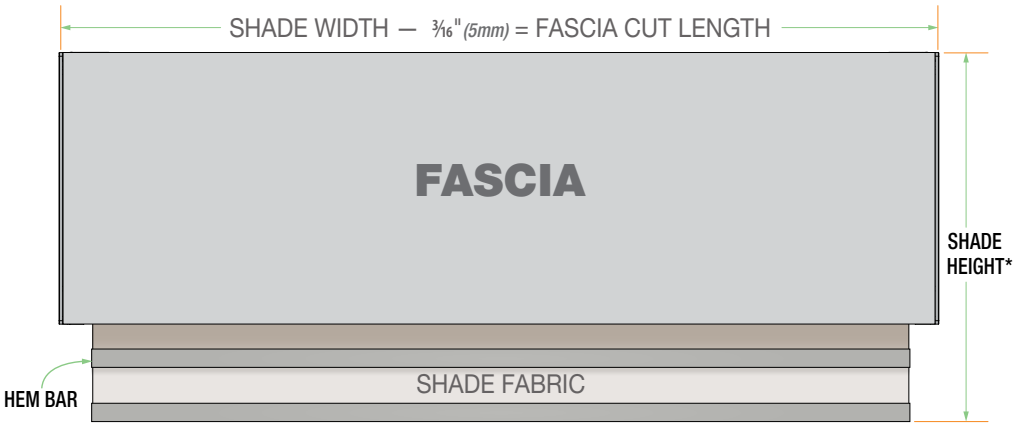

ROLLER TUBE CUT LENGTH – ⅛" *(3.2mm)* = FABRIC CUT WIDTH
SHADE WIDTH *(Outside Measurement)* – 1½" *(38mm)* = ROLLER TUBE CUT LENGTH
FABRIC CUT WIDTH – 2" *(51mm)* = HEM BAR CUT LENGTH

**When measuring shade height, remember to include Endcaps & Fascia.*

Dual Roller FlexShade® NEXD

Dimensions: Pocket Headbox

Standard Hardware
Steel Pocket Headbox

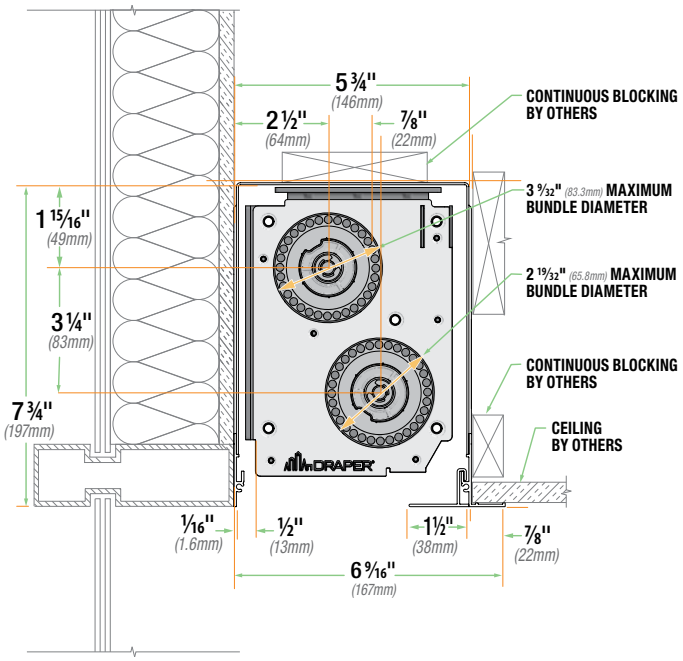

Standard Hardware
Aluminum Pocket Headbox

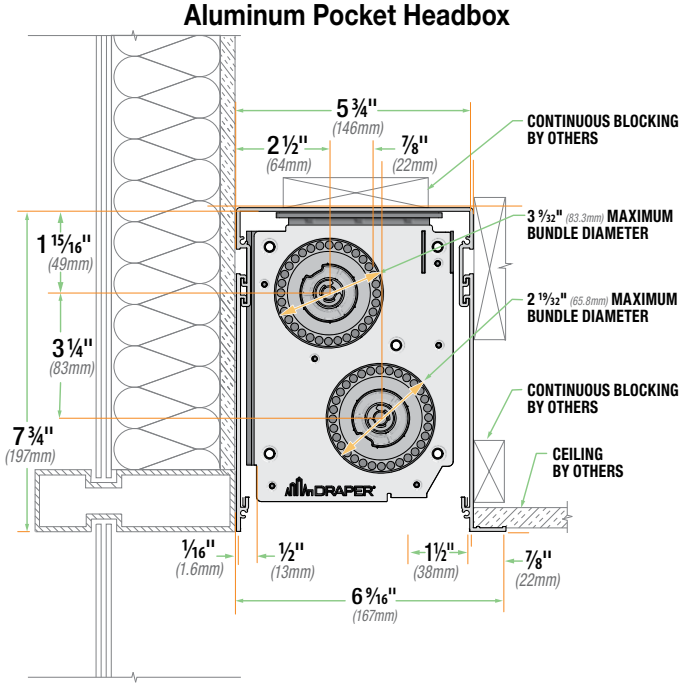

Extra Large Hardware

